PLANS FOR CONSTRUCTION

OF

WATER PLANT NO. 3

FOR

WEST HOUSTON MUNICIPAL UTILITY DISTRICT

HARRIS COUNTY, TEXAS

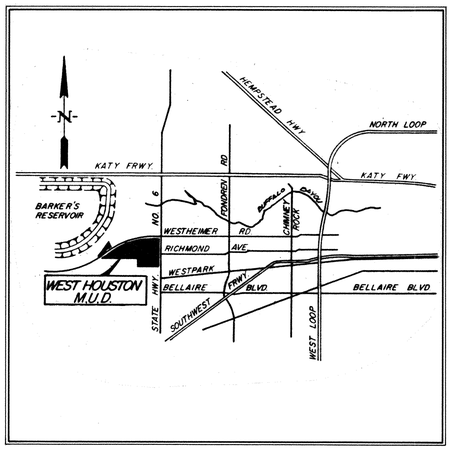

KEY MAP
NOT TO SCALE

JUNE , 1982

Lockwood, Andrews & Newnam, Inc.
Engineering • Architecture • Planning • Project Management

INDEX TO DRAWINGS

DRAWING No.	DESCRIPTION
1	HYDRAULIC SCHEMATIC
2	PLANT LAYOUT
3	BOOSTER PUMP AND WELL DETAILS
4	GROUND STORAGE TANK DETAILS
5	GROUND STORAGE TANK AND MISCELLANEOUS DETAILS
6	HYDROPNEUMATIC TANK DETAILS
7	MISCELLANEOUS DETAILS
8	MISCELLANEOUS DETAILS
9	PROPOSED DRAINAGE
10	BOOSTER PUMP AND CONTROL ROOM PLANS AND DETAILS
11	ELECTRICAL SITE PLAN AND DETAILS
12	ONE LINE DIAGRAM AND SCHEDULES
13	BUILDING, POWER AND LIGHTING LAYOUTS AND DETAILS

W.P. 0238

LEGEND

- PI — PRESSURE INDICATOR OR PRESSURE GAUGE
- FS — FLOW SWITCH
- FI — FLOW INDICATOR OR FLOW METER
- RV — PRESSURE RELIEF VALVE
- AD — AIR DUMP VALVE
- PLUG
- NO — NORMALLY OPEN
- NC — NORMALLY CLOSED
- GATE VALVE
- ELECTRICAL SOLENOID VALVE
- AIR RELIEF VALVE
- CHECK VALVE
- DIRECTION OF FLOW
- INLINE REDUCER
- BUTTERFLY VALVE
- SELF-CONTAINED PRESSURE CONTROL VALVE
- GLOBE VALVE

STORAGE TANK LEVELS

A. OVERFLOW AND HIGH LEVEL-PROBE LEVEL
B. STOP WELL PUMP-PROBE LEVEL
C. START WELL PUMP
D. RESET LOW LEVEL ALARM
E. LOW LEVEL (AUTO-VISUAL ALARM ONLY)
F. RESTORE AUTO OPERATION (RESTORE BOOSTER PUMPS ON AUTO/MANUAL OPERATION)
G. EXTREME LOW LEVEL (STOP ALL BOOSTER PUMPS ON AUTO/MANUAL OPERATION)

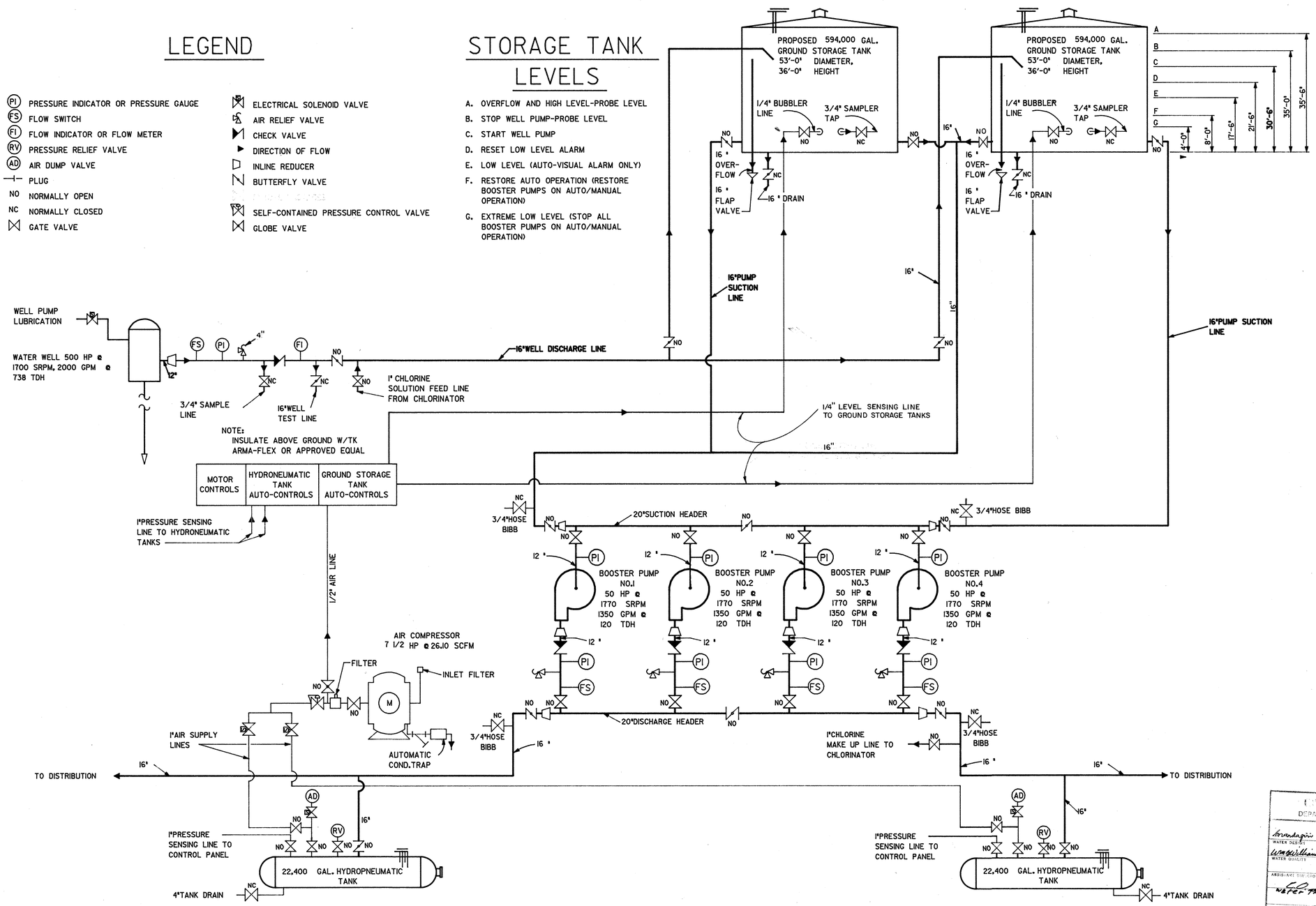

CITY OF HOUSTON
DEPARTMENT OF PUBLIC WORKS
APPROVALS
WATER DES. — 6-24-82
WATER QUALITY — Wm Williams 6-24-82
PAVING DEPT. — 6-28-82
BOOSTER SUPVRS.
ASSISTANT DIRECTOR - WATER DIV. — Water Production
SANITARY SEWERS
CHIEF ENG. - SEWER DIV.
OTHER DEPTS. — 7-19-82
TRAFFIC & TRANSPORTATION DEPT. — Randall Riley
PLANNING
ASST. DIRECTOR OF PUBLIC WORKS
DIRECTOR OF PUBLIC WORKS

No.	Date	Revisions	App.

Lockwood, Andrews & Newnam, Inc.
Engineering-Architecture-Planning-Project Management

STATE OF TEXAS — CHARLES R. NEELY — 48126 — REGISTERED PROFESSIONAL ENGINEER

WATER PLANT No. 3

WEST HOUSTON MUNICIPAL UTILITY DISTRICT
WEST OAKS PLAZA, SECTION ONE
HARRIS COUNTY, TEXAS

HYDRAULIC SCHEMATIC

Scale: NONE
Date: JUNE, 1982
Designed by:
Drawn by:
Checked by:
Approved by:
Project No. 1570-20-001-000

Sheet 1 of 13

W.P. 0238

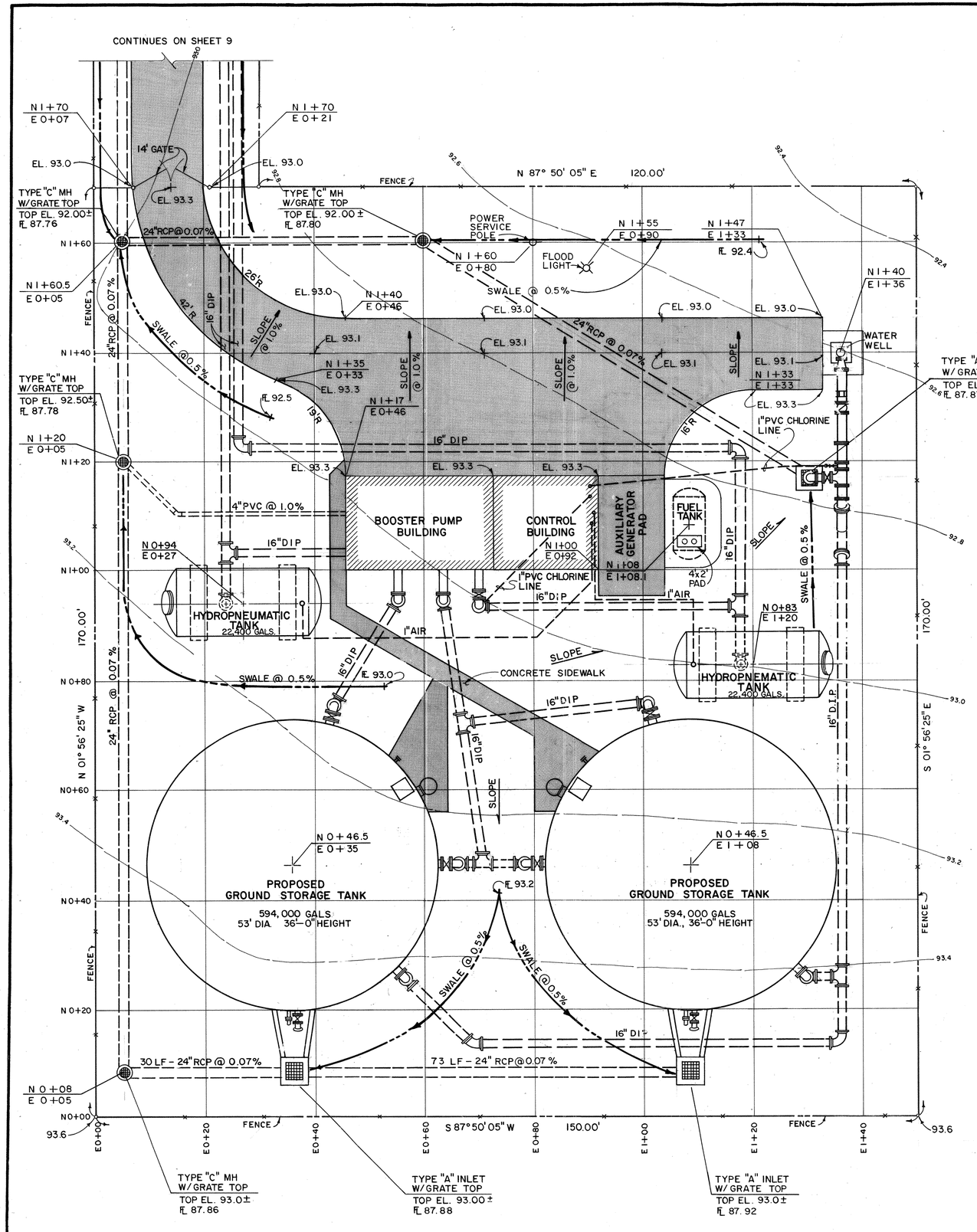

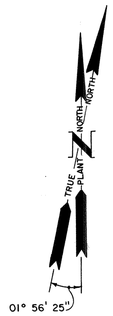

GENERAL NOTES

A. CONCRETE:

1. ALL CONCRETE SHALL HAVE A MINIMUM OF 4000 PSI COMPRESSIVE STRENGTH AT 28 DAYS.
2. CONCRETE SHALL BE MIXED, TRANSPORTED, PLACED, COMPACTED AND CURED IN STRICT ACCORDANCE WITH ALL PERTINENT A.C.I. SPECIFICATIONS AND STANDARDS, INCLUDING "BUILDING CODE REQUIREMENTS FOR REINFORCED CONCRETE".

B. REINFORCING:

ALL REINFORCING STEEL SHALL BE ASTM A615, GRADE 60 OR GRADE 40 AS PER SPECIFICATIONS, DESIGN, FABRICATE AND ERECT IN STRICT ACCORDANCE WITH A.C.I. AND C.R.S.I. STANDARDS AND SPECIFICATIONS.

C. STEEL:

ALL STEEL SHALL BE ASTM A36. DESIGN, FABRICATE AND ERECT IN STRICT ACCORDANCE WITH SPECIFICATIONS, STANDARDS, AND RECOMMENDATIONS OF THE AMERICAN INSTITUTE OF STEEL CONSTRUCTION (A.I.S.C.).

D. DIMENSIONS:

ALL DIMENSIONS SHALL BE VERIFIED BEFORE COMMENCING WORK. IT SHALL BE CONTRACTORS' RESPONSIBILITY TO REPORT ANY DISCREPANCIES TO ENGINEER IN A TIMELY MANNER.

E. STORM SEWERS:

REFER TO THE LATEST EDITION OF "SPECIFICATIONS FOR SEWER CONSTRUCTION", FORM E-14-62 OF THE DEPARTMENT OF PUBLIC HEALTH, CITY OF HOUSTON AND ALL APPLICABLE AMENDMENTS FOR STORM SEWER INLET AND MANHOLE DETAIL.

F. FENCE:

6 FT. CHAIN LINK FENCE W/ 1 THREE-STRAND BARBED WIRE TOP TO ENCLOSE WATER PLANT SITE, AS PER SPECIFICATIONS.

G. FLOOD PLAN:

100 YEAR FLOOD ELEVATION 82' M.S.L. REFERENCE U.S.G.S. MAP OF FLOOD PRONE AREAS.

H. BENCHMARK:

"LL" ON F.V. AT SOUTHWEST CORNER OF THE INTERSECTION OF TEXAS STATE HWY. NO. 6 AND WESTHOLLOW DRIVE, ELEV. = 91.84 (1964 DATUM), ELEV. = 90.48 (1973 ADJUSTED DATUM).

I. ELEVATIONS:

PLAN ELEVATIONS ARE BASED ON 1964 U.S.C. & G.S. DATUM. AFTER VERIFICATION OF ELEVATIONS FOR THE EXISTING STORM AND WATER LINES, ADJUST ALL PIPE ELEVATIONS ACCORDINGLY.

J. COMPACTION AT TANKS

SOIL IS TO BE SELECT FILL, PLACE IN LAYERS OF NO MORE THAN NINE INCHES AND COMPACT TO 95% OF MODIFIED PROCTOR DENSITY PER ASTM D-1557 WITH 2% OPTIMUM MOISTURE CONTENT.

K. PLANT GRID N0+00, E0+00 EQUALS SHOPPING CENTER COORDINATES N6355.82, E7402.02, PLANT NORTH IS N01°56' 25"W, FEDERATED SHOPPING CENTER NORTH IS N02°16'32"W.

L. CONTRACTOR IS TO SUBMIT PAVEMENT JOINT LAYOUT FOR THE ACCESS ROAD PRIOR TO CONSTRUCTION.

M. ALL PIPE FITTINGS ABOVE GROUND SHALL BE FLANGED, BELOW GROUND PUSH ON FITTINGS SHALL BE USED.

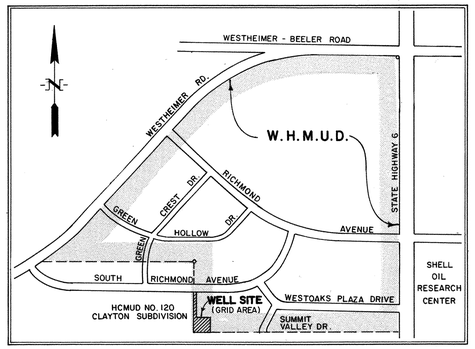

LOCATION MAP
NOT TO SCALE

CITY OF HOUSTON
DEPARTMENT OF PUBLIC WORKS

APPROVALS

WATER DESIGN — Brandagin 6-24-82
PAVING DEPT. — Stu Delany 7-6-82
WATER QUALITY — Wm G Williams 6-21-82
STORM SEWERS
ASSISTANT DIR. & CHIEF - WATER DIV. — Walter Prescott
SANITARY SEWERS
CHIEF ENG. - SEWER DIV.

OTHER DEPT'S. 7-19-82

TRAFFIC & TRANSPORTATION DEPT. — Randall Riley
CITY PLANNING DEPT.
WEST DIRECTOR OF PUBLIC WORKS
DIRECTOR OF PUBLIC WORKS

No.	Date	Revisions	App.

Lockwood, Andrews & Newnam, Inc.
Engineering·Architecture·Planning·Project Management

REGISTERED PROFESSIONAL ENGINEER CHARLES B. MIDDLEY 48166 STATE OF TEXAS

WATER PLANT No. 3

WEST HOUSTON MUNICIPAL UTILITY DISTRICT
WEST OAKS PLAZA, SECTION ONE
HARRIS COUNTY, TEXAS

PLANT LAYOUT

Scale: 1" = 10'
Date: JUNE, 1982
Designed by: Alan Boyer
Drawn by: Joe G. Zangy
Checked by: C B Middley
Approved by:
Project No. 1570-20-001-000

Sheet 2 of 13

W.P. 0238

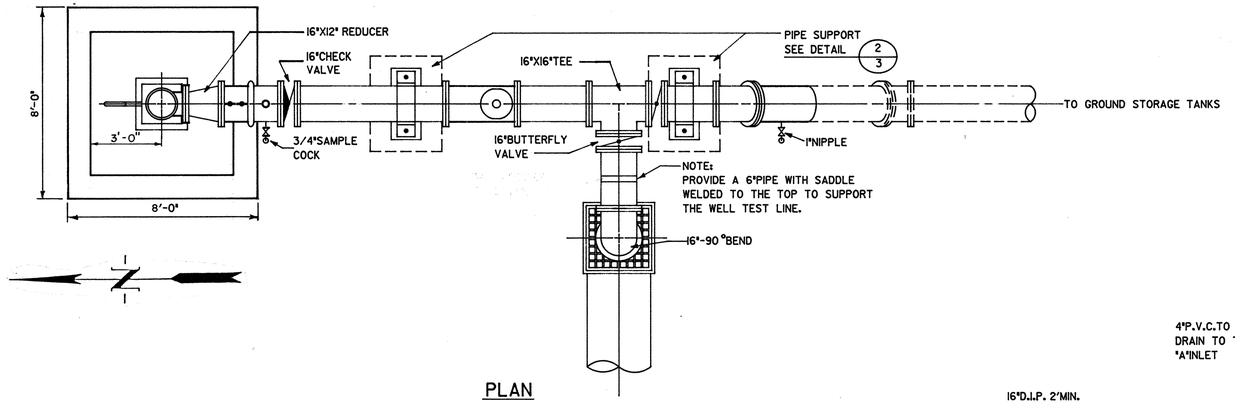

PLAN

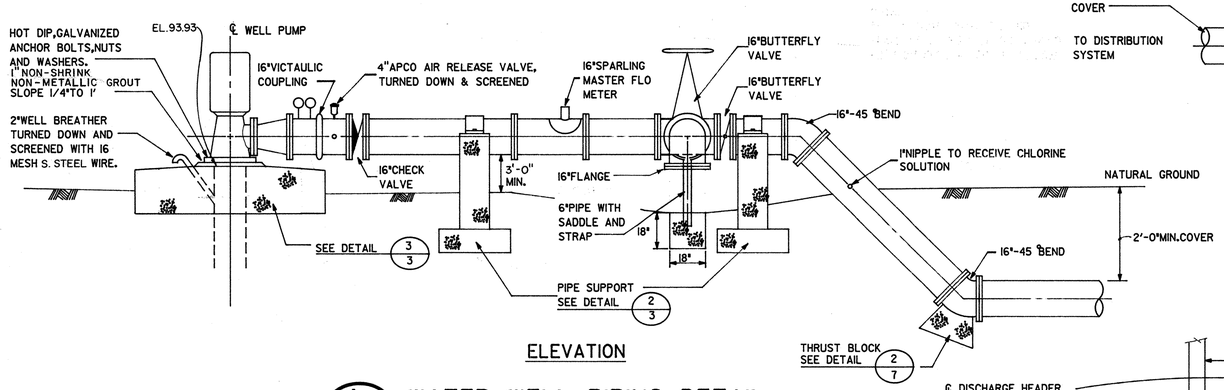

ELEVATION

1/3 WATER WELL PIPING DETAIL

1"=3'-0"

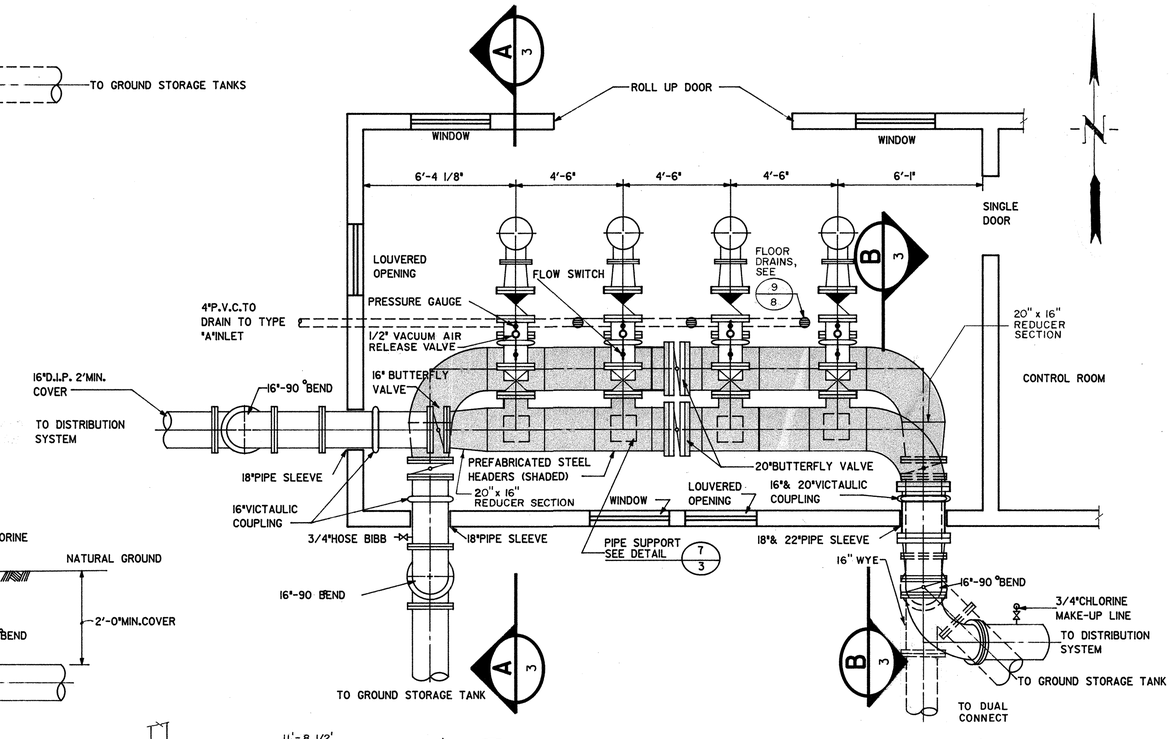

4/3 BOOSTER PUMPS - PLAN

1"=3'-0"

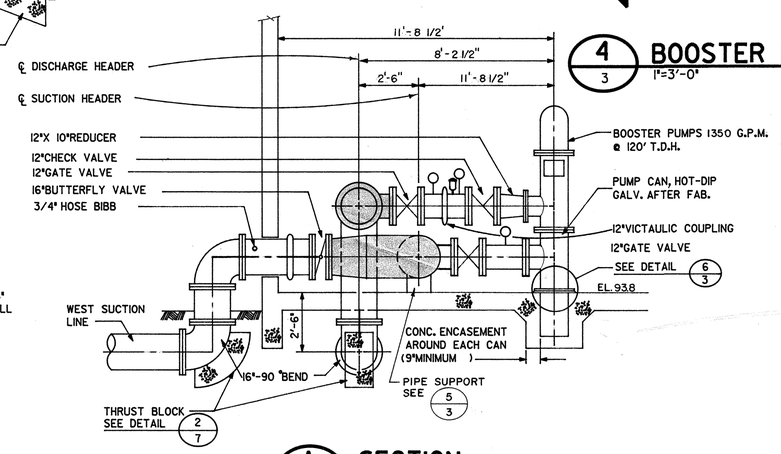

A/3 SECTION

1"=3'-0"

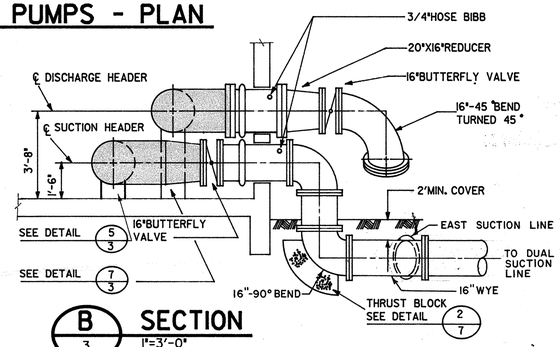

B/3 SECTION

1"=3'-0"

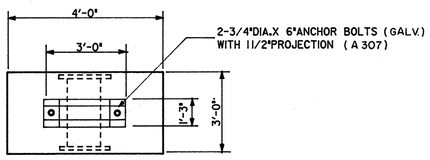

PLAN

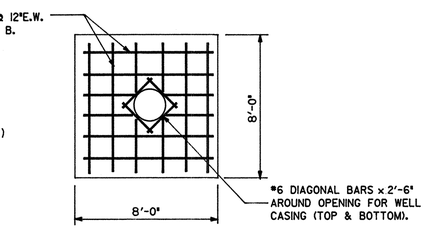

PLAN

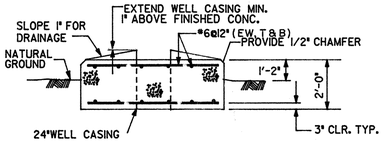

ELEVATION

3/3 WELL PUMP FOUNDATION DETAIL

N.T.S.

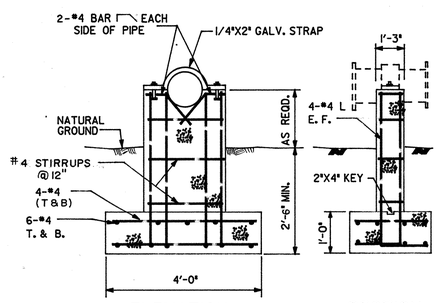

ELEVATION SECTION

2/3 PIPE SUPPORT DETAIL

N.T.S.

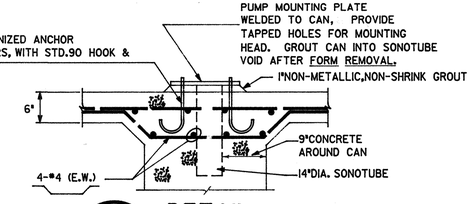

6/3 DETAIL

N.T.S.

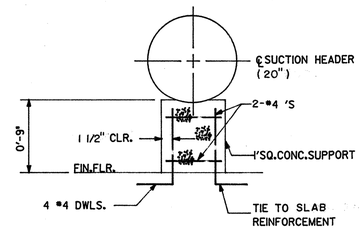

5/3 SUCTION HEADER PIPE SUPPORT(TYP.)

N.T.S. (4 REQ'D)

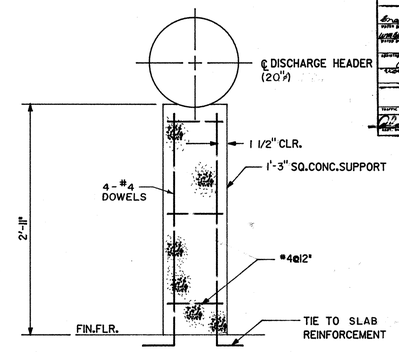

7/3 DISCHARGE HEADER PIPE SUPPORT(TYP.)

N.T.S. (4 REQ'D.)

CITY OF HOUSTON
DEPARTMENT OF PUBLIC WORKS
APPROVALS
OTHER DEPTS.

No.	Date	Revisions	App.

Lockwood, Andrews & Newnam, Inc.
Engineering-Architecture-Planning-Project Management

STATE OF TEXAS — CHARLES R. NEELEY — 48126 — REGISTERED PROFESSIONAL ENGINEER

WATER PLANT No. 3

WEST HOUSTON MUNICIPAL UTILITY DISTRICT
WEST OAKS PLAZA, SECTION ONE
HARRIS COUNTY, TEXAS

BOOSTER PUMP AND WELL DETAILS

Scale: AS SHOWN Date: JUNE,1982
Designed by: Ron Gage
Drawn by: Guy Gregston
Checked by: C. R. Neeley
Approved by:
Project No. 1570-20-001-000

Sheet 3 of 13

W.P. 0238

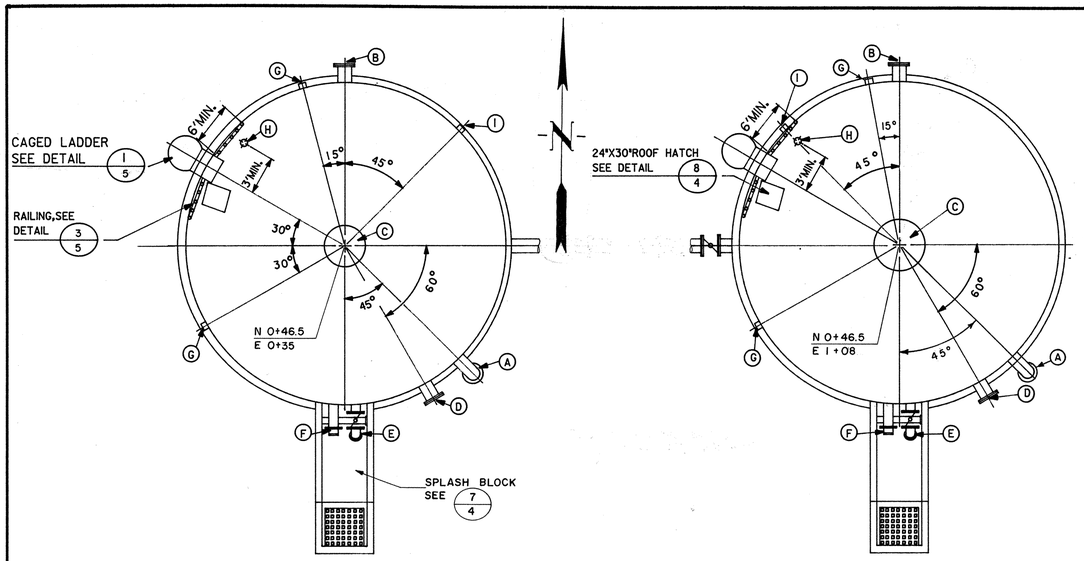

1/4 STORAGE TANK ORIENTATION
NOT TO SCALE

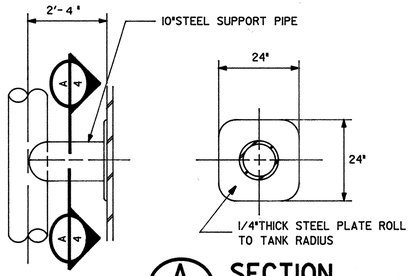

2/4 PIPE SUPPORT DETAIL
NOT TO SCALE

A/4 SECTION
NOT TO SCALE

STORAGE TANK OUTLET SCHEDULE						
ROTATION	NO. REQUIRED	SIZE	FITTING	℄ ELEV. ABOVE TANK BOTTOM	SERVICE	DETAIL
A	1	16"	P.E.	35'-0"	INLET	1/4
B	1	16"	FLG.	3'-0"	OUTLET	1/4
C	1	24"	—	℄ ROOF	VENT	1/4
D	1	24"	FLG.	3'-0"	MANWAY	1/4
E	1	16"	FLG.	0	DRAIN	1/4
F	1	16"	F.E.	AS REQ'D.	OVER-FLOW	1/4
G	2	3/4"	CPG.	3'-0"	SAMPLE TAP	—
H	1	3"	CPG.	ROOF	PROBES	—
I	1	1/2"	CPG.	2'-0"	LEVEL IND.	1/4

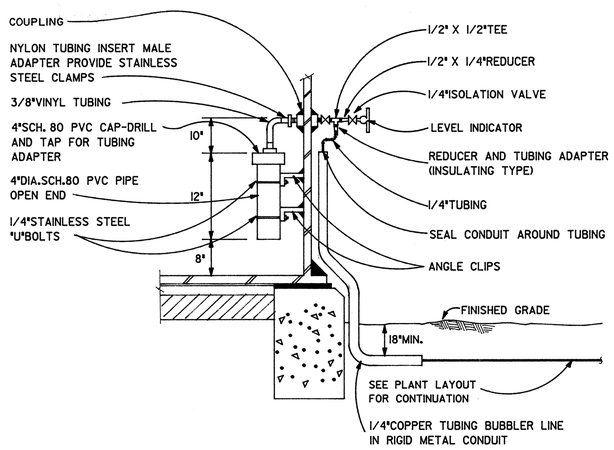

3/4 BUBBLER TUBE AND G.S.T. LEVEL INDICATOR CONNECTION DETAIL
NOT TO SCALE

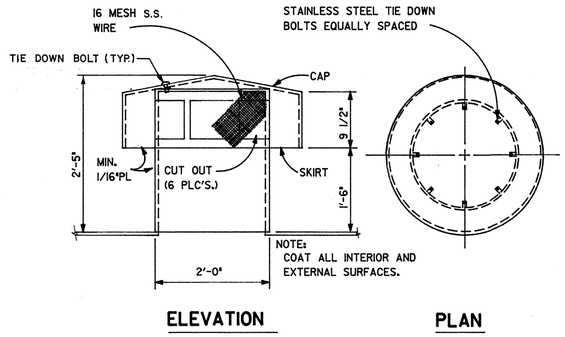

4/4 SCREEN ROOF VENT DETAIL
NOT TO SCALE

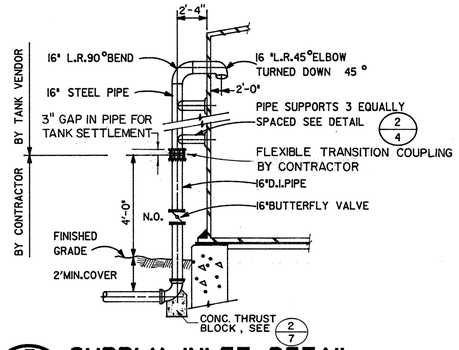

5/4 SUPPLY INLET DETAIL
NOT TO SCALE

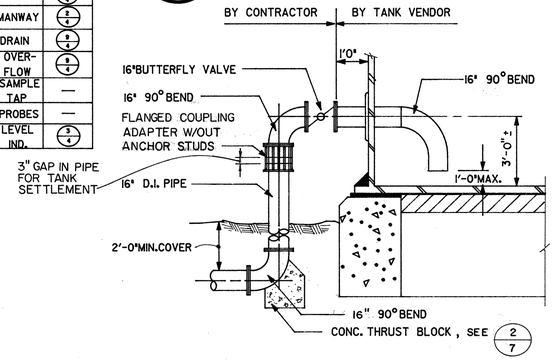

6/4 SUCTION LINE OUTLET DETAIL
NOT TO SCALE

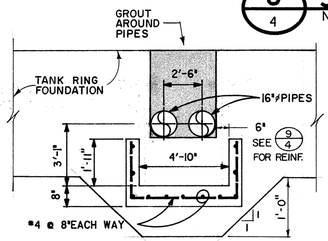

B/4 SECTION
NOT TO SCALE

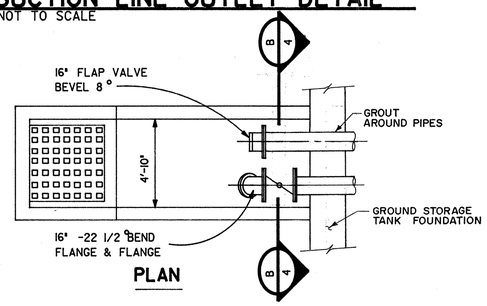

7/4 SPLASH BLOCK DETAIL
NOT TO SCALE

*NOTE: POUR SPLASH BLOCK AFTER TANK WATER TEST

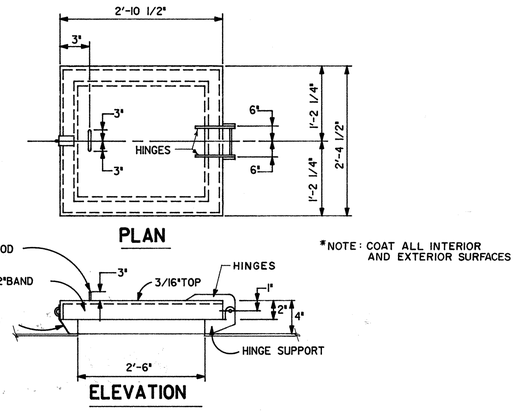

*NOTE: COAT ALL INTERIOR AND EXTERIOR SURFACES

8/4 ROOF HATCH DETAIL
NOT TO SCALE

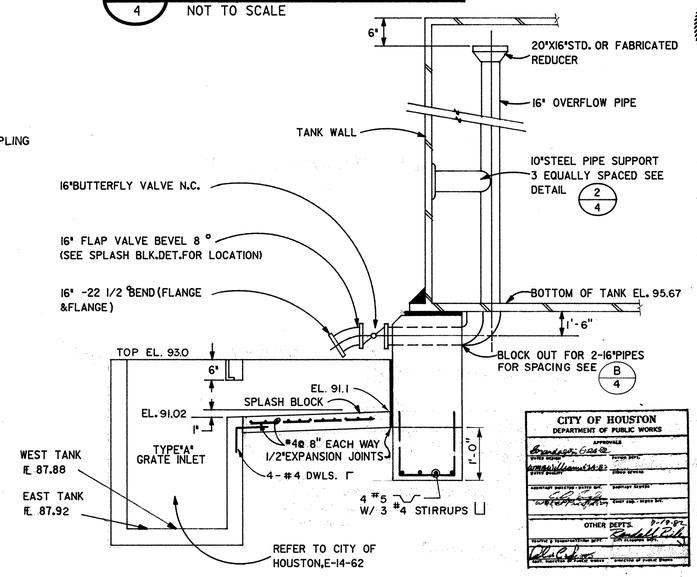

CITY OF HOUSTON
DEPARTMENT OF PUBLIC WORKS
APPROVALS
OTHER DEPTS.

9/4 OVERFLOW AND DRAIN PIPES
NOT TO SCALE

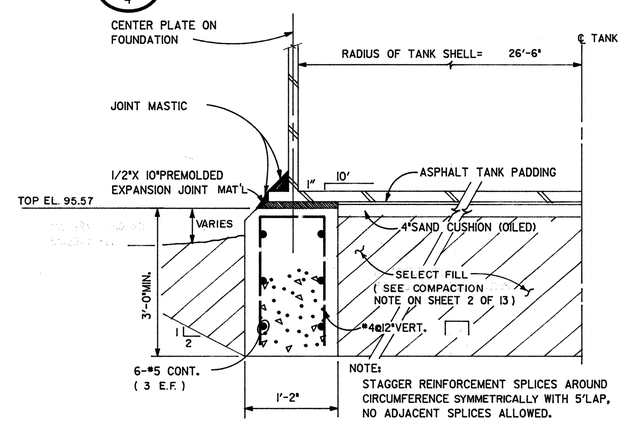

NOTE:
STAGGER REINFORCEMENT SPLICES AROUND CIRCUMFERENCE SYMMETRICALLY WITH 5' LAP, NO ADJACENT SPLICES ALLOWED.

10/4 GROUND STORAGE TANK FOUNDATION DETAIL
NOT TO SCALE

No.	Date	Revisions	App.

Lockwood, Andrews & Newnam, Inc.
Engineering-Architecture-Planning-Project Management

STATE OF TEXAS — CHARLES B. NIELSEN — REGISTERED PROFESSIONAL ENGINEER — 48126

WATER PLANT No. 3
WEST HOUSTON MUNICIPAL UTILITY DISTRICT
WEST OAKS PLAZA, SECTION ONE
HARRIS COUNTY, TEXAS

GROUND STORAGE TANK DETAILS

Scale: NONE | Date: JUNE, 1982
Designed by: Ron Sup
Drawn by: Gary Sugerstein
Checked by: CS Nielsen
Approved by:
Project No. 1570-20-001-000

Sheet 4 of 13

W.P. 0238

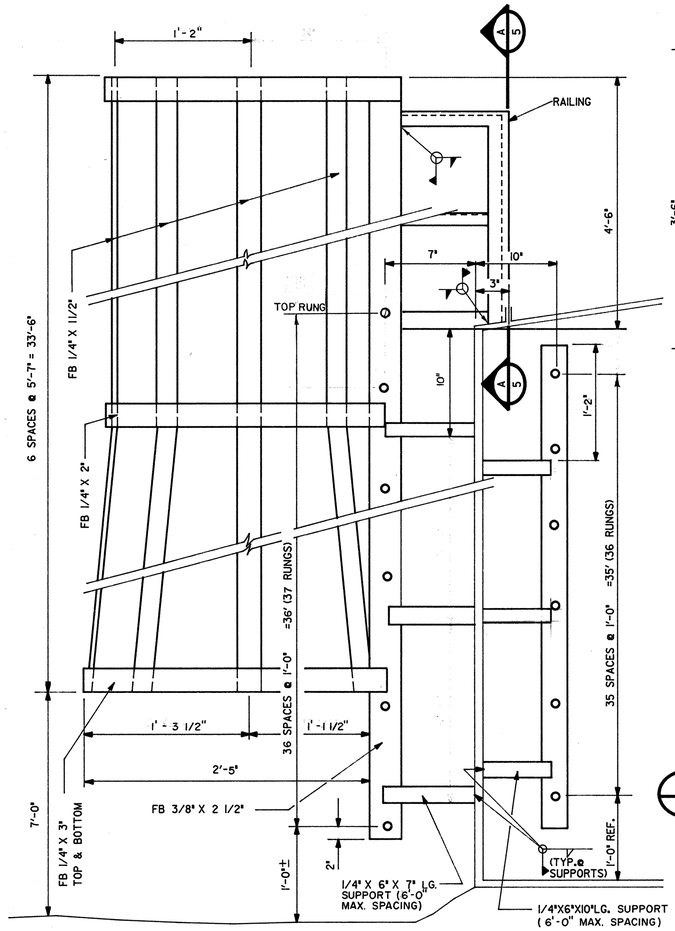

NOTE: HOT DIP GALV. LADDER, CAGE, & HANDRAIL AFTER FABRICATION.

1/5 STANDARD CAGED LADDER DETAIL
NOT TO SCALE

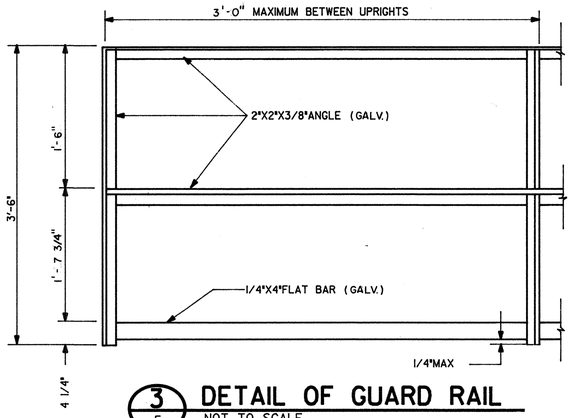

3/5 DETAIL OF GUARD RAIL
NOT TO SCALE

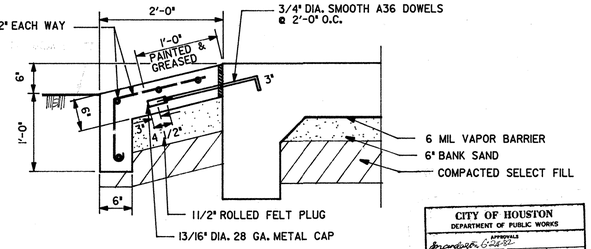

7/5 SECTION OF RAMP
NOT TO SCALE

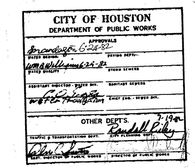

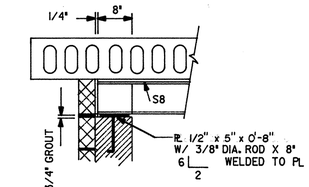

11/5 DETAIL
NOT TO SCALE

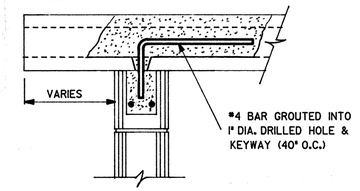

12/5 DETAIL
NOT TO SCALE

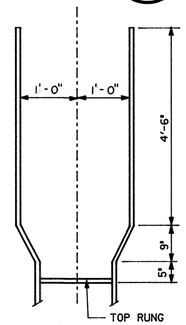

A/5 SECTION
NOT TO SCALE

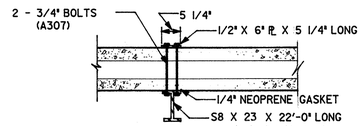

4/5 ATTACHMENT OF RUNWAY BEAM TO ROOF
NOT TO SCALE

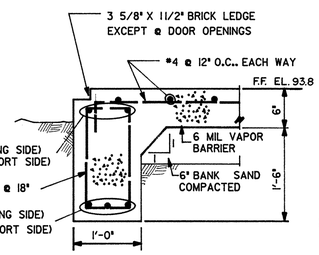

5/5 DETAIL
NOT TO SCALE

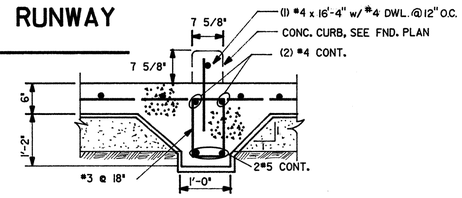

9/5 DETAIL
NOT TO SCALE

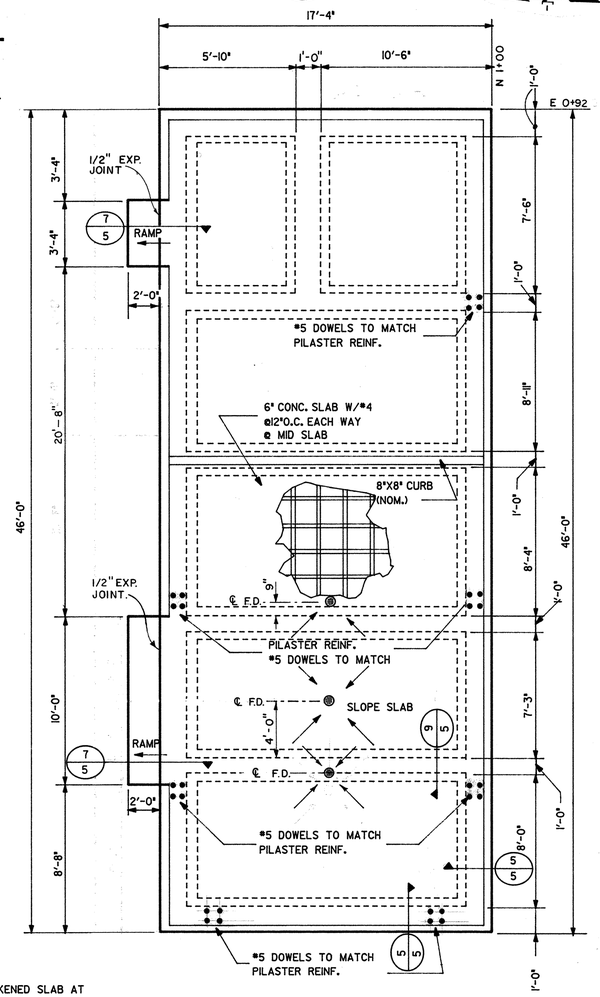

13/5 FOUNDATION PLAN
NOT TO SCALE

NOTE:
1. FOR THICKENED SLAB AT BOOSTER PUMP MOUNTING PLATE SEE DETAIL 6/3
2. FOR FLOOR DRAIN, SEE DETAIL 9/8

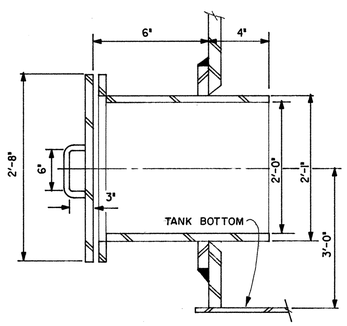

2/5 MANWAY DETAIL
NOT TO SCALE

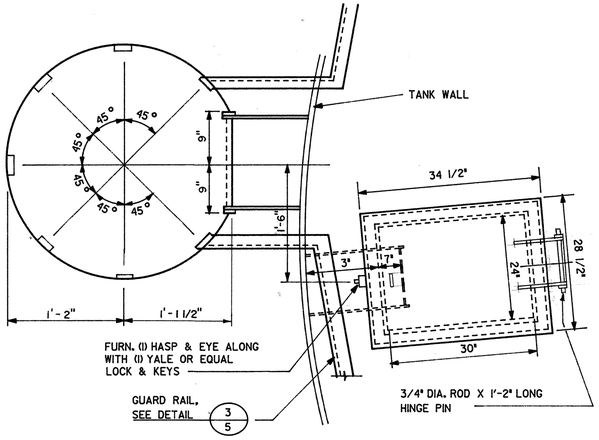

6/5 WALKWAY DETAIL
NOT TO SCALE

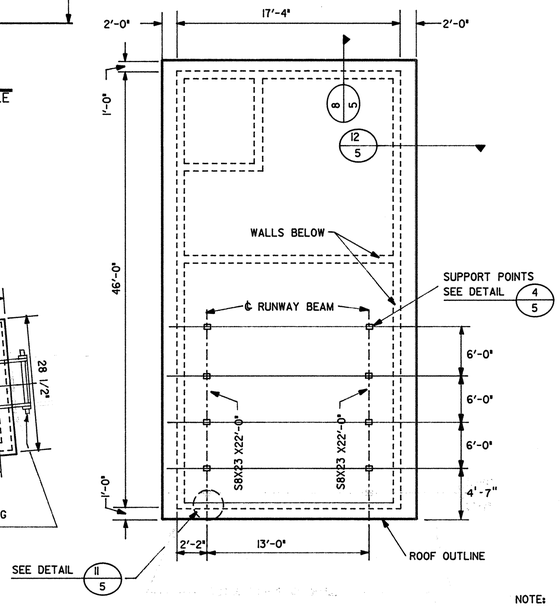

10/5 RUNWAY BEAM PLAN
NOT TO SCALE

No.	Date	Revisions	App.

Lockwood, Andrews & Newnam, Inc.
Engineering-Architecture-Planning-Project Management

STATE OF TEXAS — CHARLES R. MIDDLETON — 48184 — REGISTERED PROFESSIONAL ENGINEER

WATER PLANT No. 3

WEST HOUSTON MUNICIPAL UTILITY DISTRICT
WEST OAKS PLAZA, SECTION ONE
HARRIS COUNTY, TEXAS

GROUND STORAGE TANK AND MISCELLANEOUS DETAILS

Scale: NONE | Date: JUNE, 1982
Designed by: Ron Bass
Drawn by: Gary Gonzales
Checked by: Charles Middleton
Approved by:
Project No. 1570-20-001-000

Sheet 5 of 13

W.P. 0238

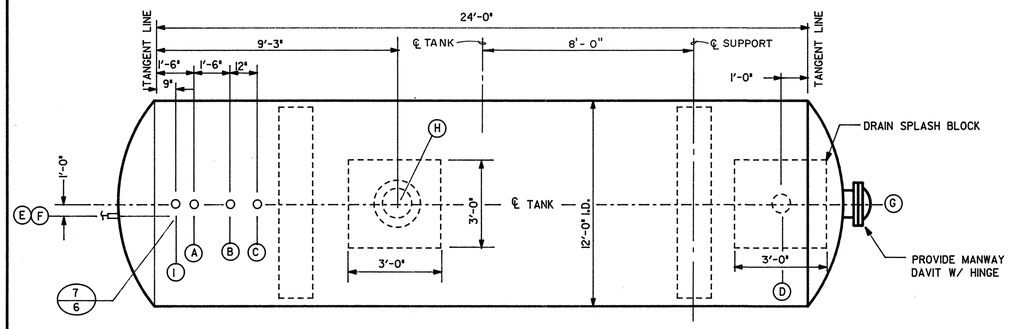

1/6 PLAN
NOT TO SCALE

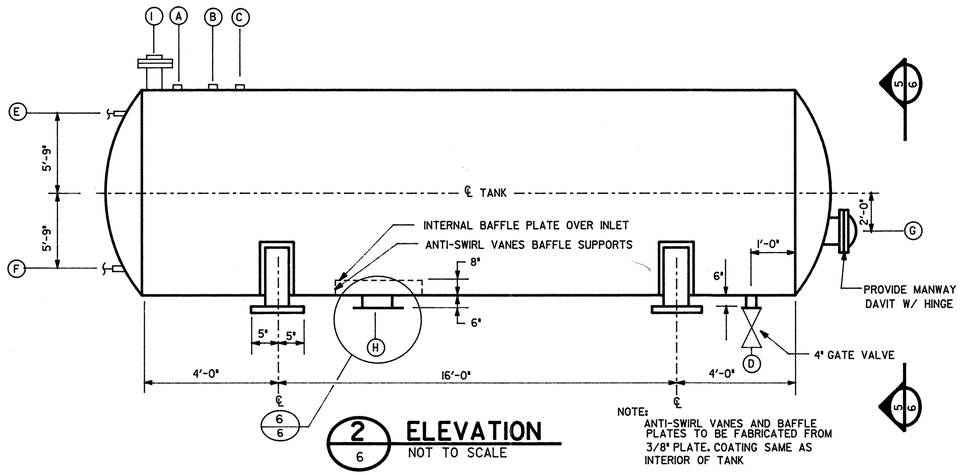

2/6 ELEVATION
NOT TO SCALE

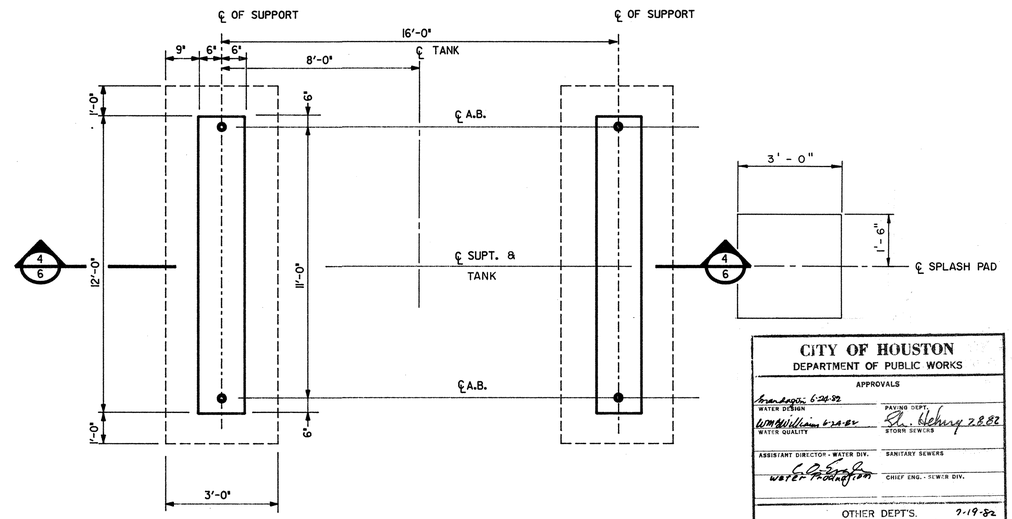

3/6 HYDROPNUEMATIC TANK FOUNDATION PLAN
NOT TO SCALE

CITY OF HOUSTON
DEPARTMENT OF PUBLIC WORKS
APPROVALS
WATER DIVISION — WATER QUALITY — PAVING DEPT. — STORM SEWERS
ASSISTANT DIRECTOR - WATER DIV. — SANITARY SEWERS
CHIEF ENG. - SEWER DIV.
OTHER DEPT'S.
TRAFFIC & TRANSPORTATION DEPT. — CITY PLANNING DEPT.
ASST. DIRECTOR OF PUBLIC WORKS — DIRECTOR OF PUBLIC WORKS

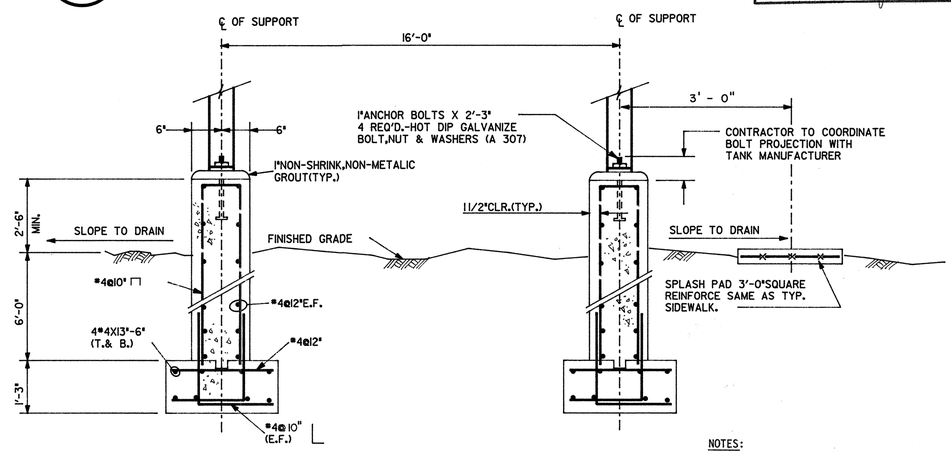

4/6 SECTION
NOT TO SCALE

NOTES:

1. ALL MEASUREMENTS FROM BOTTOM OF TANK.
2. INSULATED EXTERIOR METAL PIPING WITH 1-1/2" HIGH DENSITY FIBERGLASS INSULATION WITH KRAFT PAPER BACKING-WATERPROOF WITH BITUMINOUS COATING.
3. PROTECT 3/4" PLASTIC SIGHT TUBE BY ENCASING IT IN 2" PLASTIC TUBING SO AS TO LEAVE AN AIR GAP BETWEEN THE TWO.

WATER PLANT NO. 3 HYDROPNEUMATIC TANK NOZZLE SCHEDULE					
MARK	NO. REQ'D.	SIZE	RATING	TYPE	SERVICE
A	1	1"	3000	HALF-CPLG. TD.	AIR INLET / AIR DUMP
B	1	2"	3000	FLG.	PRESS SAFETY VALVE
C	1	1"	3000	HALF-CPLG. TD.	PRESS. SENSING
D	1	4"	ANSI B16.1 125FF	FLG.	DRAIN
E,F	2	1"	3000	HALF-CPLG. TD.	SIGHT TUBE CONN.
G	1	24"	ANSI B16.1 125FF	FLG.	MANHOLE W/ BLIND FLG. AND HINGED DAVIT
H	1	16"	ANSI B16.1 125FF	FLG.	WATER INLET / OUTLET
I	1	4"	ANSI B16.1 125FF	FLG.	PROBE WELL

HYDROPNEUMATIC TANKS

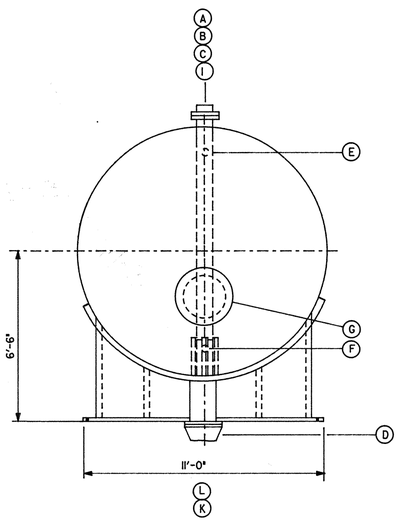

5/6 END VIEW
NOT TO SCALE

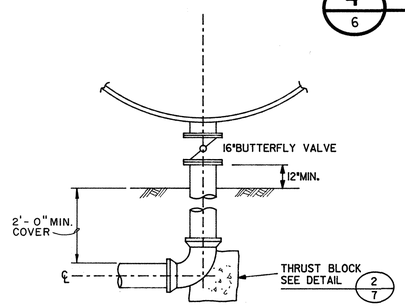

6/6 DETAIL
NOT TO SCALE

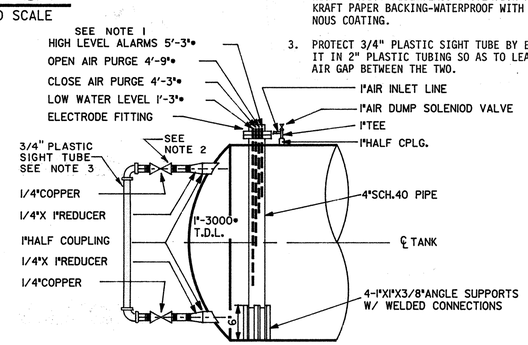

7/6 DETAIL
NOT TO SCALE

No.	Date	Revisions	App.

Lockwood, Andrews & Newnam, Inc.
Engineering-Architecture-Planning-Project Management

STATE OF TEXAS — CHARLES R. NEELY — 48126 — REGISTERED PROFESSIONAL ENGINEER

WATER PLANT No. 3
WEST HOUSTON MUNICIPAL UTILITY DISTRICT
WEST OAKS PLAZA, SECTION ONE
HARRIS COUNTY, TEXAS

HYDROPNEUMATIC TANK DETAILS

Scale: NONE — Date: JUNE, 1982
Designed by:
Drawn by:
Checked by:
Approved by:
Project No. 1570-20-001-000

Sheet 6 of 13

W.P. 0238

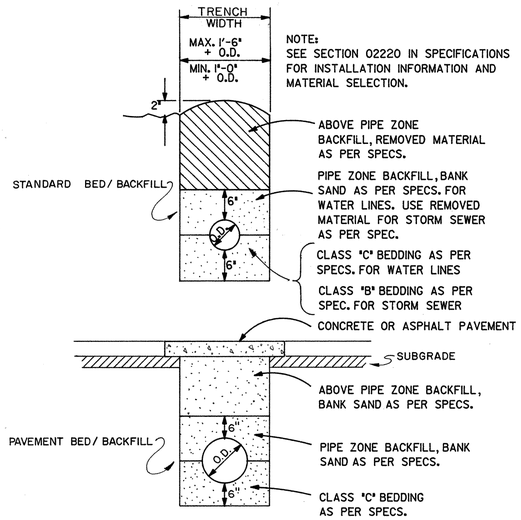

1/7 PLANT PIPING BEDDING DETAILS

NOT TO SCALE

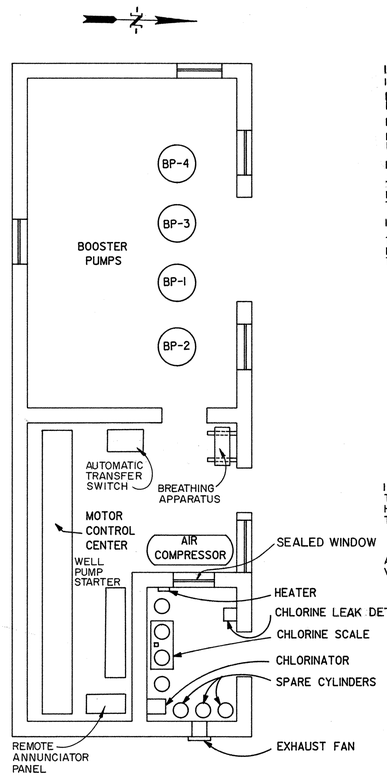

3/7 BOOSTER PUMP & CONTROL BUILDING EQUIPMENT LAYOUT

NOT TO SCALE

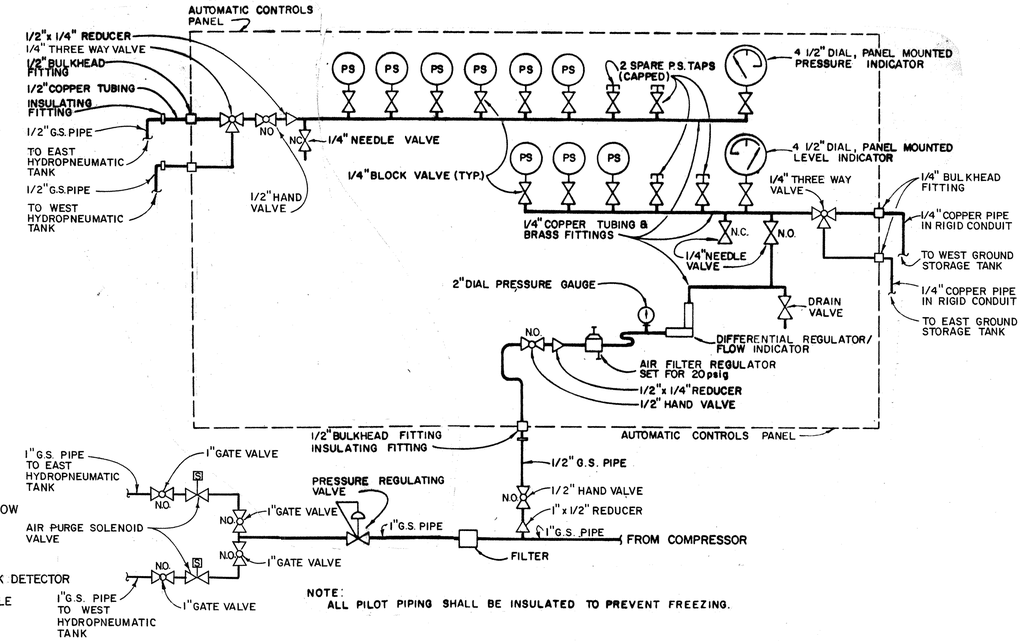

5/7 SCHEMATIC - GROUND STORAGE TANK, LEVEL CONTROL & BOOSTER PUMPS PRESSURE CONTROL

NOT TO SCALE

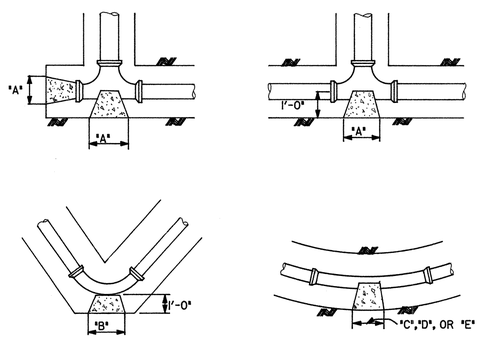

NOTE:

1. HEIGHTS OF ALL BLOCKS SHALL BE EQUAL TO THE "A", "B", "C", "D", OR "E" DIMENSION CALLED FOR.
2. ALL CONCRETE TO BE POURED AGAINST FIRM UNDISTURBED SOIL.

PIPE SIZE	"A" PLUGS & TEES	"B" 90° BEND	"C" 45° BEND	"D" 22° 30' BEND	"E" 11° 15' BEND
6"	1'-0"	1'-2"	1'-2"	1'-2"	1'-2"
8"	1'-3"	1'-6"	1'-6"	1'-6"	1'-6"
10"	2'-0"	2'-3"	2'-0"	2'-0"	2'-0"
12"	2'-8"	3'-0"	2'-3"	2'-3"	2'-3"
16"	3'-6"	4'-3"	3'-0"	2'-6"	2'-6"

2/7 THRUST BLOCK DETAIL

NOT TO SCALE

NOTES:

1. FLOAT SWITCH & TRANSFER PUMP CONNECTED TO EMERGENCY POWER CIRCUIT.
2. FLOAT SWITCH WILL STOP TRANSFER PUMP AT HIGH LIQUID LEVEL & START IT AT LOW LIQUID LEVEL.
3. FURNISHED WITH EMERGENCY GENERATOR.

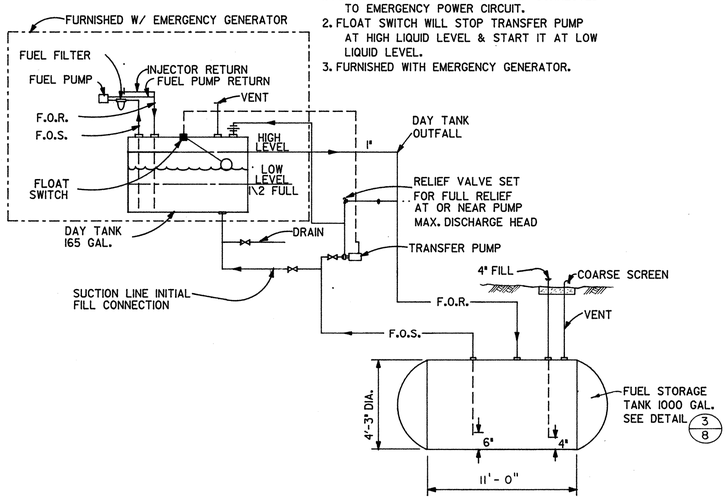

4/7 EMERGENCY GENERATOR FUEL OIL PIPING SCHEMATIC

NOT TO SCALE

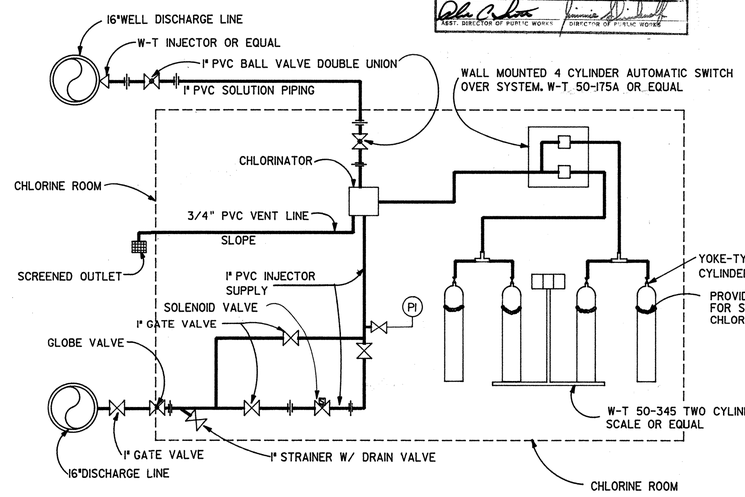

6/7 CHLORINATION SCHEMATIC

NOT TO SCALE

CITY OF HOUSTON
DEPARTMENT OF PUBLIC WORKS
APPROVALS
WATER DESIGN — PAVING DEPT.
WATER QUALITY — STORM SEWERS
ASSISTANT DIRECTOR - WATER DIV. — SANITARY SEWERS
CHIEF ENG. - SEWER DIV.
OTHER DEPT'S.
TRAFFIC & TRANSPORTATION DEPT. — CITY PLANNING DEPT.
ASST. DIRECTOR OF PUBLIC WORKS — DIRECTOR OF PUBLIC WORKS

No. | Date | Revisions | App.

Lockwood, Andrews & Newnam, Inc.
Engineering-Architecture-Planning-Project Management

WATER PLANT No. 3
WEST HOUSTON MUNICIPAL UTILITY DISTRICT
WEST OAKS PLAZA, SECTION I
HARRIS COUNTY, TEXAS

MISCELLANEOUS DETAILS

Scale: NONE | Date: JUNE, 1982
Designed by: Ron Burp
Drawn by: Joe A. Gonzales
Checked by: CS Neely
Approved by:
Project No. 1570-20-001-000

Sheet 7 of 13

W.P. 0238

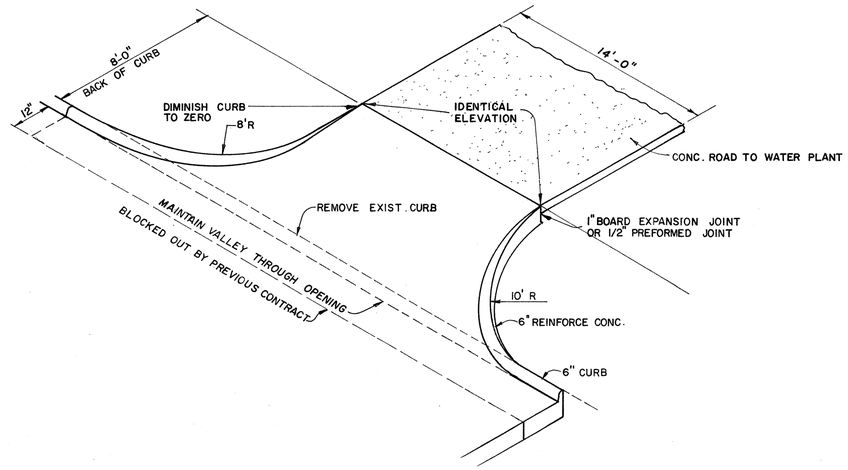

1/8 INTERSECTION DETAIL
N.T.S.

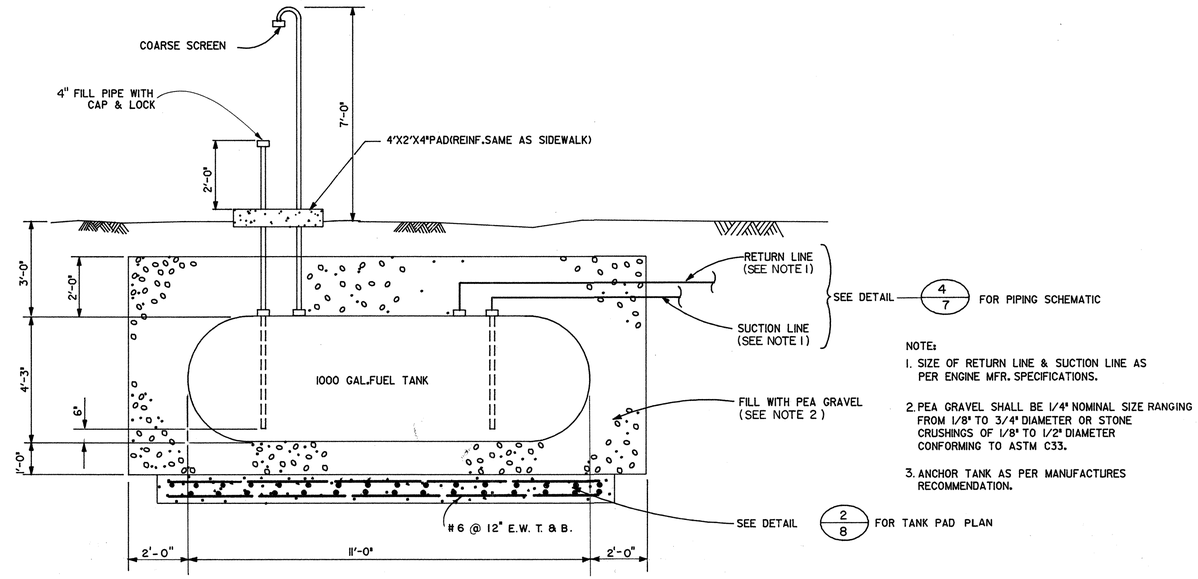

NOTES:
1. SIZE OF RETURN LINE & SUCTION LINE AS PER ENGINE MFR. SPECIFICATIONS.
2. PEA GRAVEL SHALL BE 1/4" NOMINAL SIZE RANGING FROM 1/8" TO 3/4" DIAMETER OR STONE CRUSHINGS OF 1/8" TO 1/2" DIAMETER CONFORMING TO ASTM C33.
3. ANCHOR TANK AS PER MANUFACTURES RECOMMENDATION.

3/8 FUEL OIL TANK DETAIL
N.T.S.

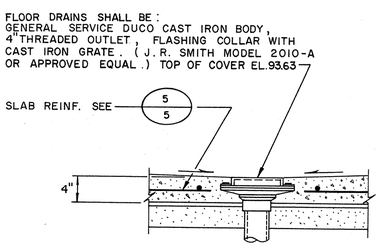

9/8 DRAIN DETAIL
N.T.S.

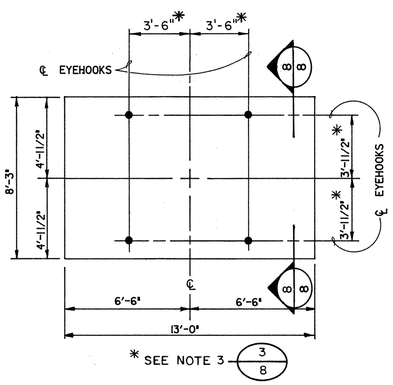

2/8 1000 GALLON TANK PAD
N.T.S.

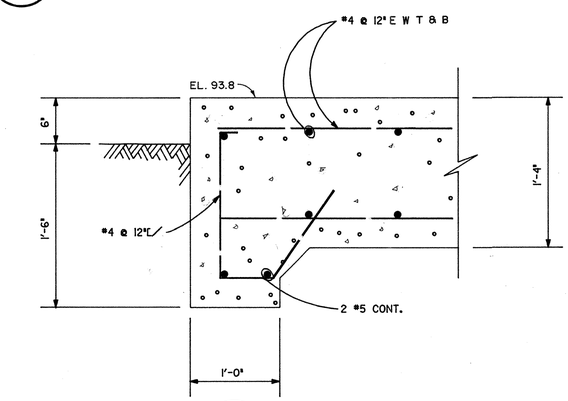

4/8 SECTION
N.T.S.

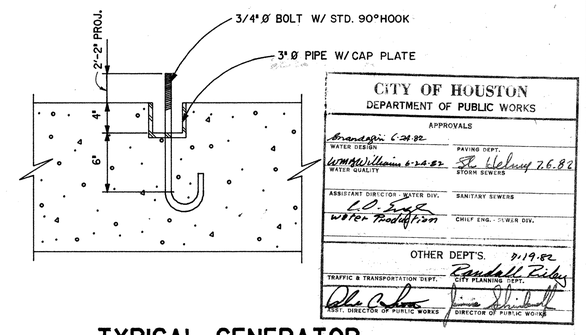

5/8 TYPICAL GENERATOR FOUNDATION BOLT
N.T.S.

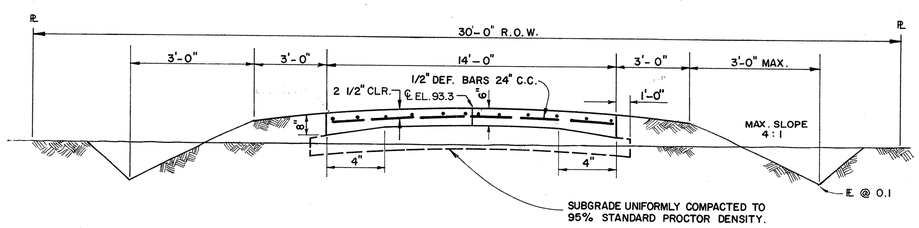

6/8 TYPICAL PAVING SECTION
N.T.S.

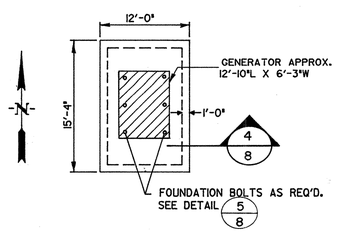

7/8 GENERATOR BASE
N.T.S.

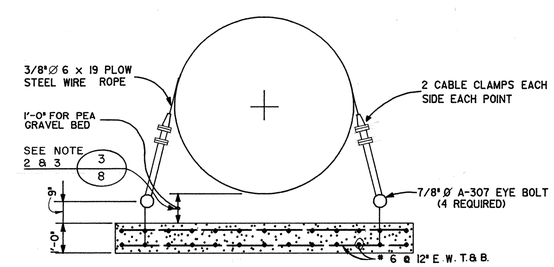

8/8 SECTION
N.T.S.

No.	Date	Revisions	App.

Lockwood, Andrews & Newnam, Inc.
Engineering · Architecture · Planning · Project Management

STATE OF TEXAS — CHARLES B. NEELY — 48126 — REGISTERED PROFESSIONAL ENGINEER

WATER PLANT No. 3

WEST HOUSTON MUNICIPAL UTILITY DISTRICT
WEST OAKS PLAZA, SECTION ONE
HARRIS COUNTY, TEXAS

MISCELLANEUS DETAILS

Scale: NONE | Date: JUNE, 1982
Designed by: Ron Bupp
Drawn by: C. Gomez
Checked by: C.B. Neely
Approved by:
Project No. 1570-20-001-000

Sheet 8 of 13

W.P. 0238

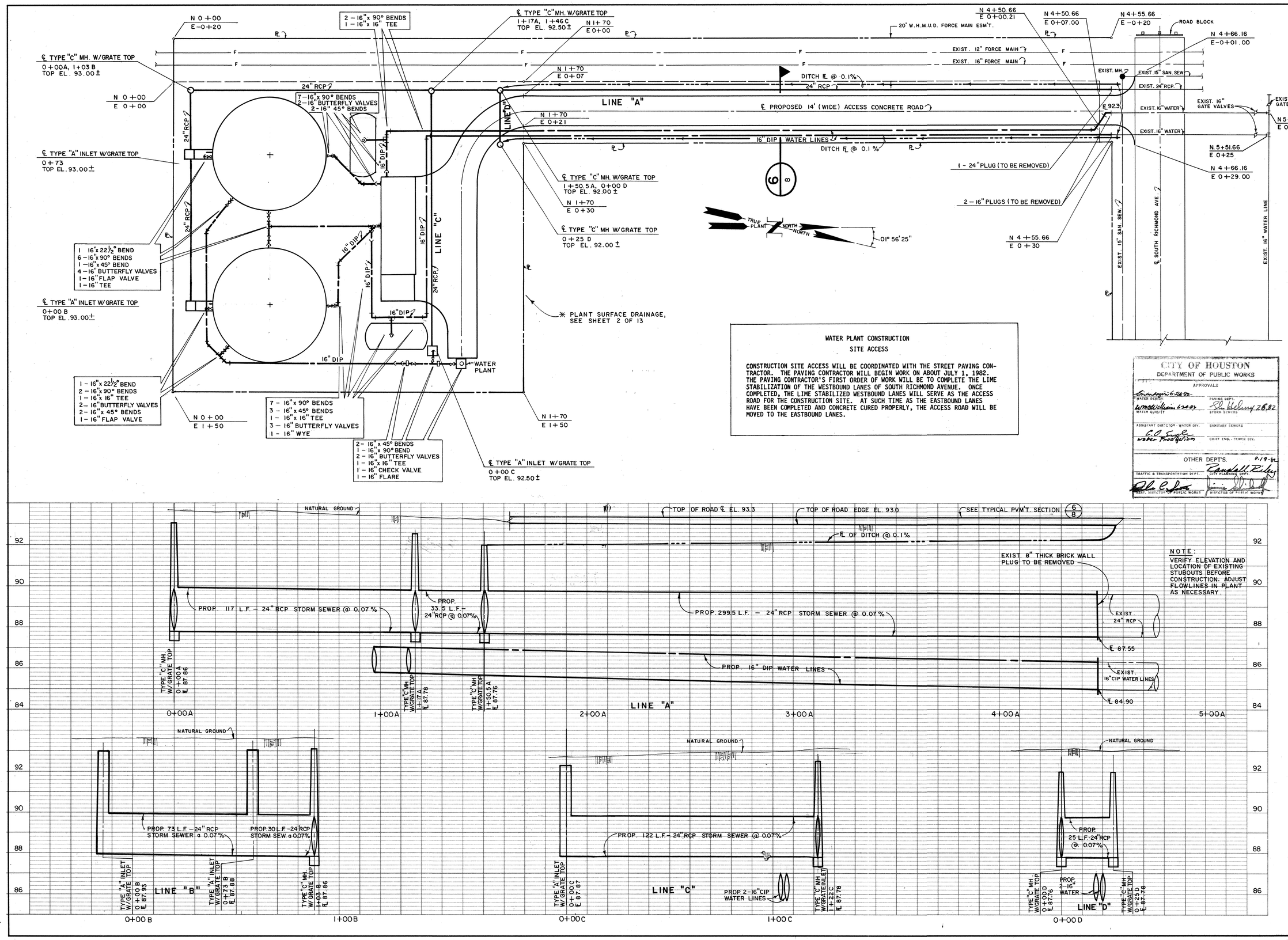

NOTE:
VERIFY ELEVATION AND LOCATION OF EXISTING STUBOUTS BEFORE CONSTRUCTION. ADJUST FLOWLINES IN PLANT AS NECESSARY.

WATER PLANT CONSTRUCTION

SITE ACCESS

CONSTRUCTION SITE ACCESS WILL BE COORDINATED WITH THE STREET PAVING CONTRACTOR. THE PAVING CONTRACTOR WILL BEGIN WORK ON ABOUT JULY 1, 1982. THE PAVING CONTRACTOR'S FIRST ORDER OF WORK WILL BE TO COMPLETE THE LIME STABILIZATION OF THE WESTBOUND LANES OF SOUTH RICHMOND AVENUE. ONCE COMPLETED, THE LIME STABILIZED WESTBOUND LANES WILL SERVE AS THE ACCESS ROAD FOR THE CONSTRUCTION SITE. AT SUCH TIME AS THE EASTBOUND LANES HAVE BEEN COMPLETED AND CONCRETE CURED PROPERLY, THE ACCESS ROAD WILL BE MOVED TO THE EASTBOUND LANES.

CITY OF HOUSTON
DEPARTMENT OF PUBLIC WORKS

APPROVALS

WATER DESIGN 6-24-82	PAVING DEPT. 6-28-82
WATER QUALITY 6-24-82	STORM SEWERS
ASSISTANT DIR'CTOR - WATER DIV.	SANITARY SEWERS
WATER PRODUCTION	CHIEF ENG. - SEWER DIV.
OTHER DEPT'S. 9-19-82	
TRAFFIC & TRANSPORTATION DEPT.	CITY PLANNING DEPT.
ASST. DIRECTOR OF PUBLIC WORKS	DIRECTOR OF PUBLIC WORKS

No.	Date	Revisions	App.

Lockwood, Andrews & Newnam, Inc.
Engineering • Architecture • Planning • Project Management

STATE OF TEXAS
CHARLES B. NEELEY
48726
REGISTERED PROFESSIONAL ENGINEER

WATER PLANT No. 3

HOUSTON MUNICIPAL UTILITY DISTRICT
WEST OAKS PLAZA, SECTION ONE
HARRIS COUNTY, TEXAS

PROPOSED DRAINAGE

Scale: 1"=20'H; 1"=2'V Date: JUNE, 1982
Designed by: Ron Bryce
Drawn by: Joe G. Langston
Checked by: C B Neeley
Approved by:
Project No. 1570-20-001-000

Sheet 9 of 13

W.P. 0238

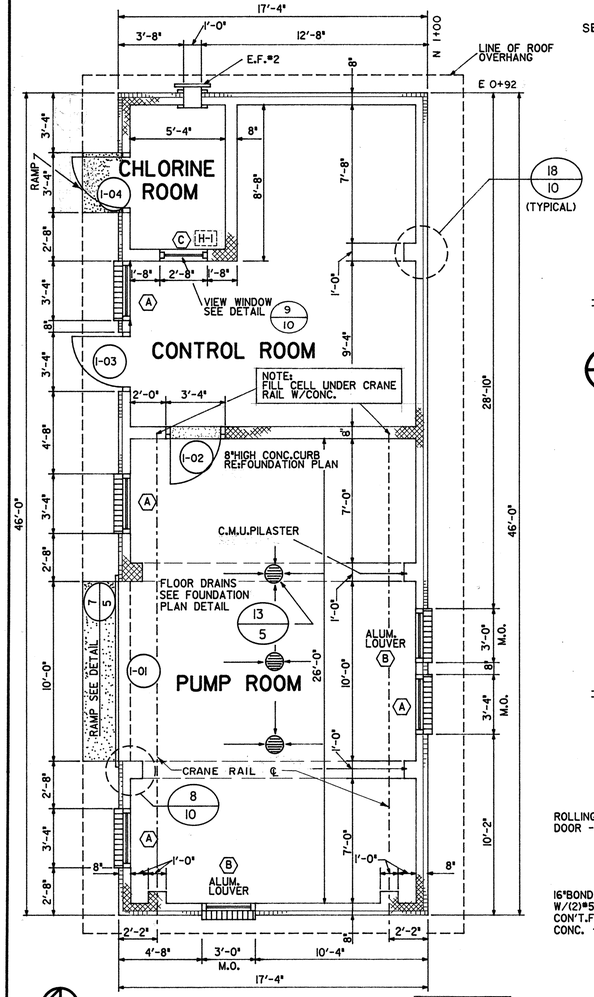

1/10 FLOOR PLAN
1/4"=1'-0"

FINISHED FLOOR EL. 93.8

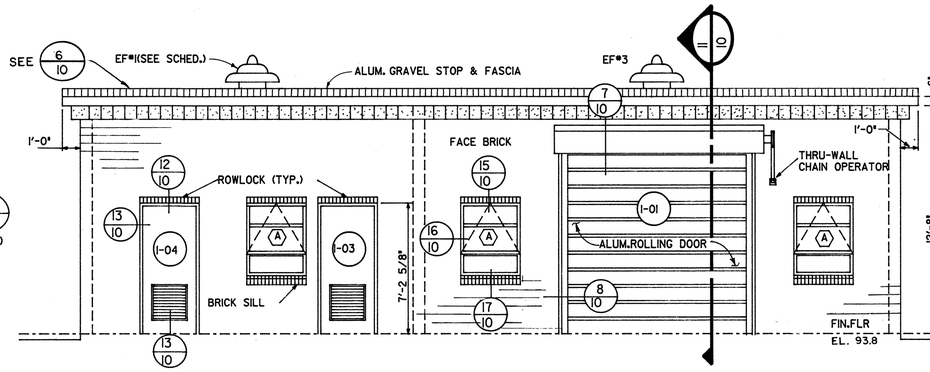

2/10 NORTH ELEVATION
1/4"=1'-0"

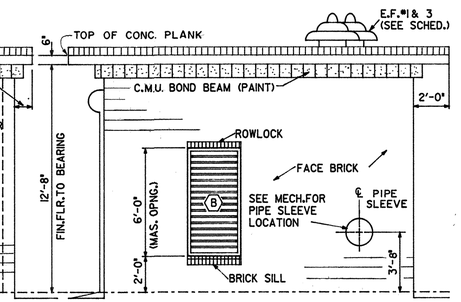

3/10 WEST ELEVATION
1/4"=1'-0"

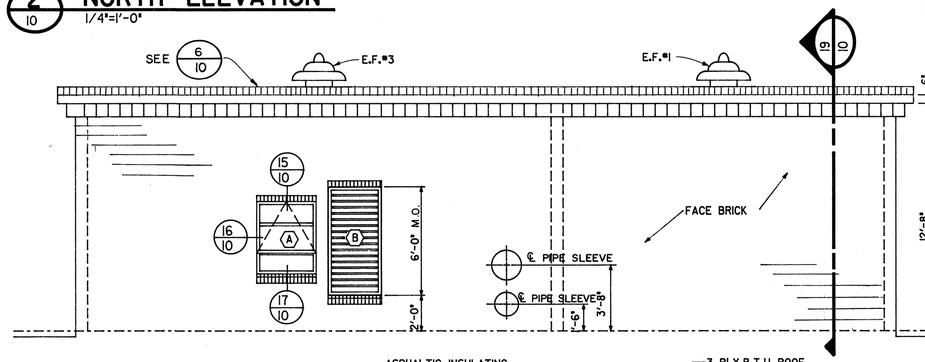

4/10 SOUTH ELEVATION
1/4"=1'-0"

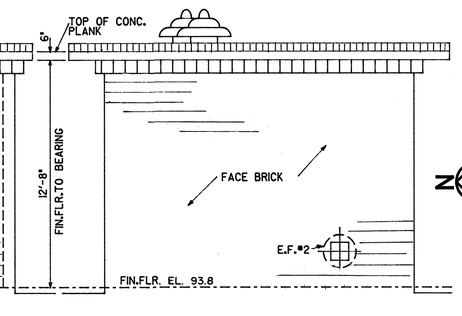

5/10 EAST ELEVATION
1/4"=1'-0"

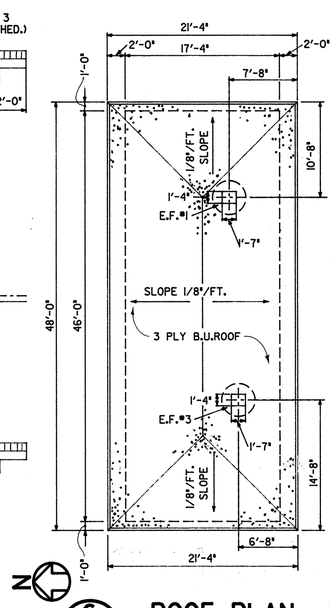

6/10 ROOF PLAN
1/8"=1'-0"

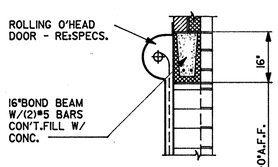

7/10 HEAD
1/2"=1'-0"

CITY OF HOUSTON
DEPARTMENT OF PUBLIC WORKS
APPROVALS
OTHER DEPTS.

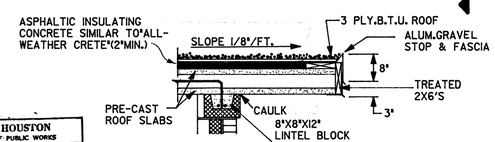

10/10 DETAIL
1/2"=1'-0"

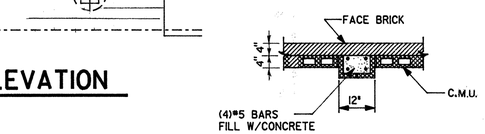

18/10 PILASTER DETAIL
1/2"=1'-0"

HEATER SCHEDULE			
MARK	KW	VOLTAGE	REMARKS
H-1	2	206/240	CHROMOLOX CSF-220

EXHAUST FAN SCHEDULE					
MARK	RPM	HP	CFM	SP	REMARKS
EF-1	1750	1/6	1400	.125	ACME PR504
EF-2	1505	1/22	600	.125	ACME PW76
EF-3	469	1	8035	.375	ACME P33J

DOOR SCHEDULE										
DOOR					FRAME		DETAILS			REMARKS
MARK	SIZE	THK.	TYPE	MAT'L.	TYPE	MAT'L.	HEAD	JAMB	SILL	
I-01	10'-0"X10'-0"	-	C	ALUM.	-	-	7/10	8/10	-	RE:SPECS.
I-02	3'-0"X7'-0"	13/4"	D	ALUM.	1	ALUM.	12/10	13/10	-	
I-03	DO	DO	D	DO	DO	DO	12/10	13/10	14/10	ALUM.THRESH
I-04	DO	DO	D	DO	DO	DO	DO	DO	DO	DO

WINDOW & LOUVER SCHEDULE							
MARK	SIZE	TYPE	MAT'L.	HEAD	JAMB	SILL	REMARKS
(A)	3'-4"X4'-0"	PROJECTED	ALUM.	15/10	16/10	17/10	1/4"LEXAN
(B)	2'-11"X5'-11"	FIXED	ALUM.	-	-	-	RE:SPECS.
(C)	2'-7 1/2"X2'-11 1/2"	DO	ALUM.FRAME	9/10	9/10	9/10	1/4"LEXAN

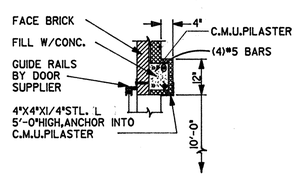

8/10 JAMB
1/2"=1'-0"

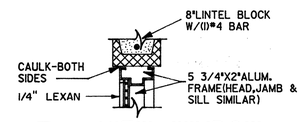

9/10 VIEW WINDOW
NOT TO SCALE

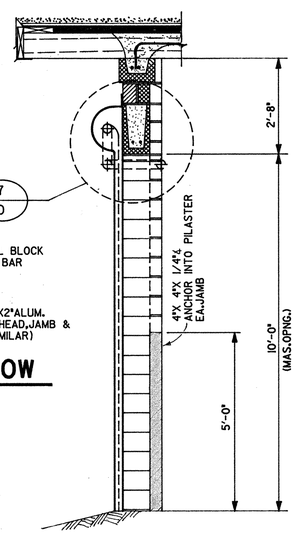

11/10 WALL SECTION
1/2"=1'-0"

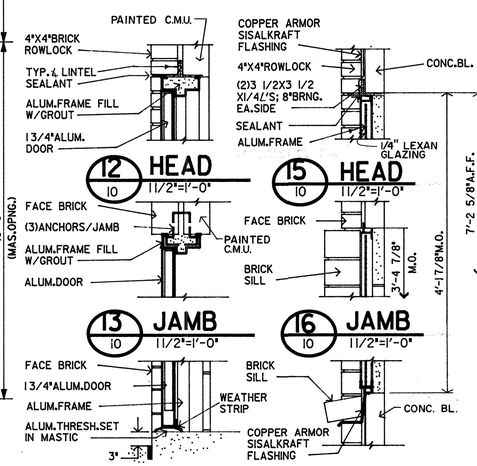

12/10 HEAD
1 1/2"=1'-0"

15/10 HEAD
1 1/2"=1'-0"

13/10 JAMB
1 1/2"=1'-0"

16/10 JAMB
1 1/2"=1'-0"

14/10 SILL
1 1/2"=1'-0"

17/10 SILL
1 1/2"=1'-0"

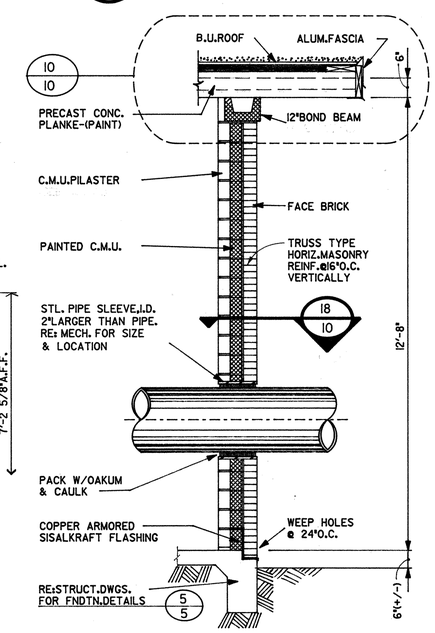

19/10 TYPICAL WALL SECTION
1/2"=1'-0"

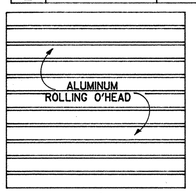

(C) DOOR TYPES

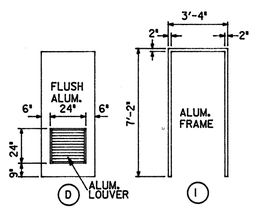

(D) (I) FRAME TYPE

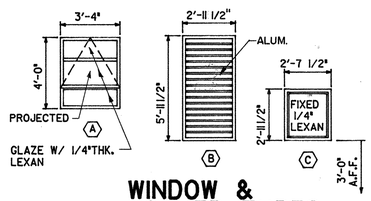

WINDOW & LOUVER TYPES

No.	Date	Revisions	App.

Lockwood, Andrews & Newnam, Inc.
Engineering-Architecture-Planning-Project Management

TEXAS REGISTERED PROFESSIONAL ENGINEER 48126 CHARLES R. NUELLY

WATER PLANT No. 3

WEST HOUSTON MUNICIPAL UTILITY DISTRICT
WEST OAKS PLAZA, SECTION ONE
HARRIS COUNTY, TEXAS

BOOSTER PUMPS & CONTROL ROOM PLANS AND DETAILS

Scale: AS SHOWN Date: JUNE, 1982
Designed by:
Drawn by:
Checked by:
Approved by:
Project No. 1570-20-001-000

Sheet 10 of 13

W.P. 0238

NOTES:

1. RUN WIRES FOR ROTATING BEACON AND AREA LIGHT IN SAME 1" CONDUIT FROM AUTOMATIC CONTROL SECTION IN MCC.
2. SERVICE POLE MUST BE LOCATED WITHIN 25' OF HL&P TERMINAL POLE.
3. COORDINATE UNDERGROUND CONDUIT RUNS WITH PIPING CONTRACTOR.
4. STUB UP LOCATION OF CONDUITS AT GENERATOR TO BE DETERMINED AFTER GENERATOR IS SELECTED.

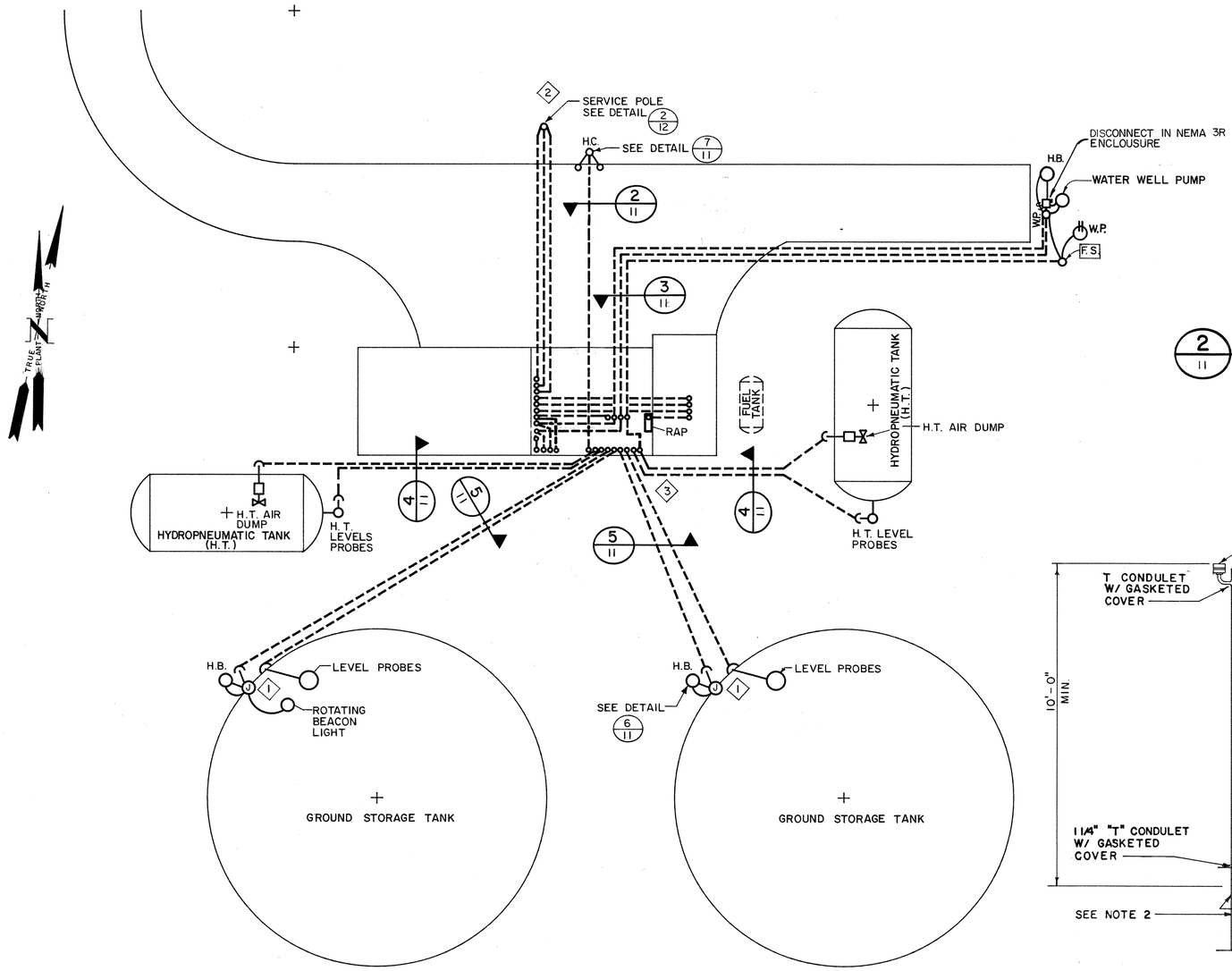

1/11 SITE PLAN
NOT TO SCALE

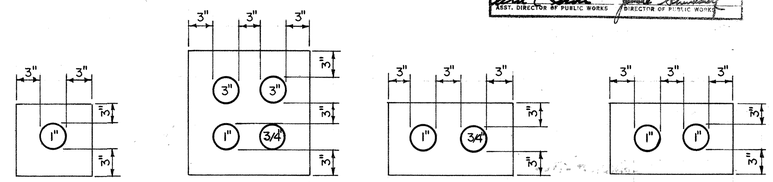

2/11 DETAIL NOT TO SCALE
3/11 DETAIL NOT TO SCALE
4/11 DETAIL NOT TO SCALE
5/11 DETAIL NOT TO SCALE

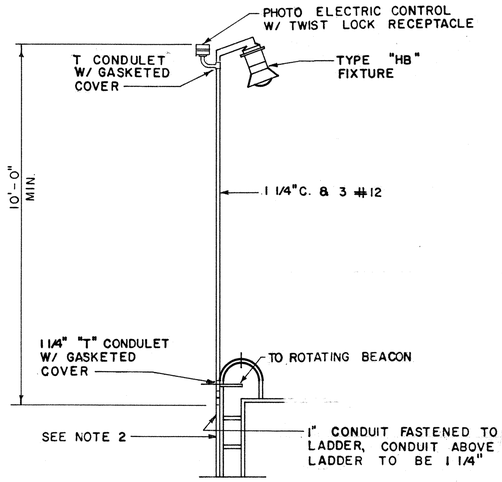

6/11 DETAIL AREA LIGHT
NOT TO SCALE

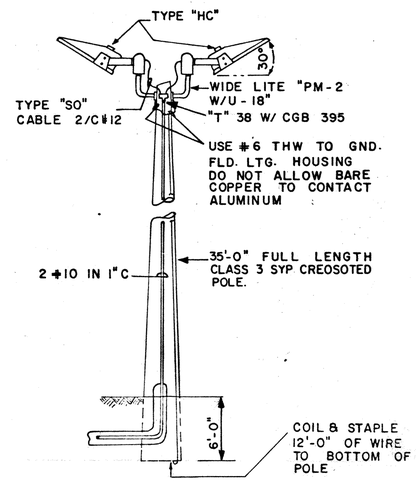

7/11 FLOOD LIGHT DETAIL
NOT TO SCALE

CITY OF HOUSTON
DEPARTMENT OF PUBLIC WORKS
APPROVALS
WATER DESIGN — 6-24-82
WATER QUALITY — 6-24-82
PAVING DEPT. — 7-6-82
SEWER SERVICES
ASSISTANT DIRECTOR WATER DIV. — Water Production
SANITARY SEWERS
CHIEF ENG. - SEWER DIV.
OTHER DEPT'S. — 7-19-82
TRAFFIC & TRANSPORTATION DEPT.
CITY PLANNING DEPT.
ASST. DIRECTOR OF PUBLIC WORKS
DIRECTOR OF PUBLIC WORKS

No.	Date	Revisions	App.

Lockwood, Andrews & Newnam, Inc.
Engineering-Architecture-Planning-Project Management

STATE OF TEXAS — D. L. MEYER — 50603 — REGISTERED PROFESSIONAL ENGINEER

WATER PLANT No. 3

WEST HOUSTON MUNICIPAL UTILITY DISTRICT
WEST OAKS PLAZA, SECTION I
HARRIS COUNTY, TEXAS

ELECTRICAL SITE PLAN AND DETAILS

Scale: NONE Date: JUNE, 1982
Designed by: L. Shaughnessy
Drawn by: Jim G. Gonzalez
Checked by: D. L. Meyer
Approved by:
Project No. 1570-20-001-000

Sheet 11 of 13

W.P. 0238

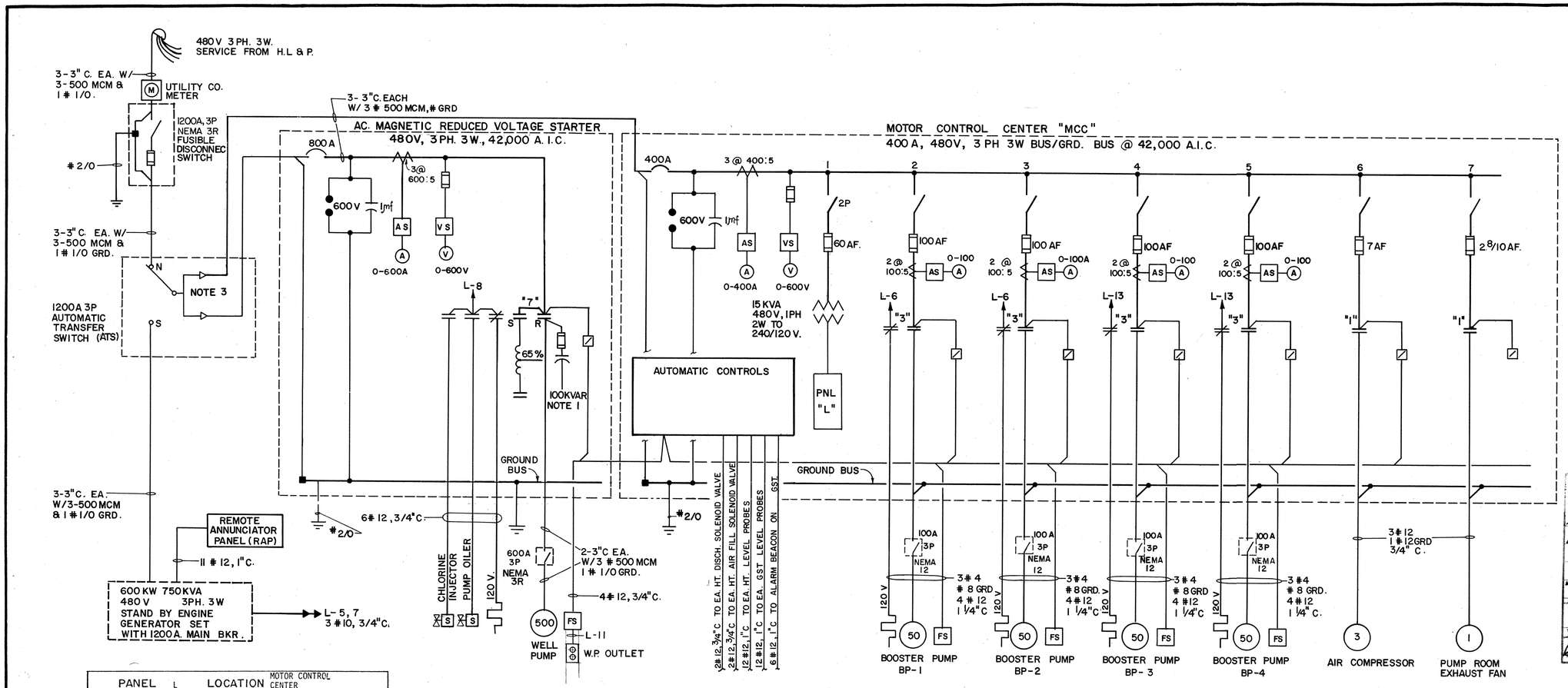

1/12 ONE LINE DIAGRAM

PANEL L	LOCATION MOTOR CONTROL CENTER				
120/240 V 1 PH 3 W					
ALL BREAKERS 20A EXCEPT AS NOTED					
KW	EQUIPMENT	CKT. No.	CKT. No.	EQUIPMENT	KW.
1.1	TIME SW & LIGHTING	1	2	AUTO CONTROLS	.5
SEE NOTE 2 .6	DETECTOR, 1FA, EF - 2	3	4	INSTR. PNL.	.7
2.0	BATTERY CHARGER	5 30	6	BOOSTER P. SPACE HTRS.	1.0
2.0	EMG - GEN HTRS.	7 30	8	CHLORINE INJECTOR	.9
2.2	SPACE HTR.	9	10	AIR DRYER EF-1	.7
		11	* 12	RCPT	1.2
1.0	BOOSTER P. SPACE HTR.	13	14	PUMP HOUSE LIGHTS	.7
	SPACE	15	16	SPACE	
CONNECTED ____ KW			EST. DEMAND ____ KW		

* GROUND FAULT INTERRUPTER

NOTES

1. PROVIDE CAPACITORS WITH KVAR RATINGS AS RECOMMENDED BY THE MOTOR MANUFACTURER TO BRING THE MOTOR OPERATING POWER FACTOR UP TO 90%.
2. PROVIDE HANDLE LOCK ON BREAKER.
3. INSTALL TWO STANDARD LUGS SIDE BY SIDE WITH 4 HOLES EACH.

LIGHTING FIXTURE SCHEDULE

TYPE	MANUFACTURER & CATALOG NO.	DESCRIPTION	MOUNTING	LAMPS	DIFFUSER	REMARKS
FA	Daybrite WR41241 Miller KD-2100-04	Vaportight, Non Metallic Body	Surface	2-F40RS		All plastic and Gasketed
HA	Holophane #419-120 Wall-Tek TW-705-420	Wallpack	Surface	1-LU70		Mount 9'-0" AFF 210V Ballast
HB	GE H5110L5JGG CH VMVSJ100GP/120	Stanchion Mount		1-LU100		120 V Ballast
HC	Holophane #1230-120-R	Floodlight		H.P.S. 1-LU400		Provide Photo 120 V Ballast; control

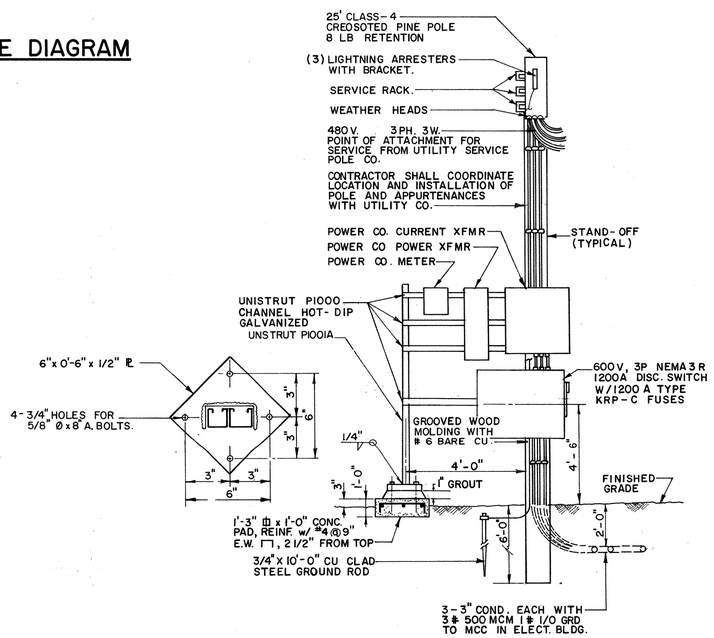

2/12 SERVICE DROP DETAIL
N.T.S.

LEGEND

A	INCANDESCENT - LETTER DENOTES TYPE
HA	HIGH INTENSITY DISCHARGE FIXTURE - LETTER DENOTES TYPE
FA	FLOURESCENT FIXTURE - LETTER DENOTES TYPE
	DUPLEX RECEPTACLE 15A-125V; 2P-3W-G; NEMA 5-15R; 36" AFF.
A	SINGLE RECEPTACLE 30A-250V; 2P-3W-G; NEMA 6-30R, 30" AFF.
S	SINGLE POLE WALL SWITCH
S_M	MANUAL MOTOR STARTER WITH THERMAL ELEMENT
S_P	SWITCH WITH PILOT LIGHT
	BRANCH CIRCUIT OR FEEDER EXPOSED OR CONCEALED IN EITHER CEILING OR WALL
	BRANCH CIRCUIT OR FEEDER IN FLOOR SLAB OR UNDERGROUNG
	SWITCH LEG
L-1,3	HOMERUN TO PANELBOARD - SUBSCRIPT DENOTES PANELBOARD AND CIRCUITS
E	EMPTY CONDUIT
	CAPPED CONDUIT
	CONDUIT WEATHERHEAD
#270 G	BARE STRANDED COPPER GROUND WIRE, SIZE AS INDICATED
OR	3/4" x 10'-0" LONG COPPER CLAD GROUND ROD
OR	NON-FUSIBLE DISCONNECT SWITCH - SIZE AS SHOWN
OR	FUSIBLE DISCONNECT SWITCH - SIZE AS NOTED
OR T	TRANSFORMER - DESCRIPTION AND RATING AS SHOWN
OR	MAGNETIC MOTOR STARTER - SIZE AS NOTED
30KVAR	CAPACITOR - SIZE AS NOTED
3@ 200:5	CURRENT TRANSFORMER - NUMBER AND RATIO AS INDICATED
A	AMMETER - SCALE AS INDICATED
V	VOLTMETER - SCALE AS INDICATED
AS	AMMETER SWITCH - PHASE A, B, C, OFF
VS	VOLTMETER SWITCH - PHASE AB, BC, CA, OFF, AN, BN, CN
	SELECTOR SWITCH - "HAND-OFF-AUTO"
	PILOT LIGHT
M 1/2	SINGLE PHASE MOTOR - HP AS NOTED
M	THREE PHASE MOTOR - HP AS NOTED
120V	MOTOR SPACE HEATER - VOLTAGE AS INDICATED
J	JUNCTION BOX
FS	FLOW SWITCH
S	SOLENOID VALVE
WP	WEATHERPROOF
650V	SURGE ARRESTER - VOLTAGE RATING AS INDICATED

CITY OF HOUSTON
DEPARTMENT OF PUBLIC WORKS
APPROVALS
WATER DESIGN — 6-24-82
WATER QUALITY — 6-24-82
PAYING DEPT. — STORM SEWERS — 7-6-82
ASSISTANT DIRECTOR - WATER DIV. — WATER PRODUCTION
SANITARY SEWERS
CHIEF ENG. - SEWER DIV.
OTHER DEPT'S.
TRAFFIC & TRANSPORTATION DEPT.
CITY PLANNING DEPT. — 7-19-82
ASST. DIRECTOR OF PUBLIC WORKS
DIRECTOR OF PUBLIC WORKS

No.	Date	Revisions	App.

Lockwood, Andrews & Newnam, Inc.
Engineering-Architecture-Planning-Project Management

STATE OF TEXAS D. L. MEYER 60603 REGISTERED PROFESSIONAL ENGINEER

WATER PLANT No. 3

WEST HOUSTON MUNICIPAL UTILITY DISTRICT
WEST OAKS PLAZA, SECTION ONE
HARRIS COUNTY, TEXAS

ONE LINE DIAGRAM AND SCHEDULES

Scale: NONE
Date: JUNE, 1982
Designed by: L. Shoquerlaya
Drawn by: C. Estevez
Checked by: D. L. Meyer
Approved by:
Project No. 1570-20-001-

Sheet 12 of 13

W.P. 0238

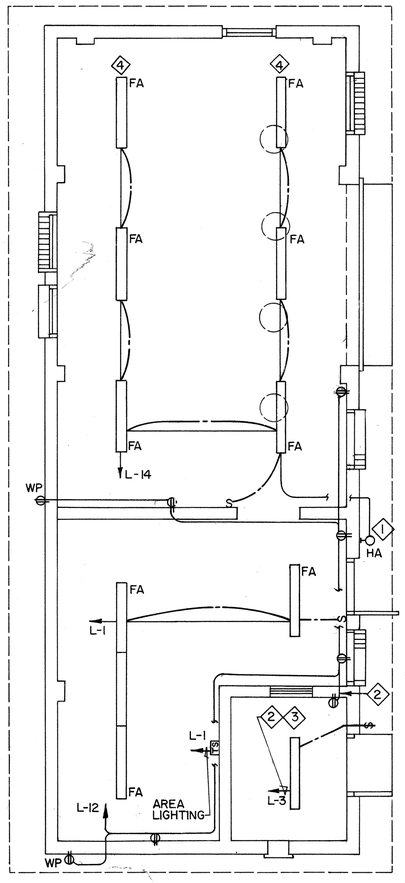

1/13 BLDG LTG & RCPT
NOT TO SCALE

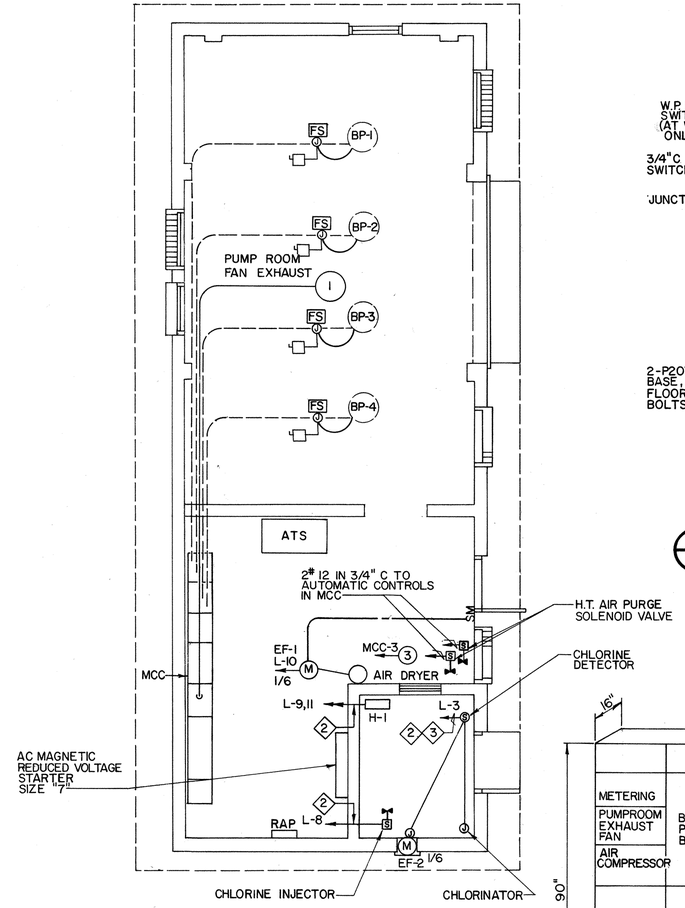

2/13 BLDG POWER
NOT TO SCALE

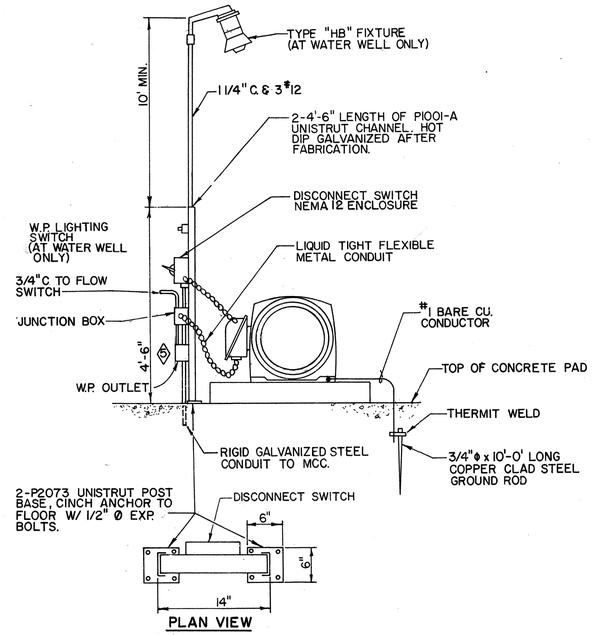

3/13 MOTOR CONNECTION DETAIL
NOT TO SCALE

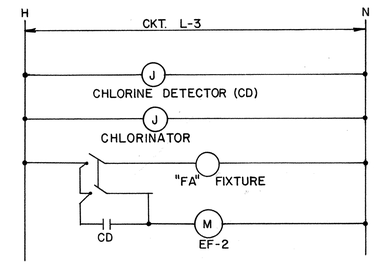

4/13 CIRCUIT L-3 DIAGRAM
NOT TO SCALE

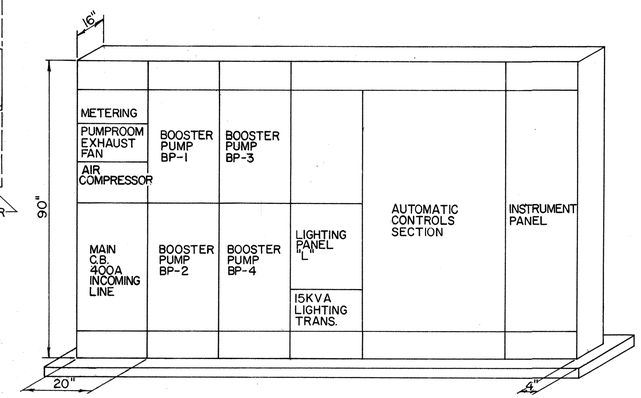

5/13 WATER PLANT #3 ELEV. FOR MCC.
NOT TO SCALE

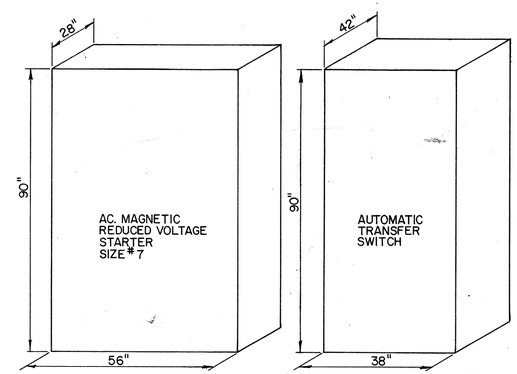

ACMAGNETIC REDUCED VOLTAGE STARTER SIZE "7", CLASS 11606 w/MOLDED CASE C.B. 800A, 3P

ATS. 1200A

6/13 WATER PLANT #3 ELEV. FOR STARTER & ATS.
NOT TO SCALE

NOTES:

1. WALLPACK LIGHT TO BE OPERATED FROM TIME SWITCH.
2. ALL ELECTRICAL CONDUITS ENTERING CHLORINE ROOM SHALL BE SEALED TO PREVENT GAS LEAKAGE THRU CONDUIT SYSTEM TO OTHER AREAS.
3. SEE DETAIL 4/14 FOR WIRING DIAGRAM OF CIRCUIT L-3.
4. COORDINATE LIGHT FIXTURE LOCATION WITH CRANE CONTRACTOR.
5. PROVIDE 120V W.P. OUTLET FOR WELL PUMP ONLY.

CITY OF HOUSTON
DEPARTMENT OF PUBLIC WORKS
APPROVALS
WATER DESIGN — Brandoggin 6-24-82
PAVING DEPT. — R. Hebert 7-6-82
WATER QUALITY — W.M. Williams 6-24-82
STORM SEWERS
ASSISTANT DIRECTOR - WATER DIV.
SANITARY SEWERS
CHIEF ENG. - SEWER DIV.
OTHER DEPT'S.
TRAFFIC & TRANSPORTATION DEPT. — Randall Riley 2-19-82
CITY PLANNING COMMISSION
ASST. DIRECTOR - DEPUTY DIR. WORKS
DIRECTOR OF PUBLIC WORKS

No.	Date	Revisions	App.

Lockwood, Andrews & Newnam, Inc.
Engineering-Architecture-Planning-Project Management

D. L. MEYER 60603 REGISTERED PROFESSIONAL ENGINEER TEXAS

WATER PLANT No. 3

WEST HOUSTON MUNICIPAL UTILITY DISTRICT
WEST OAKS PLAZA, SECTION ONE
HARRIS COUNTY, TEXAS

BUILDING, POWER AND LIGHTING LAYOUTS AND DETAILS

Scale: NONE
Date: JUNE, 1982
Designed by: L. Sharpe's Group
Drawn by: Freddie C. Fogle
Checked by: D. L. Meyer
Approved by: D. L. Meyer
Project No. 1570-20-001-

Sheet 13 of 13

W.P. 0238

TELEDYNE POST N16305

PLANS FOR CONSTRUCTION

OF

WATER PLANT NO. 3

FOR

WEST HOUSTON MUNICIPAL UTILITY DISTRICT

HARRIS COUNTY, TEXAS

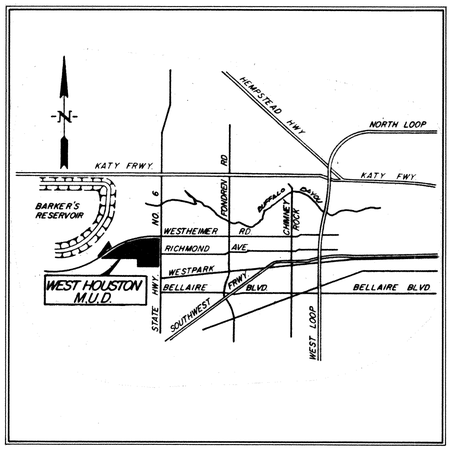

KEY MAP
NOT TO SCALE

JUNE , 1982

Lockwood, Andrews & Newnam, Inc.
Engineering • Architecture • Planning • Project Management

INDEX TO DRAWINGS

DRAWING No.	DESCRIPTION
1	HYDRAULIC SCHEMATIC
2	PLANT LAYOUT
3	BOOSTER PUMP AND WELL DETAILS
4	GROUND STORAGE TANK DETAILS
5	GROUND STORAGE TANK AND MISCELLANEOUS DETAILS
6	HYDROPNEUMATIC TANK DETAILS
7	MISCELLANEOUS DETAILS
8	MISCELLANEOUS DETAILS
9	PROPOSED DRAINAGE
10	BOOSTER PUMP AND CONTROL ROOM PLANS AND DETAILS
11	ELECTRICAL SITE PLAN AND DETAILS
12	ONE LINE DIAGRAM AND SCHEDULES
13	BUILDING, POWER AND LIGHTING LAYOUTS AND DETAILS

W.P. 0238

LEGEND

- PI — PRESSURE INDICATOR OR PRESSURE GAUGE
- FS — FLOW SWITCH
- FI — FLOW INDICATOR OR FLOW METER
- RV — PRESSURE RELIEF VALVE
- AD — AIR DUMP VALVE
- PLUG
- NO — NORMALLY OPEN
- NC — NORMALLY CLOSED
- GATE VALVE
- ELECTRICAL SOLENOID VALVE
- AIR RELIEF VALVE
- CHECK VALVE
- DIRECTION OF FLOW
- INLINE REDUCER
- BUTTERFLY VALVE
- SELF-CONTAINED PRESSURE CONTROL VALVE
- GLOBE VALVE

STORAGE TANK LEVELS

A. OVERFLOW AND HIGH LEVEL-PROBE LEVEL
B. STOP WELL PUMP-PROBE LEVEL
C. START WELL PUMP
D. RESET LOW LEVEL ALARM
E. LOW LEVEL (AUTO-VISUAL ALARM ONLY)
F. RESTORE AUTO OPERATION (RESTORE BOOSTER PUMPS ON AUTO/MANUAL OPERATION)
G. EXTREME LOW LEVEL (STOP ALL BOOSTER PUMPS ON AUTO/MANUAL OPERATION)

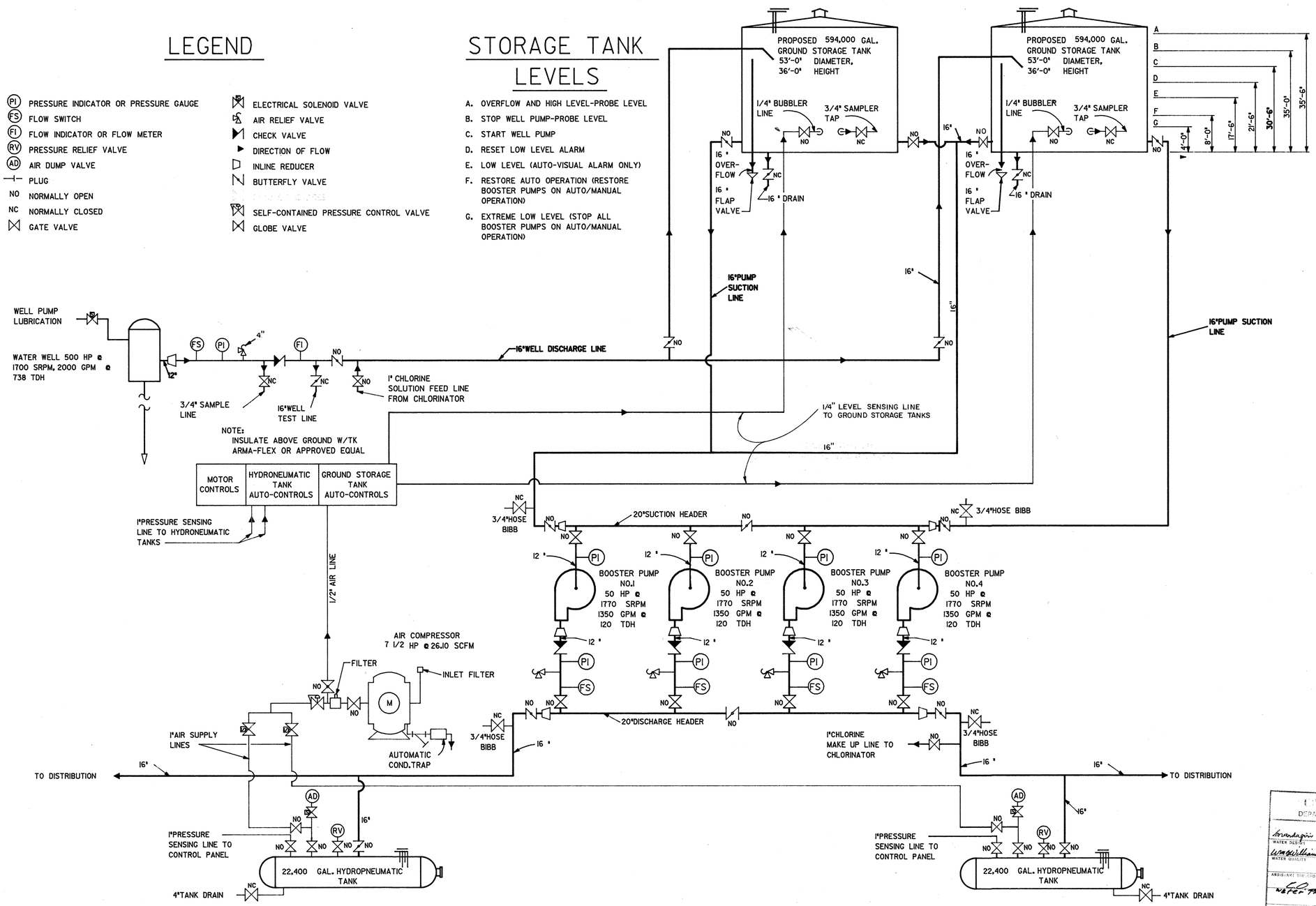

CITY OF HOUSTON
DEPARTMENT OF PUBLIC WORKS
APPROVALS
WATER DES. — 6-24-82
WATER QUALITY — Wm Williams 6-24-82
PAVING DEPT. — 6-28-82
BOOSTER SUPVRS.
ASSISTANT DIRECTOR - WATER DIV. — Water Production
SANITARY SEWERS
CHIEF ENG. - SEWER DIV.
OTHER DEPTS. — 7-19-82
TRAFFIC & TRANSPORTATION DEPT. — Randall Riley
PLANNING
ASST. DIRECTOR OF PUBLIC WORKS
DIRECTOR OF PUBLIC WORKS

No.	Date	Revisions	App.

Lockwood, Andrews & Newnam, Inc.
Engineering-Architecture-Planning-Project Management

STATE OF TEXAS — CHARLES R. NEELY — 48126 — REGISTERED PROFESSIONAL ENGINEER

WATER PLANT No. 3

WEST HOUSTON MUNICIPAL UTILITY DISTRICT
WEST OAKS PLAZA, SECTION ONE
HARRIS COUNTY, TEXAS

HYDRAULIC SCHEMATIC

Scale: NONE
Date: JUNE, 1982
Designed by:
Drawn by:
Checked by:
Approved by:
Project No. 1570-20-001-000

Sheet 1 of 13

W.P. 0238

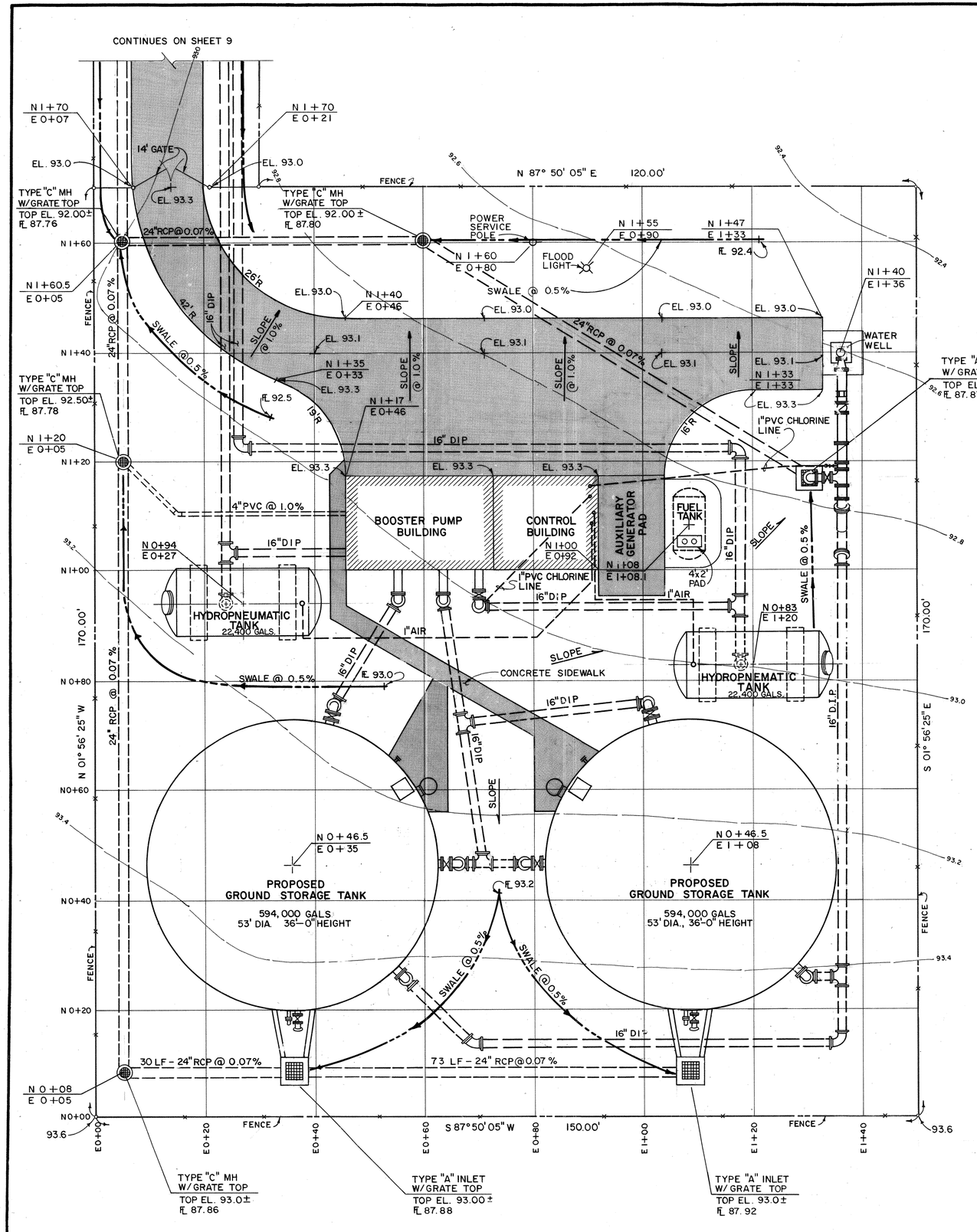

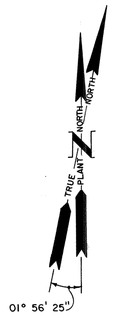

GENERAL NOTES

A. CONCRETE:

1. ALL CONCRETE SHALL HAVE A MINIMUM OF 4000 PSI COMPRESSIVE STRENGTH AT 28 DAYS.
2. CONCRETE SHALL BE MIXED, TRANSPORTED, PLACED, COMPACTED AND CURED IN STRICT ACCORDANCE WITH ALL PERTINENT A.C.I. SPECIFICATIONS AND STANDARDS, INCLUDING "BUILDING CODE REQUIREMENTS FOR REINFORCED CONCRETE".

B. REINFORCING:

ALL REINFORCING STEEL SHALL BE ASTM A615, GRADE 60 OR GRADE 40 AS PER SPECIFICATIONS, DESIGN, FABRICATE AND ERECT IN STRICT ACCORDANCE WITH A.C.I. AND C.R.S.I. STANDARDS AND SPECIFICATIONS.

C. STEEL:

ALL STEEL SHALL BE ASTM A36. DESIGN, FABRICATE AND ERECT IN STRICT ACCORDANCE WITH SPECIFICATIONS, STANDARDS, AND RECOMMENDATIONS OF THE AMERICAN INSTITUTE OF STEEL CONSTRUCTION (A.I.S.C.).

D. DIMENSIONS:

ALL DIMENSIONS SHALL BE VERIFIED BEFORE COMMENCING WORK. IT SHALL BE CONTRACTORS' RESPONSIBILITY TO REPORT ANY DISCREPANCIES TO ENGINEER IN A TIMELY MANNER.

E. STORM SEWERS:

REFER TO THE LATEST EDITION OF "SPECIFICATIONS FOR SEWER CONSTRUCTION", FORM E-14-62 OF THE DEPARTMENT OF PUBLIC HEALTH, CITY OF HOUSTON AND ALL APPLICABLE AMENDMENTS FOR STORM SEWER INLET AND MANHOLE DETAIL.

F. FENCE:

6 FT. CHAIN LINK FENCE W/ 1 THREE-STRAND BARBED WIRE TOP TO ENCLOSE WATER PLANT SITE, AS PER SPECIFICATIONS.

G. FLOOD PLAN:

100 YEAR FLOOD ELEVATION 82' M.S.L. REFERENCE U.S.G.S. MAP OF FLOOD PRONE AREAS.

H. BENCHMARK:

"LL" ON F.V. AT SOUTHWEST CORNER OF THE INTERSECTION OF TEXAS STATE HWY. NO. 6 AND WESTHOLLOW DRIVE, ELEV. = 91.84 (1964 DATUM), ELEV. = 90.48 (1973 ADJUSTED DATUM).

I. ELEVATIONS:

PLAN ELEVATIONS ARE BASED ON 1964 U.S.C. & G.S. DATUM. AFTER VERIFICATION OF ELEVATIONS FOR THE EXISTING STORM AND WATER LINES, ADJUST ALL PIPE ELEVATIONS ACCORDINGLY.

J. COMPACTION AT TANKS

SOIL IS TO BE SELECT FILL, PLACE IN LAYERS OF NO MORE THAN NINE INCHES AND COMPACT TO 95% OF MODIFIED PROCTOR DENSITY PER ASTM D-1557 WITH 2% OPTIMUM MOISTURE CONTENT.

K. PLANT GRID N0+00, E0+00 EQUALS SHOPPING CENTER COORDINATES N6355.82, E7402.02, PLANT NORTH IS N01°56' 25"W, FEDERATED SHOPPING CENTER NORTH IS N02°16'32"W.

L. CONTRACTOR IS TO SUBMIT PAVEMENT JOINT LAYOUT FOR THE ACCESS ROAD PRIOR TO CONSTRUCTION.

M. ALL PIPE FITTINGS ABOVE GROUND SHALL BE FLANGED, BELOW GROUND PUSH ON FITTINGS SHALL BE USED.

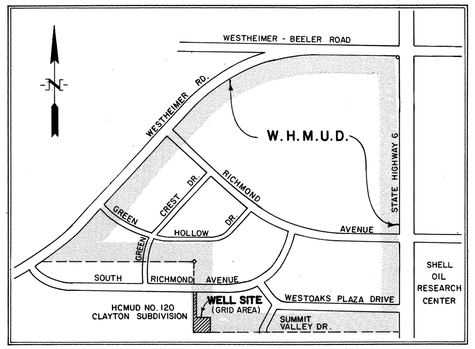

LOCATION MAP
NOT TO SCALE

CITY OF HOUSTON
DEPARTMENT OF PUBLIC WORKS

APPROVALS

WATER DESIGN — Brandagin 6-24-82
PAVING DEPT. — Stu Delany 7-6-82
WATER QUALITY — Wm G Williams 6-21-82
STORM SEWERS
ASSISTANT DIR. & CHIEF - WATER DIV. — Walter Prescott
SANITARY SEWERS
CHIEF ENG. - SEWER DIV.

OTHER DEPT'S. 7-19-82

TRAFFIC & TRANSPORTATION DEPT. — Randall Riley
CITY PLANNING DEPT.
WEST DIRECTOR OF PUBLIC WORKS
DIRECTOR OF PUBLIC WORKS

No.	Date	Revisions	App.

Lockwood, Andrews & Newnam, Inc.
Engineering·Architecture·Planning·Project Management

REGISTERED PROFESSIONAL ENGINEER CHARLES B. MIDDLEY 48166 STATE OF TEXAS

WATER PLANT No. 3

WEST HOUSTON MUNICIPAL UTILITY DISTRICT
WEST OAKS PLAZA, SECTION ONE
HARRIS COUNTY, TEXAS

PLANT LAYOUT

Scale: 1" = 10'
Date: JUNE, 1982
Designed by: Alan Boyer
Drawn by: Joe G. Zangy
Checked by: C B Middley
Approved by:
Project No. 1570-20-001-000

Sheet 2 of 13

W.P. 0238

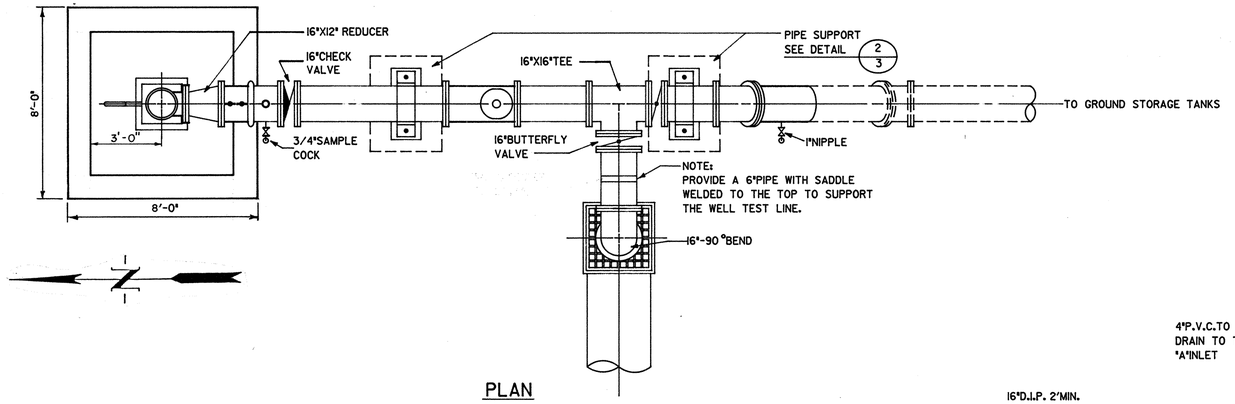

PLAN

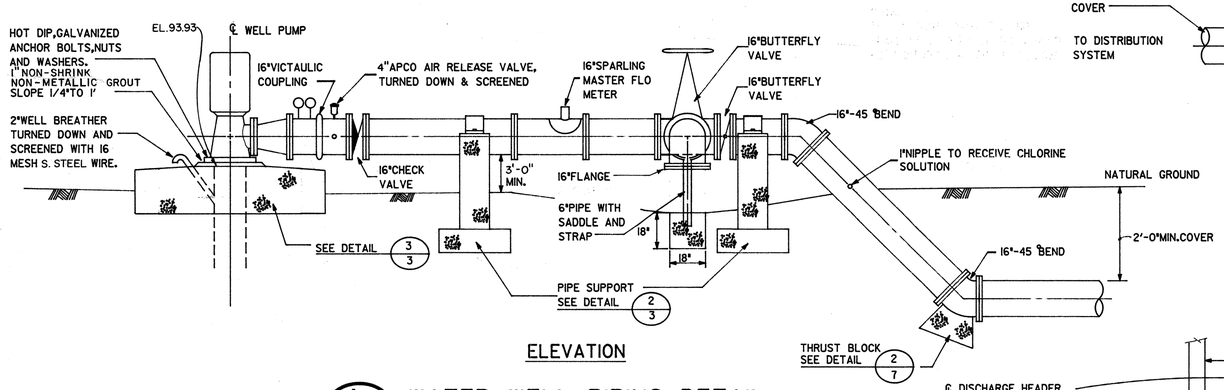

ELEVATION

1/3 WATER WELL PIPING DETAIL

1"=3'-0"

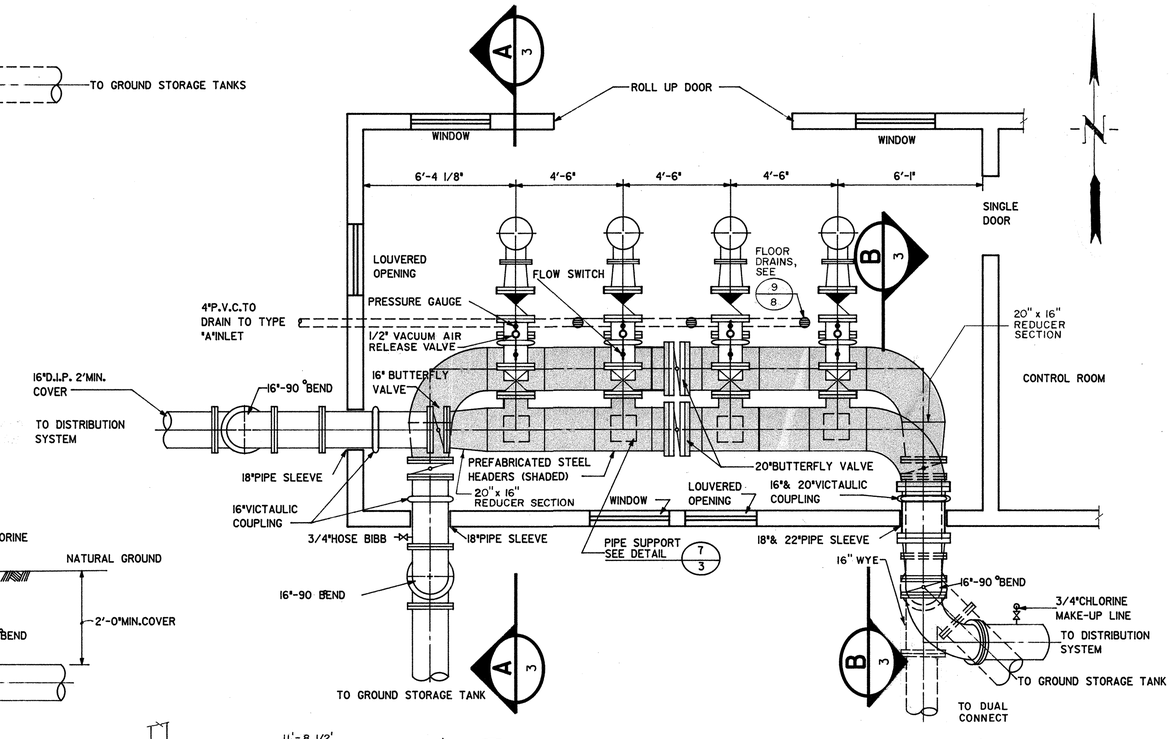

4/3 BOOSTER PUMPS - PLAN

1"=3'-0"

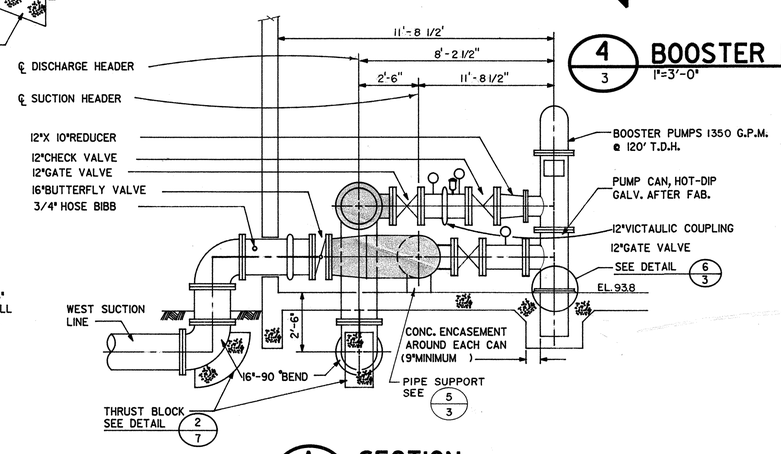

A/3 SECTION

1"=3'-0"

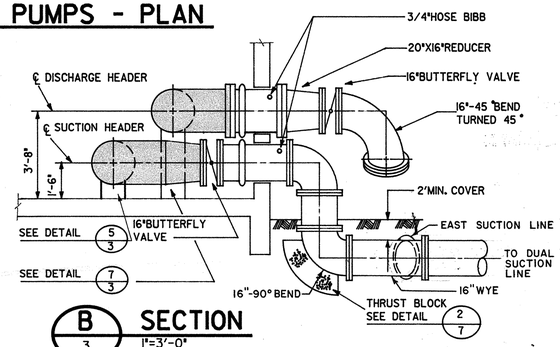

B/3 SECTION

1"=3'-0"

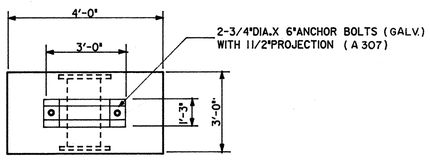

PLAN

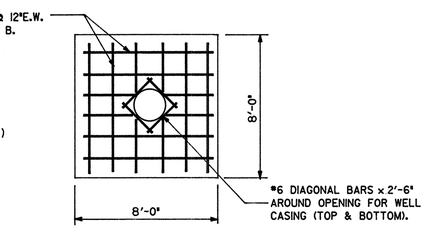

PLAN

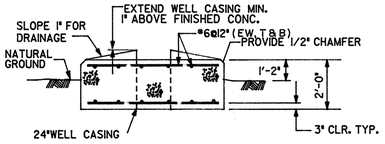

ELEVATION

3/3 WELL PUMP FOUNDATION DETAIL

N.T.S.

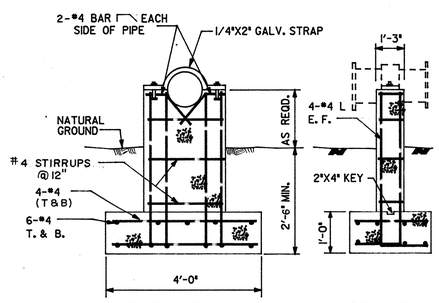

ELEVATION SECTION

2/3 PIPE SUPPORT DETAIL

N.T.S.

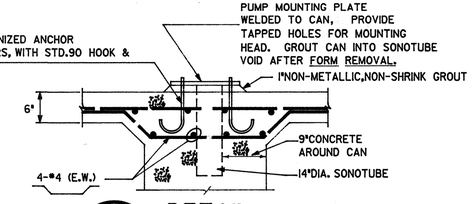

6/3 DETAIL

N.T.S.

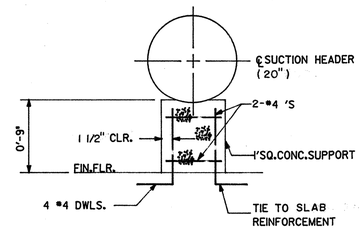

5/3 SUCTION HEADER PIPE SUPPORT(TYP.)

N.T.S. (4 REQ'D)

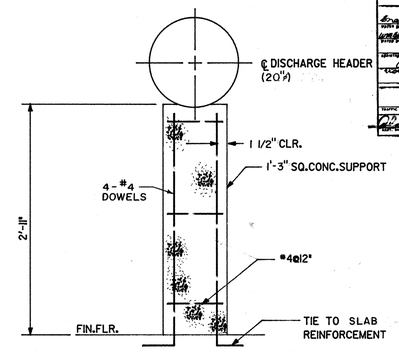

7/3 DISCHARGE HEADER PIPE SUPPORT(TYP.)

N.T.S. (4 REQ'D.)

CITY OF HOUSTON
DEPARTMENT OF PUBLIC WORKS
APPROVALS
OTHER DEPTS.

No.	Date	Revisions	App.

Lockwood, Andrews & Newnam, Inc.
Engineering-Architecture-Planning-Project Management

STATE OF TEXAS — CHARLES R. NEELEY — 48126 — REGISTERED PROFESSIONAL ENGINEER

WATER PLANT No. 3

WEST HOUSTON MUNICIPAL UTILITY DISTRICT
WEST OAKS PLAZA, SECTION ONE
HARRIS COUNTY, TEXAS

BOOSTER PUMP AND WELL DETAILS

Scale: AS SHOWN Date: JUNE,1982
Designed by: Ron Gage
Drawn by: Guy Gregston
Checked by: C. R. Neeley
Approved by:
Project No. 1570-20-001-000

Sheet 3 of 13

W.P. 0238

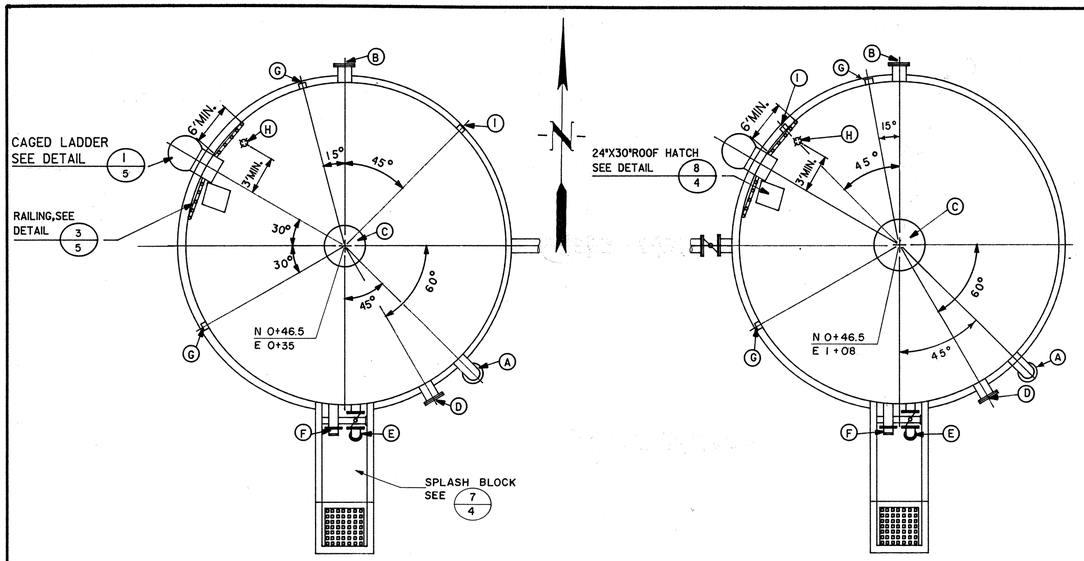

1/4 STORAGE TANK ORIENTATION
NOT TO SCALE

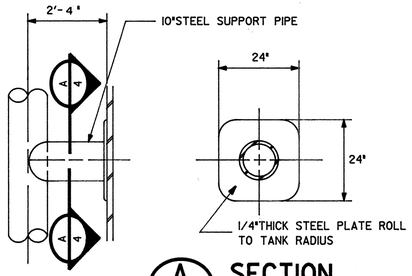

2/4 PIPE SUPPORT DETAIL
NOT TO SCALE

A/4 SECTION
NOT TO SCALE

STORAGE TANK OUTLET SCHEDULE						
ROTATION	NO. REQUIRED	SIZE	FITTING	℄ ELEV. ABOVE TANK BOTTOM	SERVICE	DETAIL
A	1	16"	P.E.	35'-0"	INLET	1/4
B	1	16"	FLG.	3'-0"	OUTLET	1/4
C	1	24"	—	℄ ROOF	VENT	1/4
D	1	24"	FLG.	3'-0"	MANWAY	1/4
E	1	16"	FLG.	0	DRAIN	1/4
F	1	16"	F.E.	AS REQ'D.	OVER-FLOW	1/4
G	2	3/4"	CPG.	3'-0"	SAMPLE TAP	—
H	1	3"	CPG.	ROOF	PROBES	—
I	1	1/2"	CPG.	2'-0"	LEVEL IND.	1/4

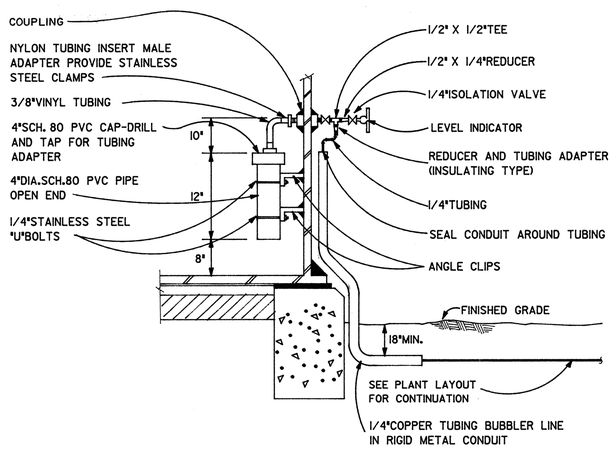

3/4 BUBBLER TUBE AND G.S.T. LEVEL INDICATOR CONNECTION DETAIL
NOT TO SCALE

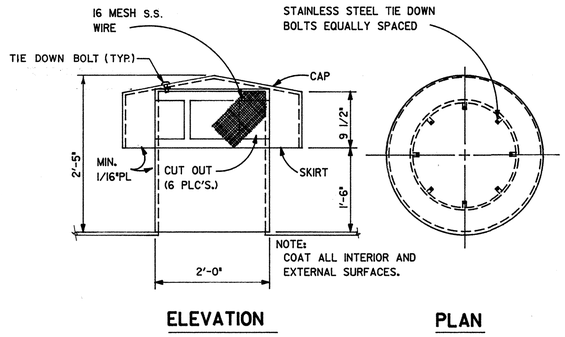

4/4 SCREEN ROOF VENT DETAIL
NOT TO SCALE

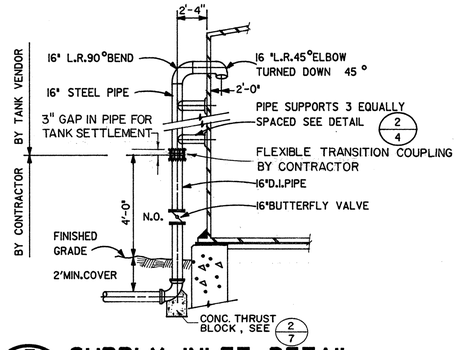

5/4 SUPPLY INLET DETAIL
NOT TO SCALE

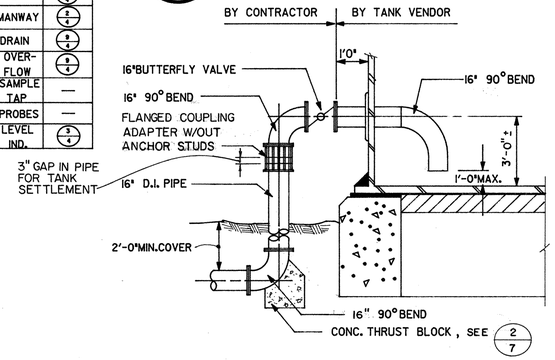

6/4 SUCTION LINE OUTLET DETAIL
NOT TO SCALE

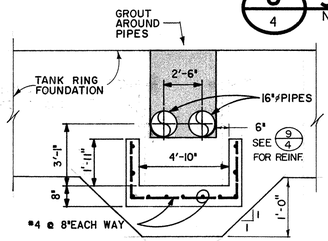

B/4 SECTION
NOT TO SCALE

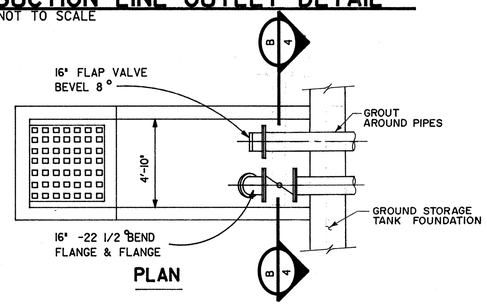

7/4 SPLASH BLOCK DETAIL
NOT TO SCALE

*NOTE: POUR SPLASH BLOCK AFTER TANK WATER TEST

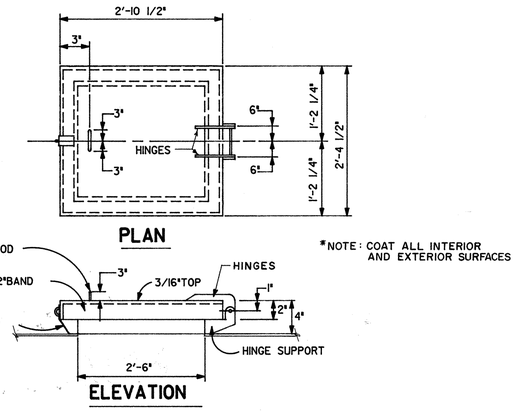

*NOTE: COAT ALL INTERIOR AND EXTERIOR SURFACES

8/4 ROOF HATCH DETAIL
NOT TO SCALE

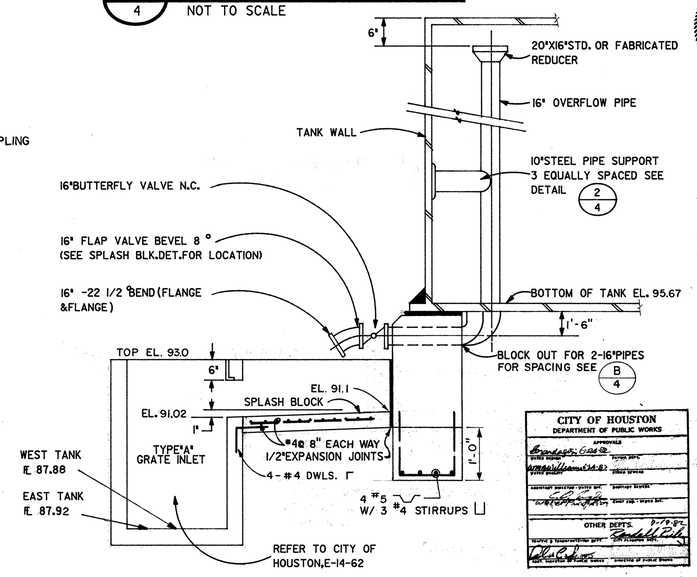

CITY OF HOUSTON
DEPARTMENT OF PUBLIC WORKS
APPROVALS
OTHER DEPTS.

9/4 OVERFLOW AND DRAIN PIPES
NOT TO SCALE

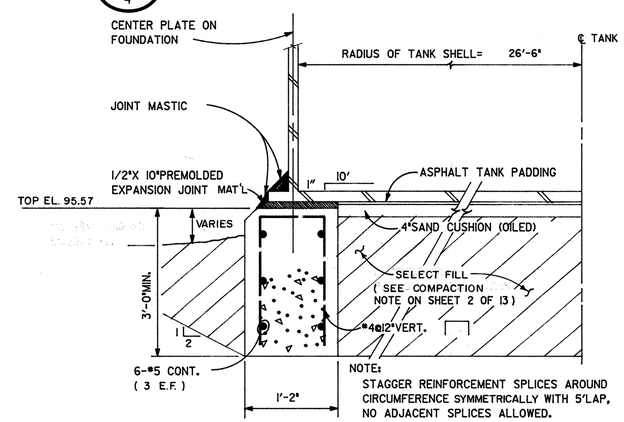

NOTE:
STAGGER REINFORCEMENT SPLICES AROUND CIRCUMFERENCE SYMMETRICALLY WITH 5' LAP, NO ADJACENT SPLICES ALLOWED.

10/4 GROUND STORAGE TANK FOUNDATION DETAIL
NOT TO SCALE

No.	Date	Revisions	App.

Lockwood, Andrews & Newnam, Inc.
Engineering-Architecture-Planning-Project Management

STATE OF TEXAS — CHARLES B. NIELSEN — REGISTERED PROFESSIONAL ENGINEER — 48126

WATER PLANT No. 3
WEST HOUSTON MUNICIPAL UTILITY DISTRICT
WEST OAKS PLAZA, SECTION ONE
HARRIS COUNTY, TEXAS

GROUND STORAGE TANK DETAILS

Scale: NONE | Date: JUNE, 1982
Designed by: Ron Sup
Drawn by: Gary Sugerstein
Checked by: CS Nielsen
Approved by:
Project No. 1570-20-001-000

Sheet 4 of 13

W.P. 0238

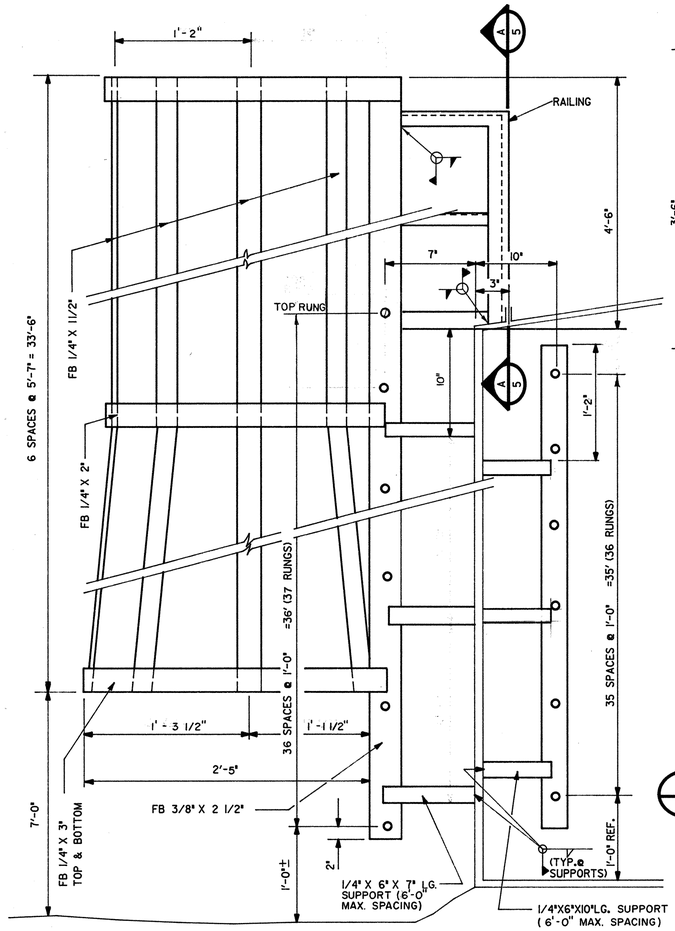

NOTE: HOT DIP GALV. LADDER, CAGE, & HANDRAIL AFTER FABRICATION.

1/5 STANDARD CAGED LADDER DETAIL
NOT TO SCALE

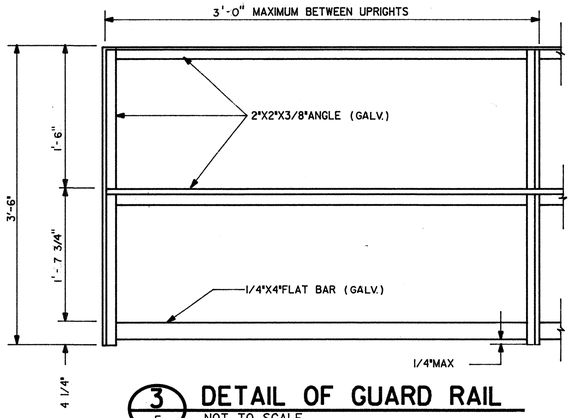

3/5 DETAIL OF GUARD RAIL
NOT TO SCALE

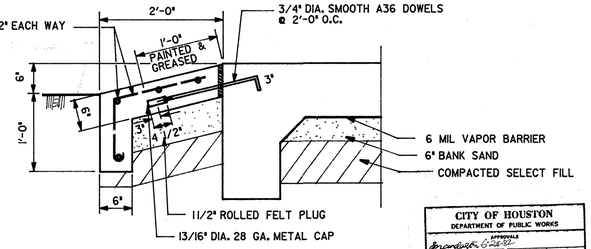

7/5 SECTION OF RAMP
NOT TO SCALE

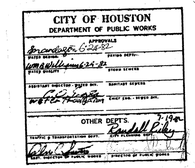

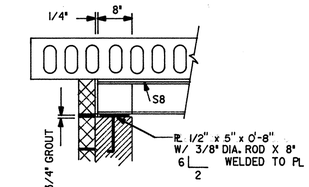

11/5 DETAIL
NOT TO SCALE

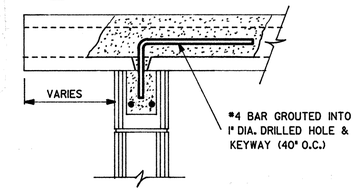

12/5 DETAIL
NOT TO SCALE

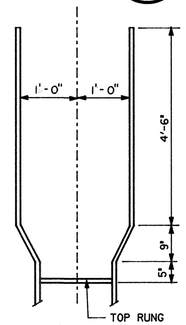

A/5 SECTION
NOT TO SCALE

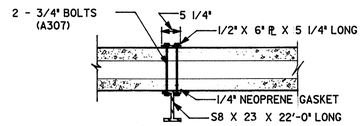

4/5 ATTACHMENT OF RUNWAY BEAM TO ROOF
NOT TO SCALE

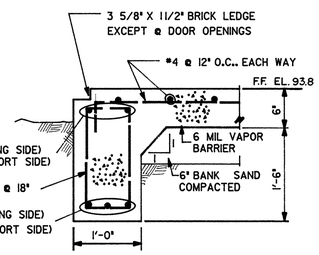

5/5 DETAIL
NOT TO SCALE

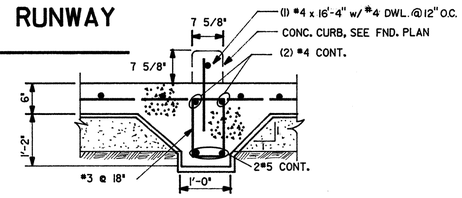

9/5 DETAIL
NOT TO SCALE

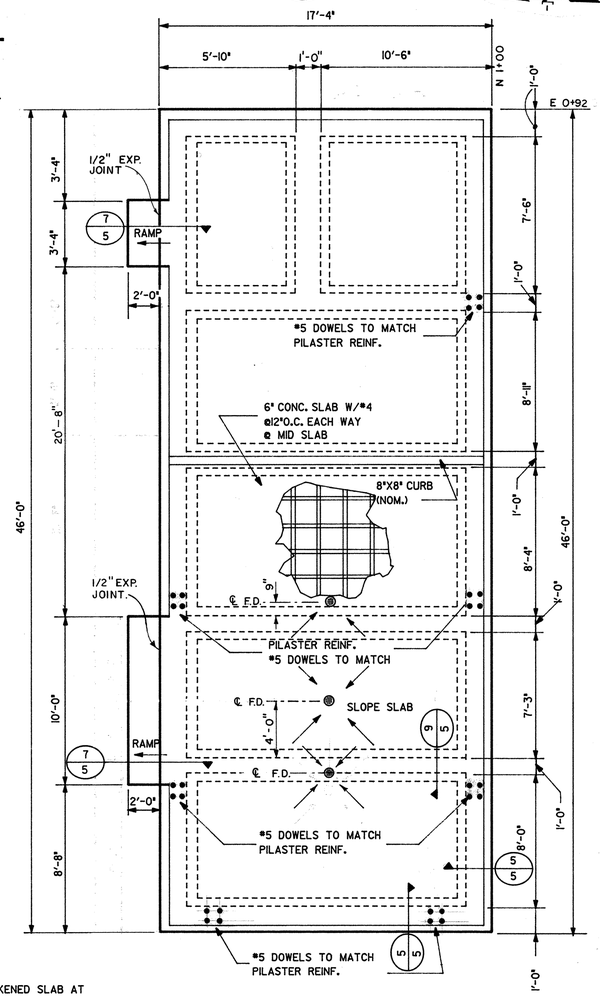

13/5 FOUNDATION PLAN
NOT TO SCALE

NOTE:
1. FOR THICKENED SLAB AT BOOSTER PUMP MOUNTING PLATE SEE DETAIL 6/3
2. FOR FLOOR DRAIN, SEE DETAIL 9/8

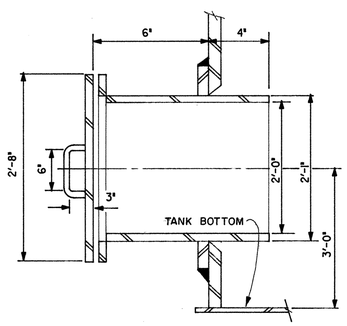

2/5 MANWAY DETAIL
NOT TO SCALE

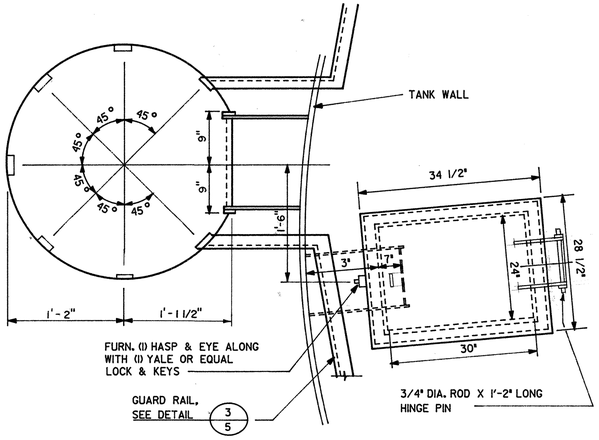

6/5 WALKWAY DETAIL
NOT TO SCALE

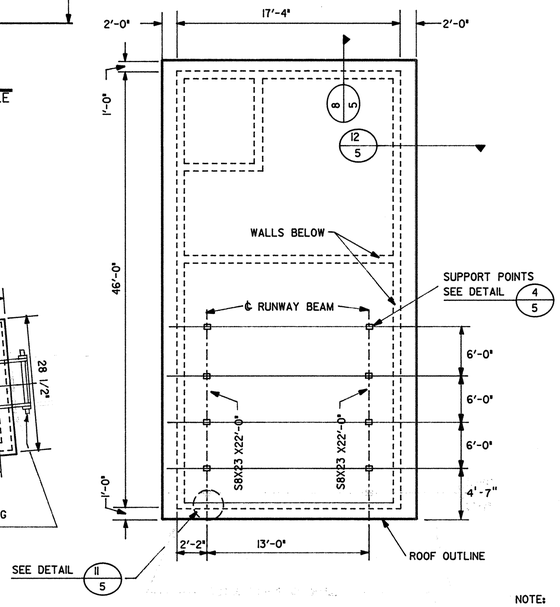

10/5 RUNWAY BEAM PLAN
NOT TO SCALE

No.	Date	Revisions	App.

Lockwood, Andrews & Newnam, Inc.
Engineering-Architecture-Planning-Project Management

STATE OF TEXAS — CHARLES R. MIDDLETON — 48184 — REGISTERED PROFESSIONAL ENGINEER

WATER PLANT No. 3

WEST HOUSTON MUNICIPAL UTILITY DISTRICT
WEST OAKS PLAZA, SECTION ONE
HARRIS COUNTY, TEXAS

GROUND STORAGE TANK AND MISCELLANEOUS DETAILS

Scale: NONE | Date: JUNE, 1982
Designed by: Ron Bass
Drawn by: Gary Gonzales
Checked by: Charles Middleton
Approved by:
Project No. 1570-20-001-000

Sheet 5 of 13

W.P. 0238

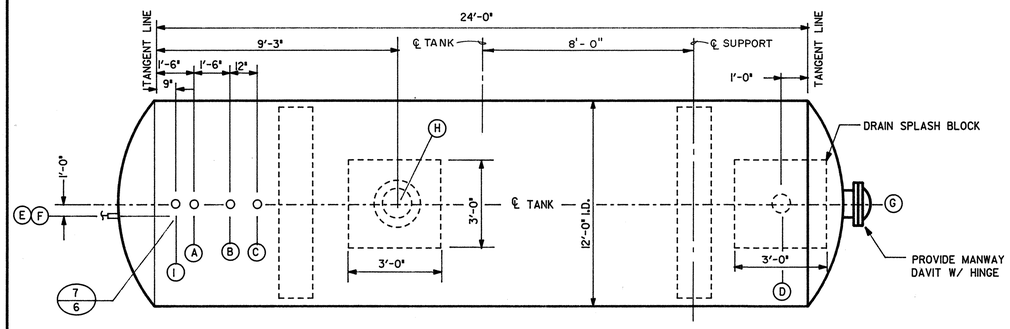

1/6 PLAN
NOT TO SCALE

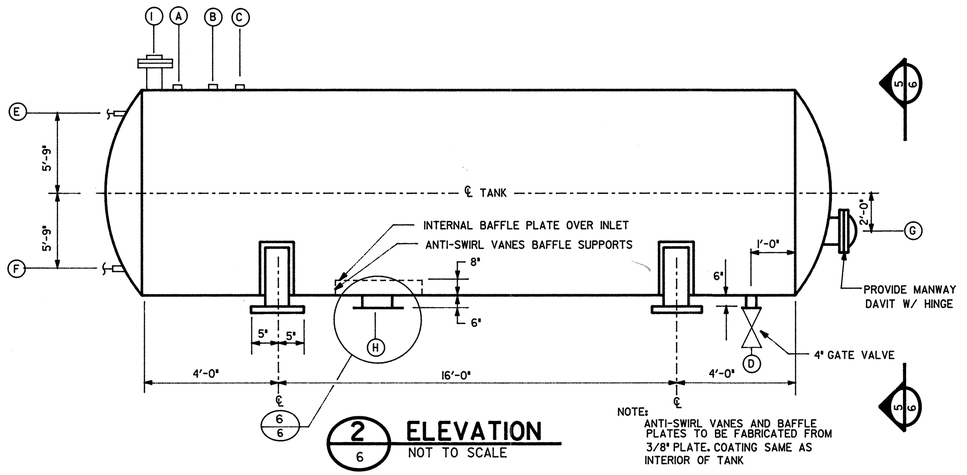

2/6 ELEVATION
NOT TO SCALE

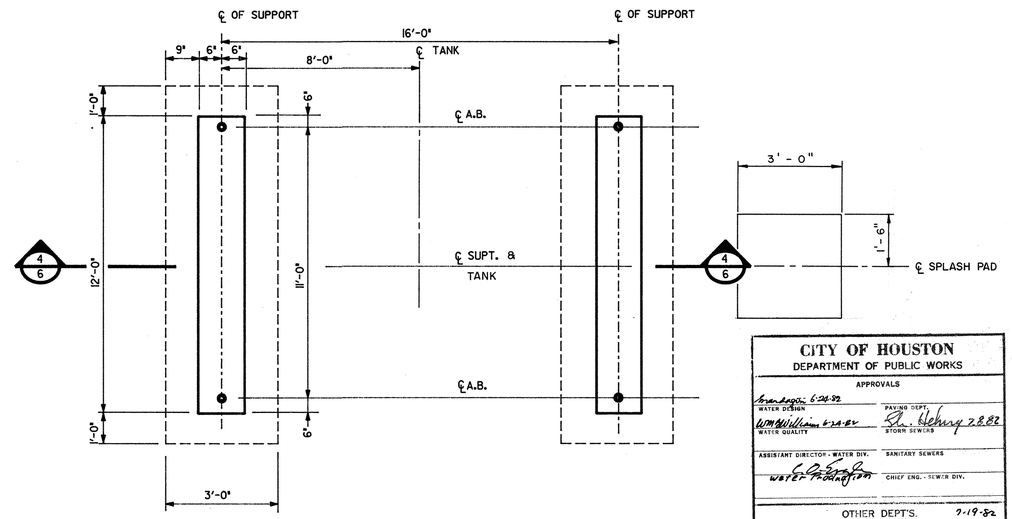

3/6 HYDROPNUEMATIC TANK FOUNDATION PLAN
NOT TO SCALE

CITY OF HOUSTON
DEPARTMENT OF PUBLIC WORKS
APPROVALS
WATER DIVISION — WATER QUALITY — PAVING DEPT. — STORM SEWERS
ASSISTANT DIRECTOR - WATER DIV. — SANITARY SEWERS
CHIEF ENG. - SEWER DIV.
OTHER DEPT'S.
TRAFFIC & TRANSPORTATION DEPT. — CITY PLANNING DEPT.
ASST. DIRECTOR OF PUBLIC WORKS — DIRECTOR OF PUBLIC WORKS

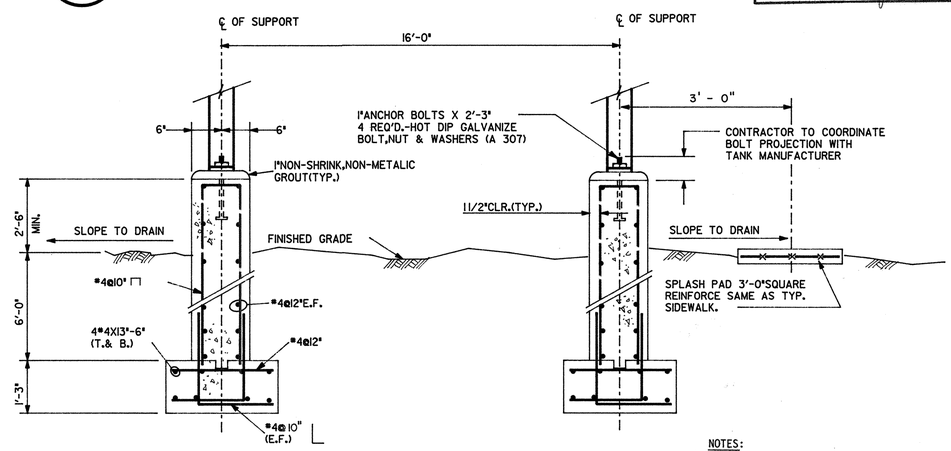

4/6 SECTION
NOT TO SCALE

NOTES:

1. ALL MEASUREMENTS FROM BOTTOM OF TANK.
2. INSULATED EXTERIOR METAL PIPING WITH 1-1/2" HIGH DENSITY FIBERGLASS INSULATION WITH KRAFT PAPER BACKING-WATERPROOF WITH BITUMINOUS COATING.
3. PROTECT 3/4" PLASTIC SIGHT TUBE BY ENCASING IT IN 2" PLASTIC TUBING SO AS TO LEAVE AN AIR GAP BETWEEN THE TWO.

WATER PLANT NO. 3 HYDROPNEUMATIC TANK NOZZLE SCHEDULE					
MARK	NO. REQ'D.	SIZE	RATING	TYPE	SERVICE
A	1	1"	3000	HALF-CPLG. TD.	AIR INLET / AIR DUMP
B	1	2"	3000	FLG.	PRESS SAFETY VALVE
C	1	1"	3000	HALF-CPLG. TD.	PRESS. SENSING
D	1	4"	ANSI B16.1 125FF	FLG.	DRAIN
E,F	2	1"	3000	HALF-CPLG. TD.	SIGHT TUBE CONN.
G	1	24"	ANSI B16.1 125FF	FLG.	MANHOLE W/ BLIND FLG. AND HINGED DAVIT
H	1	16"	ANSI B16.1 125FF	FLG.	WATER INLET / OUTLET
I	1	4"	ANSI B16.1 125FF	FLG.	PROBE WELL

HYDROPNEUMATIC TANKS

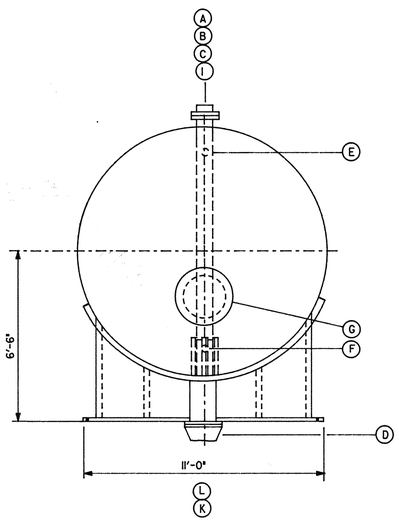

5/6 END VIEW
NOT TO SCALE

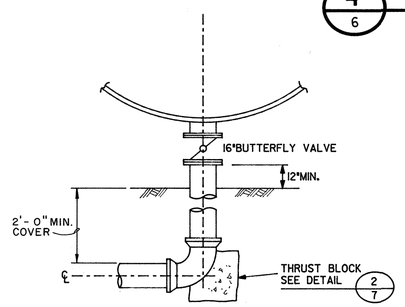

6/6 DETAIL
NOT TO SCALE

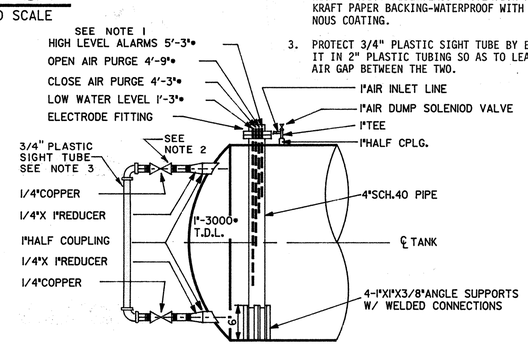

7/6 DETAIL
NOT TO SCALE

No.	Date	Revisions	App.

Lockwood, Andrews & Newnam, Inc.
Engineering-Architecture-Planning-Project Management

STATE OF TEXAS — CHARLES R. NEELY — 48126 — REGISTERED PROFESSIONAL ENGINEER

WATER PLANT No. 3
WEST HOUSTON MUNICIPAL UTILITY DISTRICT
WEST OAKS PLAZA, SECTION ONE
HARRIS COUNTY, TEXAS

HYDROPNEUMATIC TANK DETAILS

Scale: NONE — Date: JUNE, 1982
Designed by:
Drawn by:
Checked by:
Approved by:
Project No. 1570-20-001-000

Sheet 6 of 13

W.P. 0238

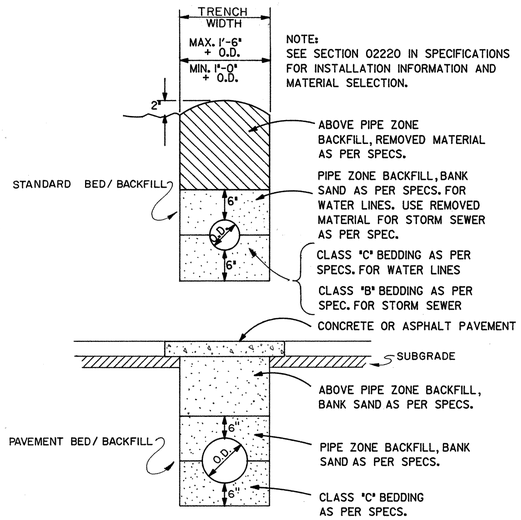

1/7 PLANT PIPING BEDDING DETAILS

NOT TO SCALE

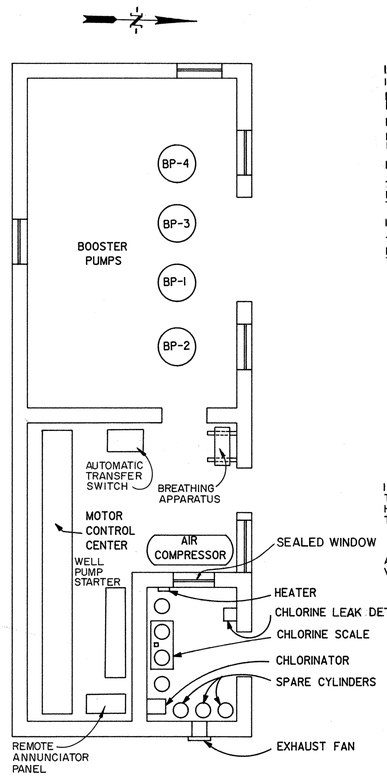

3/7 BOOSTER PUMP & CONTROL BUILDING EQUIPMENT LAYOUT

NOT TO SCALE

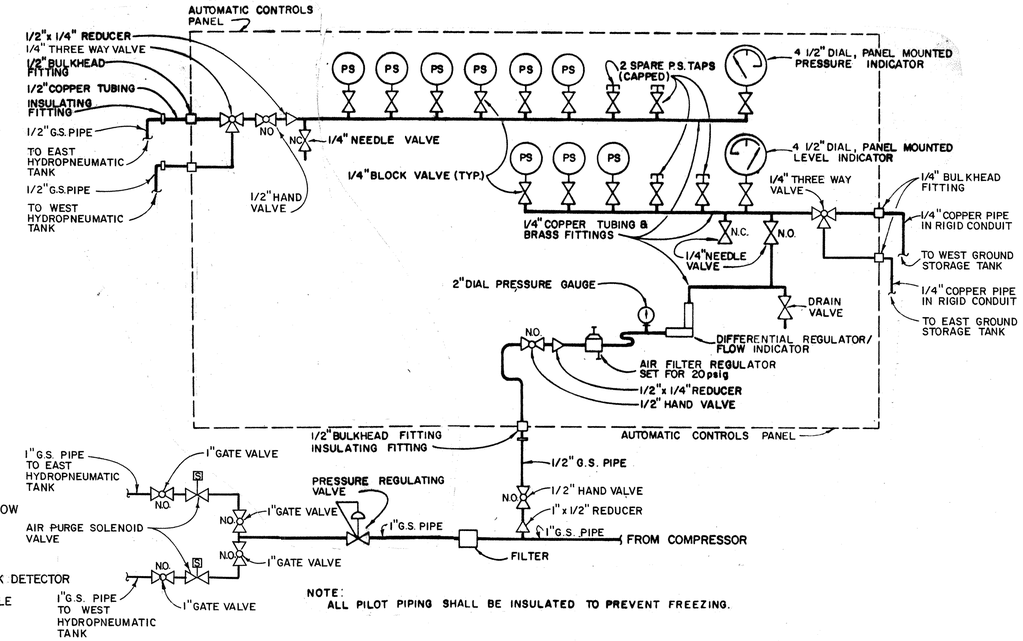

5/7 SCHEMATIC - GROUND STORAGE TANK, LEVEL CONTROL & BOOSTER PUMPS PRESSURE CONTROL

NOT TO SCALE

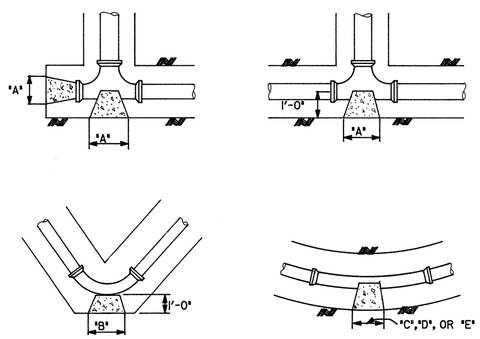

NOTE:

1. HEIGHTS OF ALL BLOCKS SHALL BE EQUAL TO THE "A", "B", "C", "D", OR "E" DIMENSION CALLED FOR.
2. ALL CONCRETE TO BE POURED AGAINST FIRM UNDISTURBED SOIL.

PIPE SIZE	"A" PLUGS & TEES	"B" 90° BEND	"C" 45° BEND	"D" 22° 30' BEND	"E" 11° 15' BEND
6"	1'-0"	1'-2"	1'-2"	1'-2"	1'-2"
8"	1'-3"	1'-6"	1'-6"	1'-6"	1'-6"
10"	2'-0"	2'-3"	2'-0"	2'-0"	2'-0"
12"	2'-8"	3'-0"	2'-3"	2'-3"	2'-3"
16"	3'-6"	4'-3"	3'-0"	2'-6"	2'-6"

2/7 THRUST BLOCK DETAIL

NOT TO SCALE

NOTES:

1. FLOAT SWITCH & TRANSFER PUMP CONNECTED TO EMERGENCY POWER CIRCUIT.
2. FLOAT SWITCH WILL STOP TRANSFER PUMP AT HIGH LIQUID LEVEL & START IT AT LOW LIQUID LEVEL.
3. FURNISHED WITH EMERGENCY GENERATOR.

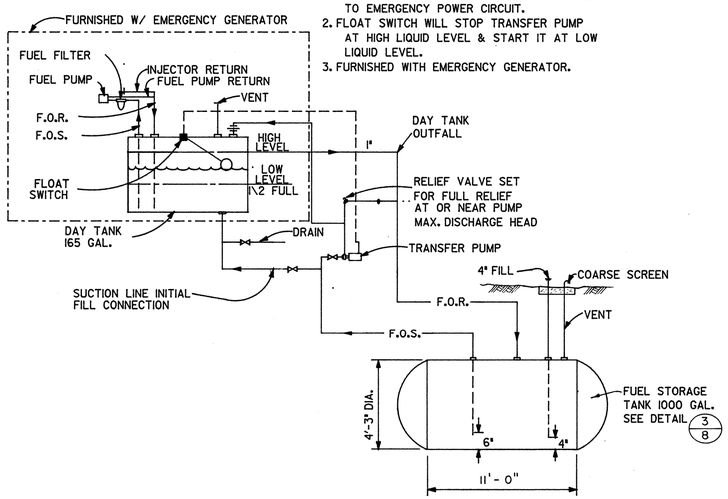

4/7 EMERGENCY GENERATOR FUEL OIL PIPING SCHEMATIC

NOT TO SCALE

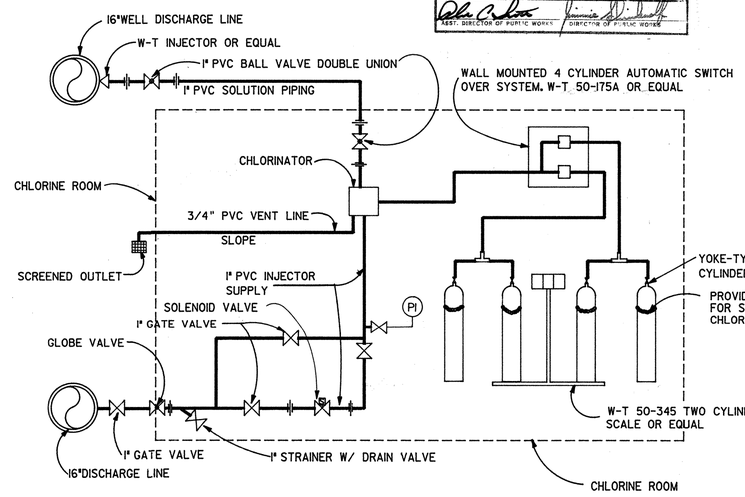

6/7 CHLORINATION SCHEMATIC

NOT TO SCALE

CITY OF HOUSTON
DEPARTMENT OF PUBLIC WORKS
APPROVALS
WATER DESIGN — PAVING DEPT.
WATER QUALITY — STORM SEWERS
ASSISTANT DIRECTOR - WATER DIV. — SANITARY SEWERS
CHIEF ENG. - SEWER DIV.
OTHER DEPT'S.
TRAFFIC & TRANSPORTATION DEPT. — CITY PLANNING DEPT.
ASST. DIRECTOR OF PUBLIC WORKS — DIRECTOR OF PUBLIC WORKS

No. | Date | Revisions | App.

Lockwood, Andrews & Newnam, Inc.
Engineering-Architecture-Planning-Project Management

WATER PLANT No. 3
WEST HOUSTON MUNICIPAL UTILITY DISTRICT
WEST OAKS PLAZA, SECTION I
HARRIS COUNTY, TEXAS

MISCELLANEOUS DETAILS

Scale: NONE | Date: JUNE, 1982
Designed by: Ron Burp
Drawn by: Joe A. Gonzales
Checked by: CS Neely
Approved by:
Project No. 1570-20-001-000

Sheet 7 of 13

W.P. 0238

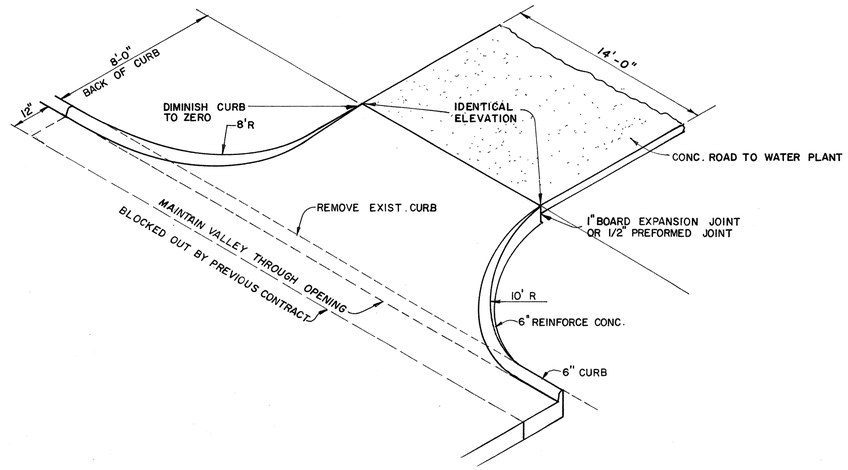

1/8 INTERSECTION DETAIL
N.T.S.

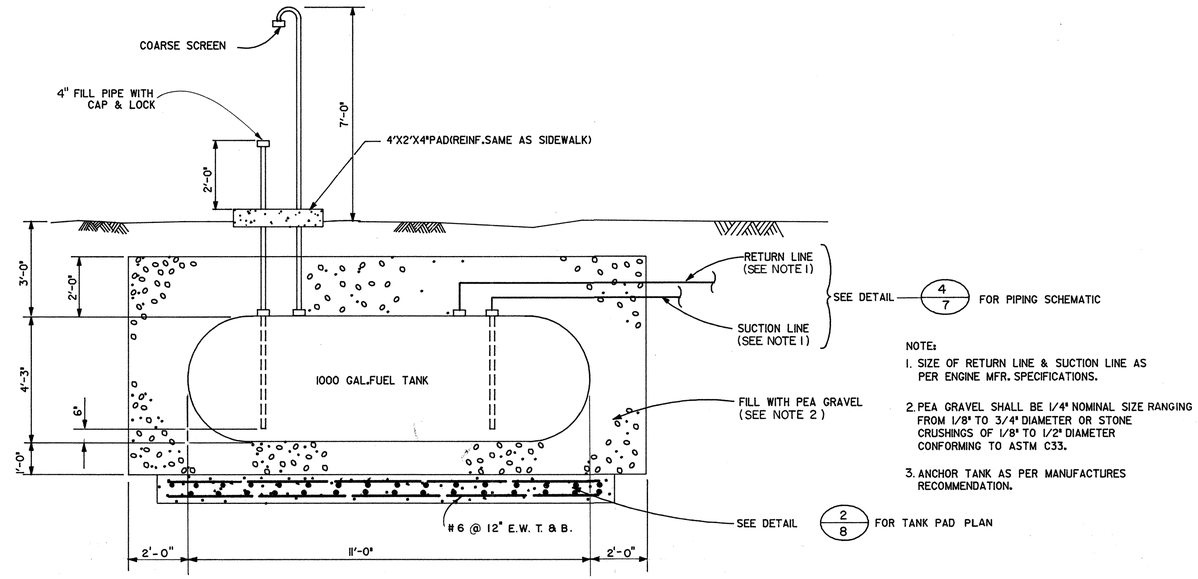

NOTES:
1. SIZE OF RETURN LINE & SUCTION LINE AS PER ENGINE MFR. SPECIFICATIONS.
2. PEA GRAVEL SHALL BE 1/4" NOMINAL SIZE RANGING FROM 1/8" TO 3/4" DIAMETER OR STONE CRUSHINGS OF 1/8" TO 1/2" DIAMETER CONFORMING TO ASTM C33.
3. ANCHOR TANK AS PER MANUFACTURES RECOMMENDATION.

3/8 FUEL OIL TANK DETAIL
N.T.S.

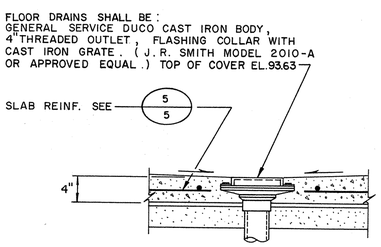

9/8 DRAIN DETAIL
N.T.S.

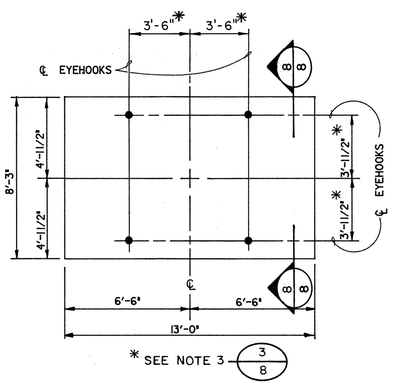

2/8 1000 GALLON TANK PAD
N.T.S.

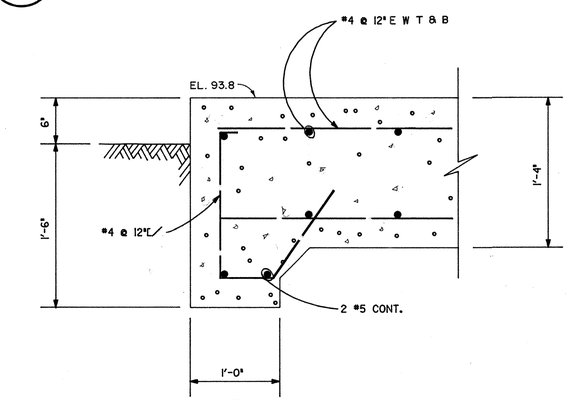

4/8 SECTION
N.T.S.

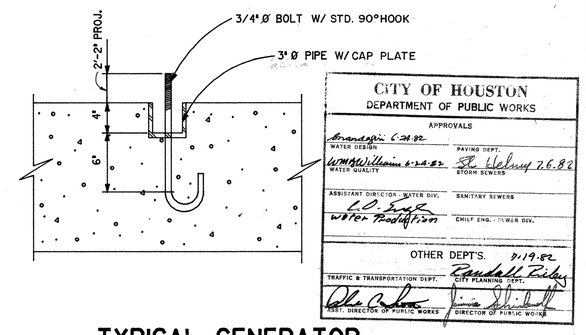

5/8 TYPICAL GENERATOR FOUNDATION BOLT
N.T.S.

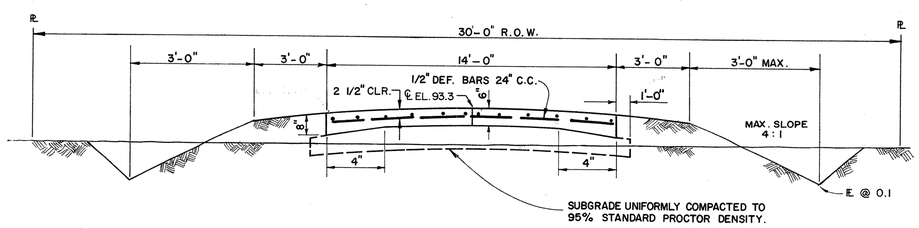

6/8 TYPICAL PAVING SECTION
N.T.S.

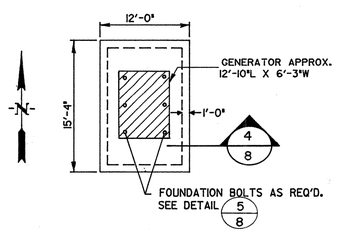

7/8 GENERATOR BASE
N.T.S.

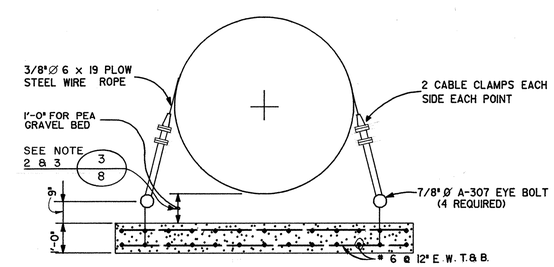

8/8 SECTION
N.T.S.

No.	Date	Revisions	App.

Lockwood, Andrews & Newnam, Inc.
Engineering · Architecture · Planning · Project Management

STATE OF TEXAS — CHARLES B. NEELY — 48126 — REGISTERED PROFESSIONAL ENGINEER

WATER PLANT No. 3

WEST HOUSTON MUNICIPAL UTILITY DISTRICT
WEST OAKS PLAZA, SECTION ONE
HARRIS COUNTY, TEXAS

MISCELLANEUS DETAILS

Scale: NONE | Date: JUNE, 1982
Designed by: Ron Bupp
Drawn by: C. Gomez
Checked by: C.B. Neely
Approved by:
Project No. 1570-20-001-000

Sheet 8 of 13

W.P. 0238

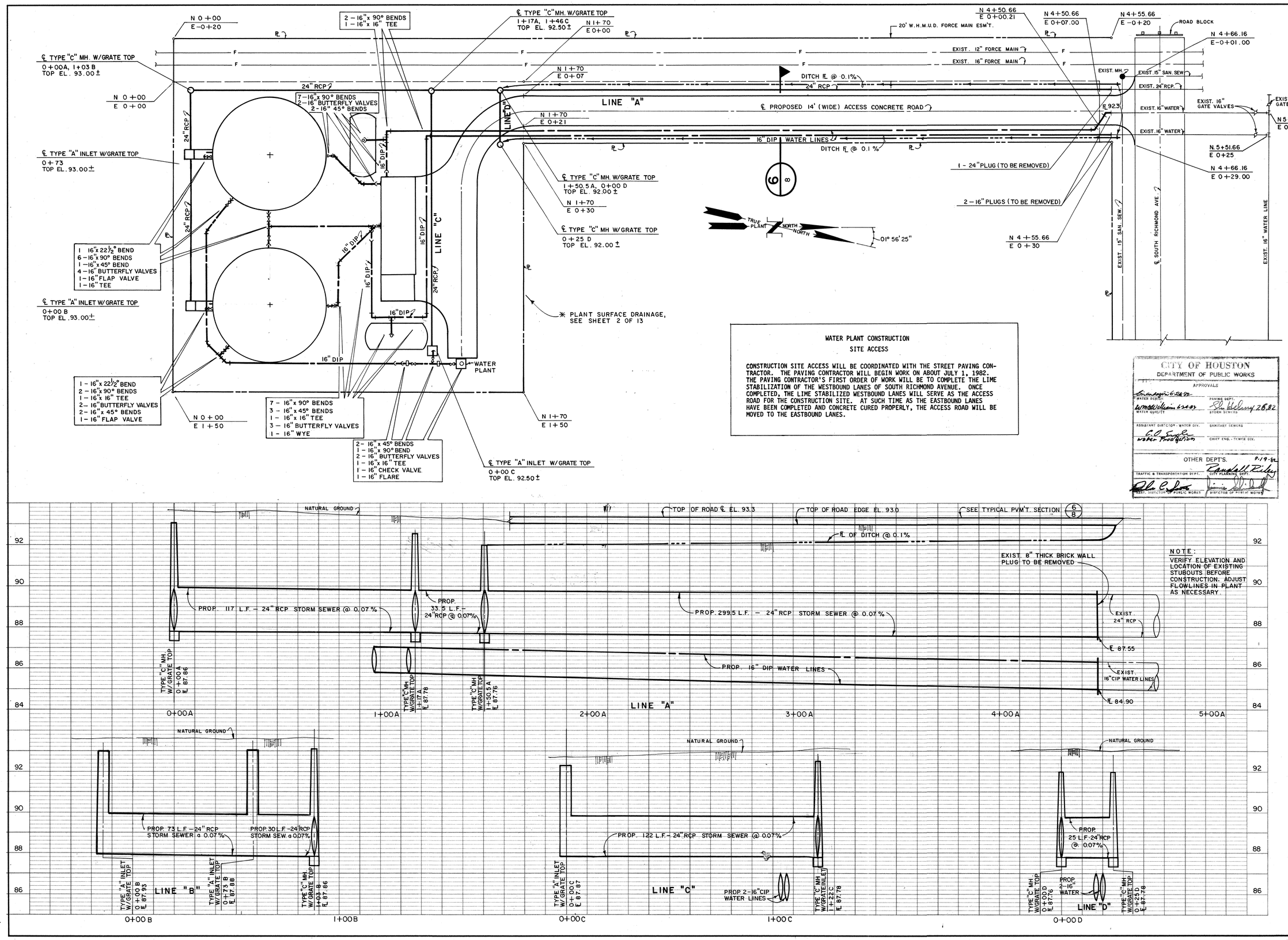

NOTE:
VERIFY ELEVATION AND LOCATION OF EXISTING STUBOUTS BEFORE CONSTRUCTION. ADJUST FLOWLINES IN PLANT AS NECESSARY.

WATER PLANT CONSTRUCTION

SITE ACCESS

CONSTRUCTION SITE ACCESS WILL BE COORDINATED WITH THE STREET PAVING CONTRACTOR. THE PAVING CONTRACTOR WILL BEGIN WORK ON ABOUT JULY 1, 1982. THE PAVING CONTRACTOR'S FIRST ORDER OF WORK WILL BE TO COMPLETE THE LIME STABILIZATION OF THE WESTBOUND LANES OF SOUTH RICHMOND AVENUE. ONCE COMPLETED, THE LIME STABILIZED WESTBOUND LANES WILL SERVE AS THE ACCESS ROAD FOR THE CONSTRUCTION SITE. AT SUCH TIME AS THE EASTBOUND LANES HAVE BEEN COMPLETED AND CONCRETE CURED PROPERLY, THE ACCESS ROAD WILL BE MOVED TO THE EASTBOUND LANES.

CITY OF HOUSTON
DEPARTMENT OF PUBLIC WORKS

APPROVALS

WATER DESIGN 6-24-82	PAVING DEPT. 6-28-82
WATER QUALITY 6-24-82	STORM SEWERS
ASSISTANT DIR'CTOR - WATER DIV.	SANITARY SEWERS
WATER PRODUCTION	CHIEF ENG. - SEWER DIV.
OTHER DEPT'S. 9-19-82	
TRAFFIC & TRANSPORTATION DEPT.	CITY PLANNING DEPT.
ASST. DIRECTOR OF PUBLIC WORKS	DIRECTOR OF PUBLIC WORKS

No.	Date	Revisions	App.

Lockwood, Andrews & Newnam, Inc.
Engineering • Architecture • Planning • Project Management

STATE OF TEXAS
CHARLES B. NEELEY
48726
REGISTERED PROFESSIONAL ENGINEER

WATER PLANT No. 3

HOUSTON MUNICIPAL UTILITY DISTRICT
WEST OAKS PLAZA, SECTION ONE
HARRIS COUNTY, TEXAS

PROPOSED DRAINAGE

Scale: 1"=20'H; 1"=2'V Date: JUNE, 1982
Designed by: Ron Bryce
Drawn by: Joe G. Langston
Checked by: C B Neeley
Approved by:
Project No. 1570-20-001-000

Sheet 9 of 13

W.P. 0238

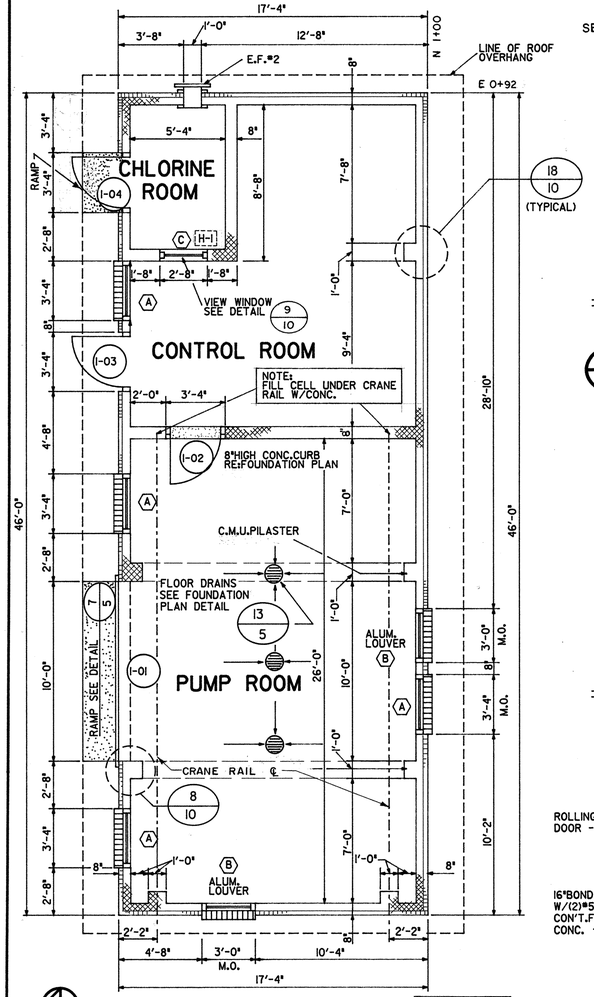

1/10 FLOOR PLAN
1/4"=1'-0"

FINISHED FLOOR EL. 93.8

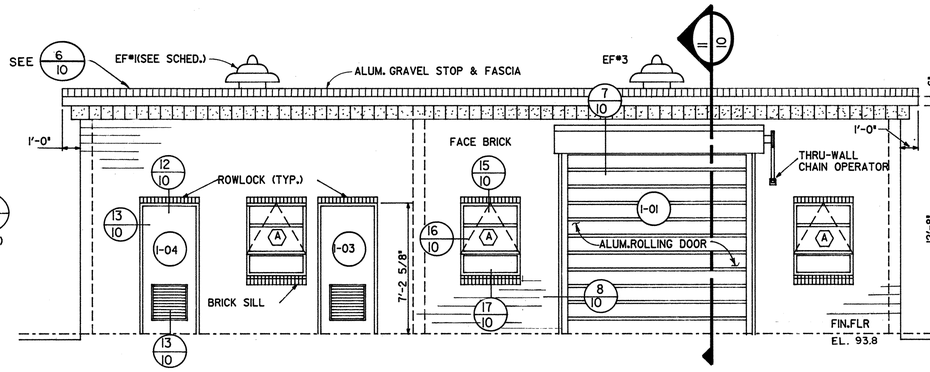

2/10 NORTH ELEVATION
1/4"=1'-0"

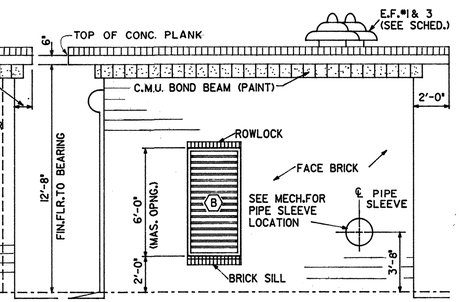

3/10 WEST ELEVATION
1/4"=1'-0"

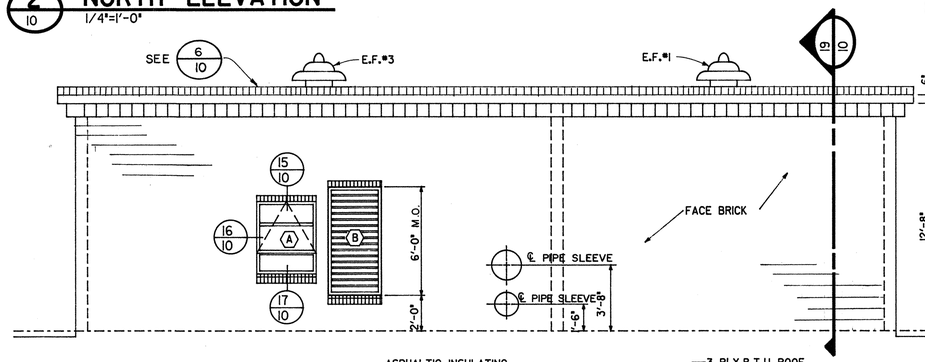

4/10 SOUTH ELEVATION
1/4"=1'-0"

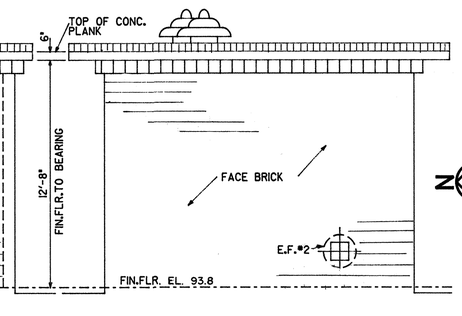

5/10 EAST ELEVATION
1/4"=1'-0"

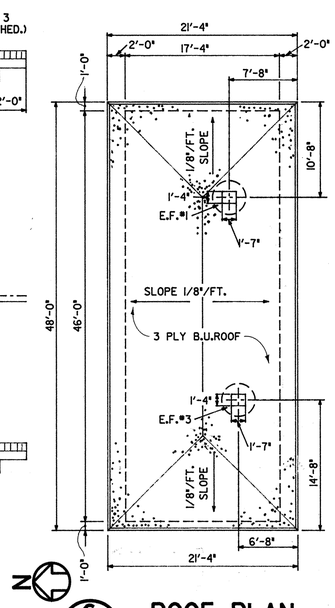

6/10 ROOF PLAN
1/8"=1'-0"

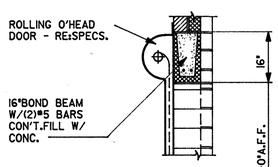

7/10 HEAD
1/2"=1'-0"

CITY OF HOUSTON
DEPARTMENT OF PUBLIC WORKS
APPROVALS
OTHER DEPTS.

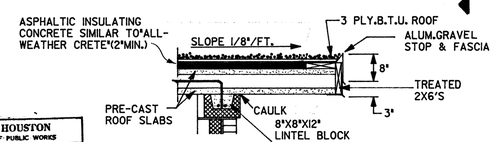

10/10 DETAIL
1/2"=1'-0"

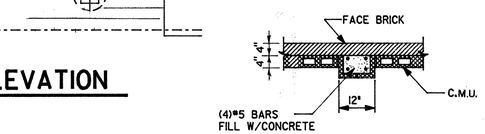

18/10 PILASTER DETAIL
1/2"=1'-0"

HEATER SCHEDULE			
MARK	KW	VOLTAGE	REMARKS
H-1	2	206/240	CHROMOLOX CSF-220

EXHAUST FAN SCHEDULE					
MARK	RPM	HP	CFM	SP	REMARKS
EF-1	1750	1/6	1400	.125	ACME PR504
EF-2	1505	1/22	600	.125	ACME PW76
EF-3	469	1	8035	.375	ACME P33J

DOOR SCHEDULE										
DOOR					FRAME		DETAILS			REMARKS
MARK	SIZE	THK.	TYPE	MAT'L.	TYPE	MAT'L.	HEAD	JAMB	SILL	
I-01	10'-0"X10'-0"	-	C	ALUM.	-	-	7/10	8/10	-	RE:SPECS.
I-02	3'-0"X7'-0"	13/4"	D	ALUM.	1	ALUM.	12/10	13/10	-	
I-03	DO	DO	D	DO	DO	DO	12/10	13/10	14/10	ALUM.THRESH
I-04	DO	DO	D	DO	DO	DO	DO	DO	DO	DO

WINDOW & LOUVER SCHEDULE							
MARK	SIZE	TYPE	MAT'L.	HEAD	JAMB	SILL	REMARKS
(A)	3'-4"X4'-0"	PROJECTED	ALUM.	15/10	16/10	17/10	1/4"LEXAN
(B)	2'-11"X5'-11"	FIXED	ALUM.	-	-	-	RE:SPECS.
(C)	2'-7 1/2"X2'-11 1/2"	DO	ALUM.FRAME	9/10	9/10	9/10	1/4"LEXAN

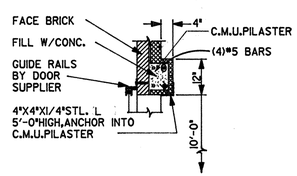

8/10 JAMB
1/2"=1'-0"

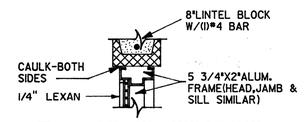

9/10 VIEW WINDOW
NOT TO SCALE

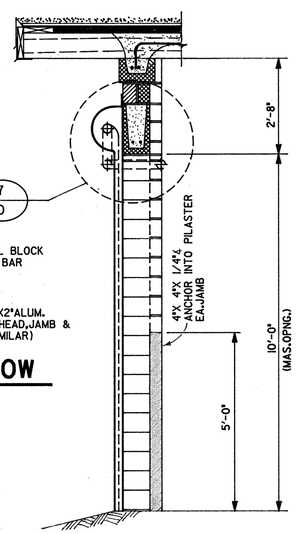

11/10 WALL SECTION
1/2"=1'-0"

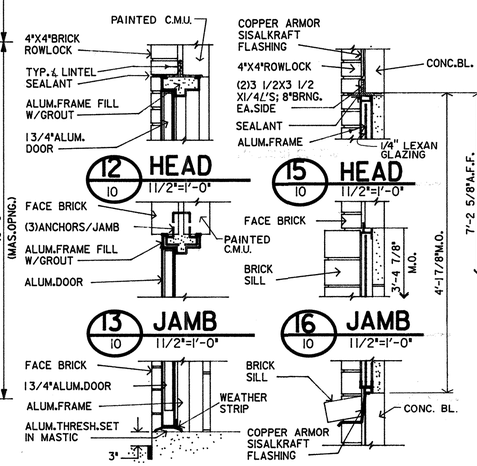

12/10 HEAD
1 1/2"=1'-0"

15/10 HEAD
1 1/2"=1'-0"

13/10 JAMB
1 1/2"=1'-0"

16/10 JAMB
1 1/2"=1'-0"

14/10 SILL
1 1/2"=1'-0"

17/10 SILL
1 1/2"=1'-0"

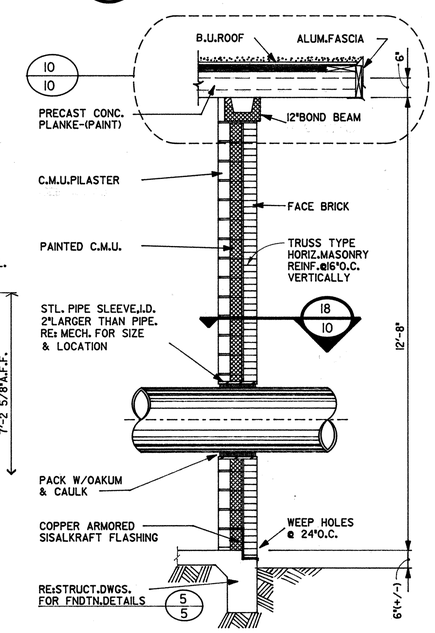

19/10 TYPICAL WALL SECTION
1/2"=1'-0"

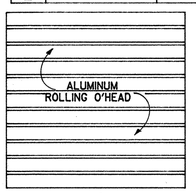

(C) DOOR TYPES

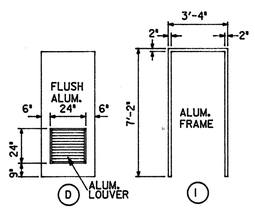

(D) (I) FRAME TYPE

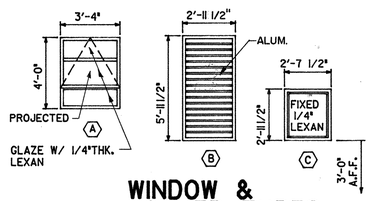

WINDOW & LOUVER TYPES

No.	Date	Revisions	App.

Lockwood, Andrews & Newnam, Inc.
Engineering-Architecture-Planning-Project Management

TEXAS REGISTERED PROFESSIONAL ENGINEER 48126 CHARLES R. NUELLY

WATER PLANT No. 3

WEST HOUSTON MUNICIPAL UTILITY DISTRICT
WEST OAKS PLAZA, SECTION ONE
HARRIS COUNTY, TEXAS

BOOSTER PUMPS & CONTROL ROOM PLANS AND DETAILS

Scale: AS SHOWN Date: JUNE, 1982
Designed by:
Drawn by:
Checked by:
Approved by:
Project No. 1570-20-001-000

Sheet 10 of 13

W.P. 0238

NOTES:

1. RUN WIRES FOR ROTATING BEACON AND AREA LIGHT IN SAME 1" CONDUIT FROM AUTOMATIC CONTROL SECTION IN MCC.
2. SERVICE POLE MUST BE LOCATED WITHIN 25' OF HL&P TERMINAL POLE.
3. COORDINATE UNDERGROUND CONDUIT RUNS WITH PIPING CONTRACTOR.
4. STUB UP LOCATION OF CONDUITS AT GENERATOR TO BE DETERMINED AFTER GENERATOR IS SELECTED.

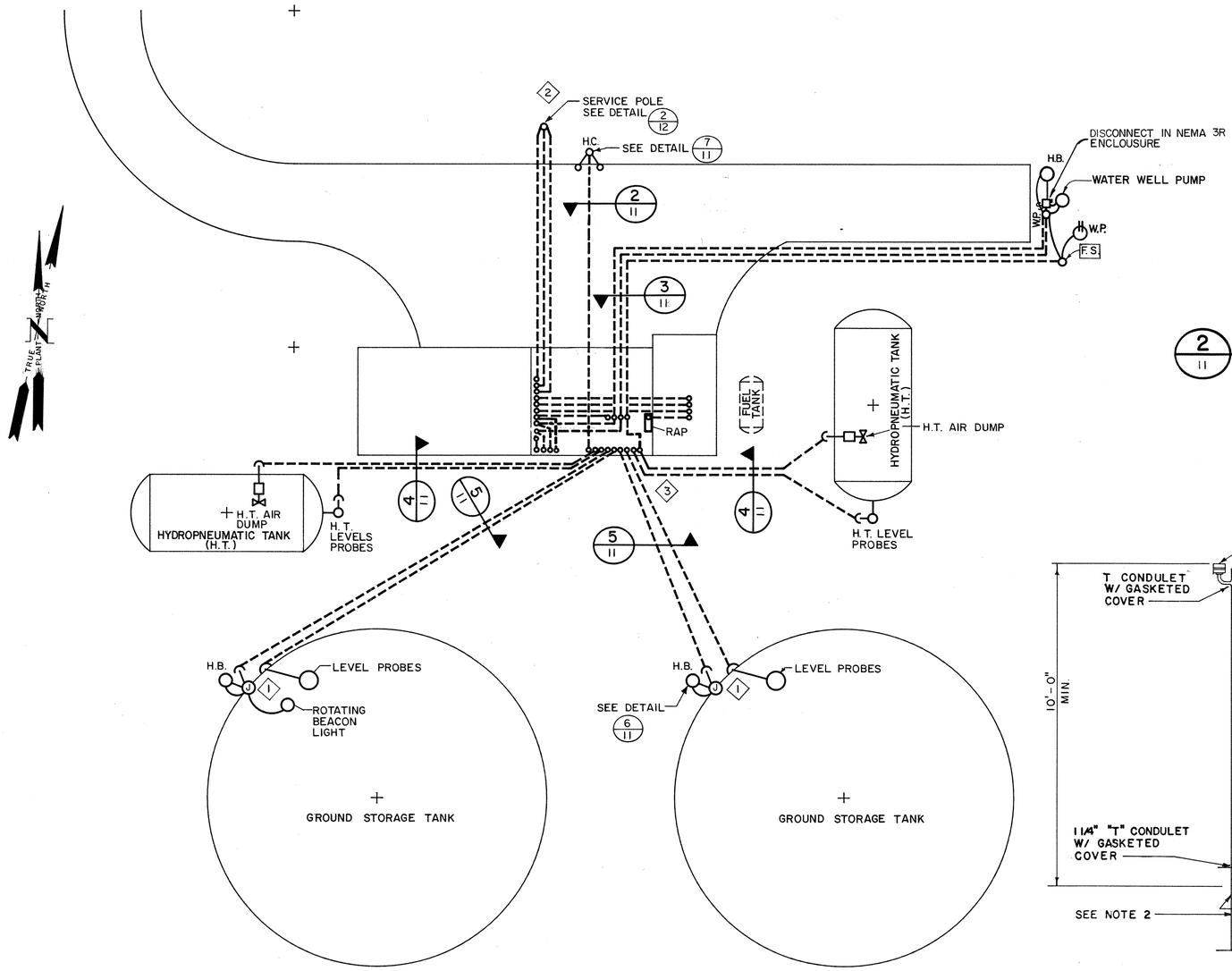

1/11 SITE PLAN
NOT TO SCALE

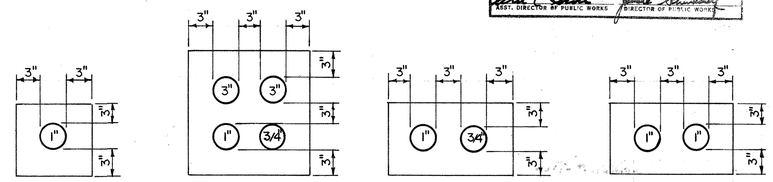

2/11 DETAIL NOT TO SCALE
3/11 DETAIL NOT TO SCALE
4/11 DETAIL NOT TO SCALE
5/11 DETAIL NOT TO SCALE

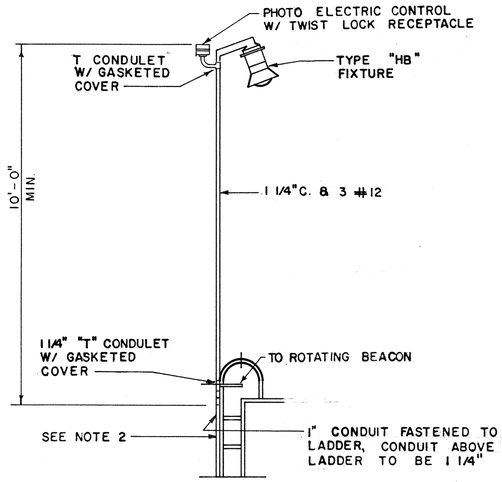

6/11 DETAIL AREA LIGHT
NOT TO SCALE

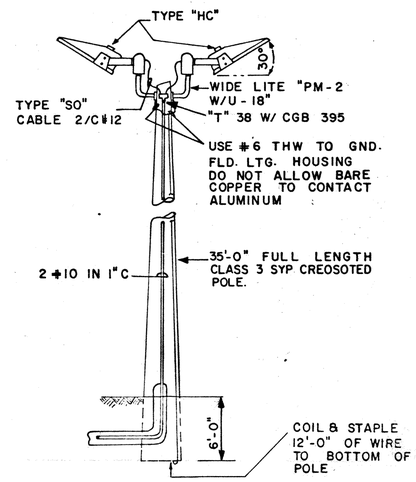

7/11 FLOOD LIGHT DETAIL
NOT TO SCALE

CITY OF HOUSTON
DEPARTMENT OF PUBLIC WORKS
APPROVALS
WATER DESIGN — 6-24-82
WATER QUALITY — 6-24-82
PAVING DEPT. — 7-6-82
SEWER SERVICES
ASSISTANT DIRECTOR WATER DIV. — Water Production
SANITARY SEWERS
CHIEF ENG. - SEWER DIV.
OTHER DEPT'S. — 7-19-82
TRAFFIC & TRANSPORTATION DEPT.
CITY PLANNING DEPT.
ASST. DIRECTOR OF PUBLIC WORKS
DIRECTOR OF PUBLIC WORKS

No.	Date	Revisions	App.

Lockwood, Andrews & Newnam, Inc.
Engineering-Architecture-Planning-Project Management

STATE OF TEXAS — D. L. MEYER — 50603 — REGISTERED PROFESSIONAL ENGINEER

WATER PLANT No. 3

WEST HOUSTON MUNICIPAL UTILITY DISTRICT
WEST OAKS PLAZA, SECTION I
HARRIS COUNTY, TEXAS

ELECTRICAL SITE PLAN AND DETAILS

Scale: NONE Date: JUNE, 1982
Designed by: L. Shaughnessy
Drawn by: Jim G. Gonzalez
Checked by: D. L. Meyer
Approved by:
Project No. 1570-20-001-000

Sheet 11 of 13

W.P. 0238

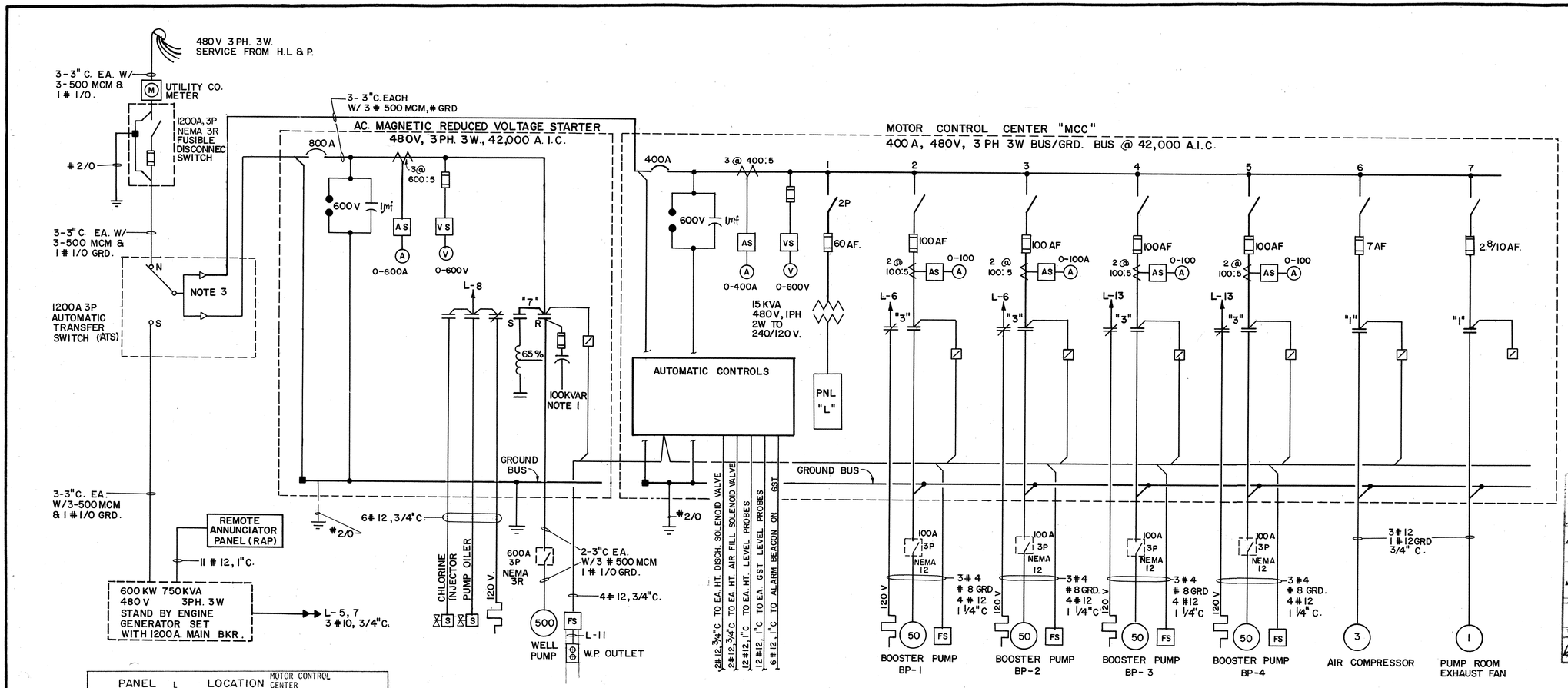

1/12 ONE LINE DIAGRAM

PANEL L	LOCATION MOTOR CONTROL CENTER				
120/240 V 1 PH 3 W					
ALL BREAKERS 20A EXCEPT AS NOTED					
KW	EQUIPMENT	CKT. No.	CKT. No.	EQUIPMENT	KW.
1.1	TIME SW & LIGHTING	1	2	AUTO CONTROLS	.5
SEE NOTE 2 .6	DETECTOR, 1FA, EF - 2	3	4	INSTR. PNL.	.7
2.0	BATTERY CHARGER	5 30	6	BOOSTER P. SPACE HTRS.	1.0
2.0	EMG - GEN HTRS.	7 30	8	CHLORINE INJECTOR	.9
2.2	SPACE HTR.	9	10	AIR DRYER EF-1	.7
		11	* 12	RCPT	1.2
1.0	BOOSTER P. SPACE HTR.	13	14	PUMP HOUSE LIGHTS	.7
	SPACE	15	16	SPACE	
CONNECTED ____ KW			EST. DEMAND ____ KW		

* GROUND FAULT INTERRUPTER

NOTES

1. PROVIDE CAPACITORS WITH KVAR RATINGS AS RECOMMENDED BY THE MOTOR MANUFACTURER TO BRING THE MOTOR OPERATING POWER FACTOR UP TO 90%.
2. PROVIDE HANDLE LOCK ON BREAKER.
3. INSTALL TWO STANDARD LUGS SIDE BY SIDE WITH 4 HOLES EACH.

LIGHTING FIXTURE SCHEDULE

TYPE	MANUFACTURER & CATALOG NO.	DESCRIPTION	MOUNTING	LAMPS	DIFFUSER	REMARKS
FA	Daybrite WR41241 Miller KD-2100-04	Vaportight, Non Metallic Body	Surface	2-F40RS		All plastic and Gasketed
HA	Holophane #419-120 Wall-Tek TW-705-420	Wallpack	Surface	1-LU70		Mount 9'-0" AFF 210V Ballast
HB	GE H5110L5JGG CH VMVSJ100GP/120	Stanchion Mount		1-LU100		120 V Ballast
HC	Holophane #1230-120-R	Floodlight		H.P.S. 1-LU400		Provide Photo 120 V Ballast; control

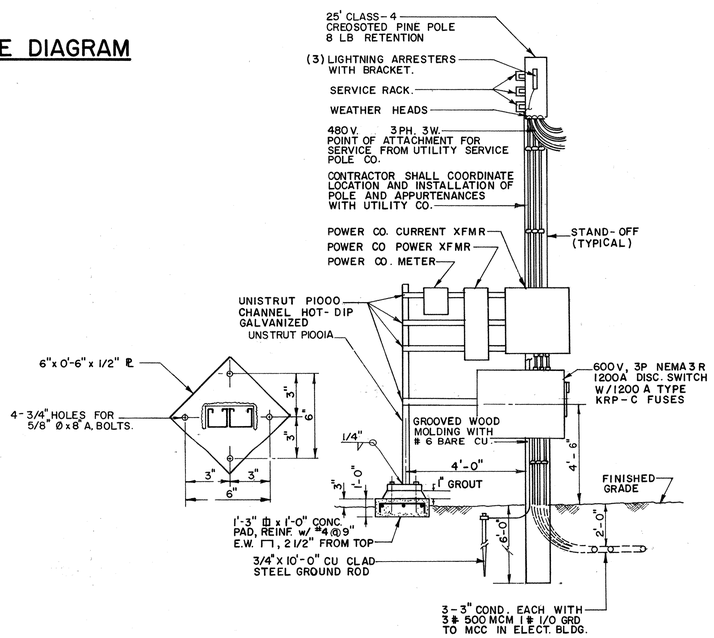

2/12 SERVICE DROP DETAIL
N.T.S.

LEGEND

A	INCANDESCENT - LETTER DENOTES TYPE
HA	HIGH INTENSITY DISCHARGE FIXTURE - LETTER DENOTES TYPE
FA	FLOURESCENT FIXTURE - LETTER DENOTES TYPE
	DUPLEX RECEPTACLE 15A-125V; 2P-3W-G; NEMA 5-15R; 36" AFF.
A	SINGLE RECEPTACLE 30A-250V; 2P-3W-G; NEMA 6-30R, 30" AFF.
S	SINGLE POLE WALL SWITCH
S_M	MANUAL MOTOR STARTER WITH THERMAL ELEMENT
S_P	SWITCH WITH PILOT LIGHT
	BRANCH CIRCUIT OR FEEDER EXPOSED OR CONCEALED IN EITHER CEILING OR WALL
	BRANCH CIRCUIT OR FEEDER IN FLOOR SLAB OR UNDERGROUNG
	SWITCH LEG
L-1,3	HOMERUN TO PANELBOARD - SUBSCRIPT DENOTES PANELBOARD AND CIRCUITS
E	EMPTY CONDUIT
	CAPPED CONDUIT
	CONDUIT WEATHERHEAD
#270 G	BARE STRANDED COPPER GROUND WIRE, SIZE AS INDICATED
OR	3/4" x 10'-0" LONG COPPER CLAD GROUND ROD
OR	NON-FUSIBLE DISCONNECT SWITCH - SIZE AS SHOWN
OR	FUSIBLE DISCONNECT SWITCH - SIZE AS NOTED
OR T	TRANSFORMER - DESCRIPTION AND RATING AS SHOWN
OR	MAGNETIC MOTOR STARTER - SIZE AS NOTED
30KVAR	CAPACITOR - SIZE AS NOTED
3@ 200:5	CURRENT TRANSFORMER - NUMBER AND RATIO AS INDICATED
A	AMMETER - SCALE AS INDICATED
V	VOLTMETER - SCALE AS INDICATED
AS	AMMETER SWITCH - PHASE A, B, C, OFF
VS	VOLTMETER SWITCH - PHASE AB, BC, CA, OFF, AN, BN, CN
	SELECTOR SWITCH - "HAND-OFF-AUTO"
	PILOT LIGHT
M 1/2	SINGLE PHASE MOTOR - HP AS NOTED
M	THREE PHASE MOTOR - HP AS NOTED
120V	MOTOR SPACE HEATER - VOLTAGE AS INDICATED
J	JUNCTION BOX
FS	FLOW SWITCH
S	SOLENOID VALVE
WP	WEATHERPROOF
650V	SURGE ARRESTER - VOLTAGE RATING AS INDICATED

CITY OF HOUSTON
DEPARTMENT OF PUBLIC WORKS
APPROVALS
WATER DESIGN — 6-24-82
WATER QUALITY — 6-24-82
PAYING DEPT. — STORM SEWERS — 7-6-82
ASSISTANT DIRECTOR - WATER DIV. — WATER PRODUCTION
SANITARY SEWERS
CHIEF ENG. - SEWER DIV.
OTHER DEPT'S.
TRAFFIC & TRANSPORTATION DEPT.
CITY PLANNING DEPT. — 7-19-82
ASST. DIRECTOR OF PUBLIC WORKS
DIRECTOR OF PUBLIC WORKS

No.	Date	Revisions	App.

Lockwood, Andrews & Newnam, Inc.
Engineering-Architecture-Planning-Project Management

STATE OF TEXAS D. L. MEYER 60603 REGISTERED PROFESSIONAL ENGINEER

WATER PLANT No. 3

WEST HOUSTON MUNICIPAL UTILITY DISTRICT
WEST OAKS PLAZA, SECTION ONE
HARRIS COUNTY, TEXAS

ONE LINE DIAGRAM AND SCHEDULES

Scale: NONE
Date: JUNE, 1982
Designed by: L. Shoquerlaya
Drawn by: C. Estevez
Checked by: D. L. Meyer
Approved by:
Project No. 1570-20-001-

Sheet 12 of 13

W.P. 0238

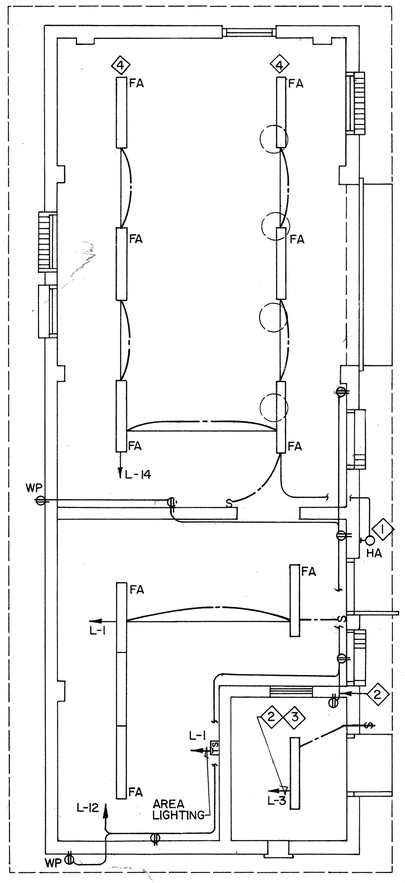

1/13 BLDG LTG & RCPT
NOT TO SCALE

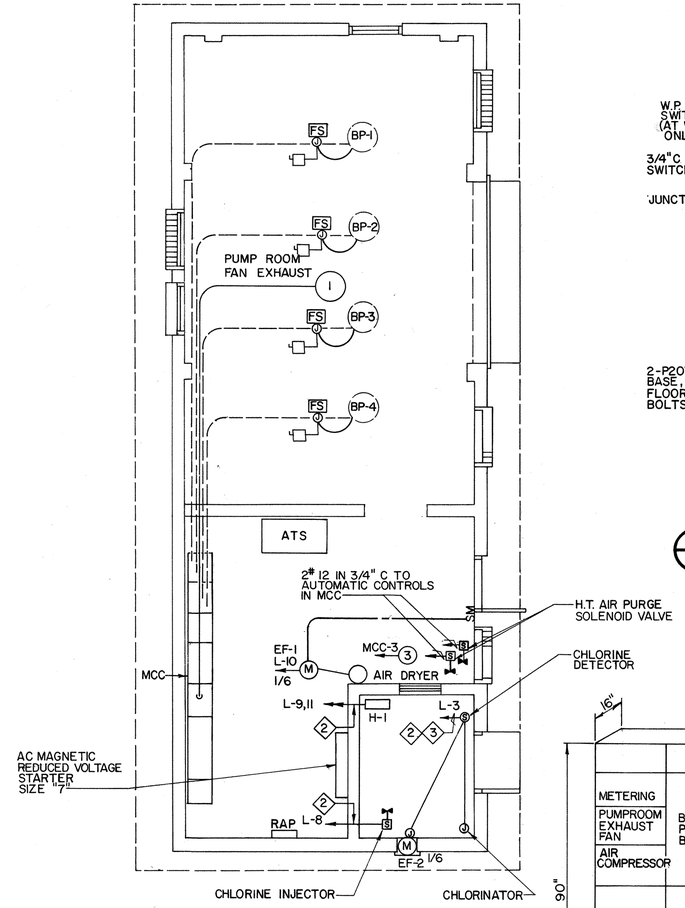

2/13 BLDG POWER
NOT TO SCALE

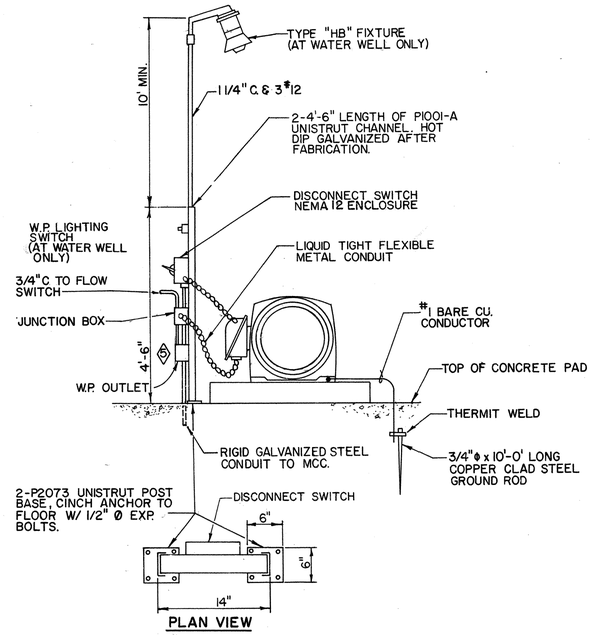

3/13 MOTOR CONNECTION DETAIL
NOT TO SCALE

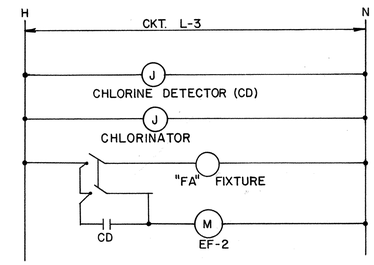

4/13 CIRCUIT L-3 DIAGRAM
NOT TO SCALE

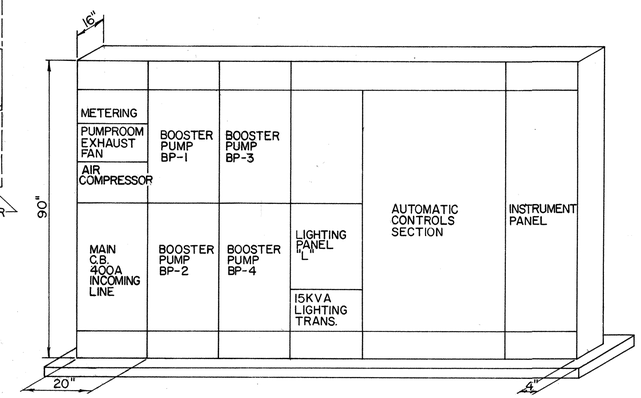

5/13 WATER PLANT #3 ELEV. FOR MCC.
NOT TO SCALE

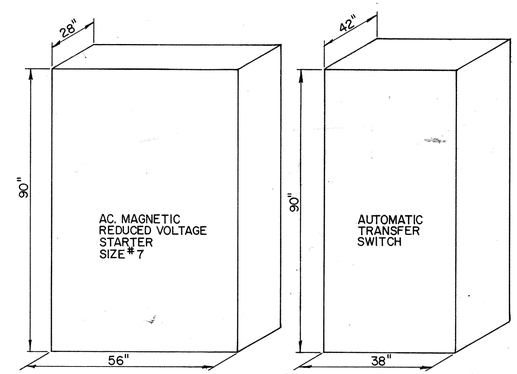

ACMAGNETIC REDUCED VOLTAGE STARTER SIZE "7", CLASS 11606 w/MOLDED CASE C.B. 800A, 3P

ATS. 1200A

6/13 WATER PLANT #3 ELEV. FOR STARTER & ATS.
NOT TO SCALE

NOTES:

1. WALLPACK LIGHT TO BE OPERATED FROM TIME SWITCH.
2. ALL ELECTRICAL CONDUITS ENTERING CHLORINE ROOM SHALL BE SEALED TO PREVENT GAS LEAKAGE THRU CONDUIT SYSTEM TO OTHER AREAS.
3. SEE DETAIL 4/14 FOR WIRING DIAGRAM OF CIRCUIT L-3.
4. COORDINATE LIGHT FIXTURE LOCATION WITH CRANE CONTRACTOR.
5. PROVIDE 120V W.P. OUTLET FOR WELL PUMP ONLY.

CITY OF HOUSTON
DEPARTMENT OF PUBLIC WORKS
APPROVALS
WATER DESIGN — Brandoggin 6-24-82
PAVING DEPT. — R. Hebert 7-6-82
WATER QUALITY — W.M. Williams 6-24-82
STORM SEWERS
ASSISTANT DIRECTOR - WATER DIV.
SANITARY SEWERS
CHIEF ENG. - SEWER DIV.
OTHER DEPT'S.
TRAFFIC & TRANSPORTATION DEPT. — Randall Riley 2-19-82
CITY PLANNING COMMISSION
ASST. DIRECTOR - DEPUTY DIR. WORKS
DIRECTOR OF PUBLIC WORKS

No.	Date	Revisions	App.

Lockwood, Andrews & Newnam, Inc.
Engineering-Architecture-Planning-Project Management

D. L. MEYER 60603 REGISTERED PROFESSIONAL ENGINEER TEXAS

WATER PLANT No. 3

WEST HOUSTON MUNICIPAL UTILITY DISTRICT
WEST OAKS PLAZA, SECTION ONE
HARRIS COUNTY, TEXAS

BUILDING, POWER AND LIGHTING LAYOUTS AND DETAILS

Scale: NONE
Date: JUNE, 1982
Designed by: L. Sharpe's Group
Drawn by: Freddie C. Fogle
Checked by: D. L. Meyer
Approved by: D. L. Meyer
Project No. 1570-20-001-

Sheet 13 of 13

W.P. 0238

TELEDYNE POST N16305

CITY OF HOUSTON

DEPARTMENT OF PUBLIC WORKS AND ENGINEERING
ENGINEERING, CONSTRUCTION AND REAL ESTATE GROUP

PROPOSED CONSTRUCTION OF ONE AND REHABILITATION OF SEVEN GROUND STORAGE TANKS AT EIGHT PUMPING STATIONS

PROJECT NO. S-0600-11-3 FILE NO. 10170-11

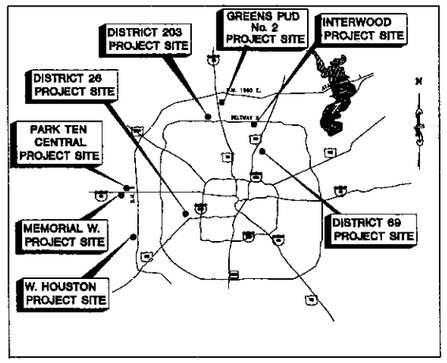

LOCATION MAP

N.T.S.

WATER PLANT	ADDRESS	KEY MAP NO.
INTERWOOD	4631 ALDINE BENDER	374 Y
DISTRICT 26	6830 FAIRDALE	491 W
PARK TEN CENTRAL	1300 LANGHAM CREEK	447 Y
MEMORIAL WEST No. 2	19005 KATY FREEWAY	487 C
GREENS PUD No. 2	17802 IMPERIAL VALLEY	372 H
W. HOUSTON No. 3	14425 S. RICHMOND	487 Z
DISTRICT 69 No. 1	6331 MCCOLLUM	416 N
DISTRICT 203	1255 GEARS ROAD	372 N

MAYOR
BOB LANIER

CONTROLLER
LLOYD KELLEY

NOVEMBER, 1996

DRAWING INDEX

DESCRIPTION	SHEET NO.
COVER SHEET	1
INTERWOOD PROPOSED SITE PLAN	2
INTERWOOD TANK LAYOUT AND DETAILS	3
DISTRICT 26 PROPOSED SITE PLAN	4
DISTRICT 26 TANK LAYOUT AND DETAILS	5
PARK TEN CENTRAL PROPOSED SITE PLAN	6
PARK TEN CENTRAL TANK LAYOUT AND DETAILS	7
MEMORIAL WEST MUD No. 2 PROPOSED SITE PLAN	8
MEMORIAL WEST MUD No. 2 TANK LAYOUT AND DETAILS	9
GREENS PUD No. 2 PROPOSED SITE PLAN	10
GREENS PUD No. 2 TANK LAYOUT AND DETAILS	11
WEST HOUSTON No. 3 PROPOSED SITE PLAN	12
WEST HOUSTON No. 3 TANK LAYOUT AND DETAILS	13
DISTRICT 69 No. 1 PROPOSED SITE PLAN	14
DISTRICT 69 No. 1 TANK LAYOUT AND DETAILS	15
DISTRICT 203 PROPOSED SITE PLAN	16
DISTRICT 203 TANK LAYOUT AND DETAILS	17
GROUND STORAGE TANK STANDARD DETAILS	18
GROUND STORAGE TANK STANDARD DETAILS	19
GROUND STORAGE TANK STANDARD DETAILS	20
GROUND STORAGE TANK STANDARD DETAILS	21
CATHODIC PROTECTION SYSTEM DETAILS	22

AS-BUILTS
AS-BUILT INFORMATION TAKEN FROM RED-LINED DRAWINGS FURNISHED BY
PELTIER BROTHERS CONSTRUCTION, INC. 5/5/99
CONTRACTOR DATE
PATE ENGINEERS, INC.

DEBRA L. ANGLIN 59924 REGISTERED PROFESSIONAL ENGINEER

PATE ENGINEERS
13400 N.W. Freeway, Suite 300 Houston, Tx. Phone:713-462-3178
PEI JOB NO.: 057-030-10

ISSUED FOR CONSTRUCTION
June 2, 1997

APPROVED
CITY OF HOUSTON

CITY ENGINEER — DATE
RICHARD C. SCOTT, P.E.

DIRECTOR OF PUBLIC WORKS AND ENGINEERING — DATE
JIMMIE SCHINDEWOLF, P.E.

DISTRICT COUNCIL MEMBERS

HELEN HUEY DISTRICT A	MICHAEL J. YARBROUGH DISTRICT B	MARTHA J. WONG DISTRICT C
JEW DON BONEY, JR. DISTRICT D	ROB TODD DISTRICT E	RAY F. DRISCOLL DISTRICT F
JOHN KELLEY DISTRICT G	FELIX FRAGA DISTRICT H	JOHN E. CASTILLO DISTRICT I

COUNCIL MEMBERS AT-LARGE

GRACIE GUZMAN SAENZ POSITION 1	JOE ROACH POSITION 2
ORLANDO SANCHEZ POSITION 3	VACANT POSITION 4

JUDSON W. ROBINSON III
POSITION 5

CITY DWG. NO: 32961
SHEET NO 1 OF 22 SHEETS

10170-11

PATE ENGINEERS
C:\PROJECTS\PI-CONTRACT\ 12/11/96 13:39

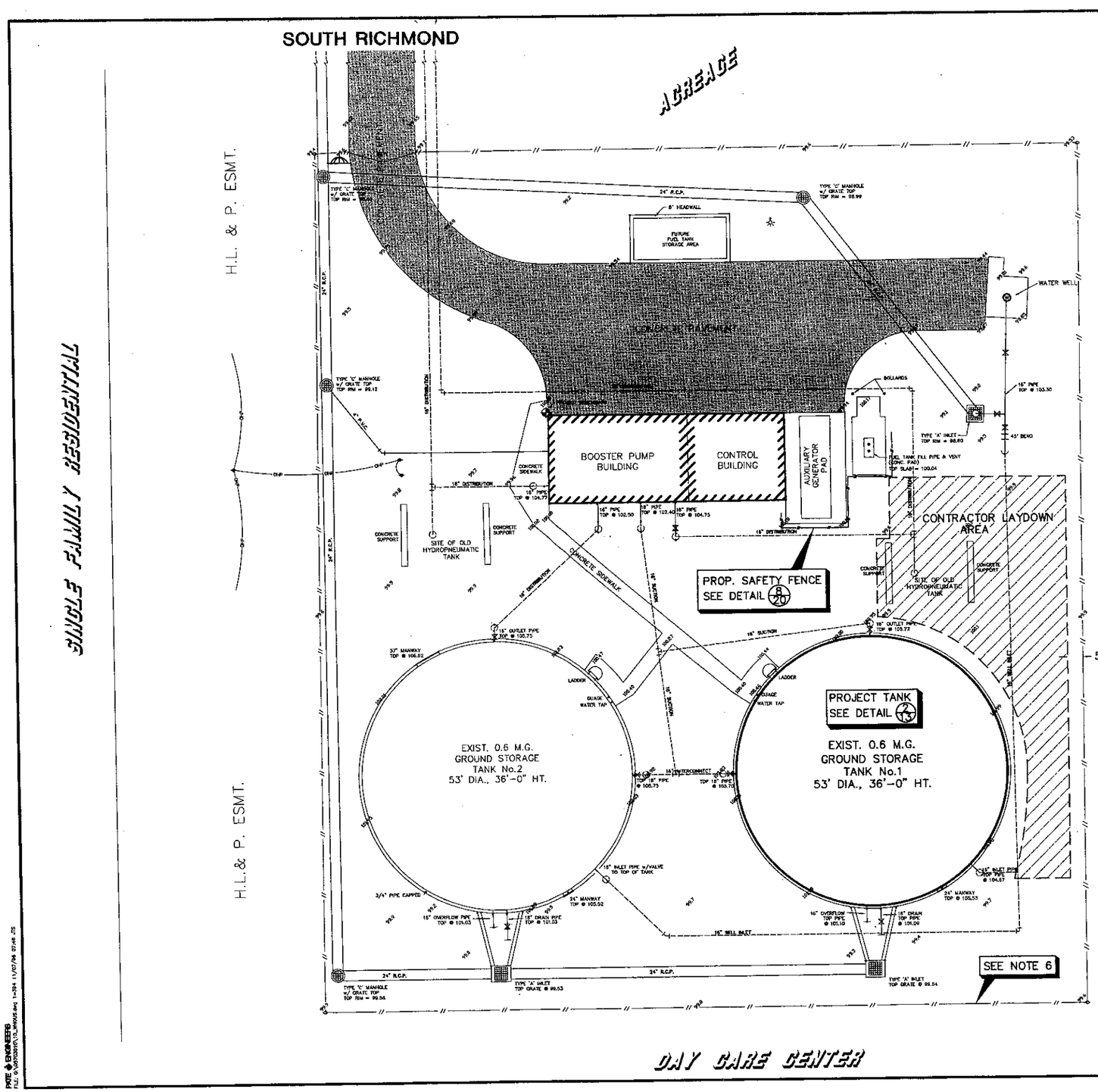

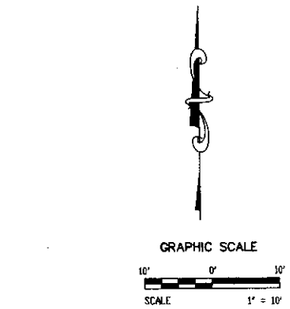

LEGEND

- OHP — OVERHEAD POWER
- WOOD FENCE
- EXPOSED HORIZONTAL PIPING w/SIZE
- BURIED HORIZONTAL PIPING w/SIZE
- CHAIN LINK FENCE
- VERTICAL PIPE
- POWER POLE w/DOWN GUY
- LIGHT STANDARD
- GATE VALVE (BELOW GRADE)
- GATE VALVE (EXPOSED PIPING)
- LADDER
- ELECTRIC PUMP
- CONCRETE/ASPHALT ELEVATION
- NATURAL GROUND ELEVATION
- (NFV) NOT FIELD VERIFIED
- "HARD HAT AREA" SIGN SEE DETAIL 18/20

DATE	APP'D	DESCRIPTION	REVISION

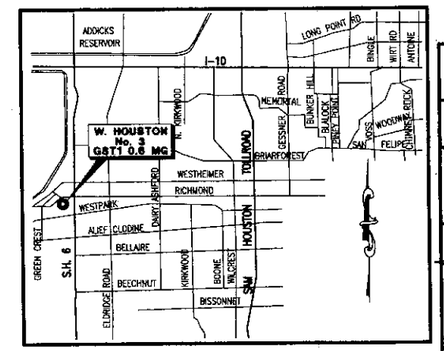

PROJECT SITE LOCATION
N.T.S.

ACREAGE

TANK SHELL DATA		
RING	HEIGHT	AVG. THICKNESS
1 (BTM)	8'	0.334"
2	8'	0.250"
3	8'	0.249"
4	8'	0.246"
5 (TOP)	8'	0.246"

—WARNING—

OVERHEAD LINES MAY EXIST ON THE PROPERTY. CONTRACTOR SHOULD LOCATE THEM PRIOR TO BEGINNING ANY CONSTRUCTION. TEXAS LAW, SECTION 752, HEALTH & SAFETY CODE, FORBIDS ALL ACTIVITIES IN WHICH PERSONS OR THINGS MAY COME WITHIN SIX (6) FEET OF LIVE OVERHEAD HIGH VOLTAGE LINES. CONTRACTORS AND OWNERS ARE LEGALLY RESPONSIBLE FOR SAFETY OF CONSTRUCTION WORKERS UNDER THIS LAW. THIS LAW CARRIES BOTH CRIMINAL AND CIVIL LIABILITY. TO ARRANGE FOR LINES TO BE TURNED OFF OR MOVED CALL HL&P AT 228-7400.
NO SEPARATE PAY.

NOTES:

1. ALL DEBRIS GENERATED FROM WORK ON THIS PROJECT, INCLUDING SLUDGE FROM INITIAL TANK CLEANOUT AND BLAST DEBRIS FROM COATING REMOVAL SHALL BE DISPOSED OF AT AN APPROVED LANDFILL.
2. CONTRACTOR IS RESPONSIBLE FOR OBTAINING ALL TESTS, PERMITS AND MANIFESTS NECESSARY TO DISPOSE OF DEBRIS.
3. CONTRACTOR SHALL RESTORE SITE TO EQUAL OR BETTER CONDITION UPON COMPLETION OF WORK.
4. CONTRACTOR POST SIGN – "HARD HAT AREAS" 18/20
5. CONTRACTOR MUST KEEP VEHICLES AND EQUIPMENT IN DESIGNATED AREAS.
6. CONTRACTOR TO CONSTRUCT AND MAINTAIN AN IMPERVIOUS BARRIER ALONG FENCELINE DURING ABRASIVE BLAST OPERATIONS. NO EXTRA PAY.

PROJECT BENCHMARK

FOUND SQUARE CHISELED ON TOP OF THE SIDEWALK AT THE NORTHWEST CORNER OF THE BOOSTER PUMP BUILDING.
ASSUMED ELEVATION = 100.00

NOTE: REFERENCE IS HEREBY MADE TO CONSTRUCTION PLANS USED FOR REFERENCE PREPARED BY: LOCKWOOD, ANDREWS & NEWNAM, INC., JOB No. 1570-20-001-000, W.P. 0238, DATED JUNE 1982.

NOTE: ALL UNDERGROUND INFORMATION SHOWN HEREON IS TAKEN FROM EXISTING SURFACE FEATURES AND / OR DRAWINGS BY LOCKWOOD, ANDREWS & NEWNAM, INC., JOB No. 1570-20-001-000, W.P. 0238, DATED JUNE 1982. PIPE DELINEATION IS BASE ON THE SURVEYORS BEST INTERPRETATION OF THIS DATA.

STATE OF TEXAS — DEBRA L. ANGLIN — No. 59924 — REGISTERED PROFESSIONAL ENGINEER

PATE ENGINEERS
13405 N.W. Freeway, Suite 300 Houston, Tx. Phone:713-492-3178

APPROVED	J.E.P.	DATE:	AUGUST, 1996
DR.	M.D.K.	JOB NO.	057-030-10

CITY OF HOUSTON WATER STORAGE TANK REHABILITATION AND REPLACEMENT PROGRAM

FILE NO. 10170 - 11

WEST HOUSTON No. 3 PROPOSED SITE PLAN

CITY OF HOUSTON
DEPARTMENT OF PUBLIC WORKS AND ENGINEERING
ENGINEERING, CONSTRUCTION AND REAL ESTATE GROUP

SECTION APPROVALS

WATER ENGINEERING 12/4/96	TRAFFIC AND SIGNAL ENGINEERING
WASTEWATER ENGINEERING	STREET & BRIDGE ENGINEERING
STORM SEWER ENGINEERING 12-11-96	CONSTRUCTION 11/5/96
MANAGER, WATER ENGINEERING	WATER PRODUCTION 11/6/96

OTHER DEPARTMENTS

PLANNING AND DEVELOPMENT	SPONSOR DEPARTMENT
CITY ENGINEER	DATE: 12.6.96
DIRECTOR OF PUBLIC WORKS & ENGINEERING	DATE: 12/17/96

SUBMITTED:		DESIGNED BY:	L.C.L.
SCALE:	1"=10'	DRAWN BY:	M.B.C.
DATE:		SHEET NO.	12 OF 22 SHEETS
SURVEY BY:	G.P.S.		
FILE NO.:		DWG. NO.	PW 32961

10170-11

PATE ENGINEERS
FILE: G:\10170\10170_WH03.dwg 1=39.1 11/07/96 07:46 JS

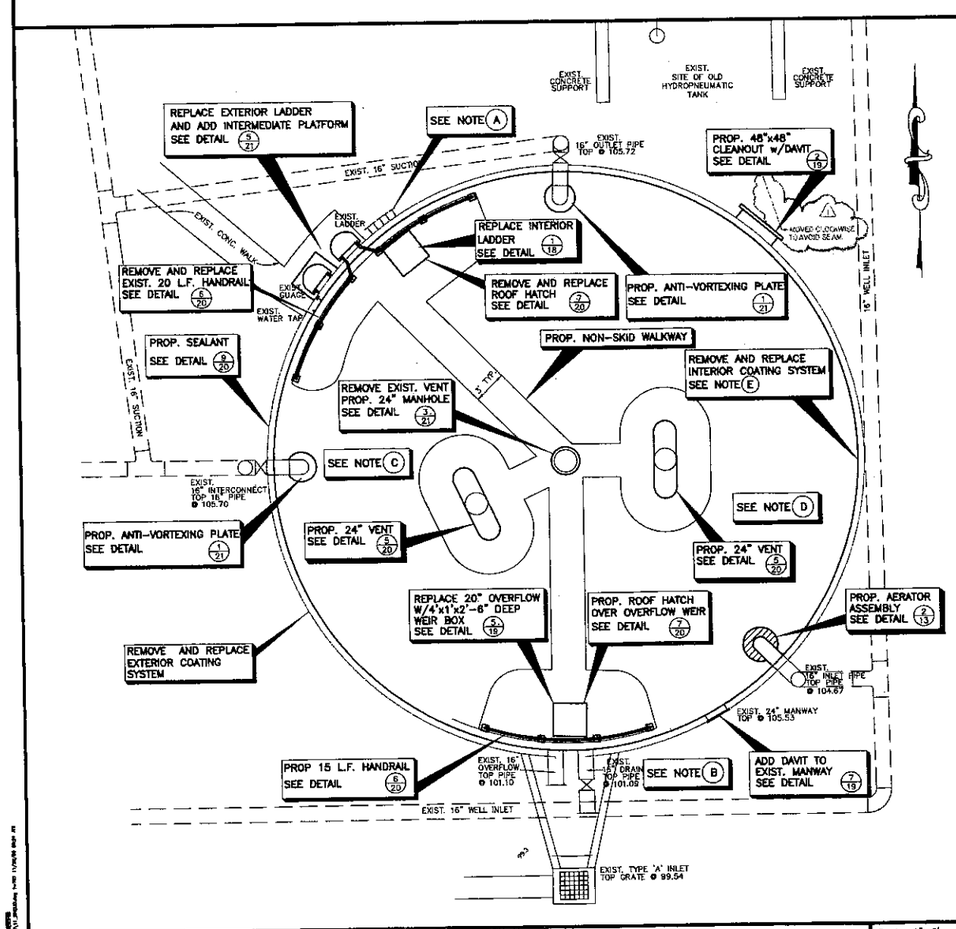

1 PROPOSED TANK LAYOUT

Scale: 1"=6'
File:

NOTES:

NOTE A

1. REPLACE SAMPLE TAP 1/20
2. PROP. LEVEL GAUGE 2/20
   PLUG EXIST. COUPLING 3/20
3. PROP. LEVEL TRANSMITTER
4. PROP. TWO 3/4" COUPLINGS W/ PLUGS 1/20

NOTE B

1. PROP. 1-1/4" COUPLING ON OVERFLOW DOWNSPOUT
   SEE DETAIL 2/21

NOTE C

SEAL WELD 3'x3'x1" CENTER COLUMN BASE PLATE TO FLOOR

NOTE D

PROVIDE INTERNAL GALVANIC CATHODIC PROTECTION SYSTEM SEE DETAIL 3/22

NOTE E

EXIST. INTERNAL COATING SYSTEM IS "COAL TAR" EPOXY.

NOTE F

SEAL WELD APPROX. 60 6" DIA.x1/4" STL. PLATES OVER DEEP PITS ON FLOOR.

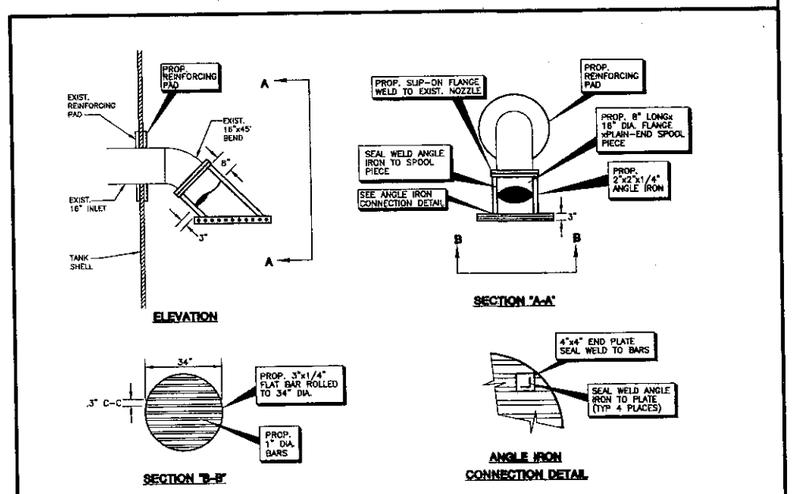

NOTES:

1. HOT DIP GALVANIZE AERATOR ASSEMBLY AFTER FABRICATION.
2. PROVIDE ISOLATION GASKET AT SLIP-ON FLANGE ON 45° BEND.
3. PROVIDE TYPE 304 SS BOLTS FOR CONNECTION.

2 AERATOR ASSEMBLY

Scale: 1"=6'
File:

REVISION	DESCRIPTION	APP'D	DATE
1	CONSTRUCTION		7/1/97

STATE OF TEXAS
DEBRA L. ANGLIN
59624
REGISTERED PROFESSIONAL ENGINEER
12/9/96

PATE ENGINEERS
13405 N.W. Freeway, Suite 300 Houston, Tx. Phone:713-462-3178

APPROVED	J.E.P.	DATE	AUGUST, 1996
DC	M.D.K.	JOB NO.	057-030-10

CITY OF HOUSTON
WATER STORAGE TANK
REHABILITATION AND
REPLACEMENT PROGRAM
FILE NO. 10170 - 11

WEST HOUSTON No. 3
TANK
LAYOUT & DETAILS

CITY OF HOUSTON
DEPARTMENT OF PUBLIC WORKS AND ENGINEERING
ENGINEERING, CONSTRUCTION AND REAL ESTATE GROUP

SECTION APPROVALS

WATER ENGINEERING	TRAFFIC AND SIGNAL ENGINEERING
WASTEWATER ENGINEERING	STREET & BRIDGE ENGINEERING
STORM SEWER ENGINEERING	CONSTRUCTION 12/5/96
MANAGER, WATER ENGINEERING 12-11-96	WATER PRODUCTION

OTHER DEPARTMENTS

PLANNING AND DEVELOPMENT	SPONSOR DEPARTMENT
CITY ENGINEER	DATE: 12-16-96
DIRECTOR OF PUBLIC WORKS & ENGINEERING	DATE: 12/17/96

SUBMITTED:	DESIGNED BY: L.C.L.
SCALE: AS NOTED	DRAWN BY: M.B.C.
DATE:	SHEET NO. 13 OF 22 SHEETS
SURVEY BY:	
FILE NO.:	DWG. NO. PW 32961

10170-11

HARRIS COUNTY WATER CONTROL AND IMPROVEMENT DISTRICT NO. III

HARRIS COUNTY, TEXAS

PROPOSED
WATER TREATMENT PLANT
No. 1

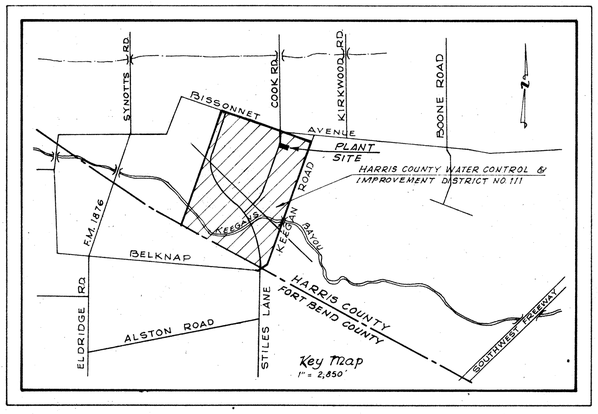

APPROVED

President

Secretary

SHANER, HICKS & CHERRY
Consulting Engineers
HOUSTON, TEXAS

~~W.D. 5114~~ | W.P.D. 148 ~~19677~~ | SHEET 1 of 5 SHEETS

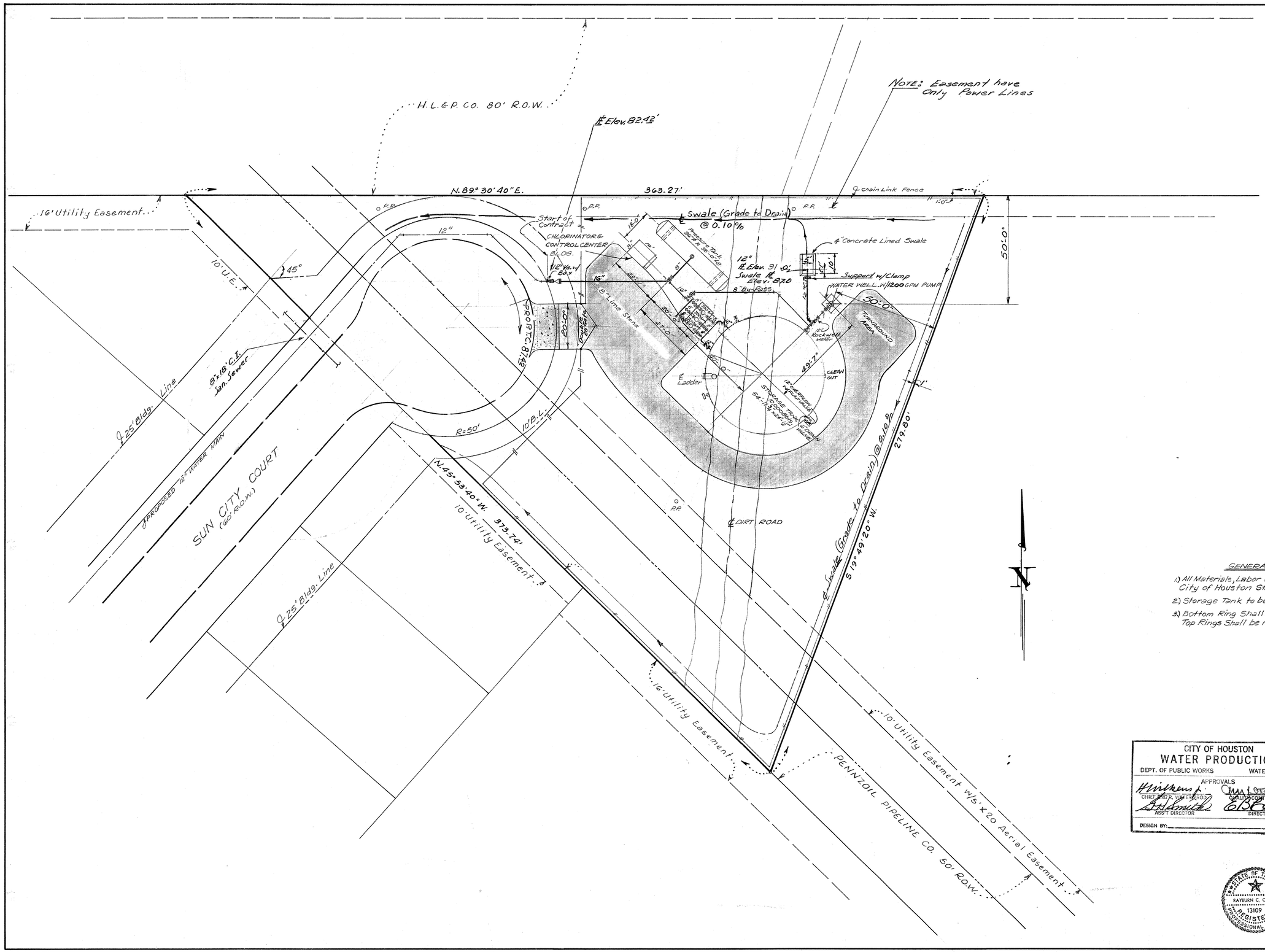

GENERAL NOTES

1.) All Materials, Labor and Equipment to Conform to City of Houston Standards & Specifications.

2.) Storage Tank to be Designed for 10,000 Bbls. Capacity.

3.) Bottom Ring Shall be min. 3/8" Triple Punched - 2 Top Rings Shall be min. No. 10 Gauge Double Punched.

As Built Drawing. March, 1975

CITY OF HOUSTON
WATER PRODUCTION
DEPT. OF PUBLIC WORKS — WATER DIVISION

APPROVALS

CHIEF ENG. & WATER PROD. — QUALITY CONTROL ENG'R.

ASS'T DIRECTOR — DIRECTOR

DESIGN BY:

SHANER, HICKS & CHERRY
Consulting Engineers
HOUSTON, TEXAS

HARRIS COUNTY WATER CONTROL & IMPROVEMENT DISTRICT No. 111

HUNTINGTON VILLAGE

WATER TREATMENT PLANT No. 2

LOCATION PLAN

Scale: 1" = 20' Date: FEB. '73

By: Rayburn C. Cherry
ENGINEER

STATE OF TEXAS
RAYBURN C. CHERRY
13109
REGISTERED PROFESSIONAL ENGINEER

APPROVALS

BK. No. WP.0148 SHEET 2 of 5 SHEETS

Public Works

FILE NO. 19634

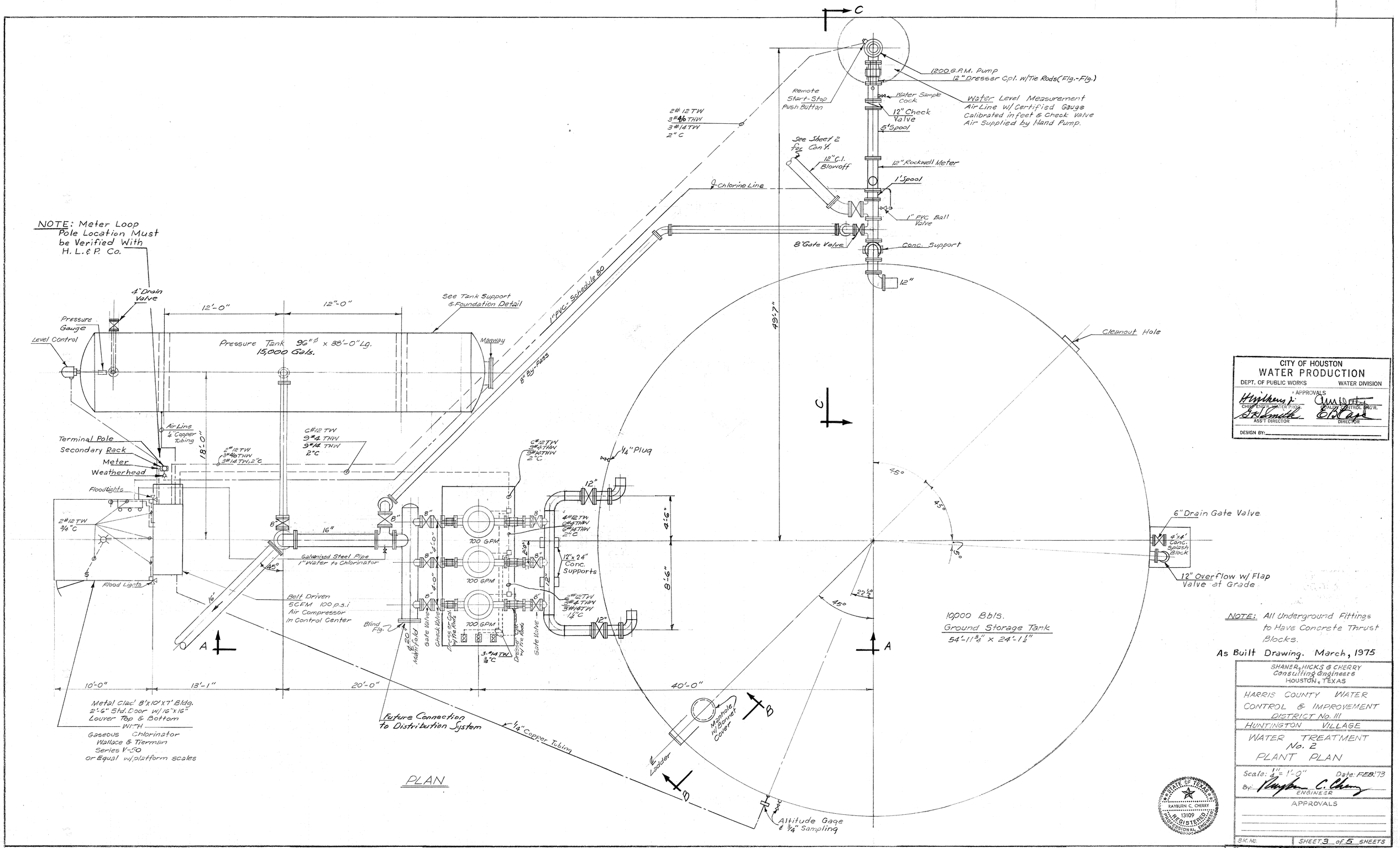
NOTE: Meter Loop Pole Location Must be Verified With H. L. & P. Co.
4" Drain Valve
Pressure Gauge
Level Control
12'-0"
12'-0"
See Tank Support & Foundation Detail
Pressure Tank 96"ø x 38'-0" Lg.
15,000 Gals.
Manway
1" PVC - Schedule 80
8" By-Pass
Air Line 1/4" Copper Tubing
Terminal Pole
Secondary Rack
Meter
Weatherhead
Floodlights
18'-0"
2#12 TW
3/4" C
Flood Lights
2#12 TW
3#4/0 THW
3#14 TW, 2" C
C#12 TW
3#4 THW
3#14 THW
2" C
16"
8"
Galvanized Steel Pipe 1" Water to Chlorinator
45°
16"
Belt Driven 5CFM 100 p.s.i. Air Compressor In Control Center
Blind Flg.
8" 20 Manhole
Gate Valve
Check Valve
Dresser Cpl. w/Tie Rods
3-#14 TW
3/4" C
700 GPM
700 GPM
700 GPM
C#12 TW
3#4 THW
3#4 THW
2" C
1/4" Plug
12"
4#12 TW
3#4 THW
3#4 THW
2" C
12" x 24" Conc. Supports
2#12 TW
3#4 THW
3#14 TW
1/4" C
4'-6"
8'-6"
A
A
10'-0"
13'-1"
20'-0"
40'-0"
Metal Clad 8'x10'x7' Bldg. 2'-6" Std. Door w/16"x16" Louver Top & Bottom
WITH
Gaseous Chlorinator Wallace & Tierman Series V-50 or Equal w/platform scales
Future Connection to Distribution System
1/4" Copper Tubing
Ladder
Manhole w/Bonnet Cover
B
B
Altitude Gage & 3/4" Sampling
PLAN
C
C
49'-7"
Remote Start-Stop Push Button
2#12 TW
3#4/0 THW
3#14 TW
2" C
1200 G.P.M. Pump
12" Dresser Cpl. w/Tie Rods (Flg.-Flg.)
Water Sample Cock
Water Level Measurement Air Line w/ Certified Gauge Calibrated in feet & Check Valve Air Supplied by Hand Pump.
12" Check Valve
5' Spool
See Sheet 2 for Con't.
12" C.I. Blowoff
12" Rockwell Meter
1' Spool
Chlorine Line
1" PVC Ball Valve
8" Gate Valve
Conc. Support
12"
Cleanout Hole
45°
45°
45°
22 1/2°
6" Drain Gate Valve
4'x4' Conc. Splash Block
12" Overflow w/ Flap Valve at Grade
10,000 Bbls.
Ground Storage Tank
54'-11 3/4" x 24'-1 1/2"
NOTE: All Underground Fittings to Have Concrete Thrust Blocks.
As Built Drawing. March, 1975
CITY OF HOUSTON
WATER PRODUCTION
DEPT. OF PUBLIC WORKS
WATER DIVISION
APPROVALS
CHIEF ENG'R. WATER PROD.
QUALITY CONTROL ENG'R.
ASS'T DIRECTOR
DIRECTOR
DESIGN BY:
SHANER, HICKS & CHERRY
Consulting Engineers
HOUSTON, TEXAS
HARRIS COUNTY WATER CONTROL & IMPROVEMENT DISTRICT No. 111
HUNTINGTON VILLAGE
WATER TREATMENT No. 2
PLANT PLAN
Scale: 1/4" = 1'-0"
Date: FEB. '73
By:
ENGINEER
APPROVALS
STATE OF TEXAS
RAYBURN C. CHERRY
No. 13109
REGISTERED PROFESSIONAL ENGINEER
B.K. No.
SHEET 3 of 5 SHEETS
City of Houston
Public Works
FILE NO. 19634
W.P.-0148
W.D. 5774

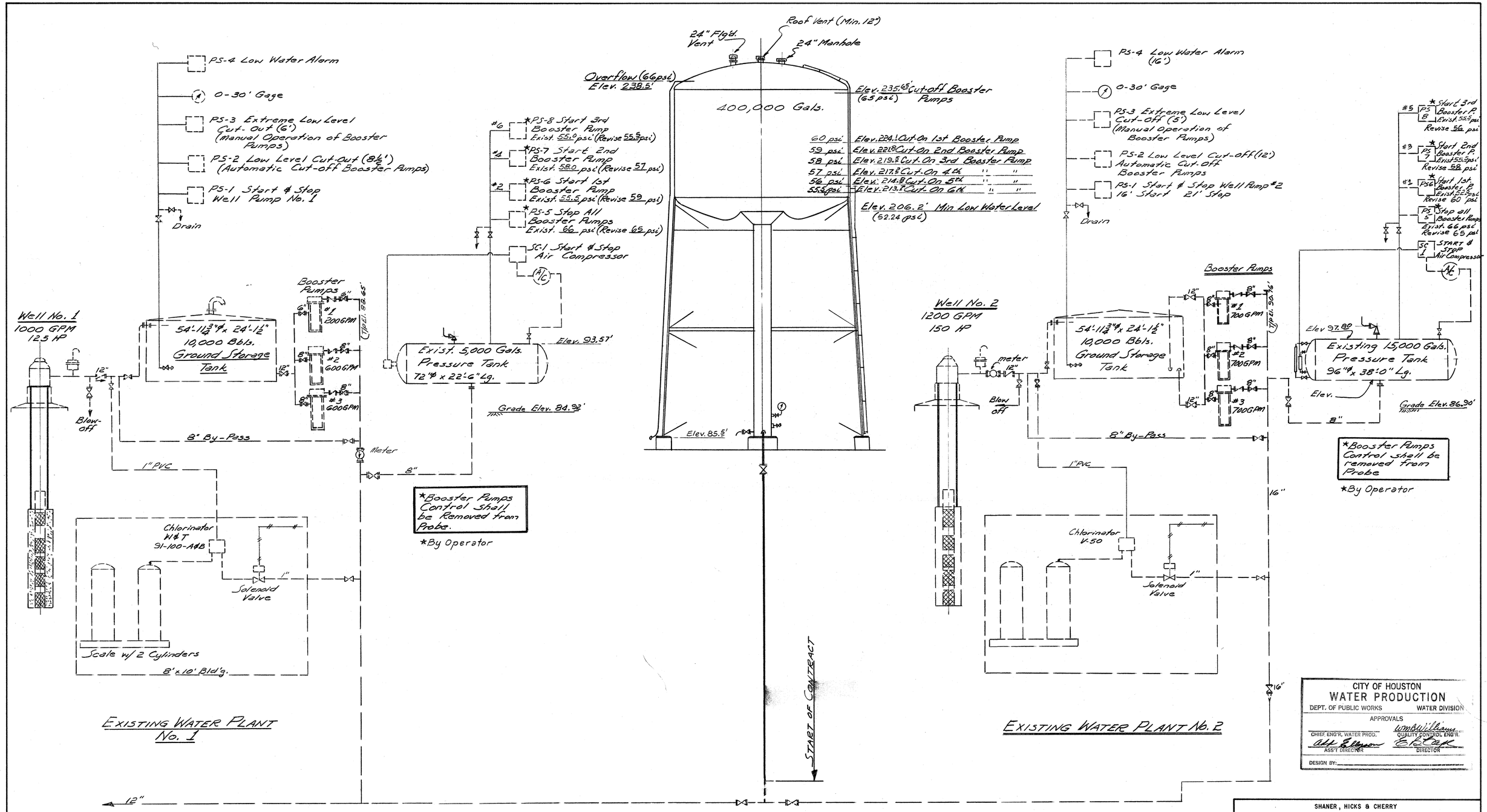

WP-0148 City of Houston FILE NO. 19632

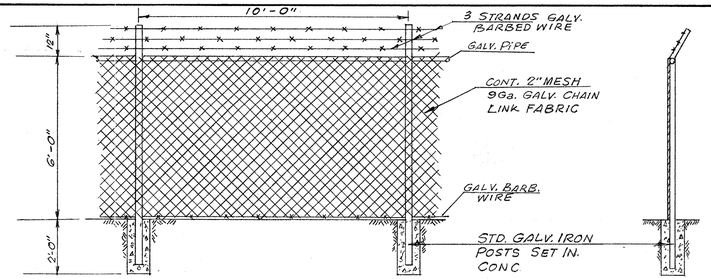

FENCE DETAIL

NOTE:
Corner Posts & Gate Posts To Be 3" O.D. Std Pipe

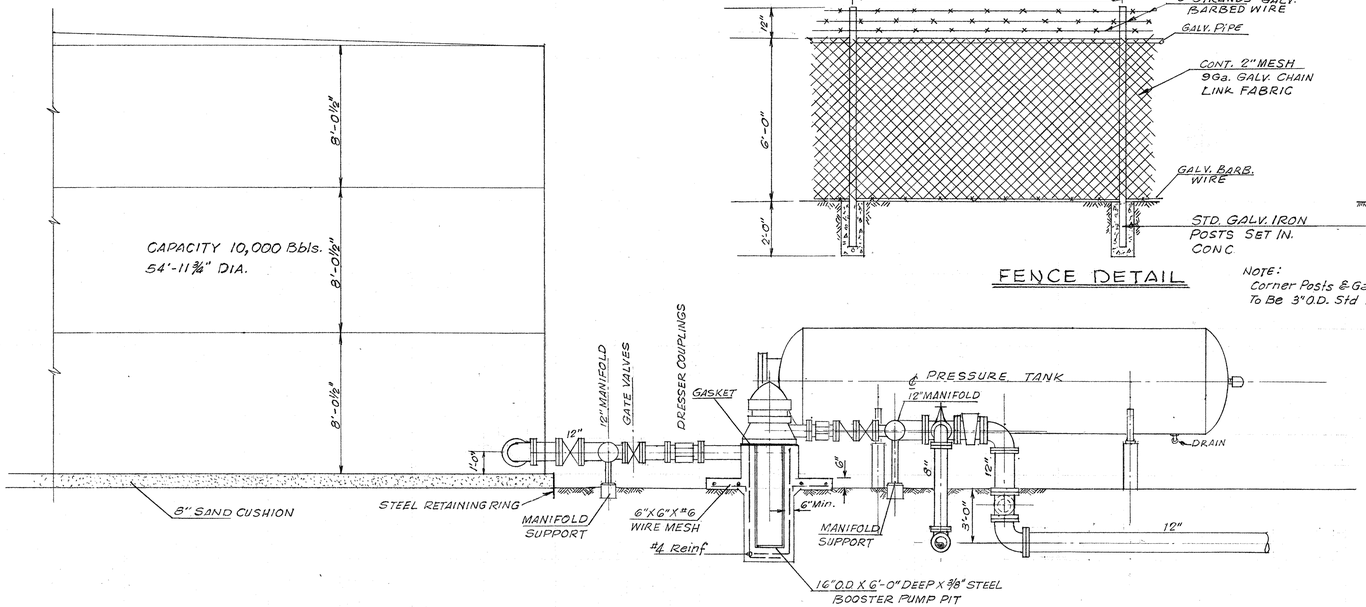

SECTION A-A
Scale: 1/4" = 1'-0"

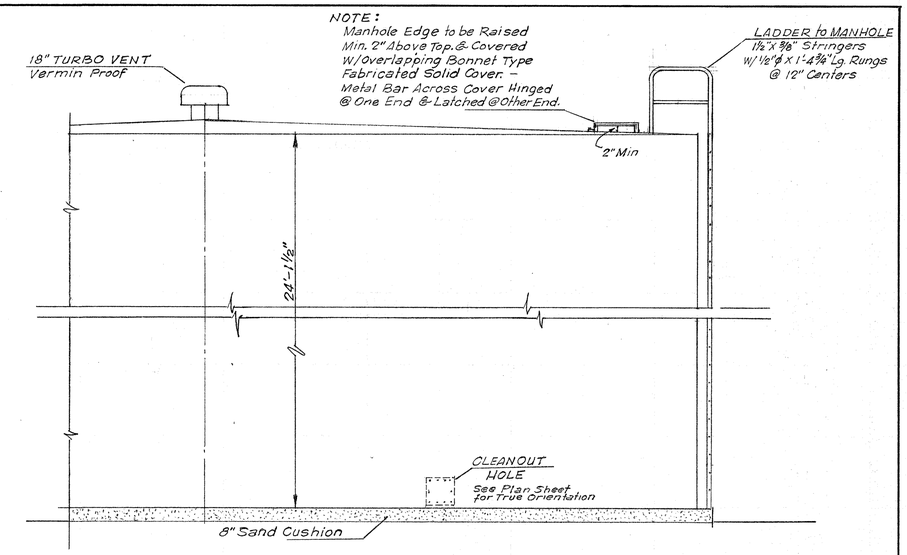

SECTION B-B
Scale: 1/4" = 1'-0"

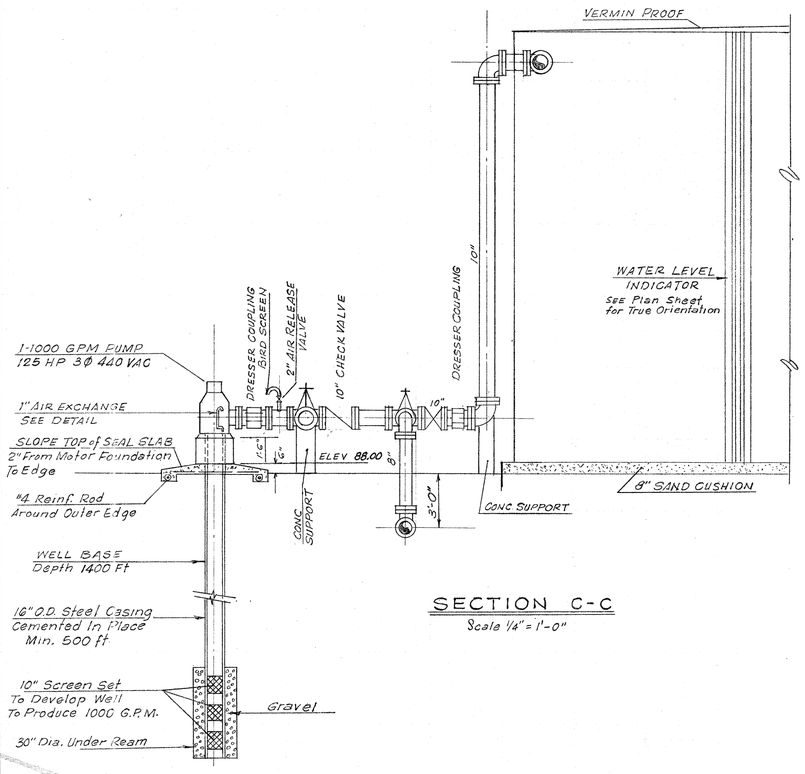

SECTION C-C
Scale 1/4" = 1'-0"

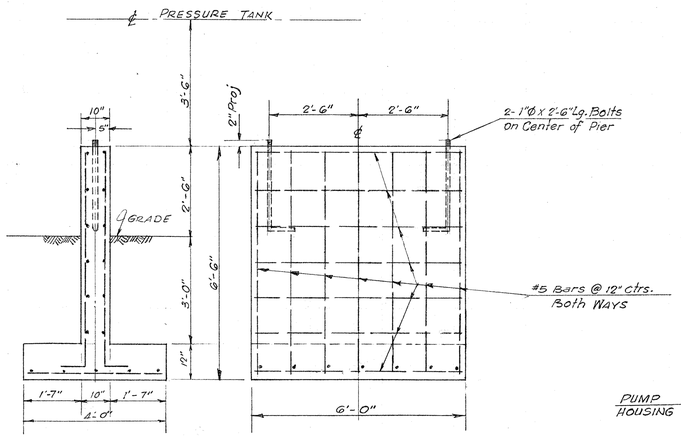

TANK FOUNDATION
Scale: 1/2" = 1'-0"

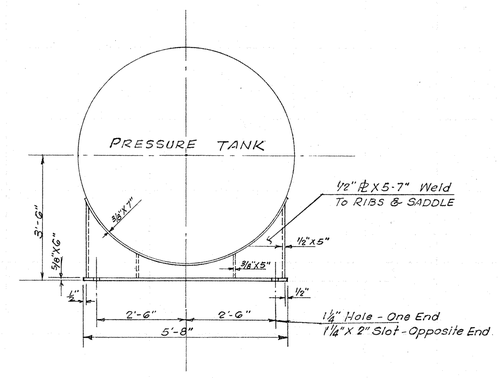

TANK SUPPORT
Scale: 1/2" = 1'-0"

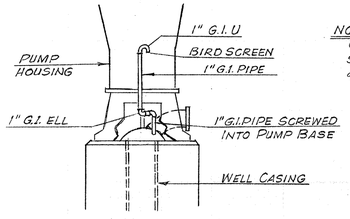

DETAIL AIR EXCHANGE TO WELL CASING
N.T.S.

NOTE:
Contractor to Furnish Shop Dwg. for Installation of Air Exchanger.

SHANER, HICKS & CHERRY
Consulting Engineers
HOUSTON, TEXAS

HARRIS COUNTY WATER CONTROL & IMPROVEMENT DISTRICT No. 111

WATER TREATMENT PLANT No. 1

SECTIONS and DETAILS

Scale: As Shown Date: April, 1971

By: [signature] ENGINEER

Approved:

Approved:

SHEET 4 of 5 SHEETS

W.P. 0148

City of Houston
APPROVED

FILE NO. 19634

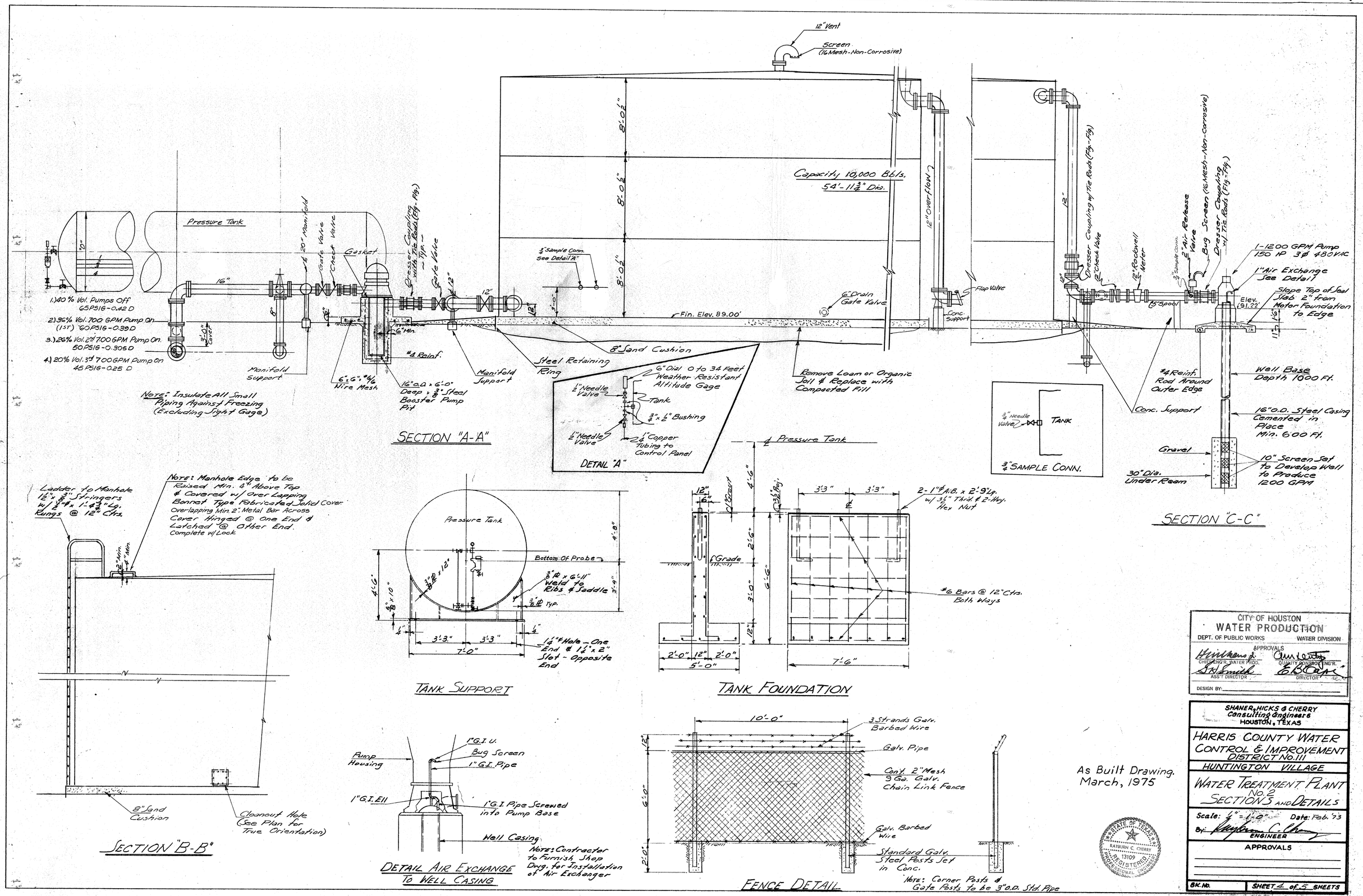
12" Vent
Screen (16 Mesh-Non-Corrosive)
Capacity, 10,000 Bbls.
54'-11 3/8" Dia.
8'-0 1/2"
8'-0 1/2"
8'-0 1/2"
12" Overflow
Pressure Tank
1.) 40% Vol. Pumps Off 65 PSIG-0.42 D
2.) 36% Vol. 700 GPM Pump On (1st) 60 PSIG-0.39 D
3.) 26% Vol. 2nd 700 GPM Pump On. 50 PSIG-0.30 D
4.) 20% Vol. 3rd 700 GPM Pump On 45 PSIG-0.25 D
Note: Insulate All Small Piping Against Freezing (Excluding Sight Gage)
Manifold Support
20" Manifold
Gate Valve
Check Valve
Gasket
Dresser Coupling with Tie Rods (Fig.-Fig) - Typ. -
Gate Valve
3/4" Sample Conn. See Detail "A"
Fin. Elev. 89.00'
6" Drain Gate Valve
Flap Valve
Conc. Support
8" Sand Cushion
Steel Retaining Ring
Manifold Support
6"x6"; #6/6 Wire Mesh
16" O.D. x 6'-0" Deep x 3/8" Steel Booster Pump Pit
#4 Reinf.
Remove Loam or Organic Soil & Replace with Compacted Fill
Dresser Coupling w/ Tie Rods (Fig.-Fig)
12" Check Valve
12" Rockwell Meter
3/4" Sample Conn.
2" Air Release Valve
Bug Screen (16 Mesh-Non-Corrosive)
Dresser Coupling w/ Tie Rods (Fig.-Fig.)
1-1200 GPM Pump 150 HP 3Ø 480 VAC
1" Air Exchange See Detail
Slope Top of Seal Slab 2" from Motor Foundation to Edge
Elev. (91.22')
(5" Spool)
#4 Reinf. Rod Around Outer Edge
Conc. Support
Well Base Depth 1000 Ft.
16" O.D. Steel Casing Cemented in Place Min. 600 Ft.
Gravel
30" Dia. Under Ream
10" Screen Set to Develop Well to Produce 1200 GPM
SECTION "A-A"
SECTION "C-C"
1/2" Needle Valve
Tank
3/4" x 1/2" Bushing
1/2" Needle Valve
1/4" Copper Tubing to Control Panel
DETAIL "A"
3/4" Needle Valve
TANK
3/4" SAMPLE CONN.
Ladder to Manhole 1 1/2" x 3/8" Stringers w/ 1/2" x 1'-4 3/4" Lg. Rungs @ 12" Ctrs.
Note: Manhole Edge to be Raised Min. 4" Above Top & Covered w/ Over Lapping Bonnet Type Fabricated Solid Cover. Overlapping Min. 2" Metal Bar Across Cover Hinged @ One End & Latched @ Other End. Complete w/ Lock
8" Sand Cushion
Cleanout Hole (See Plan for True Orientation)
SECTION "B-B"
Pressure Tank
Bottom Of Probe
3/8" R x 6'-11" Weld to Ribs & Saddle
3/8" R Typ.
1 1/4" Hole - One End & 1 1/4" x 2" Slot - Opposite End
TANK SUPPORT
Pressure Tank
2-1" ø A.B. x 2'-9 1/2" Lg. w/ 3 1/2" Thrd. & 2-Hvy. Hex Nut
#6 Bars @ 12" Ctrs. Both Ways
Grade
TANK FOUNDATION
Pump Housing
1" G.I. U.
Bug Screen
1" G.I. Pipe
1" G.I. Ell
1" G.I. Pipe Screwed into Pump Base
Well Casing
Note: Contractor to Furnish Shop Dwg. for Installation of Air Exchanger
DETAIL AIR EXCHANGE TO WELL CASING
3 Strands Galv. Barbed Wire
Galv. Pipe
Conf. 2" Mesh 9 Ga. Galv. Chain Link Fence
Galv. Barbed Wire
Standard Galv. Steel Posts Set in Conc.
FENCE DETAIL
Note: Corner Posts & Gate Posts to be 3" O.D. Std. Pipe
As Built Drawing. March, 1975
STATE OF TEXAS
RAYBURN C. CHERRY
13109
REGISTERED PROFESSIONAL ENGINEER
CITY OF HOUSTON
WATER PRODUCTION
DEPT. OF PUBLIC WORKS
WATER DIVISION
APPROVALS
CHIEF ENGR. WATER PROD.
QUALITY CONTROL ENGR.
ASS'T DIRECTOR
DIRECTOR
DESIGN BY:
SHANER, HICKS & CHERRY
Consulting Engineers
HOUSTON, TEXAS
HARRIS COUNTY WATER CONTROL & IMPROVEMENT DISTRICT No. 111
HUNTINGTON VILLAGE
WATER TREATMENT PLANT No. 2
SECTION 5 AND DETAILS
Scale: 1/4" = 1'-0"
Date: Feb. '73
By:
ENGINEER
APPROVALS
BK. No.
SHEET 4 of 5 SHEETS
WP-0148
City of Houston Public Works
WD-6774
FILE NO. 79634

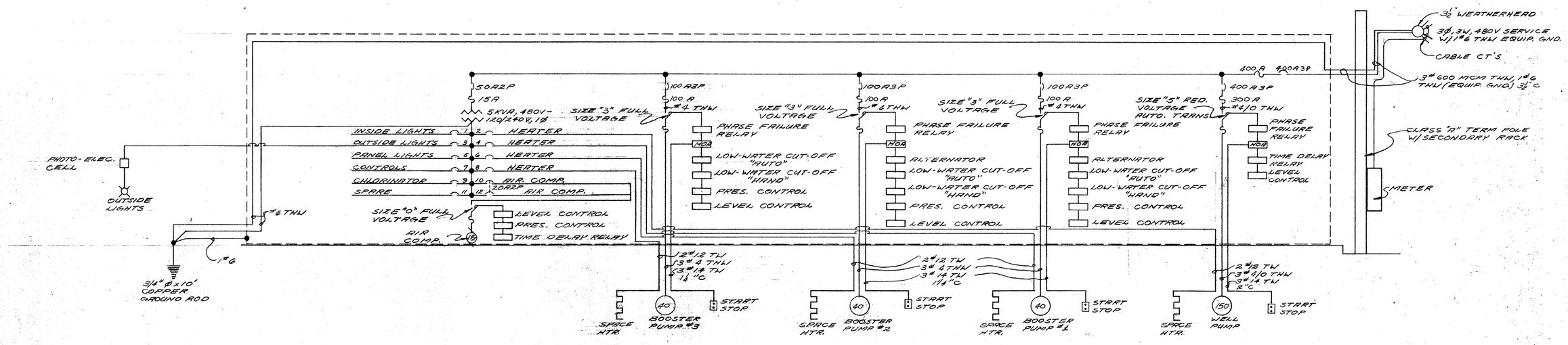

ELECTRICAL ONE LINE DIAGRAM

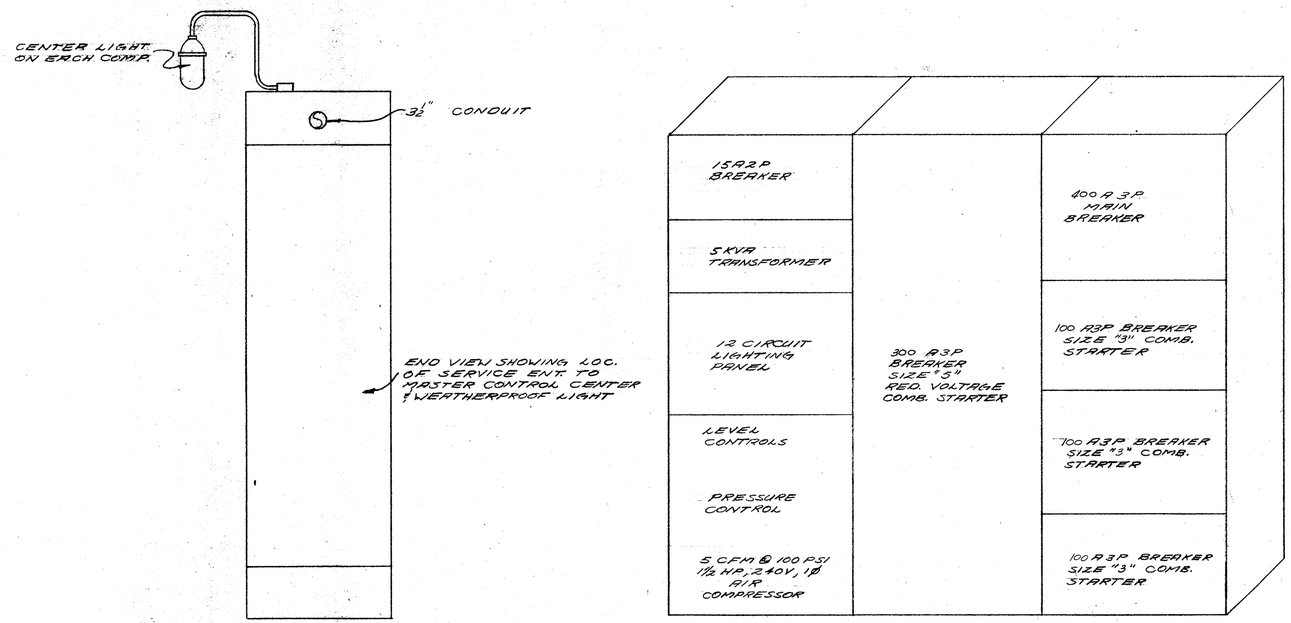

MASTER CONTROL CENTER

LIGHTING FIXTURES

CHLORINATOR BLDG.
P/S #14, 100W LAMP

FLOOD LIGHTS
SWIVELIER #13562 COVER WITH 2#12001 LAMP HOLDERS, 150W PAR 38 FLOOD LAMPS.

MASTER CONTROL CENTER
3-SWIVELIER #15230 WITH #15910 GLOBES 100W LAMPS, CENTER ON EACH COMP.

As Built Drawing. March, 1975

STATE OF TEXAS
RAYBURN C. CHERRY
13109
REGISTERED PROFESSIONAL ENGINEER

CITY OF HOUSTON
WATER PRODUCTION
DEPT. OF PUBLIC WORKS — WATER DIVISION
APPROVALS
CHIEF ENG'R, WATER PROD. — QUALITY CONTROL ENG'R.
ASS'T DIRECTOR — DIRECTOR
DESIGN BY:

SHANER, HICKS & CHERRY
Consulting Engineers
HOUSTON, TEXAS

HARRIS COUNTY WATER CONTROL & IMPROVEMENT DISTRICT No. 111
HUNTINGTON VILLAGE
WATER TREATMENT PLANT No. 2
ELECTRICAL LAYOUT

Scale: NO SCALE — Date: Feb '73
By: ENGINEER
APPROVALS

BK. No. — SHEET 5 of 5 SHEETS
City of Houston Public Works — FILE NO. 19634

~~WP-0174~~ WP-0148

8" Shell to Exist. Curb

12" Water Line By Others

①

②

15' 15'
30' Easement

3' 9' 3'

Storm Sewer By Others

NOTE:
Contractor to notify Mr. Claude Emory with Entex, Inc. (United Gas Co.) Phone No. 228-5111 Ext. 243 48 Hours Prior to Actual Construction

2" Gas Line

5' Easement

162.32'

34.32'

8" Stabilized Shell

Shell Pipeline Company
30' Easement
Vol. 295; P-117 F.B.C.D.R.

Exist. 24" Pipeline
Top Elev. 81.60

NOTE:
Contractor to notify Mr. Doyle Campbell with Shell Pipeline Co. Phone No. 795-3866 48 Hours Prior to Actual Construction

Exist 12"

START OF CONTRACT

143.93' N70°55'50"W

1'

6' Cedar Fence

Swale

12' Double Gate

24" G.C.I.P.

Exist. Swale

"E" Inlet By Others

20'

Esmt.

83.2

82.20

84.6

Ex. 24" Culvert

82.22

83.3

Exist. Swale

Exist. "E" Inlet By Others

NOTE:
Contractor Shall Submit Design and Detail Drawings for Foundation in accordance with AWWA D-100 Specifications, drawing Sheet 5 & Job Specs.

6' Cedar Fence

61'-0"

Grade to Drain @ 0.10%

Reserve "C"

CB-3 Elev. 84.1'

Ladder

Grade to Drain @ 0.10%

6' Cedar Fence

100.0' N19°04'10"E

Ex. Shell Road

65'-0"

43.93' N1°20'50"W

6' Utility Easement

6' Cedar Fence

12"

Valve & Box

Swale

CB-1 Elev. 84.4'

Over Flow & Slab

Swale

6" Drain

30° 30° 30° 30° 60° 60° 60° 60°

84.2 83.6 83.6 84.2 83.9 83.6 84.2

CB-2 Elev. 84.2'

CB-4 Elev. 84.4'

3 mag Gate

Exist. Power Line

6' Cedar Fence

100.0' S88°39'10"W

1'

84.7'

Exist Swale

N

CITY OF HOUSTON
WATER PRODUCTION
DEPT. OF PUBLIC WORKS — WATER DIVISION

APPROVALS

CHIEF ENG'R, WATER PROD. — ASS'T DIRECTOR
QUALITY CONTROL ENG'R. — DIRECTOR

DESIGN BY:

SHANER, HICKS & CHERRY
Consulting Engineers
HOUSTON, TEXAS

HARRIS COUNTY WATER CONTROL & IMPROVEMENT DISTRICT NO. 111

HUNTINGTON VILLAGE PATIO HOMES

PROPOSED ELEVATED WATER STORAGE ~ GENERAL PLAN

STATE OF TEXAS — RAYBURN C. CHERRY — 13109 — REGISTERED PROFESSIONAL ENGINEER

Scale: 1" = 10'

Date: May, 1976

By: Rayburn C. Cherry
ENGINEER

WP-0148

SHEET 4 OF 5 SHEETS

CITY OF HOUSTON
~~WP-0147A~~ FILE NO. 19632

Column Ladder w/Cage OSHA Standard

Bottom 8' Section Hinged & Provide Pulley w/Cable for Raising

Roof Ladder w/Cage OSHA Standards

24" Manhole Complete w/Hinges, Lock, 4" High Curb & 2" Overlap w/Cover

Roof Vent (Min. 12") Non-Corrosive Screen (Stainless Steel)

24" Flanged Vent

5' ϕ Riser

3/4" Sample Conn. w/Valve & Plug (2' Above Base)

18" Manhole

12" C.I. Inlet-Outlet

3/4" Conn. w/Valve & 0-200 ft. Altitude Gage 4 1/2" ϕ Dial

4'-0" Cover

1'-6"

6" Drain Valve & Lock

30" Wide (Min.) Balcony

12" Overflow ~ Bracket to Structure

12" Self-Sealing Hinged Flap Valve

Top of Overflow Elev. 238.5'

Elev. 206.17'

32'-4" ± (Min.)

120'-8" ±

153'-0"

6"

9"

Elev. 85.5'

4'x 6' Splash Pad w/ 6" Curb 6x6x 1/8 W.W.M.

Foundation Design

1) Maximum Soil Bearing Value of 4,000 psf. 7'-6" Ft. below the Foundation Top Elevation of 85.5'

2) Concrete shall develop a minimum Compressive Strength of 3,000 psi at 28 days.

3) Reinforcing Steel ASTM-A615 Grade 40.

4) Anchor Bolts shall be hot rolled mild carbon steel ASTM-A36 & Hot Dipped galvanized.

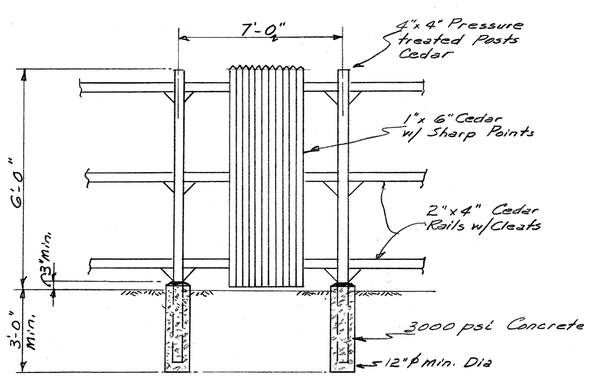

TYPICAL CEDAR FENCE DETAIL

CITY OF HOUSTON
WATER PRODUCTION
DEPT. OF PUBLIC WORKS — WATER DIVISION

APPROVALS

CHIEF ENG'R, WATER PROD. — QUALITY CONTROL ENG'R.
ASS'T DIRECTOR — DIRECTOR

DESIGN BY:

STATE OF TEXAS — RAYBURN C. CHERRY — 13109 — REGISTERED PROFESSIONAL ENGINEER

SHANER, HICKS & CHERRY
Consulting Engineers
HOUSTON, TEXAS

HARRIS COUNTY WATER CONTROL & IMPROVEMENT DISTRICT No. 111

HUNTINGTON VILLAGE PATIO HOMES

PROPOSED ELEVATED WATER STORAGE ELEVATION

Scale:

Date: May, 1976

By: ENGINEER

WP-0148

SHEET 5 OF 5 SHEETS

City of Houston
Water Dept.

FILE NO. 49632

CITY OF HOUSTON

DEPARTMENT OF PUBLIC WORKS AND ENGINEERING
ENGINEERING AND CONSTRUCTION DIVISION

FLOW METERS AT VARIOUS FACILITIES

GFS No. S-0936-08-3, FILE No. WA-10813

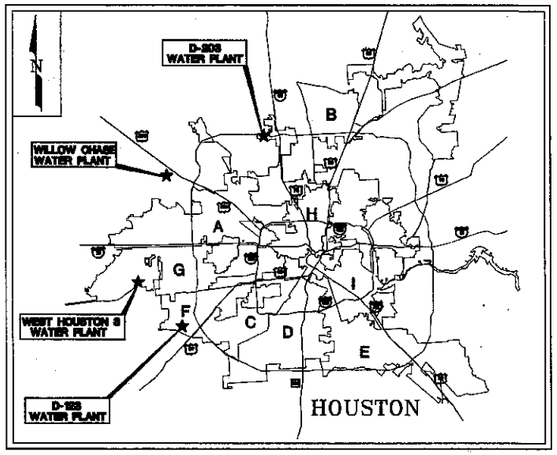

LOCATION MAP
N.T.S.

WATER PLANT	ADDRESS	KEY MAP
D-123	10003 S. KIRKWOOD	529-S
D-203	1255 GEARS ROAD	372-P
WEST HOUSTON No. 3	14925 S. RICHMOND	487-Z
WILLOW CHASE	13135 MISTY WILLOW	369-M

AS BUILT

MAYOR
BILL WHITE

CONTROLLER
ANNISE D. PARKER

DISTRICT COUNCIL MEMBERS

TONI LAWRENCE
DISTRICT A

JARVIS JOHNSON
DISTRICT B

ANNE CLUTTERBUCK
DISTRICT C

ADA EDWARDS
DISTRICT D

ADDIE WISEMAN
DISTRICT E

M.J. KHAN, P.E.
DISTRICT F

PAM HOLM
DISTRICT G

ADRIAN GARCIA
DISTRICT H

CAROL ALVARADO
DISTRICT I

COUNCIL MEMBERS AT-LARGE

PETER BROWN
POSITION 1

SUE LOVELL
POSITION 2

SHELLEY SEKULA-GIBBS, M.D.
POSITION 3

RONALD C. GREEN
POSITION 4

MICHAEL BERRY
POSITION 5

PTI INCORPORATED
ENGINEERS, ARCHITECTS, PLANNERS
2925 BRIARPARK DRIVE, SUITE 950
HOUSTON, TEXAS 77042
PHONE: (713) 266-8145

SEAL: STATE OF TEXAS — DAVID L. COLLINS — 37800

SURVEYED BY: MARTINEZ GUY & MAYBIK, Inc.
FB No. P-5262

WATER 12-20-05
CONSTRUCTION 12-20-05
WASTEWATER
TRAFFIC AND TRANSPORTATION 12-20-05
STORM WATER
SPONSOR DEPARTMENT 12/20/05
STREET & BRIDGE
CHIEF ENGINEER
CITY ENGINEER 1/5/06 DATE
DIRECTOR OF PUBLIC WORKS AND ENGINEERING 1/6/06 DATE

PUBLIC WORKS — 41248 — CITY DRAWING NUMBER

SHEET NO. 01 OF 17 SHEETS

CAD FILENAME: 1_Flowmeter-Cover.dwg

INDEX OF DRAWINGS:

SHEET NO.	DESCRIPTION
01	COVER SHEET: PROJECT TITLE, LOCATION MAP.
02	INDEX OF DRAWINGS, GENERAL CONSTRUCTION NOTES, PLAN AND PROFILE SYMBOLS, AND UTILITY NOTES.
03	FLOW METERS – LOCATION PLANS
04	FLOW METERS – SITE PLAN – DISTRICT 123 WATER PLANT
05	FLOW METERS – SITE PLAN – DISTRICT No. 203 WATER PLANT
06	FLOW METERS DEMOLITION SITE – PLAN – DISTRICT No. 203 WATER PLANT
07	FLOW METERS SITE – PLAN – WEST HOUSTON No. 3 WATER PLANT
08	FLOW METERS SITE – PLAN – WILLOWCHASE WATER PLANT
09	FLOW METERS VAULT DETAILS
10	FLOW METERS VAULT – STRUCTURAL DETAILS
11	FLOW METERS – MISC. DETAILS
12	MISCELLANEOUS DETAILS AND PROJECT SIGN
13	ELECTRICAL SITE PLAN – WILLOWCHASE WATER PLANT
14	ELECTRICAL SITE PLAN – DISTRICT 123 WATER PLANT
15	ELECTRICAL SITE PLAN – DISTRICT No. 203 WATER PLANT
16	ELECTRICAL SITE PLAN – WEST HOUSTON No. 3 WATER PLANT
17	ELECTRICAL DETAILS

SYMBOL LEGEND

R R M	RADIO RELAY MAST		HL&P TOWER LEG		WATER METER
	TRAFFIC SIGNAL CONTROL BOX		WATER VALVE		LIGHT
	GAS LAMP		TRANSFORMER BOX		TELEPHONE POLE
	MAIL BOX		TRAFFIC LIGHT STANDARD		TELEPHONE JUNCTION BOX
	CENTER LINE OF STREET		GAS VALVE		FENCE CORNER
	GREASE TRAP	G	GAS METER	B	'B' INLET
	TREE		GAS SERVICE LINE MARKER	B-B	'B–B' INLET
	BUSH	HLP	HL&P MANHOLE	C	'C' INLET (ALL)
	GATE		SERVICE POLE	E	'E' INLET
	GUY WIRE		HL&P UNDG. CABLE MARKER	S.W.B.T.	S.W.B.T. M H
	WATER WELL		ADVERTISEMENT SIGN		UNDG. TELE. CABLE MARKER
	FENCE LINE(CHAIN LINK)		CABLE TV UNDG. MARKER		PUBLIC PHONE
	FENCE LINE(WOOD)		STREET BARRICADE		CABLE TV MARKER
	BRICK PILLAR		CORE BORE	TV	CABLE TV JUNCTION BOX
	METAL POST (BOLLARD)		EXIST. SANITARY M H		PIPELINE MARKER
	FLAG POLE		STORM M H		VENT PIPE
	POWER POLE		WELLHEAD		SIGN STANDARD
	STREET LIGHT STANDARD		SANITARY CLEAN OUT		OVERHEAD POWER LINES
	TRAFFIC SIGN	A	'A' INLET		ELECTRIC PUMP
ECB	ELECTRICAL JUNCTION BOX		FIRE HYDRANT		PROP. PROJECT SIGN
	WL TO BE REMOVED				PROP. HARD HAT SIGN
					PROP. 200±L.F. SAFETY FENCE

PLAN AND PROFILE SYMBOLS

	PLAN – EXISTING
MATCH LINE	
TRANSIT LINE	9 10
CENTERLINE OF RIGHT-OF-WAY	
PROPERTY LINE	
DITCHES, LEFT AND RIGHT	
FENCE LINE	Chain Link Barb Wire or Other
EDGE CONCRETE	
EDGE ASPHALT	
EDGE SHELL OR GRAVEL	
THEORETICAL PROPERTY LINE	
DIMENSION LINE	28'
RAILROAD	
LOT LINE	
DRAINAGE EASEMENT	
FILL EASEMENT	
H.L. & P. Co. CONDUIT	
GAS LINE	
WESTERN UNION CONDUIT	
S.W.B.T. CONDUIT	
IRON PIPE OR IRON ROD MONUMENTS	3/4"I.P. I.R.
POINT OF INTERSECTION (P.I.)	
POINT OF CURVE (P.C.) OR POINT OF TANGENCY (P.T.)	
POWER POLE	P.P.
POWER POLE DOWN GUY	P.P. DOWN GUY
STREET SIGN	
TRAFFIC SIGNAL POLE	
LUMINARIES	
STD. LIGHT	
TREE	
HEDGE	HEDGE
CULVERT PIPE	

PLAN	EXISTING	PROPOSED
WATER VALVE		
FIRE HYDRANT		
WATER METER		
TAPPING SLEEVE & VALVE		
REDUCER		
ROUND CONNECTIONS		
SAN. SWR. MANHOLE & CLEANOUT		
STORM SEWER MANHOLE		
WATER LINE 24" & SMALLER		
WATER LINE 30" & LARGER		
SAN. SEWER 24" & SMALLER		
SAN. SEWER 30" & LARGER		
STM. SEWER 24" & SMALLER		
STM. SEWER 30" & LARGER		

PROFILE	EXISTING	PROPOSED
N. & E. PROPERTY LINE		
S. & W. PROPERTY LINE		
N. & E. DITCH OR CURB		
S. & W. DITCH OR CURB		
CENTER LINE R.O.W.		
WATER LINE ALL SIZES		
SAN. SEWER 24" & SMALLER		
SAN. SEWER 30" & LARGER		
STM. SEWER 24" & SMALLER		
STM. SEWER 30" & LARGER		
SAN. SWR. MANHOLE AND CLEANOUT		
STM. SWR. MANHOLE		
INLET		
H.L. & P. Co. MANHOLE		

GENERAL CONSTRUCTION NOTES:

1. ALL UTILITIES PRESENTED ON THESE DRAWINGS ARE SHOWN BASED ON THE BEST AVAILABLE INFORMATION. CONTRACTOR SHALL VERIFY IN THE FIELD THE EXACT LOCATIONS AND ELEVATIONS PRIOR TO COMMENCING CONSTRUCTION. CONTRACTOR SHALL NOTIFY TEXAS ONE CALL AT 713–223–4567 AT LEAST 48 HOURS BEFORE PROCEEDING WITH ANY EXCAVATION.
2. CONTRACTOR SHALL BE FULLY RESPONSIBLE FOR ANY DAMAGES TO EXISTING WATER, WASTEWATER, STORM WATER LINES AND TRAFFIC CONTROL DEVICES. ALL DAMAGES SHALL BE REPAIRED IN ACCORDANCE WITH THE CITY OF HOUSTON, DEPARTMENT OF PUBLIC WORKS AND ENGINEERING'S "STANDARD CONSTRUCTION SPECIFICATIONS" AND AT NO COST TO THE CITY OF HOUSTON.
3. CONTRACTOR SHALL NOTIFY THE OFFICE OF THE CITY ENGINEER, DEPARTMENT OF PUBLIC WORKS AND ENGINEERING AT 713–863–1450 FOR INSPECTION AT LEAST 48 HOURS PRIOR TO COMMENCING THE CONSTRUCTION.
4. ADEQUATE DRAINAGE SHALL BE MAINTAINED AT ALL TIMES DURING CONSTRUCTION AND ANY DRAINAGE DITCH OR STRUCTURE DISTURBED DURING CONSTRUCTION SHALL BE RESTORED TO THE SATISFACTION OF THE OWNING AUTHORITY.
5. THE CONTRACTOR SHALL COMPLY WITH THE LATEST EDITION OF OSHA REGULATIONS AND THE STATE OF TEXAS LAWS CONCERNING EXCAVATION.
6. SAND ENCASEMENT REQUIRED FOR ALL BURIED WATER LINE WITH BANK SAND 6 INCHES BELOW, AROUND, AND ABOVE PIPE.
7. ALL PIPING UNDER PAVEMENT AND WITHIN ONE FOOT OF PAVEMENT EDGE TO BE BACKFILLED WITH BANK SAND TO A POINT ONE FOOT BELOW PAVEMENT SUBGRADE. REMAINING BACKFILL TO BE DRY REMOVED MATERIAL COMPACTED TO 95% STANDARD PROCTOR DENSITY.

UTILITY NOTES:

HOUSTON LIGHTING AND POWER COMPANY

OVERHEAD LINES MAY EXIST ON THE PROPERTY. WE HAVE NOT ATTEMPTED TO MARK THOSE LINES SINCE THEY ARE CLEARLY VISIBLE, BUT THE CONTRACTOR SHOULD LOCATE THEM PRIOR TO BEGINNING ANY CONSTRUCTION. TEXAS LAW, SECTION 752, HEALTH AND SAFETY CODE, FORBIDS ALL ACTIVITIES IN WHICH PERSONS OR THINGS MAY COME WITHIN SIX (6) FEET OF LIVE OVERHEAD HIGH VOLTAGE LINES. CONTRACTORS AND OWNERS ARE LEGALLY RESPONSIBLE FOR SAFETY OF CONSTRUCTION WORKERS UNDER THIS LAW. THIS LAW CARRIES BOTH CRIMINAL AND CIVIL LIABILITY. TO ARRANGE FOR LINES TO BE TURNED OFF OR MOVED, CALL RELIANT ENERGY AT 713–659–6457.

CENTER POINT ENERGY

LOCATION OF CENTER POINT ENERGY MAIN LINES (TO INCLUDE UNIT GAS TRANSMISSION, AND/ OR INDUSTRIAL GAS SUPPLY CORPORATION WHERE APPLICABLE) ARE SHOWN IN AN APPROXIMATE LOCATION ONLY. SERVICE LINES ARE USUALLY NOT SHOWN. THE CONTRACTOR SHALL CONTACT THE UTILITY COORDINATING COMMITTEE AT 713/223–4567 OR 1–800–669–8344 A MINIMUM OF 48 HOURS PRIOR TO CONSTRUCTION TO HAVE MAIN AND SERVICE LINES FIELD LOCATED. THE CONTRACTOR SHALL DETERMINE THE EXACT LOCATION BEFORE COMMENCING WORK AND AGREE TO BE FULLY RESPONSIBLE FOR ANY DAMAGES CAUSED BY HIS FAILURE TO EXACTLY LOCATE AND PRESERVE THESE UNDERGROUND FACILITIES.

A. WHEN CENTER POINT ENERGY PIPE LINE MARKINGS ARE NOT VISIBLE, CALL (713) 967–8037 (7:00 AM. TO 4:30 PM.) FOR STATUS OF LINE LOCATION REQUEST BEFORE EXCAVATION BEGINS.

B. WHEN EXCAVATING WITHIN EIGHTEEN INCHES (18") OF THE INDICATED LOCATION OF CENTER POINT ENERGY FACILITIES, ALL EXCAVATION MUST BE ACCOMPLISHED USING NON–MECHANIZED EXCAVATION PROCEDURES.

C. WHEN CENTER POINT ENERGY FACILITIES ARE EXPOSED, SUFFICIENT SUPPORT SHALL BE PROVIDED TO THE FACILITIES TO PREVENT EXCESSIVE STRESS ON THE PIPING.

SOUTHWESTERN TEL. CO.

THE LOCATIONS OF SBC FACILITIES ARE SHOWN IN AN APPROXIMATE WAY ONLY. THE CONTRACTOR SHALL DETERMINE THE EXACT LOCATION BEFORE COMMENCING WORK. HE AGREES TO BE FULLY RESPONSIBLE FOR ANY AND ALL DAMAGES WHICH MIGHT BE OCCASIONED BY THIS FAILURE TO EXACTLY LOCATE AND PRESERVE THESE UNDERGROUND UTILITIES.

THE CONTRACTOR SHALL CALL 1–800–344–8377 A MINIMUM OF 48 HOURS PRIOR TO CONSTRUCTION TO HAVE UNDERGROUND LINES FIELD LOCATED.

WHEN EXCAVATING WITHIN EIGHTEEN INCHES (18") OF THE INDICATED LOCATION OF SBC FACILITIES, ALL EXCAVATIONS MUST BE ACCOMPLISHED USING NON–MECHANIZED EXCAVATION PROCEDURES. WHEN BORING, THE CONTRACTOR SHALL EXPOSE THE SBC FACILITIES.

WHEN SBC FACILITIES ARE EXPOSED, THE CONTRACTOR WILL PROVIDE SUPPORT TO PREVENT DAMAGE TO THE CONDUIT DUCTS OR CABLES. WHEN EXCAVATING NEAR TELEPHONE POLES, THE CONTRACTOR SHALL BRACE THE POLE FOR SUPPORT.

AS BUILT

REV NO	DESCRIPTION	APP'D	DATE

PTI INCORPORATED
ENGINEERS, ARCHITECTS, PLANNERS
2925 BRIARPARK DRIVE, SUITE 950
HOUSTON, TEXAS 77042
PHONE: (713) 266-6145

DESIGN ENGINEER NAME
DAVID L. COLLINS
ADDRESS: 2925 Briar Park
Suite 950
Houston, Texas 77042
TEL. No.: 713–266–6145

SEAL:
STATE OF TEXAS
DAVID L. COLLINS
37847
REGISTERED PROFESSIONAL ENGINEER

SURVEYED BY:
MARTINEZ GUY & MAYBIK, Inc.
FB No. P–5262

CITY OF HOUSTON
DEPARTMENT OF PUBLIC WORKS AND ENGINEERING

FLOW METERS FOR VARIOUS FACILITIES

INDEX OF DRAWINGS
GENERAL CONSTRUCTION NOTES
PLAN AND PROFILE SYMBOLS
AND UTILITY NOTES

FILE NO.	WA–10813
GFS NO.	S–0936–08–3
DRAWING SCALE	N/A
CITY OF HOUSTON PM	RAJINDER SINGH
SHEET NO.	02 OF 17

PUBLIC WORKS
ADDENDUM NO.
41248
~~41128~~
CITY DRAWING NUMBER
HOUSTON

CAD FILENAME: 2_Flowmeter–Legend.dwg

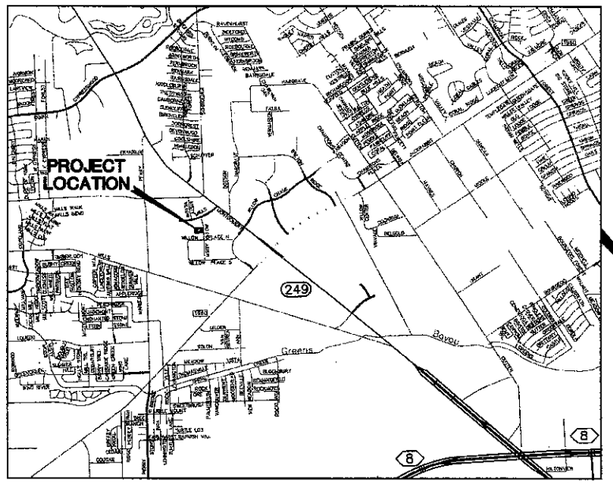

WILLOWCHASE WATER PLANT
13135 MISTY WILLOW
KEY MAP: 369-M

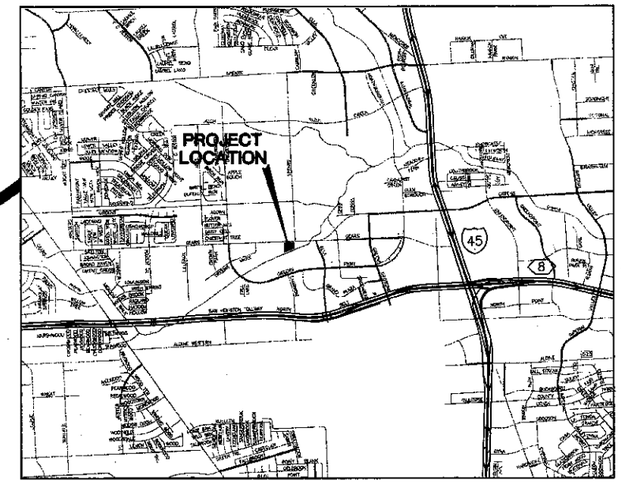

D-203 WATER PLANT
1255 GEARS ROAD
KEY MAP: 372-P

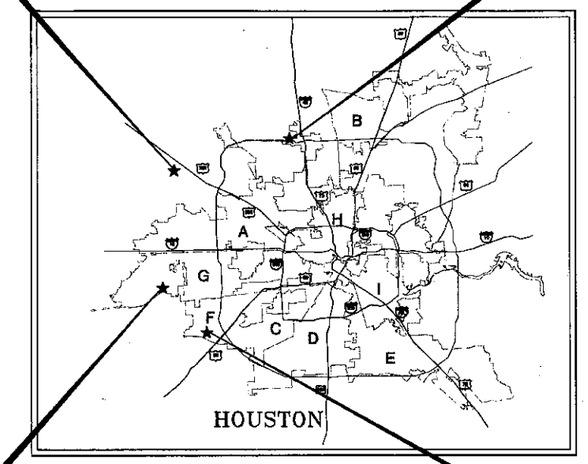

LOCATION MAP
N.T.S.

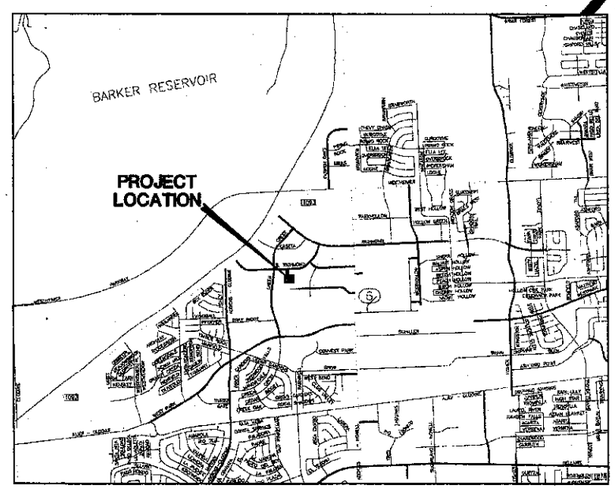

WEST HOUSTON 3 WATER PLANT
14925 S. RICHMOND
KEY MAP: 487-Z

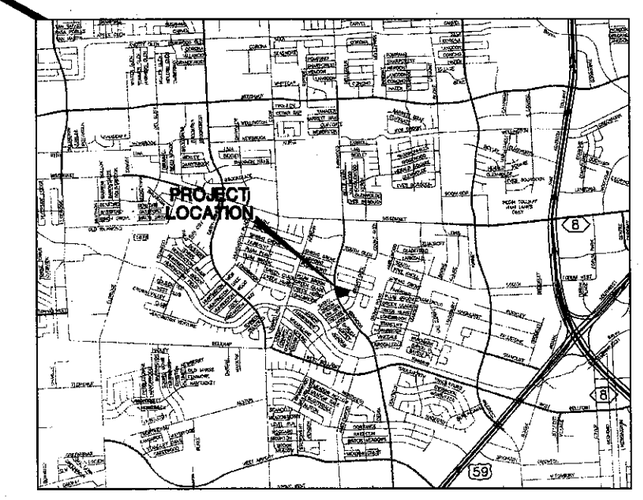

D-123 WATER PLANT
10003 S. KIRKWOOD ROAD
KEY MAP: 529-S

0 1500 3000 6000

N

AS BUILT

No.	Date	Revisions	App.

PRIVATE UTILITY LINES SHOWN

CENTER POINT ENERGY GAS — DATE

SBC APPROVED FOR UNDERGROUND CONDUIT FACILITIES ONLY SIGNATURE VALID FOR ONE YEAR — DATE

CENTER POINT ENERGY ELECTRIC — DATE
APPROVED ONLY FOR CROSSING UNDERGROUND DUCTLINES UNLESS NOTED. VALID AT TIME OF REVIEW ONLY.

CABLE COMPANY — DATE

PTI INCORPORATED
ENGINEERS, ARCHITECTS, PLANNERS
2925 BRIARPARK DRIVE, SUITE 950
HOUSTON, TEXAS 77042
PHONE: (713) 266-6145

DESIGN ENGINEER NAME
DAVID L. COLLINS
ADDRESS: 2925 Briar Park
Suite 950
Houston, Texas 77042
TEL. No.: 713-266-6145

SURVEYED BY:
MARTINEZ GUY & MAYBIK, Inc.
FB No. P-5262

SEAL: STATE OF TEXAS — DAVID L. COLLINS — 37890 — REGISTERED PROFESSIONAL ENGINEER

CITY OF HOUSTON
DEPARTMENT OF PUBLIC WORKS AND ENGINEERING

FLOW METERS FOR VARIOUS FACILITIES

FLOW METERS
LOCATION PLANS

FILE NO. WA-10813
GFS NO. S-0936-08-3
DRAWING SCALE
AS SHOWN
CITY OF HOUSTON PM
RAJINDER SINGH
SHEET NO. 03 OF 17

CITY DRAWING NUMBER 41248 ~~41120~~ HOUSTON, TEXAS

CAD FILENAME: 3_Location Plans.dwg

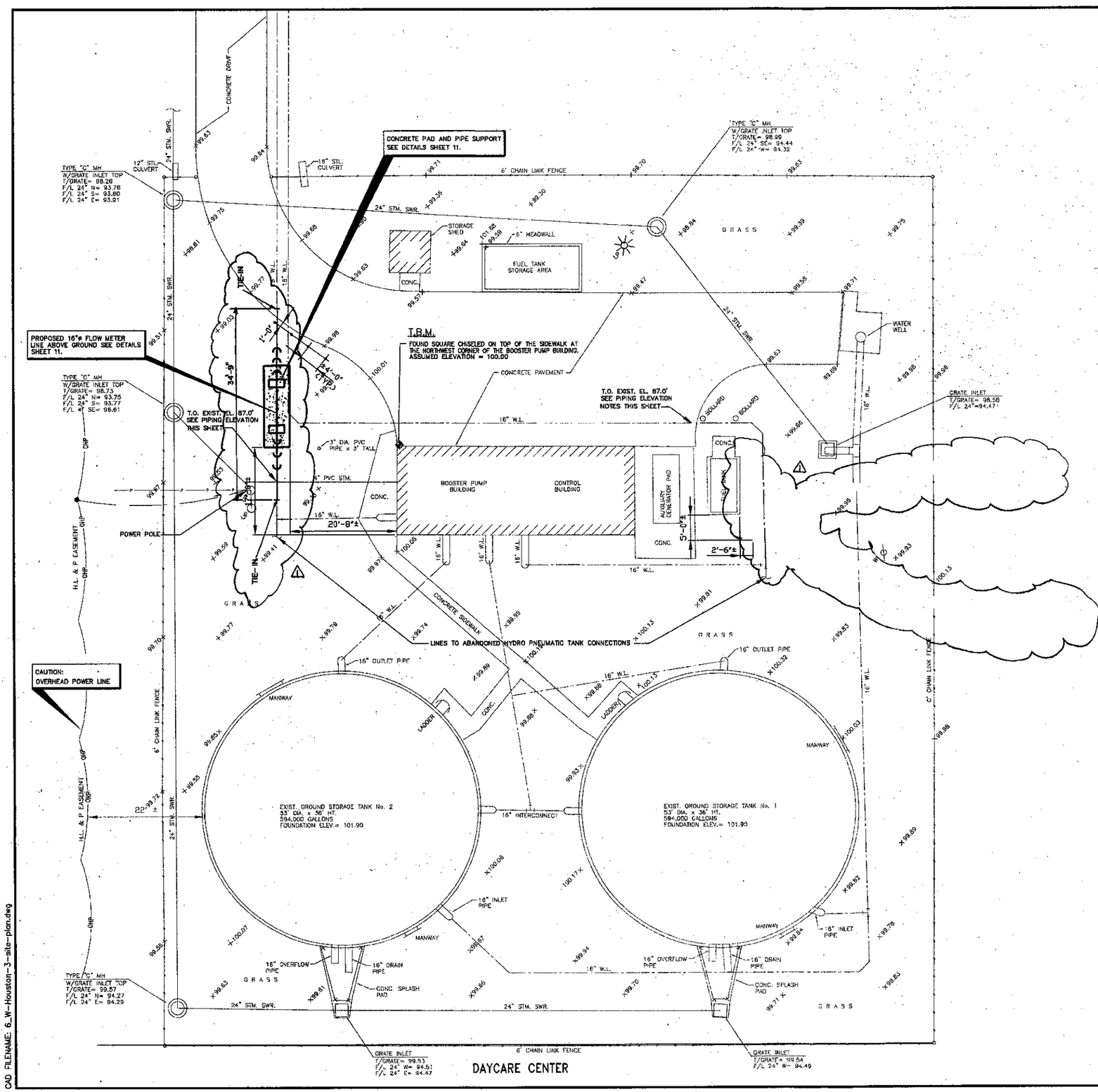

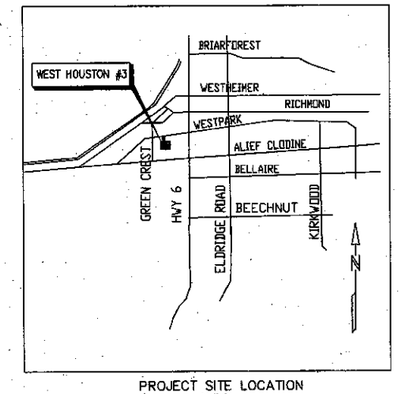

PROJECT SITE LOCATION
N.T.S.

BENCHMARK:

FOUND SQUARE CHISELED ON TOP OF THE SIDEWALK AT THE NORTHWEST CORNER OF THE BOOSTER PUMP BUILDING. ASSUMED ELEVATION = 100.00

NOTE:

ALL UDERGROUND INFORMATION SHOWN HERE ON IS TAKEN FROM EXISTING SURFACE FEATURES AND / OR DRAWINGS BY LOCKWOOD, ANDREWS & NEWNAM, INC., JOB No. 1570-20-001-000, W.P. 0238, DATED JUNE 1982. PIPE DELINEATION IS BASED ON THE SURVEYORS BEST INTERPRETATION OF THIS DATA.

AS BUILT

—WARNING—

OVERHEAD LINES MAY EXIST ON THE PROPERTY. CONTRACTOR SHOULD LOCATE THEM PRIOR TO BEGINNING ANY CONSTRUCTION. TEXAS LAW, SECTION 752, HEALTH & SAFETY CODE, FORBIDS ALL ACTIVITIES IN WHICH PERSONS OR THINGS MAY COME WITHIN SIX (6) FEET OF LIVE OVERHEAD HIGH VOLTAGE LINES. CONTRACTORS AND OWNERS ARE LEGALLY RESPONSIBLE FOR SAFETY OF CONSTRUCTION WORKERS UNDER THIS LAW. THIS LAW CARRIES BOTH CRIMINAL AND CIVIL LIABILITY. TO ARRANGE FOR LINES TO BE TURNED OFF OR MOVED CALL HL&P AT 713-228-7400. NO SEPARATE PAY.

NOTES:

1. SEE SHEET 02 FOR GENERAL CONSTRUCTION NOTES
2. CONTRACTOR SHALL RESTORE SITE TO EQUAL OR BETTER CONDITION UPON COMPLETION OF WORK.
3. FOR UNDERGROUND UTILITIES SEE NOTE No. 1 SHEET 02

GRAPHIC SCALE

0 5 10 20 30

(IN FEET)
1 inch = 10 ft.

LEGEND

- BOLLARD
- VERTICAL PIPE
- LIGHT POLE
- POWER POLE
- GUY ANCHOR
- WATER VALVE (BURIED)
- WATER VALVE (ABOVE GROUND)
- TV DENOTES TOP LID WATER VALVE
- TC DENOTES TOP CURB
- TP DENOTES TOP CIP PIPE
- OH DENOTES OVERHEAD ELEC. LINE
- 4" WOODEN POST
- SANITARY MANHOLE
- TREE
- WATER METER
- GRATE INLET
- "HARD HAT AREA" SIGN SEE DETAIL

No.	Date	Revisions	App.

PRIVATE UTILITY LINES SHOWN

CENTER POINT ENERGY GAS — DATE

SBC APPROVED FOR UNDERGROUND CONDUIT FACILITIES ONLY SIGNATURE VALID FOR ONE YEAR — DATE

CENTER POINT ENERGY ELECTRIC — DATE
APPROVED ONLY FOR CROSSING UNDERGROUND DUCTLINES UNLESS NOTED. VALID AT TIME OF REVIEW ONLY.

CABLE COMPANY — DATE

PTI INCORPORATED
ENGINEERS, ARCHITECTS, PLANNERS
2925 BRIARPARK DRIVE, SUITE 950
HOUSTON, TEXAS 77042
PHONE: (713) 266-6145

DESIGN ENGINEER NAME
DAVID L. COLLINS
ADDRESS: 2925 Briar Park Suite 950 Houston, Texas 77042
TEL. No.: 713-266-6145

SURVEYED BY:
MARTINEZ GUY & MAYBIK, Inc.
FB No. P-5262

SEAL: STATE OF TEXAS — DAVID L. COLLINS — 37847 — REGISTERED PROFESSIONAL ENGINEER

CITY OF HOUSTON
DEPARTMENT OF PUBLIC WORKS AND ENGINEERING

FLOW METERS FOR VARIOUS FACILITIES

FLOW METERS-SITE PLAN
WEST HOUSTON No. 3
WATER PLANT

FILE NO. WA-10813	
GFS NO. S-0936-08-3	
DRAWING SCALE	
1"= 10'	
CITY OF HOUSTON PM	
RAJINDER SINGH	
SHEET NO. 07 OF 17	

PUBLIC WORKS AND ENGINEERING — ACCEPTED AND FILED — 41248 — 41126 — CITY OF HOUSTON — HOUSTON

CAD FILENAME: 6_W-Houston-3-site-plan.dwg

NOTES:

1. FIELD INVESTIGATE THE EXISTING WATER FLOW DIRECTION BEFORE INSTALLING THE NEW FLOW METER SENSORS

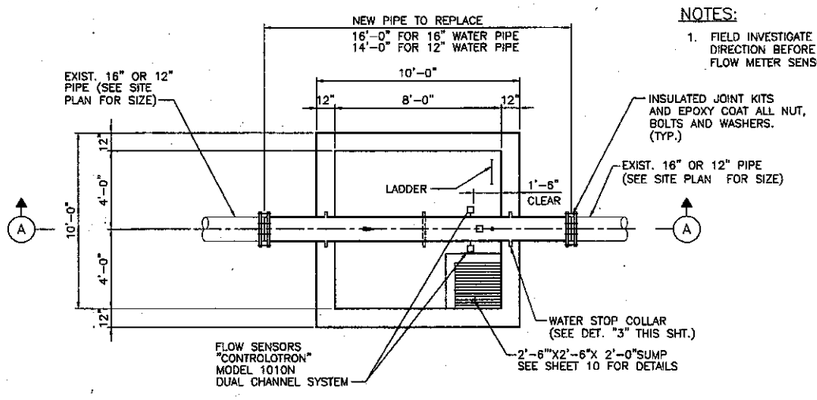

LOWER PLAN

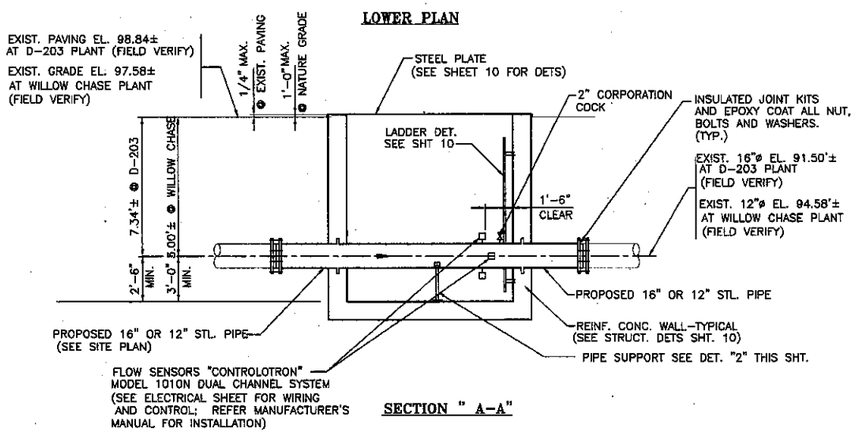

SECTION " A-A"

1/09 TYPICAL FLOW CONTROL WATER METER VAULT WITH WATER STOP COLLAR

SCALE: N.T.S. (REF. SHEET 05 & 08)

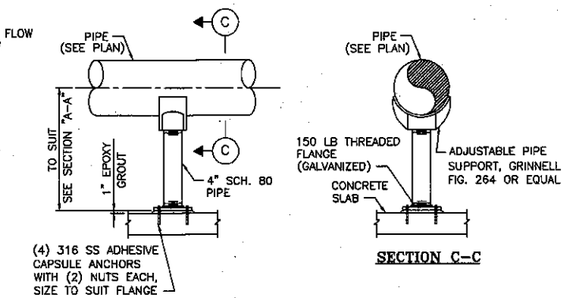

SECTION C-C

2/09 ADJUSTABLE PIPE SUPPORT

SCALE: N.T.S.

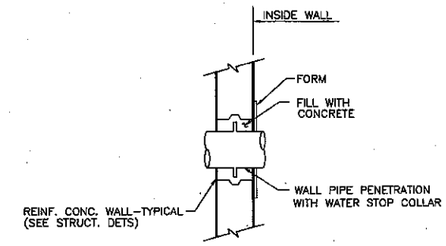

3/09 TYPICAL PIPE PENETRATION WITH WATER STOP COLLAR

SCALE: N.T.S.

AS BUILT

REV NO	DESCRIPTION	APP'D	DATE

PTI INCORPORATED
ENGINEERS, ARCHITECTS, PLANNERS
2925 BRIARPARK DRIVE, SUITE 950
HOUSTON, TEXAS 77042
PHONE: (713) 266-6145

DESIGN ENGINEER NAME
DAVID L. COLLINS
ADDRESS: 2925 Briar Park
Suite 950
Houston, Texas 77042
TEL. No.: 713-266-6145

SURVEYED BY:
MARTINEZ GUY & MAYBIK, Inc.
FB No. P-5262

SEAL: STATE OF TEXAS DAVID L. COLLINS 37800 REGISTERED PROFESSIONAL ENGINEER 12/15/05

CITY OF HOUSTON
DEPARTMENT OF PUBLIC WORKS AND ENGINEERING

FLOW METERS FOR VARIOUS FACILITIES

FLOW CONTROL WATER METER VAULT DETAILS

FILE NO. WA-10813
GFS NO. S-0936-08-3
DRAWING SCALE
N.T.S.
CITY OF HOUSTON FM
RAJINDER SINGH
SHEET NO. 09 OF 17

PUBLIC WORKS AND ENGINEERING ACCEPTED AND REVIEWED 41248 ~~41128~~ CITY DRAWING NUMBER HOUSTON, TEXAS

CAD FILENAME: 8_Meter Vault Details 1.dwg

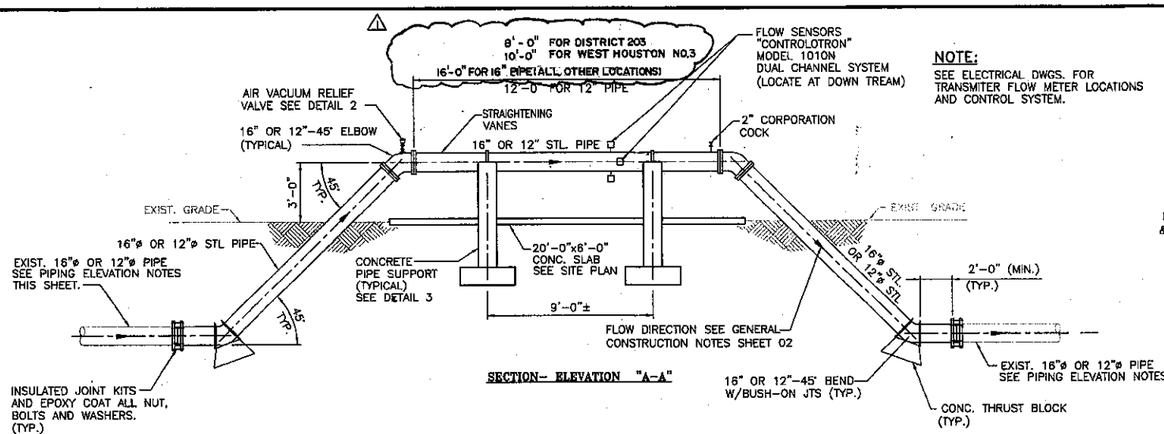

SECTION– ELEVATION "A–A"

NOTE:
SEE ELECTRICAL DWGS. FOR TRANSMITER FLOW METER LOCATIONS AND CONTROL SYSTEM.

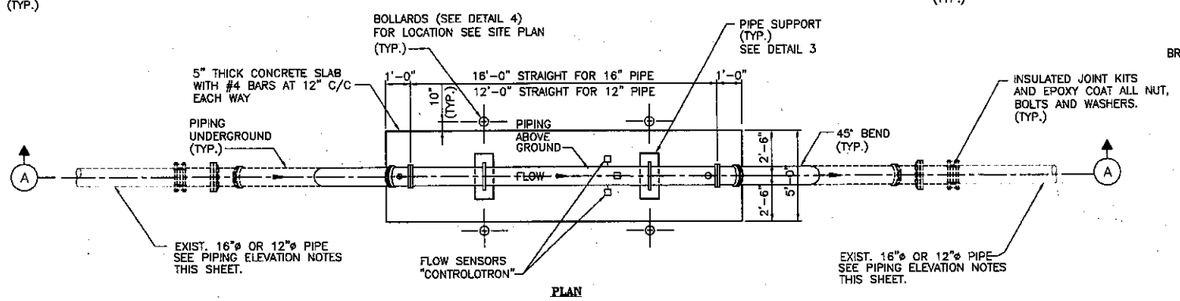

PLAN

1/11 ABOVE GROUND FLOW CONTROL WATER PIPE PLAN
SCALE: N.T.S.

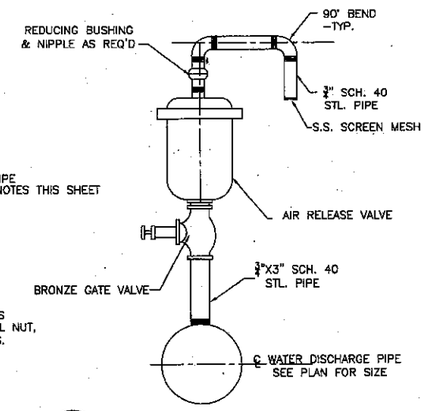

2/11 TYPICAL AIR RELIEF VALVE
SCALE: N.T.S.

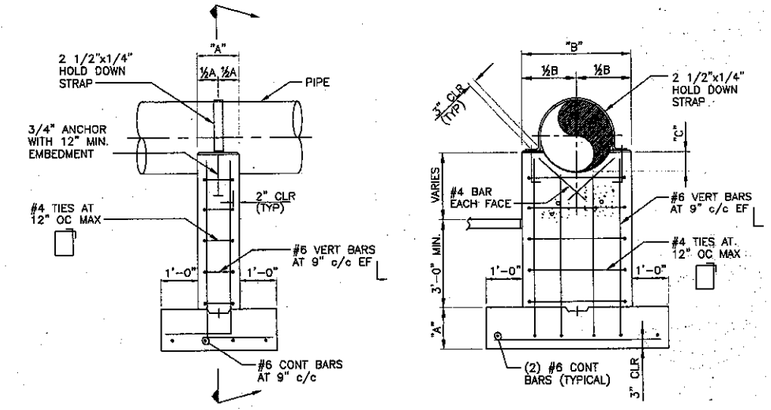

PIPE DIA	DIM A	DIM B	DIM C
12"	1'-0"	2'-6"	3 1/2"
16"	1'-6"	3'-0"	4 1/2"

3/11 TYPICAL PIPE SUPPORT FOR ABOVE GROUND METERS
SCALE: N.T.S.

EXIST. PIPING ELEVATION NOTES:

1. FOR EXISTING PIPING ELEVATION AT D-123 PLANT SEE SHEET 04 AND GENERAL NOTES SHEET 02 FOR DETAILS.
2. FOR EXISTING PIPING ELEVATION AT D-203 PLANT SEE SHEET 05 AND GENERAL NOTES SHEET 02 FOR DETAILS.
3. FOR EXISTING PIPING ELEVATION AT WEST HOUSTON #3 SEE SHEET 07 AND GENERAL NOTES SHEET 02 FOR DETAILS.
4. FOR EXISTING PIPING ELEVATION AT WILLOW CHASE PLANT SEE SHEET 08 AND GENERAL NOTES SHEET 02 FOR DETAILS.

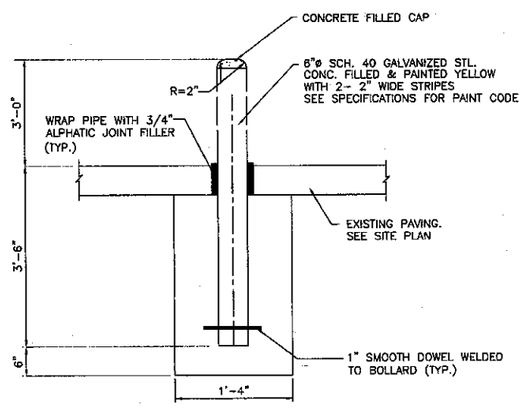

4/11 SINGLE BOLLARD DETAIL
SCALE: N.T.S.

AS BUILT

REV NO	DESCRIPTION	APP'D	DATE
1	AS BUILT		7/31/07

PTI INCORPORATED
ENGINEERS, ARCHITECTS, PLANNERS
2926 BRIARPARK DRIVE, SUITE 950
HOUSTON, TEXAS 77042
PHONE: (713) 266-6145

DESIGN ENGINEER NAME
DAVID L. COLLINS
ADDRESS: 2925 Briar Park
Suite 950
Houston, Texas 77042
TEL. No.: 713-266-6145

SURVEYED BY:
MARTINEZ GUY & MAYBIK, Inc.
FB No. P-5262

SEAL: STATE OF TEXAS — DAVID L. COLLINS — 17809 — PROFESSIONAL ENGINEER — 2/15/05

CITY OF HOUSTON
DEPARTMENT OF PUBLIC WORKS AND ENGINEERING

FLOW METERS FOR VARIOUS FACILITIES

CONTROL FLOW WATER PIPE ABOVE GROUND–DETAILS

FILE NO. WA-10813
GFS NO. S-0936-08-3
DRAWING SCALE
N.T.S.
CITY OF HOUSTON PM
RAJINDER SINGH
SHEET NO. 11 OF 17

PUBLIC WORKS & ENGINEERING — 41248 — CITY OF HOUSTON — HOUSTON, TEXAS

CAD FILENAME:

NOTES:

1. ENTER BUILDING LOW ON WALL NEAR EXISTING PLC CABINET. SEAL PENETRATION WATER TIGHT AND REPAIR WALL TO ORIGINAL FINISH.
2. CONDUITS SHALL NOT BE ROUTED ACROSS WALKWAYS, PATHS OF ACCESS, TRAVEL OR EGRESS. ROUTE BENEATH GRATING, AROUND CONCRETE STRUCTURES OR AROUND EQUIPMENT. DO NOT ROUTE IN CONFLICT WITH OTHER PIPING, CONDUITS, EQUIPMENT OR STRUCTURES. ROUTE DUCTBANKS BELOW WATER LINES.
3. FIELD VERIFY EXACT LOCATION OF ALL UNDERGROUND PIPES, CONDUITS, AND STRUCTURES BEFORE DIGGING. REPAIR ANY DAMAGE DONE TO ORIGINAL CONDITION.
4. PROVIDE 48" MINIMUM WORKSPACE IN FRONT OF ELECTRICAL EQUIPMENT.
5. DO NOT CUT PAVEMENTS. PUSH PIPE SLEEVE UNDERNEATH AT MINIMUM 24" BELOW SURFACE. SLEEVE INSIDE DIAMETER TO BE 1.5 TIMES OUTER DIAMETER OF CONDUIT.
6. ROUTE SIGNAL CONDUCTORS INTO EXISTING PLC CABINET FOR CONNECTING BY CITY OF HOUSTON.

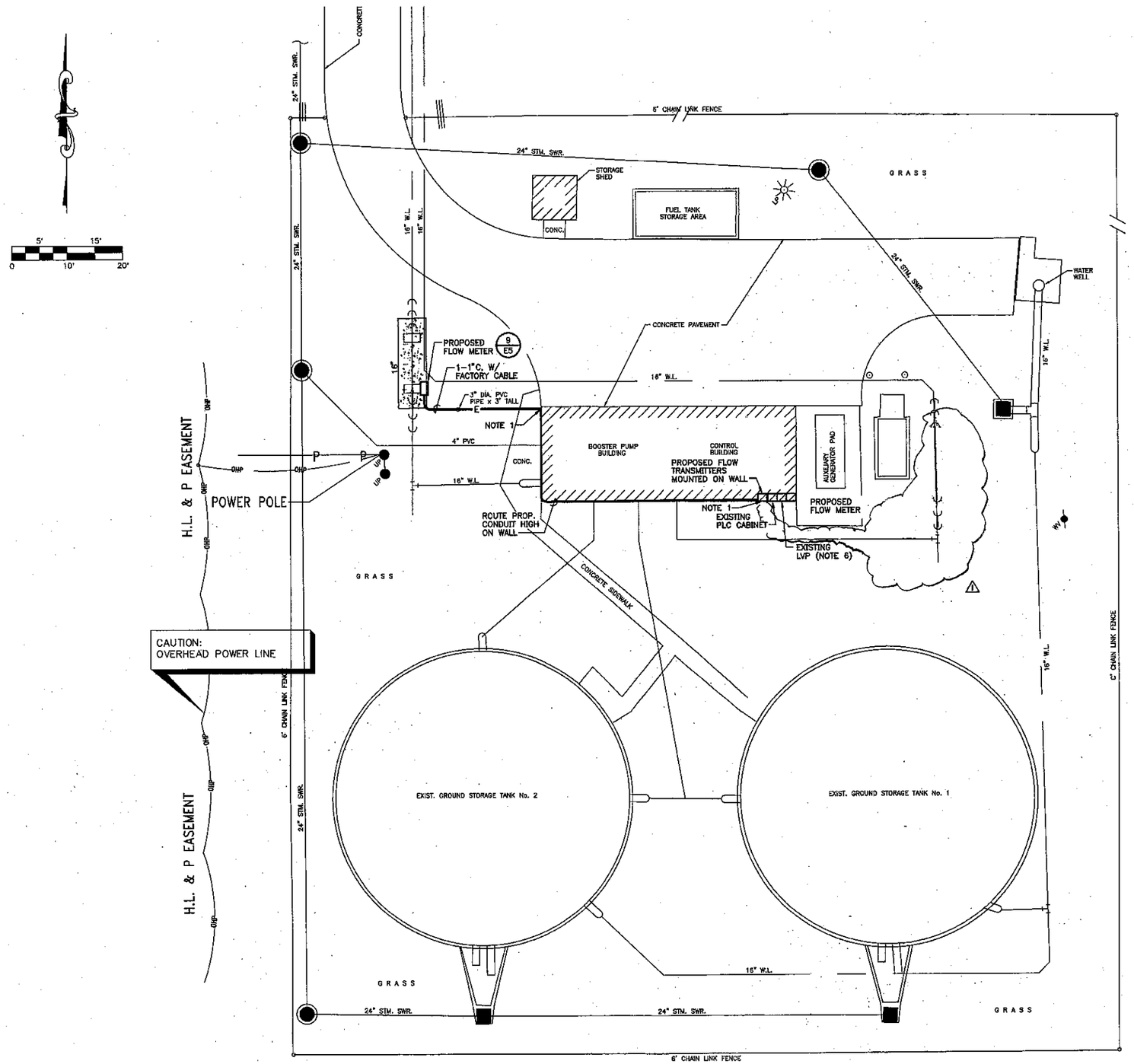

DAYCARE CENTER

ELECTRICAL SITE PLAN

SCALE: 1"=10'-0"

WEST HOUSTON No. 3
14925 S. RICHMOND
KEY MAP #487Z

AS BUILT

REV NO	DESCRIPTION	APP'D	DATE
1	AS BUILT		7/31/07

SHRADER ENGINEERING COMPANY
Electrical/Mechanical Engineers

10497 Town & Country Way, Suite 400 Houston, TX 77024-1118
Tel: 713.467.9961 Fax: 713.465.6022 www.shrader.net

These drawings may not be copied or reproduced for purposes other than this project unless authorized in writing by Shrader Engineering Company. ©2005

ENGINEER:	DESIGNER:	CHECKED BY:	DATE CHECK:	DRAWN BY:
CWS	CWS	CWS	12-14-05	VAR

PTI INCORPORATED
ENGINEERS, ARCHITECTS, PLANNERS
2925 BRIARPARK DRIVE, SUITE 950
HOUSTON, TEXAS 77042
PHONE: (713) 266-6140

DESIGN ENGINEER NAME
CHAL W. SHRADER

ADDRESS:
TEL. No.: 713-467-9961

SURVEYED BY: UNITED
FB No. P5092

SEAL: STATE OF TEXAS — CHAL SHRADER — 40269 — REGISTERED PROFESSIONAL ENGINEER

CITY OF HOUSTON

DEPARTMENT OF PUBLIC WORKS AND ENGINEERING

FLOW METERS FOR VARIOUS FACILITIES
GFS No. S-0936-08-3, FILE No. WA-10813

WEST HOUSTON No. 3 WATER PLANT

ELECTRICAL SITE PLAN

FILE NO. WA-10813	
GFS NO. S-0936-08-3	
DRAWING SCALE	
AS NOTED	
CITY OF HOUSTON PM	
RAJINDER SINGH, P.E.	
SHEET NO. 16 OF 17	

PUBLIC WORKS — 41248 — HOUSTON

E4

CAD FILENAME:

PTI-2958

NOTES:
1. ROUTE 1 1/2" PVC LINE 12-24 INCHES BELOW GRADE AND ENTER DRAIN BOX ON SIDEWALL. SEAL PENETRATION WITH WATER PROOF GROUT. EXTEND 1-2 INCH INSIDE DRAIN BOX AND ELBOW DOWN.
2. LEAVE MINIMUM 24" SLACK CABLES IN J-BOX.

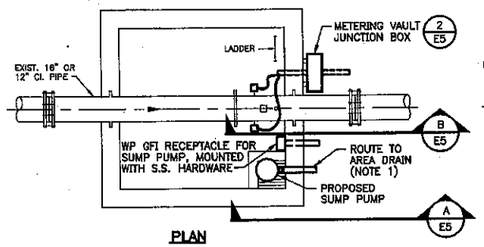

PLAN

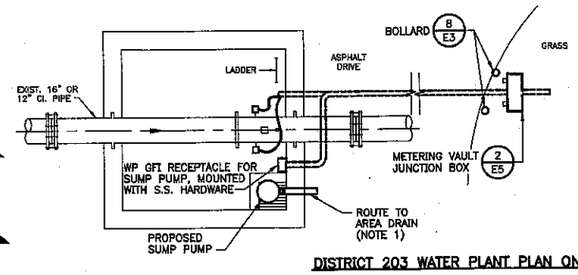

DISTRICT 203 WATER PLANT PLAN ONLY

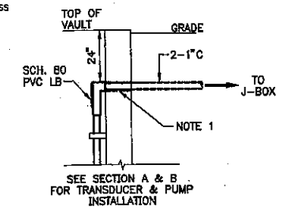

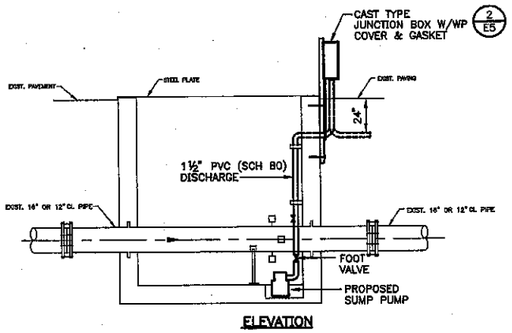

ELEVATION

METERING VAULT 1 E1,E3
NTS

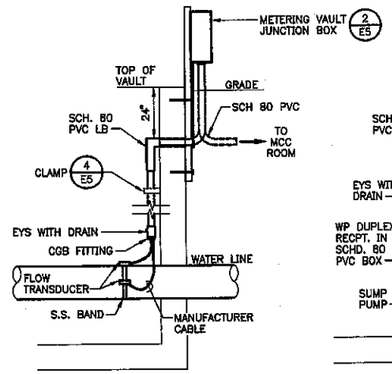

SECTION A E5
NTS

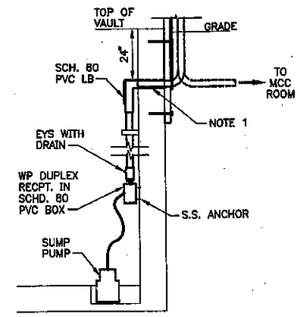

SECTION B E5
NTS

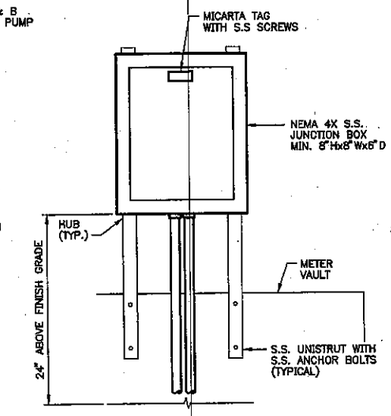

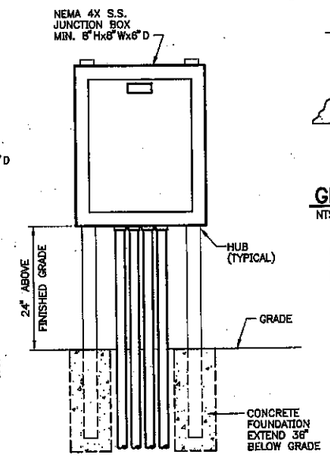

DISTRICT 203 WATER PLANT ONLY

METERING VAULT JUNCTION BOX DETAIL 2 E1,E3,E5
NTS (NOTE 2)

NOTE: INSTALL TOP FLUSH WITH FINISH GRADE IN PAVED AREAS. INSTALL TOP 2" ABOVE FINISHED UNPAVED AREAS WHERE NO FUTURE PAVING IS TO BE PLANNED. SEE CIVIL PLANS FOR FINISHED ELEVATIONS, WHERE APPLICABLE.

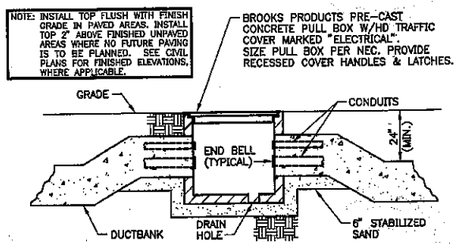

GRADE PULL BOX INSTALLATION 3 E1,E2
NTS

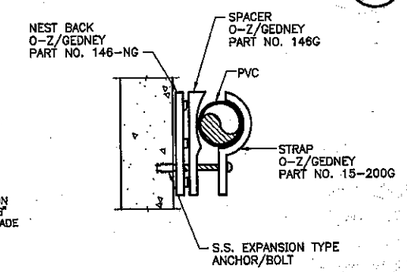

CONDUIT SUPPORT DETAIL 4 E5
NTS

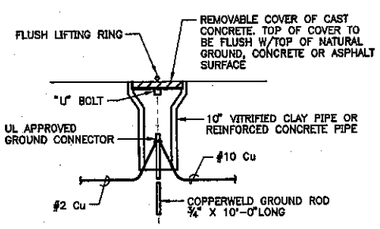

GROUND WELL DETAIL 5 -
NTS (TYPICAL)

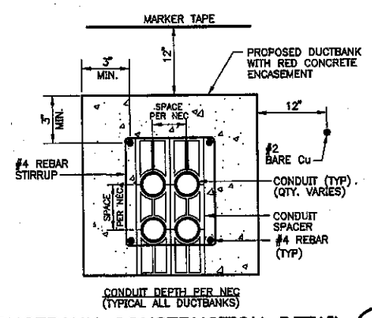

DUCTBANK CONSTRUCTION DETAIL 6 E1,E2,E3,E4
NTS

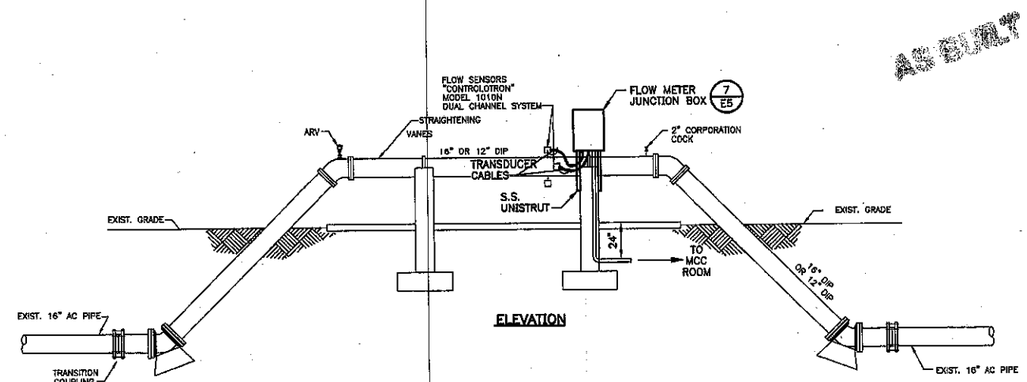

ELEVATION

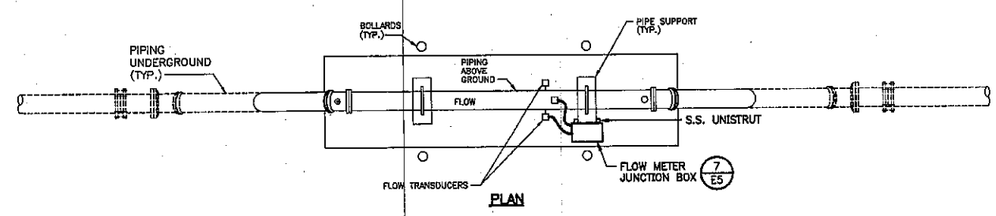

PLAN

ABOVE GROUND FLOW METER DETAIL 9 E2,E3,E4
NTS

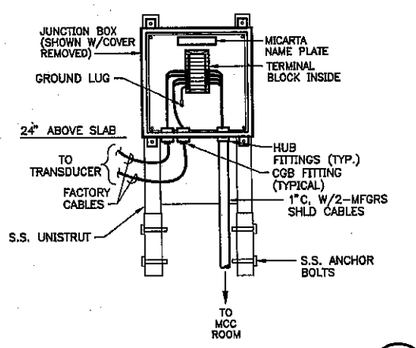

FLOW METER JUNCTION BOX DETAIL 7 E5
NTS

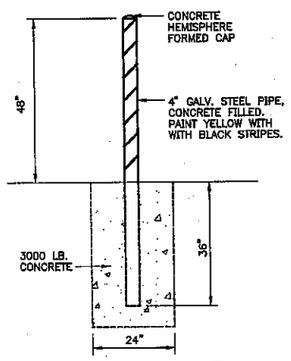

BOLLARD DETAIL 8 E3,E5
NTS

AS BUILT

REV NO	DESCRIPTION	APP'D	DATE

SHRADER ENGINEERING COMPANY
Electrical/Mechanical Engineers
10497 Town & Country Way, Suite 420 Houston, TX 77024-1115
Tel: 713.467.9961 Fax: 713.468.5623 www.shradar.net
These drawings not to be copied or reproduced for purposes other than this project unless authorized in writing by Shrader Engineering Company. ©2006

ENGINEER: CNS	DESIGNER: TJWS	CHECKED BY: TJWS	DATE CHKD: 12-1-97	DRAWN BY: TAA

PTI INCORPORATED
ENGINEERS, ARCHITECTS, PLANNERS
2925 BRIARPARK DRIVE, SUITE 950
HOUSTON, TEXAS 77042
PHONE: (713) 266-6145

DESIGN ENGINEER NAME
CHAL W. SHRADER
ADDRESS:
TEL. No.: 713-467-9961

SURVEYED BY: UNITED
FB No. P5092

SEAL: STATE OF TEXAS — CHAL SHRADER — 40269 — REGISTERED PROFESSIONAL ENGINEER

CITY OF HOUSTON
DEPARTMENT OF PUBLIC WORKS AND ENGINEERING

FLOW METERS FOR VARIOUS FACILITIES
GFS No. S-0936-08-3, FILE No. WA-10813

ELECTRICAL DETAILS

FILE NO. WA-10813	
GFS NO. S-0936-08-3	
DRAWING SCALE	
AS NOTED	
CITY OF HOUSTON PM	
RAJINDER SINGH, P.E.	
SHEET NO. 17 OF 17	

PUBLIC WORKS AND ENGINEERING — ACCEPTED AND FILED — 4-12-98 — CITY DRAWING NUMBER — HOUSTON, TEXAS

E5

CAD FILENAME:

PTI-2958