ENGINEERING CORP.

GEOTECHNICAL INVESTIGATION

CITY OF HOUSTON
MONTROSE AREA AND MIDTOWN
DRAINAGE AND PAVEMENT SUB-PROJECT II
COH WBS NO. M-000290-0002-3
HOUSTON, TEXAS

Reported to:
HR Green, Inc.
Houston, Texas

by

Aviles Engineering Corporation
5790 Windfern
Houston, Texas 77041
713-895-7645

REPORT NO. G166-12

July 2013

AVILES ENGINEERING CORP.

TABLE OF CONTENTS

EXECUTIVE SUMMARY i
1.0 INTRODUCTION 1
1.1 General 1
1.2 Authorization 1
1.3 Purpose and Scope 1
2.0 SUBSURFACE EXPLORATION 2
2.1 Soil Borings 2
3.0 LABORATORY TESTING PROGRAM 3
4.0 SITE CONDITIONS 4
4.1 Subsurface Conditions 4
4.2 Hazardous Materials 6
4.3 Subsurface Variations 6
5.0 GEOTECHNICAL ENGINEERING RECOMMENDATIONS 7
5.1 Geotechnical Parameters for Underground Utilities 7
5.2 Installation of Storm Sewers by Open-Cut Method 7
5.2.1 Loadings on Pipes 8
5.2.2 Trench Stability 9
5.2.3 Bedding and Backfill 13
5.3 Tunneling and Its Influence on Adjacent Structures 13
5.3.1 Tunnel Access Shafts 14
5.3.2 Tunnel Face Stability during Construction 15
5.3.2.1 General 15
5.3.2.2 Anticipated Ground Behavior 16
5.3.2.3 Influence of Tunneling on Existing Structures 17
5.3.3 Measures to Reduce Distress from Tunneling 18
5.3.4 Monitoring Existing Structures 19
5.4 Manholes and Junction Boxes 19
5.4.1 Allowable Bearing Capacity 20
5.4.2 Uplift Resistance 20
5.4.3 Lateral Earth Pressures 20
5.4.4 Manhole Backfill Material 21
5.5 Pavement Reconstruction 21
5.5.1 Rigid Pavement 22
5.5.2 Reinforcing Steel 23
5.5.3 Pavement Subgrade Preparation 23
5.6 Select Fill 24
6.0 CONSTRUCTION CONSIDERATIONS 25
6.1 Site Preparation 25
6.2 Groundwater Control 25
6.3 Construction Monitoring 27
6.4 Monitoring of Existing Structures 28
7.0 LIMITATIONS 28
8.0 CLOSING REMARKS 29

AVILES ENGINEERING CORP.

APPENDICES

APPENDIX A

Plate A-1	Vicinity Map
Plate A-2	Boring Location Plan
Plates A-3 thru A-7	Boring Logs
Plate A-8	Key to Symbols
Plate A-9	Classification of Soils for Engineering Purposes
Plate A-10	Terms Used on Boring Logs
Plate A-11	ASTM & TXDOT Designation for Soil Laboratory Tests
Plate A-12	Sieve Analysis Results

APPENDIX B

Plate B-1	Generalized Soil Profile
Plate B-2	Piezometer Installation Details

APPENDIX C

Plates C-1a and C-1b	Recommended Geotechnical Design Parameters
Plate C-2	Load Coefficients for Pipe Loading
Plate C-3	Live Loads on Pipe Crossing Under Roadway

APPENDIX D

Plate D-1	Critical Heights of Cuts in Nonfissured Clays
Plate D-2	Maximum Allowable Slopes
Plate D-3	A Combination of Bracing and Open Cuts
Plate D-4	Lateral Pressure Diagrams for Open Cuts in Cohesive Soil-Long Term Conditions
Plate D-5	Lateral Pressure Diagrams for Open Cuts in Cohesive Soil-Short Term Conditions
Plate D-6	Lateral Pressure Diagrams for Open Cuts in Sand
Plate D-7	Bottom Stability for Braced Excavation in Clay
Plate D-8	Tunnel Behavior and TBM Selection
Plate D-9	Relation between the Width of Surface Depression and Depth of Cavity for Tunnels
Plate D-10	Methods of Controlling Ground Water in Tunnel and Grouting Material Selection
Plate D-11	Buoyant Uplift Resistance for Buried Structures

ENGINEERING CORP.

EXECUTIVE SUMMARY

The report submitted herein presents the results of Aviles Engineering Corporation's (AEC) geotechnical investigation for the City of Houston's (COH) proposed Montrose Area and Midtown Drainage and Pavement Improvements - Design Package A, in Houston, Texas (Houston Key Map 493K). A vicinity map is presented on Plate A-1, in Appendix A. According to HR Green, the project alignment starts at the intersection of West Dallas Street and Genesee Street, proceeds east along West Dallas Street to the intersection of Gillette Street, proceeds north along Gillette Street, crosses underneath Allen Parkway, and then outfalls into Buffalo Bayou [Harris County Flood Control District Channel W100-00-00) to the north. The proposed improvements include: (i) installation of 10 foot by 10 foot box culvert storm sewer by open cut method; (ii) installation of 120 inch diameter RCP storm sewer by tunnel method where the alignment crosses Allen Parkway; (iii) installation of storm sewer junction boxes; and (iv) reconstruction of existing roadway pavement. Based on preliminary information provided by HR Green, the invert depths of the storm sewers are 14 feet at the Buffalo Bayou outfall, 23 feet at Allen Parkway and along Gillette Street, and 27 feet along West Dallas Street.

1. Subsurface Soil Conditions: A generalized subsurface profile along the storm sewer alignment is presented on Plate B-1, in Appendix B.

   Buffalo Bayou Outfall: Based on Boring G146-11 B-1, the subsurface conditions at the Buffalo Bayou Outfall generally consists of approximately 4 feet of silty clayey sand (SC-SM) fill at the ground surface, underlain by approximately 24 feet of very loose to medium dense silty sand (SM/SP-SM), followed by approximately 2 feet of firm sandy lean clay (CL), then approximately 11 feet of very dense silty sand (SM), underlain by approximately 24 feet of stiff to hard fat clay (CH) to the boring termination depth of 65 feet below existing grade.

   Gillette Street at Allen Parkway: Based on Boring B-1, the subsurface conditions along Gillette Street at the intersection of Allen Parkway generally consist of approximately 4 feet of hard sandy lean clay (CL) fill at the ground surface, underlain by approximately 6.5 feet of loose to medium dense silty sand (SM), followed by approximately 3.5 feet of very stiff to hard silty clay (CL-ML), then approximately 15.5 feet of medium dense to very dense silt/clayey sand (ML/SC), underlain by approximately 13.5 feet of stiff to hard fat clay (CH), followed by approximately 6 feet of very soft to soft lean clay (CL), then approximately 3 feet of hard fat clay to the boring termination depth of 50 feet below existing grade.

   Gillette Street between West Dallas Street and Allen Parkway: Based on Borings B-2 and B-3, the subsurface conditions along Gillette Street between West Dallas Street and Allen Parkway generally consists of approximately 10 feet of stiff to hard lean clay/clayey sand (CL/SC) at the ground surface, underlain by approximately 6 to 11 feet of silty sand/sandy clay with silt (SM/CL), followed by approximately 19 feet of firm to hard lean/fat clay (CL/CH) to the boring termination depth of 35 to 40 feet below existing grade. An approximately 3 foot thick strata of dense silty sand (SM) was encountered at a depth of 34 feet in Boring B-2.

   West Dallas Street between Gillette Street and Genesee Street: Based on Boring B-4, the subsurface conditions along West Dallas Street between Gillette Street and Genesee Street generally consist of approximately 6 feet of stiff to very stiff fat/lean clay (CH/CL) fill at the ground surface, underlain by approximately 6 feet of stiff to hard lean clay (CL), followed by approximately 4 feet of clayey sand (SC), then approximately 24 feet of stiff to hard fat/lean clay (CH/CL) to the boring termination depth of 40 feet below existing grade.

EXECUTIVE SUMMARY (cont.)

2. Subsurface Soil Properties: The subsurface clayey soils have low to very high plasticity, with liquid limits (LL) ranging from 20 to 69, and plasticity indices (PI) ranging from 7 to 45. The cohesive soils encountered are classified as "CL-ML", "CL", and "CH" type soils and granular soils were classified as "SM", "SC", and "ML" in accordance with ASTM D 2487.

3. Groundwater Conditions: For the purposes of this investigation, AEC has conservatively assumed that the site groundwater levels are equal to the boring cave-in depths. Groundwater was encountered at a depth of 10 to 33 feet below grade during drilling and was subsequently observed at a depth of 10 to 32.6 feet approximately 15 minutes after the initial encounter. Groundwater along the alignment may be slightly pressurized. After completion of drilling, Boring B-1 was converted to piezometers. A detailed description of ground water readings is presented on Table 2 in Section 4.1 of this report.

4. Hazardous Materials: No signs of visual staining or odors were encountered during field drilling or during processing of the soil samples in the laboratory.

5. Design parameters and recommendations for installation of storm sewers by open cut and tunnel methods are presented in Sections 5.1 through 5.3 of this report, respectively.

6. Design parameters and recommendations for installation of manholes and junction boxes by open cut method are presented in Section 5.4 of this report.

7. Design parameters and recommendations for concrete pavement reconstruction are presented in Section 5.5 of this report.

This Executive Summary is intended as a summary of the investigation and should not be used without the full text of this report.

ENGINEERING CORP.

GEOTECHNICAL INVESTIGATION

CITY OF HOUSTON
MONTROSE AREA AND MIDTOWN
DRAINAGE AND PAVEMENT SUB-PROJECT II
COH WBS NO. M-000290-0002-3
HOUSTON, TEXAS

1.0 INTRODUCTION

1.1 General

The report submitted herein presents the results of Aviles Engineering Corporation's (AEC) geotechnical investigation for the City of Houston's (COH) proposed Montrose Area and Midtown Drainage and Pavement Improvements - Design Package A, in Houston, Texas (Houston Key Map 493K). A vicinity map is presented on Plate A-1, in Appendix A. According to HR Green, the project alignment starts at the intersection of West Dallas Street and Genesee Street, proceeds east along West Dallas Street to the intersection of Gillette Street, proceeds north along Gillette Street, crosses underneath Allen Parkway, and then outfalls into Buffalo Bayou [Harris County Flood Control District Channel W100-00-00) to the north. The proposed improvements include: (i) installation of 10 foot by 10 foot box culvert storm sewer by open cut method; (ii) installation of 120 inch diameter RCP storm sewer by tunnel method where the alignment crosses Allen Parkway; (iii) installation of storm sewer junction boxes; and (iv) reconstruction of existing roadway pavement. Based on preliminary information provided by HR Green, the invert depths of the storm sewers are 14 feet at the Buffalo Bayou outfall, 23 feet at Allen Parkway and along Gillette Street, and 27 feet along West Dallas Street.

1.2 Authorization

Notice to proceed for the geotechnical investigation was provided via email on December 4, 2012 by Mr. Stephen Sparks, P.E., of HR Green, based on AECs proposal G2012-06-08R3, dated October 26, 2012.

1.3 Purpose and Scope

The purpose of this geotechnical investigation is to evaluate the subsurface soil conditions along the alignment and develop geotechnical engineering recommendations for design and construction of storm

sewers by open cut and tunnel methods, as well as street reconstruction (where storm sewer trenches will be located beneath existing pavement), including pavement thickness and subgrade preparation. The scope of this geotechnical investigation is summarized below:

1. Drilling and sampling four geotechnical borings, ranging from 35 to 50 feet below existing grade;
2. Soil laboratory testing on selected soil samples;
3. Engineering analyses and recommendations for the installation of storm sewers by open cut method, including loadings on pipes, bedding, lateral earth pressure parameters, trench stability, and backfill requirements;
4. Engineering analyses and recommendations for the installation of storm sewers by tunnel method, including tunnel access shafts, reaction walls, and tunnel stability;
5. Engineering analyses and recommendations for the design of rigid pavement, including pavement thickness and subgrade preparation;
6. Construction recommendations for installation of storm sewers by open cut and tunnel methods, as well as rigid pavements.

2.0 SUBSURFACE EXPLORATION

2.1 Soil Borings

The boring layout and depths were selected by AEC in general accordance with Chapter 11 of the 2011 COH Infrastructure Design Manual, based on preliminary information provided by HR Green on August 27, 2012. The subsurface exploration consisted of drilling and sampling a total of 4 soil borings ranging from 35 to 50 feet below existing grade. AEC has also included a previous boring (G146-11, B-11) that AEC performed for Buffalo Bayou Park that is near the proposed outfall location. The boring locations are shown on the Boring Location Plan on Plate A-2, in Appendix A. Total drilling footage is 160 feet. Boring survey data was provided to AEC and is included on the boring logs. The boring designations and depths and corresponding storm sewer invert depths are presented in Table 1 below.

Table 1. Boring Number, Station, and Depth

Boring No.	Boring Depth (ft)	Station No.	Invert Depth near Boring (ft)	Piezometer Depth (ft)
G146-11, B-11	65	22+00[(a)]	15	--
B-1 (PZ-1)	50	16+00	23	30
B-2	40	10+68	23	--
B-3	35	6+35	23	--

Boring No.	Boring Depth (ft)	Station No.	Invert Depth near Boring (ft)	Piezometer Depth (ft)
B-4	40	4+56	27	--

Note: (a) Approximate boring location.

Existing pavement at Borings B-2 through B-4 was first cut with a core barrel prior to field drilling. The field drilling was performed with a truck-mounted drilling rig primarily using dry auger method, and then using wet rotary method once water-bearing granular soils were encountered or the borings began to cave in. Undisturbed samples of cohesive soils were obtained from the borings by pushing 3-inch diameter thin-wall, seamless steel Shelby tube samplers in general accordance with ASTM D 1587. Granular soils were sampled with a 2-inch split-barrel sampler in accordance with ASTM D 1586. Standard Penetration Test resistance (N) values were recorded for the granular soils as "Blows per Foot" and are shown on the boring logs. Strength of the cohesive soils was estimated in the field using a hand penetrometer. The undisturbed samples of cohesive soils were extruded mechanically from the core barrels in the field and wrapped in aluminum foil; all samples were sealed in plastic bags to reduce moisture loss and disturbance. The samples were then placed in core boxes and transported to the AEC laboratory for testing and further study. Boring B-1 was converted to a piezometer upon completion of drilling. Borings B-2 through B-4 were grouted with cement-bentonite upon completion of drilling and the existing pavement was patched with asphalt.

3.0 LABORATORY TESTING PROGRAM

Soil laboratory testing was performed by AEC personnel. Samples from the borings were examined and classified in the laboratory by a technician under the supervision of a geotechnical engineer. Laboratory tests were performed on selected soil samples in order to evaluate the engineering properties of the foundation soils in accordance with applicable ASTM Standards. Atterberg limits, moisture contents, percent passing a No. 200 sieve, sieve analysis, and dry unit weight tests were performed on typical samples to establish the index properties and confirm field classification of the subsurface soils. Strength properties of cohesive soils were determined by means of torvane (TV), unconfined compression (UC), and undrained-unconsolidated (UU) triaxial tests performed on undisturbed samples. The test results are presented on the boring logs. Details of the soils encountered in the borings (including G146-11 B-11) are presented on Plates A-3 through A-7, in Appendix A. A key to the boring logs, classification of soils for engineering purposes, terms used on boring logs, and reference ASTM Standards for laboratory testing are

presented on Plates A-8 through A-11, in Appendix A. Sieve analysis results are presented on Plate A-12, in Appendix A.

4.0 SITE CONDITIONS

Based on our site visits, West Dallas Street from Genesee Street to Gillette Street is a 4 lane concrete roadway. Gillette Street from West Dallas Street to Allen Parkway is a 2 lane asphalt roadway. AEC notes that the Houston Branch of the Dallas Federal Reserve Bank is at the southwest intersection of Gillette Street and Allen Parkway. After crossing Allen Parkway, the ground surface along the project alignment quickly slopes downwards towards Buffalo Bayou.

4.1 Subsurface Conditions

A generalized subsurface profile along the storm sewer alignment is presented on Plate B-1, in Appendix B. Soil strata encountered in our borings are summarized below:

Boring	Depth (ft)	Description of Stratum
(G146-11)	0 - 4	Fill: Silty Clayey Sand (SC-SM)
B-11	4 - 16	Very loose to medium dense, Silty Sand (SM)
	16 - 18	Medium dense, Poorly Graded Sand (SP-SM)
	18 - 28	Loose to medium dense, Silty Sand (SM)
	28 - 30	Firm, Sandy Lean Clay (CL)
	30 - 41	Very dense, Silty Sand (SM)
	41 - 65	Stiff to hard, Fat Clay (CH), with slickensides
B-1	0 - 4	Fill: hard, Sandy Lean Clay (CL)
	4 - 10.5	Loose to medium dense, Silty Sand (SM)
	10.5 - 14	Very stiff to hard, Silty Clay w/Sand (CL-ML)
	14 - 28	Dense to very dense, Silt (ML), with clayey sand seams
	28 - 29.5	Medium dense, Clayey Sand (SC), with lean clay seams
	29.5 - 41	Stiff to hard, Fat Clay (CH)
	41 - 47	Very soft to soft, Lean Clay (CL), with abundant silt seams
	47 - 50	Hard, Fat Clay (CH), with slickensides
B-2	0 - 0.13	Pavement: 1.5” asphalt
	0.13 - 0.8	Base: 8” crushed limestone
	0.8 - 2	Fill: gravel and shell, with sandy clay
	2 - 6	Very stiff, Lean Clay w/Sand (CL)
	6 - 10	Clayey Sand (SC)
	10 - 23	Medium dense to very dense, Silty Sand (SM)
	23 - 28	Very stiff to hard, Fat Clay (CH), with slickensides

Boring	Depth (ft)	Description of Stratum
B-2 (cont.)	28 - 34	Firm, Lean Clay (CL), with abundant silt seams
	34 - 37	Dense, Silty Sand (SM)
	37 - 40	Very stiff, Fat Clay (CH), with silt layers
B-3	0 - 0.13	Pavement: 1.5" asphalt
	0.13 - 0.9	Base: 9.5" crushed limestone
	0.9 - 4	Stiff to very stiff, Fat Clay (CH)
	4 - 10	Stiff to hard, Lean Clay w/Sand (CL)
	10 - 16	Very stiff, Sandy Lean Clay (CL), with abundant silt seams
	16 - 35	Stiff to hard, Fat Clay (CH), with slickensides
B-4	0 - 0.8	Pavement: 9" concrete
	0.8 - 1.1	Base: 4" stabilized sand, with gravel
	1.1 - 4	Fill: stiff to very stiff, Fat Clay (CH)
	4 - 6	Fill: very stiff, Sandy Lean Clay (CL), with siltstone fragments
	6 - 12	Stiff to hard, Lean Clay w/Sand (CL), with siltstone fragments
	12 - 16	Clayey Sand (SC)
	16 - 18	Stiff to very stiff, Fat Clay (CH)
	18 - 21	Hard, Lean Clay (CL)
	21 - 40	Very stiff to hard, Fat Clay (CH), with slickensides

Subsurface Soil Properties: The subsurface clayey soils have low to very high plasticity, with liquid limits (LL) ranging from 20 to 69, and plasticity indices (PI) ranging from 7 to 45. The cohesive soils encountered are classified as "CL-ML", "CL", and "CH" type soils and granular soils were classified as "SM", "SC", and "ML" in accordance with ASTM D 2487. High plasticity clays can undergo significant volume changes due to seasonal changes in moisture contents. "CH" soils undergo significant volume changes due to seasonal changes in soil moisture contents. "CL" type soils with lower LL (less than 40) and PI (less than 20) generally do not undergo significant volume changes with changes in moisture content. However, "CL" soils with LL approaching 50 and PI greater than 20 essentially behave as "CH" soils and could undergo significant volume changes. Slickensides were encountered in the fat clays.

Groundwater Conditions: For the purposes of this investigation, AEC has conservatively assumed that the site groundwater levels are equal to the boring cave-in depths. Groundwater was encountered at a depth of 10 to 33 feet below grade during drilling and was subsequently observed at a depth of 10 to 32.6 feet approximately 15 minutes after the initial encounter. Groundwater along the alignment may be slightly pressurized. After completion of drilling, Boring B-1 was converted to a piezometer. Piezometer installation details are presented on Plate B-2, in Appendix B. Detailed groundwater levels are summarized in Table 2.

Table 2. Groundwater Depths below Existing Ground Surface

Boring No.	Date Drilled	Boring Depth (ft)	Groundwater Depth Encountered during Drilling (ft)	Groundwater Depth 15 min. After Initial Encounter (ft)	Groundwater Depth in Piezometer (ft)
G146-11 B-11	6/20/11	65	18	17.6	--
B-1 (PZ-1)	1/17/13	50	10[(a)]	10[(a)]	
B-2	1/16/13	40	23.5[(a)]	23.5[(a)]	--
B-3	1/16/13	35	33[(a)]	32.6	--
B-4	1/16/13	40	25	24	--

Note: (a) Groundwater level conservatively assumed to be at boring cave in depth.

The information in this report summarizes conditions found on the dates the borings were drilled. It should be noted that our groundwater observations are short-term; groundwater depths and subsurface soil moisture contents will vary with environmental variations such as frequency and magnitude of rainfall and the time of year when construction is in progress.

4.2 Hazardous Materials

No signs of visual staining or odors were encountered during field drilling or during processing of the soil samples in the laboratory.

4.3 Subsurface Variations

It should be emphasized that: (i) at any given time, groundwater depths can vary from location to location, and (ii) at any given location, groundwater depths can change with time. Groundwater depths will vary with seasonal rainfall and other climatic/environmental events. Subsurface conditions may vary away from and in between the boring locations.

Clay soils in the Houston area typically have secondary features such as slickensides and contain sand/silt seams/lenses/layers/pockets. It should be noted that the information in the boring logs is based on 3-inch diameter soil samples which were generally obtained continuously at intervals of 2 from the ground surface

to a depth of 20 feet in the borings, then at intervals of 5 feet thereafter to the boring termination depths of 35 to 50 feet. A detailed description of the soil secondary features may not have been obtained due to the small sample size and sampling interval between the samples. Therefore, while a boring log shows some soil secondary features, it should not be assumed that the features are absent where not indicated on the boring logs.

5.0 GEOTECHNICAL ENGINEERING RECOMMENDATIONS

According to HR Green, the proposed improvements include: (i) installation of 10 foot by 10 foot box culvert storm sewer by open cut method; (ii) installation of 120 inch diameter RCP storm sewer by tunnel method where the alignment crosses Allen Parkway; (iii) installation of storm sewer junction boxes; and (iv) reconstruction of existing roadway pavement. Based on information provided by HR Green, the invert depths of the storm sewers are 14 feet at the Buffalo Bayou outfall, 23 feet at Allen Parkway and along Gillette Street, and 27 feet along West Dallas Street.

Plan and profile drawings were not available to AEC at the time this report was prepared. AEC recommends that plan and profile drawings be provided so that our engineering recommendations presented within this report can be updated or revised as necessary.

5.1 Geotechnical Parameters for Underground Utilities

Recommended geotechnical parameters for the subsurface soils along the alignment to be used for design of storm sewers are presented on Plates C-1a and C-1b, in Appendix C. The design values are based on the results of field and laboratory test data on individual boring logs as well as our experience. It should be noted that because of the variable nature of soil stratigraphy, soil types and properties along the alignment or at locations away from a particular boring may vary substantially.

5.2 Installation of Storm Sewers by Open-Cut Method

Storm sewers installed by open-cut methods should be designed and installed in accordance with Section 02317 of the latest City of Houston Standard Construction Specifications (COHSCS).

AYLES ENGINEERING CORP.

5.2.1 Loadings on Pipes

Underground utilities support the weight of the soil and water above the crown, as well as roadway traffic and any structures that exist above the utilities.

Earth Loads: For underground utilities to be installed using open cut methods, the vertical soil load W_e can be calculated as the larger of the two values from Equations (1) and (3):

$$W_e = C_d \gamma B_d^2 \quad \text{.....Equation (1)}$$

$$C_d = [1 - e^{-2K\mu'(H/B_d)}]/(2K\mu') \quad \text{.....Equation (2)}$$

$$W_e = \gamma B_c H \quad \text{.....Equation (3)}$$

where:
- W_e = trench fill load, in pounds per linear foot (lb/ft);
- C_d = trench load coefficient, see Plate C-2, in Appendix C;
- γ = effective unit weight of soil over the conduit, in pounds per cubic foot (pcf);
- B_d = trench width at top of the conduit < 1.5 B_c (ft);
- B_c = outside diameter of the conduit (ft);
- H = variable height of fill (ft); when the height of fill above the top of the conduit H_c >2 B_d, $H = H_h$ (height of fill above the middle of the conduit). When H_c < 2 B_d, H varies over the height of the conduit; and
- $K\mu'$ = 0.1650 maximum for sand and gravel, 0.1500 maximum for saturated top soil, 0.1300 maximum for ordinary clay, 0.1100 maximum for saturated clay.

When underground conduits are located below groundwater, the total vertical dead loads should include the weight of the projected volume of water above the conduits.

Traffic Loads: The vertical stress on top of an underground conduit, p_L (psf), resulting from traffic loads (from a H-20 or HS-20 truck) can be obtained from Plate C-3, in Appendix C. The live load on top of the underground conduit can be calculated from Equation (4):

$$W_L = p_L B_c \quad \text{.....Equation (4)}$$

where:
- W_L = live load on the top of the conduit (lb/ft);
- p_L = vertical stress (on the top of the conduit) resulting from traffic loads (psf);
- B_c = outside diameter of the conduit, (ft);

Lateral Loads: The lateral soil pressure p_l can be calculated from Equation (5); hydrostatic pressure should be added, if applicable.

$$p_l = 0.5\,(\gamma H_h + p_s) \qquad \text{.....Equation (5)}$$

where: H_h = height of fill above the center of the conduit (ft);
γ = effective unit weight of soil over the conduit (pcf);
p_s = vertical pressure on conduit resulting from traffic and/or construction equipment (psf).

5.2.2 Trench Stability

Cohesive soils in the Houston area contain many secondary features which affect trench stability, including sand seams and slickensides. Slickensides are shiny weak failure planes which are commonly present in fat clays; such clays often fail along these weak planes when they are not laterally supported, such as in an open excavation. The Contractor should not assume that slickensides and sand seams/layers/pockets are absent where not indicated on the logs.

The Contractor should be responsible for designing, constructing and maintaining safe excavations. The excavations should not cause any distress to existing structures.

Trenches 20 feet and Deeper: **OSHA requires that shoring or bracing for trenches 20 feet and deeper be specifically designed by a licensed professional engineer.**

Trenches Less than 20 Feet Deep: Trench excavations that are less than 20 feet deep may be shored, sheeted and braced, or laid back to a stable slope for the safety of workers, the general public, and adjacent structures, except for excavations which are less than 5 feet deep and verified by a competent person to have no cave-in potential. The excavation and trenching should be in accordance with Occupational Safety and Health Administration (OSHA), Safety and Health Regulations, 29 CFR, Part 1926. Recommended OSHA soil types for trench design for existing soils can be found on Plates C-1a and C-1b, in Appendix C. Fill soils are considered OSHA Class 'C'; submerged cohesive soils should also be considered OSHA Class 'C', unless they are dewatered first.

Critical Height is defined as the height a slope will stand unsupported for a short time; in cohesive soils, it is used to estimate the maximum depth of open-cuts at given side slopes. Critical Height may be calculated based on the soil cohesion. Values for various slopes and cohesion are shown on Plate D-1, in Appendix D.

Cautions listed below should be exercised in use of Critical Height applications:

1. No more than 50 percent of the Critical Height computed should be used for vertical slopes. Unsupported vertical slopes are not recommended where granular soils or soils that will slough when not laterally supported are encountered within the excavation depth.

2. If the soil at the surface is dry to the point where tension cracks occur, any water in the crack will increase the lateral pressure considerably. In addition, if tension cracks occur, no cohesion should be assumed for the soils within the depth of the crack. The depth of the first waler should not exceed the depth of the potential tension crack. Struts should be installed before lateral displacement occurs.

3. Shoring should be provided for excavations where limited space precludes adequate side slopes, e.g., where granular soils will not stand on stable slopes and/or for deep open cuts.

4. All excavation, trenching and shoring should be designed and constructed by qualified professionals in accordance with OSHA requirements.

The maximum (steepest) allowable slopes for OSHA Soil Types for excavations less than 20 feet are presented on Plate D-2, in Appendix D.

If limited space is available for the required open trench side slopes, the space required for the slope can be reduced by using a combination of bracing and open cut as illustrated on Plate D-3, in Appendix D. Guidelines for bracing and calculating bracing stress are presented below.

<u>Computation of Bracing Pressures:</u> The following method can be used for calculating earth pressure against bracing for open cuts. Lateral pressure resulting from construction equipment, traffic loads, or other surcharge should be taken into account by adding the equivalent uniformly distributed surcharge to the design lateral pressure. Hydrostatic pressure, if any, should also be considered. The active earth pressure at depth z can be determined by Equation (6). The design soil parameters for trench bracing design are presented on Plates C-1a and C-1b, in Appendix C.

$$p_a = (q_s + \gamma h_1 + \gamma' h_2) K_a - 2c\sqrt{K_a} + \gamma_w h_2 \qquad \text{.....Equation (6)}$$

where: p_a = active earth pressure (psf);
q_s = uniform surcharge pressure (psf);
γ, γ' = wet unit weight and buoyant unit weight of soil (pcf);
h_1 = depth from ground surface to groundwater table (ft);
h_2 = $z-h_1$, depth from groundwater table to the point under consideration (ft);

z = depth below ground surface for the point under consideration (ft);
K_a = coefficient of active earth pressure;
c = cohesion of clayey soils (psf); c can be omitted conservatively;
γ_w = unit weight of water, 62.4 pcf.

Pressure distribution for the practical design of struts in open cuts for clays and sands are illustrated on Plates D-4 through D-6, in Appendix D.

Bottom Stability: In open-cuts, it is necessary to consider the possibility of the bottom failing by heaving, due to the removal of the weight of excavated soil. Heaving typically occurs in soft plastic clays when the excavation depth is sufficiently deep enough to cause the surrounding soil to displace vertically due to bearing capacity failure of the soil beneath the excavation bottom, with a corresponding upward movement of the soils in the bottom of the excavation. In fat and lean clays, heave normally does not occur unless the ratio of Critical Height to Depth of Cut approaches one. In very sandy and silty lean clays and granular soils, heave can occur if an artificially large head of water is created due to installation of impervious sheeting while bracing the cut. This can be mitigated if groundwater is lowered below the excavation by dewatering the area. Guidelines for evaluating bottom stability in clay soils are presented on Plate D-7, in Appendix D.

If the excavation extends below groundwater, and the soils at or near the bottom of the excavation are mainly sands or silts, the bottom can fail by blow-out (boiling) when a sufficient hydraulic head exists. The potential for boiling or in-flow of granular soils increases where the groundwater is pressurized. To reduce the potential for boiling of excavations terminating in granular soils below pressurized groundwater, the groundwater table should be lowered at least 5 feet below the excavation in accordance with Section 01578 of the latest City of Houston Standard General Requirement (COHSGR).

Calcareous nodules, silt/sand seams, and fat clays with slickensides were encountered in some of the borings. These secondary structures may become sources of localized instability when they are exposed during excavation, especially when they become saturated. Such soils have a tendency to slough or cave in when not laterally confined, such as in trench excavations. The Contractor should be aware of the potential for cave-in of the soils. Low plasticity soils (silts and clayey silts) will lose strength and may behave like granular soils when saturated.

Dewatering: AEC notes that the 23 to 27 feet invert depths provided by HR Green are fairly deep for an open cut trench excavation in a limited space environment. Table 3 presents the depth that granular soils and groundwater was encountered within the trench and/or pipe bedding zone of the borings along the alignment.

Table 3. Groundwater and Granular Soils within Trench Zone

Boring No.	Station No.	Invert Depth near Boring (ft)	Granular Soil Strata Encountered in Trench Zone	Groundwater Level (ft)
G146-11 B-11	22+00[(a)]	15	(4'-15') V. loose to med dense SM	17.6
B-1	16+00	23	(4'-10.5') Loose to med dense SM (10.5'-28') Dense to v. dense ML	10[(b)] 29.1 (PZ-1)
B-2	10+68	23	(6'-10') SC (10'-21') Med dense to v. dense SM	23.5[(b)]
B-3	6+35	23	(10'-16') Very stiff CL, with abundant silt seams	32.6
B-4	4+56	27	(12'-16') SC	24

Note: (a) Approximate boring location.
(b) Groundwater level conservatively assumed to be at boring cave in depth.
(c) SM = silty sand, ML = silt, SC = clayey sand, CL = sandy lean clay.

As indicated on Table 3, granular soils will be encountered within the trench zone of all the borings along the proposed alignment. In addition, groundwater may be encountered within the trench zone near Boring B-1 (although this is possible a perched water table, based on our piezometer reading) and B-4, and within the pipe bedding zone in the vicinity of Borings G146-11 B-11 and B-2. Possible ground water control measures include: (i) deep wells with turbine or submersible pumps; (ii) multi-staged well points; or (iii) water-tight sheet pile cut-off walls. **Note that extended and/or excessive dewatering can result in differential settlement of existing adjacent structures (such as the Federal Reserve Bank facility) as the groundwater table is lowered. Special care should be exercised to prevent a change of the groundwater level below the bank building and structures when performing dewatering operations for the storm sewer installation. One option to reduce such risk includes using a sheet pile cutoff wall to minimize seepage into the excavation, combined with a series of monitoring and reinjection wells (to maintain the ground table) around the construction area.** General groundwater control recommendations are presented in Section 6.2 of this report. The options for dewatering presented here are for reference purposes only; it is the Contractor's responsibility to take the necessary precautions to minimize the effect on existing structures in the vicinity of the dewatering operation.

5.2.3 Bedding and Backfill

Trench excavation, pipe embedment material, and backfill for the proposed storm sewers should be in general accordance with Section 02317 of the latest COHSCS. Backfill should be placed in loose lifts not exceeding 8 inches and compacted to 95 percent of its ASTM D-698 (Standard Proctor) maximum dry density at a moisture content ranging between optimum and 3 percent above optimum.

5.3 Tunneling and Its Influence on Adjacent Structures

The Contractor is responsible for designing, constructing, implementing, and monitoring safe tunneling excavation and protecting existing structures in the vicinity from adverse effects resulting from construction, and retaining professionals who are qualified and experienced to perform the tasks and who are capable of modifying the system, as required. The following discussion provides general guidelines to the Contractor.

Based on information provided by HR Green, a 120 inch diameter RCP storm sewer will be installed by tunneling (bore/auger) method beneath Allen Parkway; the approximate tunnel invert depths and possible subsurface conditions are summarized in Table 4 below. AEC notes that plan and profile drawings of the tunnel were not available at the time this report was prepared. AEC recommends that plan and profile drawings be provided so that our engineering recommendations presented within this report can be updated or revised as necessary.

Table 4. Subsurface Conditions in Borings within Tunnel Zone

Soil Boring	Station	Tunnel Segment	Proposed Pipe Invert Elevation (ft)	Soil Types Encountered in Tunnel Zone	Ground Water Depth below Existing Ground Surface (ft)		
					During Drilling	¼ Hour After First Encounter	In Piezometer
B-1	16+00	Allen Parkway	23	(8'-10.5') Med. dense SM (10.5'-14') V. stiff to hard CL-ML (14'-28') Dense to v. dense ML	10[(a)]	10[(a)]	29.1

Note: (a) Groundwater level conservatively assumed to be at boring cave in depth.

Tunneling operations and placement of pipe inside tunnel constructed with primary liner should comply with Section 02425 of the latest COHSCS.

Loadings on Pipes: Recommendations for computation of loadings on pipes from H-20 or HS-20 trucks are presented in Section 5.2.1 above.

5.3.1 Tunnel Access Shafts

Tunnel access shafts should be constructed in accordance with Section 02400 of the latest COHSCS. Based on Table 4, the tunnel access shafts for the Allen Parkway crossing will encounter granular soils and may encounter groundwater. Since the access shafts will be most likely extend into water-bearing sand/silt, the access shaft walls can be supported by internally-braced, water-tight steel sheet piles. Sheet pile recommendations are presented in Section 6.2 of this report.

AEC anticipates ground water control will be required for the tunnel shafts. Possible ground water control measures include: (i) deep wells with turbine or submersible pumps; (ii) multi-staged well points; or (iii) water-tight sheet pile cut-off walls. **Note that extended and/or excessive dewatering can result in differential settlement of existing adjacent structures (such as the Federal Reserve Bank facility) as the groundwater table is lowered. Special care should be exercised to prevent a change of the groundwater level below the bank building and structures when performing dewatering operations for the storm sewer installation. One option to reduce such risk includes using a sheet pile cutoff wall to minimize seepage into the excavation, combined with a series of monitoring and reinjection wells (to maintain the ground table) around the construction area.** General groundwater control recommendations are presented in Section 6.2 of this report. The options for dewatering presented here are for reference purposes only; it is the Contractor's responsibility to take the necessary precautions to minimize the effect on existing structures in the vicinity of the dewatering operation.

Bottom Stability: Recommendations for evaluating tunnel access shaft bottom stability are presented in Section 5.2.2 of this report.

Reaction Walls: Reaction walls (if used) will be part of the tunnel shaft walls; they will be rigid structures and support tunneling operations by mobilizing passive pressures of the soils behind the walls. The passive

earth pressure can be calculated using Equation (7). A factor of safety of 2.0 should be used for passive earth pressure design. The design soil parameters are presented on Plates C-1a and C-1b, in Appendix C.

$$p_p = \gamma z K_p + 2c(K_p)^{1/2} \qquad \text{.....Equation (7)}$$

where, p_p = passive earth pressure (psf);
γ = wet unit weight of soil (pcf);
z = depth below ground surface for the point under consideration (ft);
K_p = coefficient of passive earth pressure;
c = cohesion of clayey soils (psf).

Due to subsurface variations, soils with different strengths and characteristics will likely be encountered at a given location. The soil resulting in the lowest passive pressure should be used for design of the walls. The soil conditions should be checked by geotechnical personnel to confirm the recommended soil parameters.

5.3.2 Tunnel Face Stability during Construction

5.3.2.1 General

The stability of a tunnel face is governed primarily by ground water and subsurface soil conditions, type of tunnel machine used, and workmanship. Based on the subsurface conditions encountered in our borings and the proposed invert depths, we anticipate that: (i) water-bearing dense to very dense silt (ML) will generally be encountered at the tunneling zone under Allen Parkway near Boring B-1. Secondary features such as sand or silt partings/seams/pockets/layers were also encountered within the cohesive soils, and could be significant at some locations. In addition, the type and property of subsurface soils are subject to change between borings, and may be different at locations away from our borings.

When granular soils are encountered during construction the tunnel face can become unstable. Granular soils below ground water will tend to flow into the excavation hole; granular soils above the ground water level will generally not stand unsupported but will tend to ravel until a stable slope is formed at the face with a slope equal to the angle of repose of the material in a loose state. Thus, granular soils are generally considered unstable in an unsupported excavation face; uncontrolled flowing soil can result in large loss of ground.

5.3.2.2 Anticipated Ground Behavior

A Stability Factor, $N_t = (P_z - P_a)/C_u$ may be used to evaluate the stability of an unsupported bore face in cohesive soils (N_t is not applicable to granular soils), where P_z is the overburden pressure to the bore centerline; P_a is the equivalent uniform interior pressure applied to the face; and C_u is the soil undrained shear strength. For bore/auger operations, no interior pressure is applied. Generally, N_t values of 4 or less are desirable as it represents a practical limit below which tunneling may be accomplished without significant difficulty. Higher N_t values usually lead to large deformations of the soil around the bore and problems associated with increased subsidence. It should be noted that the exposure time of the face is most important; with time, creep of the soil will occur, resulting in a reduction of shear strength. The N_t values will therefore increase when construction is slow.

N_t was unable to be determined for Boring B-1 due to the presence of sand strata within the tunnel zone depths. Where granular or soft cohesive soils are encountered, the Contractor should make provisions to stabilize the tunnel excavations. The Contractor should not base their bid on the above information alone, since granular soils may be encountered between boring locations; the Contractor should verify the subsurface conditions between boring locations or add a contingency.

We also estimated the maximum settlements [caused by volume loss if a slurry face machine (SFM) or earth pressure balance tunnel boring machine (EPB) is NOT used] at the proposed tunnel location and the results are included in Table 5.

Table 5. Tunnel Face Stability Factor and Estimated Settlements along Tunnel Alignment

Soil Boring/ Station	Tunnel Segment	Tunnel Invert Depth (ft)	Anticipated Soil Types in Tunnel Zone	Stability Factor N_t	S_{max} (in)	Note/Suggestion
B-1	Allen Parkway	23	Water-bearing, dense to very dense Silt (ML)	n/a	1.1	Flowing ground, suggest using earth pressure balance tunnel boring machine (EPB)

Note: S_{max} = Estimated settlement along the tunnel alignment due to volume loss if slurry face machine (SFM) or EPB are not used; not including consolidation settlement.

Ground Subsidence: Tunneling in soft ground often induces some degree of settlement (ground subsidence) of the overlying ground surface. If such settlement is excessive, it may cause damage to existing structures and services located above and/or near the tunnel zone.

Predicting the amount of loss of ground (or ground subsidence) due to tunneling is very difficult, primarily because of the uncertainty involved in the analysis: such as heterogeneous soil properties, subsurface variability, or lack of information about proposed construction equipment and techniques.

Based on Boring B-1, it should be noted that the estimated settlement at the Allen Parkway tunnel is 1.1 inches (which does not include consolidation settlement) or more, as indicated on Table 5, and dewatering will cause additional settlement due to increases in effective stress of the soil strata. The information in this report should be reviewed so that appropriate tunneling equipment and operation can be planned and factored into the construction plan and cost estimate. Plate D-8 in Appendix D provides a general guideline for Tunnel Boring Machine (TBM) selection. To limit the estimated settlement, we suggest that the tunnel construction consider the use of: (i) a close face, pressurized TBM (EPB); or (ii) jet grout to stabilize the saturated granular soils for the tunneling operation. However, the choice of tunneling machine will be selected by the Contractor.

5.3.2.3 Influence of Tunneling on Existing Structures

Loss of Soil Support for Adjoining Structures: Tunneling operations, when located close to existing structures, will relieve the vertical and lateral soil support that these structures rely upon for their foundation bearing capacity and lateral soil support. This can result in distress to the existing structures if appropriate precautions are not taken.

The tunnel influence zone is assumed to extend a distance of about 2.5i from the center of the tunnel, as shown on Plate D-9, in Appendix D. We estimated the resulting influence zones (extending from the centerline of the tunnel) to be approximately 44 feet (based on Boring B-1) if a EPB TBM is not used, although the values of tunnel influence zone presented are rough estimates.

AEC emphasizes that the size of the influence zone of a tunnel is difficult to determine because several factors influence the response of the soil to tunneling operations including type of soil, ground water level

and control method, type of tunneling equipment, tunneling operations, experience of operator, and other construction in the vicinity. Methods to prevent movement and/or distress to existing structures will require the services of a specialty contractor. The values of tunnel influence zone presented herein are therefore rough estimates.

5.3.3 Measures to Reduce Distress from Tunneling

To control tunneling face loss and reduce potential impact on existing foundations and structures, AEC recommends the use of a steel casing (or equivalent method) to support the tunnel excavation during tunnel construction. Considering the ground conditions discussed in Table 5 in Section 5.3.2.2 of this report, AEC recommends that the following tunneling operations be considered: (i) use a close face, pressurized TBM (EPB) and keep the pressure at least equal to if not greater than the combined soil and groundwater pressure in the ground at the tunnel level; (ii) if the contractor selects bore and jack operation, boring and jacking steel casing should be performed simultaneously to minimize the soil loss outside the steel casing; ground movement along the tunnel zone should be monitored during tunneling operation; and (iii) if excessive voids occur during tunneling, the contractor should immediately and completely grout the annular space between the steel casing and the ground at the tail of the machine, in accordance with Section 02425 of the latest COHSCS. It should be noted that grouting may increase friction resistance while advancing the casing and the contractor will need to address this condition as part of his tunnel work plan. Plate D-10, in Appendix D, provides a general guideline for selection of grouting material. The tunneling machine selection, tunneling operation, and grouting (as necessary) will be the full responsibility of the Contractor.

To reduce the potential for the tunneling to influence existing foundations or structures, we recommend that the outer edge of the influence zone of the tunnel be a minimum of 5 feet from the outer edge of the bearing (stress) zone of existing foundations. The bearing (stress) zone is defined by a line drawn downward from the outer edge of an existing foundation and inclined at an angle of 45 degrees to the vertical.

We recommend that the following situations be evaluated on a case by case basis, where:

- tunneling cannot be located farther than the minimum distance recommended above;
- tunneling cannot be located outside the stress zone of the foundations for existing structures;
- unstable soils are encountered near existing structures;
- heavily loaded or critical structures are located close to the influence zone of the tunnels;

As an option, existing structure foundations should be protected by adequate shoring or strengthened by underpinning or other techniques, provided that tunneling cannot be located outside the stress zone of the existing foundations.

Disturbance and loss of ground from the tunneling operation may create surface soil disturbance and subsidence which in turn may cause distress to existing structures (including underground utilities and pavements) located in the zone of soil disturbance. Any open-cut excavation in the proposed tunneling areas should be adequately shored.

5.3.4 Monitoring Existing Structures

The Contractor should be responsible for monitoring existing structures nearby and taking necessary action to mitigate impact to adjacent structures. Existing structures located close to the proposed construction excavations should be surveyed prior to construction and pre-existing conditions of such structures and their vicinity be adequately recorded. This can be accomplished by conducting a pre-construction survey, taking photographs and/or video, and documenting existing elevations, cracks, settlements, and other existing distress in the structures. The monitoring should include establishment of elevation monitor stations, crack gauges, and inclinometers, as required. The monitoring should be performed before, periodically during, and after construction. The data should be reviewed by qualified engineers in a timely manner to evaluate the impact on existing structures and develop plans to mitigate the impact, should it be necessary.

5.4 Manholes and Junction Boxes

Invert depths of manholes and junction boxes were not available at the time this report was prepared, but are assumed to be at or near the invert depths provided by HR Green for the storm sewers along the alignment. Cast-in-place and pre-cast manhole construction should be in general accordance with Sections 02081 and 02082 of the latest COHSCS, respectively. The Contractor should be responsible for designing, constructing and maintaining safe excavations for the proposed manholes. Manhole open-cut excavations shall be in general accordance with Section 5.2.2 of this report. Geotechnical recommendations to guide design of manholes and junction boxes are presented below.

5.4.1 Allowable Bearing Capacity

We assume mat foundations will be used for the manholes and junction boxes. Based on soils encountered in our borings, a net allowable bearing capacity of 1,000 psf for dead loads and 1,500 psf for total loads, whichever is critical should be used for mat foundations of the proposed manholes. These values include a factor of safety of 3 for dead load and 2 for total load, respectively. AEC should be notified if the manhole depths are different than what we assumed, so that the given bearing capacities can be revised as necessary.

The net footing pressure may be determined by:

1. Summing the weight of the load applied to the foundation, the weight of the foundation and the weight of soil backfill placed above the foundation.
2. Subtracting the weight of soil excavated from the foundation.
3. Dividing the result of items 1 and 2 by the base area of the foundation.

5.4.2 Uplift Resistance

The manholes should be designed to resist hydrostatic uplift. For uplift design of the underground structures, we recommend that the water level be assumed to be at the ground surface or 100-year flood elevation, whichever is more critical. If the dead weights of the structures are inadequate to resist uplift forces, toe extensions of the base slabs may be constructed so that the effective weight of the soil above the extended slabs can be utilized to resist the uplift forces. The unit buoyant weight of concrete can be taken as 90 pcf. The minimum recommended factors of safety against uplift should be 1.1 for concrete weight, 1.5 for soil weight and 3.0 for soil friction. Design soil parameters are included on Plates C-1a and C-1b, in Appendix C. Recommended design criteria for uplift resistance are shown on Plate D-11, in Appendix D.

5.4.3 Lateral Earth Pressures

Typically, there is no movement allowed for the walls of the manholes. Therefore, the walls should be designed for at-rest earth pressure. The magnitudes of these pressures will depend on the type and density of the backfill, surcharge on the backfill and hydrostatic pressure, if any. If the backfill is over-compacted or if highly plastic clays are placed behind the walls, the lateral earth pressure could exceed the vertical pressure. Typical backfill materials placed behind manhole walls in the Houston area include select fill and cement-stabilized sand.

Lateral pressure resulting from construction equipment or other surcharge should be taken into account by adding the equivalent uniformly distributed surcharge to the design lateral pressure. Hydrostatic pressure should also be included, unless adequate drainage is provided behind the walls. The at-rest earth pressure at depth z can be determined by Equation (8). The design soil parameters for earth pressure design are presented on Plates C-1a and C-1b, in Appendix C.

$$p_0 = (q_s + \gamma h_1 + \gamma' h_2) K_0 + \gamma_w h_2 \qquad \text{.....Equation (8)}$$

where,
- p_0 = at-rest earth pressure, (psf);
- q_s = uniform surcharge pressure, (psf);
- γ, γ' = wet and buoyant unit weights of soil, (pcf);
- h_1 = depth from ground surface to ground water table, (ft);
- h_2 = $z-h_1$, depth from ground water table to point under consideration, (ft);
- z = depth below ground surface, (ft);
- K_0 = coefficient of at-rest earth pressure;
- γ_w = unit weight of water, 62.4 pcf.

5.4.4 Manhole Backfill Material

Manhole and junction box bedding and backfill should be in accordance with the Sections 02316 and 02317 of the latest COHSCS.

5.5 Pavement Reconstruction

According to HR Green, for West Dallas Street, only the traffic lane where the trench excavations are located will be replaced with new concrete pavement, while the entirety of asphalt pavement along Gillette Street between Allen Parkway and West Dallas Street will be replaced with new concrete pavement. AEC assumes that the new pavement will be placed at or near existing grade.

Traffic design information such as traffic volume, types of vehicles, percentage of heavy trucks, traffic volume growth rate, and design life for the pavement was not available when this report was prepared.
The pavement design recommendations developed below are in accordance with the "AASHTO Guide for Design of Pavement Structures," 1993 edition.

5.5.1 Rigid Pavement

Rigid pavement design is based on the anticipated design number of 18-kip ESALs the pavement is subjected to during its design life. The parameters that were used in computing the rigid pavement section are as follows:

Overall Standard Deviation (S_0)	0.34
Initial Serviceability (P_0)	4.5
Terminal Serviceability (P_t)	2.0
Reliability Level (R)	95%
Overall Drainage Coefficient (C_d)	1.0
Load Transfer Coefficient (J)	3.2
Loss of Support Category (LS)	1.0
Roadbed Soil Resilient Modulus (M_R)	4,500 psi
Elastic Modulus (E_{sb}) of Stabilized Soils	20,000 psi
Composite Effective Modulus of Subgrade Reaction (k)	91 pci
Mean Concrete Modulus of Rupture (S'_c)	600 psi (at 28 days)
Concrete Elastic Modulus (E_c)	3.37×10^6 psi

According to HR Green, the proposed pavement section along West Dallas Street will match the existing pavement thickness. According to Boring B-4, the existing pavement thickness on West Dallas Street between Gillette Street and Genesee Street is 9 inches thick. The replacement pavement concrete thickness should also be 9 inches thick. In addition, according to HR Green, Gillette Street between Allen Parkway and West Dallas Street will also be reconstructed with 9 inch thick concrete pavement.

Table 6. Recommended Rigid Pavement Section

Pavement Layer	Thickness (in)
Portland Cement Concrete	9
Lime-stabilized Subgrade	8

Given the above design parameters, the 9 inch thick concrete pavement section should sustain 3,277,265 repetitions of 18-kip ESALs. The design engineer should verify whether the proposed pavement section will provide enough ESALs for the anticipated amount of site traffic. AEC should be notified if different standards or constants are required for pavement design at the site, so that our recommendations can be updated accordingly.

Concrete Pavement: Portland Cement Concrete (PCC) pavement should be constructed in accordance with Section 02751 of the latest COHSCS. According to Section 02751 of the latest COHSCS, concrete mix design has a required flexural strength of 600 psi at 28 days and field testing shall confirm a minimum concrete compressive strength of 3,500 psi at 28 days. *The Contractor shall be responsible for ensuring that a concrete mix design based on concrete compressive strength of 3,500 psi at 28 days also meets a minimum concrete flexural strength of 500 psi at 7 days and 600 psi at 28 days.*

5.5.2 Reinforcing Steel

Reinforcing steel should be in accordance with Section 02751 of the latest COHSCS. Reinforcing steel is required to control pavement cracks, deflections across pavement joints and resist warping stresses in rigid pavements. The cross-sectional area of steel (A_s) required per foot of slab width can be calculated as follows (for both longitudinal and transverse steel).

$$A_s = FLW/(2f_s) \qquad \text{.....Equation (9)}$$

where:
- A_s = Required cross-sectional area of reinforcing steel per foot width of pavement, in^2
- F = Coefficient of resistance between slab and subgrade, F = 1.8 for stabilized soil
- L = Distance between free transverse joints or between free longitudinal edges, ft.
- W = Weight of pavement slab per foot of width, lbs/ft
- f_s = Allowable working stress in steel, 0.75 x (yield strength), psi
  i.e. f_s = 45,000 psi for Grade 60 steel.

5.5.3 Pavement Subgrade Preparation

Existing pavement and base should be demolished in accordance with Section 02221 of the latest COHSCS. Subgrade preparation should extend a minimum of 2 feet beyond the paved area perimeters. After demolition of existing pavement and base, we recommend that a competent soil technician inspect the exposed subgrade to determine if there are any unsuitable soils or other deleterious materials. Excavate and dispose of unsuitable soils and other deleterious materials which will not consolidate; the excavation depth should be increased when inspection indicates the presence of organics and deleterious materials to greater depths. The exposed soils should be proof-rolled in accordance with Item 216 of the Texas Department of Transportation (TxDOT) Standard Specifications for Construction and Maintenance of Highways, Streets, and Bridges to identify and remove any weak, compressible, or other unsuitable materials; such materials should be replaced with compacted select fill.

Scarify the top 8 inches of the exposed subgrade and stabilize with at least 8 percent hydrated lime by dry soil weight. Lime stabilization shall be performed in accordance with Section 02336 of the latest COHSCS. The percentage of lime required for stabilization is a preliminary estimate for planning purposes only; laboratory testing should be performed to determine optimum contents for stabilization prior to construction. The stabilized soils should be compacted to 95 percent of their ASTM D 698 (Standard Proctor) dry density at a moisture content ranging from optimum to 3 percent above optimum.

5.6 Select Fill

Select fill should consist of uniform, non-active inorganic lean clays with a PI between 10 and 20 percent, and more than 50 percent passing a No. 200 sieve. Excavated material delivered to the site for use as select fill shall not have clay clods with PI greater than 20, clay clods greater than 2 inches in diameter, or contain sands/silts with PI less than 10. Prior to construction, the Contractor should determine if he or she can obtain qualified select fill meeting the above select fill criteria.

As an alternative to imported fill, on-site soils excavated during construction can be stabilized with hydrated lime. Excavated clay soils should be stabilized with at least 6 percent hydrated lime by dry soil weight. Lime stabilization shall be performed in accordance with Section 02336 of the latest COHSCS. The percentage of lime required for stabilization is a preliminary estimate for planning purposes only; laboratory testing should be performed to determine optimum contents for stabilization prior to construction. AEC prefers using stabilized on-site clay as select fill since compacted lime-stabilized clay generally has high shear strength, low compressibility, and relatively low permeability. Blended or mixed soils (sand and clay) should not be used as select fill.

All material intended for use as select fill should be tested prior to use to confirm that it meets select fill criteria. The fill should be placed in loose lifts not exceeding 8 inches in thickness. Backfill within 3 feet of walls or columns should be placed in loose lifts no more than 4-inches thick and compacted using hand tampers, or small self-propelled compactors. The lime-stabilized onsite soils or select fill should be compacted to a minimum of 95 percent of the ASTM D 698 (Standard Proctor) maximum dry unit weight at a moisture content ranging between optimum and 3 percent above optimum.

If imported select fill will be used, at least one Atterberg Limits and one percent passing a No. 200 sieve test shall be performed for each 5,000 square feet (sf) of placed fill, per lift (with a minimum of one set of tests per lift), to determine whether it meets select fill requirements. Prior to placement of pavement, the moisture contents of the top 2 lifts of compacted select fill shall be re-tested (if there is an extended period of time between fill placement and pavement construction) to determine if the in-place moisture content of the lifts have been maintained at the required moisture requirements.

6.0 CONSTRUCTION CONSIDERATIONS

6.1 Site Preparation

To mitigate site problems that may develop following prolonged periods of rainfall, it is essential to have adequate drainage to maintain a relatively dry and firm surface prior to starting any work at the site. Adequate drainage should be maintained throughout the construction period. Methods for controlling surface runoff and ponding include proper site grading, berm construction around exposed areas, and installation of sump pits with pumps.

6.2 Groundwater Control

The need for groundwater control will depend on the depth of excavation relative to the groundwater depth at the time of construction. In the event that there is heavy rain prior to or during construction, the groundwater table may be higher than indicated in this report; higher seepage is also likely and may require a more extensive groundwater control program. In addition, groundwater may be pressurized in certain areas of the alignment, requiring further evaluation and consideration of the excess hydrostatic pressures. Groundwater control should be in general accordance with Section 01578 of the latest COHSGR.

The Contractor should be responsible for selecting, designing, constructing, maintaining, and monitoring a groundwater control system and adapt his operations to ensure the stability of the excavations. Groundwater information presented in Section 4.1 and elsewhere in this report, along with consideration for potential environmental and site variation between the time of our field exploration and construction, should be incorporated in evaluating groundwater depths. The following recommendations are intended to guide the Contractor during design and construction of the dewatering system.

In cohesive soils seepage rates are lower than in granular soils and groundwater is usually collected in sumps and channeled by gravity flow to storm sewers. If cohesive soils contain significant secondary features, seepage rates will be higher. This may require larger sumps and drainage channels, or if significant granular layers are interbedded within the cohesive soils, methods used for granular soils may be required. Where it is present, pressurized groundwater will also yield higher seepage rates.

Groundwater for excavations within saturated sands can be controlled by the installation of wellpoints. The practical maximum dewatering depth for well points is about 15 feet. When groundwater control is required below 15 feet, possible ground water control measures include: (i) deep wells with turbine or submersible pumps; (ii) multi-staged well points; or (iii) water-tight sheet pile cut-off walls. Generally, the groundwater depth should be lowered at least 5 feet below the excavation bottom (in accordance with Section 01578 of the latest COHSGR) to be able to work on a firm surface when water-bearing granular soils are encountered.

Extended and/or excessive dewatering can result in settlement of existing structures in the vicinity; the Contractor should take the necessary precautions to minimize the effect on existing structures in the vicinity of the dewatering operation. We recommend that the Contractor verify the groundwater depths and seepage rates prior to and during construction and retain the services of a dewatering expert (if necessary) to assist him in identifying, implementing, and monitoring the most suitable and cost-effective method of controlling groundwater.

Note that extended and/or excessive dewatering can result in differential settlement of existing adjacent structures (such as the Federal Reserve Bank facility) as the groundwater table is lowered. Special care should be exercised to prevent a change of the groundwater level below the bank building and structures when performing dewatering operations for the storm sewer installation. One option to reduce such risk includes using a sheet pile cutoff wall to minimize seepage into the excavation, combined with a series of monitoring and reinjection wells (to maintain the ground table) around the construction area.

For open cut construction in cohesive soils, the possibility of bottom heave must be considered due to the removal of the weight of excavated soil. In lean and fat clays, heave normally does not occur unless the ratio of Critical Height to Depth of Cut approaches one. In silty clays, heave does not typically occur

unless an artificially large head of water is created through the use of impervious sheeting in bracing the cut. Guidelines for evaluating bottom stability are presented in Section 5.2.2 of this report.

Sheet Piling: Temporary water-tight sheet piling can installed to support excavations and also to control groundwater seepage into the excavations. Design soil parameters for sheet pile design are presented on Plates C-1a and C-1b, in Appendix C. AEC recommends that the sheet pile design consider both short-term and long-term parameters; whichever is critical should be used for design. The determination of the pressures exerted on the sheet piles by the retained soils shall consider active earth pressure, hydrostatic pressure, and uniform surcharge (including construction equipment, soil stockpiles, and traffic load, whichever surcharge is more critical).

Sheet pile design should be based on the following considerations:

(1) Ground water elevation at the top of the ground surface on the retained side;
(2) Ground water elevation 5 feet below the bottom of the access shaft excavation (assuming dewatering operations using deep wells);
(3) Neglect cohesion for active pressure determination, Equation (6) in Section 5.2.2 of this report;
(4) The design retained height should extend from the ground surface to the water line tunnel invert depth;
(5) A 300 psf uniform surcharge pressure from construction equipment or soil stockpiles should be considered at the top of the sheet piles; loose soil stockpiles during access shaft construction should be limited to 3 foot high or less;
(6) Use a Factor of Safety of 2.0 for passive earth pressure in front of (i.e. the shaft side) the sheet piles.

Design, construction, and monitoring of sheet piles should be performed by qualified personnel who are experienced in this operation. Sheet piles should be driven in pairs, and proper construction controls provided to maintain alignment along the wall and prevent outward leaning of the sheet piles. Construction of the sheet piles should be in accordance with the latest COHSCS, or equivalent standard, such as Item 407 of the 2004 TxDOT Standard Specifications.

6.3 Construction Monitoring

Pavement construction and subgrade preparation, as well as excavation, bedding, and backfilling of underground utilities should be monitored by qualified geotechnical professionals to check for compliance with project documents and changed conditions, if encountered. AEC should be allowed to review the

design and construction plans and specifications prior to release to check that the geotechnical recommendations and design criteria presented herein are properly interpreted.

6.4 Monitoring of Existing Structures

Existing structures in the vicinity of the proposed alignment should be closely monitored prior to, during, and for a period after excavation. Several factors (including soil type and stratification, construction methods, weather conditions, other construction in the vicinity, construction personnel experience and supervision) may impact ground movement in the vicinity of the alignment. We therefore recommend that the Contractor be required to survey and adequately document the condition of existing structures in the vicinity of the proposed alignments.

7.0 LIMITATIONS

The information contained in this report summarizes conditions found on the dates the borings were drilled. The attached boring logs are true representations of the soils encountered at the specific boring locations on the dates of drilling. Reasonable variations from the subsurface information presented in this report should be anticipated. If conditions encountered during construction are significantly different from those presented in this report; AEC should be notified immediately.

This investigation was performed using the standard level of care and diligence normally practiced by recognized geotechnical engineering firms in this area, presently performing similar services under similar circumstances. This report is intended to be used in its entirety. The report has been prepared exclusively for the project and location described in this report. If pertinent project details change or otherwise differ from those described herein, AEC should be notified immediately and retained to evaluate the effect of the changes on the recommendations presented in this report, and revise the recommendations if necessary. The recommendations presented in this report should not be used for other structures located along these alignments or similar structures located elsewhere, without additional evaluation and/or investigation.

AVILES
ENGINEERING CORP.

8.0 CLOSING REMARKS

AEC appreciates the opportunity to be of service on this project and looks forward to our continuing association during the construction phase of this project and on future projects.

AVILES ENGINEERING CORPORATION
(TBPE Firm Registration No. F-42)

7/17/2013

STATE OF TEXAS
WILBER L. WANG
99226
LICENSED
PROFESSIONAL ENGINEER

Wilber L. Wang, M.Eng., P.E.
Project Engineer

Shou Ting Hu, M.S.C.E., P.E.
President

July 17, 2013

Copies Submitted: 3 HR Green, Inc.

Z:\ENGINEERING\Reports\2012\166-12 COH Montrose Area & Midtown Storm Sewer Improvements - HR Green, Inc. (Wilber)\G166-12 Segment A Final.docx

AVILES ENGINEERING CORP.

APPENDIX A

Plate A-1	Vicinity Map
Plate A-2	Boring Location Plan
Plates A-3 thru A-7	Boring Logs
Plate A-8	Key to Symbols
Plate A-9	Classification of Soils for Engineering Purposes
Plate A-10	Terms Used on Boring Logs
Plate A-11	ASTM & TXDOT Designation for Soil Laboratory Tests
Plate A-12	Sieve Analysis Results

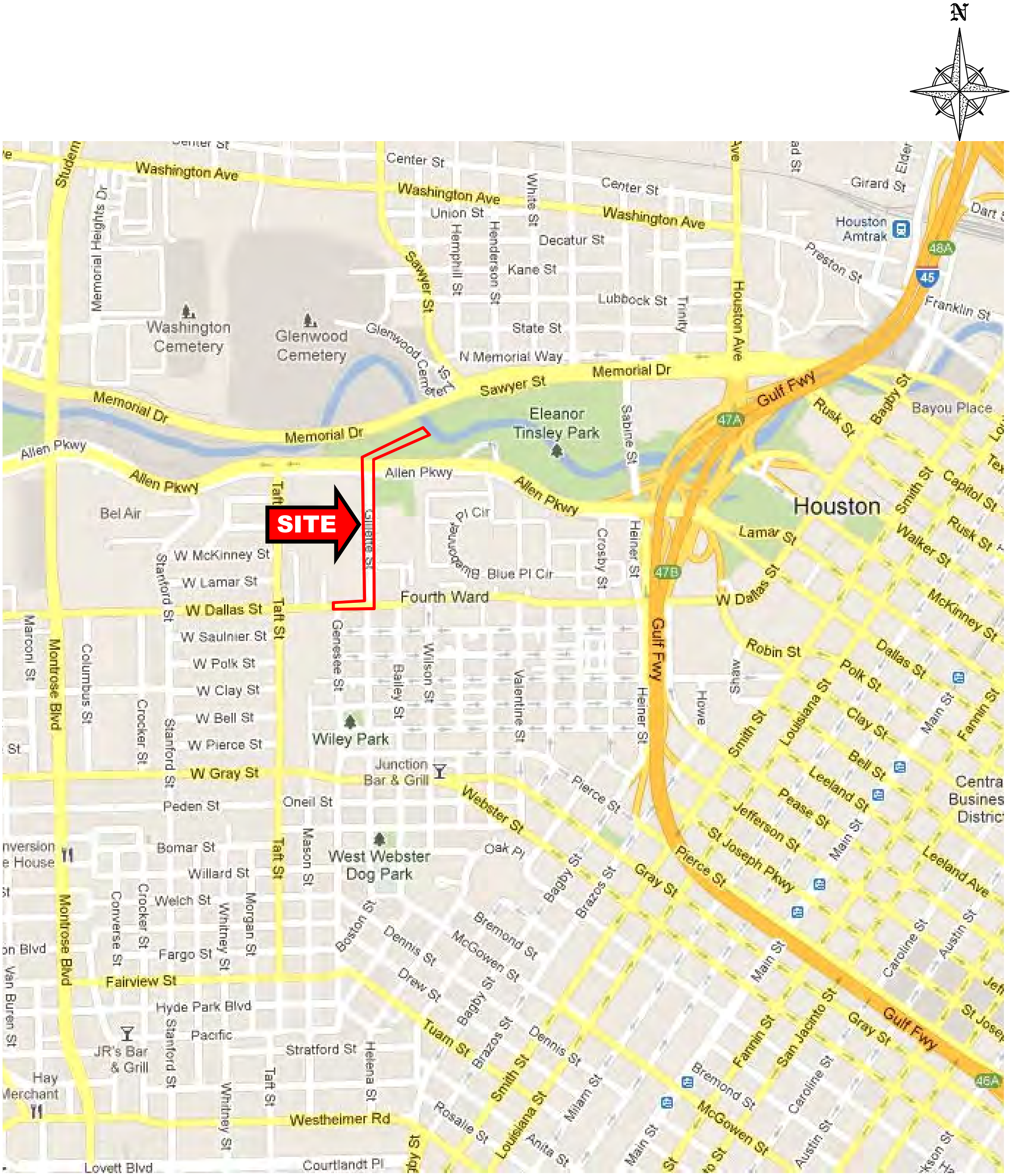

AVILES ENGINEERING CORPORATION

VICINITY MAP

MONTROSE AREA AND MIDTOWN DRAINAGE
AND PAVEMENT SUB-PROJECT II
HOUSTON, TEXAS

AEC PROJECT NO.:	DATE:	SOURCE DRAWING PROVIDED BY:
G166-12	02-09-13	GOOGLE MAPS
APPROX. SCALE:	DRAFTED BY:	PLATE NO.:
N.T.S.	WIW	PLATE A-1

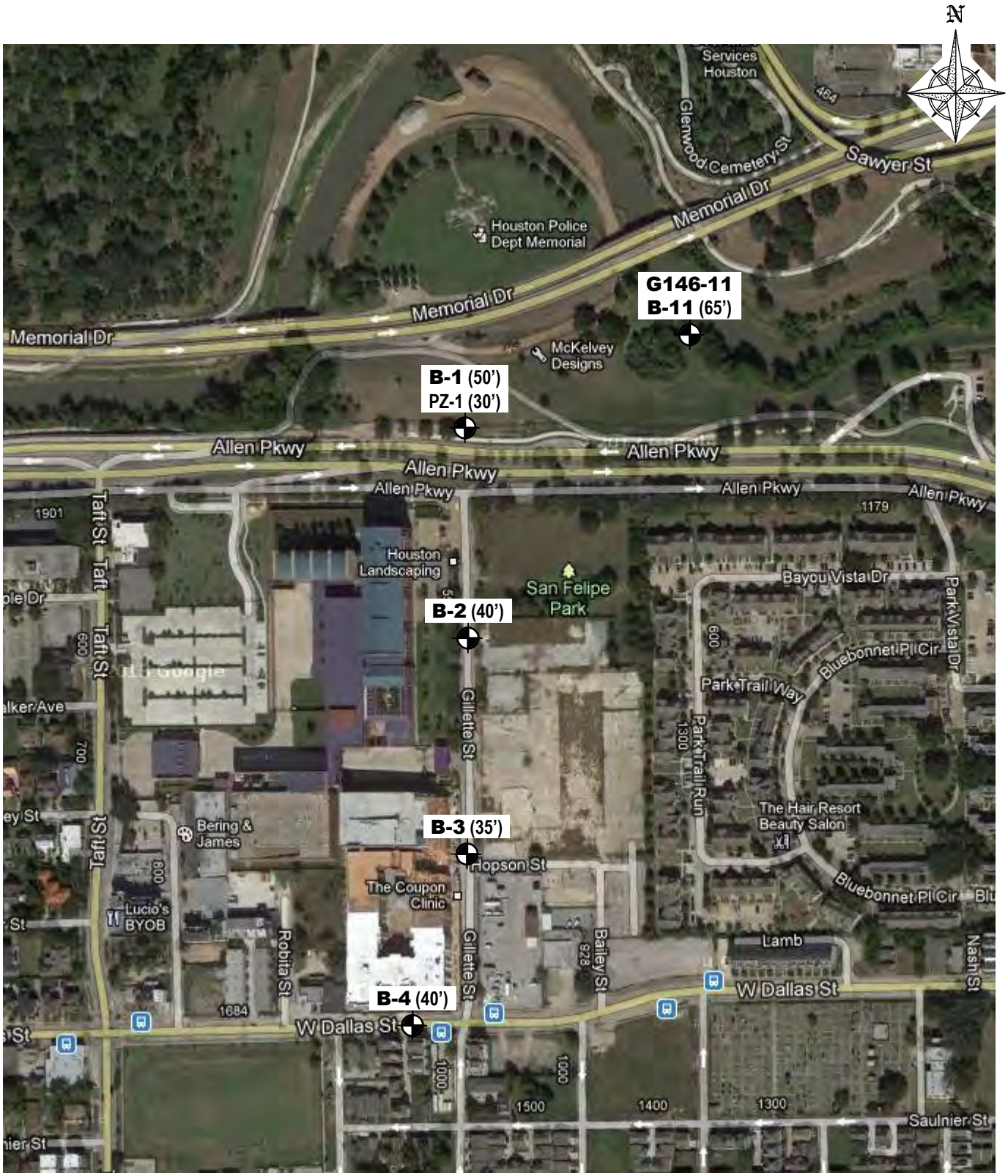

AVILES ENGINEERING CORPORATION

BORING LOCATION PLAN

MONTROSE AREA AND MIDTOWN DRAINAGE
AND PAVEMENT SUB-PROJECT II
HOUSTON, TEXAS

AEC PROJECT NO.:	DATE:	SOURCE DRAWING PROVIDED BY:
G166-12	02-09-13	GOOGLE MAPS
APPROX. SCALE:	DRAFTED BY:	PLATE NO.:
N.T.S.'	WIW	PLATE A-2

AVILES ENGINEERING CORP.
5790 Windfern
Houston, Texas
Telephone: (713) 895-7645
Fax: (713) 895-7943

LOG OF BORING B-11

PROJECT: BUFFALO BAYOU PARK
HOUSTON, TEXAS

PROJECT NO.: G146-11

BORING TYPE: 4" DRY AUGER / WET ROTARY

DATE: 6/20/11

SURFACE ELEVATION (FT.): 19.20

LOCATION

Northing: 13842324.65
Easting: 3116391.77

DEPTH (ft.)	SAMPLES	USC	WATER LEVEL	MATERIAL DESCRIPTION	FIELD STRENGTH DATA	DRY DENSITY (pcf)	UU / UC SHEAR STRENGTH (tsf)	FAILURE STRAIN (%)	CONFINING PRESSURE (psi)	MOISTURE CONTENT (%)	LIQUID LIMIT (LL)	PLASTIC LIMIT (PL)	PLASTICITY INDEX (PI)	PASSING #200 SIEVE (%)	ESTIMATED ANGLE OF INTERNAL FRICTION (°), OTHER TESTS & REMARKS
0				FILL: SILTY CLAYEY SAND(SC-SM), slight plasticity, light gray and tan, with ferrous stains, moist	P=4.5	86	4.47	1.5	0	4	29	22	7	45	
					P=4.5					5					
				-with silt partings 2'-4'											
5		SM		SILTY SAND (SM), very loose to medium dense, no plasticity, light gray and tan, dry to moist	N=15					3					
					N=15					3				20	
				-gray 8'-10'	N=4					10					
10				-tan 10'-12'	N=5					6					
				-tan and gray 12'-14'	N=14					7				25	
				-gray, with clay pockets 14'-16'	N=14					13					
15		SP SM		POORLY GRADED SAND WITH SILT (SP-SM), medium dense, no plasticity, tan, moist	N=12					18				6	
		SM			N=8					20					
20				SILTY SAND (SM), loose to medium dense, no plasticity, tan, wet											
				-gray 23'-25'	N=14					21				19	
25															
		CL		SANDY LEAN CLAY (CL), firm, tan and light gray, moist	N=5					22					
30		SM		SILTY SAND (SM), very dense, no plasticity, tan, wet											
					N=72					23	NP	NP	NP		
35															
					N=57					22				26	
40															

Natural Moisture Content and Atterberg Limits: Plastic Limit — Moisture Content — Liquid Limit (20 40 60 80)

Water Level Est.: ▽ Measured: ▼ Perched: ▼

Water Observations: Water encountered at 18' during drilling. Measured water at 17.6' approx 15 min after initial encounter, and at 6.9' approx 24 hrs after drilling.

Sample Key: SPT Shelby Tube Disturbed (Auger)

Key to Abbreviations:

N -SPT Data (blows/ft)
P -Pocket Penetrometer (tsf)
T -Torvane
C_u -Undrained Cohesion (tsf)
SS-Shear Strength (P/2, tsf)

Notes:

AVILES ENGINEERING CORP.
5790 Windfern
Houston, Texas
Telephone: (713) 895-7645
Fax: (713) 895-7943

LOG OF BORING B-11

PROJECT: BUFFALO BAYOU PARK
HOUSTON, TEXAS

PROJECT NO.: G146-11

BORING TYPE: 4" DRY AUGER / WET ROTARY

DATE: 6/20/11

SURFACE ELEVATION (FT.): 19.20

LOCATION

Northing: 13842324.65
Easting: 3116391.77

DEPTH (ft.)	SAMPLES	USC	WATER LEVEL	MATERIAL DESCRIPTION	FIELD STRENGTH DATA	DRY DENSITY (pcf)	UU / UC SHEAR STRENGTH (tsf)	FAILURE STRAIN (%)	CONFINING PRESSURE (psi)	MOISTURE CONTENT (%)	ATTERBERG LIMITS(%) LIQUID LIMIT (LL)	PLASTIC LIMIT (PL)	PLASTICITY INDEX (PI)	PASSING #200 SIEVE (%)	ESTIMATED ANGLE OF INTERNAL FRICTION (°), OTHER TESTS & REMARKS
		CH		FAT CLAY (CH), stiff to hard, very high plasticity, reddish brown, with slickensides and ferrous stains, moist	P=2.0					41					
45					P=2.0	84	0.92	4.4	22	39					
50				-light gray 53'-55'	P=2.5					32	70	28	42		
55				-gray and tan 58'-60'	P=2.5	91	0.97	2.2	25	31					
60				-brown and gray 63'-65'	P=4.25					29					
65				Termination depth = 65 feet.											

Field strength data: ● BLOW COUNT ● (20 40 60 80); ▲ C_u (tsf) ▲ (1.0 2.0 3.0 4.0); ■ SS (tsf) ■ (1.0 2.0 3.0 4.0); ◆ Torvane (psi) ◆ (200 400 600 800)

Natural Moisture Content and Atterberg Limits: Plastic Limit — Moisture Content — Liquid Limit (20 40 60 80)

Water Level Est.: ▽ Measured: ▼ Perched: ▼

Water Observations: Water encountered at 18' during drilling. Measured water at 17.6' approx 15 min after initial encounter, and at 6.9' approx 24 hrs after drilling.

Sample Key: ☒ SPT ☐ Shelby Tube ☐ Disturbed (Auger)

Key to Abbreviations:

N -SPT Data (blows/ft)
P -Pocket Penetrometer (tsf)
T -Torvane
C_u -Undrained Cohesion (tsf)
SS-Shear Strength (P/2, tsf)

Notes:

AVILES ENGINEERING CORP. GEOTECHNICAL ENGINEERS

PROJECT: **Montrose and Midtown Storm Sewers** BORING **B-1**

DATE **1/17/13** TYPE **4" Dry Auger/Wet Rotary** LOCATION **See Boring Location Plan**

Survey Coordinates (ft):
Easting: 3116290.669
Northing: 13843936.39
Elevation: 42.419

SHEAR STRENGTH, TSF: △ Confined Compression; ● Unconfined Compression; ○ Pocket Penetrometer; □ Torvane (0.5, 1, 1.5, 2)

DEPTH IN FEET	DESCRIPTION	S.P.T. BLOWS / FT.	MOISTURE CONTENT, %	DRY DENSITY, PCF	-200 MESH	LIQUID LIMIT	PLASTIC LIMIT	PLASTICITY INDEX
0	Fill: hard, brown and gray Sandy Lean Clay (CL), with calcareous nodules		15		60	28	12	16
	-with gravel 0'-2' -tan 2'-4'		11	116				
	Loose to medium dense, tan Silty Sand (SM) -with clayey sand pockets 4'-6'	12	6					
6		8	3					
	-with silt partings 8'-10'	28	2		17			
	-boring caved at 10' during drilling							
	Very stiff to hard, gray and tan Silty Clay w/ Sand (CL-ML)	24	13					
12	-light tan, with ferrous stains 12'-14'		10		76	20	13	7
	Dense to very dense, light tan Silt (ML), with clayey sand seams	32	12					
		41	14					
18		47	14		86			
24		52	16					
	Medium dense, light gray Clayey Sand (SC), with lean clay seams	25	17		42			
30	Stiff to hard, red and gray Fat Clay (CH)							
	-with sandy silt pockets 33'-35'		21	102				
36								
	-with slickensides 38'-40'		26		100	60	27	33
42	Very soft to soft, red Lean Clay (CL), with abundant silt seams							

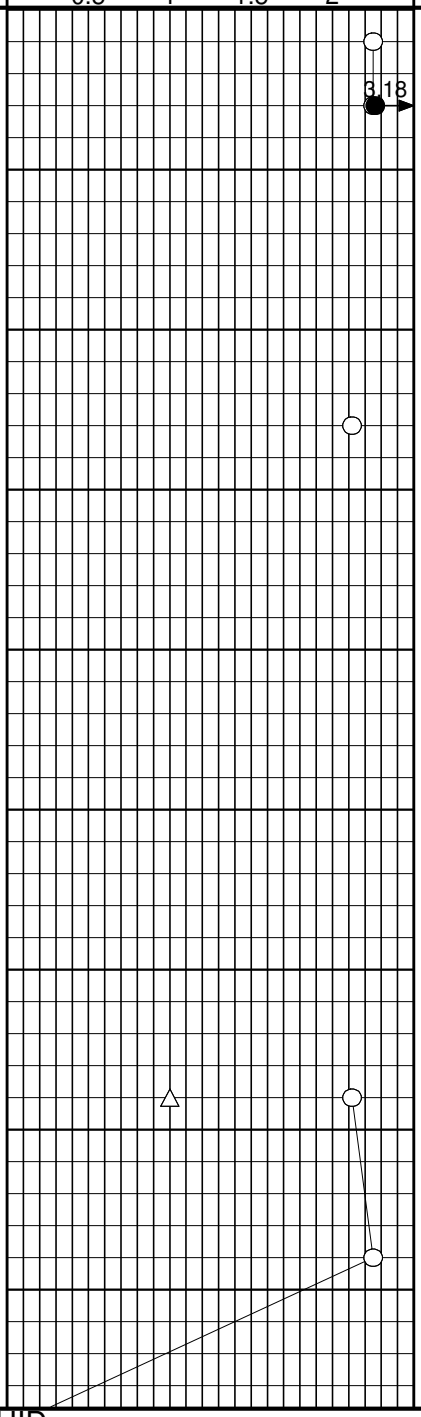

BORING DRILLED TO **12** FEET WITHOUT DRILLING FLUID
WATER ENCOUNTERED AT **10** FEET WHILE DRILLING
WATER LEVEL AT **10** FEET AFTER **1/4 HR**
DRILLED BY **Van and Sons** CHECKED BY **WW** LOGGED BY **RJM**

AVILES ENGINEERING CORP. GEOTECHNICAL ENGINEERS

PROJECT: **Montrose and Midtown Storm Sewers** BORING **B-1**

DATE **1/17/13** TYPE **4" Dry Auger/Wet Rotary** LOCATION **See Boring Location Plan**

DEPTH IN FEET	SYMBOL	SAMPLE INTERVAL	DESCRIPTION	S.P.T. BLOWS / FT.	MOISTURE CONTENT, %	DRY DENSITY, PCF	-200 MESH	LIQUID LIMIT	PLASTIC LIMIT	PLASTICITY INDEX
			Lean Clay (CL) (cont.)		27					
48			Hard, reddish brown Fat Clay (CH), with slickensides		19	109	100	58	26	32
			Termination Depth = 50 feet							
54										
60										
66										
72										
78										
84										

SHEAR STRENGTH, TSF

△ Confined Compression
● Unconfined Compression
○ Pocket Penetrometer
□ Torvane

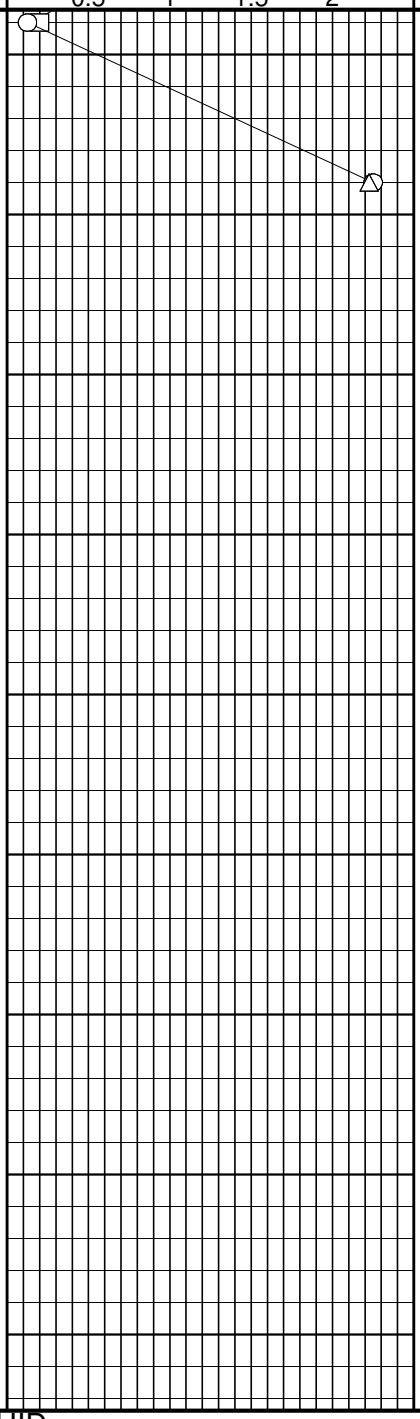

BORING DRILLED TO **12** FEET WITHOUT DRILLING FLUID

WATER ENCOUNTERED AT **10** FEET WHILE DRILLING

WATER LEVEL AT **10** FEET AFTER **1/4 HR**

DRILLED BY **Van and Sons** CHECKED BY **WW** LOGGED BY **RJM**

AVILES ENGINEERING CORP. GEOTECHNICAL ENGINEERS

PROJECT: **Montrose and Midtown Storm Sewers** BORING **B-2**

DATE **1/16/13** TYPE **4" Dry Auger/Wet Rotary** LOCATION **See Boring Location Plan**

Survey Coordinates (ft):
Easting: 3116306.586
Northing: 13843388.33
Elevation: 47.029

DEPTH IN FEET	DESCRIPTION	S.P.T. BLOWS / FT.	MOISTURE CONTENT, %	DRY DENSITY, PCF	-200 MESH	LIQUID LIMIT	PLASTIC LIMIT	PLASTICITY INDEX
0	Pavement: 1.5" asphalt		14					
	Base: 8" crushed limestone		11					
	Fill: gravel and shell, with sandy clay		17	112	81	47	18	29
	Very stiff, gray and tan Lean Clay w/Sand (CL), with calcareous nodules		19					
6	-reddish brown, with silty clay pockets and ferrous stains 4'-6'		17	111	46	29	16	13
	Tan and reddish brown Clayey Sand (SC) -with clayey silt pockets 6'-8' -tan, with sandy clay layers 8'-10'		6					
	Medium dense to very dense, tan Silty Sand (SM)	38	6					
12	-reddish tan and brown 12'-14', with sandy clay pockets 12'-16'	30	8		20			
	-orange 14'-16'	29	12					
		44	6					
18	-with fat clay layers 18'-20'	74	14		14			
	Very stiff to hard, tan and gray Fat Clay (CH), with slickensides							
24	-boring caved at 23.5' during drilling		28	97	100	69	25	44
	Firm, light tan Lean Clay (CL), with abundant silt seams		20					
30								
	Dense, light tan Silty Sand (SM)	39	19		36			
36								
	Very stiff, red Fat Clay (CH), with silt layers		26			56	25	31
	Termination Depth = 40 feet							
42								

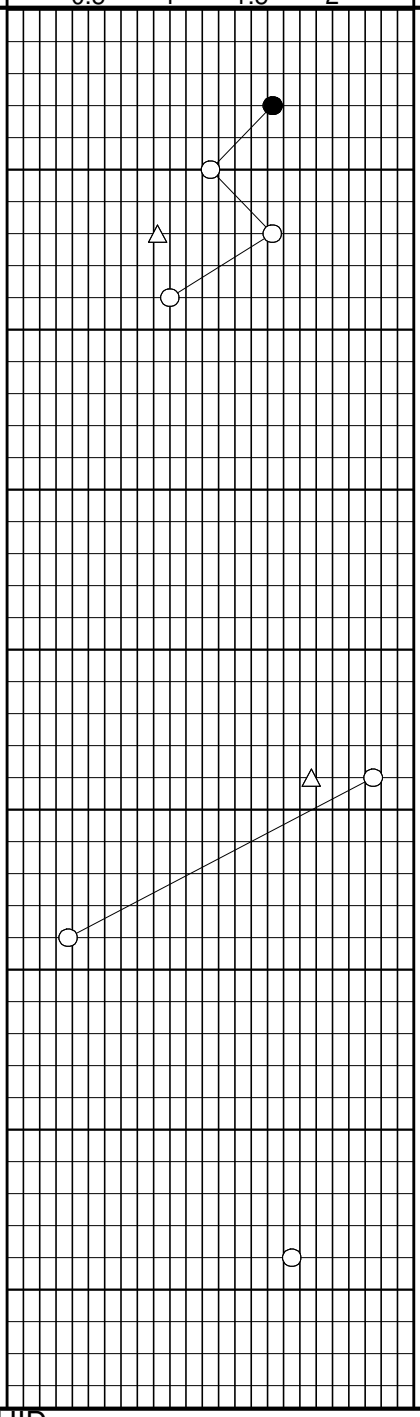

BORING DRILLED TO **26** FEET WITHOUT DRILLING FLUID
WATER ENCOUNTERED AT **23.5** FEET WHILE DRILLING
WATER LEVEL AT **23.5** FEET AFTER **1/4 HR**
DRILLED BY **Van and Sons** CHECKED BY **WW** LOGGED BY **RJM**

AVILES ENGINEERING CORP. GEOTECHNICAL ENGINEERS

PROJECT: **Montrose and Midtown Storm Sewers** BORING **B-3**

DATE **1/16/13** TYPE **4" Dry Auger/Wet Rotary** LOCATION **See Boring Location Plan**

Survey Coordinates (ft):
Easting: 3116309.75
Northing: 13842955.19
Elevation: 50.868

DEPTH IN FEET	DESCRIPTION	S.P.T. BLOWS / FT.	MOISTURE CONTENT, %	DRY DENSITY, PCF	-200 MESH	LIQUID LIMIT	PLASTIC LIMIT	PLASTICITY INDEX
0	Pavement: 1.5" asphalt		3		87	58	15	43
	Base: 9.5" crushed limestone		24					
	Stiff to very stiff, dark tan Fat Clay (CH)		20	110				
6	Stiff to hard, dark brown Lean Clay w/Sand (CL), with ferrous nodules		17					
	-gray and tan, with calcareous nodules 6'-10'		17		77	43	18	25
			17	108				
12	Very stiff, gray and tan Sandy Lean Clay (CL), with abundant silt seams and calcareous nodules	25	18					
	-dark tan 12'-14'	28	16		69			
	-tan 14'-16'	22	16					
18	Stiff to hard, reddish brown and gray Fat Clay (CH), with slickensides		23		93	60	19	41
	-with silty sand layer 18.5'-19'		20	108				
24	-gray and tan 23'-35'		16					
30	-with calcareous nodules 28'-30'		23	102	95	61	25	36
	-boring caved at 33' during drilling		20					
36	Termination Depth = 35 feet							
42								

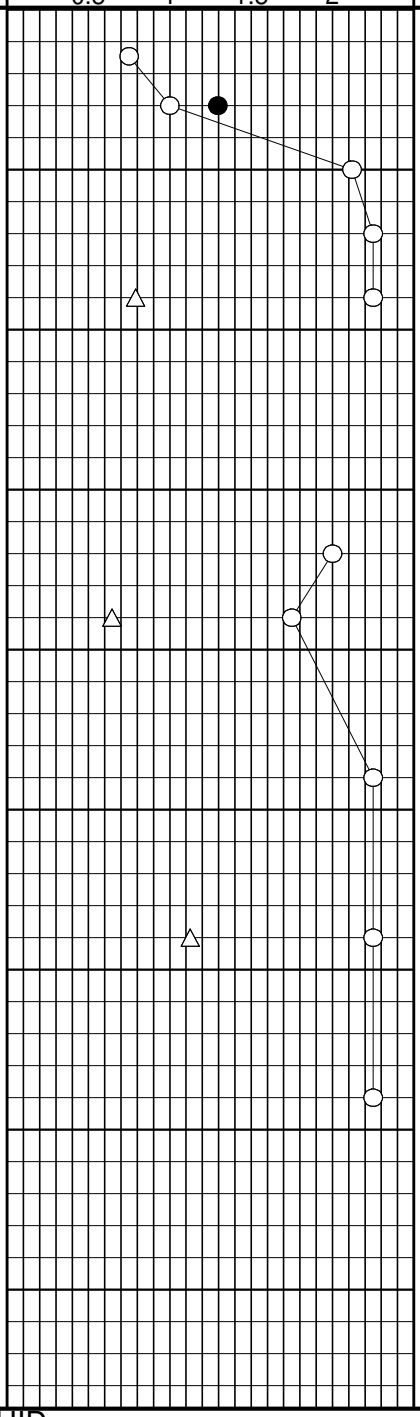

BORING DRILLED TO **35** FEET WITHOUT DRILLING FLUID
WATER ENCOUNTERED AT **33** FEET WHILE DRILLING
WATER LEVEL AT **32.6** FEET AFTER **1/4 HR**
DRILLED BY **Van and Sons** CHECKED BY **WW** LOGGED BY **RJM**

AVILES ENGINEERING CORP. GEOTECHNICAL ENGINEERS

PROJECT: **Montrose and Midtown Storm Sewers** BORING **B-4**

DATE **1/16/13** TYPE **4" Dry Auger/Wet Rotary** LOCATION **See Boring Location Plan**

Survey Coordinates (ft):
Easting: 3116211.783
Northing: 13842566.34
Elevation: 49.657

DEPTH IN FEET	DESCRIPTION	MOISTURE CONTENT, %	DRY DENSITY, PCF	-200 MESH	LIQUID LIMIT	PLASTIC LIMIT	PLASTICITY INDEX
0	Pavement: 9" concrete						
	Base: 4" stabilized sand, with gravel	27					
	Fill: stiff to very stiff, gray and tan Fat Clay (CH), with ferrous stains	22		87	57	17	40
	Fill: very stiff, tan and gray Sandy Lean Clay (CL), with siltstone fragments, calcareous nodules, and ferrous stains	18	113				
6		16					
	Stiff to hard, tan Lean Clay w/Sand (CL), with siltstone fragments, calcareous nodules, and ferrous stains	18		83	32	15	17
	-tan and light gray 8'-12'	20	113				
12	Light gray and tan Clayey Sand (SC), with calcareous nodules and ferrous stains	14					
	-with siltstone fragments 12'-14'	16		45	33	15	18
	Stiff to very stiff, reddish brown and light gray Fat Clay (CH)	31	92				
18	Hard, light gray and tan Lean Clay (CL), with ferrous stains	15					
	Very stiff to hard, reddish brown and light gray Fat Clay (CH), with slickensides						
24	-with ferrous stains 23'-25'	24		95	64	19	45
	-with siltstone fragments 28'-40' and calcareous nodules 28'-35'	21	109				
30							
		24					
36							
		24	101	100	68	28	40
	Termination Depth = 40 feet						
42							

SHEAR STRENGTH, TSF

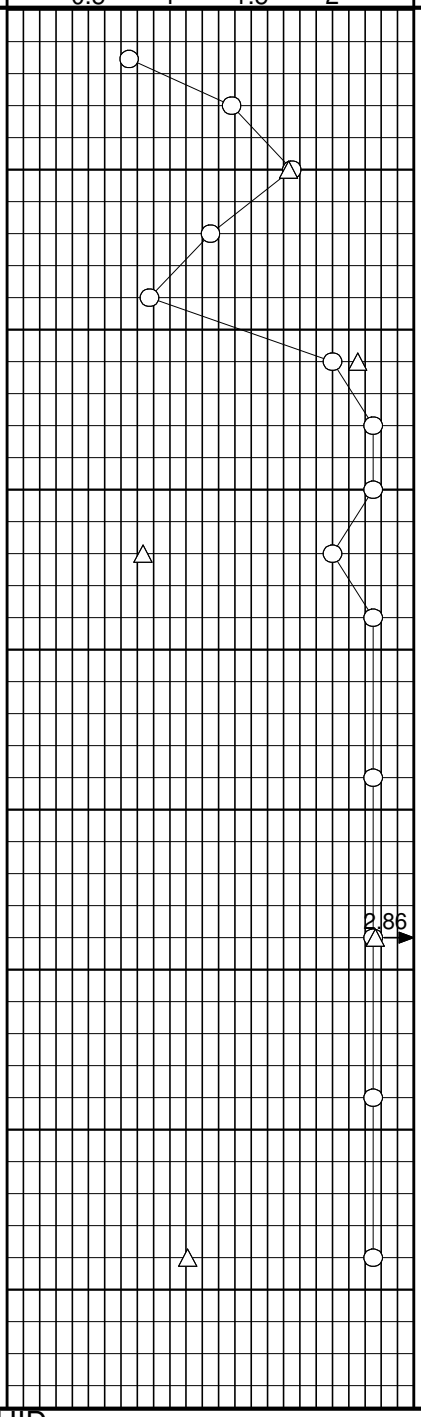

△ Confined Compression
● Unconfined Compression
○ Pocket Penetrometer
□ Torvane

BORING DRILLED TO **25** FEET WITHOUT DRILLING FLUID
WATER ENCOUNTERED AT **25** FEET WHILE DRILLING
WATER LEVEL AT **24** FEET AFTER **1/4 HR**
DRILLED BY **Van and Sons** CHECKED BY **WW** LOGGED BY **RJM**

KEY TO SYMBOLS

Symbol	Description
Strata symbols	
	Fill
	Silty sand
	Silty low plasticity clay
	Silt
	Clayey sand
	High plasticity clay
	Low plasticity clay
	Paving
Misc. Symbols	
	Water table depth during drilling
	Subsequent water table depth
	Torvane
	Pocket Penetrometer
	Unconfined Compression
	Confined Compression
Soil Samplers	
	Undisturbed thin wall Shelby tube

Symbol	Description
	Standard penetration test
	Auger

AYLES ENGINEERING CORP.

CLASSIFICATION OF SOILS FOR ENGINEERING PURPOSES

ASTM Designation D-2487

MAJOR DIVISIONS				GROUP SYMBOL	TYPICAL NAMES
COARSE-GRAINED SOILS (Less than 50% passes No. 200 sieve)	GRAVELS (Less than 50% of coarse fraction passes No. 4 sieve)	CLEAN GRAVELS (Less than 5% passes No. 200 sieve)		GW	Well-graded gravel, well-graded gravel with sand
				GP	Poorly-graded gravel, poorly-graded gravel with sand
		GRAVELS WITH FINES (More than 12% passes No. 200 sieve)	Limits plot below "A" line & hatched zone on plasticity chart	GM	Silty gravel, silty gravel with sand
			Limits plot above "A" line & hatched zone on plasticity chart	GC	Clayey gravel, clayey gravel with sand
	SANDS (50% or more of coarse fraction passes No. 4 sieve)	CLEAN SANDS (Less than 5% passes No. 200 sieve)		SW	Well-graded sand, well-graded sand with gravel
				SP	Poorly-graded sand, poorly-graded sand with gravel
		SANDS WITH FINES (More than 12% passes No. 200 sieve)	Limits plot below "A" line & hatched zone on plasticity chart	SM	Silty sand, silty sand with gravel
			Limits plot above "A" line & hatched zone on plasticity chart	SC	Clayey sand, clayey sand with gravel
FINE-GRAINED SOILS (50% or more passes No. 200 sieve)		SILTS AND CLAYS (Liquid Limit Less Than 50%)		ML	Silt, silt with sand, silt with gravel, sandy silt, gravelly silt
				CL	Lean clay, lean clay with sand, lean clay with gravel, sandy lean clay, gravelly lean clay
				OL	Organic clay, organic clay with sand, sandy organic clay, organic silt, sandy organic silt
		SILTS AND CLAYS (Liquid Limit 50% or More)		MH	Elastic silt, elastic silt with sand, sandy elastic silt, gravelly elastic silt
				CH	Fat clay, fat clay with sand, fat clay with gravel, sandy fat clay, gravelly fat clay
				OH	Organic clay, organic clay with sand, sandy organic clay, organic silt, sandy organic silt

NOTE: Coarse soils between 5% and 12% passing the No. 200 sieve and fine-grained soils with limits plotting in the hatched zone of the plasticity chart are to have dual symbols.

PLASTICITY CHART

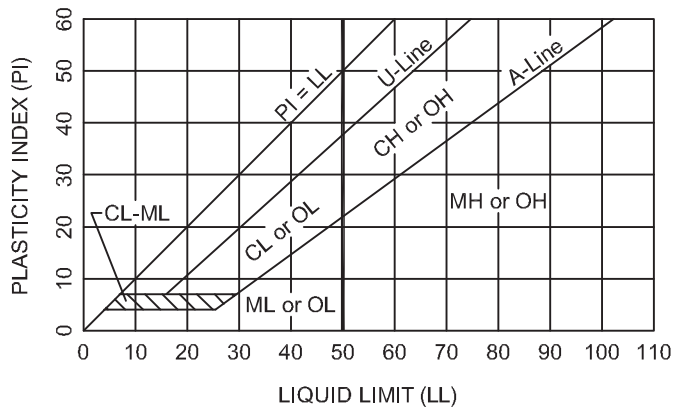

Equation of A-Line: Horizontal at PI=4 to LL=25.5, then PI=0.73(LL-20)

Equation of U-Line: Vertical at LL=16 to PI=7, then PI=0.9(LL-8)

DEGREE OF PLASTICITY OF COHESIVE SOILS

Degree of Plasticity	Plasticity Index
None	0 - 4
Slight	5 - 10
Medium	11 - 20
High	21 - 40
Very High	>40

SOIL SYMBOLS

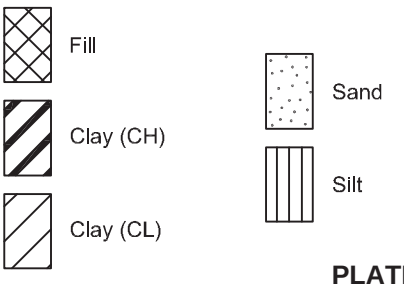

PLATE A-9

AYLES ENGINEERING CORP.

TERMS USED ON BORING LOGS

SOIL GRAIN SIZE

U.S. STANDARD SIEVE

6"	3"	3/4"	#4	#10	#40	#200	
BOULDERS	COBBLES	GRAVEL		SAND		SILT	CLAY
		COARSE	FINE	COARSE	MEDIUM	FINE	
152	76.2	19.1	4.76	2.00	0.420	0.074	0.002

SOIL GRAIN SIZE IN MILLIMETERS

STRENGTH OF COHESIVE SOILS

Consistency	Undrained Shear Strength, Kips per Sq. ft.
Very Soft	less than 0.25
Soft	0.25 to 0.50
Firm	0.50 to 1.00
Stiff	1.00 to 2.00
Very Stiff	2.00 to 4.00
Hard	greater than 4.00

RELATIVE DENSITY OF COHESIONLESS SOILS FROM STANDARD PENETRATION TEST

Very Loose	<4 bpf
Loose	5-10 bpf
Medium Dense	11-30 bpf
Dense	31-50 bpf
Very Dense	>50 bpf

SPLIT-BARREL SAMPLER DRIVING RECORD

Blows per Foot	Description
25	25 blows driving sampler 12 inches, after initial 6 inches of seating.
50/7"	50 blows driving sampler 7 inches, after initial 6 inches of seating.
Ref/3"	50 blows driving sampler 3 inches, during initial 6-inches seating interval.

NOTE: To avoid change to sampling tools, driving is limited to 50 blows during or after seating interval.

DRY STRENGTH ASTM D2488

None	Dry specimen crumbles into powder with mere pressure of handling
Low	Dry specimen crumbles into powder with some finger pressure
Medium	Dry specimen breaks into pieces or crumbles with considerable pressure
High	Dry specimen cannot be broken with finger pressure, it can be broken between thumb and hard surface
Very High	Dry specimen cannot be broken between thumb and hard surface

MOISTURE CONDITION ASTM D2488

Dry	Absence of moisture, dusty, dry to the touch
Moist	Damp but no visible water
Wet	Visible free water

SOIL STRUCTURE

Slickensided	Having planes of weakness that appear slick and glossy. The degree of slickensidedness depends upon the spacing of slickensides and the easiness of breaking along these planes.
Fissured	Containing shrinkage or relief cracks, often filled with fine sand or silt; usually more or less vertical.
Pocket	Inclusion of material of different texture that is smaller than the diameter of the sample.
Parting	Inclusion less than 1/8 inch thick extending through the sample.
Seam	Inclusion 1/8 inch to 3 inches thick extending through the sample.
Layer	Inclusion greater than 3 inches thick extending through the sample.
Laminated	Soil sample composed of alternating partings or seams of different soil types.
Interlayered	Soil sample composed of alternating layers of different soil types.
Intermixed	Soil sample composed of pockets of different soil types and layered or laminated structure is not evident.
Calcareous	Having appreciable quantities of calcium material.

AVILES ENGINEERING CORP.

ASTM & TXDOT DESIGNATION FOR SOIL LABORATORY TESTS

NAME OF TEST	ASTM TEST DESIGNATION	TXDOT TEST DESIGNATION
Moisture Content	D 2216	Tex-103-E
Specific Gravity	D 854	Tex-108-E
Sieve Analysis	D 421 D 422	Tex-110-E (Part 1)
Hydrometer Analysis	D 422	Tex-110-E (Part 2)
Minus No. 200 Sieve	D 1140	Tex-111-E
Liquid Limit	D 4318	Tex-104-E
Plastic Limit	D 4318	Tex-105-E
Shrinkage Limit	D 427	Tex-107-E
Standard Proctor Compaction	D 698	Tex-114-E
Modified Proctor Compaction	D 1557	Tex-113-E
Permeability (constant head)	D 2434	-
Consolidation	D 2435	-
Direct Shear	D 3080	-
Unconfined Compression	D 2166	-
Unconsolidated-Undrained Triaxial	D 2850	Tex-118-E
Consolidated-Undrained Triaxial	D 4767	Tex-131-E
Pinhole Test	D 4647	-
California Bearing Ratio	D 1883	-
Unified Soil Classification System	D 2487	Tex-142-E

AVILES ENGINEERING CORPORATION

Consulting Engineers - Geotechnical, Construction Materials Testing, Environmental

GRAIN SIZE ANALYSIS - SIEVE

Project : Montrose Area and Midtown Drainage **Job No.:** G166-12
Location of Project: Houston, Texas **Date of Testing:** 2/8/2013

Gravel	Sand		Silt	Clay
	Coarse to Medium	Fine		

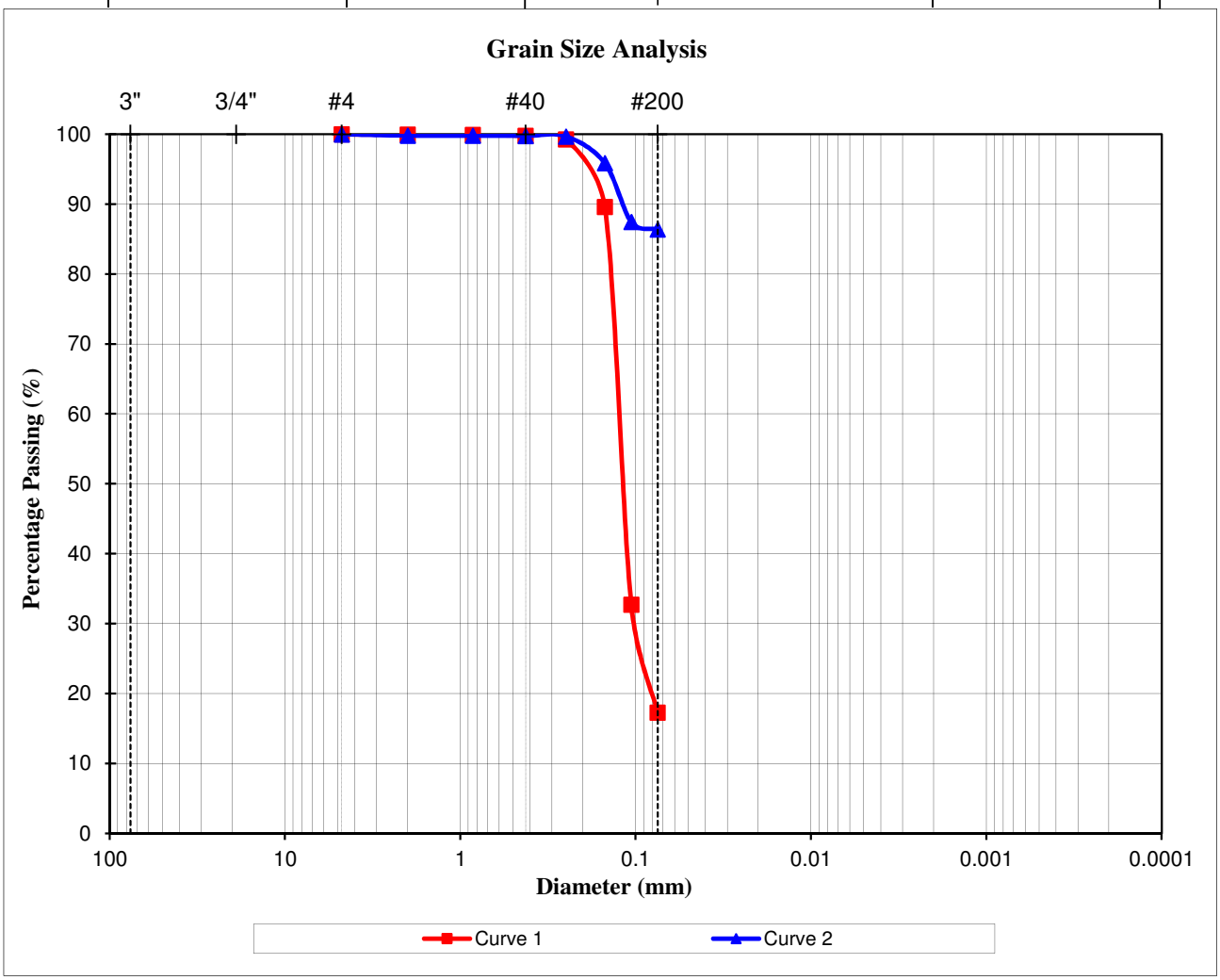

Curve	Boring	Depth (ft)	Soil Description	Cu	Cc
1	B-1	8-10	Silty Sand (SM)	N/A	N/A
2	B-1	18-20	Silt (ML)	N/A	N/A

AVILES ENGINEERING CORP.

APPENDIX B

Plate B-1	Generalized Soil Profile
Plate B-2	Piezometer Installation Details

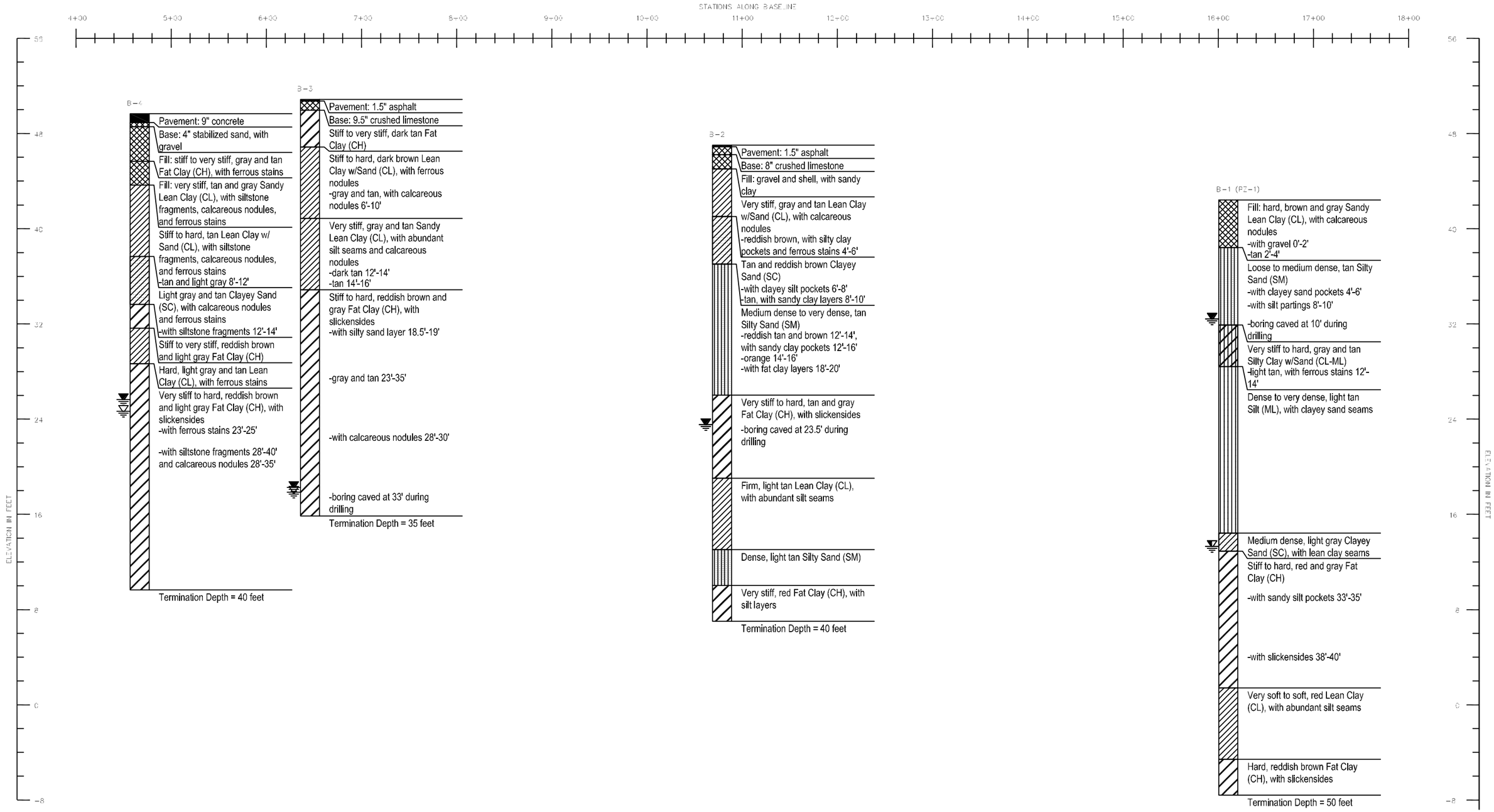

LEGEND:

- Paving
- Fill
- Low plasticity clay
- High plasticity clay
- Clayey sand
- Silty sand
- Silt
- Depth of groundwater encountered during drilling
- Depth of groundwater approx 15 min. after initial encounter
- Depth of groundwater on 01-24-2013 (piezometer)

NOTES:

1. *SOIL STRATIGRAPHY AND SECONDARY SOIL STRUCTURE (SUCH AS SEAMS, LAYERS, OR POCKETS OF SANDS, SILTS, SLICKENSIDES, AND FISSURES) THAT ARE DIFFERENT FROM WHAT WERE IDENTIFIED IN THE ACTUAL BORINGS MAY EXIST AWAY FROM THESE BORINGS.*

AVILES ENGINEERING CORPORATION

GENERALIZED SOIL PROFILE
MONTROSE AREA AND MIDTOWN
DRAINAGE AND PAVEMENT SUB-PROJECT II
COH WBS NO. M-000290-0002-3, HOUSTON, TEXAS

AEC PROJECT NO.: G166-12	DATE: 02-08-13	SOURCE DRAWING PROVIDED BY: AVILES ENGINEERING CORP.
VERTICAL SCALE: 1" = 8' HORIZONTAL SCALE: 1" = 100'	DRAFTED BY: BpJ	PLATE NO.: PLATE B-1

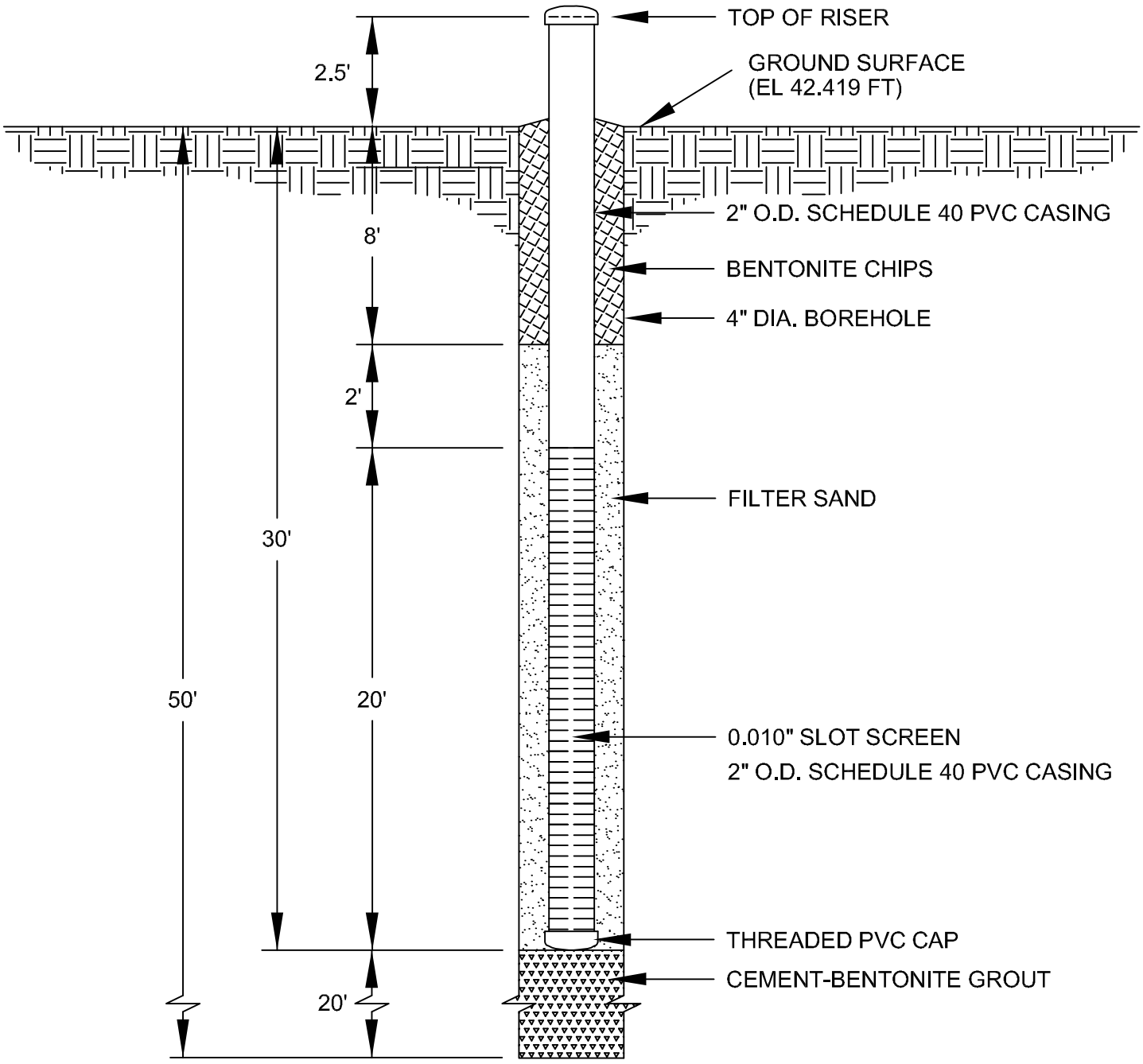

GROUNDWATER DEPTH FROM SURFACE:	DATE MEASURED:
29.1 ft.	1/24/13

AVILES ENGINEERING CORPORATION

PIEZOMETER INSTALLATION DETAILS
BORING B-1 (PZ-1)

MONTROSE AREA AND MIDTOWN
DRAINAGE AND PAVEMENT SUB-PROJECT II
HOUSTON, TEXAS

AEC PROJECT NO.:	DATE:	SOURCE DWG. BY:
G166-12	2-09-13	AVILES ENGINEERING CORP.
SCALE: N.T.S.	DRAWN BY: WIW	PLATE NO.: PLATE B-2

AVILES ENGINEERING CORP.

APPENDIX C

Plates C-1a and C-1b	Recommended Geotechnical Design Parameters
Plate C-2	Load Coefficients for Pipe Loading
Plate C-3	Live Loads on Pipe Crossing Under Roadway

.

G166-12 MONTROSE AREA AND MIDTOWN DRAINAGE AND PAVEMENT SUB-PROJECT II
SOIL PARAMETERS FOR UNDERGROUND UTILITIES

Boring	Depth (ft)	Soil Type	γ (pcf)	γ' (pcf)	OSHA Type	Short-Term					Long-Term				
						C (psf)	φ (deg)	K_a	K_0	K_p	C' (psf)	φ' (deg)	K_a	K_0	K_p
G146-11 B-11	0-4	Fill: SC-SM	89	27	C	0	30	0.33	0.50	3.00	0	30	0.33	0.50	3.00
	4-8	Medium dense SM	120	58	C	0	28	0.36	0.53	2.77	0	28	0.36	0.53	2.77
	8-12	Very loose SM	115	53	C	0	26	0.39	0.56	2.56	0	26	0.39	0.56	2.56
	12-28	Loose to medium dense SM/SP-SM	115	53	C (12-20)	0	28	0.36	0.53	2.77	0	28	0.36	0.53	2.77
	28-30	Firm CL	115	53	n/a	500	0	1.00	1.00	1.00	50	18	0.53	0.69	1.89
	30-41	Very dense SM	125	63	n/a	0	34	0.28	0.44	3.54	0	34	0.28	0.44	3.54
	41-65	Stiff to hard CH	117	55	n/a	1800	0	1.00	1.00	1.00	175	16	0.57	0.72	1.76
B-1	0-4	Fill: hard CL	129	67	C	2000	0	1.00	1.00	1.00	200	18	0.53	0.69	1.89
	4-8	Loose to medium dense SM	115	53	C	0	26	0.39	0.56	2.56	0	26	0.39	0.56	2.56
	8-10.5	Medium dense SM	120	58	C	0	30	0.33	0.50	3.00	0	30	0.33	0.50	3.00
	10.5-14	Very stiff to hard CL-ML	120	58	C*	50	21	0.47	0.64	2.12	50	21	0.47	0.64	2.12
	14-16	Dense ML	125	63	C	0	30	0.33	0.50	3.00	0	30	0.33	0.50	3.00
	16-28	Very dense ML	125	63	C (16-20)	0	34	0.28	0.44	3.54	0	34	0.28	0.44	3.54
	28-29.5	medium dense SC	120	58	n/a	0	30	0.33	0.50	3.00	0	30	0.33	0.50	3.00
	29.5-41	Stiff to hard CH	123	61	n/a	2000	0	1.00	1.00	1.00	200	16	0.57	0.72	1.76
	41-47	Very soft to soft CL, with silt	115	53	n/a	0	26	0.39	0.56	2.56	0	26	0.39	0.56	2.56
	47-50	Hard CH	130	68	n/a	3000	0	1.00	1.00	1.00	300	16	0.57	0.72	1.76
B-2	0-2	Pavement/Base	120	58	n/a	0	0	1.00	1.00	1.00	0	0	1.00	1.00	1.00
	2-6	Very stiff CL	131	69	B	2500	0	1.00	1.00	1.00	250	18	0.53	0.69	1.89
	6-10	SC	130	68	C	0	30	0.33	0.50	3.00	0	30	0.33	0.50	3.00
	10-16	Med. dense to dense SM	120	58	C	0	32	0.31	0.47	3.25	0	32	0.31	0.47	3.25
	16-21	Dense to v. dense SM	125	63	C (16-20)	0	34	0.28	0.44	3.54	0	34	0.28	0.44	3.54
	21-28	Very stiff to hard CH	124	62	n/a	3000	0	1.00	1.00	1.00	300	16	0.57	0.72	1.76
	28-34	Firm CL, with silt	120	58	n/a	0	26	0.39	0.56	2.56	0	26	0.39	0.56	2.56
	34-37	Dense SM	125	63	n/a	0	32	0.31	0.47	3.25	0	32	0.31	0.47	3.25
	37-40	Very stiff CH	120	58	n/a	3000	0	1.00	1.00	1.00	300	16	0.57	0.72	1.76

G166-12 MONTROSE AREA AND MIDTOWN DRAINAGE AND PAVEMENT SUB-PROJECT II
SOIL PARAMETERS FOR UNDERGROUND UTILITIES

Boring	Depth (ft)	Soil Type	γ (pcf)	γ' (pcf)	OSHA Type	Short-Term					Long-Term				
						C (psf)	φ (deg)	K_a	K_0	K_p	C' (psf)	φ' (deg)	K_a	K_0	K_p
B-3	0-1	Pavement/Base	120	58	n/a	0	0	1.00	1.00	1.00	0	0	1.00	1.00	1.00
	1-4	Stiff to very stiff CH	132	70	B	2000	0	1.00	1.00	1.00	200	16	0.57	0.72	1.76
	4-10	Stiff to hard CL	126	64	B	1600	0	1.00	1.00	1.00	150	18	0.53	0.69	1.89
	10-16	Very stiff CL, with silt	120	58	C	1000	0	1.00	1.00	1.00	50	22	0.45	0.63	2.20
	16-26	Stiff to hard CH	130	68	B (16-20)	1300	0	1.00	1.00	1.00	125	16	0.57	0.72	1.76
	26-35	Very stiff to hard CH	125	63	n/a	2200	0	1.00	1.00	1.00	200	16	0.57	0.72	1.76
B-4	0-1	Pavement/Base	120	58	n/a	0	0	1.00	1.00	1.00	0	0	1.00	1.00	1.00
	1-4	Fill: stiff to very stiff CH	120	58	C	1200	0	1.00	1.00	1.00	100	16	0.57	0.72	1.76
	4-6	Fill: very stiff CL	133	71	C	3000	0	1.00	1.00	1.00	300	18	0.53	0.69	1.89
	6-10	Stiff to very stiff CL	135	73	B	1500	0	1.00	1.00	1.00	150	18	0.53	0.69	1.89
	10-12	Very stiff to hard CL	135	73	B	3000	0	1.00	1.00	1.00	300	18	0.53	0.69	1.89
	12-16	SC	125	63	C	0	30	0.33	0.50	3.00	0	30	0.33	0.50	3.00
	16-18	Stiff to very stiff CH	121	59	B	1600	0	1.00	1.00	1.00	150	16	0.57	0.72	1.76
	18-21	Hard CL	125	63	B (18-20)	3000	0	1.00	1.00	1.00	300	18	0.53	0.69	1.89
	21-32	Hard CH	132	70	n/a	3000	0	1.00	1.00	1.00	300	16	0.57	0.72	1.76
	32-40	Very stiff to hard CH	125	63	n/a	2200	0	1.00	1.00	1.00	200	16	0.57	0.72	1.76

(1) γ = Unit weight for soil above water level, γ′ = Buoyant unit weight for soil below water level. E'n = Soil modulus for native soils;

(2) C = Soil ultimate cohesion for short term (upper limit of 3,600 psf for design purposes), φ = Soil friction angle for short term;

(3) C' = Soil ultimate cohesion for long term (upper limit of 300 psf for design purposes), φ' = Soil friction angle for long term;

(4) K_a = Coefficient of active earth pressure, K_0 = Coefficient of at-rest earth pressure, K_p = Coefficient of passive earth pressure;

(5) CL = Lean Clay, CH = Fat Clay, CL-ML = Silty Clay; SC = Clayey Sand; SM = Silty Sand; ML = Silt; SC-SM = Silty Clayey Sand; GC = Clayey Gravel SP-SM = Poorly Graded Sand with Silt; SP-SC = Poorly Graded Sand with Clay;

(6) OSHA Soil Types for soils in the top 20 feet below grade:

A: cohesive soils with qu = 1.5 tsf or greater (qu = Unconfined Compressive Strength of the Soil)

B: cohesive soils with qu = 0.5 tsf or greater

C: cohesive soils with qu = less than 0.5 tsf, fill materials, or granular soil

C*: submerged cohesive soils; dewatered cohesive soils can be considered OSHA Type C.

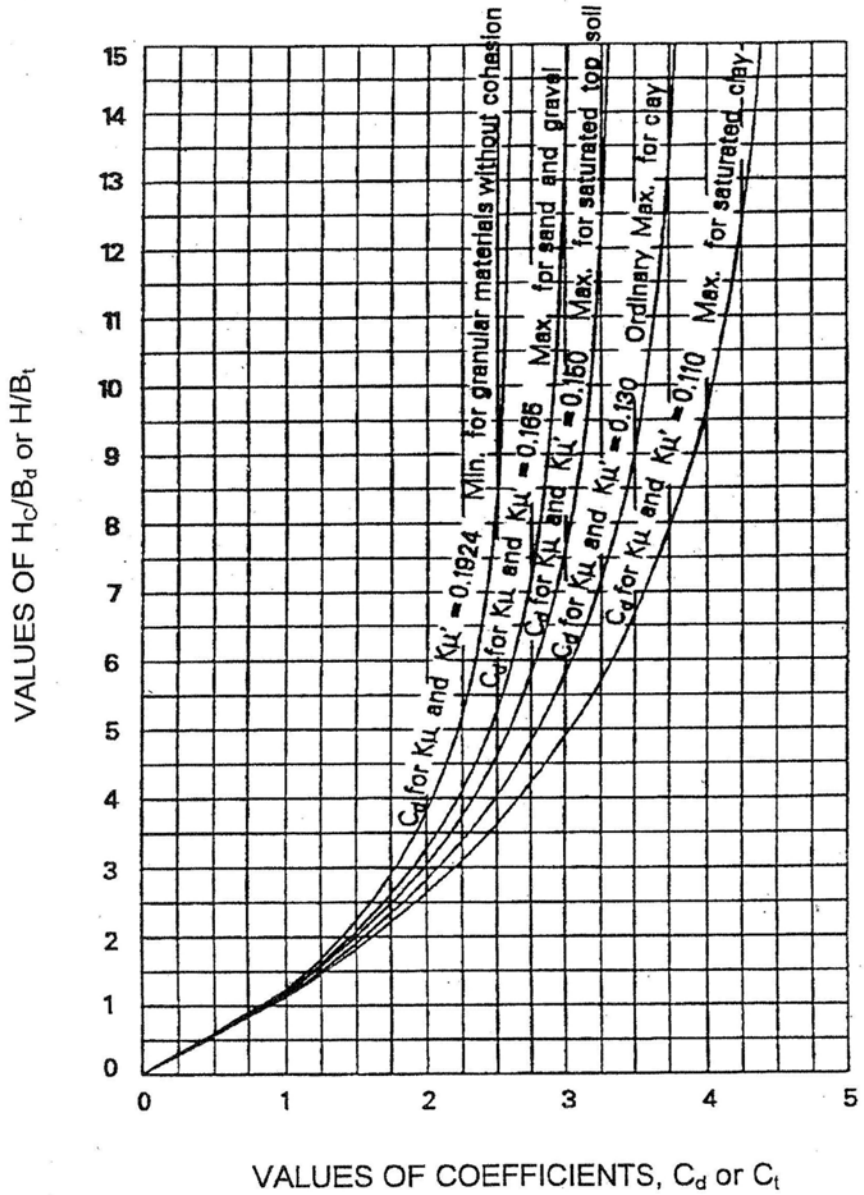

Reference: US Army Corps of Engineers Engineering Manual, EM 1110-2-2909, Oct. 31, 1997, Figure 2-5.

AVILES ENGINEERING CORP.

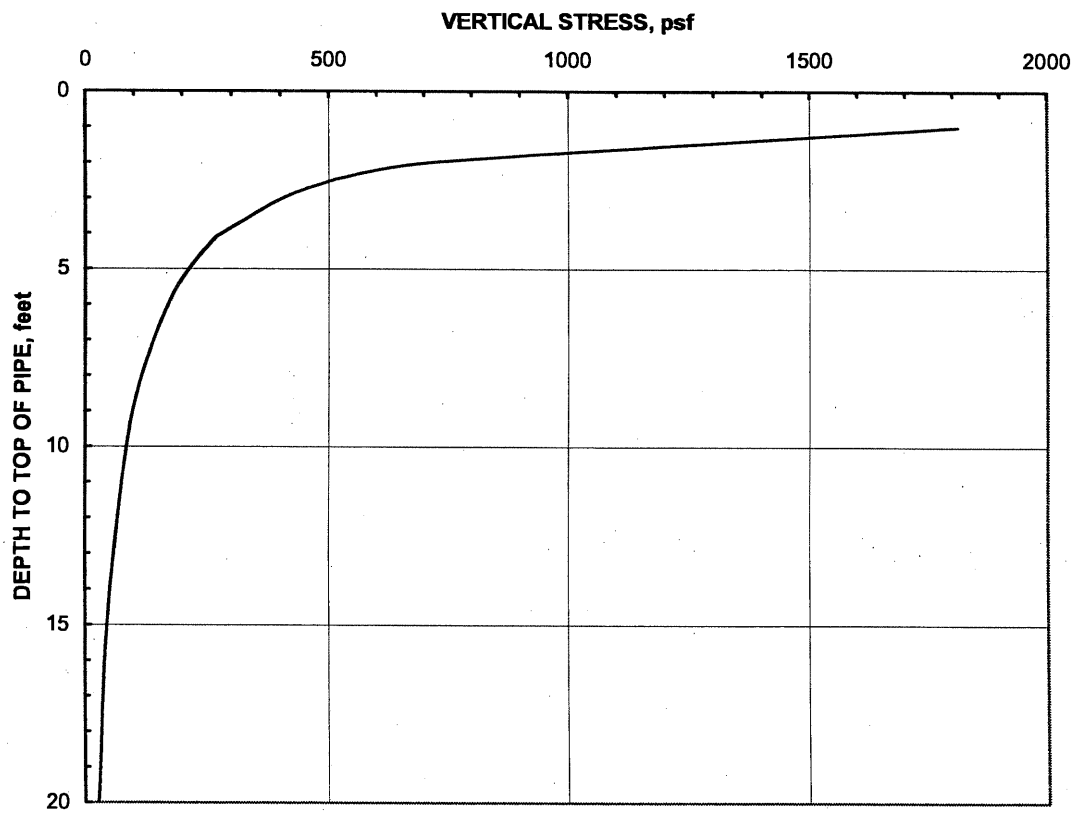

LIVE LOADS ON PIPE CROSSING UNDER ROADWAY

Note: 1. The vertical stress was estimated using AASHTO HS20 truck axle loadings on paved surfaces (Reference: ASCE 15-98, "Standard Practice for Direct Design of Buried Precast Concrete Pipe Using Standandard Installations").
2. Single truck passing.

AVILES ENGINEERING CORP.

APPENDIX D

Plate D-1	Critical Heights of Cuts in Nonfissured Clays
Plate D-2	Maximum Allowable Slopes
Plate D-3	A Combination of Bracing and Open Cuts
Plate D-4	Lateral Pressure Diagrams for Open Cuts in Cohesive Soil-Long Term Conditions
Plate D-5	Lateral Pressure Diagrams for Open Cuts in Cohesive Soil-Short Term Conditions
Plate D-6	Lateral Pressure Diagrams for Open Cuts in Sand
Plate D-7	Bottom Stability for Braced Excavation in Clay
Plate D-8	Tunnel Behavior and TBM Selection
Plate D-9	Relation between the Width of Surface Depression and Depth of Cavity for Tunnels
Plate D-10	Methods of Controlling Ground Water in Tunnel and Grouting Material Selection
Plate D-11	Buoyant Uplift Resistance for Buried Structures

AVILES ENGINEERING CORP.

Critical Heights of Cut Slopes in Nonfissured Clays

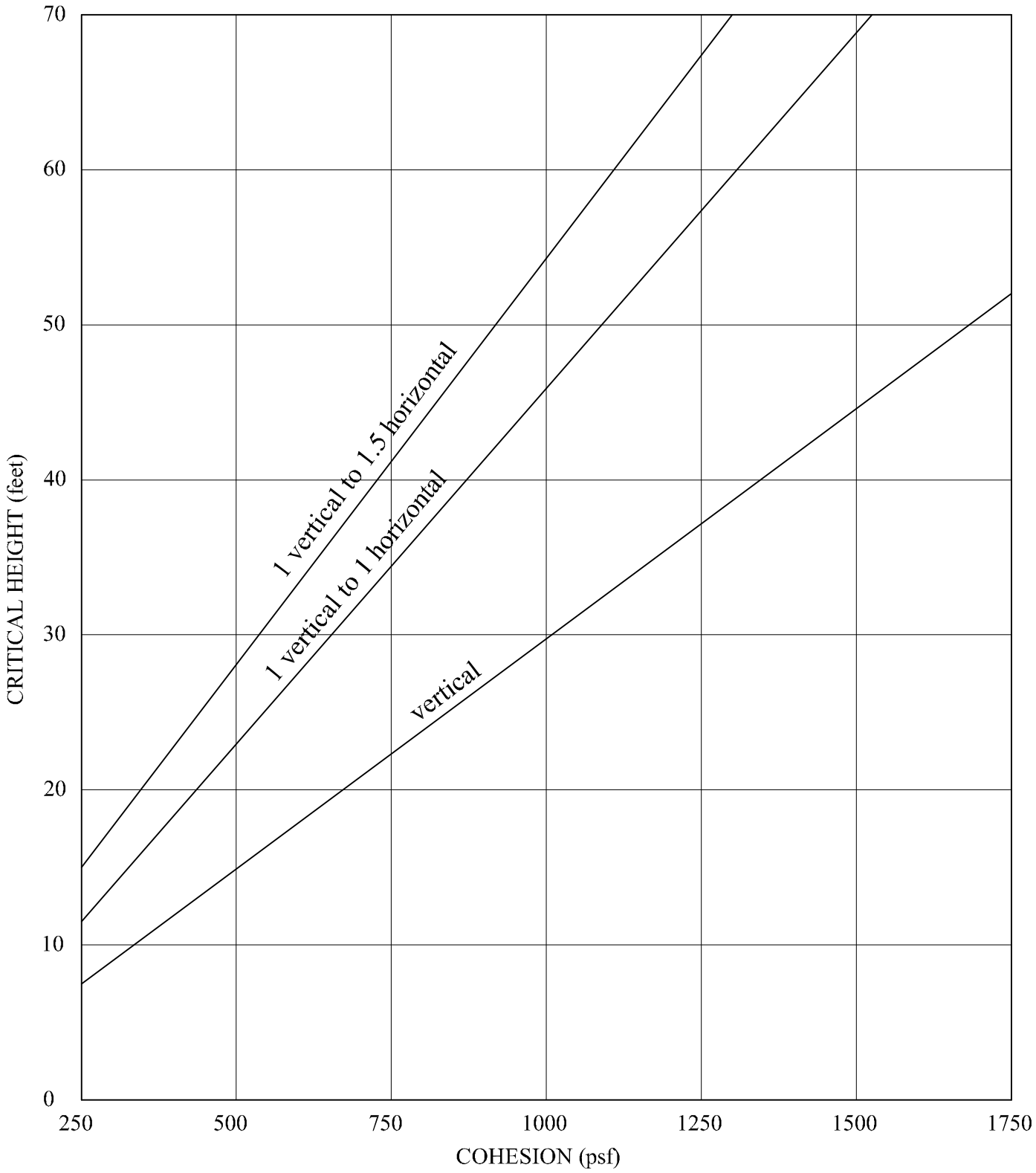

Note: The charts are calculated based on NAVFAC DM7.1, Page 7.1-319, assuming the critical circles are toe circles, and wet unit weight of soils = 125pcf.

AYLES ENGINEERING CORP.

MAXIMUM ALLOWABLE SLOPES

	SHORT TERM	LONG TERM
TYPE A SOILS	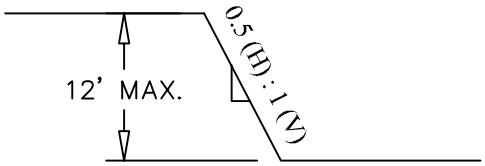	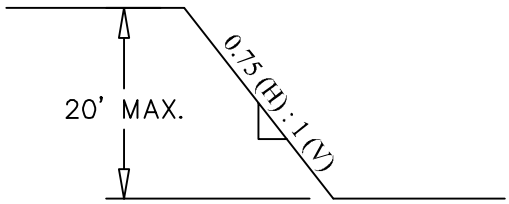
TYPE B SOILS	N/A	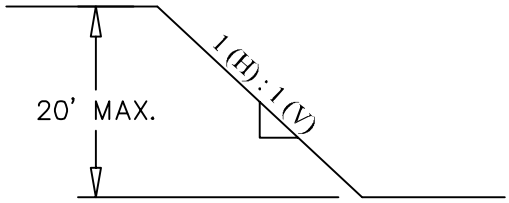
TYPE C SOILS	N/A	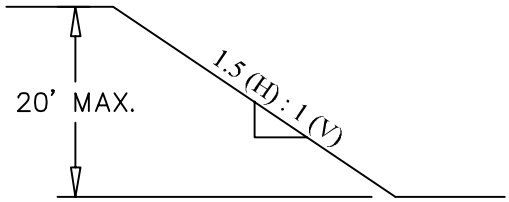

NOTES:

(1) For Type A soils, a short term maximum allowable slope of 0.5 (H) : 1 (V) is allowed in excavations that are 12 feet or less in depth; short term (24 hours or less) maximum allowable slopes for excavations greater than 12 feet in depth shall be 0.75 (H) : 1 (V).

(2) Maximum depth for above slopes is 20 feet. For slopes deeper than 20 feet, trench protection should be designed by the Contractor's professional engineer.

Reference: OSHA, Safety and Health Regulations for Construction, 1926 Subpart P.

AYLES ENGINEERING CORP.

A COMBINATION OF BRACING AND OPEN CUTS

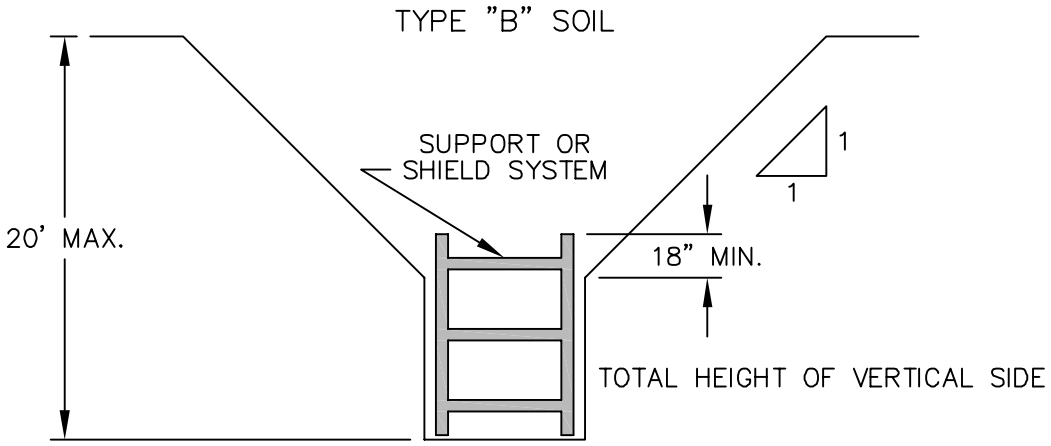

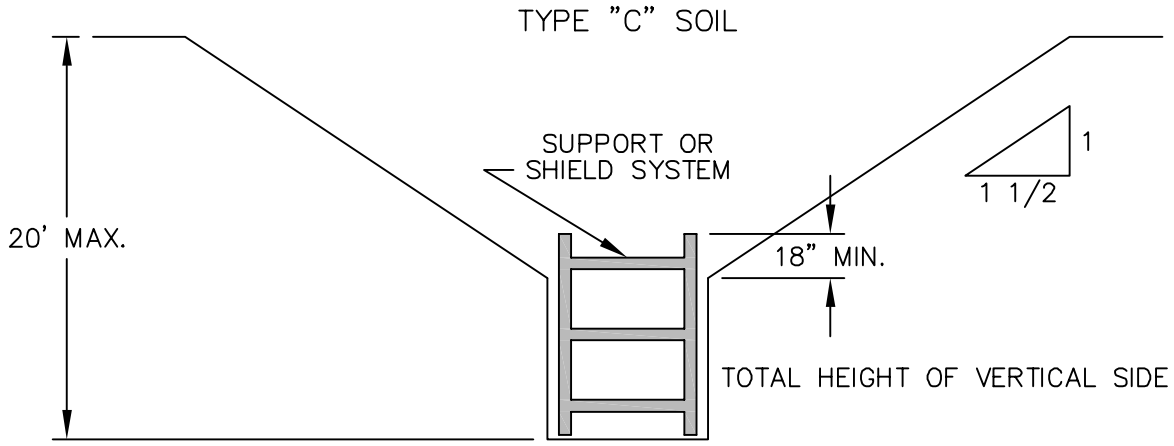

Reference: OSHA, Safety and Health Regulations for Construction, 1926 Subpart P.

AYLES ENGINEERING CORP.

LATERAL PRESSURE DIAGRAMS
FOR OPEN CUTS IN COHESIVE SOIL - LONG TERM CONDITIONS

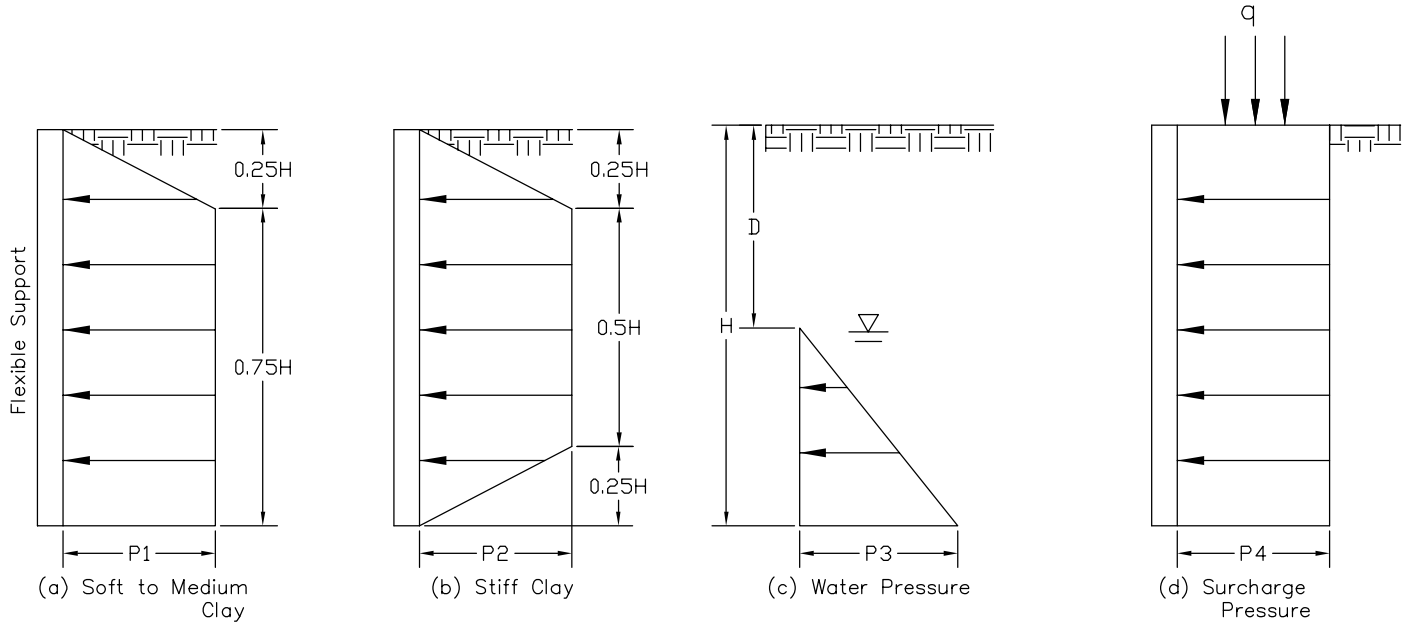

Empirical Pressure Distributions

Where:
H = Total excavation depth, feet
D = Depth to water table, feet
P1 = Lateral earth pressure = γH-4C, psf
P2 = Lateral earth pressure = 0.4γH, psf
P3 = Water pressure = γ_w (H-D), psf
P4 = Lateral earth pressure caused by surcharge = qK_a, psf
γ = Effective unit weight of soil, pcf
γ_w = Unit weight of water, pcf
C = Drained shear strength or cohesion, psf
K_a = Coefficient of active earth pressure

Notes:
1. All pressures are additive.
2. No safety factors are included.
3. For use only during long term construction.
4. If γH/C < 4, use section (b),
   If 4 < γH/C < 6, use larger of section (a) or (b),
   If γH/C > 6, use section (a).

Reference: Peck, R.B. (1969), "Deep Excavation and Tunneling in soft Ground", 7th ICSMFE, State of art volume, pp. 225-290.

AVILES ENGINEERING CORP.

LATERAL PRESSURE DIAGRAMS
FOR OPEN CUTS IN COHESIVE SOIL - SHORT TERM CONDITIONS

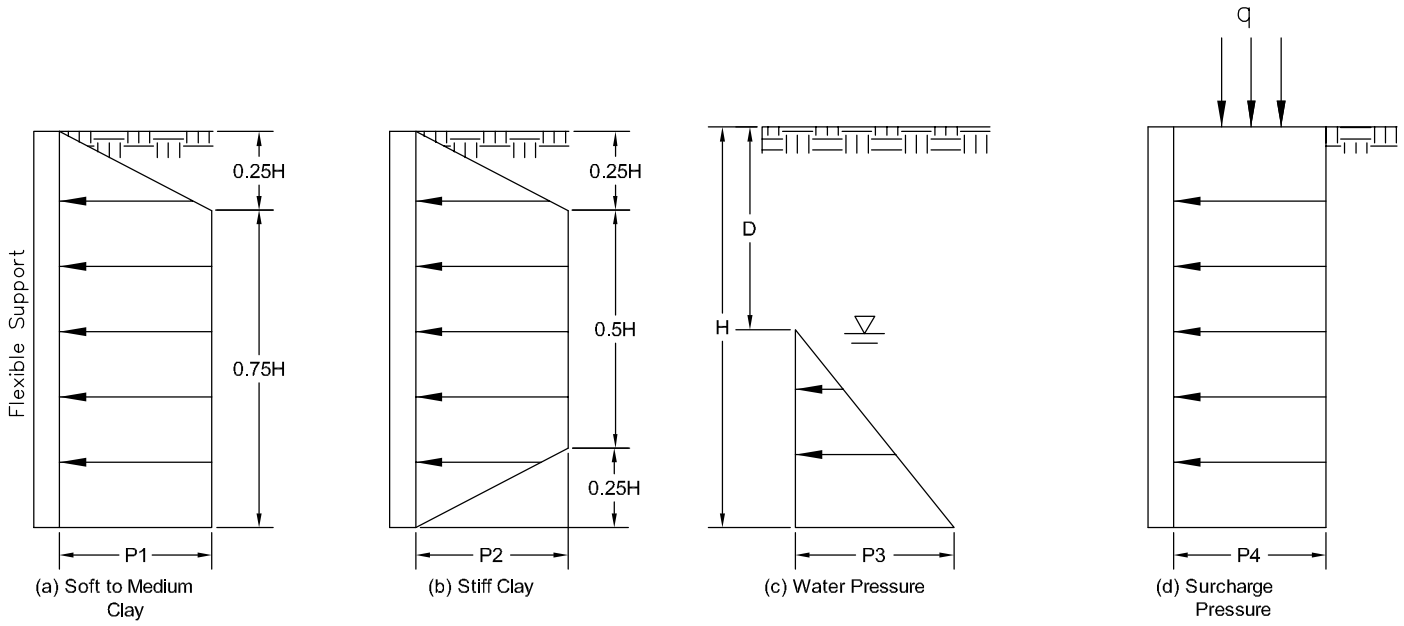

Empirical Pressure Distributions

Where:
H = Total excavation depth, feet
D = Depth to water table, feet
P1 = Lateral earth pressure = $\gamma H - 4S_u$, psf
P2 = Lateral earth pressure = $0.2\gamma H$, psf
P3 = Water pressure = γ_w (H-D), psf
P4 = Lateral earth pressure caused by surcharge = qK_a, psf
γ = Effective unit weight of soil, pcf
γ_w = Unit weight of water, pcf
S_u = Undrained shear strength = $q_u/2$, psf
q_u = Unconfined compressive strength, psf
K_a = Coefficient of active earth pressure

Notes:
1. All pressures are additive.
2. No safety factors are included.
3. For use only during short term construction.
4. If $\gamma H/S_u < 4$, use section (b),
   If $4 < \gamma H/S_u < 6$, use larger of section (a) or (b),
   If $\gamma H/S_u > 6$, use section (a).

Reference: Peck, R.B. (1969), "Deep Excavation and Tunneling in soft Ground", 7th ICSMFE, State of art volume, pp. 225-290.

AYLES ENGINEERING CORP.

LATERAL PRESSURE DIAGRAMS
FOR OPEN CUTS IN SAND

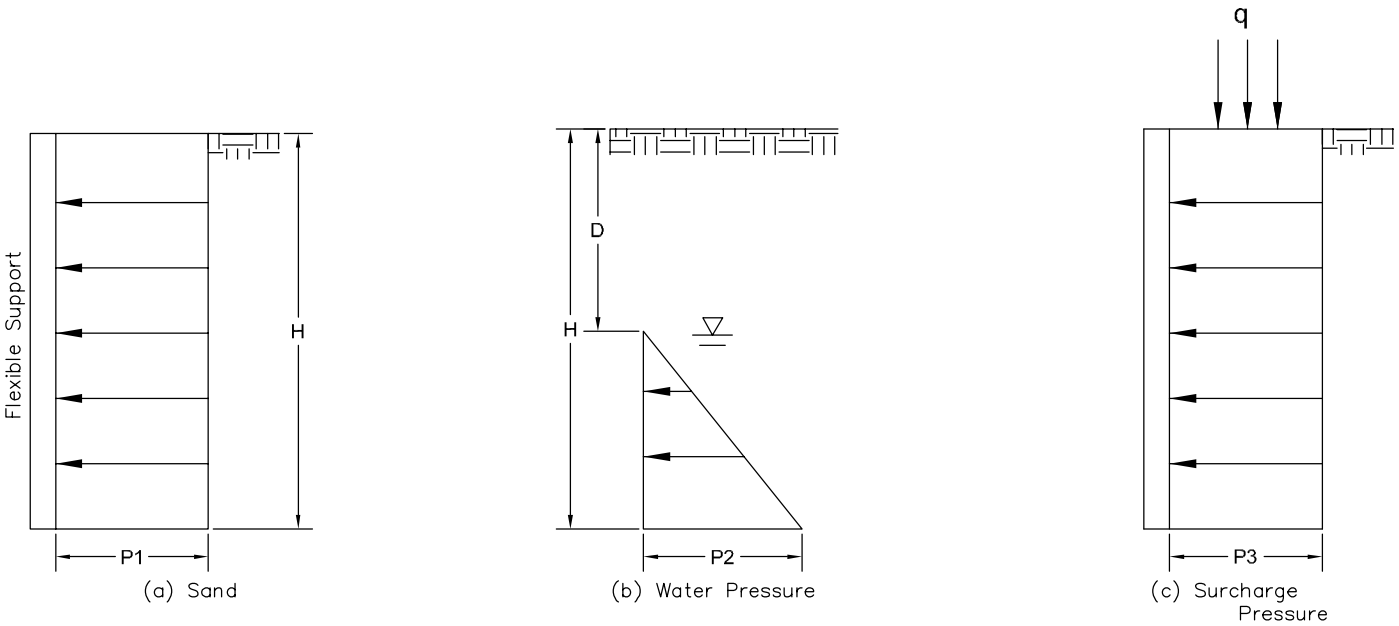

Empirical Pressure Distributions

Where:
H = Total excavation depth, feet
D = Depth to water table, feet
P1 = Lateral earth pressure = $0.65*\gamma HK_a$, psf
P2 = Water pressure = γ_w (H-D), psf
P3 = Lateral earth pressure caused by surcharge = qK_a, psf
γ = Effective unit weight of soil, pcf
γ_w = Unit weight of water, pcf
K_a = Coefficient of active earth pressure = $(1-\sin\varphi)/(1+\sin\varphi)$
φ = Drained friction angle

Notes:
1. All pressures are additive.
2. No safety factors are included.

Reference: Peck, R.B. (1969), "Deep Excavation and Tunneling in soft Ground", 7th ICSMFE, State of art volume, pp. 225-290.

BOTTOM STABILITY FOR BRACED EXCAVATION IN CLAY

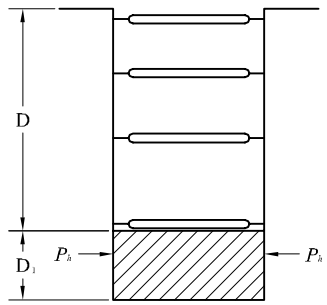

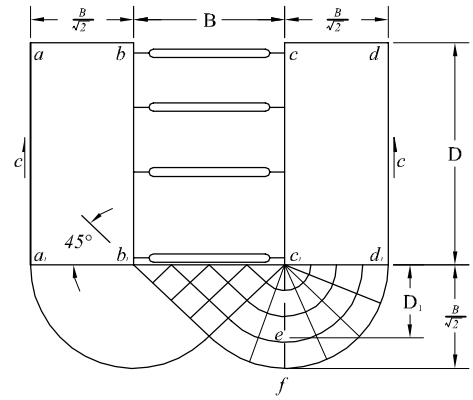

Factor of Safety against bottom of heave,

$$F.S = \frac{NcC}{(\gamma D + q)}$$

where, Nc = Coefficient depending on the dimension of the excavation (see Figure at the bottom)
C = Undrained shear strength of soil in zone immediately around the bottom of the excavation,
γ = Unit weight of soil,
D = Depth of excavation,
q = Surface surcharge.

If F.S < 1.5, sheeting should be extended further down to achieve stability

$$\text{Depth of Buried Length, } (D_1) = \frac{1.5(\gamma D + q) - NcC}{(C/B) - 0.5\gamma} \; ; D_1 \geq 5 \text{ ft.}$$

Pressure on buried length, P_h:

For $D_1 < 0.47B$; $P_h = 1.5\, D_1(\gamma D - 1.4\, CD/B - 3.14C)$

For $D_1 > 0.47B$; $P_h = 0.7\, (\gamma DB - 1.4\, CD - 3.14CB)$

where; B = width of excavation

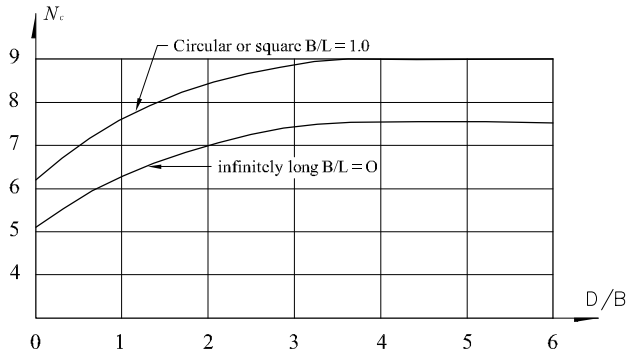

N_c rectangular = $(0.84 + 0.16B/L)N_c$ square

Reference: Bjerrum, L. and Eide, O., Stability of Strutted Excavations in Clay, Geotechnique, 6, 32-47 (1956).

AVILES ENGINEERING CORP.

Tunnel Behavior: Sands and Gravels
(Terzaghi, 1977)

Designation	Degree of Compactness	Tunnel Behavior	
		Above Water Table	Below Water Table
Very Fine Clean Sand	Loose, $N \leq 10$	Cohesive Running	Flowing
	Dense, $N > 30$	Fast Raveling	Flowing
Fine Sand with Clay Binder	Loose, $N \leq 10$	Rapid Raveling	Flowing
	Dense, $N > 30$	Firm or Slowly Raveling	Slowly Raveling
Sand or Sandy Gravel with Clay Binder	Loose, $N < 10$	Rapid Raveling	Rapidly Raveling or Flowing
	Dense, $N > 30$	Firm	Firm/slow Raveling
Sandy Gravel and Medium to Coarse Sand		Running Ground. Uniform ($C_u < 3$) and loose ($N < 10$) materials with round grains run much more freely than well graded ($C_u > 6$) and dense ($N > 30$) ones with angular grains.	Flowing Conditions combined with extremely heavy discharge of water.

TBM FAMILY OF MACHINES
(From Kessler & Moore,)

Machine Type	Typical Machine Diameters	Ground Condition TBM is Best Suited For
Pipe Jacking Machines	Up to approx. 10 – 13 ft (3 - 4m)	Any ground
Small Bore Unit (SBU)	Up to 6.6 ft (2m)	Any ground
Shielded TBMs	6.6 – 46 ft (2 to 14m) plus	Soft ground above the water table
Mix Face TBMs	6.6 – 46 ft (2 to 14m) plus	Mixed ground above the water table
Slurry TBMs	6.6 – 46 ft (2 to 14m) plus	Coarse-grained soft ground below the water table
EPB TBMs	6.6 – 46 ft (2 to 14m) plus	Fine-grained soft ground below the water table
Hard Rock TBMs	6.6 – 46 ft (2 to 14m) plus	Hard rock
Reamer TBMs	Various	Hard rock
Multi-head TBMs	Various	Various

Reference: Dots Oyenuga (2004), "FHWA Road Tunnel Design Guidelines", Pages 8 and 10, published by U.S. Department of Transportation Federal Highway Administration, Report No. FHWA-IF-05-023, Washington DC.

Relation between the Width of the Surface Depression (i/a) and the Depth of the Cavity (z/a) for Tunnels

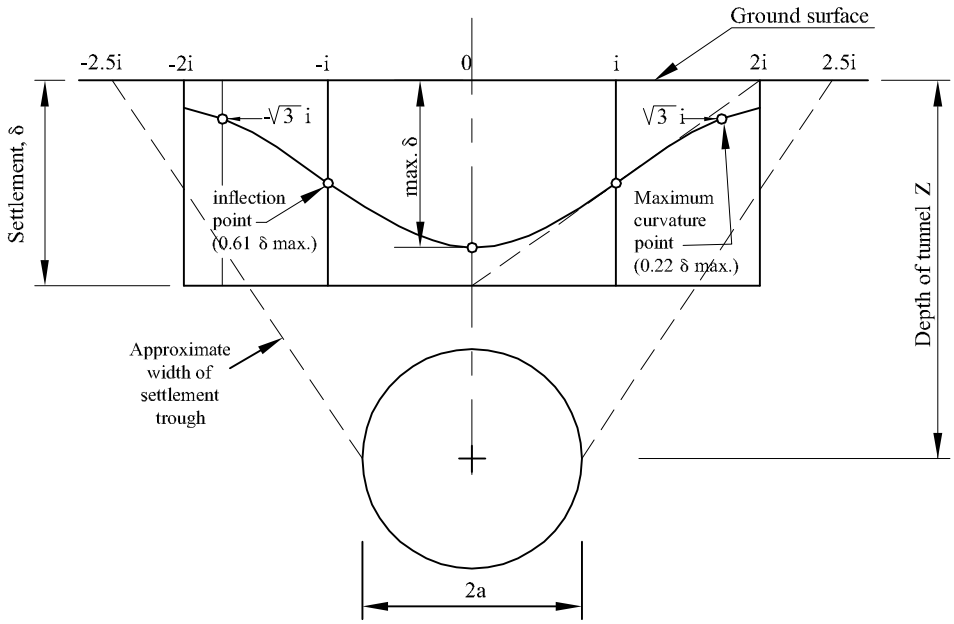

Volume of depression = 2.5i δ max.

(a)

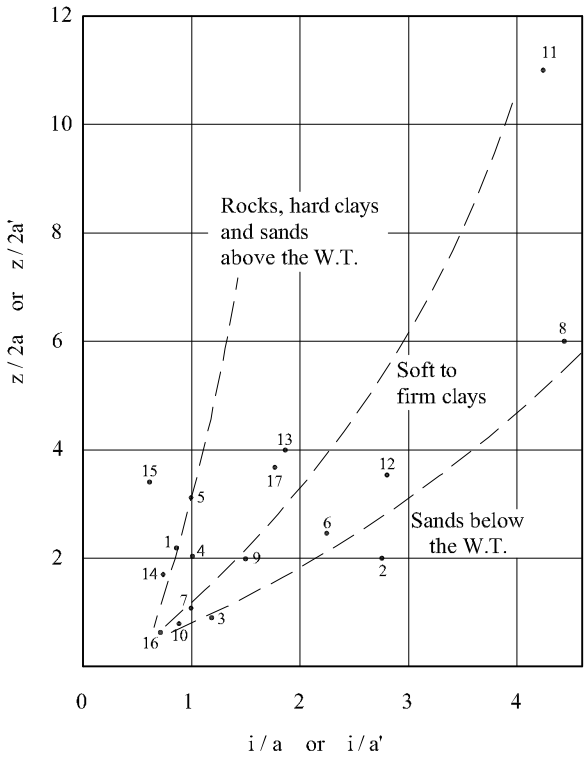

(b)

Reference: Peck, R. B. (1969) "Deep Excavations and Tunneling in Soft Ground," Proceedings, Seventh International Conference on Soil Mechanics and Foundation Engineering, Mexico City, State of the Art Volume, pp. 225-290.

AVILES ENGINEERING CORP.

Methods of Controlling Groundwater
(after Karol, 1990)

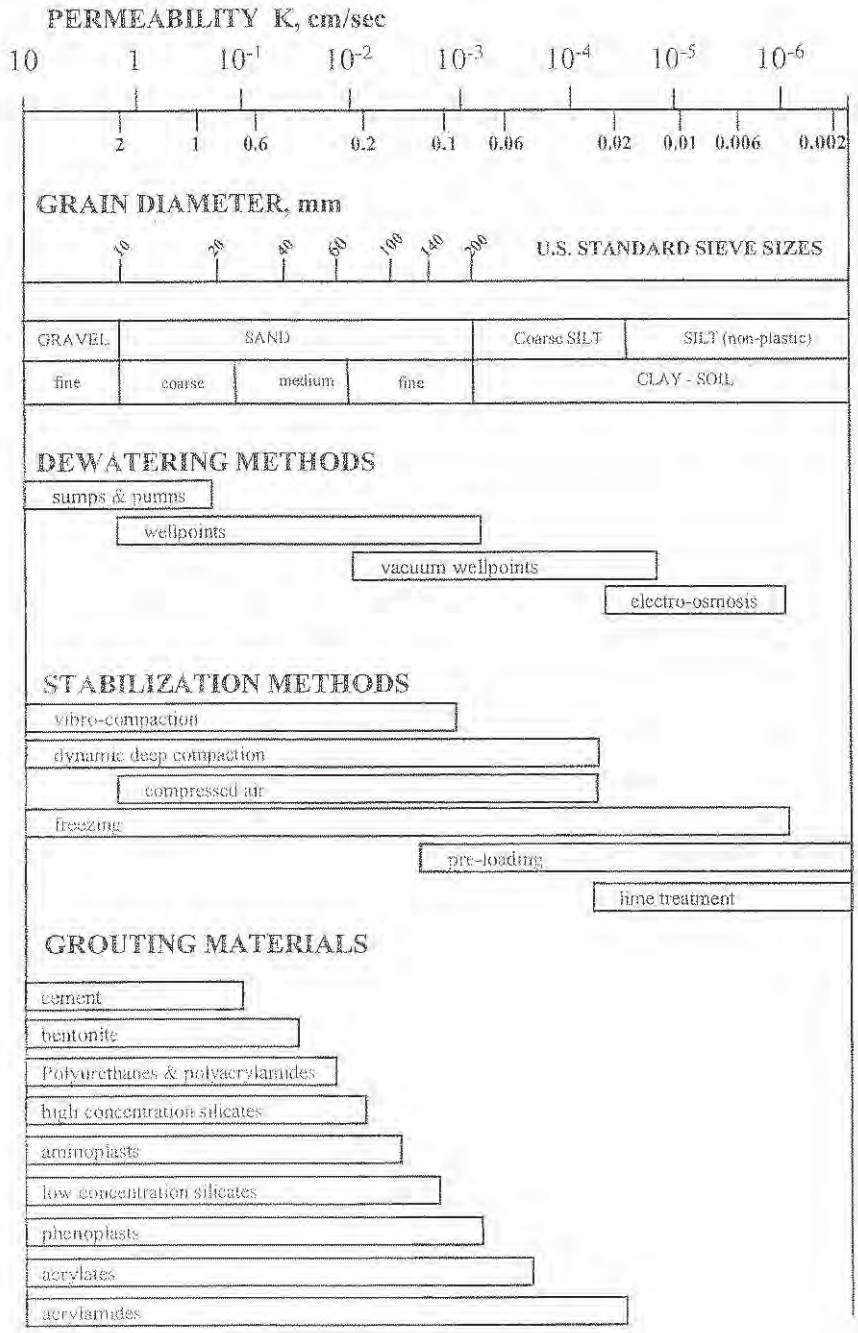

Note: 1 cm/sec = 0.4 in/sec; 1 mm = 0.04 in.

Reference: Dots Oyenuga (2004), "FHWA Road Tunnel Design Guidelines", Page 9, published by U.S. Department of Transportation Federal Highway Administration, Report No. FHWA-IF-05-023, Washington DC.

AYLES ENGINEERING CORP.

BUOYANT UPLIFT RESISTANCE FOR BURIED STRUCTURES

(a) WALL / SOIL FRICTION PLUS STRUCTURAL WEIGHT

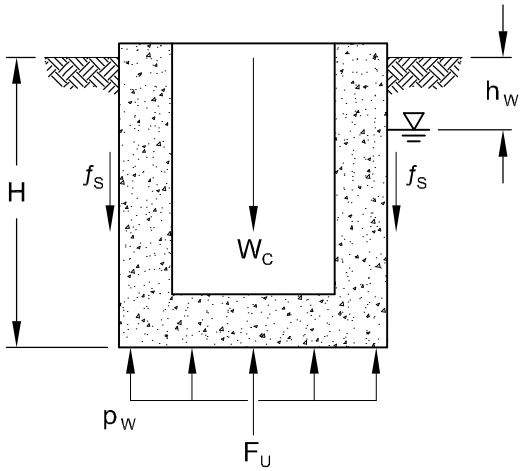

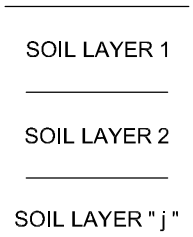

(b) SOIL WEIGHT ABOVE BASE EXTENSION

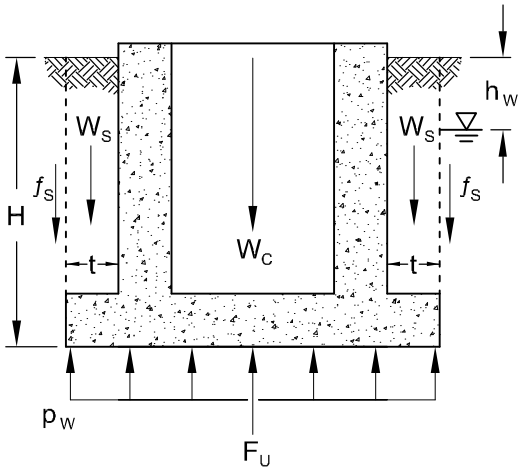

cohesive soils: $f_{S_j} = \alpha\ c_j \leq 3{,}000$ psf

cohesionless soils: $f_{S_j} = 0.75\ K_S\ \sigma_{V_j} \tan\delta_j$

$$Q_S = P_S \sum f_{S_j}\ h_j$$

$$\frac{W_C}{S_{f_a}} + \frac{Q_S}{S_{f_b}} \geq F_U$$

cohesive soils: $f_{S_j} = c_j \leq 3{,}000$ psf

cohesionless soils: $f_{S_j} = 0.75\ K_S\ \sigma_{V_j} \tan\Phi_j$

$$Q_S = P_S \sum f_{S_j}\ h_j$$

$$\frac{W_C}{S_{f_a}} + \frac{Q_S}{S_{f_b}} + \frac{W_S}{S_{f_c}} \geq F_U$$

Where:

A_B = area of base, sq. ft.
H = buried height of structure, ft.
h_W = depth to water table, ft.
p_W = $\gamma_W (H - h_W)$, unit hydrostatic uplift, psf.
γ_W = 62.4 pcf, unit weight of water
F_U = $p_W A_B$, hydrostatic uplift force, lbs.
f_{S_j} = unit frictional resistance of soil layer " j ", psf.
c_j = undrained cohesion of soil layer " j ", psf.
α = 0.55, cohesion factor between soil and structure wall
σ_{V_j} = effective overburden pressure at midpoint of soil layer " j ", psf.
δ_j = 0.75 Φ_j, friction angle between soil layer " j " and concrete wall, degrees
Φ_j = internal angle of friction of soil layer " j ", degrees
K_S = 0.4, coefficient of lateral pressure
h_j = thickness of soil layer " j ", ft.
j = 1, 2, ...
P_S = perimeter of structure base, ft.
Q_S = ultimate skin friction, lbs.
W_C = weight of structure, lbs.
W_S = weight of backfill above base extension, lbs.
S_{f_a} = 1.1, factor of safety for dead weight of structure
S_{f_b} = 3.0, factor of safety for soil / structure friction
S_{f_c} = 1.5, factor of safety for soil weight above base extension
t = width of base extension, ft.

NOTE: neglect f_S in upper 5 feet for expansive clay with a plasticity index > 20.

Reference:

1) *American Concrete Pipe Association, (1996), Manhole Floatation*
2) *O'Neill, M.W., and Reese, L.C., (1999), "Drilled Shafts: Construction Procedures and Design Methods", FHWA-IF-99-025*