GEOTECHNICAL INVESTIGATION

HOLCOMBE DRAINAGE AND PAVING IMPROVEMENTS
WBS NO. M-420126-0076-3
HOUSTON, TEXAS

Reported to:
AECOM
Houston, Texas

by

Aviles Engineering Corporation
5790 Windfern
Houston, Texas 77041
713-895-7645

REPORT NO. G154-14

December 2014

AVILES
ENGINEERING CORP.

5790 Windfern Road
Houston, Texas 77041
Tel: (713)-895-7645
Fax: (713)-895-7943

December 10, 2014

Ms. Kristin L. Landry, P.E.
Project Manager
AECOM
5444 Westheimer Road, Suite 200
Houston, Texas 77056

Reference: **Geotechnical Investigation**
Holcombe Drainage and Paving Improvements
Houston, Texas
WBS No.: M-420126-0076-3
AEC Report No. G154-14

Dear Ms. Landry,

Aviles Engineering Corporation (AEC) is pleased to present this report of the results of our draft geotechnical investigation for the above referenced project. Notice to proceed for the geotechnical investigation was provided on September 18, 2014 by Ms. Kristin L. Landry, P.E., of AECOM. The investigation was performed in accordance with the sub-consultant agreement between AEC and AECOM, based on AECs proposal G2014-03-03R, dated March 6, 2014.

AEC appreciates the opportunity to be of service to you. Please call us if you have any questions or comments concerning this report or when we can be of further assistance.

Respectfully submitted,
Aviles Engineering Corporation
(TBPE Firm Registration No. F-42)

STATE OF TEXAS
SHOU TING HU
84686
LICENSED
PROFESSIONAL ENGINEER
12/10/2014

Chun Ho Lee, M.S.C.E., E.I.T.
Staff Engineer

Shou Ting Hu, M.S.C.E., P.E.
Principal Engineer

Reports Submitted: 4 AECOM
1 File (electronic)

Z:\ENGINEERING\REPORTS\2014\154-14 HOLCOMBE & GRAND DRAINAGE IMPROVEMENTS - AECOM (CHUN HO)\G154-14 FINAL.DOCX

AVILES ENGINEERING CORP.

TABLE OF CONTENTS

EXECUTIVE SUMMARY i
1.0 INTRODUCTION 1
1.1 General 1
1.2 Purpose and Scope 1
2.0 SUBSURFACE EXPLORATION 2
2.1 Soil Borings 2
3.0 LABORATORY TESTING PROGRAM 3
4.0 SITE CONDITIONS 4
4.1 Subsurface Conditions 4
4.2 Hazardous Materials 6
4.3 Geologic Conditions 6
4.4 Subsurface Variations 7
5.0 GEOTECHNICAL ENGINEERING RECOMMENDATIONS 7
5.1 Installation of Underground Utilities by Open-Cut Method 8
5.1.1 Geotechnical Parameters for Underground Utilities 8
5.1.2 Loadings on Pipes 8
5.1.3 Trench Stability 9
5.1.4 Bedding and Backfill 12
5.2 Manholes and Junction Boxes 12
5.2.1 Allowable Bearing Capacity 13
5.2.2 Uplift Resistance 13
5.2.3 Lateral Earth Pressures 13
5.2.4 Manhole Backfill Material 14
5.3 Pavement Reconstruction 14
5.3.1 Estimation of Traffic Loading 15
5.3.2 Rigid Pavement for Holcombe Boulevard 17
5.3.3 Asphalt Pavement for Grand Boulevard 19
5.3.4 Pavement Subgrade Preparation 20
6.0 CONSTRUCTION CONSIDERATIONS 21
6.1 Site Preparation 21
6.2 Groundwater Control 21
6.3 Construction Monitoring 23
6.4 Monitoring of Existing Structures 23
7.0 LIMITATIONS 23

AVILES ENGINEERING CORP.

APPENDICES

APPENDIX A

Plate A-1	Vicinity Map
Plate A-2	Boring Location Plan
Plates A-3 thru A-9	Boring Logs
Plate A-10	Key to Symbols
Plate A-11	Classification of Soils for Engineering Purposes
Plate A-12	Terms Used on Boring Logs
Plate A-13	ASTM & TXDOT Designation for Soil Laboratory Tests
Plates A-14 thru A-16	Summary of Lab Data

APPENDIX B

Plate B-1	Generalized Soil Profile
Plate B-2	Piezometer Details

APPENDIX C

Plates C-1a & C-1b	Recommended Geotechnical Design Parameters
Plate C-2	Load Coefficients for Pipe Loading
Plate C-3	Live Loads on Pipe Crossing Under Roadway

APPENDIX D

Plate D-1	Critical Heights of Cuts in Nonfissured Clays
Plate D-2	Maximum Allowable Slopes
Plate D-3	A Combination of Bracing and Open Cuts
Plate D-4	Lateral Pressure Diagrams for Open Cuts in Cohesive Soil-Long Term Conditions
Plate D-5	Lateral Pressure Diagrams for Open Cuts in Cohesive Soil-Short Term Conditions
Plate D-6	Lateral Pressure Diagrams for Open Cuts in Sand
Plate D-7	Bottom Stability for Braced Excavation in Clay
Plate D-8	Buoyant Uplift Resistance for Buried Structures

APPENDIX E Piezometer Installation and Plugging Reports

EXECUTIVE SUMMARY

The report submitted herein presents the results of Aviles Engineering Corporation's (AEC) geotechnical investigation for the City of Houston's (COH) Holcombe and Grand Drainage Improvements in Houston, Texas. Based on the information and the profile drawings provided by AECOM to AEC on October 31, 2014, AEC understands that the street reconstruction consists of: (i) replacement of approximately 1,600 linear feet of a 42- to 48-inch storm sewer line along Holcombe Boulevard between Almeda Road and Grand Boulevard; the maximum invert depth will be 14 feet below existing grade, while the storm sewer manhole foundations will be founded at a maximum depth of 22 feet below existing grade. The underground storm sewer will be installed with open cut method; and (ii) replacement of existing roadway pavement with new pavement which includes: (a) full width reconstruction for Holcombe Blvd from 180 feet east to 600 feet west of Grand Blvd, whereas north lane only from 600 feet west of Grand Blvd to Almeda Road; and (b) full width reconstruction for Grand Blvd from 230 feet south to approximately 460 feet north of Holcombe Blvd. AEC understands that some areas of the existing roadway will be raised to alleviate drainage problems; however, the detail locations are not available to AEC at this time.

1. Subsurface Soil Conditions: Based on Borings B-1 through B-7, subsurface soil conditions within the alignment generally consist of firm to hard fat clay/lean clay (CH/CL) to the boring termination depths of 10 to 40 feet. Approximately 2 feet of silt (ML) was encountered at a depth of 10 feet in Boring B-1. Approximately 2 and 4 feet of silty sand/clayey sand (SM/SC) was encountered at a depth of 28 and 26 feet in Borings B-4 and B-6, respectively.

2. Subsurface Soil Properties: The subsurface clayey soils encountered in the borings have high to very high plasticity, with liquid limits (LL) ranging from 36 to 101, and plasticity indices (PI) ranging from 23 to 69. The cohesive soils encountered are classified as "CL" and "CH" type soils and granular soils are classified as "ML", "SM", and "SC" type soils in accordance with ASTM D 2487. Slickensides were encountered in clayey soils.

3. Groundwater Conditions: Groundwater was encountered at a depth of 25 feet below grade during drilling in Boring B-2 and subsequently rose to a depth of 19 feet approximately 15 minutes after the initial encounter. Groundwater was not encountered in the remaining borings during drilling or after completion of the drilling. A summary of groundwater depths in our borings are presented in Table 3 in this report.

4. Hazardous Materials: No signs of visual staining or odors were encountered during field drilling or during processing of the soil samples in the laboratory.

5. Geologic Hazards: Fault study is beyond AEC's scope of services.

6. Design parameters and recommendations for installation of underground utilities by open cut method are presented in Section 5.1 of this report.

7. Design parameters and recommendations for installation of manholes and junction boxes by open cut method are presented in Section 5.2 of this report.

8. Design parameters and recommendations for pavement are presented in Section 5.3 of this report.

This Executive Summary is intended as a summary of the investigation and should not be used without the full text of this report.

.

ENGINEERING CORP.

GEOTECHNICAL INVESTIGATION

HOLCOMBE DRAINAGE AND PAVING IMPROVEMENTS
WBS NO. M-420126-0076-3
HOUSTON, TEXAS

1.0 INTRODUCTION

1.1 General

The report submitted herein presents the results of Aviles Engineering Corporation's (AEC) geotechnical investigation for the City of Houston's (COH) Holcombe Drainage and Paving Improvements in Houston, Texas (Houston/Harris County Key Map Nos.: 533F and K). A vicinity map is presented on Plate A-1, in Appendix A. Based on the information and the profile drawings provided by AECOM to AEC on October 31, 2014, AEC understands that the street reconstruction consists of: (i) replacement of approximately 1,600 linear feet of a 42- to 48-inch storm sewer line along Holcombe Boulevard between Almeda Road and Grand Boulevard; the maximum invert depth will be approximately 14 feet below existing grade, while the storm sewer manhole foundations will be founded at a maximum depth of 22 feet below existing grade. The underground storm sewer will be installed with open cut method; and (ii) replacement of existing roadway pavement with new pavement which includes: (a) full width reconstruction for Holcombe Blvd from 180 feet east to 600 feet west of Grand Blvd, whereas north lane only from 600 feet west of Grand Blvd to Almeda Road; and (b) full width reconstruction for Grand Blvd from 230 feet south to approximately 460 feet north of Holcombe Blvd. AEC understands that some areas of the existing roadway will be raised to alleviate drainage problems; however, the detail locations are not available to AEC at this time.

1.2 Purpose and Scope

The purpose of this geotechnical investigation is to evaluate the subsurface soil and ground water conditions along the alignment and develop geotechnical engineering recommendations for design and construction of underground storm sewer line by open cut method, as well as street reconstruction, including pavement thickness and subgrade preparation. The scope of this geotechnical investigation is summarized below:

1. Drilling and sampling 7 geotechnical borings to depths ranging from 10 to 40 feet below existing pavement;
2. Soil laboratory testing on selected soil samples;
3. Engineering analyses and recommendations for the installation of underground storm sewer and manholes by open cut method, including loadings on pipes, bedding, lateral earth pressure parameters, trench stability, and backfill requirements;
4. Engineering analyses and recommendations for the design of pavement, including pavement thicknesses and subgrade preparation; and
5. Construction recommendations for installation of underground utilities and manholes by open cut method, as well as pavements.

2.0 SUBSURFACE EXPLORATION

2.1 Soil Borings

Based on the information provided by AECOM to AEC on September 24, 2014, maximum invert depth of the proposed storm sewer was estimated to be over 20 feet deep along Holcombe Boulevard. Boring spacing and depth were selected in accordance with Chapter 11 of the latest edition of the COH Engineering Design Manual and preliminary maximum invert depths provided. In general, borings are spaced at an interval of approximately 500 feet along the alignment.

The subsurface exploration consisted of drilling and sampling a total of 7 borings to depths ranging from 10 to 40 feet below existing pavements. Borings B-1 through B-4 were drilled along Holcombe Boulevard while Borings B-5 through B-7 were drilled along Grand Boulevard. Total drilling footage is 195 feet. Approximate boring locations are shown on the Boring Location Plan on Plate A-2, in Appendix A.

Existing concrete pavement at the borings was first cut with a core barrel prior to field drilling. The field drilling was performed with a truck-mounted drilling rig primarily using dry auger method, then using wet rotary method once saturated granular soils were encountered or boring caved in. Undisturbed samples of cohesive soils were obtained from the borings by pushing 3-inch diameter thin-wall, seamless steel Shelby tube samplers in general accordance with ASTM D 1587. Granular soils were sampled with a 2-inch split-barrel sampler in accordance with ASTM D 1586. Standard Penetration Test resistance (N) values were recorded for the granular soils as “Blows per Foot” and are shown on the boring logs. Strength of the cohesive soils was estimated in the field using a hand penetrometer. The undisturbed samples of cohesive

soils were extruded mechanically from the core barrels in the field and wrapped in aluminum foil; all samples were sealed in plastic bags to reduce moisture loss and disturbance. The samples were then placed in core boxes and transported to the AEC laboratory for testing and further study. After the completion of drilling, borings were grouted with cement-bentonite, and the pavement patched with non-shrink grout or asphalt depending on the existing pavement type. Boring B-2 was converted to piezometer upon completion of drilling in order to have 24-hour and 30-day water level readings. Piezometer details are presented on Plate B-2, in Appendix B. Piezometer well and plugging reports are presented in Appendix E. Borings were surveyed by Kuo & Associates, Inc. and the boring designations and depths, coordinates, and elevations are presented in Table 1.

Table 1. Summary of Borings, Depths, and Locations

Boring No. (Piezometer No.)	Boring (PZ) Depth in feet	Street	Elevation in feet	North	East
B-1	40	Holcombe	41.24	13823386.89	3116513.24
B-2 (PZ-1)	40 (25)	Holcombe	41.80	13823099.22	3116866.09
B-3	35	Holcombe	41.88	13822840.11	3117236.72
B-4	30	Holcombe	41.69	13822622.31	3117777.74
B-5	10	Grand	44.02	13822436.10	3117577.01
B-6	30	Grand	41.66	13822802.18	3117673.11
B-7	10	Grand	43.68	13823216.00	3117775.44

3.0 LABORATORY TESTING PROGRAM

Soil laboratory testing was performed by AEC personnel. Samples from the borings were examined and classified in the laboratory by a technician under the supervision of a geotechnical engineer. Laboratory tests were performed on selected soil samples in order to evaluate the engineering properties of the foundation soils in accordance with applicable ASTM Standards. Atterberg limits, moisture contents, percent passing a No. 200 sieve, and dry unit weight tests were performed on typical samples to establish the index properties and confirm field classification of the subsurface soils. Strength properties of cohesive soils were determined by means of undrained-unconsolidated (UU) triaxial tests performed on undisturbed samples. The test results are presented on the boring logs. Details of the soils encountered in the borings are presented on Plates A-3 through A-9, in Appendix A. A key to the boring logs, classification of soils

for engineering purposes, terms used on boring logs, and reference ASTM Standards for laboratory testing are presented on Plates A-10 through A-13, in Appendix A. A summary of the laboratory test results is presented on Plates A-14 through A-16, in Appendix A.

4.0 SITE CONDITIONS

Based on AEC's site visit, existing concrete pavements along the Holcombe Boulevard is in fair condition, whereas the existing asphalt pavement along Grand Boulevard is in poor condition with pot holes, longitudinal cracks, and many asphalt overlaying patches. A summary of pavement types encountered in our borings are presented on Table 2.

Table 2. Existing Pavement Encountered at Borings

Boring No.	Street	Pavement Section
B-1	Holcombe	10" concrete, 10" lime-stabilized clay base
B-2	Holcombe	10" concrete, 6" stabilized clay base
B-3	Holcombe	10.5" concrete, 13.5" lime-stabilized clayey sand base
B-4	Holcombe	10.5" concrete, 7" stabilized sand base
B-5	Grand	5.5" asphalt, 18.5" stabilized sand and crushed shell base
B-6	Grand	7" asphalt, 2" sand, limestone fragments, and shell base
B-7	Grand	13.5" asphalt, 5" stabilized sand and crushed shell base

4.1 Subsurface Conditions

Generalized subsurface profile along the proposed alignment is presented on Plate B-1, in Appendix B. Soil strata depicted in our borings are summarized below:

Borings	Depth	Description of Stratum
B-1	0" - 10"	Pavement: 10" concrete
	10" - 20"	Base: 10" lime-stabilized clay, with gravel
	20" - 8'	Firm to very stiff, Fat Clay w/Sand (CH), with slickensides
	8' - 10'	Stiff to very stiff, Lean Clay (CL), with slickensides and silty sand pockets
	10' - 12'	Sandy Silt (ML), with fat clay pockets
	12' - 40'	Firm to hard, Fat Clay (CH), with slickensides

.

AVILES ENGINEERING CORP.

Borings	Depth	Description of Stratum
B-2	0” - 10”	Pavement: 10” concrete
	10” - 16”	Base: 6” stabilized clay
	16” - 12’	Stiff to very stiff, Fat Clay (CH), with slickensides
	12’ - 22’	Very stiff to hard, Sandy Lean Clay (CL)
	22’ - 40’	Very stiff to hard, Fat Clay (CH), with slickensides
B-3	0” - 10.5”	Pavement: 10.5” concrete
	10.5” - 2’	Base: 13.5” lime-stabilized clayey sand
	2’ - 35’	Stiff to hard, Fat Clay (CH), with slickensides
B-4	0” - 10.5”	Pavement: 10.5” concrete
	10.5” - 17.5”	Base: 7” stabilized sand
	17.5” - 14’	Firm to very stiff, Fat Clay (CH), with slickensides
	14’ - 28’	Very stiff to hard, Lean Clay w/Sand (CL)
	28’ - 30’	Silty Sand (SM), with clay pockets
B-5	0” - 5.5”	Pavement: 5.5” asphalt
	5.5” - 2’	Base: 18.5” stabilized sand and crushed shell
	2’ - 4’	Fill: Clayey Sand (SC), with crushed shell and gravel
	4’ - 10’	Firm to very stiff, Fat Clay (CH), with slickensides
B-6	0” - 7”	Pavement: 7” asphalt
	7” - 9”	Base: 2” sand, limestone fragments, and shell
	9” - 26’	Stiff to very stiff, Fat Clay (CH), with slickensides
	26’ - 30’	Clayey Sand (SC), with silty sand and silt pockets
B-7	0” - 13.5”	Pavement: 13.5” asphalt
	13.5” - 18.5”	Base: 5” stabilized sand and crushed shell
	18.5” - 10’	Stiff to very stiff, Fat Clay (CH), with slickensides

Subsurface Soil Properties: The subsurface clayey soils encountered in the borings have high to very high plasticity, with liquid limits (LL) ranging from 36 to 101, and plasticity indices (PI) ranging from 23 to 69. The cohesive soils encountered are classified as “CL” and “CH” type soils and granular soils are classified as “ML”, “SM”, and “SC” type soils in accordance with ASTM D 2487. High plasticity clays can undergo significant volume changes due to seasonal changes in moisture contents. “CH” soils undergo significant volume changes due to seasonal changes in soil moisture contents. “CL” type soils with lower LL (less than 40) and PI (less than 20) generally do not undergo significant volume changes with changes in moisture content. However, “CL” soils with LL approaching 50 and PI greater than 20 essentially behave as “CH” soils and could undergo significant volume changes. Slickensides were encountered in clayey soils.

Groundwater Conditions: Groundwater was encountered at a depth of 25 feet below grade during drilling in Boring B-2 and subsequently rose to a depth of 19 feet approximately 15 minutes after the initial encounter. Groundwater was not encountered in the remaining borings during drilling or after completion of the drilling. A summary of groundwater depths in our borings are presented in Table 3. The information in this report summarizes conditions found on the date the borings were drilled. It should be noted that our groundwater observations are short-term; groundwater depths and subsurface soil moisture contents will vary with environmental variations such as frequency and magnitude of rainfall and the time of year when construction is in progress.

Table 3. Groundwater Depths in Borings

Boring No.	Date Drilled	Boring Depth (ft)	Groundwater Depth Encountered during Drilling (ft)	Groundwater Depth 15-min after Initial Encounter (ft)	24-hr/ 30-day Groundwater Depth (ft)
B-1	10/1/14	40	N/A	N/A	N/A
B-2 (PZ-1)	10/1/14	40	25	19	18.8 (10/2/14) 19.4 (11/4/14)
B-3	10/1/14	35	N/A	N/A	N/A
B-4	10/1/14	30	N/A	N/A	N/A
B-5	10/1/14	10	N/A	N/A	N/A
B-6	10/1/14	30	N/A	N/A	N/A
B-7	10/1/14	10	N/A	N/A	N/A

4.2 Hazardous Materials

No signs of visual staining or odors were encountered during field drilling or during processing of the soil samples in the laboratory.

4.3 Geologic Conditions

Fault study is not included in AEC's scope of services.

.

AVILES ENGINEERING CORP.

4.4 Subsurface Variations

It should be emphasized that: (i) at any given time, groundwater depths can vary from location to location, and (ii) at any given location, groundwater depths can change with time. Groundwater depths will vary with seasonal rainfall and other climatic/environmental events. Subsurface conditions may vary away from and in between the boring locations.

Clay soils in the Houston area typically have secondary features such as slickensides, calcareous nodules, and contain sand/silt seams/lenses/layers/pockets. It should be noted that the information in the boring logs is based on 3-inch diameter soil samples which were generally obtained at intervals of 2 feet in the top 20 feet of the borings and at intervals of 5 feet thereafter to the boring termination depths. A detailed description of the soil secondary features may not have been obtained due to the small sample size and sampling interval between the samples. Therefore, while a boring log shows some soil secondary features, it should not be assumed that the features are absent where not indicated on the boring logs.

5.0 GEOTECHNICAL ENGINEERING RECOMMENDATIONS

Based on the information and the profile drawings provided by AECOM to AEC on October 31, 2014, AEC understands that the street reconstruction consists of: (i) replacement of approximately 1,600 linear feet of a 42- to 48-inch storm sewer line along Holcombe Boulevard between Almeda Road and Grand Boulevard; the maximum invert depth will be 14 feet below existing grade, while the storm sewer manhole foundations will be founded at a maximum depth of 22 feet below existing grade. The underground storm sewer will be installed with open cut method; and (ii) replacement of existing roadway pavement with new pavement which includes: (a) full width reconstruction for Holcombe Blvd from 180 feet east to 600 feet west of Grand Blvd, whereas north lane only from 600 feet west of Grand Blvd to Almeda Road; and (b) full width reconstruction for Grand Blvd from 230 feet south to approximately 460 feet north of Holcombe Blvd. AEC understands that some areas of the existing roadway will be raised to alleviate drainage problems; however, the detail locations are not available to AEC at this time.

5.1 Installation of Underground Utilities by Open-Cut Method

Underground utilities installed by open-cut method should be installed in accordance with Section 02317 of the latest edition of the City of Houston Standard Construction Specifications (COHSCS).

5.1.1 Geotechnical Parameters for Underground Utilities

Recommended geotechnical parameters for the subsurface soils at the site to be used for design of underground utilities are presented on Plates C-1a and C-1b, in Appendix C. The design values are based on the results of field and laboratory test data on individual boring logs as well as our experience with similar projects in the area. It should be noted that because of the variable nature of soil stratigraphy, soil types and properties along the alignment or at locations away from a particular boring may vary substantially.

5.1.2 Loadings on Pipes

Underground utilities support the weight of the soil and water above the crown, as well as roadway traffic and any structures that exist above the utilities.

Earth Loads: For underground utilities to be installed using open cut methods, the vertical soil load W_e can be calculated as the larger of the two values from Equations (1) and (3):

$$W_e = C_d \gamma B_d^2 \qquad \text{.....Equation (1)}$$

$$C_d = [1 - e^{-2K\mu'(H/B_d)}]/(2K\mu') \qquad \text{.....Equation (2)}$$

$$W_e = \gamma B_c H \qquad \text{.....Equation (3)}$$

where:
- W_e = trench fill load, in pounds per linear foot (lb/ft);
- C_d = trench load coefficient, see Plate C-2, in Appendix C;
- γ = effective unit weight of soil over the conduit, in pounds per cubic foot (pcf);
- B_d = trench width at top of the conduit < 1.5 B_c (ft);
- B_c = outside diameter of the conduit (ft);
- H = variable height of fill (ft); when the height of fill above the top of the conduit H_c >2 B_d, $H = H_h$ (height of fill above the middle of the conduit). When H_c < 2 B_d, H varies over the height of the conduit; and
- $K\mu'$ = 0.1650 maximum for sand and gravel,

0.1500 maximum for saturated top soil,
0.1300 maximum for ordinary clay,
0.1100 maximum for saturated clay.

When underground conduits are located below groundwater, the total vertical dead loads should include the weight of the projected volume of water above the conduits.

Traffic Loads: The vertical stress on top of an underground conduit, p_L (psf), resulting from traffic loads (from a H-20 or HS-20 truck) can be obtained from Plate C-3, in Appendix C. The live load on top of the underground conduit can be calculated from Equation (4):

$$W_L = p_L B_c \qquad \text{.....Equation (4)}$$

where: W_L = live load on the top of the conduit (lb/ft);
p_L = vertical stress (on the top of the conduit) resulting from traffic loads (psf);
B_c = outside diameter of the conduit, (ft);

Lateral Loads: The lateral soil pressure p_l can be calculated from Equation (5); hydrostatic pressure should be added, if applicable.

$$p_l = 0.5\,(\gamma H_h + p_s) \qquad \text{.....Equation (5)}$$

where: H_h = height of fill above the center of the conduit (ft);
γ = effective unit weight of soil over the conduit (pcf);
p_s = vertical pressure on conduit resulting from traffic and/or construction equipment (psf).

5.1.3 Trench Stability

Cohesive soils in the Houston area contain many secondary features which affect trench stability, including silt layer, sand seams and slickensides (such as sandy silt (ML) layer at a depth of 10 to 12 feet in Boring B-1 and boring caving in that was possibly caused by clayey sand pockets/layer at a depth of 18 to 22 feet in Boring B-2). Slickensides are shiny weak failure planes which are commonly present in fat clays; such clays often fail along these weak planes when they are not laterally supported, such as in an open excavation. The Contractor should not assume that slickensides and sand seams/layers/pockets are absent where not indicated on the logs.

The Contractor should be responsible for designing, constructing and maintaining safe excavations. The excavations should not cause any distress to existing structures.

Trenches 20 feet and Deeper: OSHA requires that shoring or bracing for trenches 20 feet and deeper be specifically designed by a licensed professional engineer.

Trenches Less than 20 Feet Deep: Trench excavations that are less than 20 feet deep may be shored, sheeted and braced, or laid back to a stable slope for the safety of workers, the general public, and adjacent structures, except for excavations which are less than 5 feet deep and verified by a competent person to have no cave-in potential. The excavation and trenching should be in accordance with Occupational Safety and Health Administration (OSHA), Safety and Health Regulations, 29 CFR, Part 1926. Recommended OSHA soil types for trench design for existing soils can be found on Plates C-1a and C-1b, in Appendix C. Fill soils are considered OSHA Class 'C'; submerged cohesive soils should also be considered OSHA Class 'C', unless they are dewatered first.

Critical Height is defined as the height a slope will stand unsupported for a short time; in cohesive soils, it is used to estimate the maximum depth of open-cuts at given side slopes. Critical Height may be calculated based on the soil cohesion. Values for various slopes and cohesion are shown on Plate D-1, in Appendix D. Cautions listed below should be exercised in use of Critical Height applications:

1. No more than 50 percent of the Critical Height computed should be used for vertical slopes. Unsupported vertical slopes are not recommended where granular soils or soils that will slough when not laterally supported are encountered within the excavation depth.

2. If the soil at the surface is dry to the point where tension cracks occur, any water in the crack will increase the lateral pressure considerably. In addition, if tension cracks occur, no cohesion should be assumed for the soils within the depth of the crack. The depth of the first waler should not exceed the depth of the potential tension crack. Struts should be installed before lateral displacement occurs.

3. Shoring should be provided for excavations where limited space precludes adequate side slopes, e.g., where granular soils will not stand on stable slopes and/or for deep open cuts.

4. All excavation, trenching and shoring should be designed and constructed by qualified professionals in accordance with OSHA requirements.

The maximum (steepest) allowable slopes for OSHA Soil Types for excavations less than 20 feet are presented on Plate D-2, in Appendix D.

If limited space is available for the required open trench side slopes, the space required for the slope can be reduced by using a combination of bracing and open cut as illustrated on Plate D-3, in Appendix D. Guidelines for bracing and calculating bracing stress are presented below.

Computation of Bracing Pressures: The following method can be used for calculating earth pressure against bracing for open cuts. Lateral pressure resulting from construction equipment, traffic loads, or other surcharge should be taken into account by adding the equivalent uniformly distributed surcharge to the design lateral pressure. Hydrostatic pressure, if any, should also be considered. The active earth pressure at depth z can be determined by Equation (6). The design soil parameters for trench bracing design are presented on Plates C-1a and C-1b, in Appendix C.

$$p_a = (q_s + \gamma h_1 + \gamma' h_2)K_a - 2c\sqrt{K_a} + \gamma_w h_2 \qquad \text{.....Equation (6)}$$

where:
- p_a = active earth pressure (psf);
- q_s = uniform surcharge pressure (psf);
- γ, γ' = wet unit weight and buoyant unit weight of soil (pcf);
- h_1 = depth from ground surface to groundwater table (ft);
- h_2 = $z-h_1$, depth from groundwater table to the point under consideration (ft);
- z = depth below ground surface for the point under consideration (ft);
- K_a = coefficient of active earth pressure;
- c = cohesion of clayey soils (psf); c can be omitted conservatively;
- γ_w = unit weight of water, 62.4 pcf.

Pressure distribution for the practical design of struts in open cuts for clays and sands are illustrated on Plates D-4 through D-6, in Appendix D.

Bottom Stability: In open-cuts, it is necessary to consider the possibility of the bottom failing by heaving, due to the removal of the weight of excavated soil. Heaving typically occurs in soft plastic clays when the excavation depth is sufficiently deep enough to cause the surrounding soil to displace vertically due to bearing capacity failure of the soil beneath the excavation bottom, with a corresponding upward movement of the soils in the bottom of the excavation. In fat and lean clays, heave normally does not occur unless the ratio of Critical Height to Depth of Cut approaches one. In very sandy and silty lean clays and granular

soils, heave can occur if an artificially large head of water is created due to installation of impervious sheeting while bracing the cut. This can be mitigated if groundwater is lowered below the excavation by dewatering the area. Guidelines for evaluating bottom stability in clay soils are presented on Plate D-7, in Appendix D.

If the excavation extends below groundwater and the soils at or near the bottom of the excavation are mainly sands or silts, the bottom can fail by blow-out (boiling) when a sufficient hydraulic head exists. The potential for boiling or in-flow of granular soils increases where the groundwater is pressurized. To reduce the potential for boiling of excavations terminating in granular soils below pressurized groundwater, the groundwater table should be lowered at least 3 feet below the excavation in accordance with Section 01578 of the latest edition of the City of Houston Standard General Requirement (COHSGR).

Calcareous nodules, silt/sand pockets, and fat clays with slickensides were encountered in our borings. These secondary structures may become sources of localized instability when they are exposed during excavation, especially when they become saturated. Such soils have a tendency to slough or cave in when not laterally confined, such as in trench excavations. The Contractor should be aware of the potential for cave-in of the soils. Low plasticity soils (silts and clayey silts) will lose strength and may behave like granular soils when saturated.

5.1.4 Bedding and Backfill

Trench excavation, pipe embedment material, and backfill for the proposed underground utilities should be in general accordance with Section 02317 of the latest edition of the COHSCS. Backfill should be placed in loose lifts not exceeding 8 inches and compacted to 95 percent of its ASTM D-698 (Standard Proctor) maximum dry density at a moisture content ranging between optimum and 3 percent above optimum.

5.2 Manholes and Junction Boxes

Cast-in-place and pre-cast manhole construction should be in general accordance with Sections 02081 and 02082 of the latest edition of the COHSCS. The Contractor should be responsible for designing, constructing and maintaining safe excavations for the proposed manholes. Manhole open-cut excavations shall be in general accordance with Section 5.1.3 of this report. Geotechnical recommendations to guide

design of manholes and junction boxes are presented below.

5.2.1 Allowable Bearing Capacity

We assume mat foundations will be used for the manholes and junction boxes. Based on soils encountered in our borings, a net allowable bearing capacity of 1,500 psf for dead loads and 2,250 psf for total loads should be used for mat foundations of the proposed manholes; whichever allowable bearing capacity is critical should be used for design. These values include a factor of safety of 3 for dead load and 2 for total load, respectively. AEC should be notified if the manhole depths are different than what we assumed, so that the given bearing capacities can be revised as necessary.

The net footing pressure may be determined by:

1. Summing the weight of the load applied to the foundation, the weight of the foundation and the weight of soil backfill placed above the foundation.
2. Subtracting the weight of soil excavated from the foundation.
3. Dividing the result of items 1 and 2 by the base area of the foundation.

5.2.2 Uplift Resistance

The manholes should be designed to resist hydrostatic uplift. For uplift design of the underground structures, we recommend that the water level be assumed to be at the ground surface or 100-year flood elevation, whichever is more critical. If the dead weights of the structures are inadequate to resist uplift forces, toe extensions of the base slabs may be constructed so that the effective weight of the soil above the extended slabs can be utilized to resist the uplift forces. The unit buoyant weight of concrete can be taken as 90 pcf. The minimum recommended factors of safety against uplift should be 1.1 for concrete weight, 1.5 for soil weight and 3.0 for soil friction. Design soil parameters are included on Plates C-1a and C-1b, in Appendix C. Recommended design criteria for uplift resistance are shown on Plate D-8, in Appendix D.

5.2.3 Lateral Earth Pressures

Typically, there is no movement allowed for the walls of the manholes. Therefore, the walls should be designed for at-rest earth pressure. The magnitudes of these pressures will depend on the type and density

of the backfill, surcharge on the backfill and hydrostatic pressure, if any. If the backfill is over-compacted or if highly plastic clays are placed behind the walls, the lateral earth pressure could exceed the vertical pressure. Typical backfill materials placed behind manhole walls in the Houston area include select fill and cement-stabilized sand.

Lateral pressure resulting from construction equipment or other surcharge should be taken into account by adding the equivalent uniformly distributed surcharge to the design lateral pressure. Hydrostatic pressure should also be included, unless adequate drainage is provided behind the walls. The at-rest earth pressure at depth z can be determined by the Equation (7). The design soil parameters for earth pressure design are presented on Plates C-1a and C-1b, in Appendix C.

$$p_0 = (q_s + \gamma h_1 + \gamma' h_2) K_0 + \gamma_w h_2 \qquad \text{.....Equation (7)}$$

where,
- p_0 = at-rest earth pressure, (psf);
- q_s = uniform surcharge pressure, (psf);
- γ, γ' = wet and buoyant unit weights of soil, (pcf);
- h_1 = depth from ground surface to ground water table, (ft);
- h_2 = $z-h_1$, depth from ground water table to point under consideration, (ft);
- z = depth below ground surface, (ft);
- K_0 = coefficient of at-rest earth pressure;
- γ_w = unit weight of water, 62.4 pcf.

5.2.4 Manhole Backfill Material

Manhole and junction box bedding and backfill should be in accordance with the Sections 02316 and 02317 of the latest edition of the COHSCS.

5.3 Pavement Reconstruction

Based on our site visit and coring samples (see Table 2 in Section 4), Holcombe Boulevard within the reconstruction alignment is currently a 6-lane (3 lanes in each direction) concrete pavement; the street is classified as Major Thoroughfare with medium to high traffic volume; existing pavement are generally in fair condition. Grand Boulevard within the pavement reconstruction alignment is currently a 2-lane (1 lane in each direction) asphalt pavement; the street is classified as Local Street with light to medium traffic

volume; existing pavement are in poor conditions with potholes, longitudinal cracks, and many asphalt overlaying patches.

According to Section 10.05 of the latest edition of the COH Infrastructure Design Manual, major thoroughfares must have a minimum thickness of 8 inches and a minimum stabilized subgrade thickness of 8 inches. AEC assumes that the new pavements will be placed at or near existing grade, while some areas of the roadway will be raised to alleviate drainage problems. Any pavement in the proposed reconstruction areas that will be replaced as a result of underground utility construction or street reconstruction should be replaced with a section that matches the existing section. However, if the existing section thickness is less than the minimum required by the COH Infrastructure Design Manual, the new section should meet the minimum thickness, instead.

The pavement design recommendations developed below are in accordance with the "AASHTO Guide for Design of Pavement Structures," 1993 edition.

5.3.1 Estimation of Traffic Loading

Based on the Houston Regional Traffic Count (HRTC) Map (published by the Texas Transportation Institute), and the City of Houston Geographic Information Management System (GIMS), the traffic volume in different within or nearby the project alignments are summarized in Table 4.

Table 4 - Traffic Volume Information Obtained from HRTC Map and GIMS

Sources	Location	Year	ADT
HRTC	3131 Holcombe Blvd	2008	22,226
HRTC	2000 Holcombe Blvd	2008	23,423
COH (GIMS)	3131 Holcombe Blvd	2011	25,176
COH (GIMS)	2000 Holcombe Blvd	2011	25,064
COH (GIMS)	Grand Blvd from Holcombe Blvd to Lockett St	2012	1,669

Based on the traffic data in Table 4, the ADT along Holcombe Blvd alignment can vary from 22,226 to 25,176 from year 2008 to 2011. AEC selected the highest average daily traffic (ADT) which was 25,176 vehicles per day (vpd) in 2011 for the analysis. Based on the 2008 ADT (i.e. 22,226), the growth rate from 2008 to 2011 was 8.6 percent. Based on this data, AEC projected a traffic count of 28,520 vpd in 2014.

For Grand Blvd alignment, we assumed the traffic volume to be 1,800 vpd in 2014 based on the traffic volume in 2012 (i.e. 1,699 vpd) and our experience on the similar local street.

Traffic design information such as types of vehicles, percentage of heavy trucks, and traffic volume growth rate for the pavement was not available when this report was prepared. AEC assumed the pavement will have a design life of 20 years.

Estimate Anticipated Traffic Loads: We first estimated traffic loads by estimating the number of repetitions of an 18-kip Equivalent Single-Axle Load (ESAL) over the project alignment. Pavement design is based on the anticipated design number of 18-kip ESAL the pavement is subjected to during its design life. The equation to calculate the number of 18-kip ESAL repetitions to use for pavement design is presented in Equation (8). Assumptions made by AEC to estimate 18-kip ESAL repetitions are presented on Table 5.

$$\text{18-kip ESAL} = (ADT)(T)(T_f)(D)(L)(G)(Y)(365) \qquad \text{.....Equation (8)}$$

where: ESAL = 18-kip Equivalent Single-Axle Load repetitions;
ADT = Average Daily Traffic, vehicles per day;
T = Percent of heavy trucks (for vehicles with 5 or more axles);
T_f = Truck factor (for vehicles with 5 or more axles);
D = Directional factor;
L = Lane factor;
G = Growth factor;
Y = Design life, in years.

Table 5. Parameters for Estimation of Traffic Loads within the Alignment

Parameters	Values	
	Holcombe Blvd	**Grand Blvd**
Average Daily Traffic (ADT)	28,520 vpd (both directions combined)	1,800 vpd (both direction combined)
Percent Heavy Trucks (T)	2% (assumed)	2% (assumed)
Truck factor (T_f)	4.0 (assumed)	4.0 (assumed)
Directional factor (D)	0.5 (each direction)	0.5 (each direction)
Lane factor (L)	0.8 (3 lane in each direction)	1.0 (1 lane in each direction)
Total Growth Rate Factor (G)	1.41 (assumed 3.5% annual growth rate over 20 years)	1.22 (assumed 2.0% annual growth rate over 20 years)
Design life (Y)	20 years (assumed)	20 years (assumed)
Estimated 18-kip ESALs	9,393,800	672,770

Based on the above assumptions, the estimated numbers of 18-kip ESAL repetitions over a design life of 20 years for the Holcombe and Grand Blvd alignment are approximately to be 9,393,800 and 672,770 18-kip ESAL, respectively. **AEC notes that calculated number of 18-kip ESAL repetitions is highly sensitive to heavy truck parameters such as percent heavy trucks and truck factor in pavement design. Differences between assumed and actual traffic parameters can have significant effects on overall pavement thickness design and ultimate roadway performance.** AEC should be notified if different traffic loads or design parameters are required for pavement design at the site, so that our analysis can be updated accordingly.

5.3.2 Rigid Pavement for Holcombe Boulevard

Based on our pavement cores, existing pavement along Holcombe alignment consists of 10- to 10.5- inch thick concrete. AEC recommends using concrete pavement thickness at least matches the existing pavement thickness.

Rigid pavement design is based on the anticipated design number of 18-kip ESALs the pavement is subjected to during its design life. The parameters that were used in computing the rigid pavement section are as follows:

Overall Standard Deviation (S_0)	0.35
Initial Serviceability (P_0)	4.5
Terminal Serviceability (P_t)	2.0
Reliability Level (R)	95%
Overall Drainage Coefficient (C_d)	1.2 (because of curb and gutter)
Load Transfer Coefficient (J)	3.2
Loss of Support Category (LS)	1.0
Roadbed Soil Resilient Modulus (M_R)	3,000 psi
Elastic Modulus (E_{sb}) of Stabilized Soils	20,000 psi
Composite Effective Modulus of Subgrade Reaction (k)	79 pci
Mean Concrete Modulus of Rupture (S'_c)	600 psi (at 28 days)
Concrete Elastic Modulus (E_c)	3.37×10^6 psi

The recommended pavement section for the alignment is presented on Table 6. Even though the minimum subgrade thickness required for the roadways is 10 inches to match the existing (according to the COH Infrastructure Design Manual), AEC increased the subgrade thickness to 12 inches due to the presence of very high-plasticity soils encountered at the ground surface in our borings in the project alignment.

Table 6. Recommended Rigid Pavement Section for the Alignment on Holcombe Blvd

Pavement Layer	Thickness (in)
Portland Cement Concrete	10
Lime-stabilized Subgrade (1)	12

Note: (1) Lime-stabilized subgrade recommendations are presented in Section 5.3.4 of this report.

Given the above design parameters, the concrete pavement sections for the alignment should withstand 11,482,000 repetitions of 18-kip ESALs. AEC should be notified if different standards or constants are required for pavement design at the site, so that our recommendations can be updated accordingly.

Concrete Pavement: Portland Cement Concrete (PCC) pavement should be constructed in accordance with Section 02751 of the latest edition of the COHSCS. According to Section 02751 of the latest edition of the COHSCS, concrete mix design has a required flexural strength of 600 psi at 28 days and field testing shall confirm a minimum concrete compressive strength of 3,500 psi at 28 days. *The Contractor shall be responsible for ensuring that a concrete mix design based on concrete compressive strength of 3,500 psi at 28 days also meets a minimum concrete flexural strength of 500 psi at 7 days and 600 psi at 28 days.*

Reinforcing Steel: Reinforcing steel should be in accordance with Section 02751 of the latest edition of the COHSCS. Reinforcing steel is required to control pavement cracks, deflections across pavement joints and resist warping stresses in rigid pavements. The cross-sectional area of steel (A_s) required per foot of slab width can be calculated as follows (for both longitudinal and transverse steel).

$$A_s = FLW/(2f_s) \qquad \text{.....Equation (9)}$$

where:
- A_s = Required cross-sectional area of reinforcing steel per foot width of pavement, in^2
- F = Coefficient of resistance between slab and subgrade, F = 1.8 for stabilized soil
- L = Distance between free transverse joints or between free longitudinal edges, ft.
- W = Weight of pavement slab per foot of width, lbs/ft
- f_s = Allowable working stress in steel, 0.75 x (yield strength), psi
  i.e. f_s = 45,000 psi for Grade 60 steel.

.

AYLES ENGINEERING CORP.

5.3.3 Asphalt Pavement for Grand Boulevard

Pavement Design: Flexible pavement design procedure includes determination of the structural number (SN) for the proposed pavement, as well as the thickness of individual components of the surface course, base course, and subgrade. The basic equation developed by the AASHTO Road Test is:

$$SN = a_1(D_1) + a_2(D_2) + a_3(D_3) \qquad \text{.....Equation (10)}$$

where: SN = Structural Number for the total flexible pavement structure.
a_1, a_2, a_3 = layer coefficients for surface, base and subgrade course respectively.
D_1, D_2, D_3 = thickness of surface, base and subgrade course, respectively, in inches.

Layer coefficients used for design are presented on Table 7.

Table 7. Layer Coefficients for Asphalt Pavements

Pavement Layer	Layer Coefficient
HMAC	a1 = 0.44
Black Base	a2 = 0.34
Stabilized Subgrade	a3 = 0.11

The parameters that were used in computing the flexible pavement section are as follows:

Roadbed Soil Resilient Modulus (M_R)	3,000 psi
Drainage Coefficient (C_d)	1.0
Overall Standard Deviation (S_0)	0.45
Reliability Level (R)	90%
Initial Serviceability (P_0)	4.2
Terminal Serviceability (P_t)	2.5

The recommended flexible pavement section is summarized on Table 8 below.

Table 8. Recommended Flexible Pavement Sections

Pavement Layer	Thickness (in)
Hot-Mix Asphaltic Concrete	3
Black Base (BB)	6
Lime Stabilized Subgrade[1]	12

Note: (1) Stabilized subgrade recommendations are presented in Section 5.3.4 of this report.

Given the above design parameters, the recommended pavement section should sustain 801,520 repetitions of 18-kip ESALs. The design engineer should verify whether the proposed pavement sections will provide enough ESALs for the anticipated amount of site traffic. AEC should be notified if different standards or constants are required for pavement design at the site, so that our recommendations can be updated accordingly.

Asphalt Pavement: HMAC pavement should be constructed in general accordance with Section 02741 of the latest edition of the COHSCS. The HMAC should be compacted to least 91 percent of its maximum dry density in accordance with TxDOT Test Method Tex-227-F.

Black Base: Asphalt-stabilized base shall be in accordance with Section 02711 of the latest edition of the COHSCS. The base materials should be compacted to least 91 percent of its maximum dry density in accordance with Texas Department of Transportation (TxDOT) Test Method Tex-227-F.

Prime Coat: The surface of the compacted base should be primed in accordance with Section 02742 of the latest edition of the COHSCS.

5.3.4 Pavement Subgrade Preparation

Existing pavement and base should be demolished in accordance with Section 02221 of the latest edition of the COHSCS. Subgrade preparation should extend a minimum of 2 feet beyond the paved area perimeters. After demolition of existing pavement and base, we recommend that a competent soil technician inspect the exposed subgrade to determine if there are any unsuitable soils or other deleterious materials. The

excavation depth should be increased when inspection indicates the presence of organics and deleterious materials to greater depths. The exposed soils should be proof-rolled in accordance with Item 216 of the 2004 TxDOT Standard Specifications to identify and remove any weak, compressible, or other unsuitable materials; such materials should be replaced with compacted select fill.

Scarify the top 12 inches of the exposed subgrade and stabilize the underlying soils with a minimum of 8 percent hydrated lime by dry soil weight (for the area that will be raised by compacted select fill, use minimum 5 percent hydrated lime). Lime stabilization shall be performed in accordance with Sections 02336 of the latest edition of the COHSCS. The percentage of lime required for stabilization are preliminary estimates for planning purposes only; laboratory testing should be performed to determine optimum contents for stabilization prior to construction. The stabilized soils should be compacted to 95 percent of their ASTM D 698 (Standard Proctor) dry density at a moisture content ranging from optimum to 3 percent above optimum. After subgrade stabilization, AEC recommends that compacted selected fill or on-site stabilized soils be used to achieve the final grade. Select fill should be in general accordance with Sections 02316 and 02317 of the latest edition of COHSCS.

6.0 CONSTRUCTION CONSIDERATIONS

6.1 Site Preparation

To mitigate site problems that may develop following prolonged periods of rainfall, it is essential to have adequate drainage to maintain a relatively dry and firm surface prior to starting any work at the site. Adequate drainage should be maintained throughout the construction period. Methods for controlling surface runoff and ponding include proper site grading, berm construction around exposed areas, and installation of sump pits with pumps.

6.2 Groundwater Control

The need for groundwater control will depend on the depth of excavation relative to the groundwater depth at the time of construction. In the event that there is heavy rain prior to or during construction, the groundwater table may be higher than indicated in this report; higher seepage is also likely and may require a more extensive groundwater control program. In addition, groundwater may be pressurized in certain

areas of the alignment, requiring further evaluation and consideration of the excess hydrostatic pressures. Groundwater control should be in general accordance with Section 01578 of the latest edition of the COHSGR.

The Contractor should be responsible for selecting, designing, constructing, maintaining, and monitoring a groundwater control system and adapt his operations to ensure the stability of the excavations. Groundwater information presented in Section 4.1 and elsewhere in this report, along with consideration for potential environmental and site variation between the time of our field exploration and construction, should be incorporated in evaluating groundwater depths. The following recommendations are intended to guide the Contractor during design and construction of the dewatering system.

In cohesive soils seepage rates are lower than in granular soils and groundwater is usually collected in sumps and channeled by gravity flow to storm sewers. If cohesive soils contain significant secondary features, seepage rates will be higher. This may require larger sumps and drainage channels, or if significant granular layers are interbedded within the cohesive soils, methods used for granular soils may be required. Where it is present, pressurized groundwater will also yield higher seepage rates.

Groundwater for excavations within saturated sands can be controlled by the installation of wellpoints. The practical maximum dewatering depth for well points is about 15 feet. When groundwater control is required below 15 feet, possible ground water control measures include: (i) deep wells with turbine or submersible pumps; (ii) multi-staged well points; or (iii) water-tight sheet pile cut-off walls. Generally, the groundwater depth should be lowered at least 5 feet below the excavation bottom (in accordance with Section 01578 of the latest edition of the COHSGR) to be able to work on a firm surface when water-bearing granular soils are encountered.

Extended and/or excessive dewatering can result in settlement of existing structures in the vicinity; the Contractor should take the necessary precautions to minimize the effect on existing structures in the vicinity of the dewatering operation. We recommend that the Contractor verify the groundwater depths and seepage rates prior to and during construction and retain the services of a dewatering expert (if necessary) to assist him in identifying, implementing, and monitoring the most suitable and cost-effective method of controlling groundwater.

For open cut construction in cohesive soils, the possibility of bottom heave must be considered due to the removal of the weight of excavated soil. In lean and fat clays, heave normally does not occur unless the ratio of Critical Height to Depth of Cut approaches one. In silty clays, heave does not typically occur unless an artificially large head of water is created through the use of impervious sheeting in bracing the cut. Guidelines for evaluating bottom stability are presented in Section 5.1.3 of this report.

6.3 Construction Monitoring

Pavement construction and subgrade preparation, as well as excavation, bedding, and backfilling of underground utilities should be monitored by qualified geotechnical professionals to check for compliance with project documents and changed conditions, if encountered. AEC should be allowed to review the design and construction plans and specifications prior to release to check that the geotechnical recommendations and design criteria presented herein are properly interpreted.

6.4 Monitoring of Existing Structures

Existing structures in the vicinity of the proposed alignment should be closely monitored prior to, during, and for a period after excavation. Several factors (including soil type and stratification, construction methods, weather conditions, other construction in the vicinity, construction personnel experience and supervision) may impact ground movement in the vicinity of the alignment. We therefore recommend that the Contractor be required to survey and adequately document the condition of existing structures in the vicinity of the proposed alignments.

7.0 LIMITATIONS

The information contained in this report summarizes conditions found on the date the borings were drilled. The attached boring logs are true representations of the soils encountered at the specific boring locations on the date of drilling. Reasonable variations from the subsurface information presented in this report should be anticipated. If conditions encountered during construction are significantly different from those presented in this report; AEC should be notified immediately.

This investigation was performed using the standard level of care and diligence normally practiced by recognized geotechnical engineering firms in this area, presently performing similar services under similar circumstances. This report is intended to be used in its entirety. The report has been prepared exclusively for the project and location described in this report. If pertinent project details change or otherwise differ from those described herein, AEC should be notified immediately and retained to evaluate the effect of the changes on the recommendations presented in this report, and revise the recommendations if necessary. The recommendations presented in this report should not be used for other structures located along these alignments or similar structures located elsewhere, without additional evaluation and/or investigation.

AVILES ENGINEERING CORP.

APPENDIX A

Plate A-1	Vicinity Map
Plate A-2	Boring Location Plan
Plates A-3 thru A-9	Boring Logs
Plate A-10	Key to Symbols
Plate A-11	Classification of Soils for Engineering Purposes
Plate A-12	Terms Used on Boring Logs
Plate A-13	ASTM & TXDOT Designation for Soil Laboratory Tests
Plates A-14 thru A-16	Summary of Lab Data

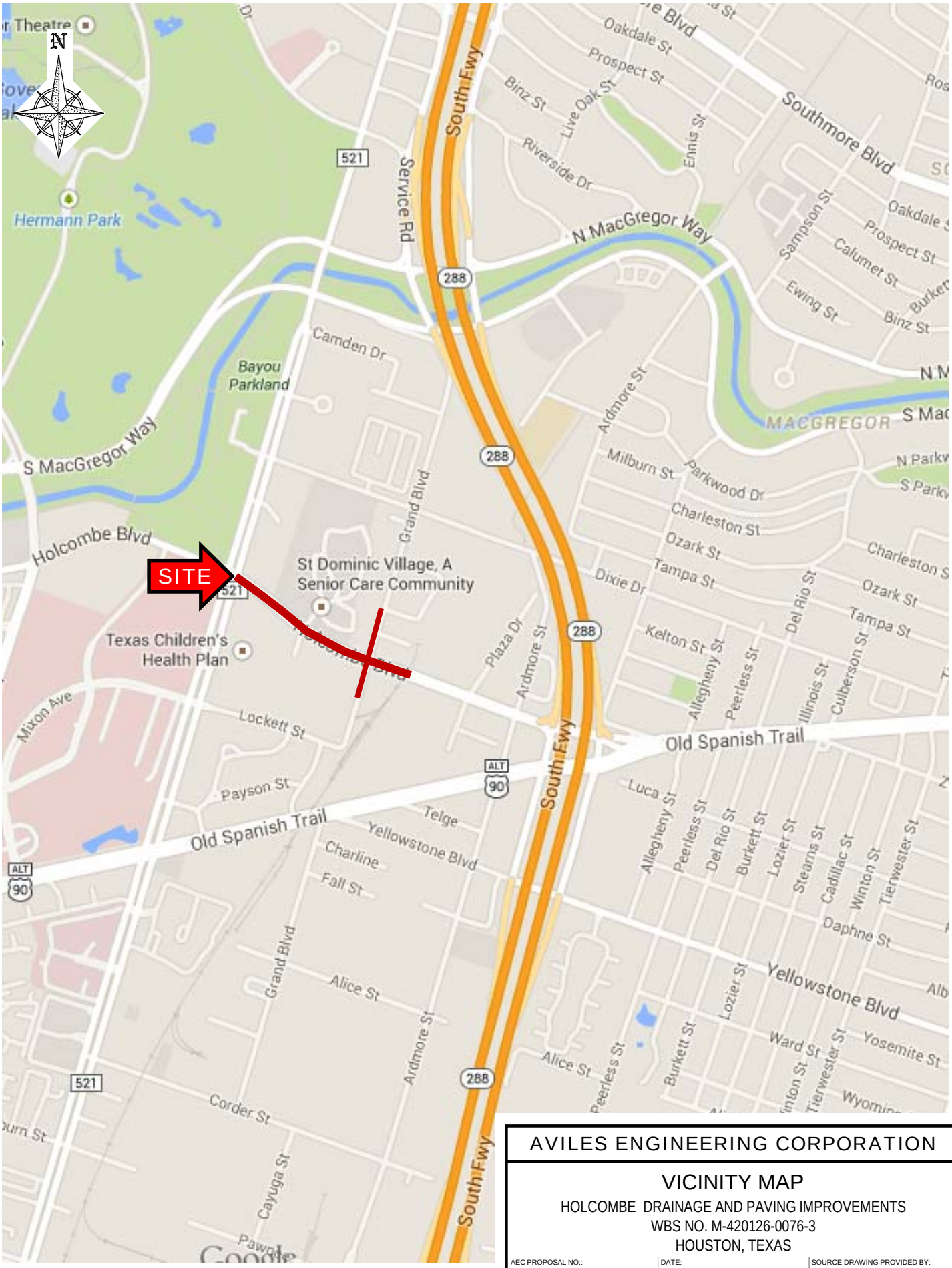

AVILES ENGINEERING CORPORATION

VICINITY MAP

HOLCOMBE DRAINAGE AND PAVING IMPROVEMENTS
WBS NO. M-420126-0076-3
HOUSTON, TEXAS

AEC PROPOSAL NO.:	DATE:	SOURCE DRAWING PROVIDED BY:
G154-14	11-3-14	GOOGLE EARTH PRO
APPROX. SCALE:	DRAFTED BY:	PLATE NO.:
N.T.S.	BpJ	PLATE A-1

AVILES ENGINEERING CORPORATION

BORING LOCATION PLAN (REVISED)

HOLCOMBE DRAINAGE AND PAVING IMPROVEMENTS
WBS NO. M-420126-0076-3
HOUSTON, TEXAS

AEC PROPOSAL NO.:	DATE:	SOURCE DRAWING PROVIDED BY:
G154-14	10-6-14	GOOGLE EARTH PRO
APPROX. SCALE:	DRAFTED BY:	PLATE NO.:
1" = 100'	BpJ	PLATE A-2

AVILES ENGINEERING CORP. GEOTECHNICAL ENGINEERS

PROJECT: **Holcombe Drainage and Paving Improvements** BORING **B-1**

COH WBS No. **M-420126-0076-3** TYPE 4" Dry Auger DATE **10/1/14**

DESCRIPTION
Survey Coordinates (TSPC, Surface):
Easting: 3116513.24
Northing: 13823386.89
Elevation: 41.24

ELEVATION IN FEET	DEPTH IN FEET	DESCRIPTION	S.P.T. BLOWS / FT.	-200 MESH	DRY DENSITY, PCF	MOISTURE CONTENT, %	LIQUID LIMIT	PLASTIC LIMIT	PLASTICITY INDEX
	0	Pavement: 10" concrete							
		Base: 10" lime-stabilized clay, with gravel							
		Firm to very stiff, gray and olive gray Fat Clay w/Sand (CH), with slickensides		76		36	81	27	54
		-olive tan, with ferrous nodules 2'-4'				30			
36	6	-light olive gray and tan 4'-8'			88	33			
						38			
		Stiff to very stiff, tan and light gray Lean Clay (CL), with slickensides and silty sand pockets		87	93	31	47	16	31
30	12	Light gray and tan Sandy Silt (ML), with fat clay pockets		62		19			
		Firm to hard, tan and gray Fat Clay (CH), with slickensides	14			24			
		-with silty clay and silty sand pockets 12'-14'				24			
24	18	-red and tan 14'-18'			94	28			
		-tan and gray 18'-25'				30			
18	24			95	96	28	73	23	50
		-olive gray, gray, red, and brown 28'-30'							
12	30					20			
		-brown 33'-35'		94	104	23	62	20	42
6	36								
		-red and brown 38'-40'				33			
0	42	Termination depth = 40 feet.							

SHEAR STRENGTH, TSF

△ Confined Compression
● Unconfined Compression
○ Pocket Penetrometer
□ Torvane

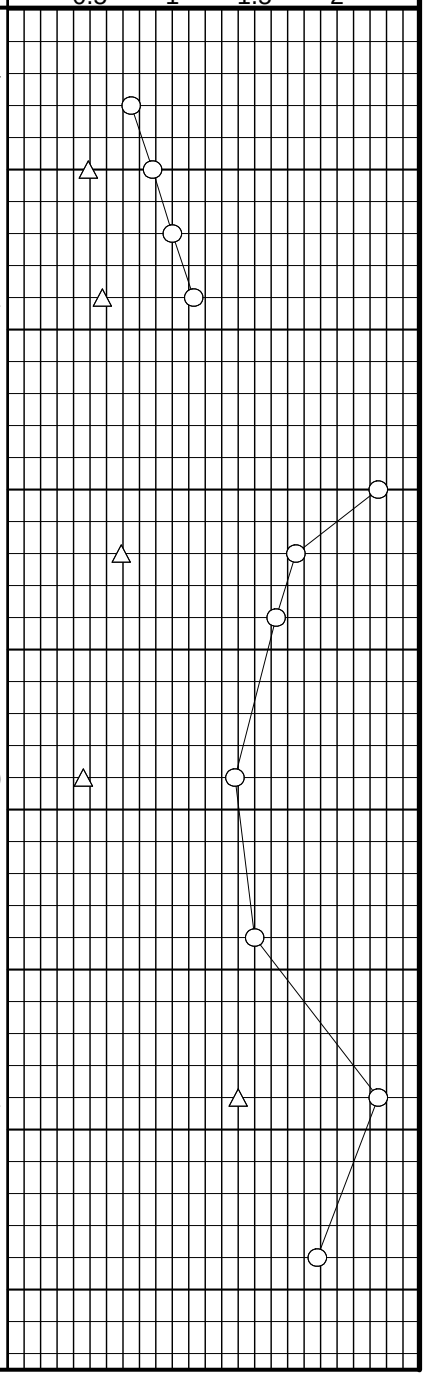

BORING DRILLED TO **40** FEET WITHOUT DRILLING FLUID
WATER ENCOUNTERED AT **N/A** FEET WHILE DRILLING
WATER LEVEL AT **N/A** FEET AFTER **COMPLETE**
DRILLED BY **V&S** DRAFTED BY **CHL** LOGGED BY **BPJ**

AVILES ENGINEERING CORP. GEOTECHNICAL ENGINEERS

PROJECT: **Holcombe Drainage and Paving Improvements** BORING **B-2**

COH WBS No. **M-420126-0076-3** TYPE 4" Dry Auger/Wet Rotary DATE **10/1/14**

DESCRIPTION

Survey Coordinates (TSPC, Surface):

Easting: 3116866.09

Northing: 13823099.22

Elevation: 41.80

ELEVATION IN FEET	DEPTH IN FEET	DESCRIPTION	S.P.T. BLOWS / FT.	-200 MESH	DRY DENSITY, PCF	MOISTURE CONTENT, %	LIQUID LIMIT	PLASTIC LIMIT	PLASTICITY INDEX
	0	Pavement: 10" concrete							
		Base: 6" stabilized clay				33			
		Stiff to very stiff, dark gray and brown Fat Clay (CH), with slickensides		94		32	78	25	53
		-with ferrous nodules 2'-6'							
		-tan 4'-6'				38			
36	6	-red, brown, and light gray 6'-10'		99	92	32	62	21	41
						37			
		-tan and light gray, with ferrous nodules 10'-12'			95	29			
30	12	Very stiff to hard, light gray and tan Sandy Lean Clay (CL)				17			
		-gray, red, and tan, with fat clay seams and ferrous nodules 14'-20'		70	116	17	37	13	24
		-with calcareous nodules 16'-18'				19			
24	18	-with clayey sand pockets and fat clay seams 18'-20'	34	66		21	42	17	28
		-boring cave in at 21.7' during drilling							
18	24	Very stiff to hard, red and brown Fat Clay (CH), with slickensides				28			
		-tan 28'-30'		95	100	26	64	21	43
12	30								
		-brown 33'-35'				29			
6	36								
		-red and brown 38'-40'				29			
		Termination depth = 40 feet.							
0	42								

SHEAR STRENGTH, TSF

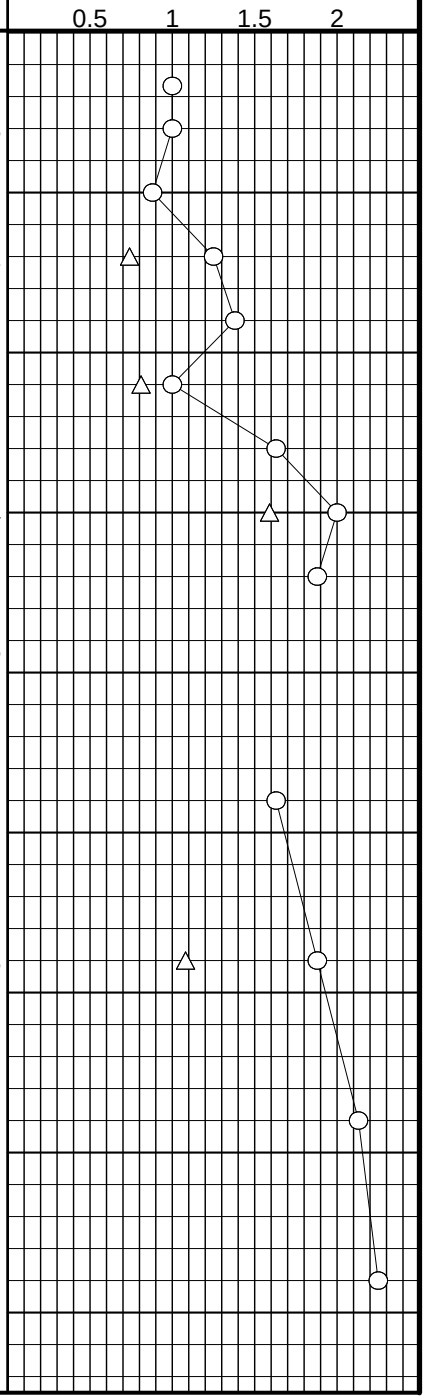

BORING DRILLED TO **25** FEET WITHOUT DRILLING FLUID

WATER ENCOUNTERED AT **25** FEET WHILE DRILLING

WATER LEVEL AT **18.8** FEET AFTER **24 HRS**

DRILLED BY **V&S** DRAFTED BY **CHL** LOGGED BY **BPJ**

AVILES ENGINEERING CORP. GEOTECHNICAL ENGINEERS

PROJECT: **Holcombe Drainage and Paving Improvements** BORING **B-3**

COH WBS No. **M-420126-0076-3** TYPE 4" Dry Auger DATE **10/1/14**

DESCRIPTION
Survey Coordinates (TSPC, Surface):
Easting: 3117236.72
Northing: 13822840.11
Elevation: 41.88

ELEVATION IN FEET	DEPTH IN FEET	DESCRIPTION	S.P.T. BLOWS / FT.	-200 MESH	DRY DENSITY, PCF	MOISTURE CONTENT, %	LIQUID LIMIT	PLASTIC LIMIT	PLASTICITY INDEX
	0	Pavement: 10.5" concrete							
		Base: 13.5" lime-stabilized clayey sand		26		46	85	22	63
		Stiff to hard, tan Fat Clay (CH), with slickensides			83	40			
		-with ferrous nodules 2'-8'							
		-red 4'-8'				41			
36	6			98	100	27	60	24	36
		-with red, brown, and gray 8'-12'				33			
		-with silt partings 10'-12'				30			
30	12	-red, with abundant silt seams 12'-14'				34			
		-light gray and reddish brown 14'-16'		90	100	25	68	21	47
		-tan and light gray 16'-18'				24			
24	18	-red and tan 18'-20'				27			
18	24	-tan 23'-25'		85	106	23	58	18	40
		-gray and tan 28'-30'				21			
12	30								
		-red, brown, and gray, with calcareous nodules 33'-35'			96	26			
6	36	Termination depth = 35 feet.							
0	42								

SHEAR STRENGTH, TSF

△ Confined Compression
● Unconfined Compression
○ Pocket Penetrometer
□ Torvane

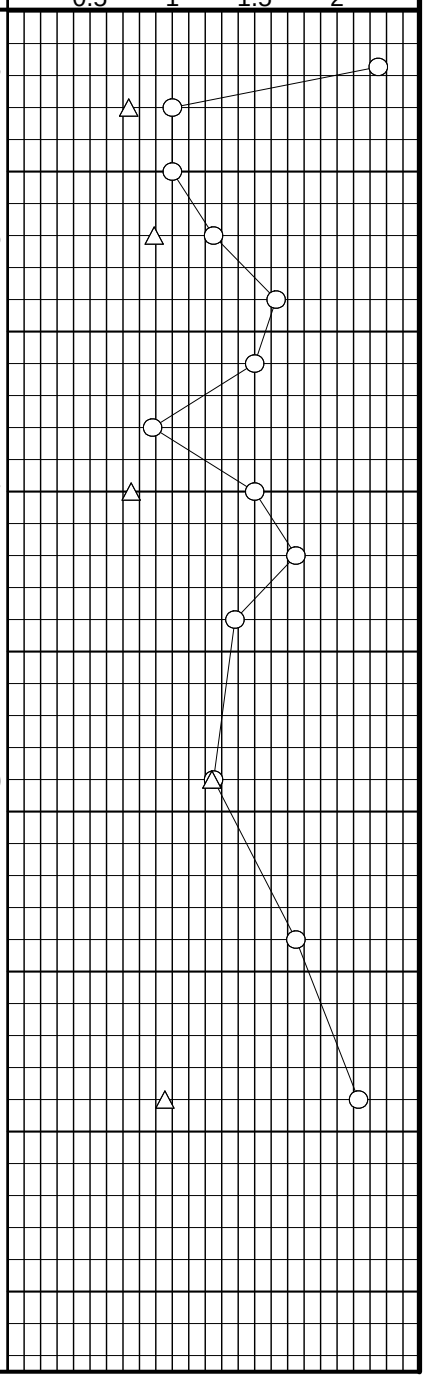

BORING DRILLED TO **35** FEET WITHOUT DRILLING FLUID
WATER ENCOUNTERED AT **N/A** FEET WHILE DRILLING
WATER LEVEL AT **N/A** FEET AFTER **COMPLETE**
DRILLED BY **V&S** DRAFTED BY **CHL** LOGGED BY **BPJ**

AVILES ENGINEERING CORP.
GEOTECHNICAL ENGINEERS

PROJECT: **Holcombe Drainage and Paving Improvements** BORING **B-4**

COH WBS No. **M-420126-0076-3** TYPE 4" Dry Auger DATE **10/1/14**

ELEVATION IN FEET	DEPTH IN FEET	SYMBOL	SAMPLE INTERVAL	DESCRIPTION	S.P.T. BLOWS / FT.	-200 MESH	DRY DENSITY, PCF	MOISTURE CONTENT, %	LIQUID LIMIT	PLASTIC LIMIT	PLASTICITY INDEX
				Survey Coordinates (TSPC, Surface): *Easting: 3117777.74* *Northing: 13822622.31* *Elevation: 41.69*							
	0			Pavement: 10.5" concrete							
				Base: 7" stabilized sand				48			
				Firm to very stiff, dark gray Fat Clay (CH), with slickensides		96	79	43	98	32	66
				-gray and olive, with ferrous nodules 2'-6'				42			
36	6			-red and gray, with calcareous nodules 6'-8'				31			
				-dark tan 8'-10'		99	88	37	80	30	50
				-gray and tan 10'-14'				25			
30	12							19			
				Very stiff to hard, tan Lean Clay w/Sand (CL)				14			
				-with silty sand pockets 14'-18' -gray and tan, with calcareous nodules 16'-25'		73	119	15	36	13	23
24	18						121	13			
18	24			-with vertical silty sand seams 23'-25'				17			
				Light gray Silty Sand (SM), with clay pockets		22		13	23	21	2
12	30			Termination depth = 30 feet.							
6	36										
0	42										

SHEAR STRENGTH, TSF

△ Confined Compression
● Unconfined Compression
○ Pocket Penetrometer
□ Torvane

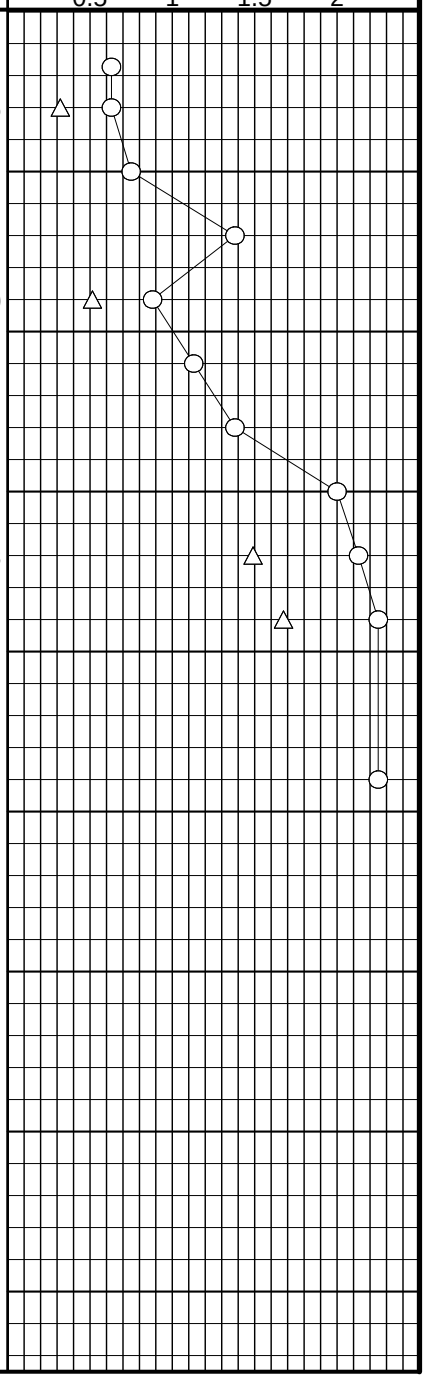

BORING DRILLED TO **30** FEET WITHOUT DRILLING FLUID
WATER ENCOUNTERED AT **N/A** FEET WHILE DRILLING
WATER LEVEL AT **N/A** FEET AFTER **COMPLETE**
DRILLED BY **V&S** DRAFTED BY **CHL** LOGGED BY **RJM**

PROJECT: **Holcombe Drainage and Paving Improvements**

AVILES ENGINEERING CORP. GEOTECHNICAL ENGINEERS

BORING **B-5**

COH WBS No. **M-420126-0076-3** TYPE 4" Dry Auger DATE **10/1/14**

ELEVATION IN FEET	DEPTH IN FEET	SYMBOL	SAMPLE INTERVAL	DESCRIPTION *Survey Coordinates (TSPC, Surface):* *Easting: 3117577.01* *Northing: 13822436.10* *Elevation: 44.02*	S.P.T. BLOWS / FT.	-200 MESH	DRY DENSITY, PCF	MOISTURE CONTENT, %	LIQUID LIMIT	PLASTIC LIMIT	PLASTICITY INDEX
	0			Pavement: 5.5" aspahlt							
				Base: 18.5" stabilized sand and crushed shell				7			
42				Fill: Brown Clayey Sand (SC), with crushed shell and gravel		30		17	45	18	27
	6			Firm to very stiff, dark gray Fat Clay (CH), with slickensides and ferrous nodules			76	44			
				-olive and dark gray 6'-8'		98		40	101	32	69
36				-red and tan, with calcareous nodules 8'-10'				30			
				Termination depth = 10 feet.							
	12										
30											
	18										
24											
	24										
18											
	30										
12											
	36										
6											
	42										

SHEAR STRENGTH, TSF

△ Confined Compression
● Unconfined Compression
○ Pocket Penetrometer
□ Torvane

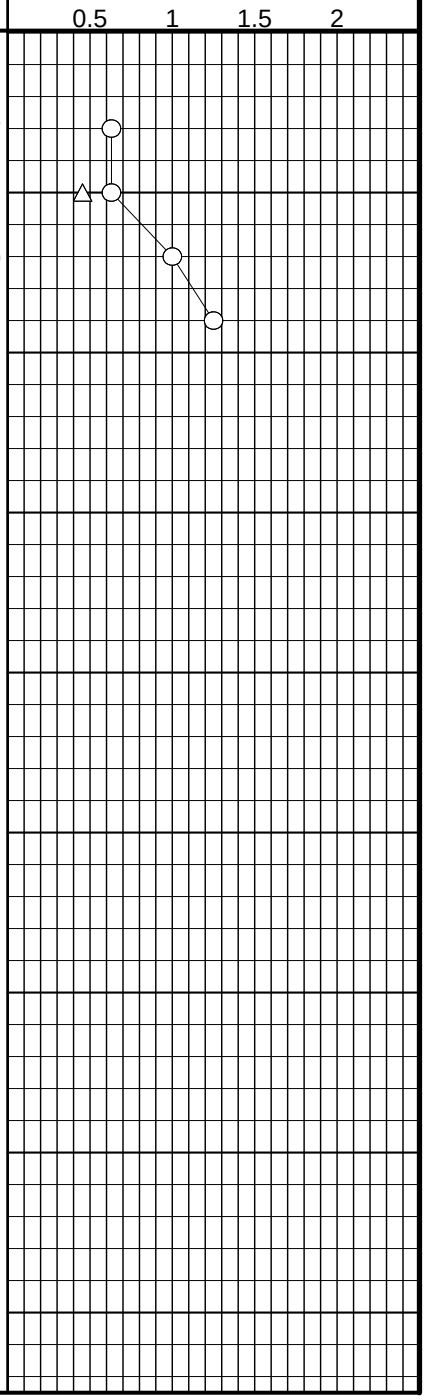

BORING DRILLED TO **10** FEET WITHOUT DRILLING FLUID

WATER ENCOUNTERED AT **N/A** FEET WHILE DRILLING

WATER LEVEL AT **N/A** FEET AFTER **COMPLETE**

DRILLED BY **V&S** DRAFTED BY **CHL** LOGGED BY **RJM**

AVILES ENGINEERING CORP. GEOTECHNICAL ENGINEERS

PROJECT: **Holcombe Drainage and Paving Improvements** BORING **B-6**

COH WBS No. **M-420126-0076-3** TYPE 4" Dry Auger DATE **10/1/14**

DESCRIPTION

Survey Coordinates (TSPC, Surface):

Easting: 3117673.11

Northing: 13822802.18

Elevation: 41.66

ELEVATION IN FEET	DEPTH IN FEET	SYMBOL	SAMPLE INTERVAL	DESCRIPTION	S.P.T. BLOWS / FT.	-200 MESH	DRY DENSITY, PCF	MOISTURE CONTENT, %	LIQUID LIMIT	PLASTIC LIMIT	PLASTICITY INDEX
	0			Pavement: 7" asphalt							
				Base: 2" sand, limestone fragments, and shell				36			
				Stiff to very stiff, dark brown and olive gray Fat Clay (CH), with slickensides			87	35			
36	6			-dark brown and olive gray 2'-4'		96		37	85	30	55
				-dark tan, with calcareous and ferrous nodules 4'-6'				29			
				-red and tan 6'-12'				32			
30	12					100		32	78	27	51
				-dark tan, with silt pockets and vertical silt seams and partings			95	31			
				-tan, red, and light gray 14'-16'				32			
				-dark tan 16'-20', with calcareous nodules 16'-25'				29			
24	18					94		29	72	23	49
18	24			-gray and olive gray 23'-25'			102	25			
				Light tan and gray Clayey Sand (SC), with silty sand and silt pockets, and ferrous nodules							
12	30					26		16	31	17	14
				Termination depth = 30 feet.							
6	36										
0	42										

SHEAR STRENGTH, TSF

△ Confined Compression
● Unconfined Compression
○ Pocket Penetrometer
□ Torvane

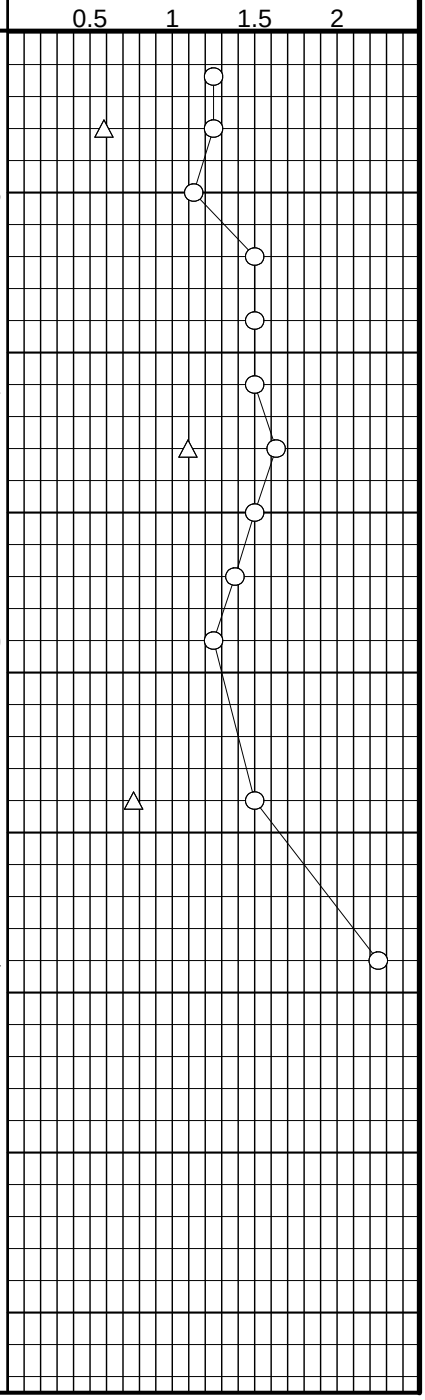

BORING DRILLED TO **30** FEET WITHOUT DRILLING FLUID

WATER ENCOUNTERED AT **N/A** FEET WHILE DRILLING

WATER LEVEL AT **N/A** FEET AFTER **COMPLETE**

DRILLED BY **V&S** DRAFTED BY **CHL** LOGGED BY **RJM**

AVILES ENGINEERING CORP.
GEOTECHNICAL ENGINEERS

PROJECT: **Holcombe Drainage and Paving Improvements** BORING **B-7**

COH WBS No. **M-420126-0076-3** TYPE 4" Dry Auger DATE **10/1/14**

ELEVATION IN FEET	DEPTH IN FEET	SYMBOL	SAMPLE INTERVAL	DESCRIPTION *Survey Coordinates (TSPC, Surface):* *Easting: 3117775.44* *Northing: 13823216.00* *Elevation: 43.68*	S.P.T. BLOWS / FT.	-200 MESH	DRY DENSITY, PCF	MOISTURE CONTENT, %	LIQUID LIMIT	PLASTIC LIMIT	PLASTICITY INDEX
	0			Pavement: 13.5" asphalt							
42				Base: 5" stabilized sand and crushed shell		96		39	99	30	69
				Stiff to very stiff, dark brown Fat Clay (CH), with slickensides			88	33			
				-dark olive 2'-4'							
				-olive 4'-8', with ferrous nodules 4'-10'				34			
	6			-with calcareous nodules 6'-10'							
36				-tan and red 8'-10'		94		36	90	30	60
								31			
				Termination depth = 10 feet.							
	12										
30											
	18										
24											
	24										
18											
	30										
12											
	36										
6											
	42										

SHEAR STRENGTH, TSF

△ Confined Compression
● Unconfined Compression
○ Pocket Penetrometer
□ Torvane

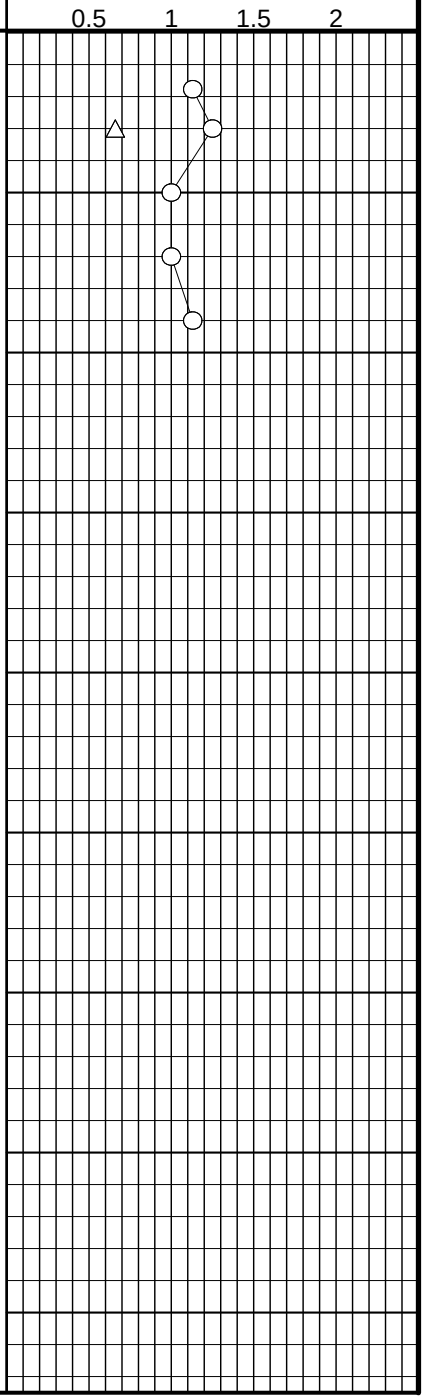

BORING DRILLED TO **10** FEET WITHOUT DRILLING FLUID
WATER ENCOUNTERED AT **N/A** FEET WHILE DRILLING
WATER LEVEL AT **N/A** FEET AFTER **COMPLETE**
DRILLED BY **V&S** DRAFTED BY **CHL** LOGGED BY **RJM**

KEY TO SYMBOLS

Symbol	Description
Strata symbols	
	Paving
	Fill
	High plasticity clay
	Low plasticity clay
	Silt
	Silty sand
	Clayey sand
Misc. Symbols	
○	Pocket Penetrometer
△	Confined Compression
	Water table depth during drilling
	Subsequent water table depth
Soil Samplers	
	Rock core
	Auger
	Undisturbed thin wall Shelby tube

Symbol	Description
	Standard penetration test

AYLES ENGINEERING CORP.

CLASSIFICATION OF SOILS FOR ENGINEERING PURPOSES

ASTM Designation D-2487

MAJOR DIVISIONS				GROUP SYMBOL	TYPICAL NAMES
COARSE-GRAINED SOILS (Less than 50% passes No. 200 sieve)	GRAVELS (Less than 50% of coarse fraction passes No. 4 sieve)	CLEAN GRAVELS (Less than 5% passes No. 200 sieve)		GW	Well-graded gravel, well-graded gravel with sand
				GP	Poorly-graded gravel, poorly-graded gravel with sand
		GRAVELS WITH FINES (More than 12% passes No. 200 sieve)	Limits plot below "A" line & hatched zone on plasticity chart	GM	Silty gravel, silty gravel with sand
			Limits plot above "A" line & hatched zone on plasticity chart	GC	Clayey gravel, clayey gravel with sand
	SANDS (50% or more of coarse fraction passes No. 4 sieve)	CLEAN SANDS (Less than 5% passes No. 200 sieve)		SW	Well-graded sand, well-graded sand with gravel
				SP	Poorly-graded sand, poorly-graded sand with gravel
		SANDS WITH FINES (More than 12% passes No. 200 sieve)	Limits plot below "A" line & hatched zone on plasticity chart	SM	Silty sand, silty sand with gravel
			Limits plot above "A" line & hatched zone on plasticity chart	SC	Clayey sand, clayey sand with gravel
FINE-GRAINED SOILS (50% or more passes No. 200 sieve)		SILTS AND CLAYS (Liquid Limit Less Than 50%)		ML	Silt, silt with sand, silt with gravel, sandy silt, gravelly silt
				CL	Lean clay, lean clay with sand, lean clay with gravel, sandy lean clay, gravelly lean clay
				OL	Organic clay, organic clay with sand, sandy organic clay, organic silt, sandy organic silt
		SILTS AND CLAYS (Liquid Limit 50% or More)		MH	Elastic silt, elastic silt with sand, sandy elastic silt, gravelly elastic silt
				CH	Fat clay, fat clay with sand, fat clay with gravel, sandy fat clay, gravelly fat clay
				OH	Organic clay, organic clay with sand, sandy organic clay, organic silt, sandy organic silt

NOTE: Coarse soils between 5% and 12% passing the No. 200 sieve and fine-grained soils with limits plotting in the hatched zone of the plasticity chart are to have dual symbols.

PLASTICITY CHART

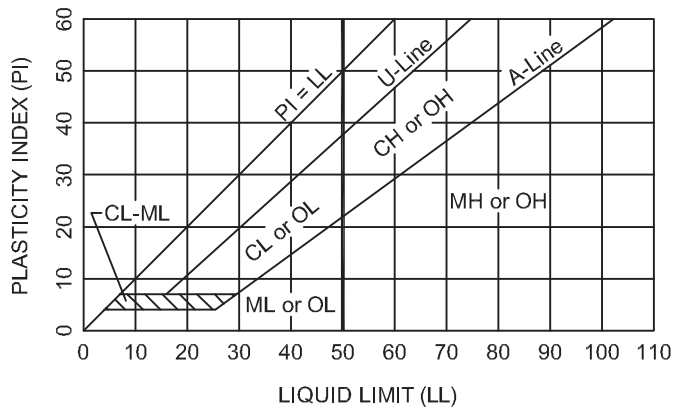

Equation of A-Line: Horizontal at PI=4 to LL=25.5, then PI=0.73(LL-20)

Equation of U-Line: Vertical at LL=16 to PI=7, then PI=0.9(LL-8)

DEGREE OF PLASTICITY OF COHESIVE SOILS

Degree of Plasticity	Plasticity Index
None	0 - 4
Slight	5 - 10
Medium	11 - 20
High	21 - 40
Very High	>40

SOIL SYMBOLS

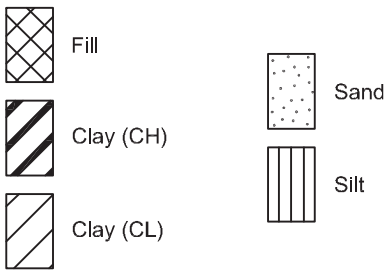

AYLES ENGINEERING CORP.

TERMS USED ON BORING LOGS

SOIL GRAIN SIZE

U.S. STANDARD SIEVE

6"	3"	3/4"	#4	#10	#40	#200	
BOULDERS	COBBLES	GRAVEL		SAND		SILT	CLAY
		COARSE	FINE	COARSE	MEDIUM	FINE	
152	76.2	19.1	4.76	2.00	0.420	0.074	0.002

SOIL GRAIN SIZE IN MILLIMETERS

STRENGTH OF COHESIVE SOILS

Consistency	Undrained Shear Strength, Kips per Sq. ft.
Very Soft	less than 0.25
Soft	0.25 to 0.50
Firm	0.50 to 1.00
Stiff	1.00 to 2.00
Very Stiff	2.00 to 4.00
Hard	greater than 4.00

RELATIVE DENSITY OF COHESIONLESS SOILS FROM STANDARD PENETRATION TEST

Very Loose	<4 bpf
Loose	5-10 bpf
Medium Dense	11-30 bpf
Dense	31-50 bpf
Very Dense	>50 bpf

SPLIT-BARREL SAMPLER DRIVING RECORD

Blows per Foot	Description
25	25 blows driving sampler 12 inches, after initial 6 inches of seating.
50/7"	50 blows driving sampler 7 inches, after initial 6 inches of seating.
Ref/3"	50 blows driving sampler 3 inches, during initial 6-inches seating interval.

NOTE: To avoid change to sampling tools, driving is limited to 50 blows during or after seating interval.

DRY STRENGTH ASTM D2488

None	Dry specimen crumbles into powder with mere pressure of handling
Low	Dry specimen crumbles into powder with some finger pressure
Medium	Dry specimen breaks into pieces or crumbles with considerable pressure
High	Dry specimen cannot be broken with finger pressure, it can be broken between thumb and hard surface
Very High	Dry specimen cannot be broken between thumb and hard surface

MOISTURE CONDITION ASTM D2488

Dry	Absence of moisture, dusty, dry to the touch
Moist	Damp but no visible water
Wet	Visible free water

SOIL STRUCTURE

Slickensided	Having planes of weakness that appear slick and glossy. The degree of slickensidedness depends upon the spacing of slickensides and the easiness of breaking along these planes.
Fissured	Containing shrinkage or relief cracks, often filled with fine sand or silt; usually more or less vertical.
Pocket	Inclusion of material of different texture that is smaller than the diameter of the sample.
Parting	Inclusion less than 1/8 inch thick extending through the sample.
Seam	Inclusion 1/8 inch to 3 inches thick extending through the sample.
Layer	Inclusion greater than 3 inches thick extending through the sample.
Laminated	Soil sample composed of alternating partings or seams of different soil types.
Interlayered	Soil sample composed of alternating layers of different soil types.
Intermixed	Soil sample composed of pockets of different soil types and layered or laminated structure is not evident.
Calcareous	Having appreciable quantities of calcium material.

AVILES ENGINEERING CORP.

ASTM & TXDOT DESIGNATION FOR SOIL LABORATORY TESTS

NAME OF TEST	ASTM TEST DESIGNATION	TXDOT TEST DESIGNATION
Moisture Content	D 2216	Tex-103-E
Specific Gravity	D 854	Tex-108-E
Sieve Analysis	D 421 D 422	Tex-110-E (Part 1)
Hydrometer Analysis	D 422	Tex-110-E (Part 2)
Minus No. 200 Sieve	D 1140	Tex-111-E
Liquid Limit	D 4318	Tex-104-E
Plastic Limit	D 4318	Tex-105-E
Shrinkage Limit	D 427	Tex-107-E
Standard Proctor Compaction	D 698	Tex-114-E
Modified Proctor Compaction	D 1557	Tex-113-E
Permeability (constant head)	D 2434	-
Consolidation	D 2435	-
Direct Shear	D 3080	-
Unconfined Compression	D 2166	-
Unconsolidated-Undrained Triaxial	D 2850	Tex-118-E
Consolidated-Undrained Triaxial	D 4767	Tex-131-E
Pinhole Test	D 4647	-
California Bearing Ratio	D 1883	-
Unified Soil Classification System	D 2487	Tex-142-E

SUMMARY OF LABORATORY TEST RESULTS

BORING NO.	TOP OF SAMPLE/ STRATA DEPTH (ft)	SAMPLE TYPE	BLOW COUNT	WATER CONTENT (%)	DRY DENSITY (pcf)	INDEX PROPERTIES				SHEAR STRENGTH (PSF)		USCS CLASSIFICA-TION
						PERCENT PASSING SIEVE NO. 200	LL	PI	PL	UU TEST	POCKET PENETRO-METER	
B-1	0	r										
	0.833											
	1.667	a		36		76	81	54	27			ch
	2	c		30							0.75	ch
	4	c		33	88					0.49	0.88	ch
	6	c		38							1	ch
	8	c		31	93	87	47	31	16	0.575	1.13	cl
	10	c		19		62						ml
	12											ch
	12.5	p	14	24								ch
	14	c		24							2.25	ch
	16	c		28	94					0.69	1.75	ch
	18	c		30							1.63	ch
	23	c		28	96	95	73	50	23	0.46	1.38	ch
	28	c		20							1.5	ch
	33	c		23	104	94	62	42	20	1.4	2.25	ch
	38	c		33							1.88	ch
B-2	0	r										
	0.833	r										
	1.333	c		33							1	ch
	2	c		32		94	78	53	25		1	ch
	4	c		38							0.88	ch
	6	c		32	92	99	62	41	21	0.74	1.25	ch
	8	c		37							1.38	ch
	10	c		29	95					0.81	1	ch
	12	c		17							1.63	cl
	14	c		17	116	70	37	24	13	1.59	2	cl
	16	c		19							1.88	cl
	18.5	p	34	21		66						cl
	23	c		28							1.63	ch
	28	c		26	100	95	64	43	21	1.08	1.88	ch
	33	c		29							2.13	ch
	38	c		29							2.25	ch

SUMMARY OF LABORATORY TEST RESULTS

BORING NO.	TOP OF SAMPLE/ STRATA DEPTH (ft)	SAMPLE TYPE	BLOW COUNT	WATER CONTENT (%)	DRY DENSITY (pcf)	INDEX PROPERTIES				SHEAR STRENGTH (PSF)		USCS CLASSIFICA-TION
						PERCENT PASSING SIEVE NO. 200	LL	PI	PL	UU TEST	POCKET PENETRO-METER	
B-3	0	r										
	0.875	r										
	1.458	c		46		26	85	63	22		2.25	
	2	c		40	83					0.735	1	ch
	4	c		41							1	ch
	6	c		27	100	98	60	36	24	0.89	1.25	ch
	8	c		33							1.63	ch
	10	c		30							1.5	ch
	12	c		34							0.88	ch
	14	c		25	100	90	68	47	21	0.75	1.5	ch
	16	c		24							1.75	ch
	18	c		27							1.38	ch
	23	c		23	106	85	58	40	18	1.24	1.25	ch
	28	c		21							1.75	ch
	33	c		26	96					0.955	2.13	ch
B-4	0	r										
	0.875	r										
	1.458	c		48							0.63	ch
	2	c		43	79	96	98	66	32	0.32	0.63	ch
	4	c		42							0.75	ch
	6	c		31							1.38	ch
	8	c		37	88	99	80	50	30	0.515	0.88	ch
	10	c		25							1.13	ch
	12	c		19							1.38	ch
	14	c		14							2	cl
	16	c		15	119	73	36	23	13	1.49	2.13	cl
	18	c		13	121					1.675	2.25	cl
	23	c		17							2.25	cl
	28	c		13		22	23	2	21			sm

SUMMARY OF LABORATORY TEST RESULTS

BORING NO.	TOP OF SAMPLE/ STRATA DEPTH (ft)	SAMPLE TYPE	BLOW COUNT	WATER CONTENT (%)	DRY DENSITY (pcf)	INDEX PROPERTIES				SHEAR STRENGTH (PSF)		USCS CLASSIFICA-TION
						PERCENT PASSING SIEVE NO. 200	LL	PI	PL	UU TEST	POCKET PENETRO-METER	
B-5	0	a										
	0.458	a										
	0.875	c		7								
	2	c		17		30	45	27	18		0.63	
	4	c		44	76					0.455	0.63	ch
	6	c		40		98	101	69	32		1	ch
	8	c		30							1.25	ch
B-6	0	a										
	0.583	a										
	0.75	c		36							1.25	ch
	2	c		35	87					0.585	1.25	ch
	4	c		37		96	85	55	30		1.13	ch
	6	c		29							1.5	ch
	8	c		32							1.5	ch
	10	c		32		100	78	51	27		1.5	ch
	12	c		31	95					1.095	1.63	ch
	14	c		32							1.5	ch
	16	c		29							1.38	ch
	18	c		29		94	72	49	23		1.25	ch
	23	c		25	102					0.765	1.5	ch
	26											sc
	28	c		16		26	31	14	17		2.25	sc
B-7	0	a										
	1.125	a										
	1.542	c		39		96	99	69	30		1.13	ch
	2	c		33	88					0.66	1.25	ch
	4	c		34							1	ch
	6	c		36		94	90	60	30		1	ch
	8	c		31							1.13	ch

Notes: (1) r = Coring; a = Auger Cuttings; c = Shelby Tube Sample; p = Split Spoon Sample;
(2) LL = Liquid Limit; PL = Plastic Limit; PI = Plasticity Index; UU = Unconsolidated-Undrained Triaxial Test;
(3) ch = fat clay; cl = lean clay; sc = clayey sand; sm = silty sand; and ml = silt.

AVILES ENGINEERING CORP.

APPENDIX B

Plate B-1	Generalized Soil Profiles
Plate B-2	Piezometer Details

GENERALIZED SUBSURFACE SOIL PROFILE

ALONG HOLCOMBE

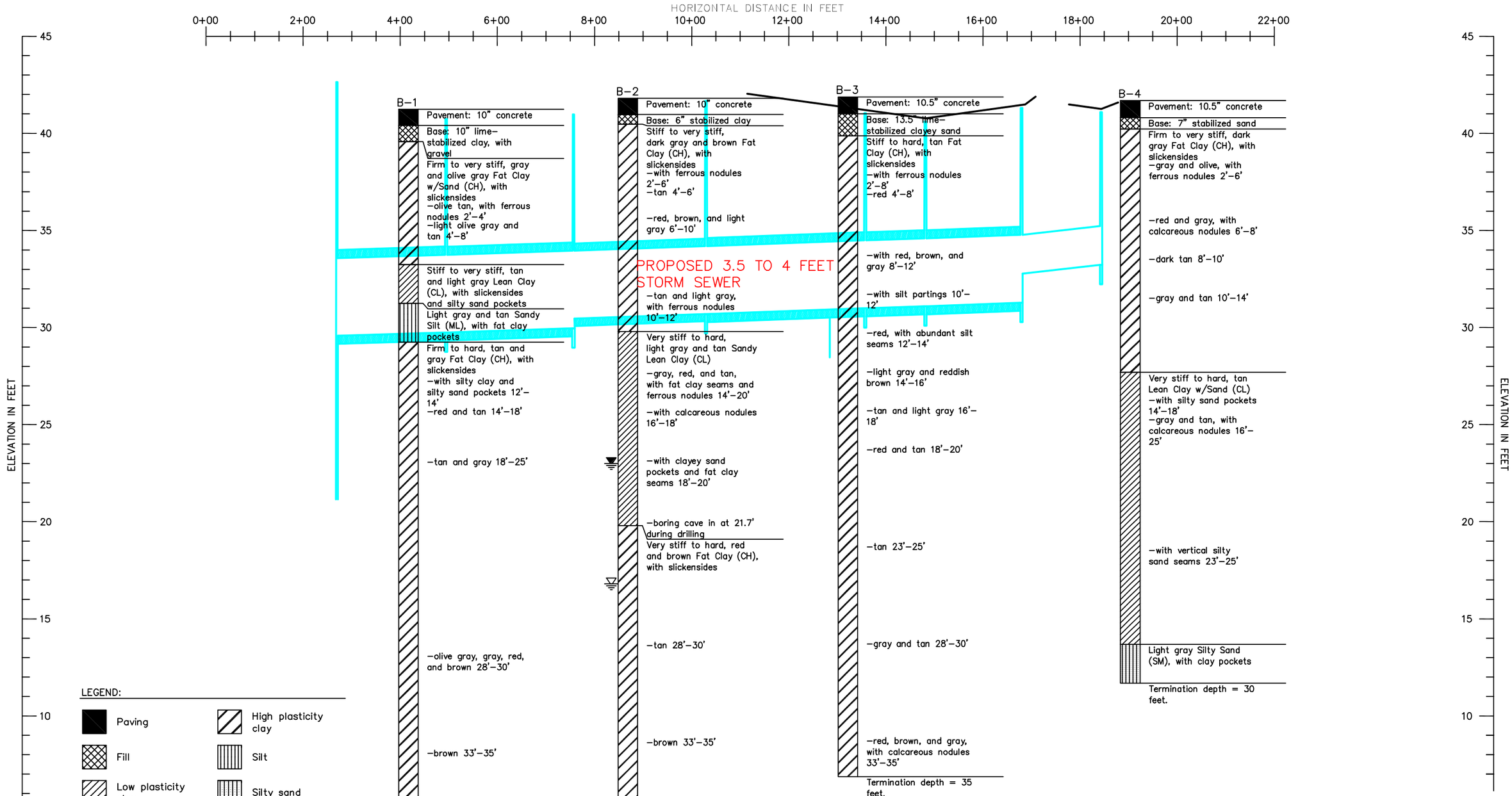

Note: Soil stratigraphy and secondary soil structure (such as seams, layers, or pockets of sands, silts, slickensides, and fissures) that are different from what were identified in the actual borings may exist away from these borings.

AVILES ENGINEERING CORPORATION

GENERALIZED SOIL PROFILE

HOLCOMBE DRAINAGE AND PAVING IMPROVEMENTS

HOUSTON, TEXAS

AEC PROJECT NO.: G154-14	DATE: 10-31-14	SOURCE DRAWING PROVIDED BY: AVILES ENGINEERING CORP.
VERTICAL SCALE: 1" = 5' HORIZONTAL SCALE: 1" = 200'	DRAFTED BY: BpJ	PLATE NO.: PLATE B-1

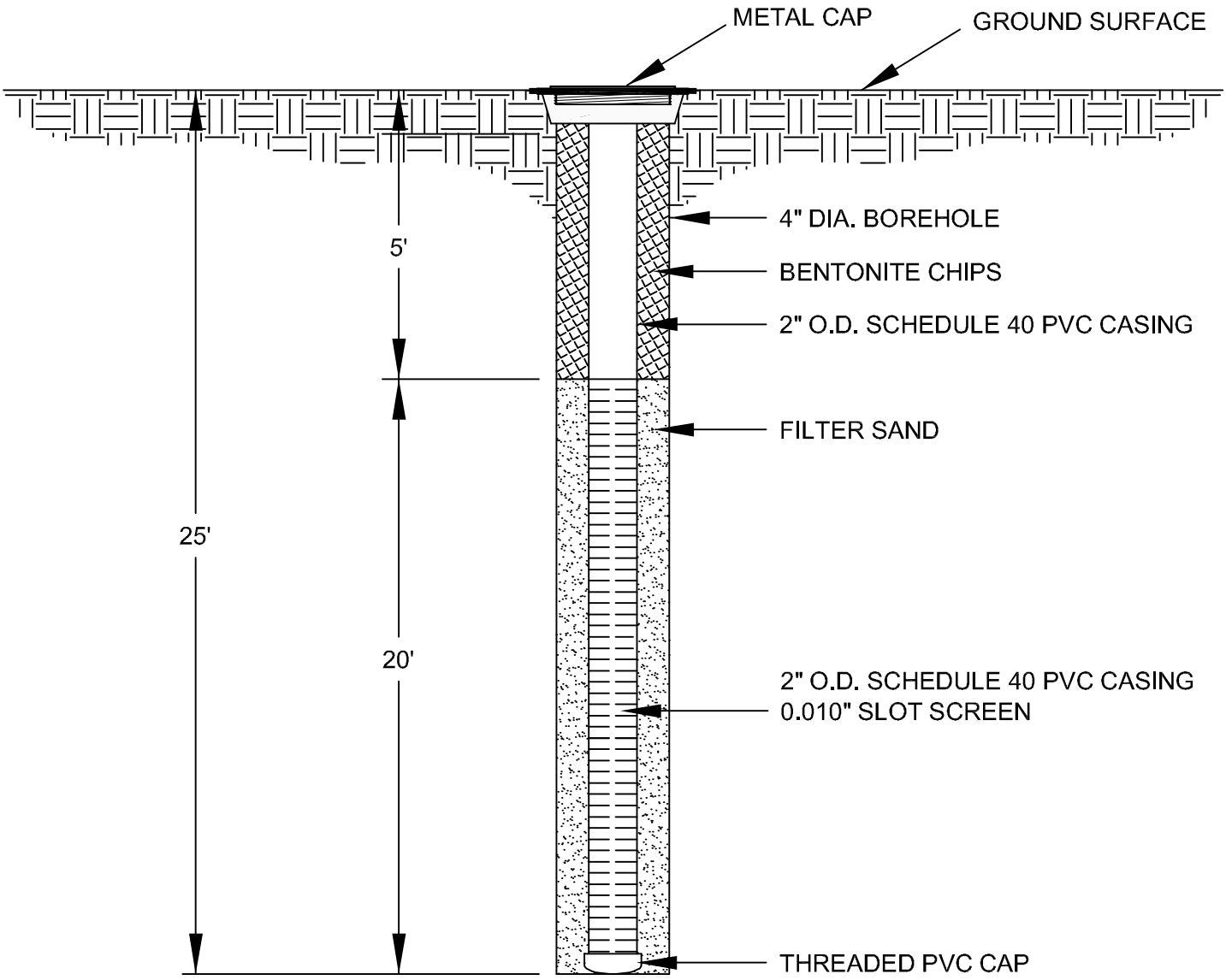

GROUNDWATER DEPTH FROM SURFACE:	DATE MEASURED:
18.8 ft	10/2/14
19.4 ft	11/4/14

AVILES ENGINEERING CORPORATION

PIEZOMETER INSTALLATION DETAILS
BORING B-2 (PZ-1)

HOLCOMBE DRAINAGE AND PAVING IMPROVEMENTS
HOUSTON, TEXAS

AEC PROJECT NO.:	DATE:	SOURCE DWG. BY:
G154-14	11-5-14	AVILES ENGINEERING CORP.
SCALE: N.T.S.	DRAWN BY: BpJ	PLATE NO.: PLATE B-2

AVILES ENGINEERING CORP.

APPENDIX C

Plates C-1a & C-1b	Recommended Geotechnical Design Parameters
Plate C-2	Load Coefficients for Pipe Loading
Plate C-3	Live Loads on Pipe Crossing Under Roadway

SOIL PARAMETERS FOR UNDERGROUND UTILITIES

Boring	Depth (ft)	Soil Type	γ (pcf)	γ' (pcf)	OSHA Type	Short-Term					Long-Term				
						C (psf)	φ (deg)	K_a	K_0	K_p	C' (psf)	φ' (deg)	K_a	K_0	K_p
B-1	0-10	Firm to very stiff CH/CL	122	60	B	1000	0	1.00	1.00	1.00	100	16	0.57	0.72	1.76
	10-12	ML	120	58	C	0	26	0.39	0.56	2.56	0	26	0.39	0.56	2.56
	12-22	Stiff to hard CH	120	58	B (12-20)	1400	0	1.00	1.00	1.00	150	16	0.57	0.72	1.76
	22-32	Firm to very stiff CH	123	61	N/A	900	0	1.00	1.00	1.00	100	16	0.57	0.72	1.76
	32-40	Very stiff to hard CH	128	66	N/A	2800	0	1.00	1.00	1.00	275	16	0.57	0.72	1.76
B-2	0-12	Stiff to very stiff CH	123	61	B	1400	0	1.00	1.00	1.00	150	16	0.57	0.72	1.76
	12-18	Very stiff to hard CL	136	74	B	3200	0	1.00	1.00	1.00	300	18	0.53	0.69	1.89
	18-40	Very stiff to hard CL/CH	126	64	C* (18-20)	2200	0	1.00	1.00	1.00	225	16	0.57	0.72	1.76
B-3	0-22	Stiff to hard CH	127	65	B (0-20)	1400	0	1.00	1.00	1.00	150	16	0.57	0.72	1.76
	22-26	Very stiff CH	130	68	N/A	2500	0	1.00	1.00	1.00	250	16	0.57	0.72	1.76
	26-35	Stiff to hard CH	121	59	N/A	1900	0	1.00	1.00	1.00	200	16	0.57	0.72	1.76
B-4	0-8	Firm to very stiff CH	113	51	B	600	0	1.00	1.00	1.00	50	16	0.57	0.72	1.76
	8-14	Stiff to very stiff CH	121	59	B	1000	0	1.00	1.00	1.00	100	16	0.57	0.72	1.76
	14-28	Very stiff to hard CL	137	75	B (14-20)	3000	0	1.00	1.00	1.00	300	18	0.53	0.69	1.89
	28-30	SM	120	58	N/A	0	26	0.39	0.56	2.56	0	26	0.39	0.56	2.56

SOIL PARAMETERS FOR UNDERGROUND UTILITIES

Boring	Depth (ft)	Soil Type	γ (pcf)	γ' (pcf)	OSHA Type	Short-Term					Long-Term				
						C (psf)	φ (deg)	K_a	K_0	K_p	C' (psf)	φ' (deg)	K_a	K_0	K_p
B-6	0-10	Stiff to very stiff CH	117	55	B	1200	0	1.00	1.00	1.00	125	16	0.57	0.72	1.76
	10-16	Very stiff CH	124	62	B	2200	0	1.00	1.00	1.00	225	16	0.57	0.72	1.76
	16-26	Stiff to very stiff CH	128	66	B (16-20)	1500	0	1.00	1.00	1.00	150	16	0.57	0.72	1.76
	26-30	SC	120	58	C	0	26	0.39	0.56	2.56	0	26	0.39	0.56	2.56

(1) γ = Unit weight for soil above water level, γ′ = Buoyant unit weight for soil below water level. E'n = Soil modulus for native soils;

(2) C = Soil ultimate cohesion for short term (upper limit of 3,600 psf for design purposes), φ = Soil friction angle for short term;

(3) C' = Soil ultimate cohesion for long term (upper limit of 300 psf for design purposes), φ' = Soil friction angle for long term;

(4) K_a = Coefficient of active earth pressure, K_0 = Coefficient of at-rest earth pressure, K_p = Coefficient of passive earth pressure;

(5) CL = Lean Clay, and CH = Fat Clay; SC = Clayey Sand; SM = Silty Sand; ML = Silt

(6) OSHA Soil Types for soils in the top 20 feet below grade:

A: cohesive soils with qu = 1.5 tsf or greater (qu = Unconfined Compressive Strength of the Soil)

B: cohesive soils with qu = 0.5 tsf or greater

C: cohesive soils with qu = less than 0.5 tsf, fill materials, or granular soil

C*: submerged cohesive soils; dewatered cohesive soils can be considered OSHA Type C.

AVILES ENGINEERING CORP.

APPENDIX D

Plate D-1	Critical Heights of Cuts in Nonfissured Clays
Plate D-2	Maximum Allowable Slopes
Plate D-3	A Combination of Bracing and Open Cuts
Plate D-4	Lateral Pressure Diagrams for Open Cuts in Cohesive Soil-Long Term Conditions
Plate D-5	Lateral Pressure Diagrams for Open Cuts in Cohesive Soil-Short Term Conditions
Plate D-6	Lateral Pressure Diagrams for Open Cuts in Sand
Plate D-7	Bottom Stability for Braced Excavation in Clay
Plate D-8	Buoyant Uplift Resistance for Buried Structures

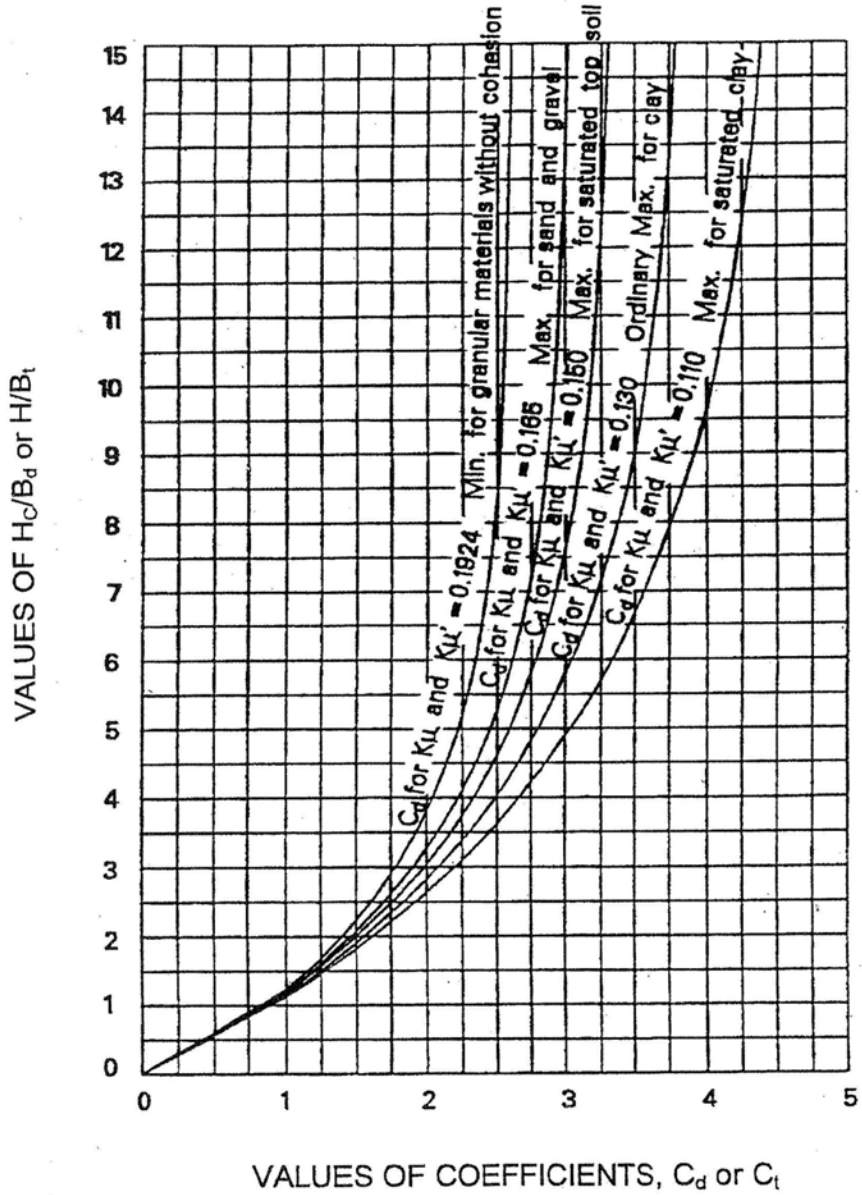

Reference: US Army Corps of Engineers Engineering Manual, EM 1110-2-2902, Oct. 31, 1997, Figure 2-5.

AVILES ENGINEERING CORP.

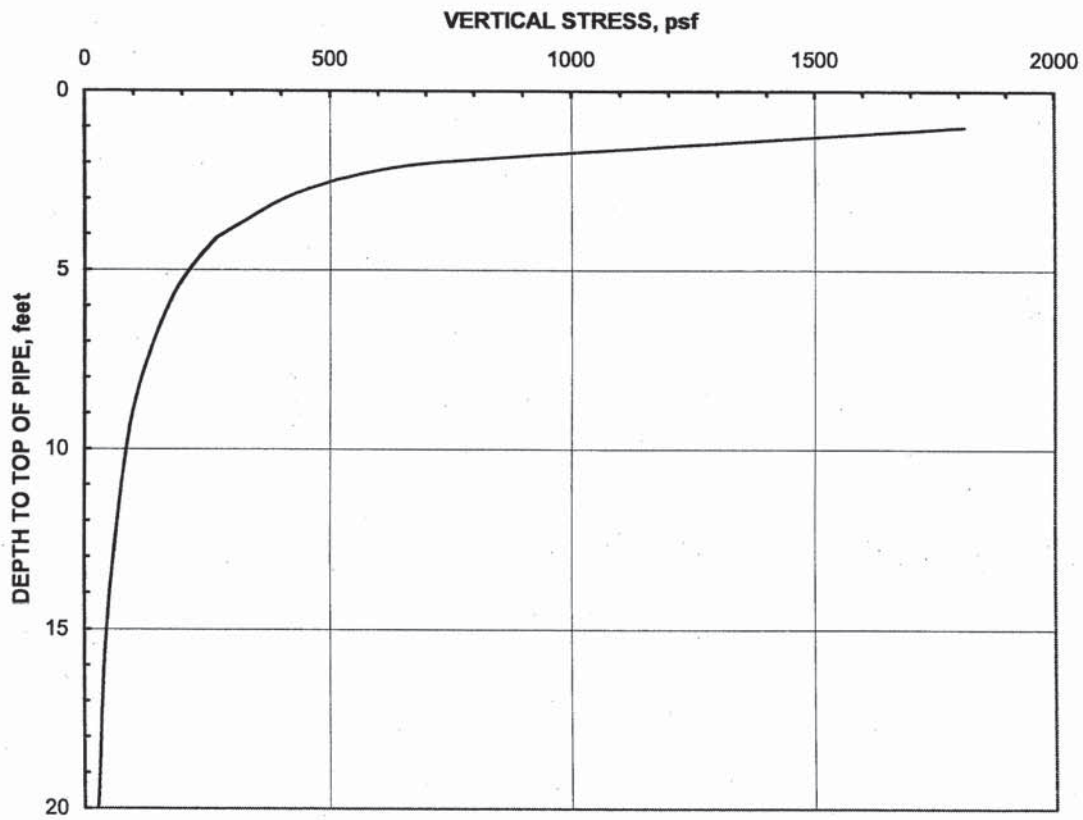

LIVE LOADS ON PIPE CROSSING UNDER ROADWAY

Note: 1. The vertical stress was estimated using AASHTO HS20 truck axle loadings on paved surfaces (Reference: ASCE 15-98, "Standard Practice for Direct Design of Buried Precast Concrete Pipe Using Standandard Installations").
2. Single truck passing.

AYLES ENGINEERING CORP.

Critical Heights of Cut Slopes in Nonfissured Clays

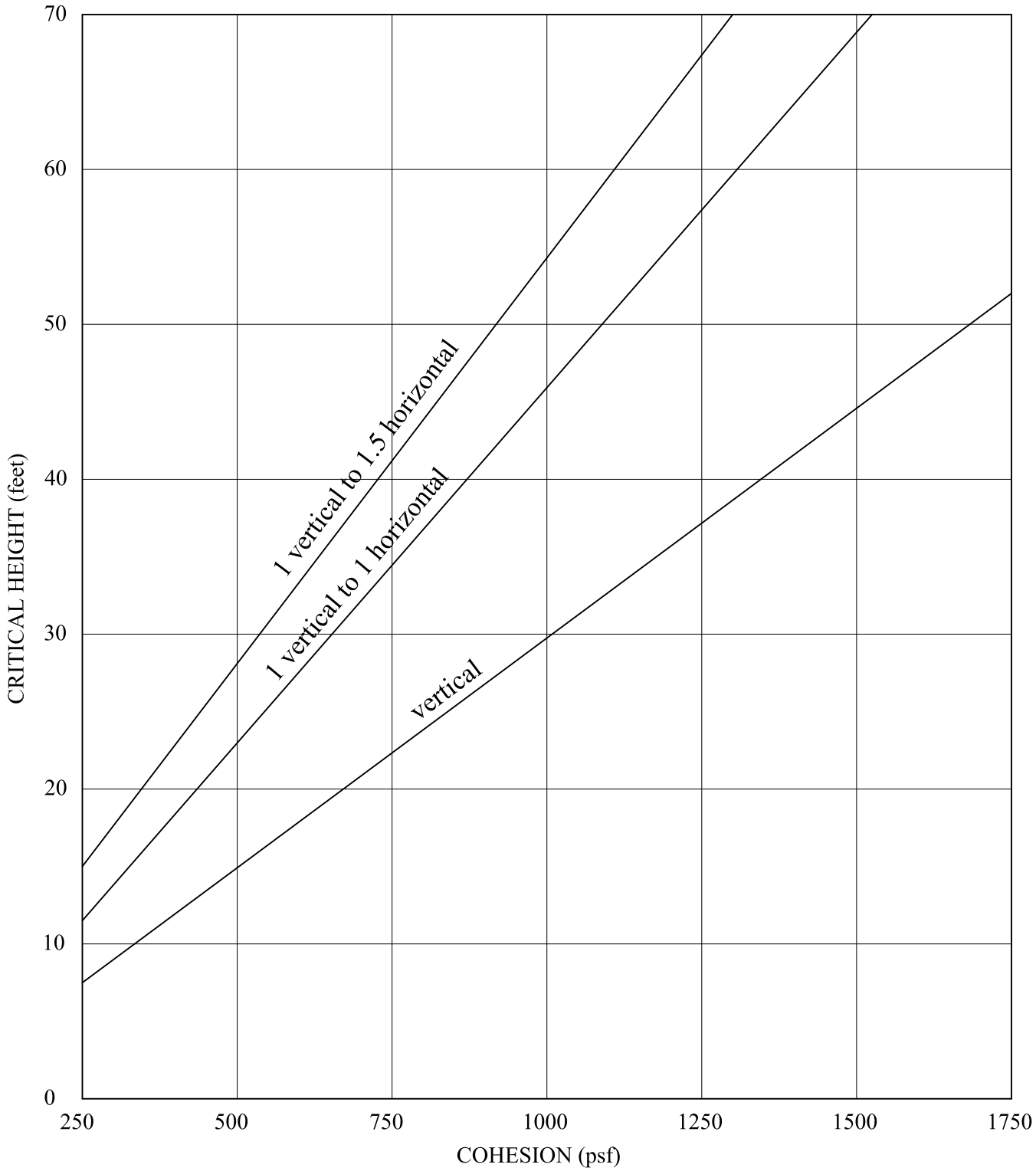

Note: The charts are calculated based on NAVFAC DM7.1, Page 7.1-319, assuming the critical circles are toe circles, and wet unit weight of soils = 125pcf.

AYLES ENGINEERING CORP.

MAXIMUM ALLOWABLE SLOPES

	SHORT TERM	LONG TERM
TYPE A SOILS	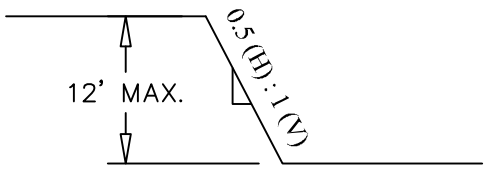	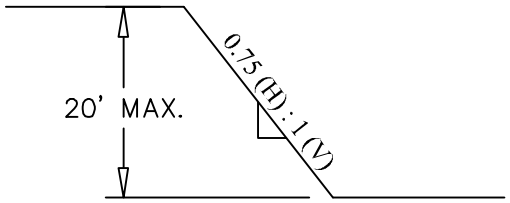
TYPE B SOILS	N/A	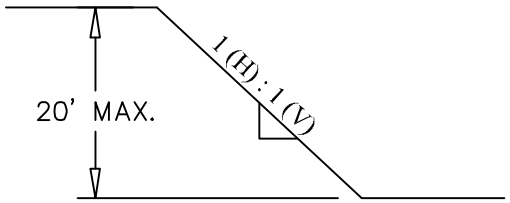
TYPE C SOILS	N/A	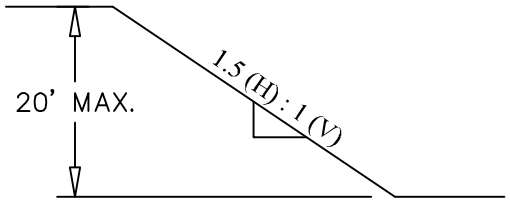

NOTES:

(1) For Type A soils, a short term maximum allowable slope of 0.5 (H) : 1 (V) is allowed in excavations that are 12 feet or less in depth; short term (24 hours or less) maximum allowable slopes for excavations greater than 12 feet in depth shall be 0.75 (H) : 1 (V).

(2) Maximum depth for above slopes is 20 feet. For slopes deeper than 20 feet, trench protection should be designed by the Contractor's professional engineer.

Reference: OSHA, Safety and Health Regulations for Construction, 1926 Subpart P.

AYLES ENGINEERING CORP.

A COMBINATION OF BRACING AND OPEN CUTS

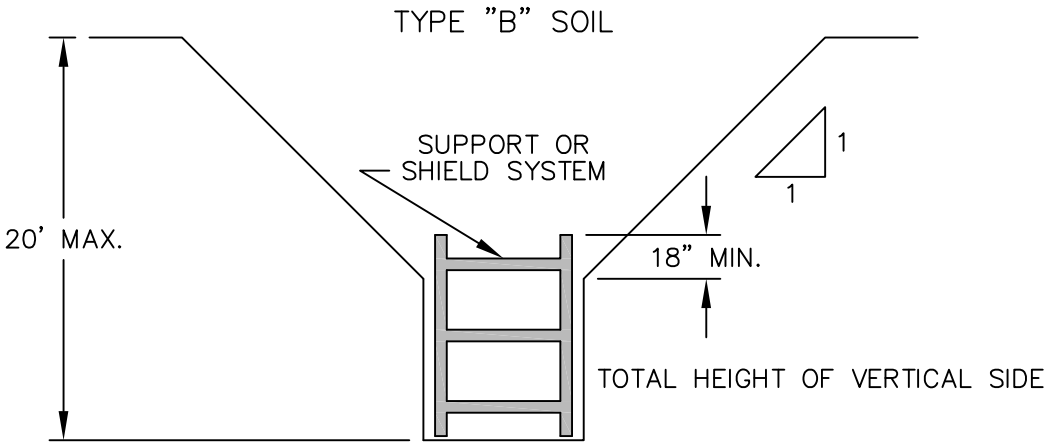

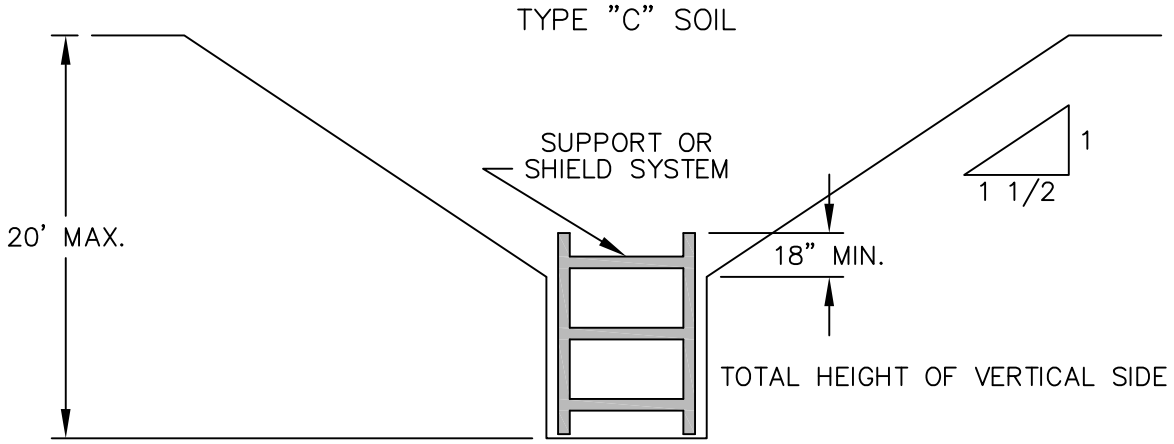

Reference: OSHA, Safety and Health Regulations for Construction, 1926 Subpart P.

AYLES ENGINEERING CORP.

LATERAL PRESSURE DIAGRAMS
FOR OPEN CUTS IN COHESIVE SOIL - LONG TERM CONDITIONS

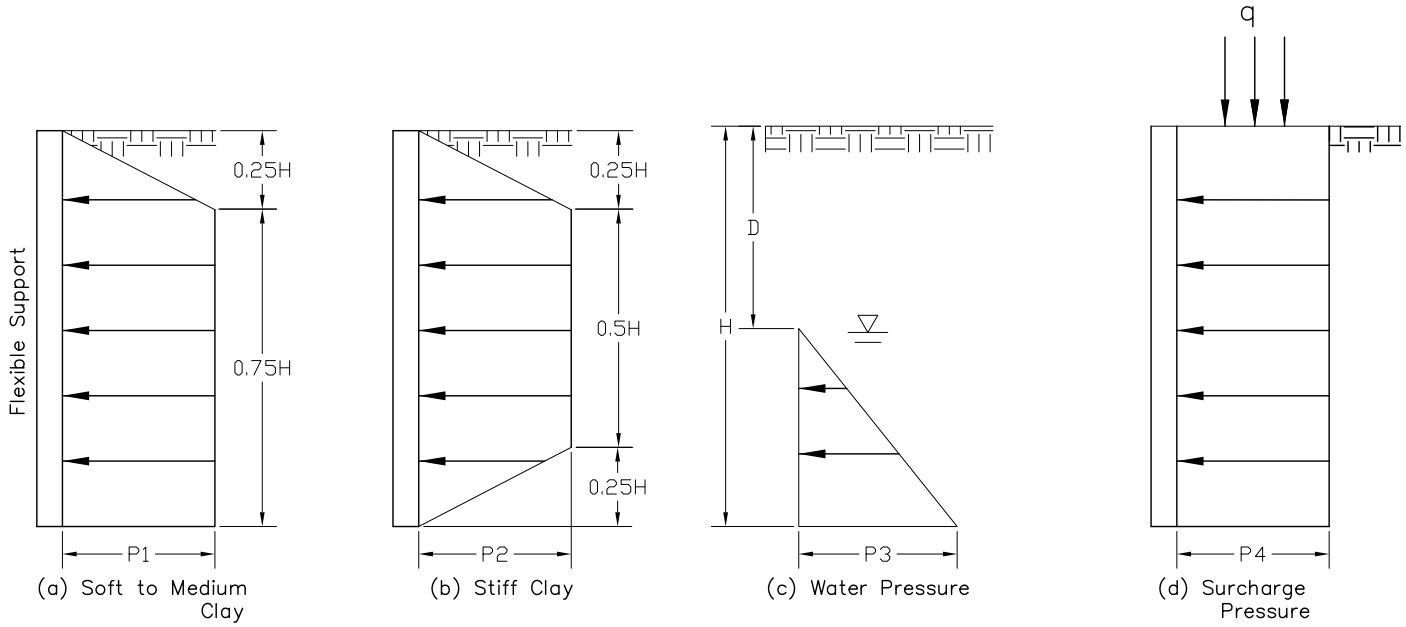

Empirical Pressure Distributions

Where:
H = Total excavation depth, feet
D = Depth to water table, feet
P1 = Lateral earth pressure = γH-4C, psf
P2 = Lateral earth pressure = 0.4γH, psf
P3 = Water pressure = γ_w (H-D), psf
P4 = Lateral earth pressure caused by surcharge = qK_a, psf
γ = Effective unit weight of soil, pcf
γ_w = Unit weight of water, pcf
C = Drained shear strength or cohesion, psf
K_a = Coefficient of active earth pressure

Notes:
1. All pressures are additive.
2. No safety factors are included.
3. For use only during long term construction.
4. If γH/C < 4, use section (b),
   If 4 < γH/C < 6, use larger of section (a) or (b),
   If γH/C > 6, use section (a).

Reference: Peck, R.B. (1969), "Deep Excavation and Tunneling in soft Ground", 7th ICSMFE, State of art volume, pp. 225-290.

AYLES ENGINEERING CORP.

LATERAL PRESSURE DIAGRAMS
FOR OPEN CUTS IN COHESIVE SOIL - SHORT TERM CONDITIONS

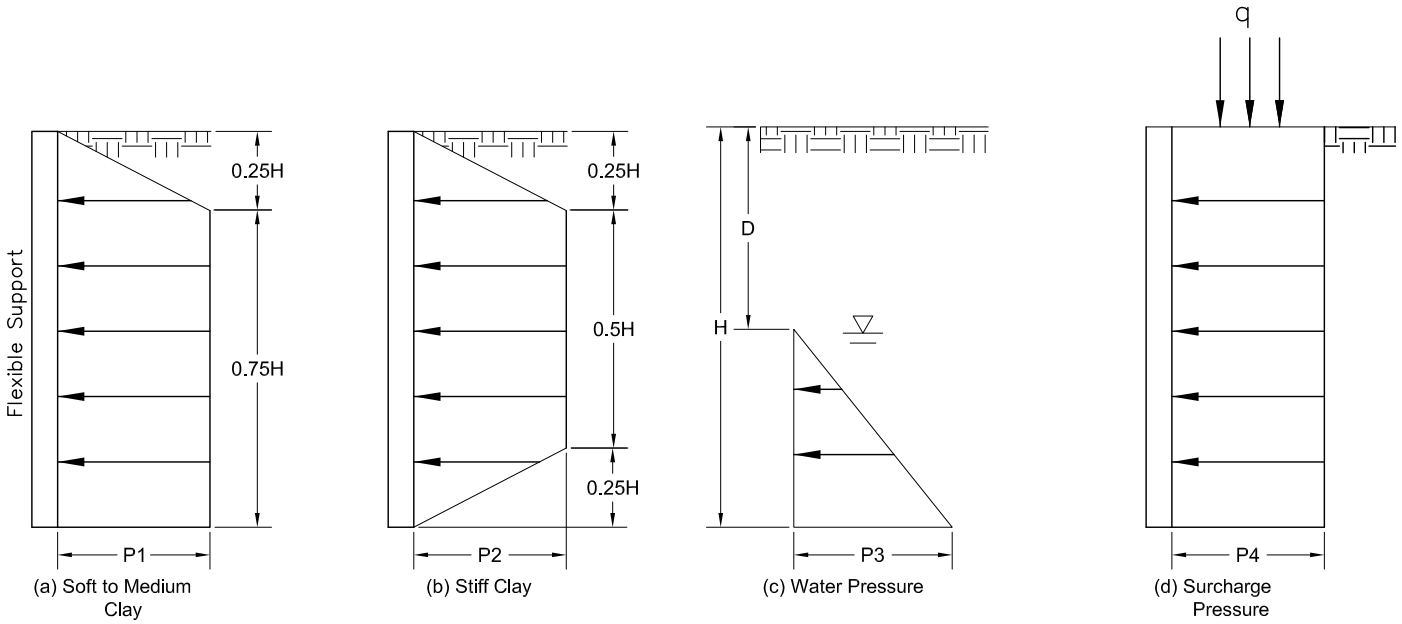

Empirical Pressure Distributions

Where:
H = Total excavation depth, feet
D = Depth to water table, feet
P1 = Lateral earth pressure = $\gamma H - 4S_u$, psf
P2 = Lateral earth pressure = $0.2\gamma H$, psf
P3 = Water pressure = γ_w (H-D), psf
P4 = Lateral earth pressure caused by surcharge = qK_a, psf
γ = Effective unit weight of soil, pcf
γ_w = Unit weight of water, pcf
S_u = Undrained shear strength = $q_u/2$, psf
q_u = Unconfined compressive strength, psf
K_a = Coefficient of active earth pressure

Notes:
1. All pressures are additive.
2. No safety factors are included.
3. For use only during short term construction.
4. If $\gamma H/S_u < 4$, use section (b),
   If $4 < \gamma H/S_u < 6$, use larger of section (a) or (b),
   If $\gamma H/S_u > 6$, use section (a).

Reference: Peck, R.B. (1969), "Deep Excavation and Tunneling in soft Ground", 7th ICSMFE, State of art volume, pp. 225-290.

ENGINEERING CORP.

LATERAL PRESSURE DIAGRAMS
FOR OPEN CUTS IN SAND

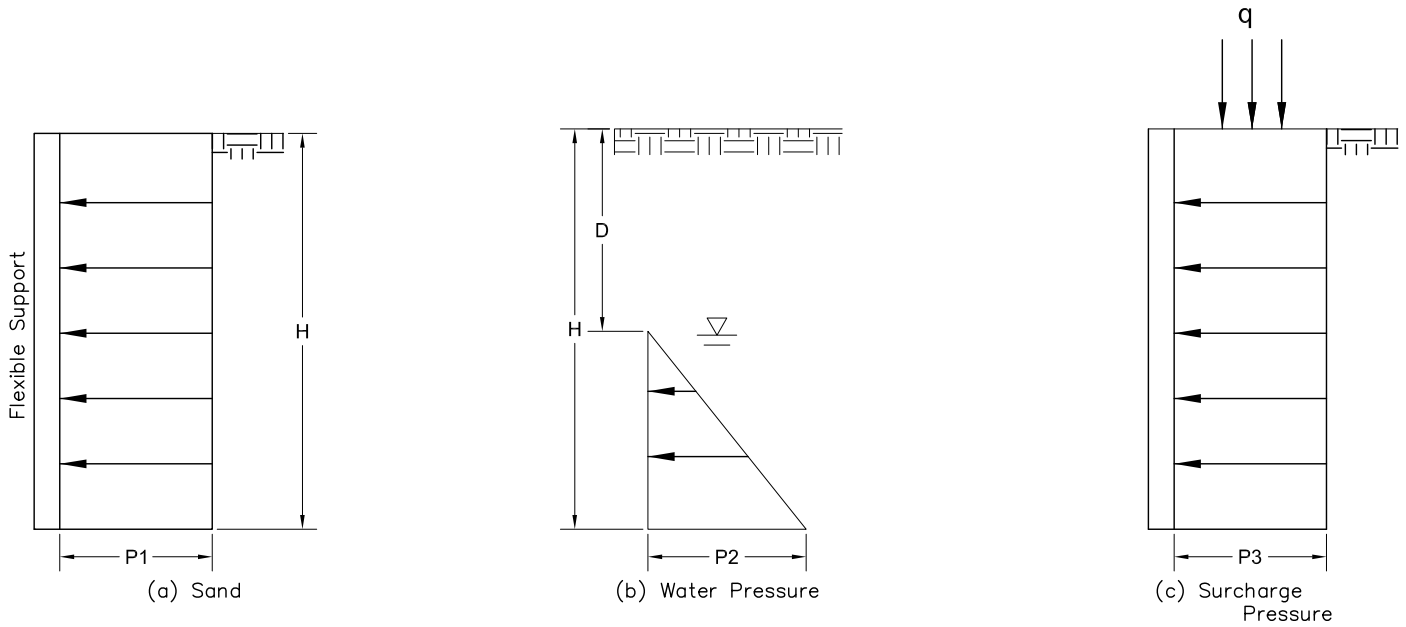

Empirical Pressure Distributions

Where:
H = Total excavation depth, feet
D = Depth to water table, feet
P1 = Lateral earth pressure = $0.65*\gamma HK_a$, psf
P2 = Water pressure = γ_w (H-D), psf
P3 = Lateral earth pressure caused by surcharge = qK_a, psf
γ = Effective unit weight of soil, pcf
γ_w = Unit weight of water, pcf
K_a = Coefficient of active earth pressure = $(1-\sin\varphi)/(1+\sin\varphi)$
φ = Drained friction angle

Notes:
1. All pressures are additive.
2. No safety factors are included.

Reference: Peck, R.B. (1969), "Deep Excavation and Tunneling in soft Ground", 7th ICSMFE, State of art volume, pp. 225-290.

BOTTOM STABILITY FOR BRACED EXCAVATION IN CLAY

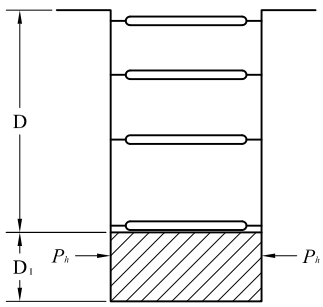

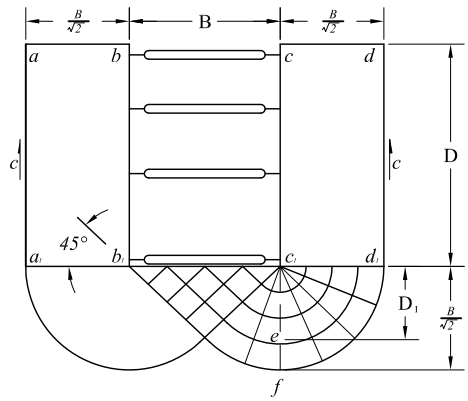

Factor of Safety against bottom of heave,

$$F.S = \frac{NcC}{(\gamma D+q)}$$

where, Nc = Coefficient depending on the dimension of the excavation (see Figure at the bottom)
C = Undrained shear strength of soil in zone immediately around the bottom of the excavation,
γ = Unit weight of soil,
D = Depth of excavation,
q = Surface surcharge.

If F.S < 1.5, sheeting should be extended further down to achieve stability

$$\textit{Depth of Buried Length, } (D_1) = \frac{1.5(\gamma D+q)-NcC}{(C/B)-0.5\gamma} \; ; D_1 \geq 5\ ft.$$

Pressure on buried length, P_h:

For $D_1 < 0.47B$; $P_h = 1.5\ D_1(\gamma D - 1.4\ CD/B - 3.14C)$

For $D_1 > 0.47B$; $P_h = 0.7\ (\gamma DB - 1.4\ CD - 3.14CB)$

where; B = width of excavation

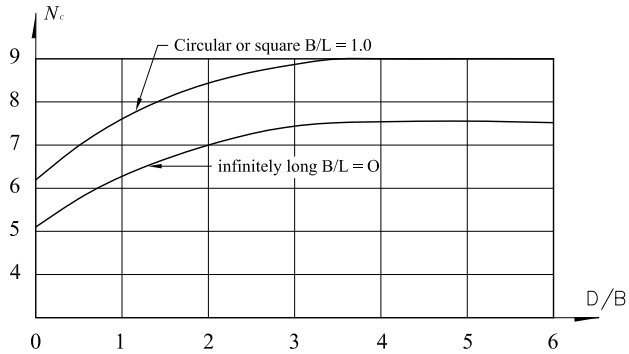

N_c rectangular = $(0.84 + 0.16B/L)N_c$ square

Reference: Bjerrum, L. and Eide, O., Stability of Strutted Excavations in Clay, Geotechnique, 6, 32-47 (1956).

AYLES ENGINEERING CORP.

BUOYANT UPLIFT RESISTANCE FOR BURIED STRUCTURES

(a) WALL / SOIL FRICTION PLUS STRUCTURAL WEIGHT

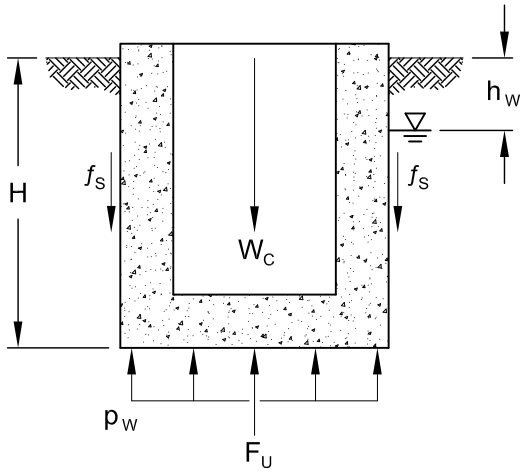

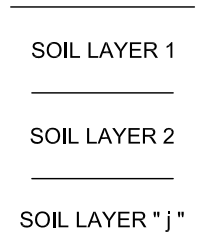

(b) SOIL WEIGHT ABOVE BASE EXTENSION

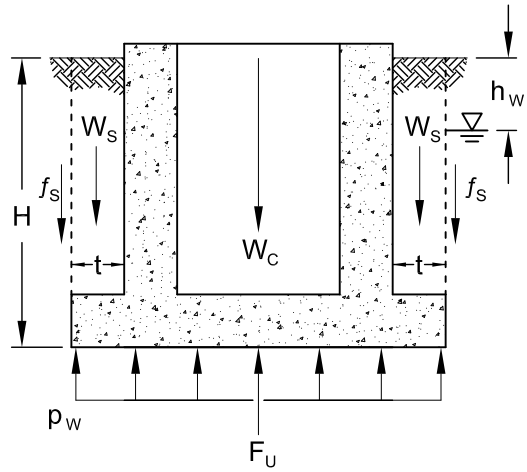

cohesive soils: $f_{S_j} = \alpha\ c_j \leqq 3{,}000$ psf

cohesionless soils: $f_{S_j} = 0.75\ K_S\ \sigma_{V_j} \tan\delta_j$

$$Q_S = P_S \sum f_{S_j}\ h_j$$

$$\frac{W_C}{S_{f_a}} + \frac{Q_S}{S_{f_b}} \geqq F_U$$

cohesive soils: $f_{S_j} = c_j \leqq 3{,}000$ psf

cohesionless soils: $f_{S_j} = 0.75\ K_S\ \sigma_{V_j} \tan\Phi_j$

$$Q_S = P_S \sum f_{S_j}\ h_j$$

$$\frac{W_C}{S_{f_a}} + \frac{Q_S}{S_{f_b}} + \frac{W_S}{S_{f_c}} \geqq F_U$$

Where:

- A_B = area of base, sq. ft.
- H = buried height of structure, ft.
- h_W = depth to water table, ft.
- p_W = $\gamma_W (H - h_W)$, unit hydrostatic uplift, psf.
- γ_W = 62.4 pcf, unit weight of water
- F_U = $p_W A_B$, hydrostatic uplift force, lbs.
- f_{S_j} = unit frictional resistance of soil layer " j ", psf.
- c_j = undrained cohesion of soil layer " j ", psf.
- α = 0.55, cohesion factor between soil and structure wall
- σ_{V_j} = effective overburden pressure at midpoint of soil layer " j ", psf.
- δ_j = 0.75 Φ_j, friction angle between soil layer " j " and concrete wall, degrees
- Φ_j = internal angle of friction of soil layer " j ", degrees
- K_S = 0.4, coefficient of lateral pressure
- h_j = thickness of soil layer " j ", ft.
- j = 1, 2, ...
- P_S = perimeter of structure base, ft.
- Q_S = ultimate skin friction, lbs.
- W_C = weight of structure, lbs.
- W_S = weight of backfill above base extension, lbs.
- S_{f_a} = 1.1, factor of safety for dead weight of structure
- S_{f_b} = 3.0, factor of safety for soil / structure friction
- S_{f_c} = 1.5, factor of safety for soil weight above base extension
- t = width of base extension, ft.

NOTE: neglect f_S in upper 5 feet for expansive clay with a plasticity index > 20.

Reference:

1) *American Concrete Pipe Association, (1996), Manhole Floatation*
2) *O'Neill, M.W., and Reese, L.C., (1999), "Drilled Shafts: Construction Procedures and Design Methods", FHWA–IF–99–025*

AVILES ENGINEERING CORP.

APPENDIX E

Piezometer Installation and Plugging Reports

STATE OF TEXAS WELL REPORT for Tracking #382962

Owner:	**City of Houston Geotechnical Dept**	Owner Well #:	**pz-1**
Address:	**611 Walker Floor 14 Houston , TX 77002**	Grid #:	**65-21-6**
Well Location:	**2400 Holcombe Blvd Houston , TX 77021**	Latitude:	**29° 42' 18" N**
Well County:	**Harris**	Longitude:	**095° 23' 23" W**
Elevation:	**No Data**	GPS Brand Used:	**No Data**
Type of Work:	**New Well**	Proposed Use:	**Monitor**

Drilling Date: Started: **10/6/2014**
Completed: **10/6/2014**

Diameter of Hole: Diameter: **4 in From Surface To 40 ft**

Drilling Method: **Mud Rotary**

Borehole Completion: **No Data**

Annular Seal Data: 1st Interval: **From 0 ft to 11 ft with 1 cement (#sacks and material)**
2nd Interval: **From 11 ft to 13 ft with .5 bentonite (#sacks and material)**
3rd Interval: **No Data**
Method Used: **No Data**
Cemented By: **No Data**
Distance to Septic Field or other Concentrated Contamination: **No Data**
Distance to Property Line: **No Data**
Method of Verification: **No Data**
Approved by Variance: **No Data**

Surface Completion: **Surface Slab Installed**

Water Level: Static level: **na ft. below land surface on (No Data)**
Artesian flow: **No Data**

Packers: **20/40 13-40**

Plugging Info: Casing left in well: Cement/Bentonite left in well:
From (ft) To (ft) From (ft) To (ft) Cem/Bent Sacks Used
0-25' of 2" pvc was grouted in place via tremmie method on 12/05/2014 using 6 gallons of cement grout.

Type Of Pump: **No Data**

Well Tests: **No Data**

Water Quality: Type of Water: **No Data**
Depth of Strata: **No Data**
Chemical Analysis Made: **No**
Did the driller knowingly penetrate any strata which contained undesirable constituents: **No Data**

Certification Data: The driller certified that the driller drilled this well (or the well was drilled

	under the driller's direct supervision) and that each and all of the statements herein are true and correct. The driller understood that failure to complete the required items will result in the log(s) being returned for completion and resubmittal.
Company Information:	**Van and Sons Drilling Service** **319 John Alber** **Houston , TX 77076**
Driller License Number:	**2903**
Licensed Well Driller Signature:	**Eddie Van Antwerp**
Registered Driller Apprentice Signature:	**Christopher Olvera**
Apprentice Registration Number:	**No Data**
Comments:	**Chris Olvera set the well on 10/06/2014** **Elliot VanAntwerp plugged the well 12/05/2014**

IMPORTANT NOTICE FOR PERSONS HAVING WELLS DRILLED CONCERNING CONFIDENTIALITY

TEX. OCC. CODE Title 12, Chapter 1901.251, authorizes the owner (owner or the person for whom the well was drilled) to keep information in Well Reports confidential. The Department shall hold the contents of the well log confidential and not a matter of public record if it receives, by certified mail, a written request to do so from the owner.

Please include the report's Tracking number (Tracking #**382962**) on your written request.

Texas Department of Licensing & Regulation
P.O. Box 12157
Austin, TX 78711
(512) 463-7880

DESC. & COLOR OF FORMATION MATERIAL

From (ft)	To (ft)	Description
na		

CASING, BLANK PIPE & WELL SCREEN DATA

Dia.	New/Used	Type	Setting From/To
2	**n**	**sch 40 pvc**	**riser 0-15**
2	**n**	**sch 40 pvc**	**screen 15-25 .010**