GEOTECHNICAL INVESTIGATION
CITY OF HOUSTON PHASE II – DESIGN FOR RENEWAL/REPLACEMENT OF FIR RIDGE LIFT STATION
WBS NO. R-000267-0117-3
HOUSTON, TEXAS

REPORT NO. 1140205501

Prepared for:

IDS ENGINEERING GROUP

Houston, Texas

Submitted by:

GEOTEST ENGINEERING, INC.

Houston, Texas

Key Map No. 338 L

GEOTEST ENGINEERING, INC.

Geotechnical Engineers & Materials Testing

5600 Bintliff Drive Houston, Texas 77036 Telephone: (713) 266-0588
Fax: (713) 266-2977

Report No. 1140205501
March 4, 2015

Mr. Chad Nesvadba, P.E.
IDS Engineering Group
13333 Northwest Freeway, Suite 300
Houston, Texas 77040

Reference: Geotechnical Investigation
City Of Houston Phase II – Design for
Renewal/Replacement of Fir Ridge Lift Station
WBS No. R-000267-0117-3
Houston, Texas

Dear Mr. Nesvadba:

Presented herein is the final geotechnical investigation report for the referenced project. A draft report was submitted to you on December 31, 2014. This final report supersedes all previously submitted reports, transmittals, etc. for the referenced project. This study was authorized by IDS Engineering Group through Agreement with Independent Consultant dated September 14, 2014 by accepting our proposal number 1140322699 dated May 30, 2014.

We appreciate this opportunity to be of service to you. Please call us when we can be of further assistance.

Sincerely,
GEOTEST ENGINEERING, INC.
TBPE Registration No. F-410

K. Naresh

Naresh Kolli, P.E.
Assistant Project Manager

B.C. L

Mohan Ballagere, P.E.
Vice President

STATE OF TEXAS
3/4/15
NARESH KOLLI
110928
LICENSED
PROFESSIONAL ENGINEER

STATE OF TEXAS
3/4/15
MOHAN BALLAGERE
87622
LICENSED
PROFESSIONAL ENGINEER

MB\ego
PC38\Geotechnical\40205501F.DOC
Copies Submitted: (2+1 pdf)

TABLE OF CONTENTS

		Page
SUMMARY		1
1.0	INTRODUCTION	
1.1	General	3
1.2	Authorization	3
1.3	Location and Description of the Project	3
1.4	Purpose and Scope	3
2.0	FIELD INVESTIGATION	
2.1	General	5
2.2	Geotechnical Borings	5
2.3	Piezometer Installation	6
3.0	LABORATORY TESTING	7
4.0	SUBSURFACE CONDITIONS	
4.1	Site Geology	8
4.2	General Fault Information	8
4.3	Existing Pavement	8
4.4	Soils Stratigraphy	9
4.5	Groundwater	10
5.0	GEOTECHNICAL RECOMMENDATIONS	
5.1	General	11
5.2	Open-Cut Excavation	11
	5.2.1 Geotechnical Parameters	11
	5.2.2 Excavation Stability	11
	5.2.3 Ground Water Control	13
	5.2.4 Pipe Bedding and Backfill	13
	5.2.5 Auger Pit Backfill	13
5.3	Trenchless Installation	13
	5.3.1 Geotechnical Parameters	13

TABLE OF CONTENTS

		Page
	5.3.2 Earth Pressure on Auger Casing	14
	5.3.3 Carrier Pipe Design Parameters	14
	5.3.4 Influence of Trenchless Operation on Adjacent Structures	14
5.4	Structures	
	5.4.1 Description	15
	5.4.2 Foundation Conditions	15
	5.4.3 Foundation Design Recommendations	16
	5.4.4 Protection of Below Grade Structures	17
	5.4.5 Groundwater Control During Construction	17
	5.4.6 Structure Backfill	17
6.0	CONSTRUCTION CONSIDERATIONS	18
7.0	PROVISIONS	19

ILLUSTRATIONS

	Figure
Vicinity Map	1
Plan of Borings	2.1 thru 2.3
Boring Log Profile	3
Symbols and Abbreviations Used on Boring Log Profiles	4
Excavation Support Earth Pressure	5.1 and 5.2
Stability of Bottom for Braced Cut	6
Earth Pressure on Pipe and Casing Augering	7
Lateral Earth Pressure Diagram for Permanent Wall	8.1 and 8.2
Uplift Pressure and Resistance	9

TABLE OF CONTENTS
(Continued)

TABLES

	Table
Summary of Boring Information	1
Geotechnical Design Parameter Summary: Open-cut Excavation	2
Geotechnical Design Parameter Summary: Trenchless Installation	3

APPENDIX A

	Figure
Log of Borings	A-1 thru A-3
Symbols and Terms Used on Boring Logs	A-4
Piezometer Installation Report	A-5

APPENDIX B

	Figure
Summary of Laboratory Test Results	B-1 thru B-3
Grain Size Distribution Curves	B-4

APPENDIX C

TDLR Piezometer Installation and Abandonment Reports

APPENDIX D

Letter from IDS Engineering Group

SUMMARY

A geotechnical investigation was conducted in connection with the design and construction of proposed 8 to 15 inch sanitary sewer as part of The City of Houston Phase II – Design for Renewal/Replacement of Fir Ridge Lift Station in Houston, Texas.

The project includes design and construction of approximately 1,300 linear feet (LF) of new 8 to 15-inch relief sewer from MH along Fir Ridge and Sunny Glenn Drive easement to tie into lift station. The depth of the relief sewer ranges from 12 to 20 feet. The sanitary sewer will be installed by open cut method of construction except at some location where it will be installed by trenchless method of construction.

The scope of this study included, drilling and sampling three (3) borings to a depth of 27 feet, performing laboratory tests on samples recovered from the borings, performing engineering analyses to develop geotechnical recommendations and preparing a geotechnical report.

The principal findings and conclusions developed from this investigation are summarized as follows:

- The subsurface soils below the existing pavement, as revealed by borings FRLS-1 through FRLS-3, consist of medium stiff to hard dark gray, brown, gray and yellowish brown and gray Fat Clay and Lean Clay to a depth of 27 feet, the termination depth of the borings. Medium dense brown and gray Silty Sand was encountered between the depths of 23.5 to 25 feet and 14 to 16 feet in borings FRLS-2 and FRLS-3, respectively. Fill material consisting of stiff to very stiff brown and gray fat clay with sand and shell fragments was encountered to a depth of 10 feet in boring FRLS-3.

- Groundwater was first encountered during drilling at depths ranging from14 to 18 feet in all the borings. The water level measured 15 minutes after water was first encountered was at depths ranging from 8.3 to 15.8 feet in these borings. The groundwater was measured at 14.0 feet in piezometer FRLS-1P on October 22, 2014.

- The borings were drilling in the existing pavement. The existing pavement consists of 4 to 4.25 inches of asphalt over 8.5 to 9 inches of oyster shell in borings FRLS-1 and FRLS-2. The existing pavement at boring FRLS-3 consists of 9.5 inches of limestone and sand mix.

- Based on the available information, no documented surface faults existing within the project alignment.

- All excavation operations should be carried out in accordance with OSHA standards and the City of Houston Standard Specifications.

- In general, excavation and backfill for sanitary sewer line should be designed and constructed in accordance with City of Houston Standard Specification No. 02317.

- The foundation recommendations for the proposed manholes are presented in Section 5.4 of this report.

1.0 INTRODUCTION

1.1 General

A geotechnical investigation was conducted in connection with the design and construction of proposed 8 to 15-inch relief sewer as part of the City of Houston Phase II – Design for Renewal/Replacement of Fir Ridge Lift Station in Houston, Texas.

1.2 Authorization

This study was authorized by IDS Engineering Group through Agreement with Independent Consultant dated September 14, 2014 by accepting our proposal number 1140322699 dated May 30, 2014.

1.3 Location and Description of the Project

The project is located along Fir Ridge Lane and Sunny Glenn Drive in Houston, Texas within Key Map Page and Grid 338 L.

The project includes design and construction of approximately 1,300 linear feet (LF) of new 8 to 15-inch relief sewer from MH along Fir Ridge and Sunny Glenn Drive easement to tie into lift station. The depth of the relief sewer ranges from 12 to 20 feet. The sanitary sewer will be installed by open cut method of construction except at some location where it will be installed by trenchless method of construction. A vicinity Map is presented on Figure 1.

1.4 Purpose and Scope

The purposes of this investigation were to explore the subsurface conditions for the proposed sanitary sewer line and to develop geotechnical recommendations pertinent to the design and

construction of the sanitary sewer line. The scope of this investigation consisted of the following tasks.

- Drilled and sampled three (3) borings each to a depth of 27 feet along the proposed sanitary sewer.

- Performed laboratory tests on selected representative soil samples to determine the engineering properties of the soils and to select design soil parameters.

- Performed a fault reconnaissance to evaluate the potential for known active faults that may impact this project.

- Performed engineering analyses in accordance with the City of Houston Infrastructure Design Manual (July 2012) to develop geotechnical recommendations for the design and construction of the proposed sanitary sewer line.

- Prepared a geotechnical report.

2.0 FIELD INVESTIGATION

2.1 General

After obtaining the utilities clearance, the borings were drilled to the explored depth utilizing a truck mounted drilling rig. All the drilling and sampling were performed in accordance with appropriate ASTM procedures.

2.2 Geotechnical Borings

Subsurface conditions were explored by three (3) borings (designated as FRLS-1 through FRLS-3) drilled each to a depth of 27 feet. The boring locations are shown on Plan of Borings, presented on Figures 2.1 through 2.3. The survey information (northing, easting and ground surface elevation) of the borings were interpolated from the drawings provided to us by IDS Engineering Group. A summary of boring information is provided on Table 1. It should be noted that borings were drilled to 27 feet (September 2014) based on invert depth of relief sewer ranging from 12 to 17 feet as provided to us during the original scope of the project. However, based on the drawings provided to us by IDS Engineering, Inc., dated December 2014, it was noted that the invert depth of relief sewer has been increased from 17 to 20 feet at boring location FRLS-2, and hence the boring depth did not meet the City of Houston Design Manual Requirements (Chapter 11, Section 11.14f). Further, based on the letter provided by IDS Engineering Group, dated February 17, 2015, IDS has sufficient data to complete their design and no additional data is warranted at this time. The letter provided by IDS Engineering Group is presented in Appendix D.

Samples were taken continuously to a depth of 20 feet and at 5-foot intervals in remaining depths to the terminal depth of borings. In general, samples of cohesive soils were obtained with a 3-inch thin-walled tube sampler in accordance with ASTM Method D 1587 and samples of granular soils were obtained with a 2-inch diameter split-barrel sampler in general accordance with ASTM Method D 1586. Each sample was removed from the sampler in the field, carefully examined and

then logged by an experienced soils technician. Suitable portions of each sample were sealed and packaged for transportation to Geotest's Laboratory. The shear strength of cohesive soil samples was estimated using a pocket penetrometer in the field. Driving resistances for the split-barrel sampler were recorded as "Blows per Foot" on the boring logs. All the borings, except the borings that are converted to piezometer, were grouted with cement-bentonite grout after completion of drilling and obtaining water level measurements.

A detailed description of the soils encountered in the borings are given on the boring logs FRLS-1 through FRLS-3 presented on Figures A-1 through A-3 in Appendix A. A key to "Symbols and Terms used on Boring Log" is given on Figure A-4 in Appendix A.

2.3 Piezometer Installation

During the field investigation, a piezometer was installed in the open borehole of boring FRLS-1. The location of the piezometer, designated as FRLS-1P, is shown on Figure 2.1 (Plan of Borings). The piezometer installation report showing the details of the construction of the piezometer is provided on Figure A-5 in Appendix A.

The piezometer installation report was submitted to Texas Department of Licensing and Regulations (TDLR). The piezometer was abandoned in place after taking the final water level measurements. The TDLR piezometer installation and abandonment reports are presented in Appendix C.

3.0 LABORATORY TESTING

The laboratory testing program was designed to evaluate the pertinent physical properties and shear strength characteristics of the subsurface soils. Classification tests were performed on selected samples to aid in soil classification.

Undrained shear strengths of selected cohesive samples were measured by unconsolidated undrained (UU) triaxial compression tests (ASTM D2850). The results of the UU triaxial compression tests are plotted on the boring log as squares. The shear strength of cohesive samples was measured in the field with a calibrated hand pocket penetrometer and also in the laboratory with a Torvane. The shear strength values obtained from the penetrometer and Torvane are plotted on the boring logs as open circles and triangles, respectively.

Measurements of moisture content and dry unit weight were taken for each UU triaxial compression test sample. Moisture content (ASTM D2216) measurements were also made on other samples to define the moisture profile at each boring location. The liquid and plastic limit tests (ASTM D 4318) and percent passing No. 200 sieves (ASTM D1140) and sieve analyses (ASTM D422) were performed on appropriate samples.

The result of all tests are tabulated or summarized on the boring logs FRLS-1 through FRLS-3 presented on Figures A-1 through A-3 in Appendix A. The summary of laboratory tests is also presented in a tabular form on Figures B-1 through B-3 in Appendix B. The grain size distribution curves are presented on Figure B-4 in Appendix B.

4.0 SUBSURFACE CONDITIONS

4.1 Site Geology

Based on the Houston Sheet, Texas, Geologic Atlas of Texas (Bureau of Economic Geology, University of Texas, 1982), the project alignment is in the Beaumont Formation. The clays and sands of the Beaumont Formation are over-consolidated as a result of desiccation from frequent rising and lowering of the sea level and the groundwater table. Consequently, clays of this formation have moderate to high shear strength and relatively low compressibility. The sands of the Beaumont Formation are typically very fine and often silty. There is evidence in the Houston area of the occurrence of cemented material (sandstone and siltstone) deposits within this formation.

4.2 General Fault Information

A review of information in the Geotest library, relating to known surface and subsurface geologic faults in the general area of the project alignment, was undertaken. The information consists of U.S. Geological Survey maps, open file reports and information contained in our files relating to geologic faults in the project area.

Based on the available information, no documented surface faults exist within the project alignment. Hence, a Phase I Geological Fault Study will not be needed for this project.

4.3 Existing Pavement

The borings were drilled in the existing pavement. The existing pavement consist of 4 to 4.25 inches of asphalt over 8.5 to 9 inches of oyster shell in borings FRLS-1 and FRLS-2. The existing pavement at boring FRLS-3 consists of 9.5 inches of limestone and sand mix.

4.4 Soils Stratigraphy

Based on the subsurface soils encountered in borings drilled for this study, one (1) boring log profile was developed and is presented on Figure 3. The symbols and abbreviations used on boring log profile is given on Figure 4. To the left of each boring shown on the profile is an indication of the consistency or density of each stratum. More than one consistency for an individual stratum indicates that the consistency varies within the stratum. For cohesive soils, consistency is related to the undrained shear strength of the soil and for cohesionless soils, the relative density of soil is measured by standard penetration test blows of the soil. To the right of each boring shown on the profile is the overall classification of the soil contained within each stratum. The classification is based on the ASTM D2487.

The subsurface soils below the existing pavement, as revealed by borings FRLS-1 through FRLS-3 and as shown on boring log profile presented on Figure 3, consist of medium stiff to hard dark gray, brown, gray, yellowish brown and gray Fat Clay and Lean Clay to a depth of 27 feet, the termination depth of the borings. Medium dense brown and gray Silty Sand was encountered between the depths of 23.5 to 25 feet and 14 to 16 feet in borings FRLS-2 and FRLS-3, respectively. Fill material consisting of stiff to very stiff brown and gray fat clay with sand and shell fragments was encountered to a depth of 10 feet in boring FRLS-3.

The Fat Clay and Fat Clay with sand is of high plasticity with liquid limits ranging from 50 to 98 and plasticity indices ranging from 29 to 64. The lean clay is of medium plasticity with liquid limits ranging from 32 to 37 and plasticity indices ranging from 11 to 17. The fines content (percent No. 200 sieve) of Fat Clay and Lean Clay ranges from 87 to 100 percent. The fines content of Fat Clay with sand is about 84 percent. The fines content of Silty Sand ranges from 18 to 49 percent.

4.5 Groundwater

Groundwater was first encountered during drilling at depths ranging from14 to 18 feet in all the borings. The water level measured 15 minutes after water was first encountered was at depths ranging from 8.3 to 15.8 feet in these borings. The groundwater was measured at 14.0 feet in piezometer FRLS-1P on October 22, 2014.

It should be noted that various environmental and man-made factors such as amount of precipitation, could substantially influence groundwater level.

5.0 GEOTECHNICAL RECOMMENDATIONS

5.1 General

The project includes design and construction of approximately 1,300 linear feet (LF) of new 8 to 15-inch relief sewer from MH along Fir Ridge and Sunny Glenn Drive easement to tie into lift station. The depth of the relief sewer ranges from 12 to 20 feet. The sanitary sewer will installed by open cut method of construction except at some location where it will be installed by trenchless method of construction.

5.2 Open-Cut Excavation

5.2.1 Geotechnical Parameters. Based on the soil conditions revealed by the borings, geotechnical parameters were developed for the open cut excavation for the installation of sanitary sewer line or access shafts for pipe and auger method of construction. The geotechnical design parameters are provided in Table 2. For design, the groundwater level should be assumed to exist at the ground surface, since this condition may exist after a heavy rain or flooding.

5.2.2 Excavation Stability. The open excavation for access shaft may be shored, laid back to a stable slope or some other equivalent means used to provide safety for workers and adjacent structures. The excavating and trenching operations should be in accordance with OSHA Standards, OSHA 2207, Subpart P, latest revision and the City of Houston requirements.

- Excavation Shallower Than 5 Feet – Excavations that are less than 5 feet (critical height) deep should be appropriately protected when any indication of hazardous ground movement is anticipated.

- Excavation Deeper Than 5 Feet - Excavations that are deeper than 5 feet should be sloped, shored, sheeted, braced or laid back to a stable slope or supported by some other equivalent means or protection such that workers are not exposed to moving ground or

cave-ins. The slopes and shoring should be in accordance with the trench safety requirements per OSHA Standards. The following items provide design criteria for trench stability.

(i) OSHA's Soil Type. Based on the soil conditions revealed by the borings and the assumed groundwater level at surface, OSHA's soil type "C" should be used for the determination of allowable maximum slope and/or the design of a shoring system. For shoring deeper than 20 feet, an engineering evaluation is required.

(ii) Excavation Support Earth Pressure. Based on the subsurface conditions indicated by this investigation and laboratory testing results, the excavation support earth pressure diagrams were developed and are presented on Figures 5.1 and 5.2. These pressure diagrams can be used for the design of temporary excavation bracing. For a trench box, a lateral earth pressure resulting from an equivalent fluid with a unit weight of 94 pcf is recommended. The above value of equivalent fluid pressure is based upon an assumption that the groundwater level is near the ground surface, since these conditions may exist after a heavy rain or flooding. Effect of surcharge loads at the ground surface should be added to the computed lateral earth pressure. A surcharge load, q, will typically result in a lateral load equal to 0.5 q.

(iii) Bottom Stability. In braced cuts, if tight sheeting is terminated at the base of the cut, the bottom of the excavation can become unstable under certain conditions. This condition is governed by the shear strength of the soils and by the differential hydrostatic head between the groundwater level within the retained soils and the groundwater level at the interior of the trench excavation. For cuts in cohesive soils, as predominantly encountered for the excavation depths of 12 to 20 feet, the stability of the bottom can be evaluated in accordance with the procedure outlined on Figure 6. However, due to the presence of silty sand layer between the depths of 14 and 16

feet in boring FRLS-3, dewatering will be required during the excavation to avoid bottom stability problems.

5.2.3 Ground Water Control. Excavations will encounter groundwater seepage. It is our opinion that in cohesive soils, as predominantly encountered, the groundwater may be collected in excavation bottom sumps for pumped disposal. However, due to the presence of silty sand layer between the depths of 14 and 16 feet in boring FRLS-3, dewatering will be required during the installation of sanitary sewer line. In this area the groundwater may be controlled by using eductor well system if can be successfully lowered 5 feet below the excavation bottom or alternatively installing sheet pile cutoff wall to insure excavation bottom stability.

The contractor should verify the groundwater level at the time of construction and should provide an adequate dewatering system, where required. Dewatering should be carried out in accordance with the City of Houston Standard Specifications, Section 01578, "Control of Ground Water and Surface Water."

5.2.4 Pipe Bedding and Backfill. In general, excavation and backfill for sanitary sewer line should be designed and constructed in accordance with City of Houston Standard Specification No. 02317, " Excavation and Backfill for Utilities" and drawing Nos. 02317-01.

5.2.5 Auger Pit Backfill. The excavated auger pits should be backfilled per the City of Houston Standard Specification Section 02448, Subsection 3.01.

5.3 Trenchless Installation

The proposed sanitary sewer in some areas will be installed by trenchless method of construction.

5.3.1 Geotechnical Parameters. Based on the soil conditions revealed by soil borings and laboratory test data, geotechnical design parameters were developed for cohesive soils and are provided

in Table 3. The cohesive soils include fat clays and lean clays, and the cohesionless soils include silty sand. For design conditions, the groundwater levels should be assumed to exist at the ground surface, since these conditions may exist after heavy rain or flooding.

5.3.2 Earth Pressure on Auger Casing. The earth pressures on the auger casing should be determined from Figure 7. Equations to calculate the tunnel liner loads are also shown in Figure 7. For crossing under the major roads, the stress due to traffic loads should be considered.

5.3.3 Carrier Pipe Design Parameters. Carrier pipe must be sufficiently strong to withstand anticipated long-term ground loads and must not be subject to deterioration by substance either in the ground or in the auger casing. The carrier pipe design should include consideration of not only the loads applied to the pipe but also factors other than soil loading. These factors could include minimum structural code requirements, loading from pipe jacking operations and other construction loads. The drained geotechnical design parameters given in Table 3 should be used in analyzing the soil structure interaction of the carrier pipe.

5.3.4 Influence of Trenchless Operation on Adjacent Structures. Surface and near-surface structures near the pipe and casing augering primarily consist of residential buildings, city streets and public utilities.

Ground movement, in terms of loss of ground or ground lost, is commonly associated with soft ground augering. If such ground movement is excessive, it may cause damage to the structures, roads and services located above the auger casing. While ground movement cannot be eliminated, it can be controlled within certain limits by the use of proper construction techniques and good quality workmanship. These include, but are not limited to, prevention of excessive ground loss during trenchless operation with the use of grouting and filling the annular space between the pipe or casing and the surrounding soil and prevention of undue loss of fines through dewatering.

The selection and execution of trenchless methods that are best suited to anticipated ground conditions along the proposed auger casing are, in fact, the contractor's primary contribution to successful completion of the proposed auger casing. Review of the boring log revealed that the ground conditions for augering (excavation face) will be primarily through Fat Clays and Lean Clay and Fat Clay fill. Fill material consisting of fat clay with sand was encountered in boring to a depth of 10 feet in boring FRLS-3. The cohesive soils within this fill matrix as well as natural soils are stiff to very in consistency and the ground in this area may be expected to behave as squeezing to raveling ground near the invert.

The proposed auger casing is parallel with or crosses beneath a number of water, gas, power, telephone and storm and sanitary sewer lines. The largest potential problems from utilities may result from:

- Leaking water pipes
- Gas pipe breakage leading to a potential explosion
- Breakage of storm or sanitary sewers

In general, it is the contractor's responsibility to investigate these and other possible third party interactions along the proposed water line alignment and to accommodate all of these interactions with the use of good construction methods.

5.4 Structures

5.4.1 Description. The structures associated with this project will be the manholes.

5.4.2 Foundation Conditions. Foundation conditions were explored by borings FRLS-1 through FRLS-3. Based on the soil conditions revealed by the boring, the bases of the manholes placed at depths ranging from 12 to 20 feet will be in the medium stiff to hard fat clay and lean clay.

5.4.3 Foundation Design Recommendations. The following items provide recommendations and design criteria for construction of the manholes.

- Allowable Bearing Pressures. The bases of structures placed at approximate depths ranging from 12 feet to about 20 feet at the various locations may be proportioned for an allowable (net) bearing pressure as given below.

Manhole No.	**Nearest Boring No.**	**Approximate Foundation Depths, feet**	**Allowable (Net) Bearing Pressure, psf**
A-2, A-3, A-4 (Fir Ridge) and A-5 (Sunny Glen)	FRLS-1	12 to 14	3,200
A-6 (Sunny Glen)	FRLS-2	20	1,500
A-7, A-8 and A-9 (Sunny Glen)	FRLS-3	17 to 18	5,000

The allowable bearing pressures include a safety factor of 2.0. The above recommendations assume that the final bearing surfaces consist of undisturbed natural soils and that underlying semi-transmissive zones are properly pressure-relieved and stable undisturbed bearing surfaces are attained.

(iv) Bottom Stability. Bottom stability is described earlier in Section 5.2.2 under Excavation Stability.

- Lateral Earth Pressure. The pressure diagrams presented on Figures 5.1 and 5.2 can be used for the design of braced excavation. The lateral earth pressure diagrams presented on Figures 8.1 and 8.2 are applicable for the design of the permanent walls.

- Hydrostatic Uplift Resistance. Structures extending below the groundwater level should be designed to resist uplift pressure resulting from excess piezometric head.

Design uplift pressures should be computed based on the assumption that the water table is at ground surface. To resist the hydrostatic uplift at the bottom of the structure, one of the following sources of resistance can be utilized in each of the designs.

a. Dead weight of structure,
b. Weight of soil above base extensions plus weight of structure, or
c. Soil-wall friction plus dead weight of structure.

The uplift force and resistance to uplift should be computed as detailed on Figure 9. In determining the configuration and dimensions of the structure using one of the approaches presented on Figure 9, the following factors of safety are recommended.

a. Dead weight of concrete structure, $S_{f1} = 1.10$,
b. Weight of soil (backfill) above base extension, $S_{f2} = 1.5$, and
c. Soil-wall friction, $S_{f3} = 3.0$.

Friction resistance should be discounted for the upper 5 feet, since this zone is affected by seasonal moisture changes.

5.4.4 Protection of Below Grade Structures. The design of the proper means for protection of below grade structures will depend upon the potential of the aggressivity or corrosivity of soil and groundwater properties. The design of the protection of below grade structures is beyond the scope of services for this study.

5.4.5 Groundwater Control During Construction. The ground water control should be followed in accordance with the Section 5.2.3 of this report.

5.4.6 Structure Backfill. Excavations for the proposed structures should be backfilled in accordance with the City of Houston Standard Specifications, Section 02316, "Excavation and Backfill for Structures."

6.0 CONSTRUCTION CONSIDERATIONS

Excavations will encounter groundwater seepage. It is our opinion that in cohesive soils, as predominantly encountered, the groundwater may be collected in excavation bottom sumps for pumped disposal. However, due to the presence of silty sand layer between the depths of 14 and 16 feet in boring FRLS-3, dewatering will be required during the installation of sanitary sewer line. In this area the groundwater may be controlled by using eductor well system if can be successfully lowered 5 feet below the excavation bottom or alternatively installing sheet pile cutoff wall to insure excavation bottom stability.

The contractor should verify the groundwater level at the time of construction and should provide an adequate dewatering system, where required. Dewatering should be carried out in accordance with the City of Houston Standard Specifications, Section 01578, "Control of Ground Water and Surface Water."

7.0 PROVISIONS

The description of subsurface conditions and the design information contained in this report are based on the test borings made at the time of drilling at specific locations. Some variation in soil conditions may however, occur between test borings. Should any subsurface conditions other than those described in our boring logs be encountered, Geotest should be immediately notified so that further investigation and supplemental recommendations can be provided.

The depth of the groundwater level may vary with changes in environmental conditions such as frequency and magnitude of rainfall. The stratification lines on the log of borings represent the approximate boundaries between soil types. Transitions between soil types may be more gradual than depicted.

This report has been prepared for the exclusive use of IDS Engineering Group and the City of Houston for the design and construction of Renewal/Replacement of Fir Ridge Lift Station in Houston, Texas.

This report shall not be reproduced without the written permission of Geotest Engineering, Inc., IDS Engineering Group, or the City of Houston.

ILLUSTRATIONS

	Figure
Vicinity Map	1
Plan of Borings	2.1 thru 2.3
Boring Log Profile	3
Symbols and Abbreviations Used on Boring Log Profiles	4
Excavation Support Earth Pressure	5.1 and 5.2
Stability of Bottom for Braced Cut	6
Earth Pressure on Pipe and Casing Augering	7
Lateral Earth Pressure Diagram for Permanent Wall	8.1 and 8.2
Uplift Pressure and Resistance	9

Job No. 1140205501

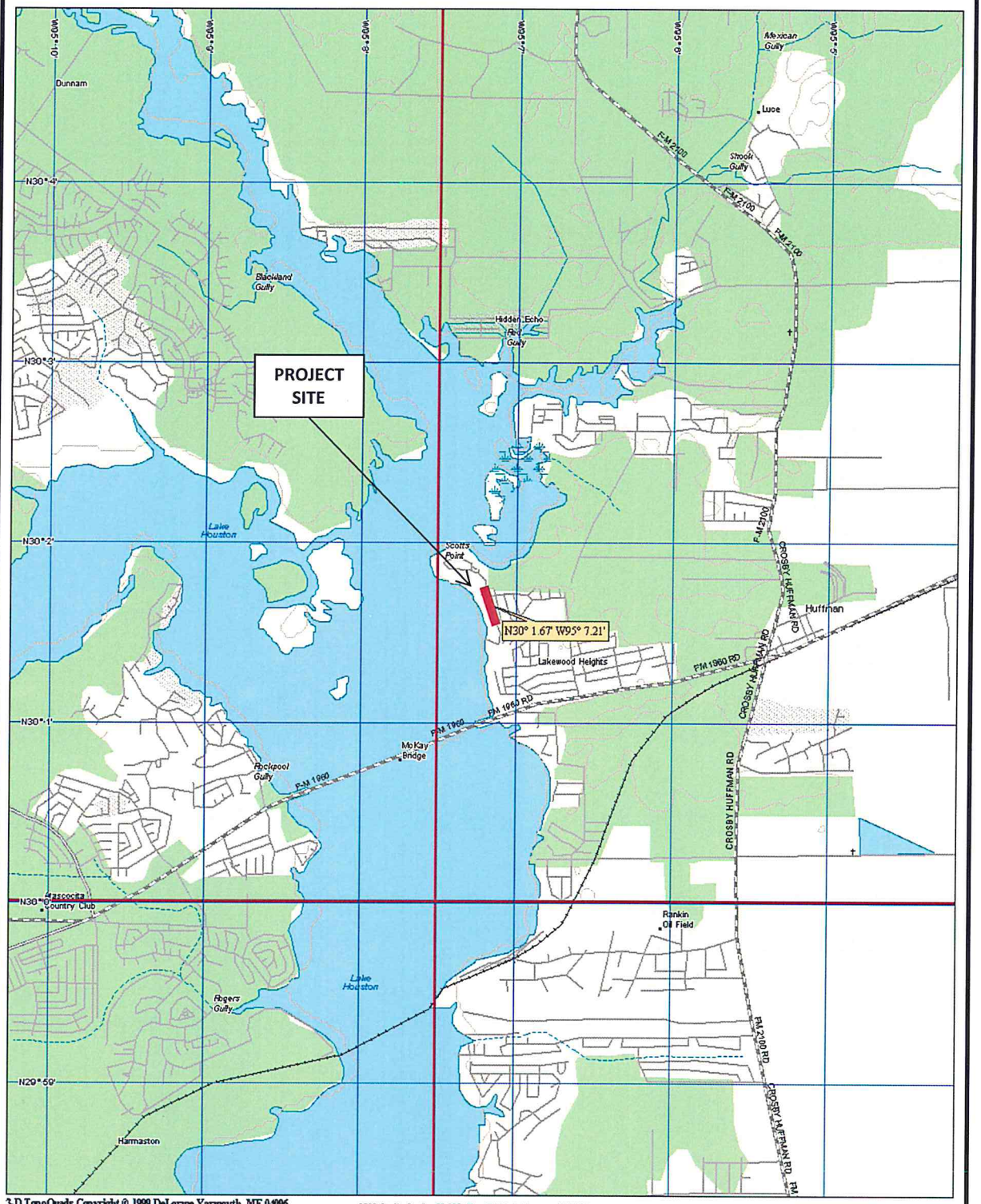

City of Houston Phase II – Design for
Renewal/Replacement of Fir Ridge Lift Station
WBS No. R-000267-0117-3
Houston, Texas

VICINITY MAP

Geotest Engineering, Inc.

FIGURE 1

Job No. 1140205501

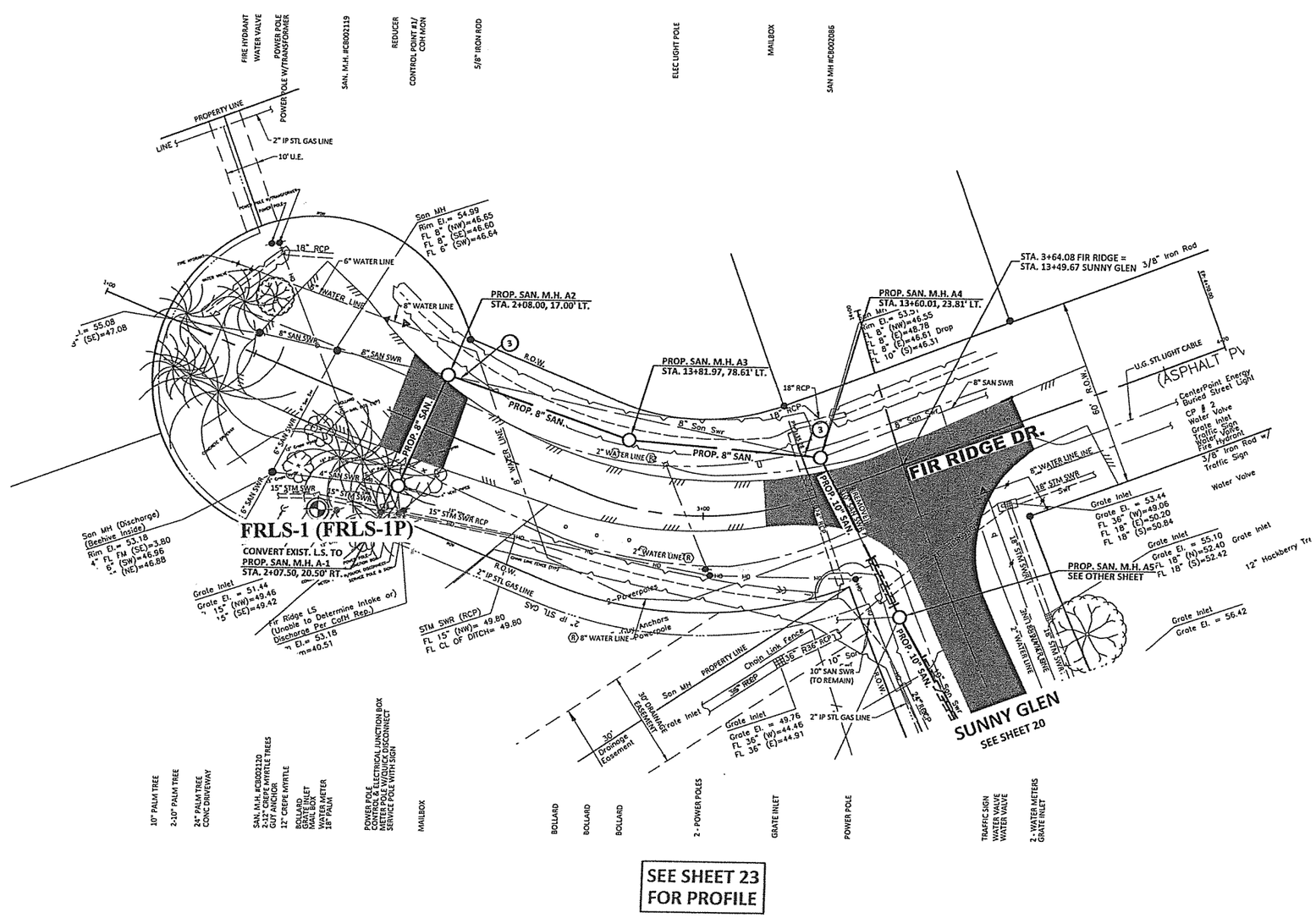

SEE SHEET 23
FOR PROFILE

Legend	Geotest Engineering, Inc.
Boring	City of Houston Phase II – Design for Renewal/Replacement of Fir Ridge Lift Station WBS No. R-000267-0117-3 Harris County, Texas
Boring with Piezometer	**PLAN OF BORINGS** 0 20 40 SCALE IN FEET

FIGURE 2.1

Job No. 1140205501

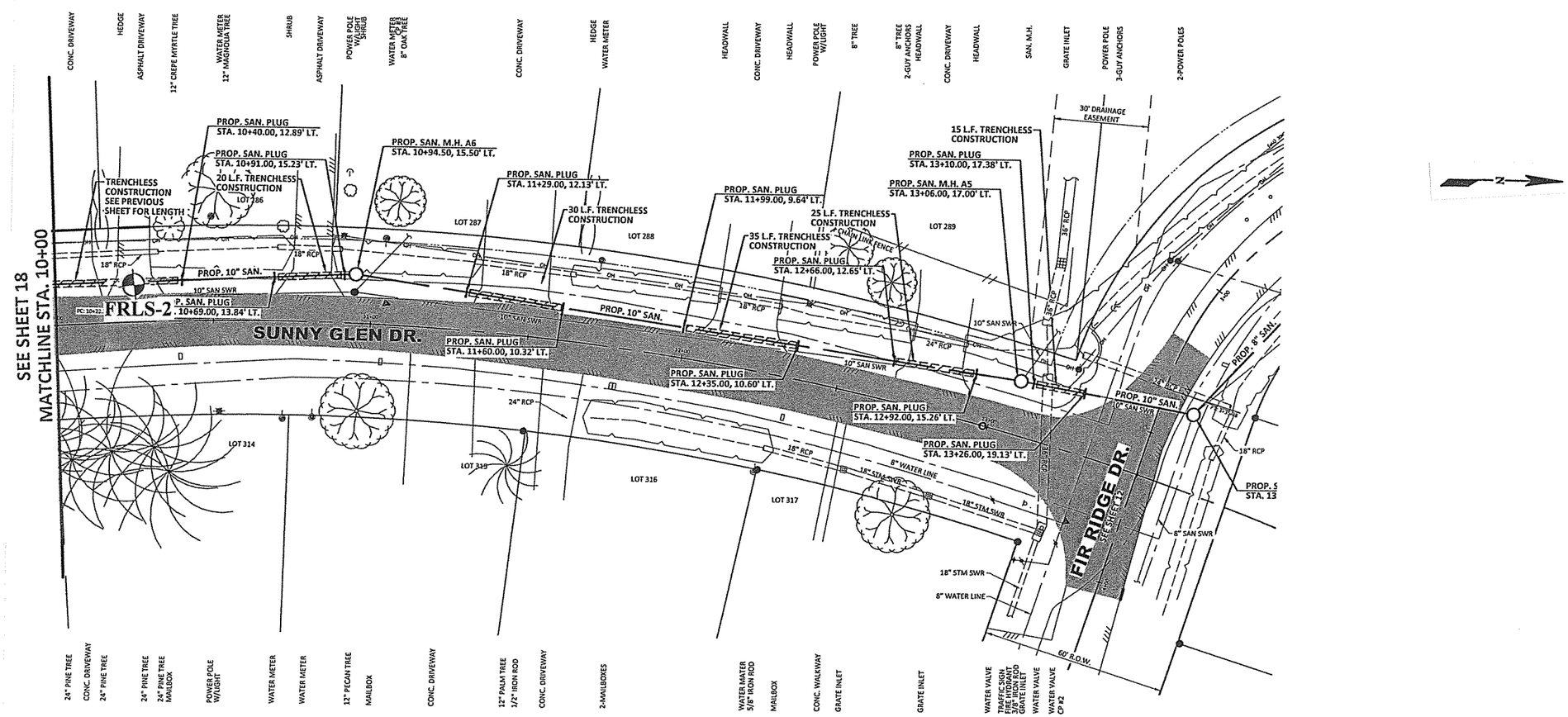

Legend	Geotest Engineering, Inc.
Boring Boring with Piezometer	City of Houston Phase II – Design for Renewal/Replacement of Fir Ridge Lift Station WBS No. R-000267-0117-3 Harris County, Texas **PLAN OF BORINGS** 0 20 40 SCALE IN FEET

Geotest Engineering, Inc.

FIGURE 2.2

Job No. 1140205501

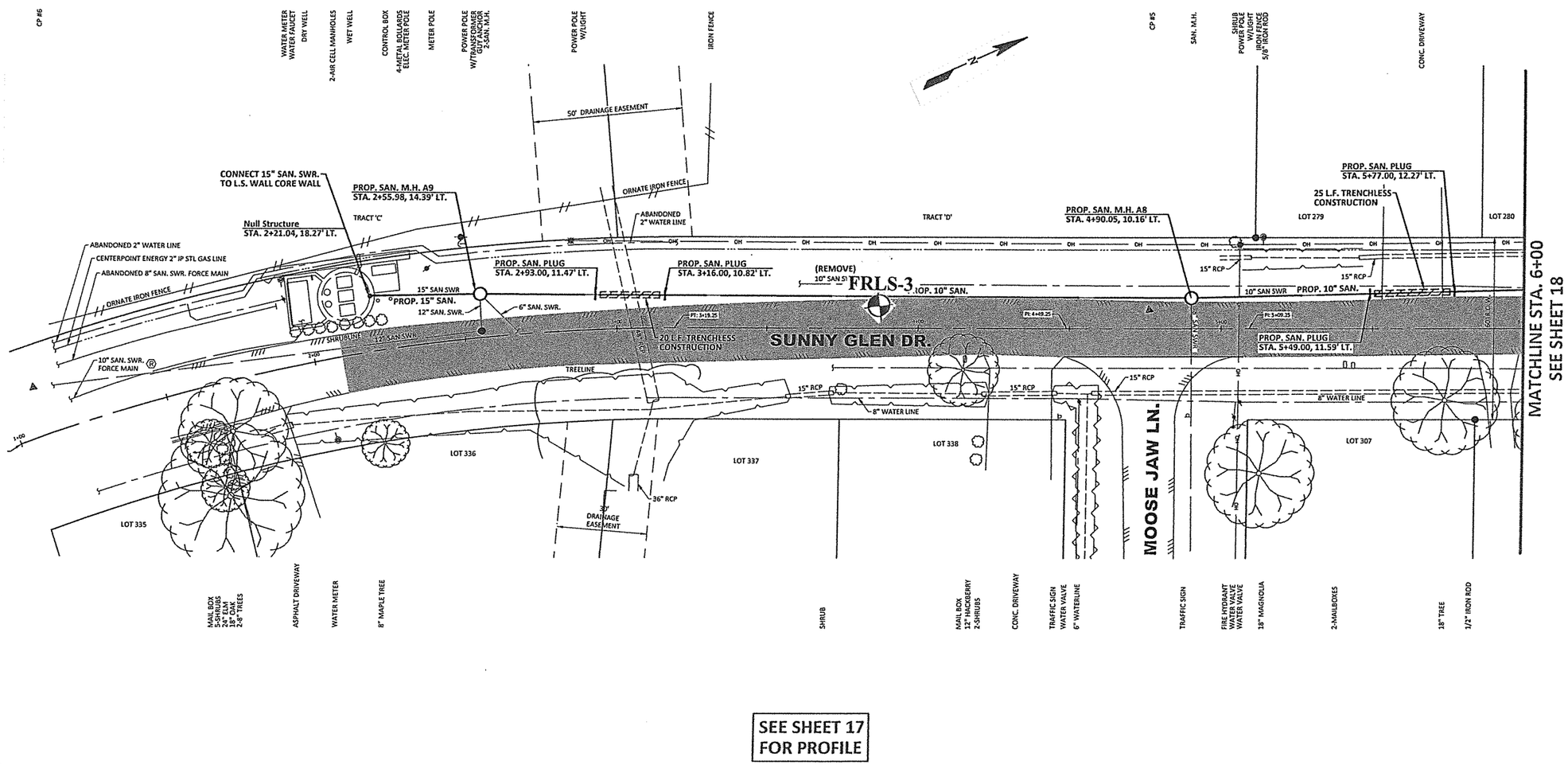

SEE SHEET 17
FOR PROFILE

Legend	Geotest Engineering, Inc.
Boring Boring with Piezometer	City of Houston Phase II – Design for Renewal/Replacement of Fir Ridge Lift Station WBS No. R-000267-0117-3 Harris County, Texas **PLAN OF BORINGS** 0 20 40 SCALE IN FEET

FIGURE 2.3

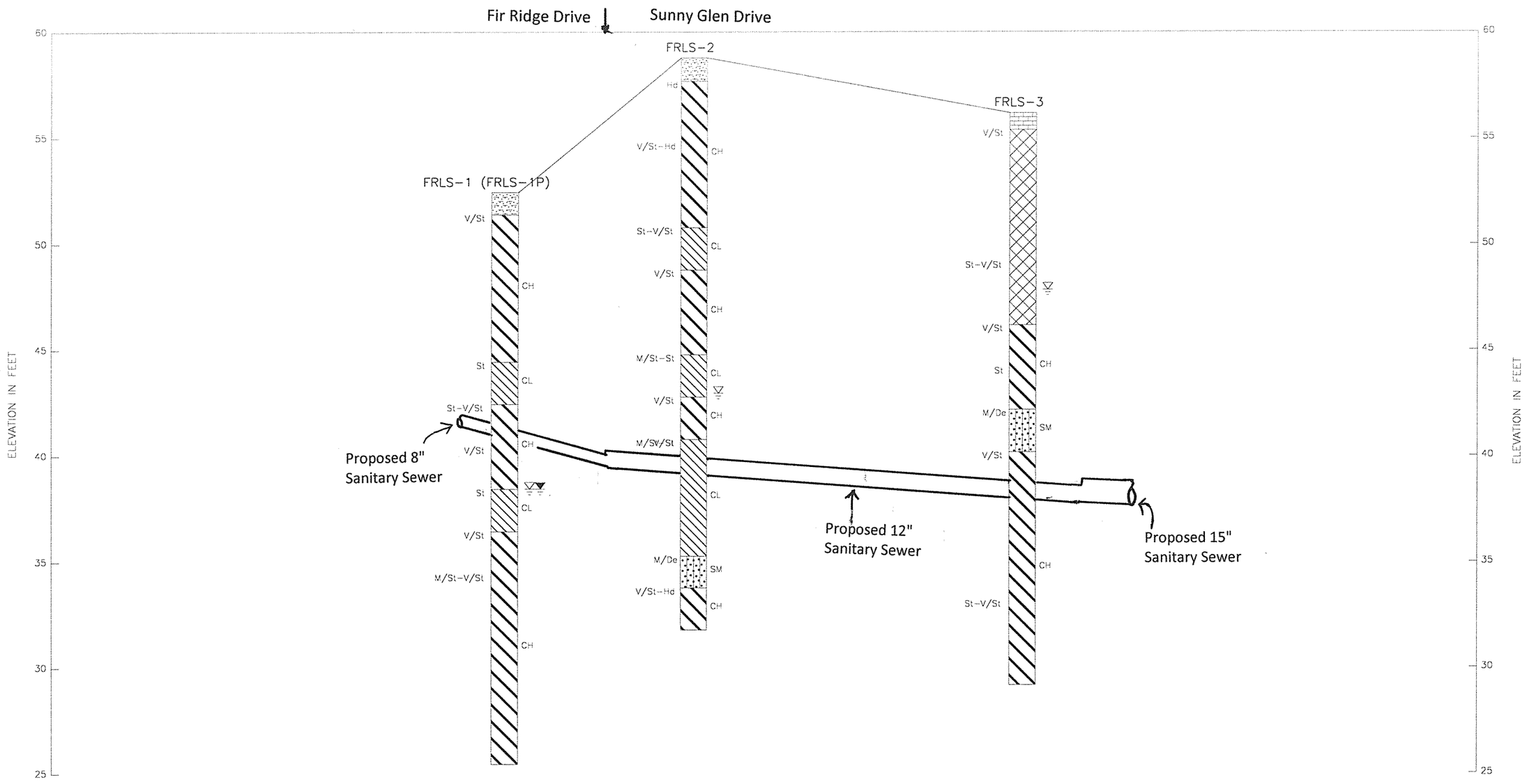

GENERAL NOTES:

1. See Figures 2.1 thru 2.3 for approximate location of borings and profile section.
2. Data concerning subsurface conditions have been obtained at boring locations only. Actual conditions between borings may differ from the profile shown here.
3. See logs of boring for detailed description of soils encountered in each borehole.
4. See Figure 4 for symbols and abbreviations used on this profile.
5. Ground surface elevation at each boring location was based on survey data provided to us by IDS Engineering Group

BORING LOG PROFILE

FRI RIDGE AND SUNNY GLEN DRIVE

0 100 200 300 400

HORIZONTAL SCALE IN FEET

Job No. 1140205501

SYMBOLS AND ABBREVIATIONS USED ON BORING LOG PROFILE

LEGEND

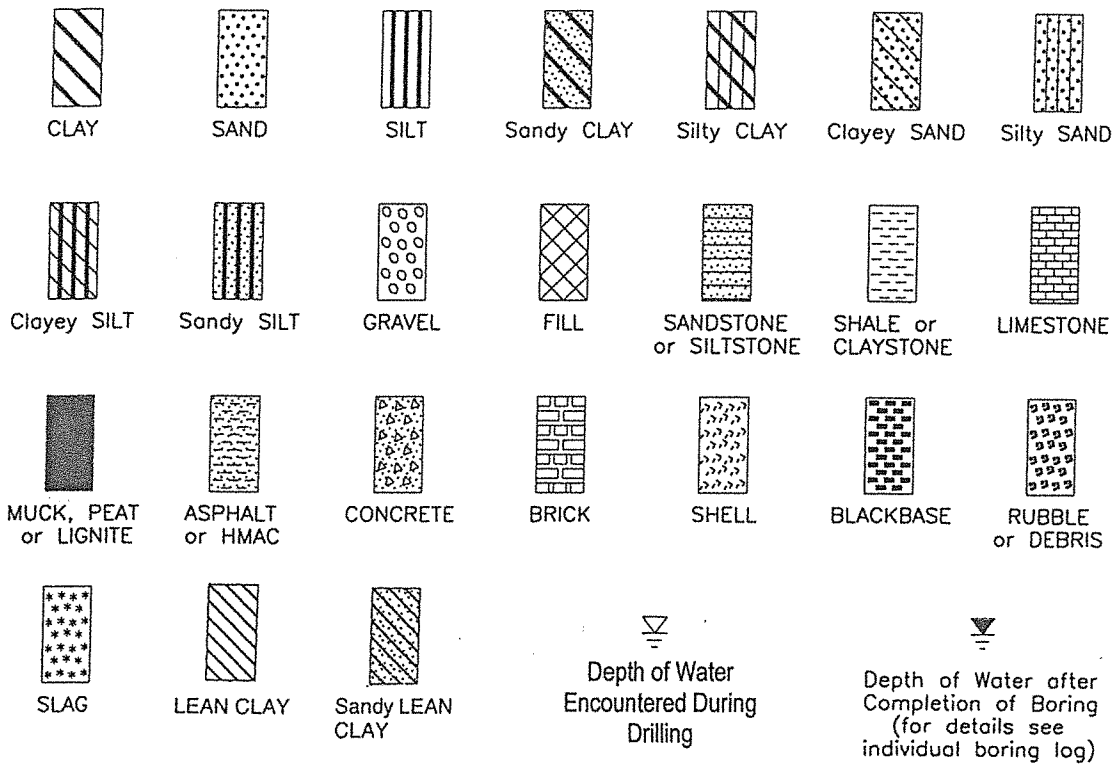

ABBREVIATIONS USED FOR CONSISTENCY/DENSITY

COHESIVE SOILS

V/So : Very Soft
So : Soft
Fm : Firm
M/St : Medium Stiff
St : Stiff
V/St : Very Stiff
Hd : Hard
V/Hd : Very Hard

COHESIONLESS SOILS

V/Lo : Very Loose
Lo : Loose
S/Co : Slightly Compact
Co : Compact
M/De : Medium Dense
De : Dense
V/De : Very Dense

Job No. 1140205501

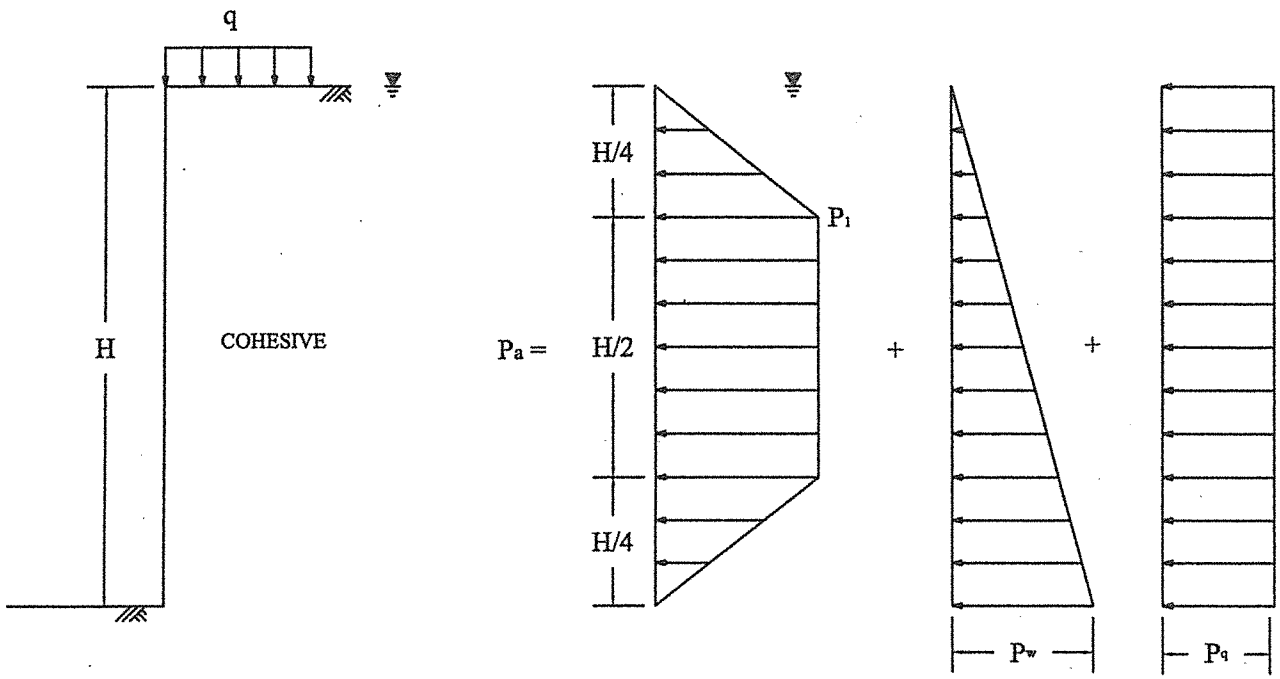

TYPICAL SOIL PARAMETERS

BRACED WALL

See Table 2 for typical values of soil parameters

For $\gamma H/c \leq 4$

$P_1 = 0.3\ \gamma_c' H$
$P_w = \gamma_w H = 62.4\ H$
$P_q = 0.5\ q$

Where:

γ_c' = Submerged unit weight of cohesive soil, pcf;
γ_w = Unit weight of water, pcf;
q = Surcharge load at surface, psf;
P_a = Lateral pressure, psf;
P_1 = Active earth pressure, psf;
P_q = Horizontal pressure due to surcharge, psf;
P_w = Hydrostatic pressure due to groundwater, psf;
H = Depth of braced excavation, feet
c = Shear strength of cohesion soil, psf;

TRENCH SUPPORT EARTH PRESSURE

SUBMERGED COHESIVE SOIL

Job No. 1140205501

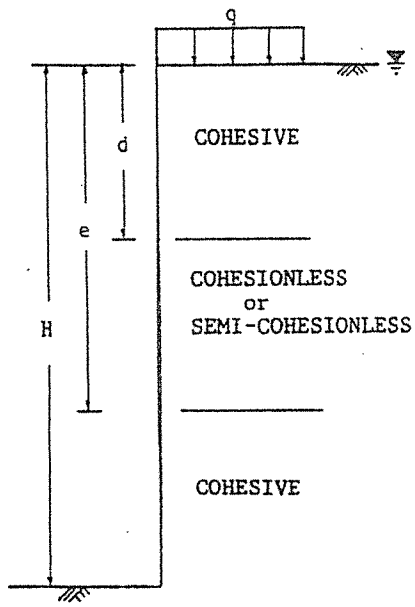

TYPICAL SOIL PARAMETERS

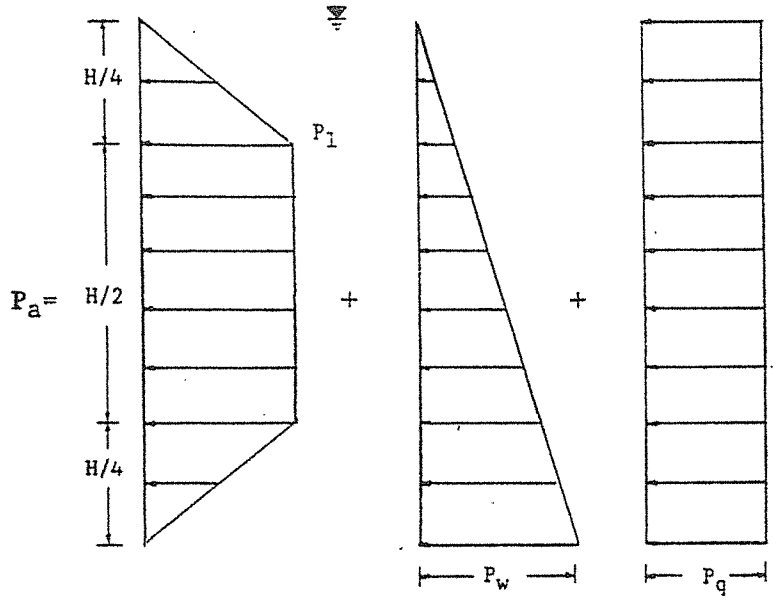

BRACED WALL

See Table 2 for typical values of soil parameters

$P_1 = 0.3\ \gamma'_{avg}\ H$

$P_w = \gamma_w\ H = 62.4\ H$

$P_q = 0.5q$

$$\gamma'_{avg} = \frac{\gamma_c'\ d + \gamma_s'\ (e-d) + \gamma_c'\ (H-e)}{H}$$

$\gamma_w = 62.4$ pcf

Where:

- γ_c' = Submerged unit weight of cohesive soil, pcf ;
- γ_s' = Submerged unit weight of cohesionless or semi-cohesionless soil, pcf ;
- γ_w = Unit weight of water, pcf;
- γ'_{avg} = Average submerged unit weight of soil, pcf ;
- q = Surcharge load at surface, psf;
- P_a = Lateral pressure, psf;
- P_1 = Active earth pressure, psf;
- P_q = Horizontal pressure due to surcharge, psf;
- P_w = Hydrostatic pressure due to groundwater, psf;
- H = Depth of braced excavation, feet

TRENCH SUPPORT EARTH PRESSURE

SUBMERGED COHESIVE SOIL INTERBEDDED WITH COHESIONLESS OR SEMI-COHESIONLESS SOIL

Job No. 1140205501

CUT IN COHESIVE SOIL,
DEPTH OF COHESIVE SOIL UNLIMITED ($T > 0.7\ B_d$)
L = LENGTH OF CUT

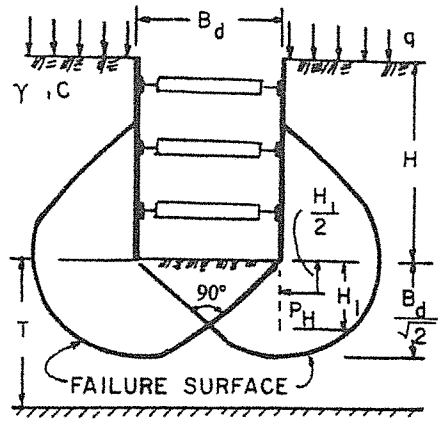

If sheeting terminates at base of cut:

$$\text{Safety factor, } F_S = \frac{N_C C}{\gamma H + q}$$

N_C = Bearing capacity factor, which depends on dimensions of the excavation : B_d , L and H (use N_C from graph below)

C = Undrained shear strength of clay in failure zone beneath and surrounding base of cut

γ = Wet unit weight of soil (see Table 2)

q = Surface surcharge (assumed q = 500 psf)

If safety factor is less than 1.5, sheeting or soldier piles must be carried below the base of cut to insure stability - (see note)

$$H_1 = \text{Buried length} = \frac{B_d}{2} \geq 5 \text{ feet}$$

Note : If soldier piles are used, the center to center spacing should not exceed 3 times the width or diameter of soldier pile .

Force on buried length, P_H:

If $H_1 > \frac{2}{3}\frac{B_d}{\sqrt{2}}$, $P_H = 0.7\ (\gamma\ HB_d - 1.4CH - \pi CB_d)$ in lbs/ linear foot

If $H_1 < \frac{2}{3}\frac{B_d}{\sqrt{2}}$, $P_H = 1.5H_1\ (\gamma\ H - \frac{1.4CH}{B_d} - \pi C)$ in lbs/ linear foot

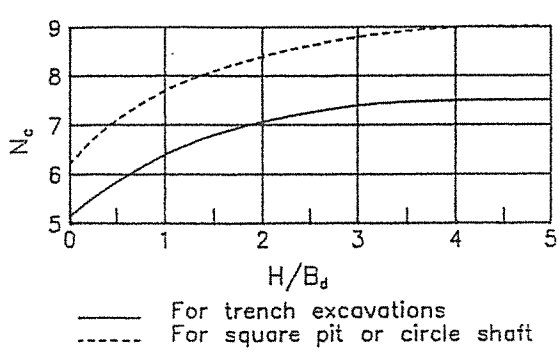

STABILITY OF BOTTOM
FOR
BRACED CUT

Job No. 1140205501

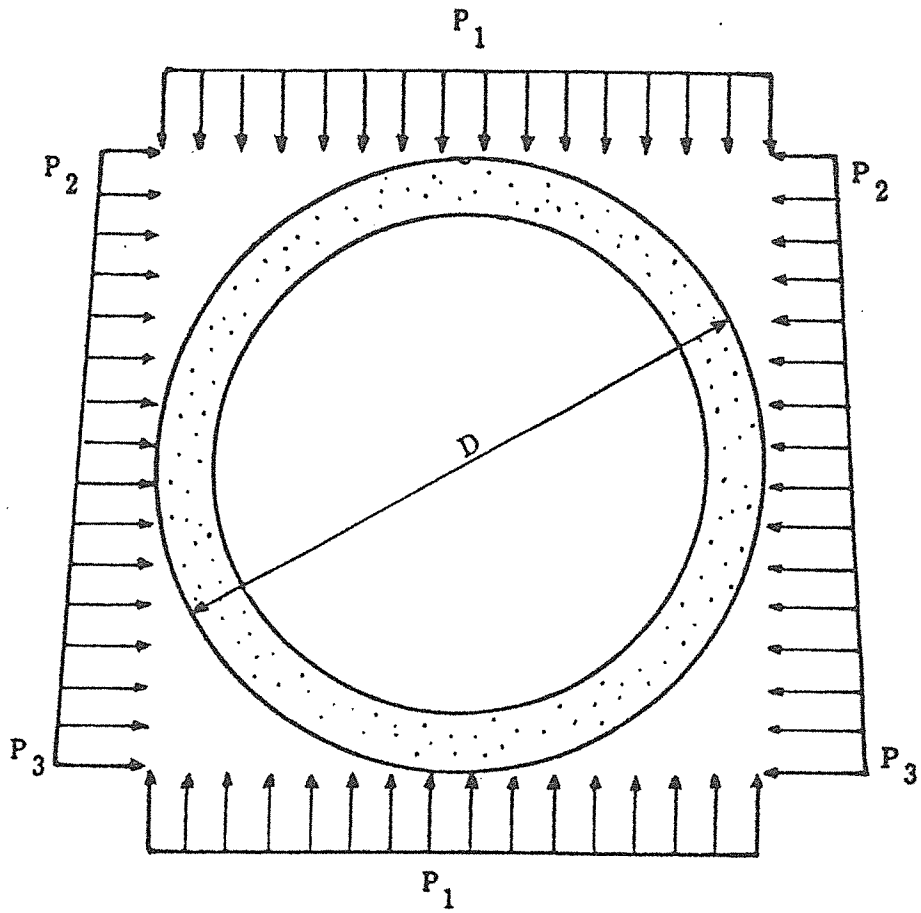

$$P_1 = [(H + \frac{D}{2}) \times (\gamma - \gamma_w) + D_w \times \gamma_w] + q_s \text{ , for } D_w < H + \frac{D}{2}$$

$$P_1 = [(H + \frac{D}{2}) \times \gamma] + q_s \text{ , for } D_w \geq H + \frac{D}{2}$$

$$P_2 = (H \times \gamma) + q_s$$

$$P_3 = [(H + D) \times \gamma] + q_s$$

Where: P_1, P_2, P_3 = Tunnel liner load, psf.

D = Tunnel outside diameter, ft.

H = Depth to top of tunnel; ft.

D_w = Depth to ground water level; ft.

γ = Wet unit weight of soil, pcf (see Table 3)

γ_w = Unit weight of water, 62.4 pcf

q_s = Surcharge load, psf.

EARTH PRESSURE
ON PIPE AND CASING AUGERING

Job No. 1140205501

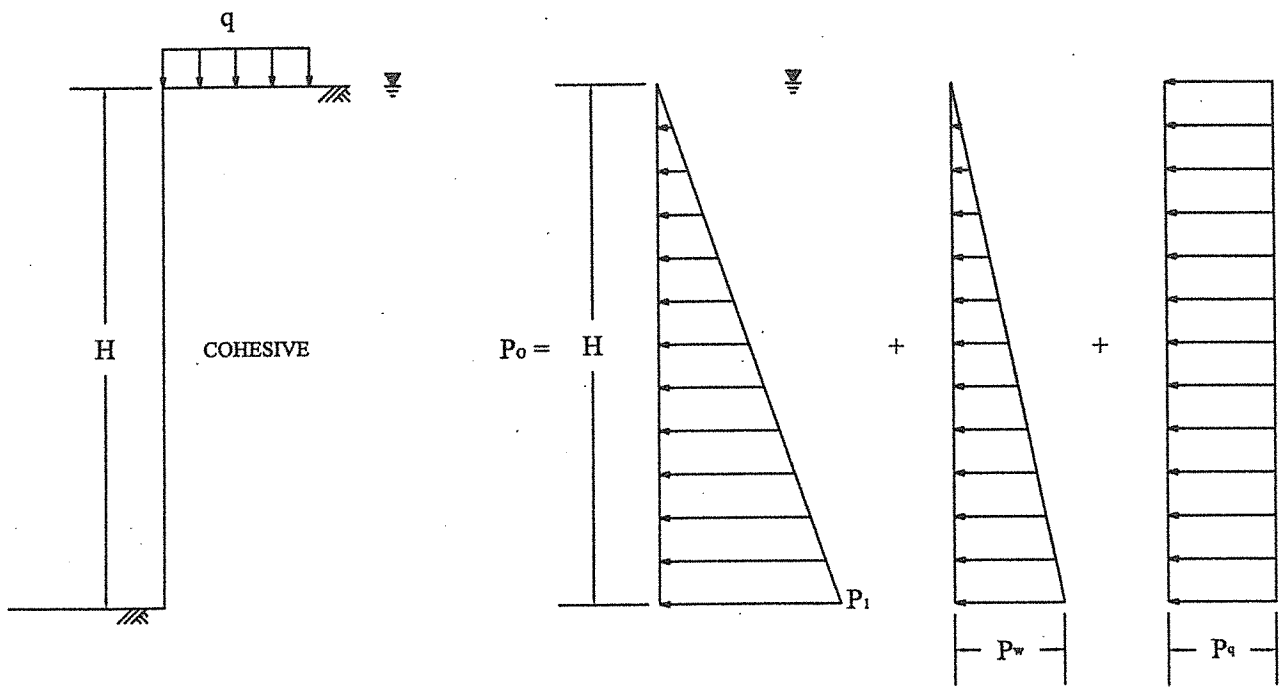

TYPICAL SOIL PARAMETERS

See Table 2 for typical values of soil parameters

$K_{oc} = 1.0$

PERMANENT WALL

$P_1 = K_{oc}\,\gamma_c'\,H$
$P_w = \gamma_w\,H = 62.4\,H$
$P_q = 0.5\,q$

Where:

γ_c' = Submerged unit weight of cohesive soil, pcf;
K_{oc} = Coefficient of at-rest earth pressure in cohesive soil;
γ_w = Unit weight of water, pcf;
q = Surcharge load at surface, psf;
P_o = Lateral pressure, psf;
P_1 = At-rest earth pressure, psf;
P_q = Horizontal pressure due to surcharge, psf;
P_w = Hydrostatic pressure due to groundwater, psf;
H = Depth of excavation, feet

LATERAL EARTH PRESSURE DIAGRAM FOR PERMANENT WALL

SUBMERGED COHESIVE SOIL

Job No. 1140205501

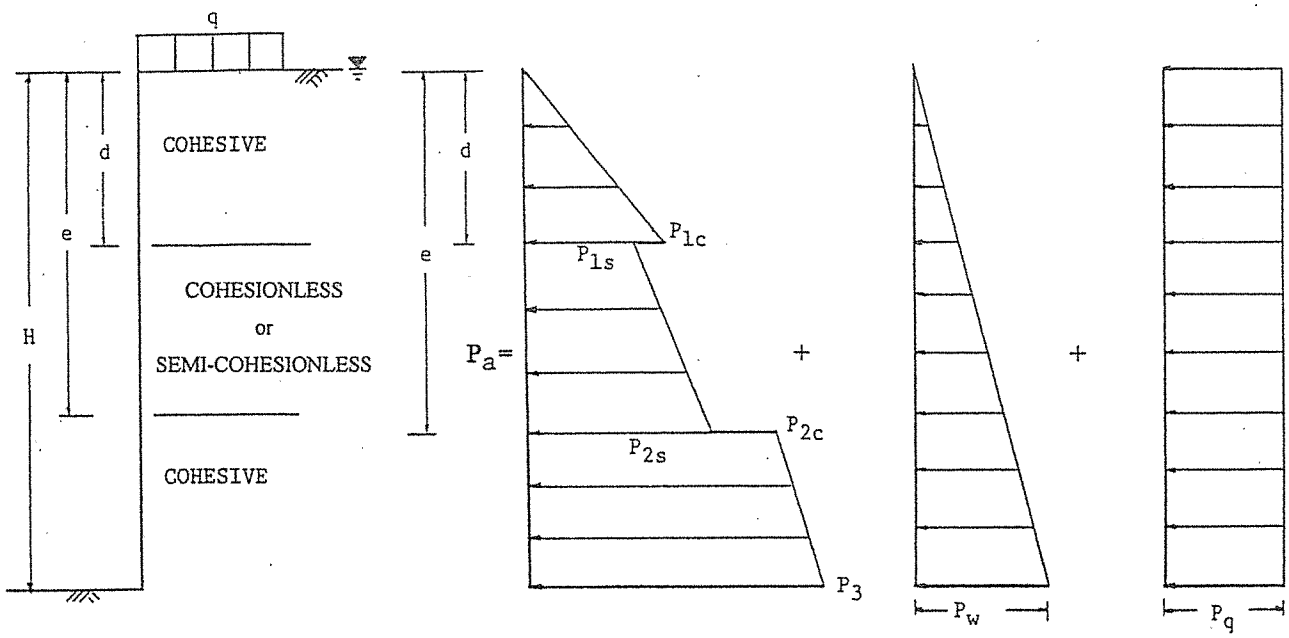

TYPICAL SOIL PARAMETERS

See Table 2 for typical values of soil parameters

$K_{oc} = 1.0$

$K_{os} = 1 - \sin\phi_s$

$\gamma_w = 62.4$ psf

PERMANENT WALL

$P_{1c} = \gamma'_c\, d\, K_{oc}$

$P_{1s} = \gamma'_c\, d\, K_{os}$

$P_{2s} = P_{1s} + \gamma'_s\, (e-d)\, K_{os}$

$P_{2c} = [\gamma'_c\, d + \gamma'_s\, (e-d)]\, K_{oc}$

$P_3 = [\gamma'_c\, d + \gamma'_s\, (e-d) + \gamma'_c\, (H-e)\,]\, K_{oc}$

$P_w = \gamma_w\, H = 62.4\, H$

$P_q = 0.5\, q$

Where:

γ_c' = Effective unit weight of cohesive soil, pcf;
γ_s' = Effective unit weight of cohesionless or semi-cohesionless soil, pcf;
ϕ_s = Internal friction angle of cohesionless or semi-cohesionless soil, degree;
K_{oc} = Coefficient of earth pressure at rest in cohesive soils;
Ko_{as} = Coefficient of earth pressure at rest in cohesionless or semi-cohesionless soil;
γ_w = Unit weight of water, pcf;
q = Surcharge load at surface, psf;
P_a = Lateral pressure, psf;
P_i, P_{ic}, P_{is} = Earth pressure at rest, psf; i = 1, 2, 3;
P_q = Horizontal pressure due to surcharge, psf;
P_w = Hydrostatic pressure due to groundwater, psf;
H = Height of wall, feet

LATERAL EARTH PRESSURE DIAGRAM FOR PERMANENT WALL

SUBMERGED COHESIVE SOIL INTERBEDDED WITH COHESIONLESS OR SEMI-COHESIONLESS SOIL

Job No. 1140205501

(a) DEAD WEIGHT OF STRUCTURE

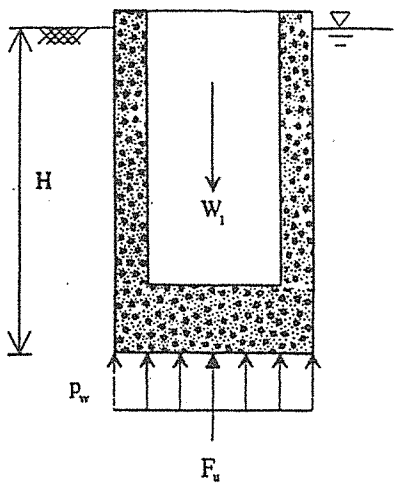

$p_w = H\gamma_w$

$F_u = A_b p_w$

$\frac{W_1}{Sf_1} = F_u$

See Table 2 for typical values of soil parameters

(b) WEIGHT OF SOIL ABOVE BASE EXTENSION PLUS DEAD WEIGHT OF STRUCTURE

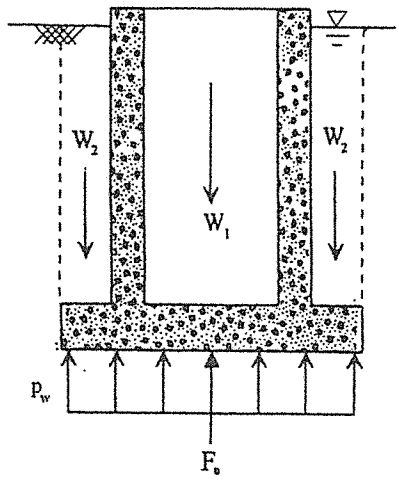

$p_w = H\gamma_w$

$F_u = A_b p_w$

$\frac{W_1}{Sf_1} + \frac{W_2}{Sf_2} = F_u$

(c) SOIL-WALL FRICTION PLUS DEAD WEIGHT OF STRUCTURE

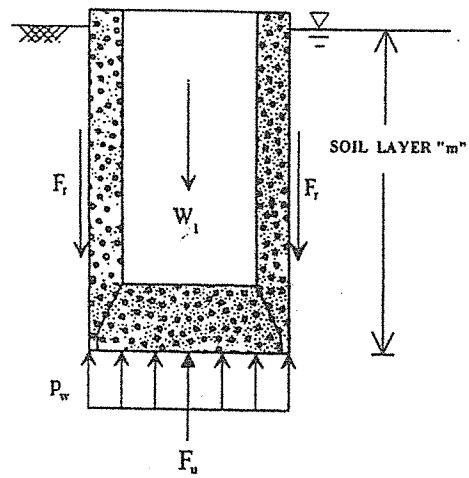

$p_w = H\gamma_w$

$F_u = A_b p_w$

$\frac{W_1}{Sf_1} + \frac{F_r}{Sf_3} = F_u$

Predominantly Cohesive Soils, $F_r = \alpha c_m A_m$

Predominantly Cohesionless Soils, $F_r = p_m A_m K \tan \delta_m$

Where:

A_b	=	area of base, sq. ft.
A_m	=	cylindrical surface area of layer "m", sq. ft.
c_m	=	undrained cohesion of soil layer "m", psf.
F_u	=	hydrostatic uplift force, lbs.
F_r	=	frictional resistance, lbs.
H	=	height of buried structure, ft.
K	=	coefficient of lateral pressure = 0.5.
p_m	=	average overburden pressure for layer "m," psf.
p_w	=	hydrostatic uplift pressure, psf.
$Sf_{1,2,3}$	=	factor of safety.
W_1	=	dead weight of concrete structure, lbs.
W_2	=	weight of backfill above base extension, lbs.
α	=	cohesion reduction factor = 0.5.
δ_m	=	friction angle between soil layer "m" and concrete wall, degrees = 0.75 ϕ_m
ϕ_m	=	internal angle of friction of soil layer "m", degrees.
γ_w	=	unit weight of water = 62.4 pcf.

UPLIFT PRESSURE AND RESISTANCE

TABLES

	Table
Summary of Boring Information	1
Geotechnical Design Parameter Summary: Open-cut Excavation	2
Geotechnical Design Parameter Summary: Trenchless Installation	3

TABLE 1

SUMMARY OF FIELD EXPLORATION

Boring No.	Boring Depth (feet)	Northing	Easting	Ground Surface Elevation (feet)
FRLS-1 (FRLS-1P)	27	13942789.43	3196015.33	52.43
FRLS-2	27	13942504.10	3196231.12	58.77
FRLS-3	27	13941921.66	3196455.94	56.16

Notes: Survey information was interpolated from the drawings provided by IDS Engineering Group.

TABLE 2

GEOTECHNICAL DESIGN PARAMETER SUMMARY
OPEN-CUT EXCAVATION AND ACCESS SHAFTS

Alignments	Boring Nos.	Stratigraphic Unit	Range of Depths, ft	Wet Unit Weight, γ, pcf	Submerged Unit Weight, γ', pcf	Undrained Cohesion, psf	Internal Friction Angle, φ, degree
10 to 15 inch sanitary sewer	FRLS-1	Cohesive	0-6	124	62	2,400	--
			6-8	130	65	2,000	--
			8-14	125	63	1,300	--
			14-27	125	63	1,000	--
	FRLS-2	Cohesive	0-6	127	64	2,800	--
			6-14	128	64	1,500	--
			14-23.5	131	66	600	--
		Cohesionless	23.5-25	106	53	--	30
		Cohesive	25-27	125	63	3,300	--
	FRLS-3	FILL	0-6	126	63	3,000	--
			6-10	126	63	600	--
		Cohesive	10-14	126	63	1,000	--
		Cohesionless	14-16	104	52	--	30
		Cohesive	16-27	120	60	2,000	--

Notes: 1) Cohesive soils include fat clay and lean clay.
2) Cohesionless soils include silty sand.
3) Fill soils include fat clay with sand.

TABLE 3
GEOTECHNICAL DESIGN PARAMETER SUMMARY
TRENCHLESS INSTALLATION

PROPERTY		COHESIVE SOILS [1]	Cohesionless Soils[2]
Wet Unit Weight, γ, pcf	0-6 ft.	124	--
	6-14 ft.	126	--
	14-16 ft.	125	104 (FRLS-3 only)
	16-23.5 ft.	125	--
	23.5-25 ft.	126	106 (FRLS-2 only)
	25-27 ft.	125	--
Submerged Unit Weight, γ', pcf	0-6 ft.	62	--
	6-14 ft.	63	--
	14-16 ft.	63	52 (FRLS-3 only)
	16-23.5 ft.	63	--
	23.5-25 ft.	63	53 (FRLS-2 only)
	25-27 ft.	63	--
Moisture Content (%)	0-6 ft.	23	--
	6-14 ft.	21	--
	14-16 ft.	16	25 (FRLS-3 only)
	16-23.5 ft.	27	--
	23.5-25 ft.	28	28 (FRLS-2 only)
	25-27 ft.	29	--
Undrained Properties			
Undrained Cohesion, C_u, psf	6-14 ft*	1,500	--
	14-16 ft*	600	--
	16-23.5 ft*	600	--
	23.5-25 ft*	1,000	--
Angle of Internal, ϕ, degrees	6-14 ft*	--	--
	14-16 ft*	--	30 (FRLS-3 only)
	16-23.5 ft*	--	--
	23.5-25 ft*	--	30 (FRLS-2 only)
Elastic Modulus, E, psf	6-14 ft*	450,000	--
	14-16 ft*	240,000	168,000 (FRLS-3 only)
	16-23.5 ft*	180,000	--
	23.5-25 ft*	300,000	252,000 (FRLS-2 only)
Coefficient of Lateral Earth Pressure at Rest, K_o	6-14 ft*	1.2	--
	14-16 ft*	1.2	0.5 (FRLS-3 only)
	16-23.5 ft*	1.2	--
	23.5-25 ft*	1.2	0.5 (FRLS-2 only)
Poisson's Ratio		0.45	
DRAINED PROPERTIES *			
Drained Cohesion, C', psf	6-14 ft*	0	--
	14-16 ft*	0	--
	16-23.5 ft*	0	--
	23.5-25 ft*	0	--
Angle of Internal Friction, ϕ', degrees	6-14 ft*	18	--
	14-16 ft*	22	30 (FRLS-3 only)
	16-23.5 ft*	20	--
	23.5-25 ft*	20	30 (FRLS-2 only)
Elastic Modulus, E, psf	6-14 ft*	270,000	--
	14-16 ft*	144,000	168,000 (FRLS-3 only)
	16-23.5 ft*	108,000	--
	23.5-25 ft*	180,000	252,000 (FRLS-2 only)

Notes: 1. Cohesive soils include fat clay and lean clay
2. Cohesionless soils include silty sand

* Within tunneling zone (one bore diameter, but not less than 6 feet, above and below tunnel bore).

APPENDIX A

	Figure
Log of Borings	A-1 thru A-3
Symbols and Terms Used on Boring Logs	A-4

LOG OF BORING NO. FRLS-1 (FRLS-1P)

PROJECT : City of Houston Phase II-Design for Renewal/Replacement of Fir Ridge Lift Station; WBS No. R-000267-0117-3; Houston, Texas

PROJECT NO. : 1140205501

LOCATION : N 13942789.43, E 3196015.33
Fir Ridge Drive; See Plan of Borings (Figure 2.1)

COMPLETION DEPTH : 27.0 FT.

SURFACE ELEVATION : 52.43 FT.

DATE : 09-22-14

SAMPLER : Shelby Tube/Split Spoon
DRY AUGER : 0.0 TO 16.0 FT.
WET ROTARY : 16.0 TO 27.0 FT.

ELEVATION, FEET	DEPTH, FEET	DESCRIPTION OF MATERIAL	STANDARD PENETRATION TEST, BLOWS PER FOOT	PERCENT PASSING NO. 200 SIEVE	DRY UNIT WEIGHT, PCF	NATURAL MOISTURE CONTENT, %	LIQUID LIMIT, %	PLASTIC LIMIT, %	PLASTICITY INDEX, %
52.4	0	4" Asphalt over 8.5" Oyster Shell							
51.4		Very stiff dark gray FAT CLAY (CH) -w/grass roots 12.5"-2' -gray 2'-4' -brown and gray 4'-8'				21			
				91	99	26	57	23	34
	5					27			
44.4						30			
		Stiff brown and gray LEAN CLAY (CL) w/calcareous nodules				25			
42.4	10	Stiff to very stiff yellowish brown and gray FAT CLAY (CH) w/ferrous stains -very stiff 12'-14'		98	98	26	60	24	36
38.4						23			
	15	Stiff brown LEAN CLAY (CL) w/silt seams		99		25	36	21	15
36.4		Very stiff brown FAT CLAY (CH) w/ferrous nodules and ferrous stains -medium stiff to very stiff 18'-20' -brown and gray 18'-27'				27			
	20			100	93	30	84	30	54
	25					26			
25.4						32			
	30	NOTE : See piezometer FRLS-1P for water level measurements.							
	35								

UNDRAINED SHEAR STRENGTH, TSF
○ HAND PENETROMETER
● UNCONFINED COMPRESSION
■ UNCONSOLIDATED-UNDRAINED TRIAXIAL COMPRESSION
△ TORVANE

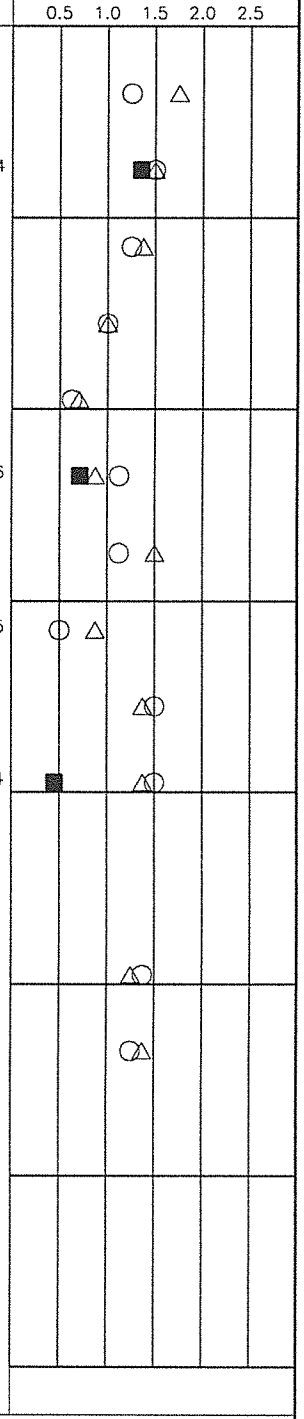

DEPTH TO WATER IN BORING :
▽: FREE WATER 1st ENCOUNTERED AT 16.0 FT. DURING DRILLING; AFTER 15.0 MIN. AT 14.0 FT.
▼: WATER DEPTH AT 14.0 FT., HOLE OPEN TO 27.0 FT. ON 10-23-14.

Geotest Engineering, Inc.

FIGURE A-1

LOG OF BORING NO. FRLS-2

PROJECT : City of Houston Phase II-Design for Renewal/Replacement of Fir Ridge Lift Station; WBS No. R-000267-0117-3; Houston, Texas

PROJECT NO. : 1140205501

LOCATION : N 13942504.10, E 3196231.12
Sunny Glen Drive; See Plan of Borings (Figure 2.2)

COMPLETION DEPTH : 27.0 FT.

SURFACE ELEVATION : 58.77 FT.

DATE : 09-22-14

SAMPLER : Shelby Tube/Split Spoon
DRY AUGER : 0.0 TO 18.0 FT.
WET ROTARY : 18.0 TO 27.0 FT.

ELEVATION, FEET	DEPTH, FEET	DESCRIPTION OF MATERIAL	STANDARD PENETRATION TEST, BLOWS PER FOOT	PERCENT PASSING NO. 200 SIEVE	DRY UNIT WEIGHT, PCF	NATURAL MOISTURE CONTENT, %	LIQUID LIMIT, %	PLASTIC LIMIT, %	PLASTICITY INDEX, %
58.8	0	4.25" Asphalt over 9" Oyster Shell							
57.7		Hard gray and brown FAT CLAY (CH) w/calcareous nodules and ferrous stains -w/ferrous nodules 2'-8' -very stiff to hard 4'-8'				23			
						21			
	5			95	106	21	50	21	29
						16			
50.8		Stiff to very stiff brown and gray LEAN CLAY (CL) w/silt seams							
48.8	10					6			
		Very stiff brown and gray FAT CLAY (CH) w/ferrous nodules and ferrous stains -w/sand seams, silt seams, and ferrous stains 10'-12'		98	106	22	55	22	33
44.8						28			
	15	Medium stiff to stiff brown and gray LEAN CLAY (CL) w/calcareous nodules		94	106	25	37	20	17
42.8		Very stiff FAT CLAY (CH) w/calcareous nodules				27			
40.8		Very stiff brown LEAN CLAY (CL) w/calcareous nodules -medium stiff to stiff 18'-20'		96		25	32	21	11
	20								
35.3		Medium dense brown SILTY SAND (SM)	18	18		28			
33.8	25	Very stiff to hard brown and gray FAT CLAY (CH) w/ferrous nodules and ferrous stains				29			
31.8									
	30								
	35								

SYMBOL / SAMPLES

UNDRAINED SHEAR STRENGTH, TSF
○ HAND PENETROMETER
● UNCONFINED COMPRESSION
■ UNCONSOLIDATED-UNDRAINED TRIAXIAL COMPRESSION
△ TORVANE

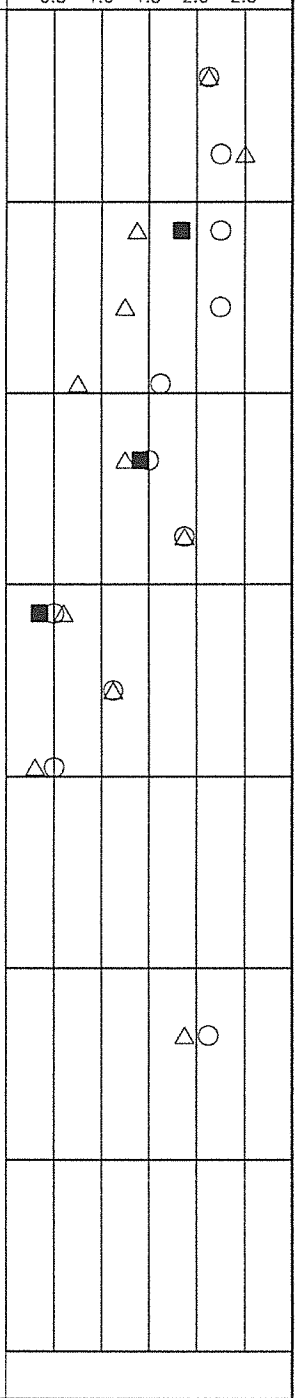

DEPTH TO WATER IN BORING :
▽: FREE WATER 1st ENCOUNTERED AT 18.0 FT. DURING DRILLING; AFTER 15.0 MIN. AT 15.8 FT.
HOLE OPEN TO 27.0 FT. AT END OF DRILLING.

Geotest Engineering, Inc.

FIGURE A-2

LOG OF BORING NO. FRLS-3

PROJECT : City of Houston Phase II-Design for Renewal/Replacement of Fir Ridge Lift Station; WBS No. R-000267-0117-3; Houston, Texas — PROJECT NO. : 1140205501

LOCATION : N 13941921.66, E 3196455.94 Sunny Glen Drive; See Plan of Borings (Figure 2.3) — COMPLETION DEPTH : 27.0 FT.

SURFACE ELEVATION : 56.16 FT. — DATE : 09-22-14

SAMPLER : Shelby Tube/Split Spoon
DRY AUGER : 0.0 TO 14.0 FT.
WET ROTARY : 14.0 TO 27.0 FT.

ELEVATION, FEET	DEPTH, FEET	DESCRIPTION OF MATERIAL	STANDARD PENETRATION TEST, BLOWS PER FOOT	PERCENT PASSING NO. 200 SIEVE	DRY UNIT WEIGHT, PCF	NATURAL MOISTURE CONTENT, %	LIQUID LIMIT, %	PLASTIC LIMIT, %	PLASTICITY INDEX, %
56.2	0	9.5" Limestone and Sand							
55.4		FILL: very stiff brown and gray fat clay w/sand, shell and shell fragments				24			
		-w/ferrous stains 4'-10'				21			
	5			84	105	21	63	24	39
		-stiff to very stiff 7'-8'				23			
						29			
46.2	10	Very stiff dark gray FAT CLAY (CH) w/ferrous nodules and ferrous stains				23			
		-stiff brown and gray w/sand seams 12'-14'		87	101	25	51	21	30
42.2	15	Medium dense brown and gray SILTY SAND (SM)	12	49		25			
40.2		Very stiff brown and gray FAT CLAY (CH) w/silt seams				31			
		-w/sand seams 18'-20'				29			
	20								
		-stiff to very stiff gray and yellowish brown 23'-25'		97	89	35	98	34	64
	25	-slickensided w/ferrous stains 23'-27'							
29.2		-gray and brown 25'-27'				34			
	30								
	35								

UNDRAINED SHEAR STRENGTH, TSF
○ HAND PENETROMETER
● UNCONFINED COMPRESSION
■ UNCONSOLIDATED-UNDRAINED TRIAXIAL COMPRESSION
△ TORVANE

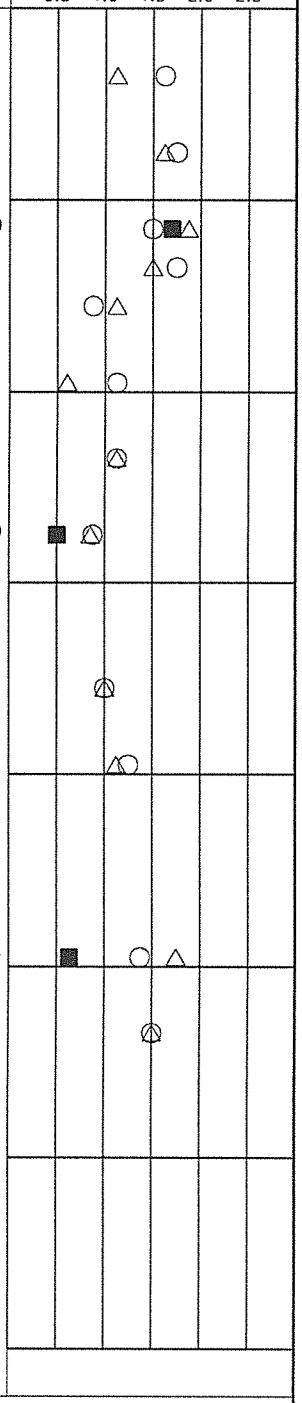

DEPTH TO WATER IN BORING :
▽: FREE WATER 1st ENCOUNTERED AT 14.0 FT. DURING DRILLING; AFTER 15.0 MIN. AT 8.3 FT.
HOLE OPEN TO 27.0 FT. AT END OF DRILLING.

Geotest Engineering, Inc.

FIGURE A-3

Job No. 1140205501

SYMBOLS AND TERMS USED ON BORING LOGS

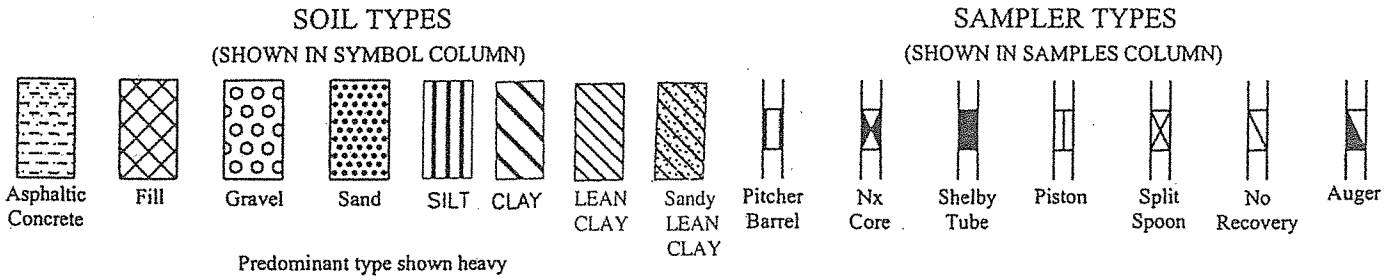

TERMS DESCRIBING CONSISTENCY OR CONDITION

Basic Soil Type	Density or Consistency	Standard Penetration Resistance, (1) Blows/ft.	Unconfined Compressive Strength (q_u), (2) Tons/sq. ft.
Cohesionless	Very loose	Less than 4	Not applicable
	Loose	4 to <10	Not applicable
	Medium dense	10 to <30	Not applicable
	Dense	30 to <50	Not applicable
	Very dense	50 or greater	Not applicable
Cohesive	Very soft	Less than 2	Less than 0.25
	Soft	2 to <4	0.25 to <0.5
	Firm/Medium stiff	4 to <8	0.5 to <1.0
	Stiff	8 to <15	1.0 to <2.0
	Very stiff	15 to <30	2.0 to <4.0
	Hard	30 or greater	4 or greater

(1) Number of blows from 140-lb. weight falling 30-in. to drive 2-in. OD, 1-3/8-in. ID, split barrel sampler (ASTM D1586)

(2) q_u may also be approximated using a pocket penetrometer

TERMS CHARACTERIZING SOIL STRUCTURE

Parting: -paper thin in size Seam: -1/8" to 3" thick Layer: -greater than 3"

Slickensided	- having inclined planes of weakness that are slick and glossy in appearance.
Fissured	- containing shrinkage cracks, frequently filled with fine sand or silt; usually more or less vertical.
Laminated	- composed of thin layers of varying color and texture.
Interbedded	- composed of alternate layers of different soil types.
Calcareous	- containing appreciable quantities of calcium carbonate.
Well graded	- having wide range in grain sizes and substantial amounts of all intermediate particle sizes.
Poorly graded	- predominantly of one grain size, or having a range of sizes with some intermediate size missing.
Flocculated	- pertaining to cohesive soils that exhibit a loose knit or flakey structure.

Job No. 1140205501

PIEZOMETER INSTALLATION REPORT

PROJECT NAME: PHASE II – DESIGN FOR THE RENEWAL/REPLACEMENT OF FIVE LIFT STATIONS FOR THE COH; HOUSTON, TEXAS	PIEZOMETER NUMBER: FRLS-1P

GEOTECHNICAL CONSULTANT GEOTEST ENGINEERING, INC.	DESIGN CONSULTANT IDS ENGINEERING GROUP	HOUSTON, TEXAS

COMPLETION DATE 09-22-14
DRY AUGERED 0 TO 16 FT
WASH BORED 16 TO 27 FT
DRILLING FLUID: WATER

DEVELOPMENT DATE: 09-22-14
METHOD OF DEVELOPMENT:
BAILING

WATER LEVEL READINGS:

DATE	DEPTH (TOG)	ELEVATION
09-23-14	11.0	41.4
10-23-14	14.0	38.4

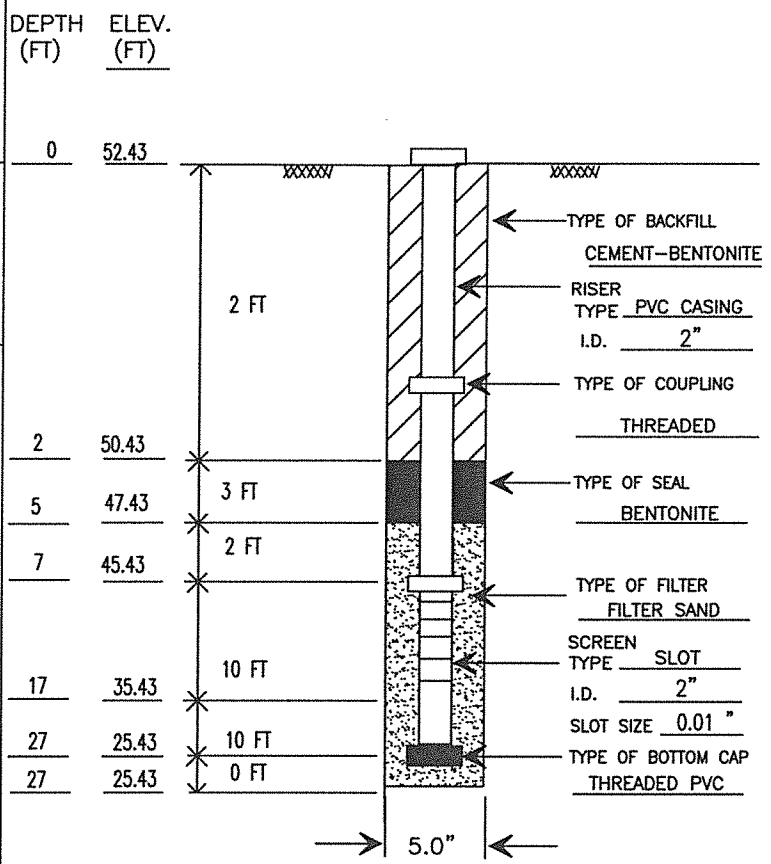

(NOT TO SCALE)

REMARKS:

NOTES:
1. DIMENSIONS NOMINAL UNLESS OTHERWISE NOTED
2. TOG = TOP OF GROUND

DRILLED BY: DG	STARTED: 09-22-14	NORTHING: 13942789.43 EASTING: 3196015.33
LOGGED BY: JG	COMPLETED: 09-22-14	GROUND LEVEL (MSL): 52.43
CHECKED BY: NK	APPROVED BY: MB	SHEET 1 OF 1

APPENDIX B

	Figure
Summary of Laboratory Test Results	B-1 thru B-3
Grain Size Distribution Curves	B-4

SUMMARY OF LABORATORY TEST RESULTS

GEOTEST ENGINEERING, INC.

PROJECT NAME: City of Houston Phase II–Design for Renewal/Replacement of Fir Ridge Lift Station; WBS No. R–000267–0117–3; Houston, Texas

PROJECT NUMBER: 1140205501

BORING NO.	SAMPLE No.	SAMPLE Depth (ft.) Top	SAMPLE Depth (ft.) Bottom	SAMPLE Type	SPT (blows/ft.)	WATER CONTENT (%)	DRY DENSITY (pcf)	ATTERBERG LIMITS LL	ATTERBERG LIMITS PL	ATTERBERG LIMITS PI	PASSING NO. 200 SIEVE (%)	UNCONFINED COMPRESSION TEST Shear Strength (tsf)	TRIAXIAL COMPRESSION TEST (U–U) Shear Strength (tsf)	TRIAXIAL COMPRESSION TEST (U–U) Conf. Press. (tsf)	TORVANE Shear Strength (tsf)	POCKET PENE–TROMETER Shear Strength (tsf)	TYPE OF MATERIAL
FRLS–1 (FRLS–1P)	2	1.0	2.0	UD		21									1.75	1.25	Fat Clay
	3	2.0	4.0	UD		26	99	57	23	34	91		1.35	0.29	1.50	1.50	Fat Clay
	4	4.0	6.0	UD		27									1.38	1.25	Fat Clay
	5	6.0	8.0	UD		30									1.00	1.00	Fat Clay
	6	8.0	10.0	UD		25									0.70	0.63	Lean Clay
	7	10.0	12.0	UD		26	98	60	24	36	98		0.71	0.86	0.88	1.13	Fat Clay
	8	12.0	14.0	UD		23									1.50	1.13	Fat Clay
	9	14.0	16.0	UD		25		36	21	15	99				0.88	0.50	Lean Clay
	10	16.0	18.0	UD		27									1.38	1.50	Fat Clay
	11	18.0	20.0	UD		30	93	84	30	54	100		0.45	1.44	1.38	1.50	Fat Clay
	12	23.0	25.0	UD		26									1.25	1.38	Fat Clay
	13	25.0	27.0	UD		32									1.38	1.25	Fat Clay

LEGEND:
UD = UNDISTURBED SAMPLE, EXTRUDED IN FIELD
SS = SPLIT SPOON SAMPLE
AG = AUGER CUTTINGS
PB = PITCHER BARREL SAMPLE
Nx = Nx–DOUBBLE BARREL SAMPLE

SPT = Standard Penetration Test
LL = Liquid Limit
PL = Plastic Limit
PI = Plasticity Index

FIGURE B–1

SUMMARY OF LABORATORY TEST RESULTS

GEOTEST ENGINEERING, INC.

PROJECT NAME: City of Houston Phase II–Design for Renewal/Replacement of Fir Ridge Lift Station; WBS No. R–000267–0117–3; Houston, Texas

PROJECT NUMBER: 1140205501

BORING NO.	SAMPLE No.	SAMPLE Depth (ft.) Top	SAMPLE Depth (ft.) Bottom	SAMPLE Type	SPT (blows/ft.)	WATER CONTENT (%)	DRY DENSITY (pcf)	ATTERBERG LIMITS LL	ATTERBERG LIMITS PL	ATTERBERG LIMITS PI	PASSING NO. 200 SIEVE (%)	UNCONFINED COMPRESSION TEST Shear Strength (tsf)	TRIAXIAL COMPRESSION TEST (U–U) Shear Strength (tsf)	TRIAXIAL COMPRESSION TEST (U–U) Conf. Press. (tsf)	TORVANE Shear Strength (tsf)	POCKET PENE–TROMETER Shear Strength (tsf)	TYPE OF MATERIAL
FRLS–2	2	1.1	2.0	UD		23									2.13	2.13	Fat Clay
	3	2.0	4.0	UD		21									2.50	2.25	Fat Clay
	4	4.0	6.0	UD		21	106	50	21	29	95		1.84	0.43	1.38	2.25	Fat Clay
	5	6.0	8.0	UD		16									1.25	2.25	Fat Clay
	6	8.0	10.0	UD		6									0.75	1.63	Lean Clay
	7	10.0	12.0	UD		22	106	55	22	33	98		1.41	0.86	1.25	1.50	Fat Clay
	8	12.0	14.0	UD		28									1.88	1.88	Fat Clay
	9	14.0	16.0	UD		25	106	37	20	17	94		0.35	1.15	0.60	0.50	Lean Clay
	10	16.0	18.0	UD		27									1.13	1.13	Fat Clay
	11	18.0	20.0	UD		25		32	21	11	96				0.30	0.50	Lean Clay
	12	23.5	25.0	SS	18	28					18						Silty Sand
	13	25.0	27.0	UD		29									1.88	2.13	Fat Clay

LEGEND:
UD = UNDISTURBED SAMPLE, EXTRUDED IN FIELD
SS = SPLIT SPOON SAMPLE
AG = AUGER CUTTINGS
PB = PITCHER BARREL SAMPLE
Nx = Nx–DOUBBLE BARREL SAMPLE

SPT = Standard Penetration Test
LL = Liquid Limit
PL = Plastic Limit
PI = Plasticity Index

FIGURE B–2

SUMMARY OF LABORATORY TEST RESULTS

GEOTEST ENGINEERING, INC.

PROJECT NAME: City of Houston Phase II–Design for Renewal/Replacement of Fir Ridge Lift Station; WBS No. R–000267–0117–3; Houston, Texas

PROJECT NUMBER: 1140205501

BORING NO.	SAMPLE No.	SAMPLE Depth (ft.) Top	SAMPLE Depth (ft.) Bottom	SAMPLE Type	SPT (blows/ft.)	WATER CONTENT (%)	DRY DENSITY (pcf)	ATTERBERG LIMITS LL	ATTERBERG LIMITS PL	ATTERBERG LIMITS PI	PASSING NO. 200 SIEVE (%)	UNCONFINED COMPRESSION TEST Shear Strength (tsf)	TRIAXIAL COMPRESSION TEST (U–U) Shear Strength (tsf)	TRIAXIAL COMPRESSION TEST (U–U) Conf. Press. (tsf)	TORVANE Shear Strength (tsf)	POCKET PENE–TROMETER Shear Strength (tsf)	TYPE OF MATERIAL
FRLS–3	2	0.8	2.0	UD		24									1.13	1.63	Fill
	3	2.0	4.0	UD		21									1.63	1.75	Fill
	4	4.0	6.0	UD		21	105	63	24	39	84		1.70	0.43	1.88	1.50	Fill
	5	6.0	7.0	UD		23									1.50	1.75	Fill
	6	7.0	8.0	UD											1.13	0.88	Fill
	7	8.0	10.0	UD		29									0.60	1.13	Fill
	8	10.0	12.0	UD		23									1.13	1.13	Fat Clay
	9	12.0	14.0	UD		25	101	51	21	30	87		0.50	1.01	0.85	0.88	Fat Clay
	10	14.5	16.0	SS	12	25					49						Silty Sand
	11	16.0	18.0	UD		31									1.00	1.00	Fat Clay
	12	18.0	20.0	UD		29									1.13	1.25	Fat Clay
	13	23.0	25.0	UD		35	89	98	34	64	97		0.63	1.80	1.75	1.38	Fat Clay
	14	25.0	27.0	UD		34									1.50	1.50	Fat Clay

LEGEND:
UD = UNDISTURBED SAMPLE, EXTRUDED IN FIELD
SS = SPLIT SPOON SAMPLE
AG = AUGER CUTTINGS
PB = PITCHER BARREL SAMPLE
Nx = Nx–DOUBBLE BARREL SAMPLE

SPT = Standard Penetration Test
LL = Liquid Limit
PL = Plastic Limit
PI = Plasticity Index

FIGURE B–3

Job No. 1140205501

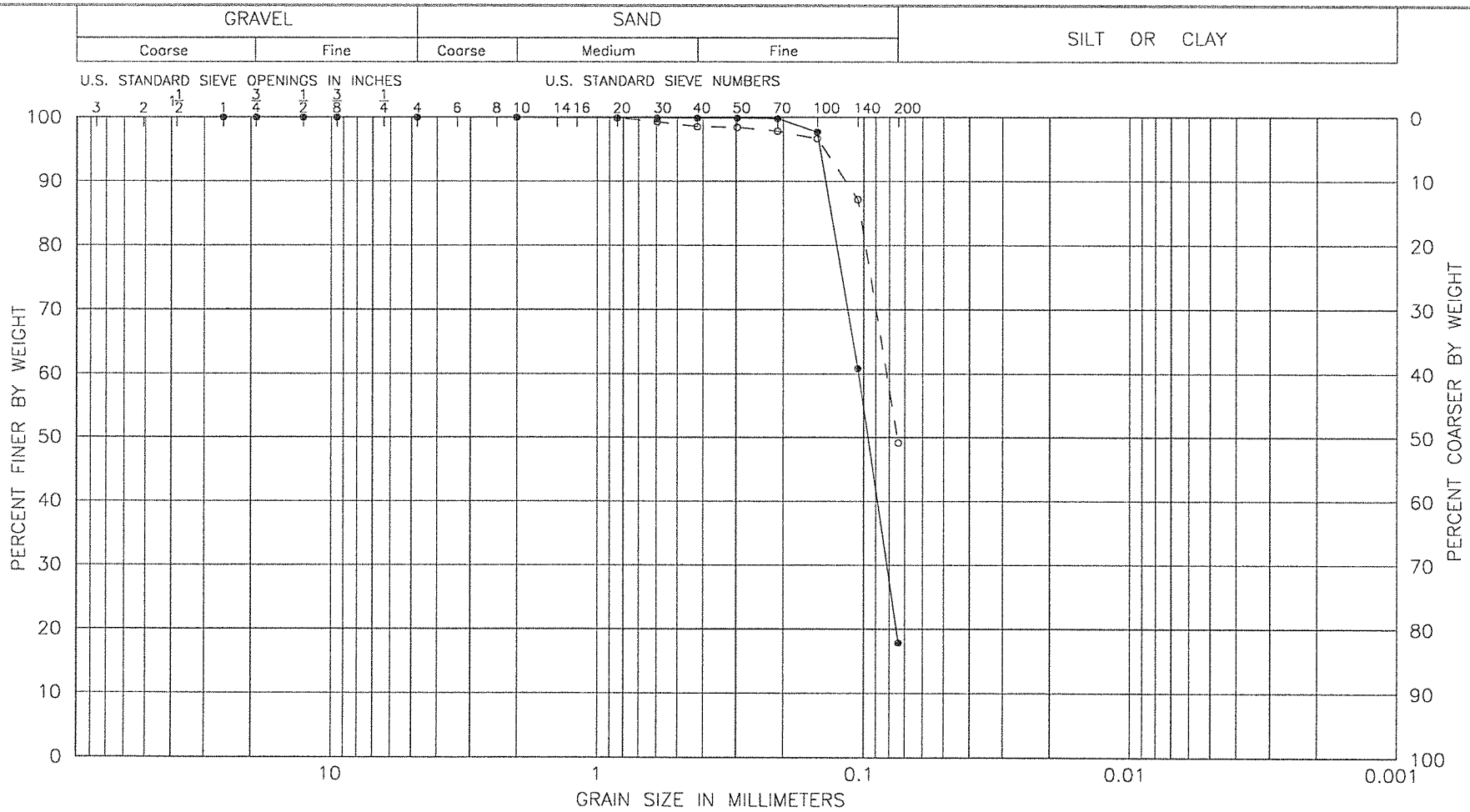

LEGEND	BORING NO.	SAMPLE NO.	DEPTH FT.	SAMPLE DESCRIPTION
●-●-●-●	FRLS-2	S-11	23.5-25.0	Brown silty sand
○-○-○-○	FRLS-3	S-8	14.5-16.0	Brown and gray silty sand

GRAIN SIZE DISTRIBUTION CURVES

Geotest Engineering, Inc.

FIGURE B-4

APPENDIX C

TDLR Piezometer Installation and Abandonment Reports

STATE OF TEXAS WELL REPORT for Tracking #384681

Owner:	**Geotest Engineering, Inc.**	Owner Well #:	**PZ - 1 (2055)**
Address:	**5600 Bintliff Dr. Houston , TX 77036**	Grid #:	**60-64-7**
Well Location:	**204 Fir Ridge Huffman , TX 77336**	Latitude:	**30° 01' 43" N**
Well County:	**Harris**	Longitude:	**095° 07' 14" W**
Elevation:	**No Data**	GPS Brand Used:	**Lowrance XOG**
Type of Work:	**New Well**	Proposed Use:	**Monitor**

Drilling Date:	Started: **9/22/2014** Completed: **9/22/2014**
Diameter of Hole:	Diameter: **5 in From Surface To 27 ft**
Drilling Method:	Other: **auger**
Borehole Completion:	**Straight Wall**
Annular Seal Data:	1st Interval: **From 0 ft to 2 ft with 1/2 Portland (#sacks and material)** 2nd Interval: **From 2 ft to 5 ft with 1 Bentonite (#sacks and material)** 3rd Interval: **No Data** Method Used: **Poured** Cemented By: **Dempsey Gearen Jr.** Distance to Septic Field or other Concentrated Contamination: **na ft** Distance to Property Line: **na ft** Method of Verification: **No Data** Approved by Variance: **No Data**
Surface Completion:	**Alternative Procedure Used**

Water Level:	Static level: **14 ft. below land surface on 9/22/2014** Artesian flow: **No Data**
Packers:	**Homemade 5'**
Plugging Info:	Casing or Cement/Bentonite left in well: **No Data**
Type Of Pump:	**Other: none** Depth to pump bowl: **(No Data) ft**
Well Tests:	**Bailer** Yield: **1/3 GPM with (No Data) ft drawdown after (No Data) hours**

Water Quality:	Type of Water: **good** Depth of Strata: **1 ft.** Chemical Analysis Made: **No** Did the driller knowingly penetrate any strata which contained undesirable constituents: **No**
Certification Data:	The driller certified that the driller drilled this well (or the well was drilled under the driller's direct supervision) and that each and all of the statements herein are true and correct. The driller understood that failure to complete the required items will result in the log(s) being returned for completion and resubmittal.

Company Information:	**Gearen Drilling** **32126 Rochen Rd.** **Waller , TX 77484**
Driller License Number:	**2836**
Licensed Well Driller Signature:	**Dempsey Gearen Jr.**
Registered Driller Apprentice Signature:	**No Data**
Apprentice Registration Number:	**No Data**
Comments:	**Piezometer**

IMPORTANT NOTICE FOR PERSONS HAVING WELLS DRILLED CONCERNING CONFIDENTIALITY

TEX. OCC. CODE Title 12, Chapter 1901.251, authorizes the owner (owner or the person for whom the well was drilled) to keep information in Well Reports confidential. The Department shall hold the contents of the well log confidential and not a matter of public record if it receives, by certified mail, a written request to do so from the owner.

Please include the report's Tracking number (Tracking **#384681**) on your written request.

Texas Department of Licensing & Regulation
P.O. Box 12157
Austin, TX 78711
(512) 463-7880

DESC. & COLOR OF FORMATION MATERIAL

From (ft)	To (ft)	Description
0	**4 1/2"**	**Asphalt**
4 1/2"	**12 1/2"**	**Shell**
12 1/2	**8'**	**Dk G Clay**
8	**16**	**Br + G Si Clay**
16	**27**	**Br Clay**
		Piezometer

CASING, BLANK PIPE & WELL SCREEN DATA

Dia.	New/Used	Type	Setting From/To
2	**New**	**PVC Blank**	**0 - 7 Sch 40**
2	**New**	**PVC Slotted**	**7 - 17 .010**
2	**New**	**PVC Blank**	**17 - 27 Sch 40**

STATE OF TEXAS PLUGGING REPORT for Tracking #98793

Owner:	**Geotest Engineering, Inc.**	Owner Well #:	**PZ - 1 (2055)**
Address:	**5600 Bintliff Dr. Houston , TX 77036**	Grid #:	**60-64-7**
Well Location:	**204 Fir Ridge Huffman , TX 77336**	Latitude:	**30° 01' 43" N**
Well County:	**Harris**	Longitude:	**095° 07' 14" W**
		GPS Brand Used:	**Lowrance XOG**

Well Type: **Monitor**

HISTORICAL DATA ON WELL TO BE PLUGGED

Original Well Driller:	**Dempsey Gearen Jr.**
Driller's License Number of Original Well Driller:	**2836**
Date Well Drilled:	**9/22/2014**
Well Report Tracking Number:	**384681**
Diameter of Borehole:	**5 inches**
Total Depth of Borehole:	**27 feet**

Date Well Plugged:	**12/31/2014**
Person Actually Performing Plugging Operation:	**Dempsey Gearen Jr.**
License Number of Plugging Operator:	**2836**
Plugging Method:	**Tremmie pipe cement from bottom to top.**
Plugging Variance #:	**No Data**
Casing Left Data:	1st Interval: **0 inches diameter, (No Data) ft to (No Data) ft** 2nd Interval: **No Data** 3rd Interval: **No Data**
Cement/Bentonite Plugs Placed in Well:	1st Interval: **From 0 ft to 27 ft; Sack(s)/type of cement used: 1 1/2 Portland** 2nd Interval: **No Data** 3rd Interval: **No Data** 4th Interval: **No Data** 5th Interval: **No Data**

Certification Data:	The plug installer certified that the plug installer plugged this well (or the well was plugged under the plug installer's direct supervision) and that each and all of the statements herein are true and correct. The plug installer understood that failure to complete the required items will result in the log(s) being returned for completion and resubmittal.
Company Information:	**Gearen Drilling** **32126 Rochen Rd.** **Waller , TX 77484**
Plug Installer License Number:	**2836**
Licensed Plug Installer Signature:	**Dempsey Gearen Jr.**
Registered Plug Installer Apprentice Signature:	**No Data**
Apprentice Registration Number:	**No Data**
Plugging Method Comments:	**No Data**

Please include the plugging report's tracking number (Tracking #**98793**) on your written request.

Texas Department of Licensing & Regulation
P.O. Box 12157
Austin, TX 78711
(512) 463-7880

APPENDIX D

Letter from IDS Engineering Group

IDS
Engineering Group

Sent via e-mail and via USPS

February 17, 2015

Mr. Iraj M. Ranjbar, P.E.
Managing Engineer
City of Houston
Department of Public Works and Engineering
Wastewater Engineering Section
611 Walker, 15th Floor
Houston, Texas 77002

Attention: Farid Sadeghian, P.E.

Reference: Lift Station Renewal and Replacement
City of Houston; WBS No. R-000267-0117-3
IDS Job No. 0057-072-00

Dear Mr. Ranjbar:

This letter provides formal response to review comment No. 1 made in a letter to you dated January 21, 2015 by Mr. Masodur Mollah, P.E. comment made on the draft geotechnical report prepared by Geotest Engineering;

Comment – Pages 3 and 11: Geotest mentions that the depth of the relief sewer ranges from 12 to 20 feet. However, in the proposal, the maximum depth of the relief sewer was about 17 feet and the maximum proposed boring depth was 27 feet. According to the Table 11.1 of the City of Houston Department of Public Works and Engineering Infrastructure Design Manual, the minimum boring depth should be the trench depth plus ten feet for trenches greater than 10 to 25 feet deep. Therefore, IDS needs to inform the City if adequate soils information is available for the design and construction of relief sewer.

Response – Three (3) borings were taken for the project, FRLS-1, 2 & 3. Near boring FRLS-2, the flowline depth of the proposed relief sewer is approximately 20 feet deep. The proposed flowlines of the relief sewer near borings FRLS- 1 & 3 is less than 17 feet deep. This occurs due to a rise in the existing natural ground near boring FRLS-2 which happens to be near the middle of the project. This is illustrated in the boring log profile presented in Figure 2.3 of the report. We can interpolate between borings FRLS-1 & 3 and make a determination that the soils below 27 feet deep at boring FRLS-2 are clay soils. Therefore, it is our opinion, based on this information and the opinion of Geotest Engineering, we have adequate information to proceed with the design and construction of the relief sewer.

13333 Northwest Freeway, Suite 300, Houston, Texas 77040
TBPE F-2726 | TBPLS 10110700 & 10110704
t 713.462.3178 f 713.462.1631
idsengineeringgroup.com

If you have any questions or concerns, please do not hesitate to call me at 713.462.3178.

Sincerely,

Chad A. Nesvadba, P.E.
Project Manager

\\nt03\jobs\0000\005707200 Lift Station Renewal & Replacement_2012\200 PROJ MGMT\010 Corres\COH\Geotech Comment Letter 021715.docx