GEOTECHNICAL INVESTIGATION

GROUND STORAGE TANK NO. 3 AT
FOREST COVE NO. 2 WATER PLANT
1110 MUSTANG TRAIL
WBS NO. S-000600-0046-4
HOUSTON, TEXAS

Reported to

IDS Engineering Group
Houston, Texas

by

Aviles Engineering Corporation
5790 Windfern
Houston, Texas 77041
713-895-7645

REPORT NO. G174-14

June 2015

June 12, 2015

Mr. Marcel Khouw, P.E.
IDS Engineering Group
13333 Northwest Freeway, Suite 300
Houston, Texas 77040

Reference: **Geotechnical Investigation**
Ground Storage Tank No. 3
Forest Cove No. 2 Water Plant
1110 Mustang Trail
WBS No.: S-000600-0046-4
Houston, Texas
AEC Report No. G174-14

Dear Mr. Khouw,

Aviles Engineering Corporation (AEC) is pleased to present this report of our geotechnical investigation for the above referenced project. This investigation was authorized on September 10, 2014 by Mr. Marcel Khouw, P.E., Project Manager of IDS, based upon AEC Proposal No. G2014-11-12, dated November 13, 2014.

AEC appreciates the opportunity to be of service to you. Please call us if you have any questions or comments concerning this report or when we can be of further assistance.

Respectfully submitted,
Aviles Engineering Corporation
(TBPE Firm Registration No. F-42)

STATE OF TEXAS
WILBER L. WANG
99226
LICENSED
PROFESSIONAL ENGINEER

Wilber L. Wang, P.E.
Senior Engineer

Shou Ting Hu, M.S.C.E., P.E.
President

Reports Submitted: 3 IDS Engineering Group
1 File (electronic)

Z:\ENGINEERING\REPORTS\2014\174-14 GST NO. 3 AT FOREST COVE NO. 2 WATER PLANT - IDS (WILBER)\G174-14 FINAL.DOCX

AVILES ENGINEERING CORP.

TABLE OF CONTENTS

EXECUTIVE SUMMARY i
1.0 INTRODUCTION 1
1.1 Project Description 1
1.2 Purpose and Scope 1
2.0 SUBSURFACE EXPLORATION 2
3.0 LABORATORY TESTING 3
4.0 SITE CONDITIONS 3
4.1 Subsurface Conditions 4
4.2 Subsurface Variations 5
5.0 ENGINEERING ANALYSIS AND RECOMMENDATIONS 5
5.1 Demolition of Existing Tank Foundation 6
5.2 220,000 Gallon Ground Storage Tank 6
5.2.1 Tank Foundation 6
5.2.2 Tank Pad Preparation 8
5.3 Installation of Underground Utilities by Open-Cut Method 8
5.3.1 Geotechnical Parameters for Underground Utilities 8
5.3.2 Loadings on Pipes 9
5.3.3 Trench Stability 10
5.3.4 Thrust Force Design Recommendations 12
5.3.5 Bedding and Backfill 14
5.4 Select Fill 14
6.0 CONSTRUCTION CONSIDERATIONS 14
6.1 Site Preparation and Grading 14
6.2 Groundwater Control 14
6.3 Construction Monitoring 15
7.0 GENERAL 16
8.0 LIMITATIONS 16

APPENDICIES

Appendix A

Plate A-1	Vicinity Map
Plate A-2	Boring Location Plan
Plates A-3 and A-4	Boring Logs
Plate A-5	Key to Symbols
Plate A-6	Classification of Soils for Engineering Purposes
Plate A-7	Terms Used on Boring Logs
Plate A-8	ASTM & TXDOT Designation for Soil Laboratory Tests
Plates A-9 to A-11	Consolidation Test Results
Plate A-12	Estimated Time Rate of Consolidation Settlement
Plate A-13	Summary of Lab Test Data

Appendix B

Plate B-1	Recommended Geotechnical Design Parameters
Plate B-2	Load Coefficients for Pipe Loading
Plate B-3	Live Loads on Pipe Crossing Under Roadway

Appendix C

Plate C-1	Critical Heights of Cut Slopes in Nonfissured Clays
Plate C-2	Maximum Allowable Slopes
Plate C-3	A Combination of Bracing and Open Cuts

AVILES ENGINEERING CORP.

APPENDICIES (cont.)

Appendix C (cont.)

Plate C-4	Lateral Pressure Diagrams for Open Cuts in Cohesive Soil-Long Term Conditions
Plate C-5	Lateral Pressure Diagrams for Open Cuts in Cohesive Soil-Short Term Conditions
Plate C-6	Lateral Pressure Diagrams for Open Cuts in Sand
Plate C-7	Bottom Stability for Braced Excavation in Clay
Plate C-8	Thrust Force Calculation
Plate C-9	Thrust Force Example Calculation
Plate C-10	Design Parameters for Bearing Thrust Block

AVILES ENGINEERING CORP.

EXECUTIVE SUMMARY

This report presents the results of a geotechnical investigation performed by Aviles Engineering Corporation (AEC) for a proposed 220,000 gallon groundwater storage tank (GST) at the Forest Cove No. 2 Water Plant, located at 1110 Mustang Trail in Houston, Texas (Houston/Harris County Key Map No.: 336E and F). Based on information provided by IDS Engineering Group (IDS), a new 40 foot diameter by 24 foot high bolted steel GST (GST No. 3) will be constructed at the site. A ring wall foundation will be used to support the new GST. In addition, a 6 inch diameter waterline will connect the new GST to an existing water well (WW No. 2) and a 10 inch diameter line will connect the new GST to an existing suction and interconnect line. The invert depth of the underground utilities was not available at the time this report was prepared, but is anticipated to be less than 5 feet. The utilities will be installed by open cut method. Two existing 30 foot diameter by 24 foot high GSTs (GST No. 1 and 2) at the site will also be demolished; the footprint of the new GST partially overlaps GST No. 1.

1. Subsurface Soil Conditions: Based on Boring B-2, the subsurface conditions within the GST footprint generally consist of approximately 16 feet of loose to medium dense clayey sand (SC) at the ground surface, underlain by approximately 12 feet of very stiff to hard lean clay (CL), followed by approximately 2 feet of silty sand (SM), then approximately 20 feet of very stiff to hard lean/fat clay (CL/CH) to the boring termination depth of 50 feet.

2. Subsurface Soil Properties: The cohesive soils (not including clayey sands) encountered in our borings have Liquid Limits (LL) ranging from 32 to 65 and Plasticity Indices (PI) ranging from 13 to 41. This indicates that the cohesive soils have medium to very high expansive potential. The cohesive soils encountered are classified as “CL” and “CH” type soils and the granular soils are classified as “SC” and “SM” type soils in accordance with ASTM D 2487.

3. Groundwater Conditions: Groundwater in the borings was encountered at a depth of 14 to 29 feet during drilling and subsequently rose to a depth of 4.5 to 7 feet approximately 24 hours after the initial encounter. This indicates that the groundwater at the site could be pressurized.

4. Design parameters and recommendations for design and construction of the tank foundation and tank pad subgrade preparation are presented in Section 5.2 of this report.

5. Design parameters and recommendations for installation of underground utilities by open cut method are presented in Section 5.3 of this report.

This Executive Summary is intended as a summary of the investigation and should not be used without the full text of this report.

AVILES ENGINEERING CORP.

GEOTECHNICAL INVESTIGATION

GROUND STORAGE TANK NO. 3 AT
FOREST COVE NO. 2 WATER PLANT
1110 MUSTANG TRAIL
WBS NO. S-000600-0046-4
HOUSTON, TEXAS

1.0 INTRODUCTION

1.1 Project Description

This report presents the results of a geotechnical investigation performed by Aviles Engineering Corporation (AEC) for a proposed 220,000 gallon groundwater storage tank (GST) at the Forest Cove No. 2 Water Plant, located at 1110 Mustang Trail in Houston, Texas (Houston/Harris County Key Map No.: 336E and F). A vicinity map is presented on Plate A-1 in Appendix A. Based on information provided by IDS Engineering Group (IDS), a new 40 foot diameter by 24 foot high bolted steel GST (GST No. 3) will be constructed at the site. A ring wall foundation will be used to support the new GST. In addition, a 6 inch diameter waterline will connect the new GST to an existing water well (WW No. 2) and a 10 inch diameter line will connect the new GST to an existing suction and interconnect line. The invert depth of the underground utilities was not available at the time this report was prepared, but is anticipated to be less than 5 feet. The utilities will be installed by open cut method. Two existing 30 foot diameter by 24 foot high GSTs (GST No. 1 and 2) at the site will also be demolished; the footprint of the new GST No. 3 partially overlaps GST No. 1.

1.2 Purpose and Scope

The purpose of this geotechnical investigation is to evaluate the subsurface soil and ground water conditions at the project site and to develop geotechnical engineering recommendations for design and construction of the proposed GST and underground utilities. The scope of this geotechnical investigation is summarized below:

1. Drilling and sampling two soil borings to depths ranging from 50 to 60 feet below existing grade;
2. Performing soil laboratory testing on selected soil samples;
3. Engineering analysis and recommendations for the GST foundation, allowable bearing capacity, tank settlement, and subgrade preparation;
4. Engineering analysis and recommendations for installation of underground utilities by open cut method, including loading on pipes, excavation and shoring, bedding, and backfill;
5. Construction recommendations for the GST foundation and underground utilities.

2.0 SUBSURFACE EXPLORATION

Subsurface conditions were investigated by drilling two soil borings ranging from 50 to 60 feet deep at the site. The borings were drilled within the proposed footprint of GST No. 3 based on the preliminary site plan (dated March 2014) provided to AEC in November 2014. However, based on an updated site plan (dated April 21, 2015), provided to AEC on June 12, 2015, the location of GST No. 3 has been moved so that only Boring B-2 remains within the proposed tank footprint. The boring locations are shown on the attached Boring Location Plan on Plate A-2, in Appendix A. Boring survey data is presented on the representative boring logs. A summary of the boring purposes and depths are summarized in Table 1 below.

Table 1. Summary of Borings

Boring	Purpose	Depth (ft)	Easting (Surface)	Northing (Surface)	Elevation (ft)
B-1	n/a*	60	3158184.81	13945600.06	82.94
B-2	GST, 6" Waterline, and 10" suction line	50	3158215.67	13945613.49	83.66

Note (*) Boring B-1 is no longer within tank footprint or adjacent to any proposed underground utilities.

The borings were drilled using a truck-mounted drill rig. Borings were performed initially by dry auger method, then using wet rotary method once the borings caved in or saturated granular soils were encountered. Undisturbed samples of cohesive soils were obtained from the borings by pushing 3-inch diameter thin-wall, seamless steel Shelby tube samplers in accordance with ASTM D 1587. Granular soils were sampled with a 2-inch split-barrel sampler in accordance with ASTM D 1586. Standard Penetration Test resistance (N) values were recorded for the granular soils as "Blows per Foot" and are shown on the boring logs. Strength of the cohesive soils was estimated in the field using a hand penetrometer. The undisturbed samples of cohesive soils were extruded mechanically from the core barrels in the field and wrapped in aluminum foil; all samples were sealed in plastic bags to reduce moisture loss and disturbance. The samples were then placed in core boxes and transported to the AEC laboratory for testing and further study. After completion of drilling, the borings were left open overnight so that next day groundwater readings could be obtained. Once the water readings were obtained, the borings were grouted with cement-bentonite. Details of the soils encountered in the borings are presented on Plates A-3 and A-4, in Appendix A.

3.0 LABORATORY TESTING

Soil laboratory testing was performed by AEC personnel. Samples from the borings were examined and classified in the laboratory by a technician under supervision of a geotechnical engineer. Laboratory tests were performed on selected soil samples in order to evaluate the engineering properties of the foundation soils in accordance with applicable ASTM Standards. Atterberg limits, moisture contents, percent passing a No. 200 sieve, and dry unit weight tests were performed on representative samples to establish the index properties and confirm field classification of the subsurface soils. Strength properties of cohesive soils were estimated by means of Torvane (TV) and Unconsolidated-Undrained (UU) triaxial tests performed on undisturbed samples. The test results are presented on their representative boring logs. A key to the boring logs, classification of soils for engineering purposes, terms used on boring logs, and reference ASTM Standards for laboratory testing are presented on Plates A-5 through A-8, in Appendix A. A summary of laboratory test data is presented on Plate A-13, in Appendix A.

Three one-dimensional consolidation tests were performed on selected soil samples in order to evaluate the general compressibility characteristics of the clay soils at the proposed GST. The results of the consolidation tests are presented on Plates A-9 through A-11, in Appendix A. The initial void ratio, compression index, recompression index, preconsolidation pressure, and estimated overconsolidation ratio (OCR) for the consolidation tests are summarized in Table 2.

Table 2. Summary of Consolidation Test Results

Sample ID and Description	e_0	C_c	C_r	p_c (tsf)	OCR
B-1, 6'-8', Clayey Sand (SC)	0.5853	0.1100	0.0119	1.3	3.0
B-1, 18'-20', Lean Clay (CL)	0.6935	0.2296	0.0294	7.7	9.9
B-2, 38'-40', Fat Clay (CH)	0.8372	0.2790	0.0258	7.7	5.8

Note: (1) e_0 = initial void ratio;
(2) C_c = compression ratio;
(3) C_r = recompression ratio, which is derived from the recompression curve within the stress range from 2 to 4 tsf;
(4) p_c = preconsolidation pressure; and
(5) OCR = overconsolidation ratio.

4.0 SITE CONDITIONS

Based on our site visit, the water plant currently has two GST's and an elevated storage tank (EST). The site is basically flat, with trees around the water plant perimeter.

AVILES ENGINEERING CORP.

4.1 Subsurface Conditions

Soil strata encountered in our borings are summarized below:

Boring	Depth	Description of Stratum
B-1	0' - 6'	Stiff to very stiff, Sandy Fat Clay (CH)
	6' - 14'	Medium dense, Clayey Sand (SC), with silty sand seams and partings
	14' - 18'	Very stiff to hard, Fat Clay (CH), with slickensides
	18' - 27'	Stiff to hard, Lean Clay (CL)
	27' - 42'	Hard, Fat Clay (CH), with slickensides
	42' - 52'	Stiff to hard, Lean Clay (CL), with slickensides
	52' - 60'	Stiff to hard, Fat Clay (CH), with slickensides
B-2	0' - 16'	Loose to medium dense, Clayey Sand (SC)
	16' - 28'	Very stiff to hard, Lean Clay (CL)
	28' - 30'	Silty Sand (SM), with fat clay pockets
	30' - 42'	Very stiff to hard, Fat Clay (CH), with slickensides
	42' - 50'	Very stiff to hard, Lean Clay (CL), with slickensides

Details of the soils encountered during drilling are presented on the boring logs. The cohesive soils (not including clayey sands) encountered in our borings have Liquid Limits (LL) ranging from 32 to 65 and Plasticity Indices (PI) ranging from 13 to 41. This indicates that the cohesive soils have medium to very high expansive potential. The cohesive soils encountered are classified as "CL" and "CH" type soils and the granular soils are classified as "SC" and "SM" type soils in accordance with ASTM D 2487. "CH" soils can undergo significant volume changes due to seasonal changes in moisture contents. "CL" soils with lower LL (less than 40) and PI (less than 20) generally do not undergo significant volume changes with changes in moisture content. However, "CL" soils with LL approaching 50 and PI greater than 20 essentially behave as "CH" soils and could undergo significant volume changes. Slickensides were encountered in fat clay soil.

Groundwater in the borings was encountered at a depth of 14 to 29 feet during drilling and subsequently rose to a depth of 4.5 to 7 feet approximately 24 hours after the initial encounter. This indicates that the groundwater at the site could be pressurized. A summary of groundwater levels encountered in the borings is presented on Table 3. The information in this report summarizes conditions found on the date the borings were drilled. However, it should be noted that our ground water observations are short term; ground water depths and subsurface soil moisture contents will vary with environmental variations such as frequency and magnitude of rainfall and the time of year when construction is in progress.

Table 3. Groundwater Depths below Existing Ground Surface

Boring No.	Date Drilled	Boring Depth (ft)	Water Level (ft)	Cave-in Depth (ft)
B-1	12/17/14	60	29 (Drilling) 27.5 (15 min.) 7.0 (1 day)	28 (Drilling) 53 (1 day)
B-2	12/17/14	50	14 (Drilling) 10.0 (10 min.) 4.5 (1 day)	10.5 (Drilling) 45 (1 day)

4.2 Subsurface Variations

It should be emphasized that: (i) at any given time, ground water depths can vary from location to location, and (ii) at any given location, ground water depths can change with time. Ground water depths will vary with seasonal rainfall and other climatic/environmental events. Subsurface conditions may vary in between and away from borings.

Clay soils in the Houston area typically have secondary features such as slickensides and contain sand/silt seams/lenses/layers/pockets. It should be noted that the information in the boring logs is based on 3-inch diameter soil samples which were generally obtained at intervals of 2 feet in the top 20 feet of the borings and at intervals of 5 feet thereafter to the boring termination depths. A detailed description of the soil secondary features may not have been obtained due to the small sample size and sampling interval between the samples. Therefore, while some of AEC's logs show the soil secondary features, it should not be assumed that the features are absent where not indicated on the logs.

5.0 ENGINEERING ANALYSIS AND RECOMMENDATIONS

Based on information provided by IDS, a new 40 foot diameter by 24 foot high bolted steel GST (GST No. 3) will be constructed at the site. A ring wall foundation will be used to support the new GST. In addition, a 6 inch diameter waterline will connect the new GST to an existing water well (WW No. 2) and a 10 inch diameter line will connect the new GST to an existing suction and interconnect line. The invert depth of the underground utilities was not available at the time this report was prepared, but is anticipated to be less than 5 feet. The utilities will be installed by open cut method. Two existing 30 foot diameter by 24 foot high GSTs (GST No. 1 and 2) at the site will also be demolished; the footprint of the new GST partially overlaps GST No. 1.

As noted in Section 2.0 of this report, Boring B-1 is currently outside the footprint of GST No. 3. The recommendations presented in this section of the report are predominately based on the soil conditions encountered in Boring B-2.

5.1 Demolition of Existing Tank Foundation

Since the footprint of GST No. 3 will partially overlap the footprint of the GST No. 1, AEC recommends that foundation of GST No. 1 be properly removed and backfilled prior to the construction of GST No. 3. After demolition of the existing GST No. 1 foundations, the footing excavation should be backfilled with compacted select fill in accordance with Section 5.4 of this report. Loose soil or concrete still present within the foundation excavation shall be removed prior to backfilling. AEC recommends that an Owner's Representative be on site during demolition to ensure that the existing foundation is properly removed and backfilled.

5.2 220,000 Gallon Ground Storage Tank

Based on the provided drawings, the finished floor of the GST will be at an elevation of 85.0 feet above Mean Sea Level (MSL). According to the provided survey data, Boring B-2 (located within the footprint of the proposed GST) is at a surface elevation of 83.66 feet above MSL.

Based on Boring B-2, AEC recommends that GST No. 3 be supported on a ring wall foundation, founded at a minimum depth of 3 feet below existing grade.

5.2.1 Tank Ring Wall Foundation

A ring wall foundation at a depth of 3 feet below existing grade (i.e. at approximately elevation 80.6 feet above MSL) should be designed for an allowable net bearing capacity of 2,400 pounds per square foot (psf) for sustained loads and 3,600 psf for total loads. A minimum factor of safety (FS) of 3 and 2 was applied for sustained loads and total loads, respectively; whichever bearing capacity is critical should be used for design.

Since the foundation will be subjected to hoop stresses, adequate reinforcement will be required to resist these forces. For the calculation of the lateral pressure on the ring wall foundation, we recommend that at-rest earth pressure be considered. The coefficient of earth pressure at-rest, $K_0 = 0.95$, can be used in the design. At-rest pressure, p_h (psf), at a depth of z feet below finished grade inside the ring wall can be calculated as:

$$P_h = (p_0 + \gamma z)*K_0 \qquad \text{.....Equation (1)}$$

where, p_0 = tank pressure at the finished grade elevation, psf;
γ = wet unit weight of soil, 125 pcf;
z = depth below finished grade, ft; and
K_0 = coefficient of earth pressure at-rest, 0.95

Foundation Settlements: AEC calculated settlements based on Boring B-2, soil laboratory testing results, and anticipated tank load. Considering a 24 foot high water head over a 40 foot diameter tank base, AEC estimated a tank load pressure of approximately 1,500 psf. Based on the estimated tank pressure, AEC estimated total settlement (which includes both immediate and long-term settlements, respectively) at the center and edge of the tank. A summary of the tank settlements is presented on Table 4.

Table 4. Estimated Settlement of GST #3 (Based on Boring B-2)

Tank	Tank Height (ft)	δ_v (in)	S_{c1} (in)	S_{c2} (in)	Total S (in)
Center	24	0.64	0.00	1.90	2.54
Edge		0.64	0.00	1.18	1.82

Note: (1) δ_v = immediate settlement, S_{c1} = Estimated settlement resulting from granular soils; S_{c2} = Estimated consolidation settlement resulting from clayey soils; Total settlement, $S = \delta_v + S_{c1} + S_{c2}$.

AEC estimates that the settlement at the tank center due to the new tank load is approximately 2.5 inches (as shown in Table 4). However, since the footprint of GST No. 3 is partially located over the footprint of GST No. 1, AEC anticipates that the southern portion of GST No. 3 will be subject to less settlement than the rest of the tank, since the southern portion of GST No. 3 will be supported on soils that have previously experienced loading from GST No. 1. The amount of differential settlement between the northern/central and southern portions of GST No. 3 will be difficult to predict, since the borings that AEC has performed at the site were located in areas that were not previously subjected to existing tank loads.

Time Rate of Consolidation Settlement: Time rate of foundation settlements is plotted as a curve of percent total consolidation settlement versus time for the GST on Plate A-12, in Appendix A. The curve is based on the assumption of a one-month linear construction period, i.e. the foundation soils will be loaded linearly during construction.

Frequently, the predicted settlement time is longer than that observed in the field for the following reasons: (1) theoretical conditions assumed for the consolidation analysis do not hold in-situ because of intermediate lateral drainage, anisotropy in permeability, time dependency of real loading, and the variation of soil properties with

effective stress; and (2) the coefficient of consolidation, as determined in the laboratory, decreases with sample disturbance; therefore, predicted settlement time tends to be greater than actual settlement time.

5.2.2 Tank Pad Preparation

Subgrade Preparation: Subgrade preparation should extend a minimum of 5 feet beyond the tank perimeter. A minimum of 6 inches of surface soils, existing vegetation, trees, roots, and other deleterious materials shall be removed and wasted in accordance with Section 02233 of the latest edition of the City of Houston Standard Construction Specifications (COHSCS). The excavation depth should be increased when inspection indicates the presence of weak, organics, and deleterious materials to greater depths.

After surface stripping, an additional 1.5 feet [total depth of 2 feet, (i.e. to an elevation of 81.7 feet above MSL), which includes the 6 inches of surface removal] of existing soils should be removed. The exposed subgrade should be proof-rolled in accordance with Item 216 of the 2014 TxDOT Standard Specifications for Construction and Maintenance of Highways, Streets, and Bridges to identify and remove any weak, compressible, or other unsuitable materials; such materials should be replaced with compacted select fill. Select fill should be in accordance with Section 5.4 of this report.

After proof rolling, compacted select fill should then be used to achieve the finished floor elevation of the tank at 85.0 feet above MSL. Select fill should be in accordance with Section 5.4 of this report. We recommend that the final subgrade surface be crowned about 3 to 4 inches higher at the tank center than the edge, since the settlement at the tank center is typically higher than the tank edge. Considering the potential of differential settlements, we recommend the use of flexible connections between pipelines and the tank. We suggest that the tank foundation structural design consider the potential differential settlements and use stiffened panels if appropriate.

5.3 Installation of Underground Utilities by Open-Cut Method

Underground utilities installed by open-cut methods should be designed and installed in accordance with Section 02511 of the latest edition of the COHSCS.

5.3.1 Geotechnical Parameters for Underground Utilities

Recommended geotechnical parameters for the subsurface soils at the site to be used for design of underground utilities are presented on Plate B-1, in Appendix B. The design values are based on the results of field and

laboratory test data on individual boring logs as well as our experience. It should be noted that because of the variable nature of soil stratigraphy, soil types and properties at locations away from a particular boring may vary substantially.

5.3.2 Loadings on Pipes

Underground utilities support the weight of the soil and water above the crown, as well as roadway traffic and any structures that exist above the utilities.

Earth Loads: For underground utilities to be installed using open cut methods, the vertical soil load W_e can be calculated as the larger of the two values from Equations (2) and (4):

$$W_e = C_d \gamma B_d^2 \qquad \text{.....Equation (2)}$$

$$C_d = [1 - e^{-2K\mu'(H/B_d)}]/(2K\mu') \qquad \text{.....Equation (3)}$$

$$W_e = \gamma B_c H \qquad \text{.....Equation (4)}$$

where:
- W_e = trench fill load, in pounds per linear foot (lb/ft);
- C_d = trench load coefficient, see Plate B-2, in Appendix C;
- γ = effective unit weight of soil over the conduit, in pounds per cubic foot (pcf);
- B_d = trench width at top of the conduit < 1.5 B_c (ft);
- B_c = outside diameter of the conduit (ft);
- H = variable height of fill (ft); when the height of fill above the top of the conduit $H_c > 2\ B_d$, $H = H_h$ (height of fill above the middle of the conduit). When $H_c < 2\ B_d$, H varies over the height of the conduit; and
- $K\mu'$ = 0.1650 maximum for sand and gravel, 0.1500 maximum for saturated top soil, 0.1300 maximum for ordinary clay, 0.1100 maximum for saturated clay.

When underground conduits are located below groundwater, the total vertical dead loads should include the weight of the projected volume of water above the conduits.

Traffic Loads: The vertical stress on top of an underground conduit, p_L (psf), resulting from traffic loads (from a HS-20 truck) can be obtained from Plate B-3, in Appendix C. The live load on top of the underground conduit can be calculated from Equation (5):

$$W_L = p_L B_c \qquad \text{.....Equation (5)}$$

where:
- W_L = live load on the top of the conduit (lb/ft);
- p_L = vertical stress (on the top of the conduit) resulting from traffic loads (psf);

B_c = outside diameter of the conduit, (ft);

Lateral Loads: The lateral soil pressure p_l can be calculated from Equation (6); hydrostatic pressure should be added, if applicable.

$$p_l = 0.5\,(\gamma H_h + p_s) \qquad \text{.....Equation (6)}$$

where: H_h = height of fill above the center of the conduit (ft);
γ = effective unit weight of soil over the conduit (pcf);
p_s = vertical pressure on conduit resulting from traffic and/or construction equipment (psf).

5.3.3 Trench Stability

Cohesive soils in the Houston area contain many secondary features which affect trench stability, including sand seams and slickensides. Slickensides are shiny weak failure planes which are commonly present in fat clays; such clays often fail along these weak planes when they are not laterally supported, such as in an open excavation. The Contractor should not assume that slickensides and sand seams/layers/pockets are absent where not indicated on the logs.

The Contractor should be responsible for designing, constructing and maintaining safe excavations. The excavations should not cause any distress to existing structures.

Trenches 20 feet and Deeper: The Occupational Safety and Health Administration (OSHA) requires that shoring or bracing for trenches 20 feet and deeper be specifically designed by a licensed professional engineer.

Trenches Less than 20 Feet Deep: Trench excavations that are less than 20 feet deep may be shored, sheeted and braced, or laid back to a stable slope for the safety of workers, the general public, and adjacent structures, except for excavations which are less than 5 feet deep and verified by a competent person to have no cave-in potential. The excavation and trenching should be in accordance with OSHA Safety and Health Regulations, 29 CFR, Part 1926. Recommended OSHA soil types for trench design for existing soils can be found on Plate B-1, in Appendix B. Fill soils are considered OSHA Class 'C'; submerged cohesive soils should also be considered OSHA Class 'C', unless they are dewatered first.

Critical Height is defined as the height a slope will stand unsupported for a short time; in cohesive soils, it is used to estimate the maximum depth of open-cuts at given side slopes. Critical Height may be calculated based on the soil cohesion. Values for various slopes and cohesion are shown on Plate C-1, in Appendix C. Cautions listed below should be exercised in use of Critical Height applications:

1. No more than 50 percent of the Critical Height computed should be used for vertical slopes. Unsupported vertical slopes are not recommended where granular soils or soils that will slough when not laterally supported are encountered within the excavation depth.

2. If the soil at the surface is dry to the point where tension cracks occur, any water in the crack will increase the lateral pressure considerably. In addition, if tension cracks occur, no cohesion should be assumed for the soils within the depth of the crack. The depth of the first waler should not exceed the depth of the potential tension crack. Struts should be installed before lateral displacement occurs.

3. Shoring should be provided for excavations where limited space precludes adequate side slopes, e.g., where granular soils will not stand on stable slopes and/or for deep open cuts.

4. All excavation, trenching and shoring should be designed and constructed by qualified professionals in accordance with OSHA requirements.

The maximum (steepest) allowable slopes for OSHA Soil Types for excavations less than 20 feet are presented on Plate C-2, in Appendix C.

If limited space is available for the required open trench side slopes, the space required for the slope can be reduced by using a combination of bracing and open cut as illustrated on Plate C-3, in Appendix C. Guidelines for bracing and calculating bracing stress are presented below.

<u>Computation of Bracing Pressures:</u> The following method can be used for calculating earth pressure against bracing for open cuts. Lateral pressure resulting from construction equipment, traffic loads, or other surcharge should be taken into account by adding the equivalent uniformly distributed surcharge to the design lateral pressure. Hydrostatic pressure, if any, should also be considered. The active earth pressure at depth z can be determined by Equation (7). The design soil parameters for trench bracing design are presented on Plate B-1, in Appendix B.

$$p_a = (q_s + \gamma h_1 + \gamma' h_2) K_a - 2c\sqrt{K_a} + \gamma_w h_2 \qquad \text{.....Equation (7)}$$

where:
- p_a = active earth pressure (psf);
- q_s = uniform surcharge pressure (psf);
- γ, γ' = wet unit weight and buoyant unit weight of soil (pcf);
- h_1 = depth from ground surface to groundwater table (ft);
- h_2 = $z-h_1$, depth from groundwater table to the point under consideration (ft);
- z = depth below ground surface for the point under consideration (ft);
- K_a = coefficient of active earth pressure;
- c = cohesion of clayey soils (psf); c can be omitted conservatively;
- γ_w = unit weight of water, 62.4 pcf.

Pressure distribution for the practical design of struts in open cuts for clays and sands are illustrated on Plates C-4 through C-6, in Appendix C.

Bottom Stability: In open-cuts, it is necessary to consider the possibility of the bottom failing by heaving, due to the removal of the weight of excavated soil. Heaving typically occurs in soft plastic clays when the excavation depth is sufficiently deep enough to cause the surrounding soil to displace vertically due to bearing capacity failure of the soil beneath the excavation bottom, with a corresponding upward movement of the soils in the bottom of the excavation. In fat and lean clays, heave normally does not occur unless the ratio of Critical Height to Depth of Cut approaches one. In very sandy and silty lean clays and granular soils, heave can occur if an artificially large head of water is created due to installation of impervious sheeting while bracing the cut. This can be mitigated if groundwater is lowered below the excavation by dewatering the area. Guidelines for evaluating bottom stability in clay soils are presented on Plate C-7, in Appendix C.

Based on an invert depth of approximately 4 feet below grade, AEC anticipates that open cut excavation will encounter granular soils (in the vicinity of Boring B-2) or groundwater within the trench or pipe bedding zone. If the excavation extends below groundwater and the soils at or near the bottom of the excavation are mainly sands or silts, the bottom can fail by blow-out (boiling) when a sufficient hydraulic head exists. The potential for boiling or in-flow of granular soils increases where the groundwater is pressurized. To reduce the potential for boiling of excavations terminating in granular soils below pressurized groundwater, the groundwater table should be lowered at least 5 feet below the excavation in accordance with Section 01578 of the latest edition of the City of Houston Standard General Requirement (COHSGR).

Calcareous nodules, silt/sand seams, and fat clays with slickensides were encountered in some of the borings. These secondary structures may become sources of localized instability when they are exposed during excavation, especially when they become saturated. Such soils have a tendency to slough or cave in when not laterally confined, such as in trench excavations. The Contractor should be aware of the potential for cave-in of the soils. Low plasticity soils (silts and clayey silts) will lose strength and may behave like granular soils when saturated.

5.3.4 Thrust Force Design Recommendations

Thrust forces are generated in pressure pipes, typically as a result of changes in pipe diameter, pipe direction or at the termination point of the pipes. The pipes could disengage at the joints if the forces are not balanced and if

the pipe restraint is not adequate. Various methods of thrust restraint are used including thrust blocks, restrained joints, encasement, and tie-rods.

Thrust restraint design procedure based on the 2008 American Water Works Association (AWWA) Manuals "Pressurized Concrete Pipe (M9)" and "Steel Water Pipe (M11)" is discussed below. Plate C-8, in Appendix C shows the force diagram generated by flow in a bend in a pipe and also gives the equation for computing the thrust force. An example computation of a thrust force for a given surge pressure and a bend angle is presented on Plate C-9, in Appendix C.

Frictional Resistance: The unbalanced force due to changes in grade and alignment can be resisted by frictional force F_R, between the pipe and the surrounding soil. The resisting frictional force per linear foot of pipe against soil can be calculated from Equation (8):

$$F_R = f\,(2W_e + W_w + W_p) \qquad \text{.....Equation (8)}$$

where:
- f = Coefficient of friction between pipe and soil;
- W_e = Weight of soil over pipe (lb/ft);
- W_w = Weight of water inside the pipe (lb/ft);
- W_p = Weight of pipe (lb/ft).

The value of the frictional resistance depends on the material in contact with the backfill and the soil used in the backfill. For a ductile iron pipe or steel pipe with crushed stone or compacted sand backfill, an allowable coefficient of friction of 0.3 can be used. To account for submerged conditions, a soil unit weight of 60 pcf should be used to compute the weight of compacted backfill on the pipe.

Thrust Blocks: Thrust blocks utilize passive earth pressures to resist forces generated by changes in direction or diameter of pressurized pipes. Passive earth pressure can be calculated using Equation (9); we recommend that a factor safety of 2.0 be used when using passive earth pressure for design of thrust blocks. The design soil parameters for thrust block design are presented on Plate B-1, in Appendix B. Design parameters for bearing thrust blocks are presented on Plate C-10, in Appendix C.

$$p_p = \gamma z K_p + 2c(K_p)^{1/2} \qquad \text{.....Equation (9)}$$

where,
- p_p = passive earth pressure (psf);
- γ = wet unit weight of soil (pcf);
- z = depth below ground surface for the point under consideration (ft);

K_p = coefficient of passive earth pressure;
c = cohesion of clayey soils (psf).

5.3.5 Bedding and Backfill

Trench excavation, pipe embedment material, and backfill for the proposed waterlines should be in general accordance with Section 02317 of the latest edition of the COHSCS.

5.4 Select Fill

Select fill should be in accordance with Section 02320, Subsection 1.01.B.7 of the latest edition of the COHSCS.

6.0 CONSTRUCTION CONSIDERATIONS

6.1 Site Preparation and Grading

To mitigate site problems that may develop following prolonged periods of rainfall, it is essential to have adequate drainage to maintain a relatively dry and firm surface prior to starting any work at the site. Adequate drainage should be maintained throughout the construction period. Methods for controlling surface runoff and ponding include proper site grading, berm construction around exposed areas, and installation of sump pits with pumps.

6.2 Groundwater Control

The need for groundwater control will depend on the depth of excavation relative to the groundwater depth at the time of construction. In the event that there is heavy rain prior to or during construction, the groundwater table may be higher than indicated in this report; higher seepage is also likely and may require a more extensive groundwater control program. In addition, groundwater may be pressurized in certain areas of the site, requiring further evaluation and consideration of the excess hydrostatic pressures. Groundwater control should be in general accordance with Section 01578 of the latest edition of the COHSGR.

The Contractor should be responsible for selecting, designing, constructing, maintaining, and monitoring a groundwater control system and adapt his operations to ensure the stability of the excavations. Groundwater information presented in Section 4.1 and elsewhere in this report, along with consideration for potential environmental and site variation between the time of our field exploration and construction, should be

incorporated in evaluating groundwater depths. The following recommendations are intended to guide the Contractor during design and construction of the dewatering system.

In cohesive soils seepage rates are lower than in granular soils and groundwater is usually collected in sumps and channeled by gravity flow to storm sewers. If cohesive soils contain significant secondary features, seepage rates will be higher. This may require larger sumps and drainage channels, or if significant granular layers are interbedded within the cohesive soils, methods used for granular soils may be required. Where it is present, pressurized groundwater will also yield higher seepage rates.

Groundwater for excavations within saturated sands can be controlled by the installation of wellpoints. The practical maximum dewatering depth for well points is about 15 feet. When groundwater control is required below 15 feet, possible ground water control measures include: (i) deep wells with turbine or submersible pumps; (ii) multi-staged well points; or (iii) water-tight sheet pile cut-off walls. Generally, the groundwater depth should be lowered at least 5 feet below the excavation bottom (in accordance with Section 01578 of the latest edition of the COHSGR) to be able to work on a firm surface when water-bearing granular soils are encountered.

Extended and/or excessive dewatering can result in settlement of existing structures in the vicinity; the Contractor should take the necessary precautions to minimize the effect on existing structures in the vicinity of the dewatering operation. We recommend that the Contractor verify the groundwater depths and seepage rates prior to and during construction and retain the services of a dewatering expert (if necessary) to assist him in identifying, implementing, and monitoring the most suitable and cost-effective method of controlling groundwater.

For open cut construction in cohesive soils, the possibility of bottom heave must be considered due to the removal of the weight of excavated soil. In lean and fat clays, heave normally does not occur unless the ratio of Critical Height to Depth of Cut approaches one. In silty clays, heave does not typically occur unless an artificially large head of water is created through the use of impervious sheeting in bracing the cut. Guidelines for evaluating bottom stability are presented in Section 5.3.3 of this report.

6.3 Construction Monitoring

Site preparation (including clearing and proof-rolling), earthwork operations, foundation construction, and subgrade preparation should be monitored by qualified geotechnical professionals to check for compliance with project documents and changed conditions, if encountered.

7.0 GENERAL

AEC should be allowed to review construction documents and specifications prior to release to check that the geotechnical recommendations and design criteria presented herein are properly interpreted.

The information contained in this report summarizes conditions found on the date the borings were drilled. The attached boring logs are true representations of the soils encountered at the specific boring locations on the date of drilling. Due to variations encountered in the subsurface conditions across the site, changes in soil conditions from those presented in this report should be anticipated. AEC should be notified immediately when conditions encountered during construction are significantly different from those presented in this report.

8.0 LIMITATIONS

The investigation was performed using the standard level of care and diligence normally practiced by recognized geotechnical engineering firms in this area, presently performing similar services under similar circumstances. The report has been prepared exclusively for the project and location described in this report, and is intended to be used in its entirety. If pertinent project details change or otherwise differ from those described herein, AEC should be notified immediately and retained to evaluate the effect of the changes on the recommendations presented in this report, and revise the recommendations if necessary. The scope of services does not include a fault investigation. The recommendations presented in this report should not be used for other structures located at this site or similar structures located at other sites, without additional evaluation and/or investigation.

AVILES ENGINEERING CORP.

APPENDIX A

Plate A-1	Vicinity Map
Plate A-2	Boring Location Plan
Plates A-3 and A-4	Boring Logs
Plate A-5	Key to Symbols
Plate A-6	Classification of Soils for Engineering Purposes
Plate A-7	Terms Used on Boring Logs
Plate A-8	ASTM & TXDOT Designation for Soil Laboratory Tests
Plates A-9 to A-11	Consolidation Test Results
Plate A-12	Estimated Time Rate of Consolidation Settlement
Plate A-13	Summary of Lab Test Data

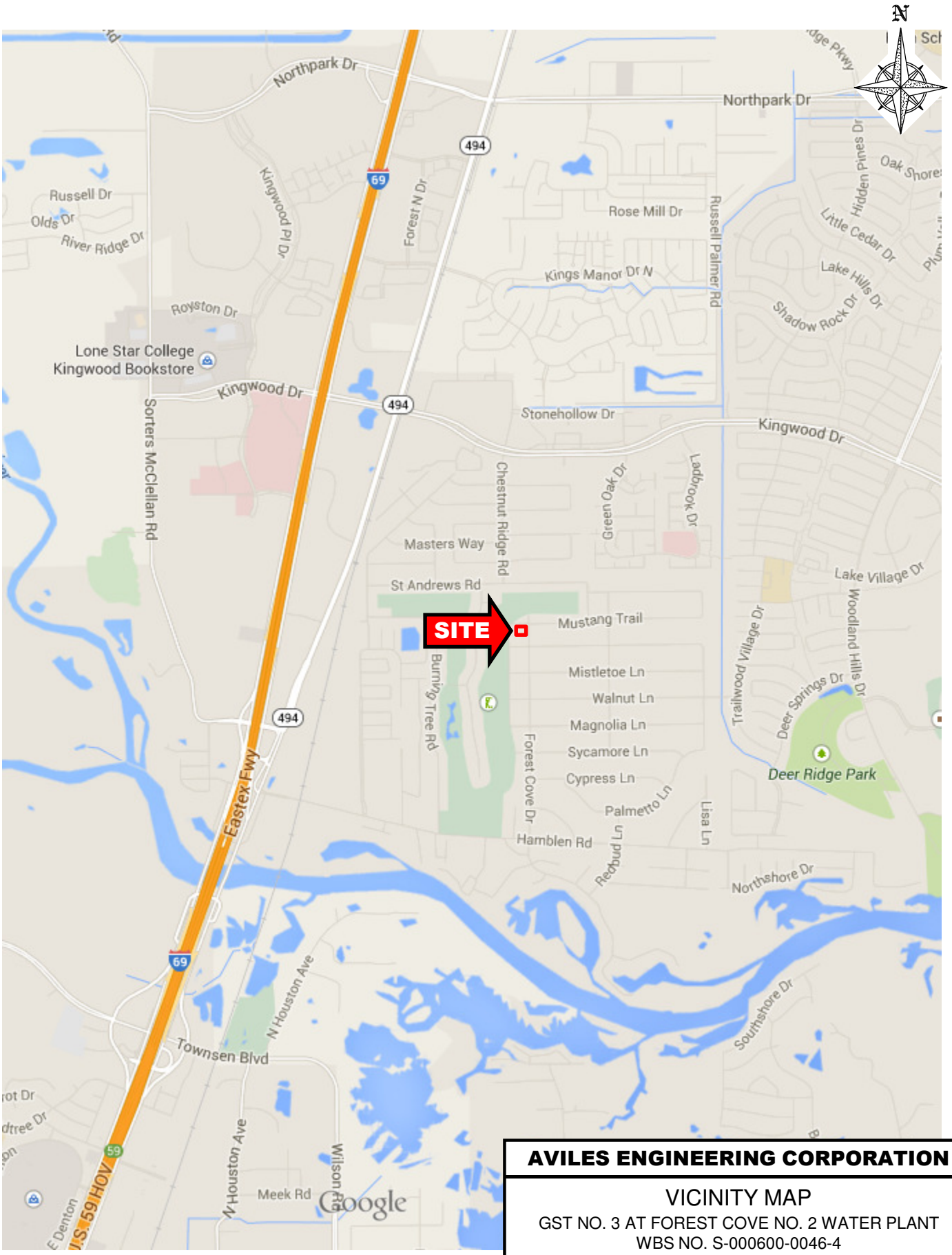

AVILES ENGINEERING CORPORATION

VICINITY MAP

GST NO. 3 AT FOREST COVE NO. 2 WATER PLANT
WBS NO. S-000600-0046-4
HOUSTON, TEXAS

AEC PROJECT NO.:	DATE:	DRAWING SOURCE:
G174-14	02-05-15	GOOGLE
APPROX. SCALE:	DRAFTED BY:	PLATE NO.:
N.T.S.	WIW	PLATE A-1

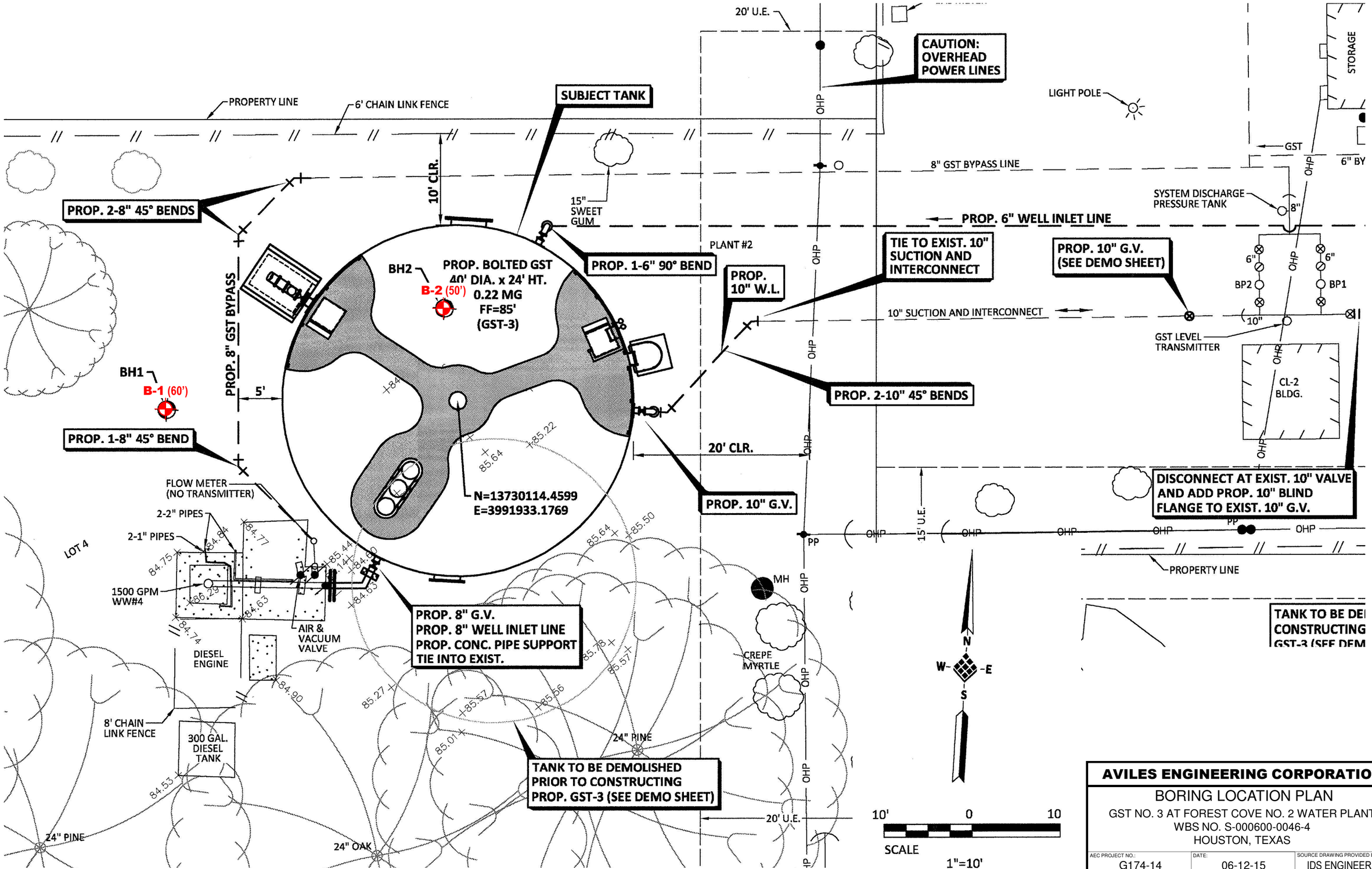

AVILES ENGINEERING CORPORATION

BORING LOCATION PLAN

GST NO. 3 AT FOREST COVE NO. 2 WATER PLANT
WBS NO. S-000600-0046-4
HOUSTON, TEXAS

AEC PROJECT NO.:	DATE:	SOURCE DRAWING PROVIDED BY:
G174-14	06-12-15	IDS ENGINEERING
APPROX. SCALE: 1"=10'	DRAFTED BY: WLW	PLATE NO.: PLATE A-2

AVILES ENGINEERING CORP.
GEOTECHNICAL ENGINEERS

PROJECT: **Water Storage Tank at Forest Cove No.2 WP** BORING **B-1**

COH WBS No. **S-000600-0046-4** TYPE **4" Dry Auger/Wet Rotary** DATE **12/17/14**

ELEVATION IN FEET	DEPTH IN FEET	SYMBOL	SAMPLE INTERVAL	DESCRIPTION	S.P.T. BLOWS / FT.	-200 MESH	DRY DENSITY, PCF	MOISTURE CONTENT, %	LIQUID LIMIT	PLASTIC LIMIT	PLASTICITY INDEX
				Survey Coordinates (TSPC, Surface): *Easting: 3158184.81* *Northing: 13945600.06* *Elevation: 82.94*							
	0			Stiff to very stiff, tan Sandy Fat Clay (CH) -with roots and silty sand layer 0'-2'				14			
80				-gray, red, and tan, with vertical sand seams 2'-4'		61		18	53	17	36
	5			-with sand seams and pockets 4'-6'			111	17			
				Medium dense, light gray and red Clayey Sand (SC), with silty sand seams and partings		46		18	36	15	21
75								17			
	10			-tan and red 10'-12'		18	109	17			
70				-tan and gray, with fat clay pockets 12'-14'	16	22		15			
	15			Very stiff to hard, light gray, red, and tan Fat Clay (CH), with slickensides			104	24	64	23	41
								20			
65				Stiff to hard, gray and red Lean Clay (CL)		94		23	48	17	31
	20										
60				-with silty clay pockets 23'-25'			109	21			
	25										
55				Hard, red, brown, and light gray Fat Clay (CH), with slickensides -boring cave in at 28' during drilling	26	96		27	54	22	32
	30										
50							105	23			
	35										

SHEAR STRENGTH, TSF

△ Confined Compression
● Unconfined Compression
○ Pocket Penetrometer
□ Torvane

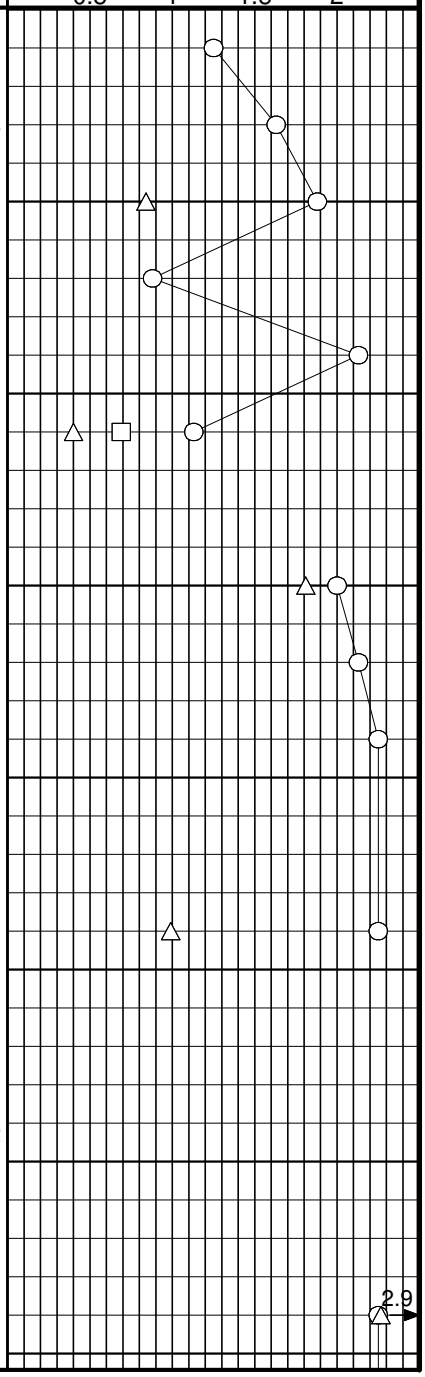

BORING DRILLED TO **30** FEET WITHOUT DRILLING FLUID
WATER ENCOUNTERED AT **29** FEET WHILE DRILLING
WATER LEVEL AT **7** FEET AFTER **24 HRS**
DRILLED BY **V&S** DRAFTED BY **CHL** LOGGED BY **BPJ**

AVILES ENGINEERING CORP. GEOTECHNICAL ENGINEERS

PROJECT: **Water Storage Tank at Forest Cove No.2 WP** BORING **B-1**

COH WBS No. **S-000600-0046-4** TYPE **4" Dry Auger/Wet Rotary** DATE **12/17/14**

ELEVATION IN FEET	DEPTH IN FEET	SYMBOL	SAMPLE INTERVAL	DESCRIPTION	S.P.T. BLOWS / FT.	-200 MESH	DRY DENSITY, PCF	MOISTURE CONTENT, %	LIQUID LIMIT	PLASTIC LIMIT	PLASTICITY INDEX
				Hard, Fat Clay (Cont...)							
45								28			
	40										
				Stiff to hard, red Lean Clay (CL), with slickensides							
40				-with calcareous nodules 43'-45'			107	22			
	45										
35				-with silt pockets 48'-50'		100		23	44	21	23
	50										
				Stiff to hard, red Fat Clay (CH), with slickensides							
30								29			
	55										
25				-gray and green 58'-60'			104	23			
	60			Termination depth = 60 feet.							
20											
	65										
15											
	70										

SHEAR STRENGTH, TSF

△ Confined Compression
● Unconfined Compression
○ Pocket Penetrometer
□ Torvane

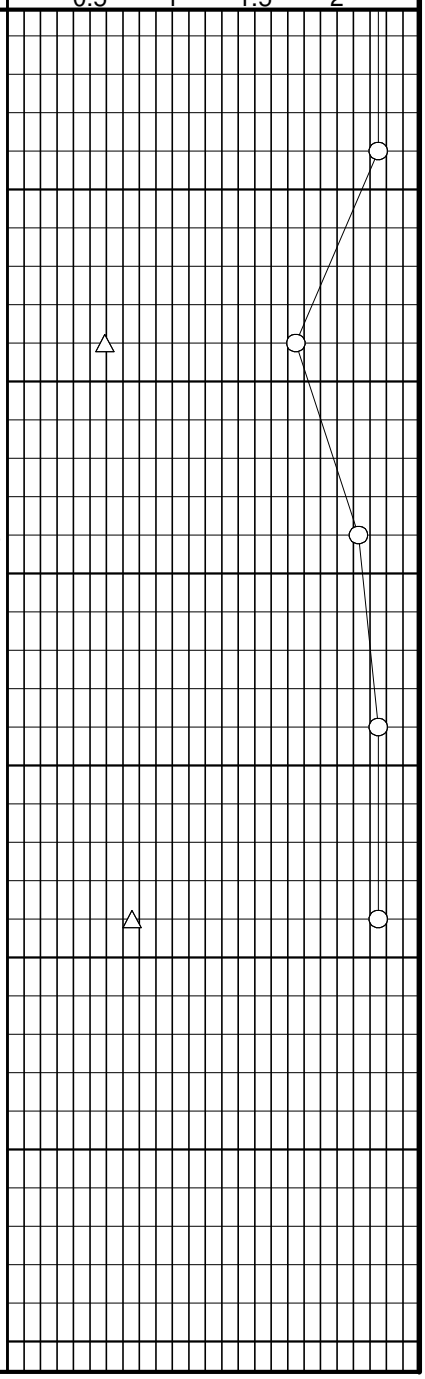

BORING DRILLED TO **30** FEET WITHOUT DRILLING FLUID

WATER ENCOUNTERED AT **29** FEET WHILE DRILLING

WATER LEVEL AT **7** FEET AFTER **24 HRS**

DRILLED BY **V&S** DRAFTED BY **CHL** LOGGED BY **BPJ**

AVILES ENGINEERING CORP.
GEOTECHNICAL ENGINEERS

PROJECT: **Water Storage Tank at Forest Cove No.2 WP** BORING **B-2**

COH WBS No. **S-000600-0046-4** TYPE **4" Dry Auger/Wet Rotary** DATE **12/17/14**

DESCRIPTION
Survey Coordinates (TSPC, Surface):
Easting: 3158215.67
Northing: 13945613.49
Elevation: 83.66

ELEVATION IN FEET	DEPTH IN FEET	DESCRIPTION	S.P.T. BLOWS / FT.	-200 MESH	DRY DENSITY, PCF	MOISTURE CONTENT, %	LIQUID LIMIT	PLASTIC LIMIT	PLASTICITY INDEX
	0	Loose to medium dense, brown Clayey Sand (SC)		45		9	27	15	12
		-with silt seams and roots 0'-2'							
		-gray and red 2'-10', with fat clay seams 2'-8', and ferrous nodules 2'-4'			112	17			
80									
	5					16			
						17			
		-with vertical sand seams 8'-10'							
75				29	114	17	35	18	17
	10								
				22		17			
		-tan and light gray, with silty sand pockets 12'-16'	15	27		22			
70									
	15		6			29			
		Very stiff to hard, light gray and red Lean Clay (CL)		91	111	19	43	17	26
65						19			
	20								
		-with silty clay pockets 23'-25'			109	19			
60									
	25								
55		Tan and gray Silty Sand (SM), with fat clay pockets		19		25			
	30	Very stiff to hard, light tan Fat Clay (CH), with slickensides							
		-with ferrous nodules 33'-35'			106	23			
50									
	35								

SHEAR STRENGTH, TSF

△ Confined Compression
● Unconfined Compression
○ Pocket Penetrometer
□ Torvane

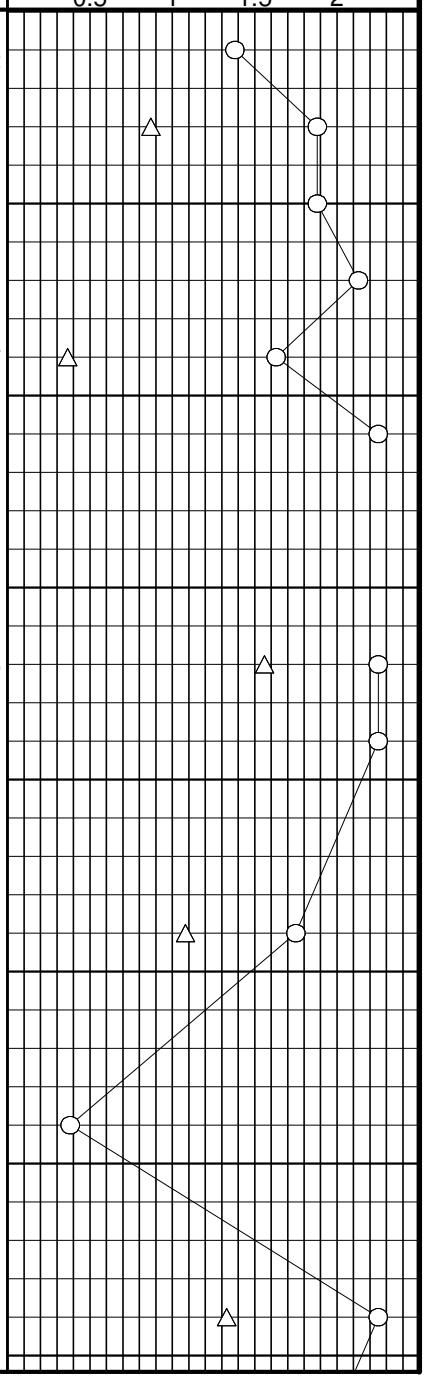

BORING DRILLED TO **14** FEET WITHOUT DRILLING FLUID
WATER ENCOUNTERED AT **14** FEET WHILE DRILLING
WATER LEVEL AT **4.5** FEET AFTER **24 HRS**
DRILLED BY **V&S** DRAFTED BY **CHL** LOGGED BY **BPJ**

AVILES ENGINEERING CORP.
GEOTECHNICAL ENGINEERS

PROJECT: **Water Storage Tank at Forest Cove No.2 WP** BORING **B-2**

COH WBS No. **S-000600-0046-4** TYPE **4" Dry Auger/Wet Rotary** DATE **12/17/14**

ELEVATION IN FEET	DEPTH IN FEET	SYMBOL	SAMPLE INTERVAL	DESCRIPTION	S.P.T. BLOWS / FT.	-200 MESH	DRY DENSITY, PCF	MOISTURE CONTENT, %	LIQUID LIMIT	PLASTIC LIMIT	PLASTICITY INDEX
				Very stiff to hard, Fat Clay (Cont...)							
45	40			-red and brown, with calcareous nodules 38' 40'		100		29	65	26	39
				Very stiff to hard, brown and gray Lean Clay (CL), with slickensides							
40	45			-with calcareous nodules 43'-45'				22			
35	50			-with silt pockets 48'-50'		98	106	22	32	19	13
				Termination depth = 50 feet.							
30	55										
25	60										
20	65										
15	70										

SHEAR STRENGTH, TSF

△ Confined Compression
● Unconfined Compression
○ Pocket Penetrometer
□ Torvane

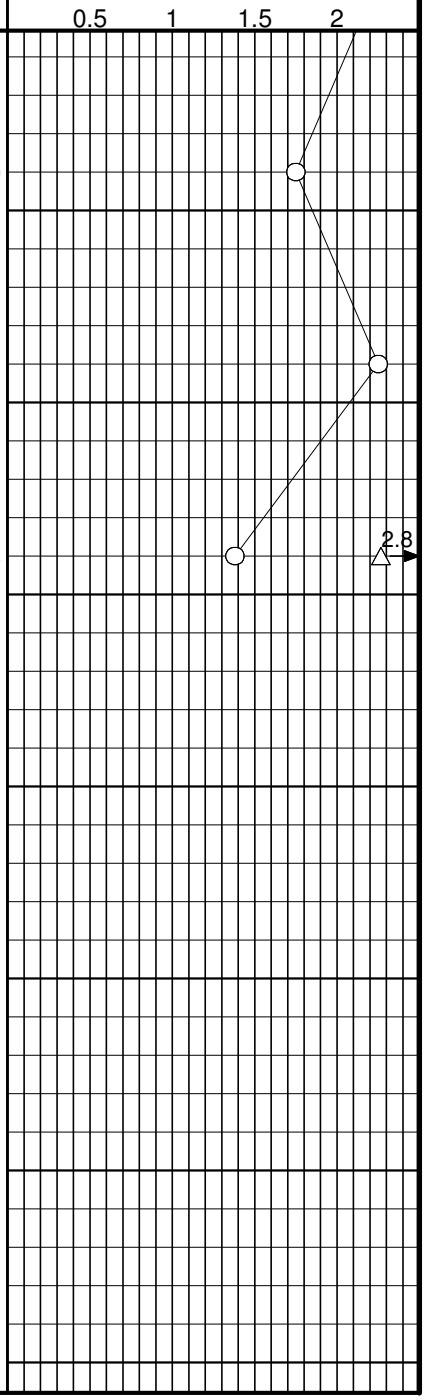

BORING DRILLED TO **14** FEET WITHOUT DRILLING FLUID
WATER ENCOUNTERED AT **14** FEET WHILE DRILLING
WATER LEVEL AT **4.5** FEET AFTER **24 HRS**
DRILLED BY **V&S** DRAFTED BY **CHL** LOGGED BY **BPJ**

KEY TO SYMBOLS

Symbol	Description
Strata symbols	
	High plasticity clay
	Clayey sand
	Low plasticity clay
	Silty sand
Misc. Symbols	
	Water table depth during drilling
	Subsequent water table depth
	Torvane
	Pocket Penetrometer
	Confined Compression
Soil Samplers	
	Undisturbed thin wall Shelby tube
	Standard penetration test

AYLES ENGINEERING CORP.

CLASSIFICATION OF SOILS FOR ENGINEERING PURPOSES

ASTM Designation D-2487

MAJOR DIVISIONS				GROUP SYMBOL	TYPICAL NAMES
COARSE-GRAINED SOILS (Less than 50% passes No. 200 sieve)	GRAVELS (Less than 50% of coarse fraction passes No. 4 sieve)	CLEAN GRAVELS (Less than 5% passes No. 200 sieve)		GW	Well-graded gravel, well-graded gravel with sand
				GP	Poorly-graded gravel, poorly-graded gravel with sand
		GRAVELS WITH FINES (More than 12% passes No. 200 sieve)	Limits plot below "A" line & hatched zone on plasticity chart	GM	Silty gravel, silty gravel with sand
			Limits plot above "A" line & hatched zone on plasticity chart	GC	Clayey gravel, clayey gravel with sand
	SANDS (50% or more of coarse fraction passes No. 4 sieve)	CLEAN SANDS (Less than 5% passes No. 200 sieve)		SW	Well-graded sand, well-graded sand with gravel
				SP	Poorly-graded sand, poorly-graded sand with gravel
		SANDS WITH FINES (More than 12% passes No. 200 sieve)	Limits plot below "A" line & hatched zone on plasticity chart	SM	Silty sand, silty sand with gravel
			Limits plot above "A" line & hatched zone on plasticity chart	SC	Clayey sand, clayey sand with gravel
FINE-GRAINED SOILS (50% or more passes No. 200 sieve)		SILTS AND CLAYS (Liquid Limit Less Than 50%)		ML	Silt, silt with sand, silt with gravel, sandy silt, gravelly silt
				CL	Lean clay, lean clay with sand, lean clay with gravel, sandy lean clay, gravelly lean clay
				OL	Organic clay, organic clay with sand, sandy organic clay, organic silt, sandy organic silt
		SILTS AND CLAYS (Liquid Limit 50% or More)		MH	Elastic silt, elastic silt with sand, sandy elastic silt, gravelly elastic silt
				CH	Fat clay, fat clay with sand, fat clay with gravel, sandy fat clay, gravelly fat clay
				OH	Organic clay, organic clay with sand, sandy organic clay, organic silt, sandy organic silt

NOTE: Coarse soils between 5% and 12% passing the No. 200 sieve and fine-grained soils with limits plotting in the hatched zone of the plasticity chart are to have dual symbols.

PLASTICITY CHART

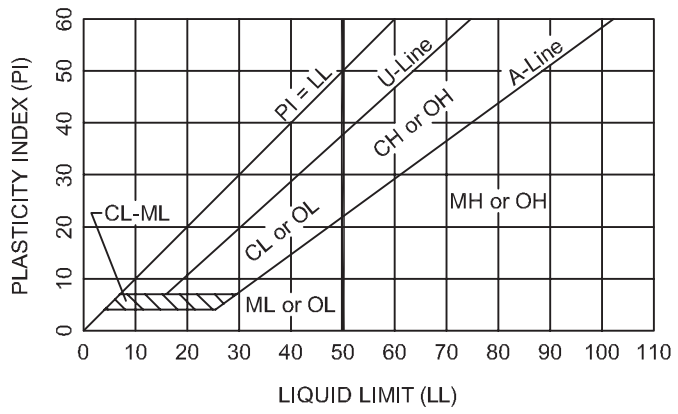

Equation of A-Line: Horizontal at PI=4 to LL=25.5, then PI=0.73(LL-20)

Equation of U-Line: Vertical at LL=16 to PI=7, then PI=0.9(LL-8)

DEGREE OF PLASTICITY OF COHESIVE SOILS

Degree of Plasticity	Plasticity Index
None	0 - 4
Slight	5 - 10
Medium	11 - 20
High	21 - 40
Very High	>40

SOIL SYMBOLS

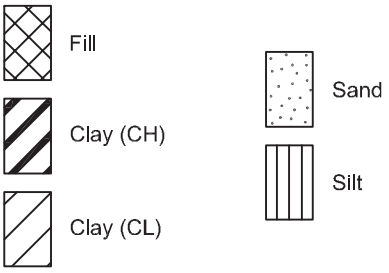

AYLES ENGINEERING CORP.

TERMS USED ON BORING LOGS

SOIL GRAIN SIZE

U.S. STANDARD SIEVE

6"	3"	3/4"	#4	#10	#40	#200		
BOULDERS	COBBLES	GRAVEL		SAND			SILT	CLAY
		COARSE	FINE	COARSE	MEDIUM	FINE		
152	76.2	19.1	4.76	2.00	0.420	0.074	0.002	

SOIL GRAIN SIZE IN MILLIMETERS

STRENGTH OF COHESIVE SOILS

Consistency	Undrained Shear Strength, Kips per Sq. ft.
Very Soft	less than 0.25
Soft	0.25 to 0.50
Firm	0.50 to 1.00
Stiff	1.00 to 2.00
Very Stiff	2.00 to 4.00
Hard	greater than 4.00

RELATIVE DENSITY OF COHESIONLESS SOILS FROM STANDARD PENETRATION TEST

Very Loose	<4 bpf
Loose	5-10 bpf
Medium Dense	11-30 bpf
Dense	31-50 bpf
Very Dense	>50 bpf

SPLIT-BARREL SAMPLER DRIVING RECORD

Blows per Foot	Description
25	25 blows driving sampler 12 inches, after initial 6 inches of seating.
50/7"	50 blows driving sampler 7 inches, after initial 6 inches of seating.
Ref/3"	50 blows driving sampler 3 inches, during initial 6-inches seating interval.

NOTE: To avoid change to sampling tools, driving is limited to 50 blows during or after seating interval.

DRY STRENGTH ASTM D2488

None	Dry specimen crumbles into powder with mere pressure of handling
Low	Dry specimen crumbles into powder with some finger pressure
Medium	Dry specimen breaks into pieces or crumbles with considerable pressure
High	Dry specimen cannot be broken with finger pressure, it can be broken between thumb and hard surface
Very High	Dry specimen cannot be broken between thumb and hard surface

MOISTURE CONDITION ASTM D2488

Dry	Absence of moisture, dusty, dry to the touch
Moist	Damp but no visible water
Wet	Visible free water

SOIL STRUCTURE

Slickensided	Having planes of weakness that appear slick and glossy. The degree of slickensidedness depends upon the spacing of slickensides and the easiness of breaking along these planes.
Fissured	Containing shrinkage or relief cracks, often filled with fine sand or silt; usually more or less vertical.
Pocket	Inclusion of material of different texture that is smaller than the diameter of the sample.
Parting	Inclusion less than 1/8 inch thick extending through the sample.
Seam	Inclusion 1/8 inch to 3 inches thick extending through the sample.
Layer	Inclusion greater than 3 inches thick extending through the sample.
Laminated	Soil sample composed of alternating partings or seams of different soil types.
Interlayered	Soil sample composed of alternating layers of different soil types.
Intermixed	Soil sample composed of pockets of different soil types and layered or laminated structure is not evident.
Calcareous	Having appreciable quantities of calcium material.

AVILES ENGINEERING CORP.

ASTM & TXDOT DESIGNATION FOR SOIL LABORATORY TESTS

NAME OF TEST	ASTM TEST DESIGNATION	TXDOT TEST DESIGNATION
Moisture Content	D 2216	Tex-103-E
Specific Gravity	D 854	Tex-108-E
Sieve Analysis	D 421 D 422	Tex-110-E (Part 1)
Hydrometer Analysis	D 422	Tex-110-E (Part 2)
Minus No. 200 Sieve	D 1140	Tex-111-E
Liquid Limit	D 4318	Tex-104-E
Plastic Limit	D 4318	Tex-105-E
Shrinkage Limit	D 427	Tex-107-E
Standard Proctor Compaction	D 698	Tex-114-E
Modified Proctor Compaction	D 1557	Tex-113-E
Permeability (constant head)	D 2434	-
Consolidation	D 2435	-
Direct Shear	D 3080	-
Unconfined Compression	D 2166	-
Unconsolidated-Undrained Triaxial	D 2850	Tex-118-E
Consolidated-Undrained Triaxial	D 4767	Tex-131-E
Pinhole Test	D 4647	-
California Bearing Ratio	D 1883	-
Unified Soil Classification System	D 2487	Tex-142-E

CONSOLIDATION TEST RESULTS

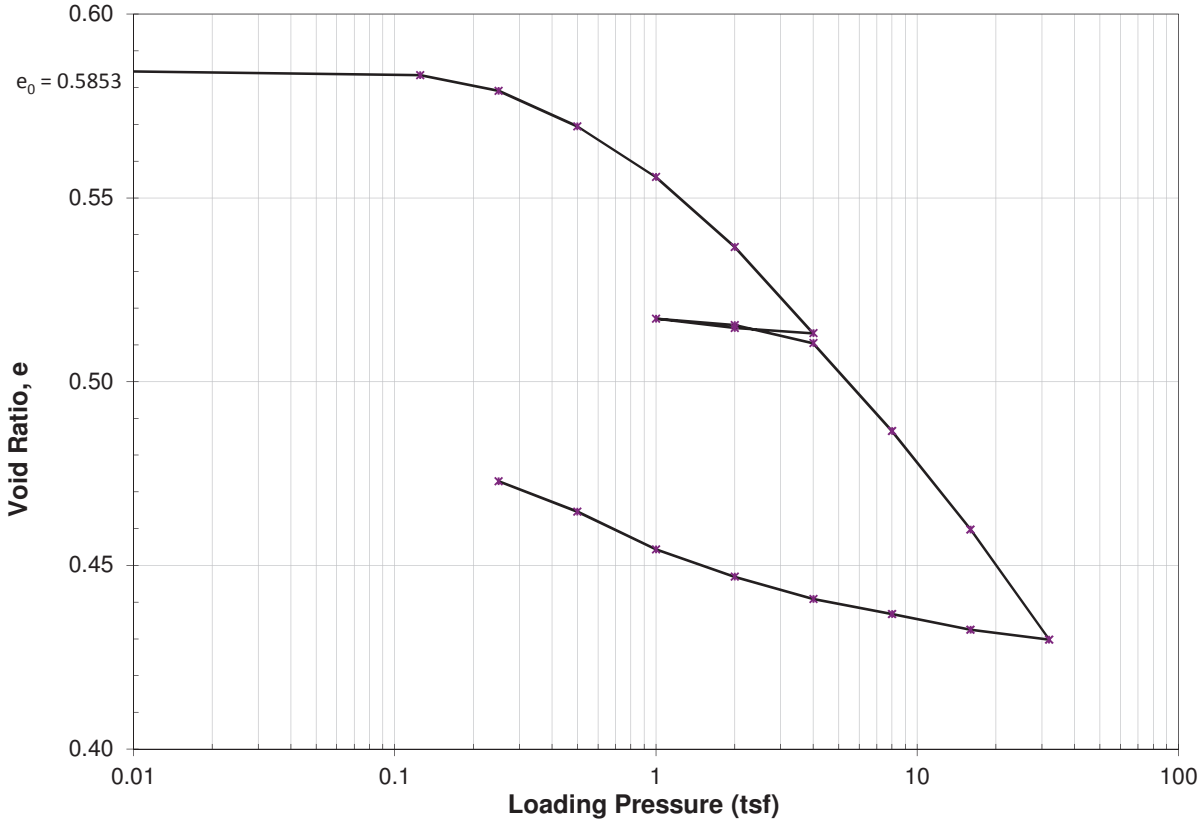

Project No.: G174-14 Project: GST No. 3 at Forest Cove No. 2 Water Plant
Sample ID: B-1, 6 to 8 feet
Sample Description: Red and gray Clayey Sand (SC) Dry Unit Weight (γ_d): 109 pcf
Estimated Consolidation Index (Cc): 0.1100 Estimated Recompression Index (Cr): 0.0119
Estimated OCR: 3.0 Estimated Preconsolidation Pressure (Pc): 1.3 tsf

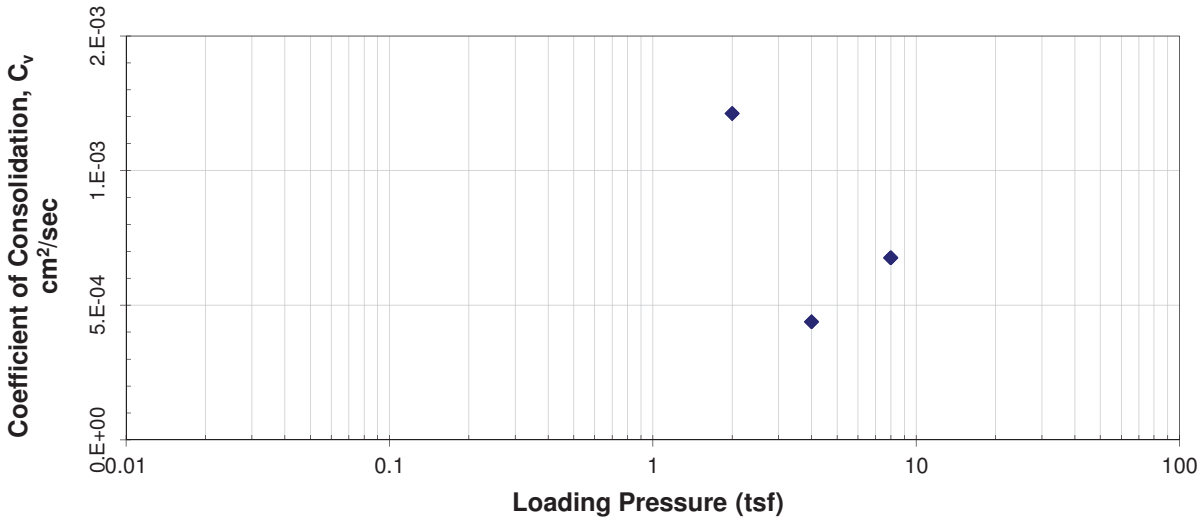

CONSOLIDATION TEST RESULTS

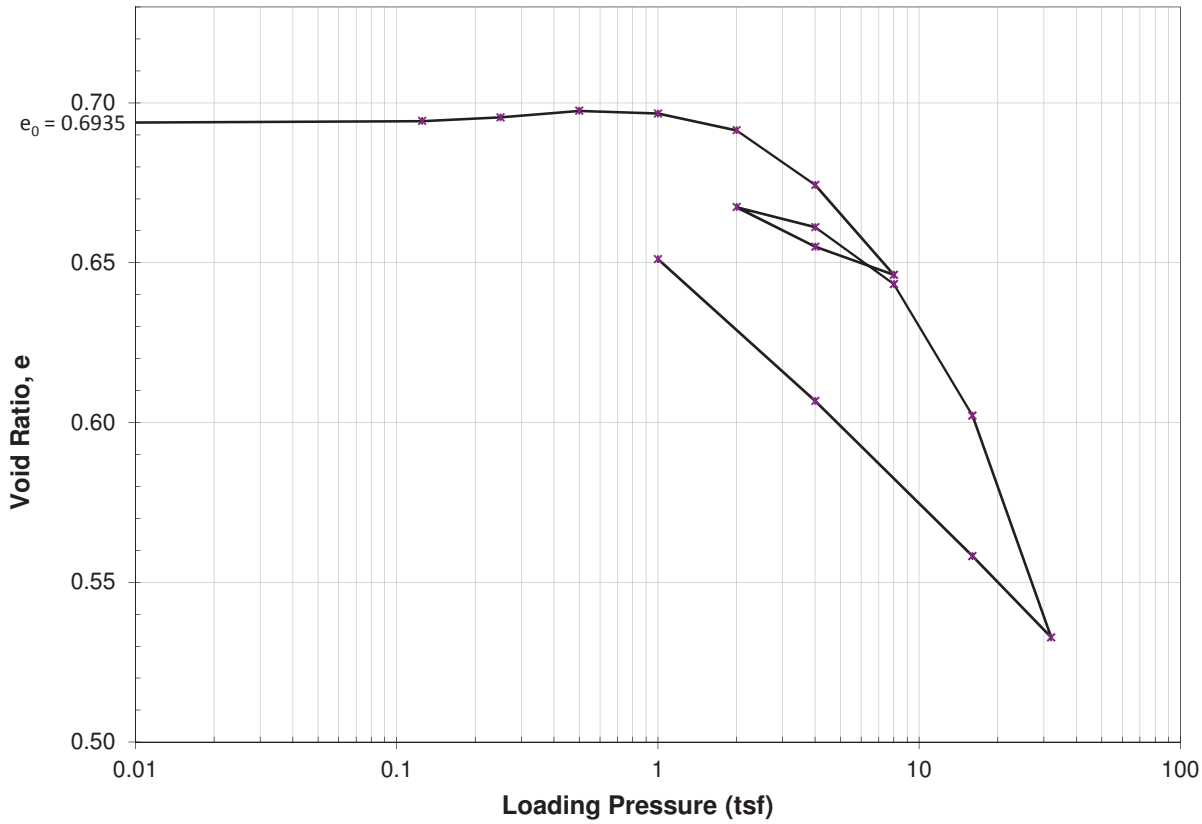

Project No.: G174-14 Project: GST No. 3 at Forest Cove No. 2 Water Plant
Sample ID: B-1, 18 to 20 feet
Sample Description: Red and gray Lean Clay (CL) Dry Unit Weight (γ_d): 102 pcf
Estimated Consolidation Index (Cc): 0.2296 Estimated Recompression Index (Cr): 0.0294
Estimated OCR: 9.9 Estimated Preconsolidation Pressure (Pc): 7.7 tsf

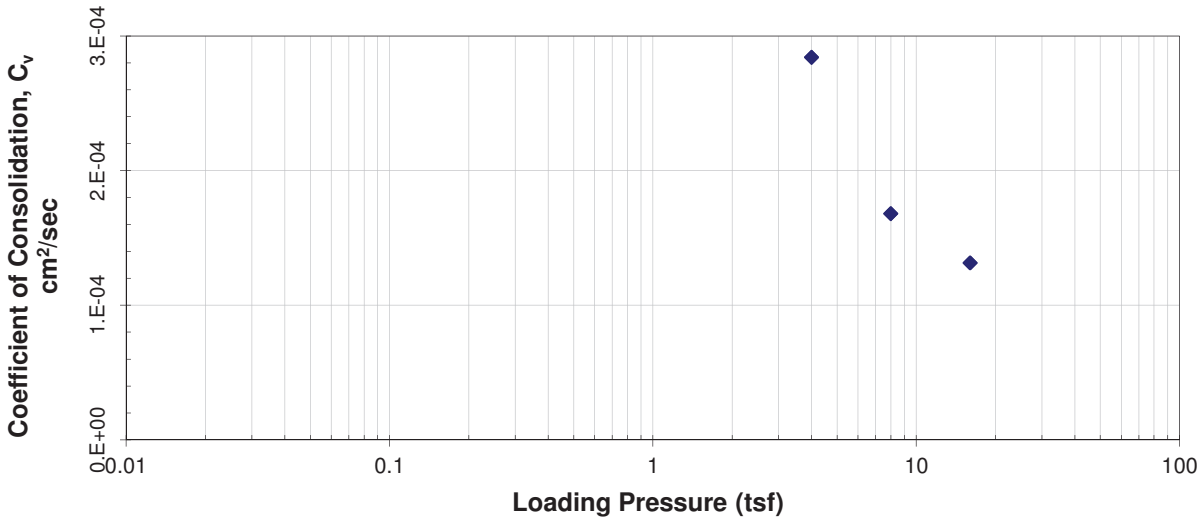

CONSOLIDATION TEST RESULTS

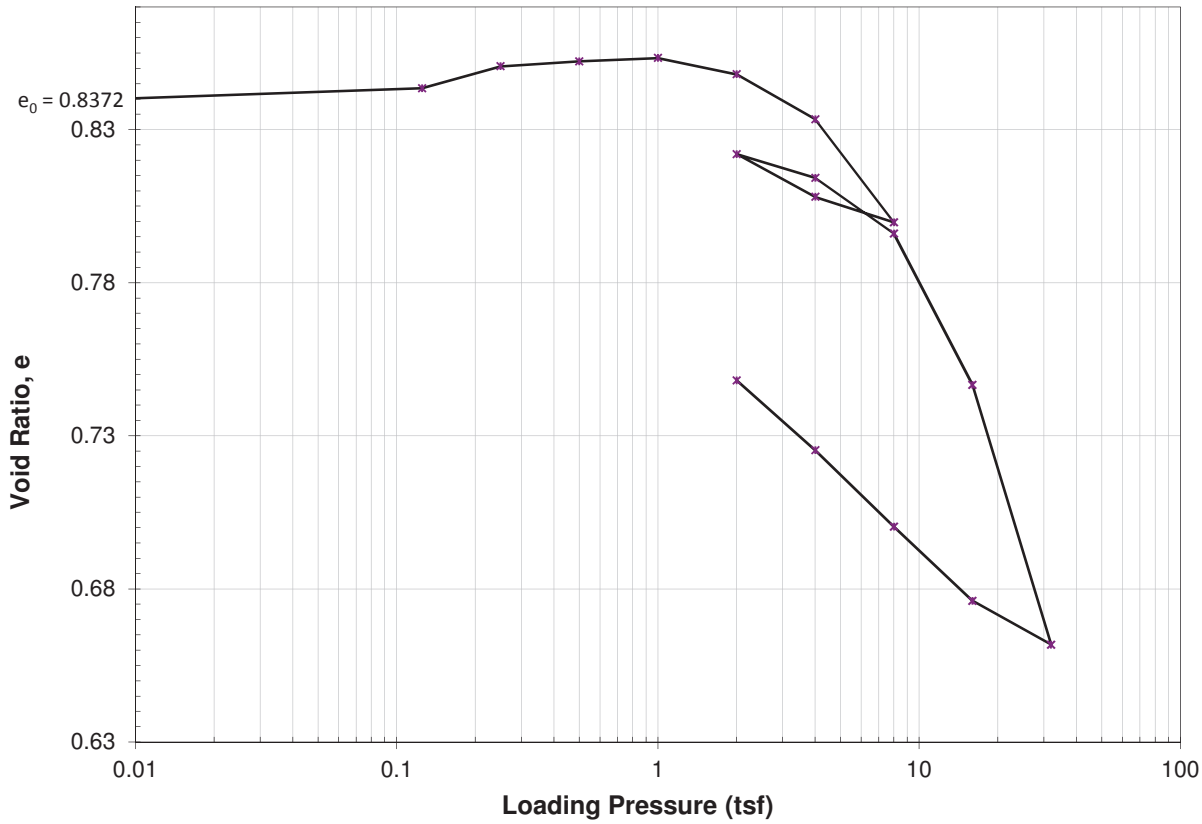

Project No.: G174-14 Project: GST No. 3 at Forest Cove No. 2 Water Plant
Sample ID: B-2, 38 to 40 feet
Sample Description: Red and brown Fat Clay (CH) Dry Unit Weight (γ_d): 95 pcf
Estimated Consolidation Index (Cc): 0.2790 Estimated Recompression Index (Cr): 0.0258
Estimated OCR: 5.8 Estimated Preconsolidation Pressure (Pc): 7.7 tsf

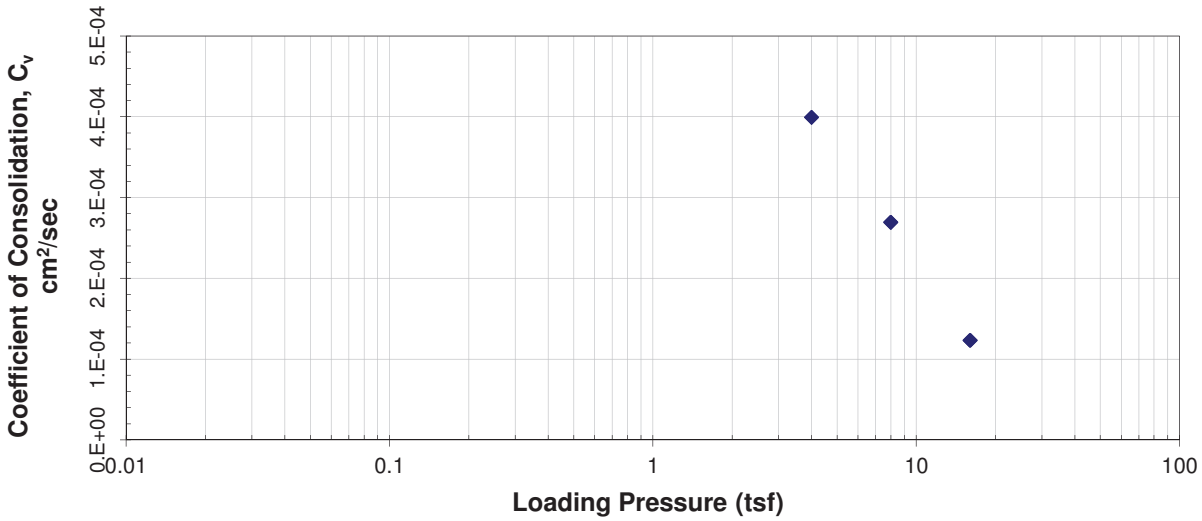

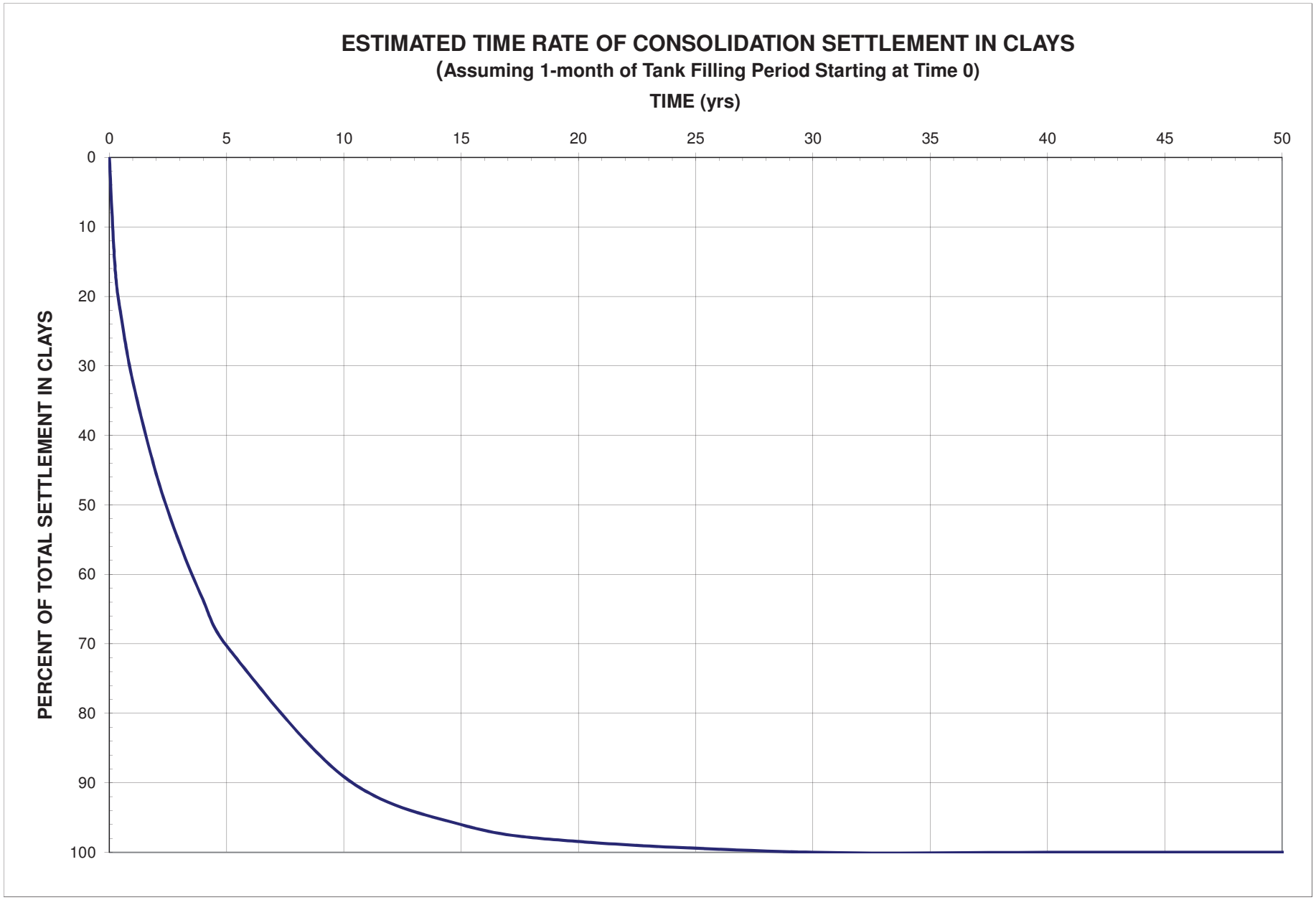
ESTIMATED TIME RATE OF CONSOLIDATION SETTLEMENT IN CLAYS
(Assuming 1-month of Tank Filling Period Starting at Time 0)
TIME (yrs)
0
5
10
15
20
25
30
35
40
45
50
PERCENT OF TOTAL SETTLEMENT IN CLAYS
0
10
20
30
40
50
60
70
80
90
100

SUMMARY OF TEST RESULTS	Project Name: GROUND STORAGE TANK NO. 3 AT FOREST COVE NO. 2 WATER PLANT
	WBS Number: S-000600-0046-4
Aviles Engineering Corporation	AEC Project Number: G174-14

Boring No.	Sample				SPT (blows/ft)	Water Content (%)	Dry Density (pcf)	Atterberg Limits			Percent Passing Sieve #200 (%)	Shear Strength (tsf)				Type of Material
	No.	Depth (ft)		Type				LL (%)	PL (%)	PI (%)		Unconfined Compression	UU (confining pressure, psi)	Torvane	Pocket Penetrometer	
		Top	Bottom													
B-1	1	0.0	2.0	UD		14									2.50	Sandy Fat Clay (CH)
	2	2.0	4.0	UD		18		53	17	36	61.3				3.25	Sandy Fat Clay (CH)
	3	4.0	6.0	UD		17	111.0						1.68 (3)		3.75	Sandy Fat Clay (CH)
	4	6.0	8.0	UD		18		36	15	21	45.5				1.75	Clayey Sand (SC)
	5	8.0	10.0	UD		17									4.25	Clayey Sand (SC)
	6	10.0	12.0	UD		17	108.5				17.8		0.80 (6)	0.69	2.25	Clayey Sand (SC)
	7	12.5	14.0	SPT	16	15					22.2					Clayey Sand (SC)
	8	14.0	16.0	UD		24	103.5	64	23	41			3.62 (8)		4.00	Fat Clay (CH)
	9	16.0	18.0	UD		20									4.25	Fat Clay (CH)
	10	18.0	20.0	UD		23		48	17	31	93.7				4.50	Lean Clay (CL)
	11	23.0	25.0	UD		21	109.4						1.98 (10)		4.50	Lean Clay (CL)
	12	28.5	30.0	SPT	26	27		54	22	32	95.5					Fat Clay (CH)
	13	33.0	35.0	UD		23	105.3						5.84 (14)		4.50	Fat Clay (CH)
	14	38.0	40.0	UD		28									4.50	Fat Clay (CH)
	15	43.0	45.0	UD		22	107.1						1.18 (17)		3.50	Lean Clay (CL)
	16	48.0	50.0	UD		23		44	21	23	99.6				4.25	Lean Clay (CL)
	17	53.0	55.0	UD		29									4.50	Fat Clay (CH)
	18	58.0	60.0	UD		23	103.6						1.51 (22)		4.50	Fat Clay (CH)
B-2	1	0.0	2.0	UD		9		27	15	12	45.3				2.75	Clayey Sand (SC)
	2	2.0	4.0	UD		17	111.9						1.74 (3)		3.75	Clayey Sand (SC)
	3	4.0	6.0	UD		16									3.75	Clayey Sand (SC)
	4	6.0	8.0	UD		17									4.25	Clayey Sand (SC)
	5	8.0	10.0	UD		17	114.2	35	18	17	28.8		0.73 (5)		3.25	Clayey Sand (SC)
	6	10.0	12.0	UD		17					22.4				4.50	Clayey Sand (SC)
	7	12.5	14.0	SPT	15	22					26.5					Clayey Sand (SC)
	8	14.5	16.0	SPT	6	29										Clayey Sand (SC)
	9	16.0	18.0	UD		19	111.3	43	17	26	90.5		3.12 (7)		4.50	Lean Clay (CL)
	10	18.0	20.0	UD		19									4.50	Lean Clay (CL)
	11	23.0	25.0	UD		19	109.4						2.16 (10)		3.50	Lean Clay (CL)
	12	28.0	30.0	UD		25					18.8				0.75	Silty Sand (SM)
	13	33.0	35.0	UD		23	106.3						2.66 (13)		4.50	Fat Clay (CH)
	14	38.0	40.0	UD		29		65	26	39	99.5				3.50	Fat Clay (CH)
	15	43.0	45.0	UD		22									4.50	Lean Clay (CL)
	16	48.0	50.0	UD		22	105.9	32	19	13	98.2		5.59 (18)		2.75	Lean Clay (CL)

Legend			
	UD = UnDisturbed sample, extruded in field SS = Split Spoon sample AG = Auger Cuttings SPT = Standard Penetration Test	LL = Liquid Limit PL = Plastic Limit PI = Plasticity Index UU = Triaxial Compession	Notes:

AVILES ENGINEERING CORP.

APPENDIX B

Plate B-1	Recommended Geotechnical Design Parameters
Plate B-2	Load Coefficients for Pipe Loading
Plate B-3	Live Loads on Pipe Crossing Under Roadway

G174-14 GST NO. 3 AT FOREST COVE NO. 2 WATER PLAN
SOIL PARAMETERS FOR UNDERGROUND UTILITIES

Boring	Depth (ft)	Soil Type	γ (pcf)	γ' (pcf)	OSHA Type	E'n (psi)	Short-Term					Long-Term				
							C (psf)	φ (deg)	K_a	K_0	K_p	C' (psf)	φ' (deg)	K_a	K_0	K_p
B-1	0-6	Stiff to very stiff CH	130	68	B	600	1600	0	1.00	1.00	1.00	150	16	0.57	0.72	1.76
	6-14	Medium dense SC	128	66	C	300	0	30	0.33	0.50	3.00	0	30	0.33	0.50	3.00
	14-18	Very stiff to hard CH	129	67	C*	1000	3600	0	1.00	1.00	1.00	300	16	0.57	0.72	1.76
	18-20	Hard CL	132	70	C*	1000	3600	0	1.00	1.00	1.00	300	18	0.53	0.69	1.89
B-2	0-4	Medium dense SC	131	69	C	600	0	30	0.33	0.50	3.00	0	30	0.33	0.50	3.00
	4-16	Loose to medium dense SC	133	71	C	300	0	28	0.36	0.53	2.77	0	28	0.36	0.53	2.77
	16-20	Very stiff to hard CL	132	70	C*	1000	3000	0	1.00	1.00	1.00	300	18	0.53	0.69	1.89

(1) γ = Unit weight for soil above water level, γ' = Buoyant unit weight for soil below water level. E'n = Soil modulus for native soils;

(2) C = Soil ultimate cohesion for short term (upper limit of 3,000 psf for design purposes), φ = Soil friction angle for short term;

(3) C' = Soil ultimate cohesion for long term (upper limit of 300 psf for design purposes), φ' = Soil friction angle for long term;

(4) K_a = Coefficient of active earth pressure, K_0 = Coefficient of at-rest earth pressure, K_p = Coefficient of passive earth pressure;

(5) CL = Lean Clay, CH = Fat Clay, SC = Clayey Sand;

(6) OSHA Soil Types for soils in the top 20 feet below grade:

A: cohesive soils with qu = 1.5 tsf or greater (qu = Unconfined Compressive Strength of the Soil)

B: cohesive soils with qu = 0.5 tsf or greater

C: cohesive soils with qu = less than 0.5 tsf, fill materials, or granular soil

C*: submerged cohesive soils; dewatered cohesive soils can be considered OSHA Type C.

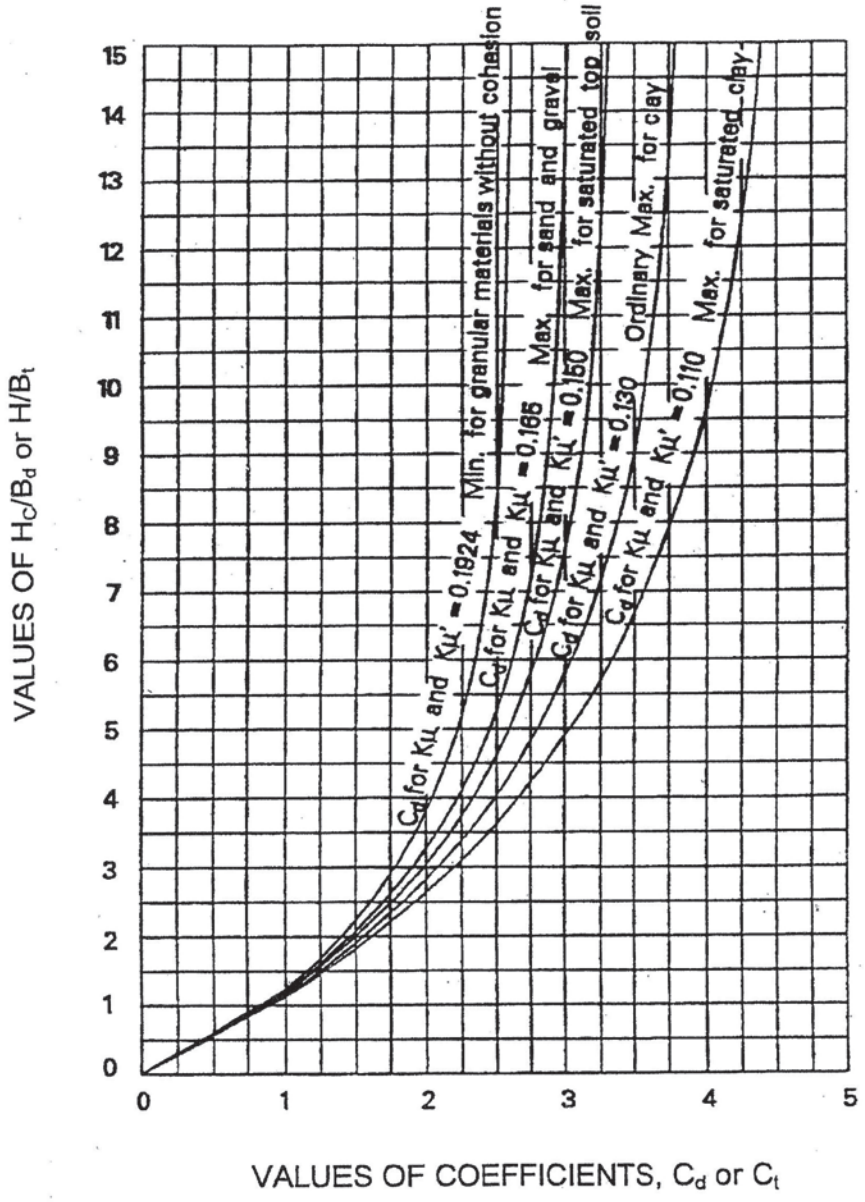

Reference: US Army Corps of Engineers Engineering Manual, EM 1110-2-2902, Oct. 31, 1997, Figure 2-5.

AVILES ENGINEERING CORP.

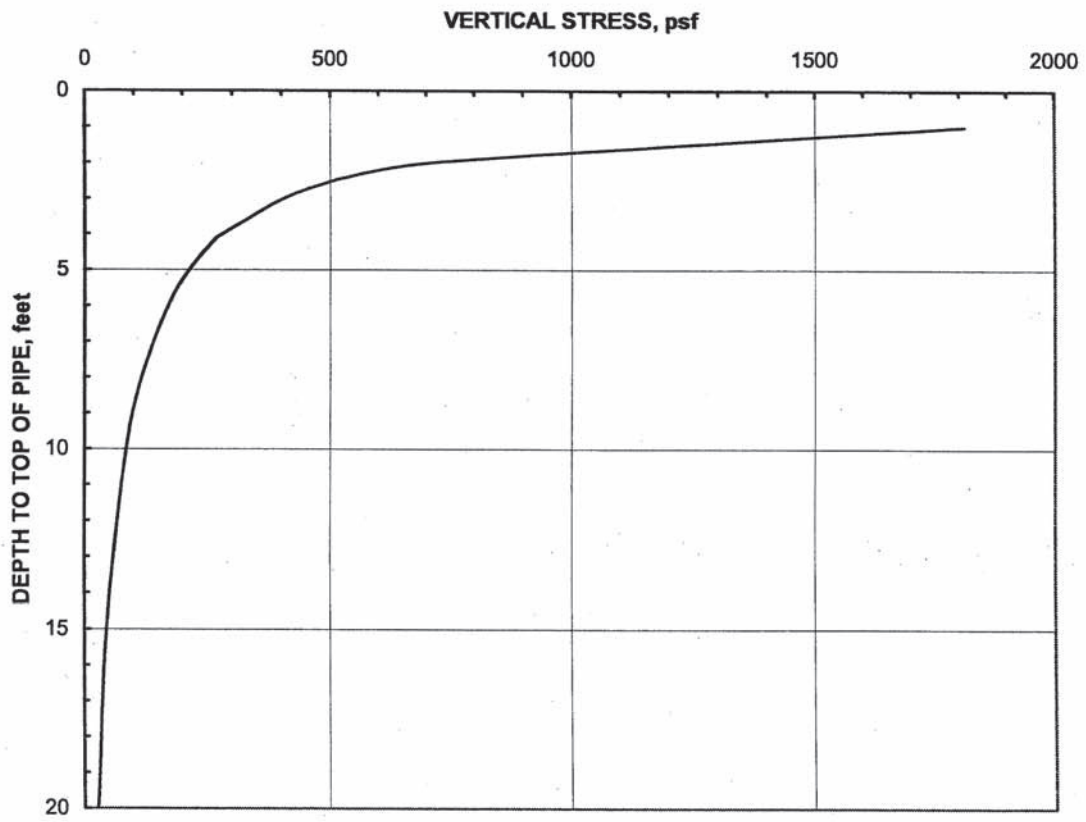

LIVE LOADS ON PIPE CROSSING UNDER ROADWAY

Note: 1. The vertical stress was estimated using AASHTO HS20 truck axle loadings on paved surfaces (Reference: ASCE 15-98, "Standard Practice for Direct Design of Buried Precast Concrete Pipe Using Standandard Installations").
2. Single truck passing.

AVILES ENGINEERING CORP.

APPENDIX C

Plate C-1	Critical Heights of Cut Slopes in Nonfissured Clays
Plate C-2	Maximum Allowable Slopes
Plate C-3	A Combination of Bracing and Open Cuts
Plate C-4	Lateral Pressure Diagrams for Open Cuts in Cohesive Soil-Long Term Conditions
Plate C-5	Lateral Pressure Diagrams for Open Cuts in Cohesive Soil-Short Term Conditions
Plate C-6	Lateral Pressure Diagrams for Open Cuts in Sand
Plate C-7	Bottom Stability for Braced Excavation in Clay
Plate C-8	Thrust Force Calculation
Plate C-9	Thrust Force Example Calculation
Plate C-10	Design Parameters for Bearing Thrust Block

AYLES ENGINEERING CORP.

Critical Heights of Cut Slopes in Nonfissured Clays

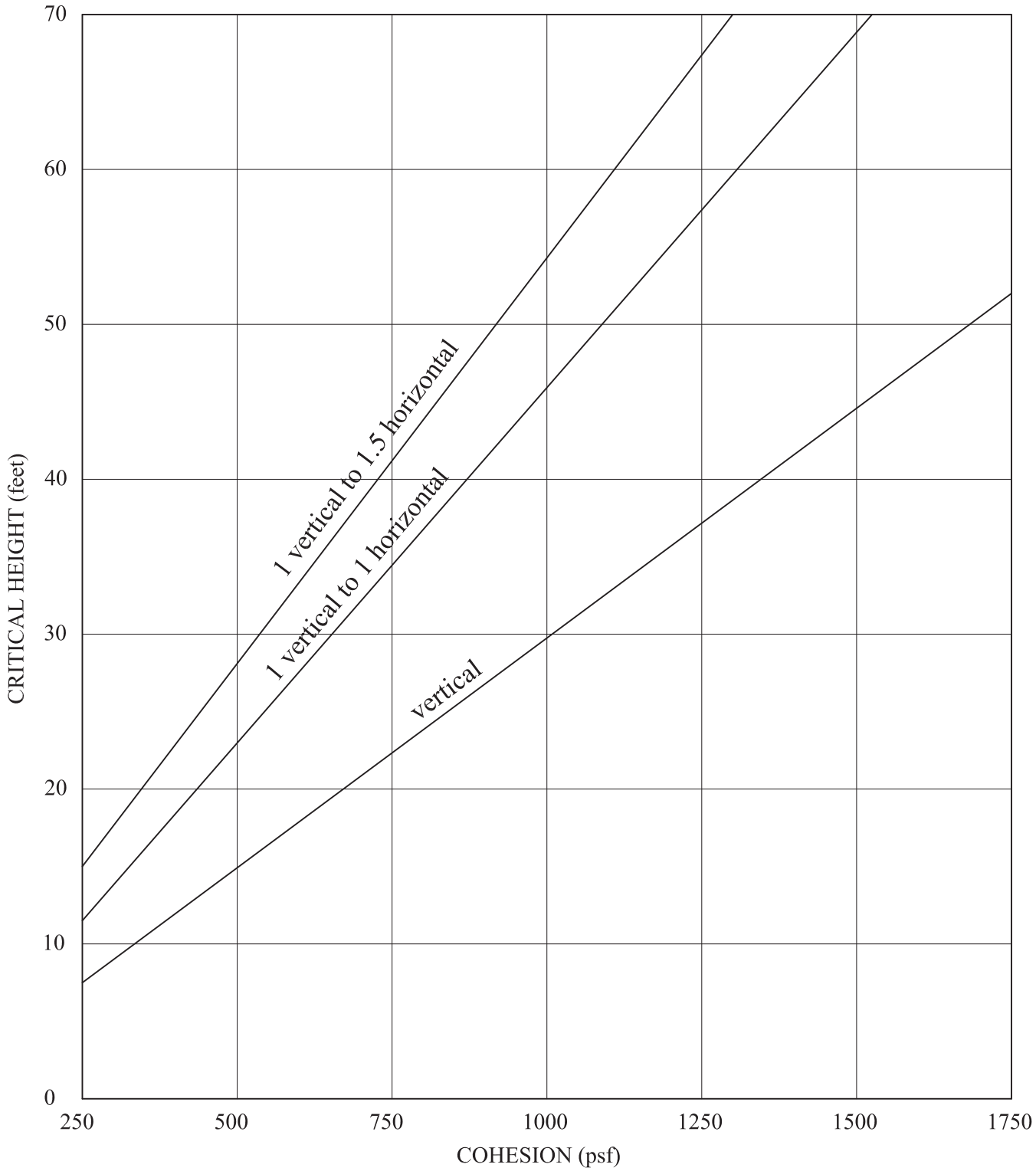

Note: The charts are calculated based on NAVFAC DM7.1, Page 7.1-319, assuming the critical circles are toe circles, and wet unit weight of soils = 125pcf.

AYLES ENGINEERING CORP.

MAXIMUM ALLOWABLE SLOPES

	SHORT TERM	LONG TERM
TYPE A SOILS	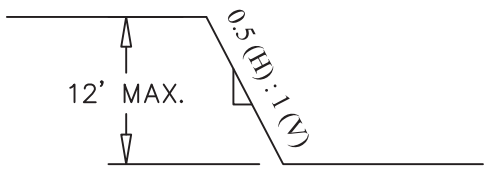	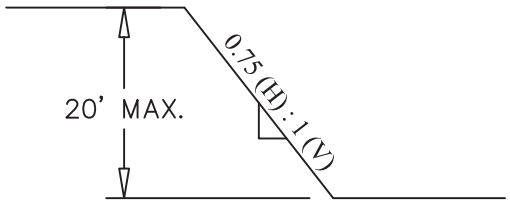
TYPE B SOILS	N/A	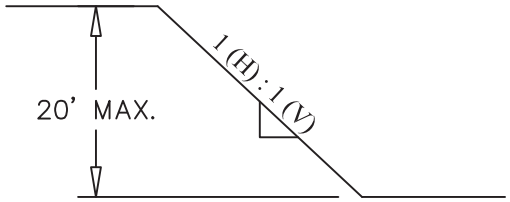
TYPE C SOILS	N/A	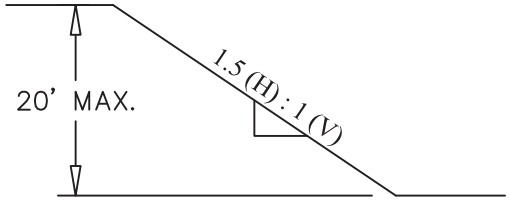

NOTES:

(1) For Type A soils, a short term maximum allowable slope of 0.5 (H) : 1 (V) is allowed in excavations that are 12 feet or less in depth; short term (24 hours or less) maximum allowable slopes for excavations greater than 12 feet in depth shall be 0.75 (H) : 1 (V).

(2) Maximum depth for above slopes is 20 feet. For slopes deeper than 20 feet, trench protection should be designed by the Contractor's professional engineer.

Reference: OSHA, Safety and Health Regulations for Construction, 1926 Subpart P.

AYLES ENGINEERING CORP.

A COMBINATION OF BRACING AND OPEN CUTS

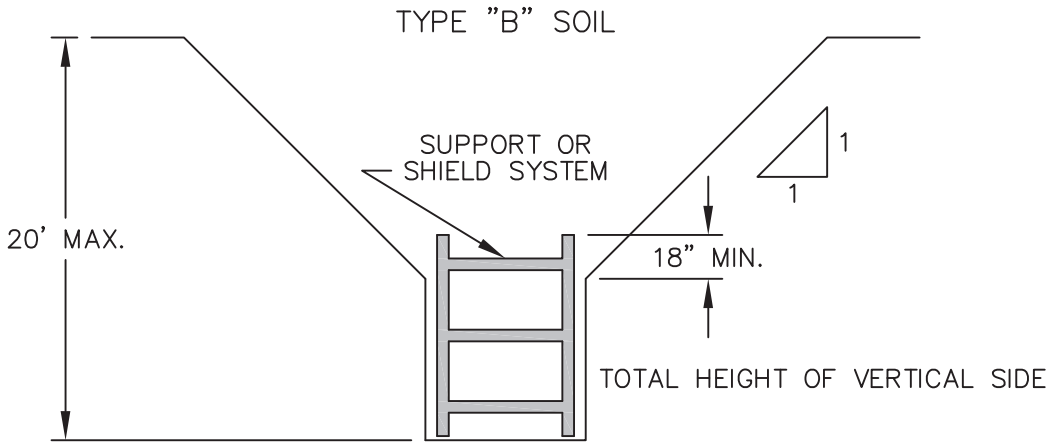

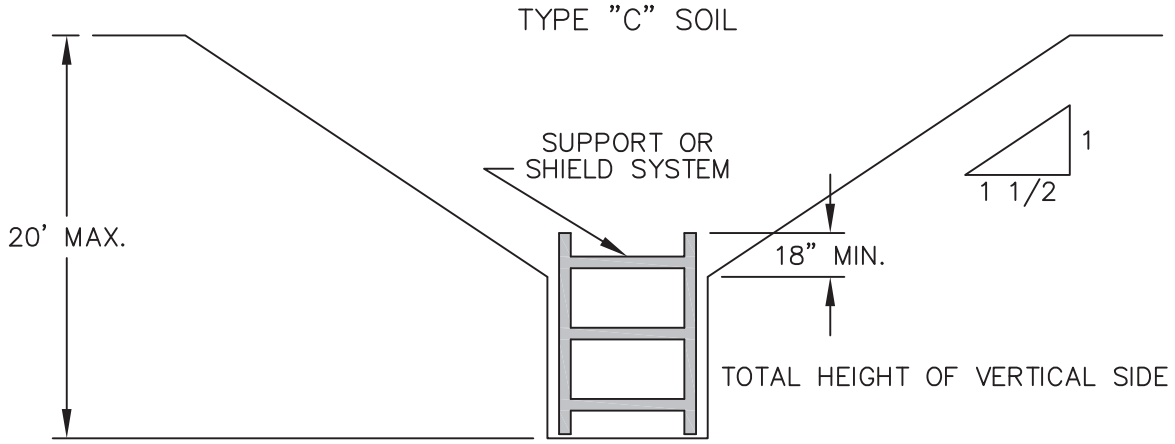

Reference: OSHA, Safety and Health Regulations for Construction, 1926 Subpart P.

AVILES ENGINEERING CORP.

LATERAL PRESSURE DIAGRAMS
FOR OPEN CUTS IN COHESIVE SOIL - LONG TERM CONDITIONS

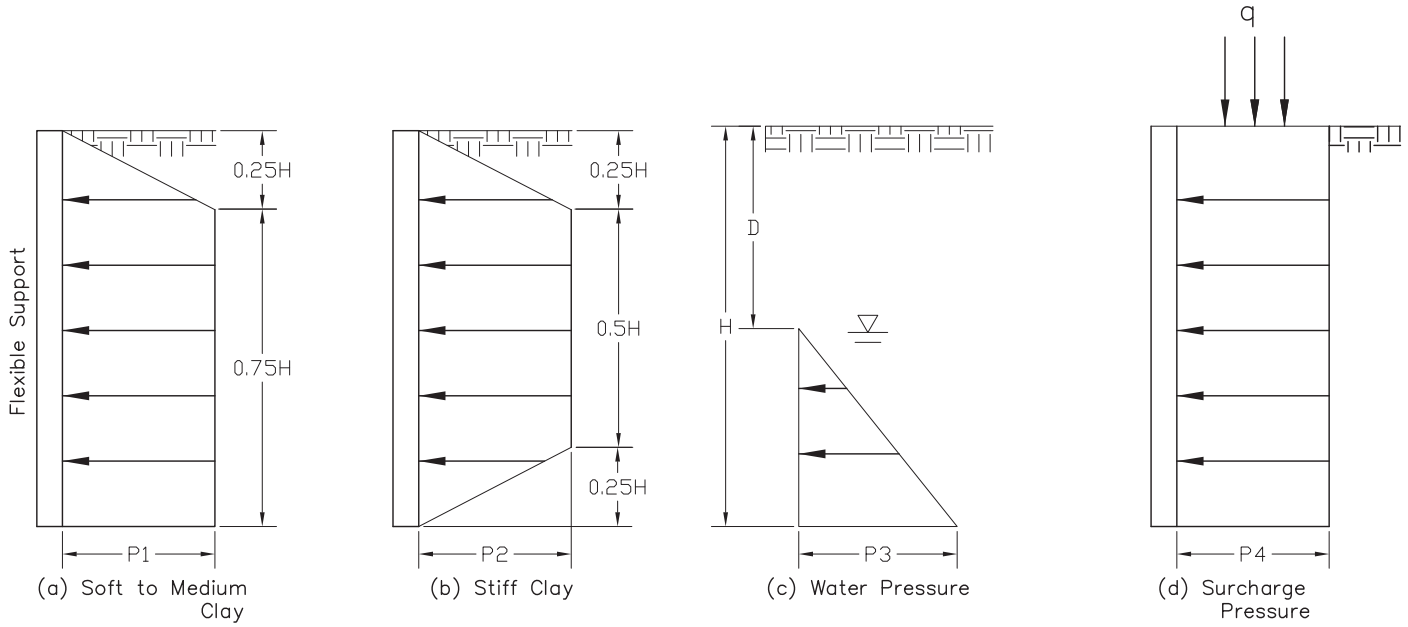

Empirical Pressure Distributions

Where:
H = Total excavation depth, feet
D = Depth to water table, feet
P1 = Lateral earth pressure = γH-4C, psf
P2 = Lateral earth pressure = 0.4γH, psf
P3 = Water pressure = γ_w (H-D), psf
P4 = Lateral earth pressure caused by surcharge = qK_a, psf
γ = Effective unit weight of soil, pcf
γ_w = Unit weight of water, pcf
C = Drained shear strength or cohesion, psf
K_a = Coefficient of active earth pressure

Notes:
1. All pressures are additive.
2. No safety factors are included.
3. For use only during long term construction.
4. If γH/C < 4, use section (b),
   If 4 < γH/C < 6, use larger of section (a) or (b),
   If γH/C > 6, use section (a).

Reference: Peck, R.B. (1969), "Deep Excavation and Tunneling in soft Ground", 7th ICSMFE, State of art volume, pp. 225-290.

AYLES ENGINEERING CORP.

LATERAL PRESSURE DIAGRAMS
FOR OPEN CUTS IN COHESIVE SOIL - SHORT TERM CONDITIONS

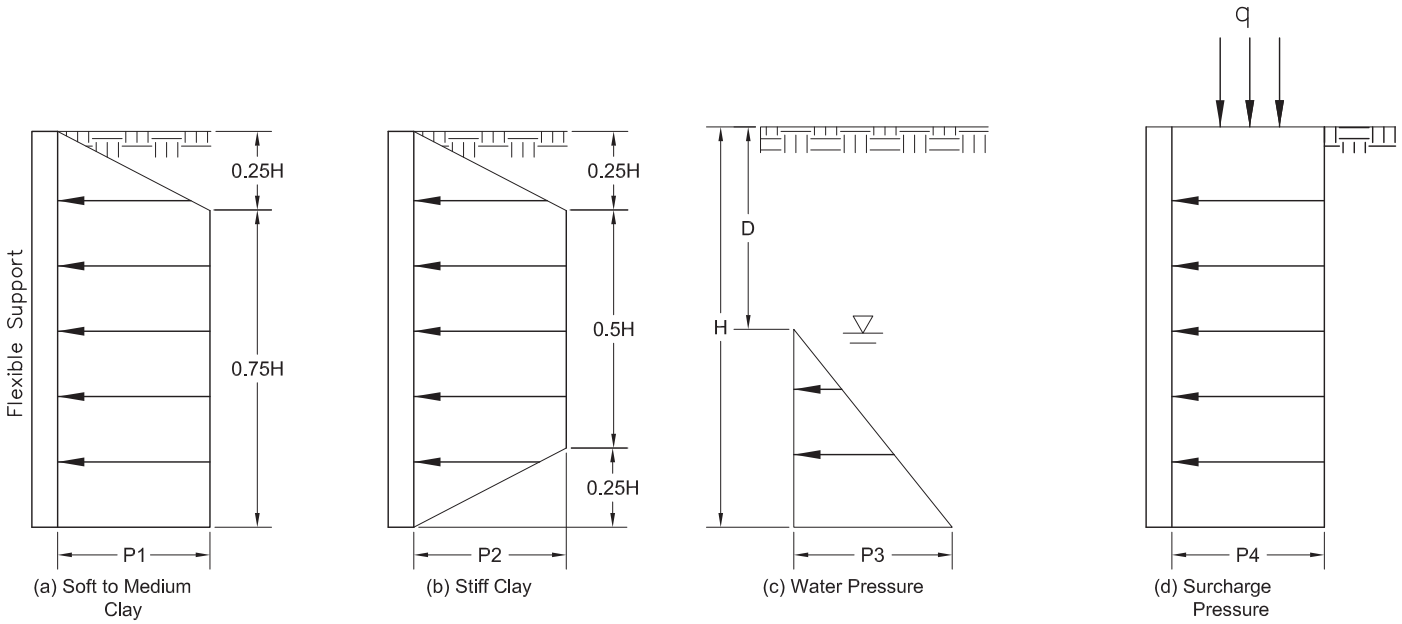

Empirical Pressure Distributions

Where:
H = Total excavation depth, feet
D = Depth to water table, feet
P1 = Lateral earth pressure = $\gamma H - 4S_u$, psf
P2 = Lateral earth pressure = $0.2\gamma H$, psf
P3 = Water pressure = γ_w (H-D), psf
P4 = Lateral earth pressure caused by surcharge = qK_a, psf
γ = Effective unit weight of soil, pcf
γ_w = Unit weight of water, pcf
S_u = Undrained shear strength = $q_u/2$, psf
q_u = Unconfined compressive strength, psf
K_a = Coefficient of active earth pressure

Notes:
1. All pressures are additive.
2. No safety factors are included.
3. For use only during short term construction.
4. If $\gamma H/S_u < 4$, use section (b),
   If $4 < \gamma H/S_u < 6$, use larger of section (a) or (b),
   If $\gamma H/S_u > 6$, use section (a).

Reference: Peck, R.B. (1969), "Deep Excavation and Tunneling in soft Ground", 7th ICSMFE, State of art volume, pp. 225-290.

AYLES ENGINEERING CORP.

LATERAL PRESSURE DIAGRAMS
FOR OPEN CUTS IN SAND

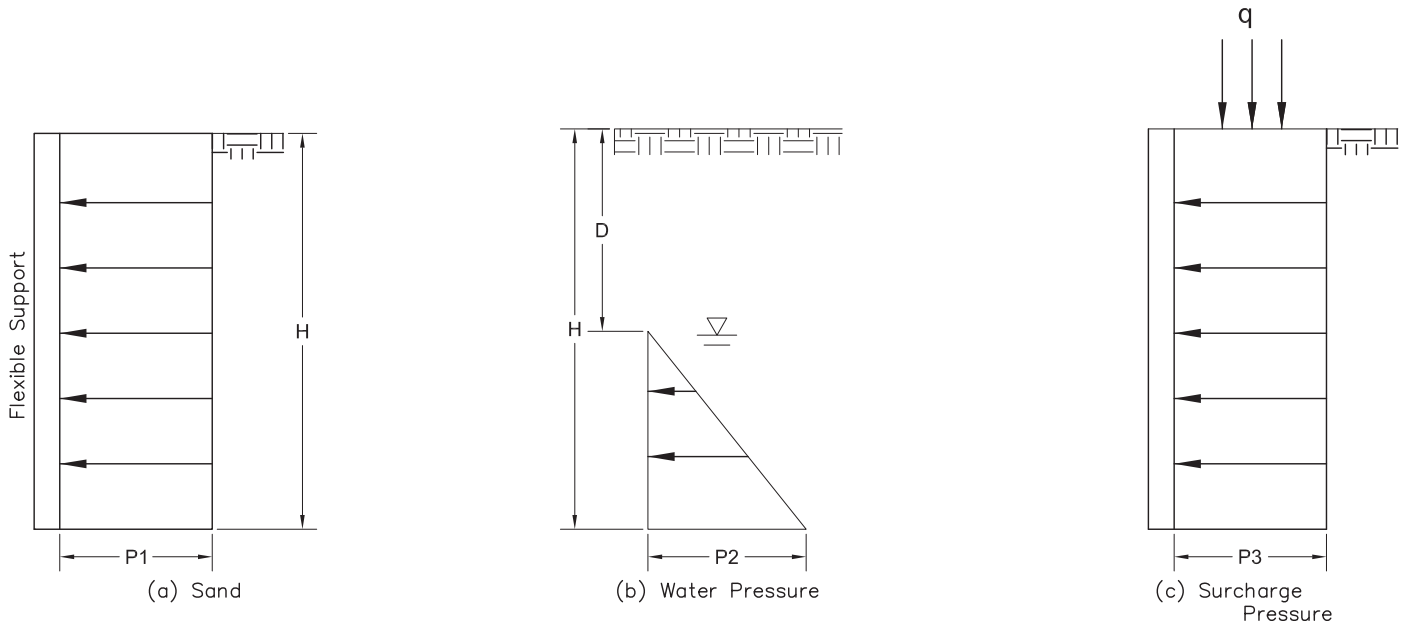

Empirical Pressure Distributions

Where:
H = Total excavation depth, feet
D = Depth to water table, feet
P1 = Lateral earth pressure = $0.65*\gamma HK_a$, psf
P2 = Water pressure = γ_w (H-D), psf
P3 = Lateral earth pressure caused by surcharge = qK_a, psf
γ = Effective unit weight of soil, pcf
γ_w = Unit weight of water, pcf
K_a = Coefficient of active earth pressure = $(1-\sin\varphi)/(1+\sin\varphi)$
φ = Drained friction angle

Notes:
1. All pressures are additive.
2. No safety factors are included.

Reference: Peck, R.B. (1969), "Deep Excavation and Tunneling in soft Ground", 7th ICSMFE, State of art volume, pp. 225-290.

BOTTOM STABILITY FOR BRACED EXCAVATION IN CLAY

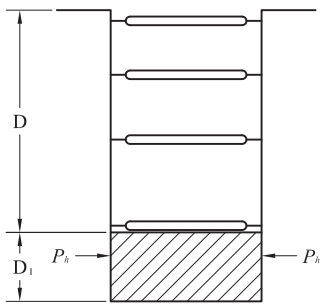

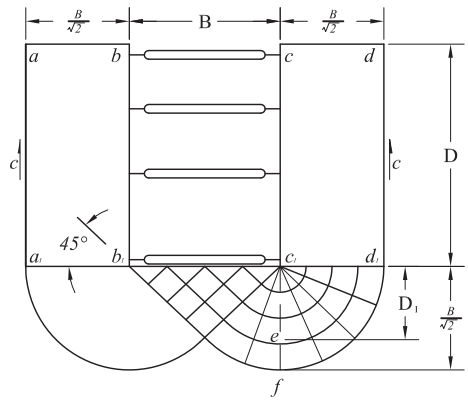

Factor of Safety against bottom of heave,

$$F.S = \frac{NcC}{(\gamma D+q)}$$

where, Nc = Coefficient depending on the dimension of the excavation (see Figure at the bottom)
C = Undrained shear strength of soil in zone immediately around the bottom of the excavation,
γ = Unit weight of soil,
D = Depth of excavation,
q = Surface surcharge.

If F.S < 1.5, sheeting should be extended further down to achieve stability

$$\textit{Depth of Buried Length, } (D_1) = \frac{1.5(\gamma D+q)-NcC}{(C/B)-0.5\gamma} \; ; D_1 \geq 5\ ft.$$

Pressure on buried length, P_h:

For $D_1 < 0.47B$; $P_h = 1.5\ D_1(\gamma D - 1.4\ CD/B - 3.14C)$

For $D_1 > 0.47B$; $P_h = 0.7\ (\gamma DB - 1.4\ CD - 3.14CB)$

where; B = width of excavation

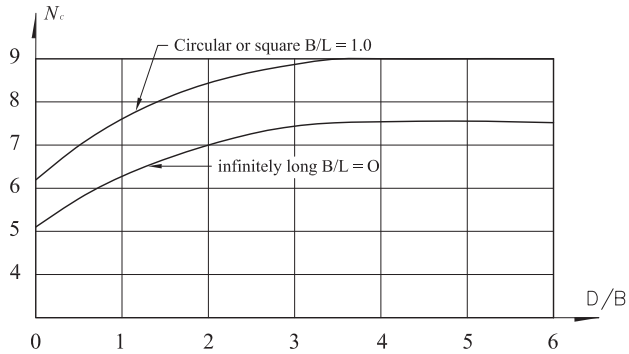

N_c rectangular = $(0.84 + 0.16B/L)N_c$ square

Reference: Bjerrum, L. and Eide, O., Stability of Strutted Excavations in Clay, Geotechnique, 6, 32-47 (1956).

THRUST FORCE CALCULATION

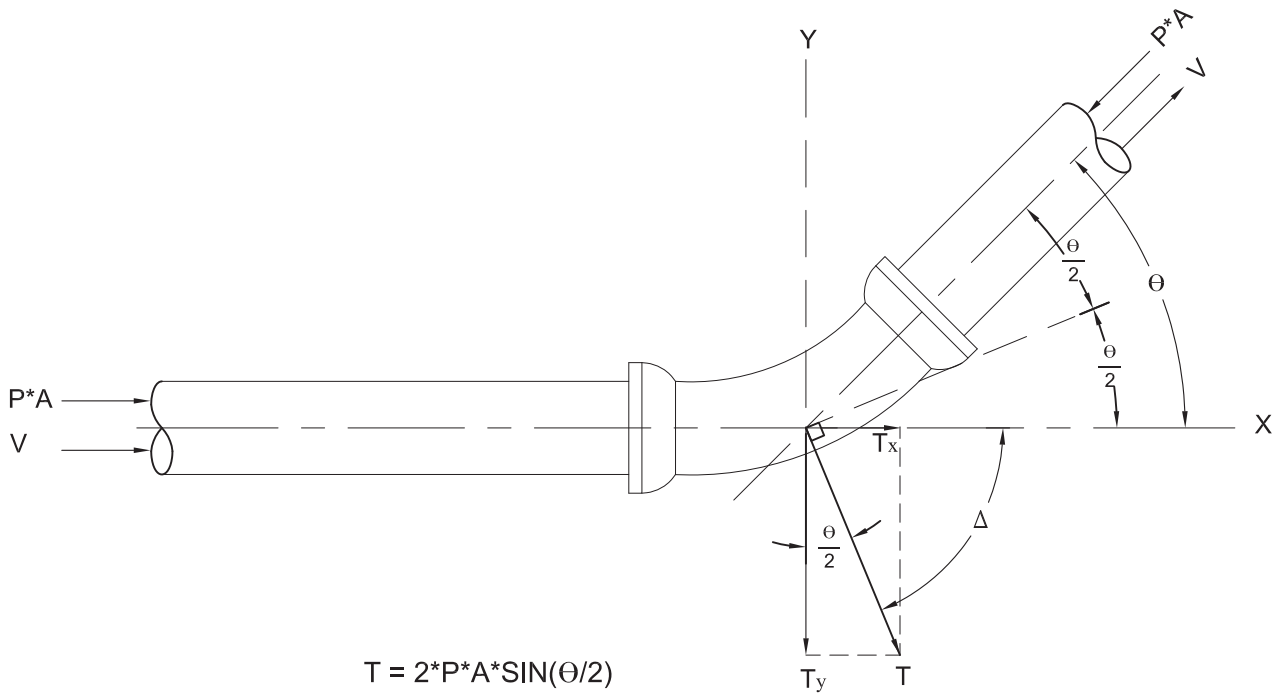

$T = 2*P*A*SIN(\Theta/2)$

$T_x = P*A*(1-COS\Theta)$

$T_y = P*A*SIN\Theta$

$\Delta = (90-\Theta/2)$

Where:

T = resultant thrust force

T_x= thrust force component along the X axis

T_y= thrust force component along the Y axis

P = maximum sustained pressure

A = cross-sectional area of pipe = $(\pi/4)*(D)^2$

D = inside diameter conduit

Θ = angle of bend

Δ = angle between X axis and T

V = fluid velocity

Reference: American Water Works Association, Manual MA, "Concrete Pressure Pipe".

THRUST FORCE EXAMPLE CALCULATION

Trust Force Example Calculation

$T = 2*P*A*SIN(\Theta/2)$

$T_x = P*A*SIN(1-COS\Theta)$

$T_y = P*A*SIN\ \Theta$

Where:

T = resultant thrust force

T_x = thrust force component along the X axis

T_y = thrust force component along the Y axis

P = maximum sustained pressure

A = cross-section area of pipe = $(\pi/4)*(D)^2$

D = inside diameter of conduit

U = angle of bend

Given: D = 24", P = 200 psi, $\Theta = 60°$

Find: T, T_x and T_y

$A = (\pi/4)*(24)^2 = 452.39\ in^2$

T = 2*200*452.39*SIN(60/2) = 90,478 lb

T_x = 200*452.39*(1-COS60) = 45,239 lb

T_y = 200*452.39*SIN60 = 78,356 lb

DESIGN PARAMETERS FOR BEARING THRUST BLOCK

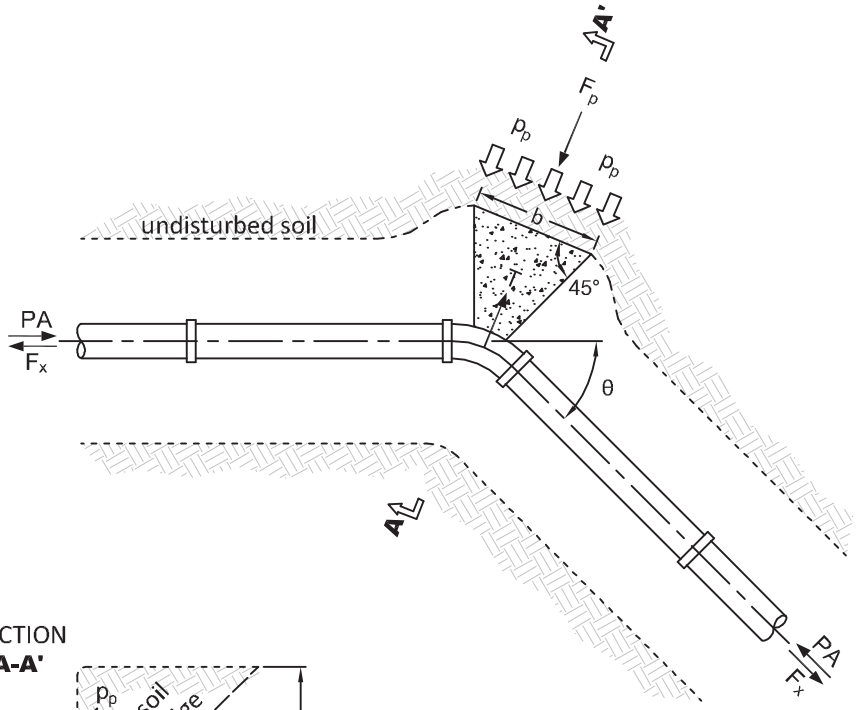

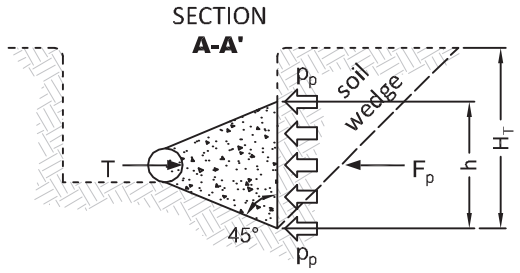

Required Bearing Area:

$$A_b = hb = \frac{F_s\ 2PA\ \text{Sin}\ \frac{\theta}{2}}{p_p}$$

Required Block Width:

$$b = \frac{2F_s\ PA\ \text{Sin}\ \frac{\theta}{2}}{h\ p_p}$$

Where:

$p_p = \Upsilon H_c K_p + 2C\sqrt{K_p}$

$K_p = \text{Tan}^2\ (45° + \frac{\emptyset}{2})$

Where:

T = resultant thrust force on the bend

F_p = resistance force developed by passive soil pressure

A_b = minimum bearing area of block base

h = height of thrust block

b = width of thrust block

A = pipe cross-sectional area

θ = bend deflection angle

p_p = passive soil pressure

H_T = depth to bottom of block

Υ = soil unit weight

K_p = coefficient of passive earth pressure

$\emptyset$ = soil internal friction angle

C = soil cohesion

F_s = factor of safety (usually 1.5)

H_c = mean depth from ground surface to the plane of resistance (center of bearing area of a thrust block)

p = maximum sustained pressure

F_x = conduit frictional resistance per unit length