ENGINEERING CORP.

GEOTECHNICAL INVESTIGATION

SURFACE WATER TRANSMISSION PROGRAM CONTRACT 87
24-INCH WATERLINE ALONG WEST BELLFORT
FROM STELLA LINK TO BUFFALO SPEEDWAY
WBS NO. S-000900-0125-4
HOUSTON, TEXAS

Reported to:
Kuo & Associates, Inc.
Houston, Texas

by

Aviles Engineering Corporation
5790 Windfern
Houston, Texas 77041
713-895-7645

REPORT NO. G148-14

December 2014

5790 Windfern Road
Houston, Texas 77041
Tel: (713)-895-7645
Fax: (713)-895-7943

December 16, 2014

Mr. Shaheen Chowdhury, P.E., R.P.L.S.
Kuo & Associates, Inc.
10700 Richmond Avenue, Suite 113
Houston, Texas 77042

Reference: **Geotechnical Investigation**
Surface Water Transmission Program Contract 87
24 Inch Waterline along West Bellfort Avenue
Between Stella Link Road and Buffalo Speedway
Houston, Texas
WBS No.: S-000900-0125-4
AEC Report No. G148-14

Dear Mr. Chowdhury,

Aviles Engineering Corporation (AEC) is pleased to present this report of the results of our draft geotechnical investigation for the above referenced project. Notice to proceed for the geotechnical investigation was provided via email on August 20, 2014 by Mr. Shaheen Chowdhury, P.E., of Kuo & Associates, Inc., based on AECs proposal G2014-03-15R3, dated July 30, 2014.

AEC appreciates the opportunity to be of service to you. Please call us if you have any questions or comments concerning this report or when we can be of further assistance.

Respectfully submitted,
Aviles Engineering Corporation
(TBPE Firm Registration No. F-42)

STATE OF TEXAS
WILBER L. WANG
99226
LICENSED
PROFESSIONAL ENGINEER

Wilber L. Wang, M.Eng., P.E.
Project Engineer

Shou Ting Hu, M.S.C.E., P.E.
Principal Engineer

Reports Submitted: 3 Kuo & Associates, Inc.
1 File (electronic)

Z:\ENGINEERING\REPORTS\2014\148-14 SWTP CONTRACT 87 WATERLINE - KUO & ASSOCIATES (WILBER)\G148-14 DRAFT.DOCX

AVILES ENGINEERING CORP.

TABLE OF CONTENTS

EXECUTIVE SUMMARY i
1.0 INTRODUCTION 1
1.1 General 1
1.2 Purpose and Scope 1
2.0 SUBSURFACE EXPLORATION 2
2.1 Soil Borings 2
3.0 LABORATORY TESTING PROGRAM 3
4.0 SITE CONDITIONS 4
4.1 Subsurface Conditions 4
4.2 Hazardous Materials 6
4.3 Geologic Conditions 6
4.4 Subsurface Variations 7
5.0 GEOTECHNICAL ENGINEERING RECOMMENDATIONS 8
5.1 Geotechnical Parameters for Underground Utilities 8
5.2 Installation of Waterlines by Open-Cut Method 8
5.2.1 Loadings on Pipes 9
5.2.2 Trench Stability 10
5.2.3 Thrust Force Design Recommendations 13
5.2.4 Bedding and Backfill 14
5.3 Installation of Waterlines by Trenchless Method 14
5.3.1 Loadings on Pipes 14
5.3.2 Auger Pits 15
5.3.3 Auger Pit Excavation 15
5.3.4 Auger Face Stability During Construction 15
5.3.5 Backfill for Auger Pits 16
5.3.6 Influence of Augering on Adjacent Structures 16
5.4 Tunneling and Its Influence on Adjacent Structures 18
5.4.1 Tunnel Access Shafts 19
5.4.2 Tunnel Face Stability during Construction 21
5.4.2.1 General 21
5.4.2.2 Anticipated Ground Behavior 21
5.4.2.3 Influence of Tunneling on Existing Structures 22
5.4.3 Measures to Reduce Distress from Tunneling 23
5.4.4 Monitoring Existing Structures 24
5.5 Pavement Reconstruction 24
5.5.1 Rigid Pavement 25
5.5.2 Reinforcing Steel 26
5.5.3 Pavement Subgrade Preparation 26
6.0 CONSTRUCTION CONSIDERATIONS 27
6.1 Site Preparation 27
6.2 Groundwater Control 27
6.3 Construction Monitoring 29
6.4 Monitoring of Existing Structures 29
7.0 LIMITATIONS 29

AVILES ENGINEERING CORP.

APPENDICES

APPENDIX A

Plate A-1	Vicinity Map
Plate A-2	Boring Location Plan
Plates A-3 to A-7	Boring Logs
Plate A-8	Key to Symbols
Plate A-9	Classification of Soils for Engineering Purposes
Plate A-10	Terms Used on Boring Logs
Plate A-11	ASTM & TXDOT Designation for Soil Laboratory Tests
Plates A-12 to A-14	Summary of Lab Data

APPENDIX B

Plate B-1	Generalized Soil Profiles
Plate B-2	Piezometer Installation Details

APPENDIX C

Plates C-1 to C-2	Recommended Geotechnical Design Parameters
Plate C-3	Load Coefficients for Pipe Loading
Plate C-4	Live Loads on Pipe Crossing Under Roadway

APPENDIX D

Plate D-1	Critical Heights of Cut Slopes in Nonfissured Clays
Plate D-2	Maximum Allowable Slopes
Plate D-3	A Combination of Bracing and Open Cuts
Plate D-4	Lateral Pressure Diagrams for Open Cuts in Cohesive Soil-Long Term Conditions
Plate D-5	Lateral Pressure Diagrams for Open Cuts in Cohesive Soil-Short Term Conditions
Plate D-6	Lateral Pressure Diagrams for Open Cuts in Sand
Plate D-7	Bottom Stability for Braced Excavation in Clay
Plate D-8	Thrust Force Calculation
Plate D-9	Thrust Force Example Calculation
Plate D-10	Design Parameters for Bearing Thrust Block
Plate D-11	Relation between the Width of Surface Depression and Depth of Cavity for Tunnels
Plate D-12	Tunnel Behavior and TBM Selection
Plate D-13	Methods of Controlling Ground Water in Tunnel and Grouting Material Selection

APPENDIX E

Plates E-1 to E-2	DARWin v3.0 Computer Program Output

APPENDIX F

Plate F-1	Piezometer Installation and Plugging Report

ENGINEERING CORP.

EXECUTIVE SUMMARY

The report submitted herein presents the results of Aviles Engineering Corporation's (AEC) geotechnical investigation for the City of Houston's (COH) Surface Water Transmission Program (SWTP) Contract 87 Waterline along West Bellfort Avenue in Houston, Texas (Houston/Harris County Key Map Nos.: 532S and T). A vicinity map is presented on Plate A-1, in Appendix A. Based on drawings (dated December 18, 2014) provided by Kuo & Associates, Inc. (KAI), the proposed improvements include: (i) approximately 4,550 linear feet of 24-inch diameter waterline installed primarily along the median of West Bellfort Avenue from Stella Link Road to Buffalo Speedway; (ii) approximately 90 feet of 12 inch diameter waterline on the east side of the intersection of West Bellfort Avenue and US-90A; and (iii) approximately 285 feet of 8 inch diameter waterline along the south right of way of West Bellfort Avenue from approximately Station 41+55 to approximately Station 44+35. The 24 inch diameter waterline will be installed primarily by open cut method, although tunnel method will be used where the waterline crosses beneath Highway US-90A. The 8 and 12 inch diameter waterlines will be installed by trenchless method. The invert depth of the 24 inch diameter waterline along the alignment typically varies from approximately 10 to 11.5 feet, although the invert depth increases to up to 15.5 feet at utility crossings, and from 26.5 to 27.4 feet at the intersection of US-90A.

1. Subsurface Soil Conditions: Based on the borings, subsurface soil conditions along the project alignment generally consist of approximately 2 to 4 feet of stiff to very stiff lean/fat clay (CL/CH) fill at the ground surface, underlain by stiff to hard lean/fat clay (CL/CH) to the boring termination depths. Approximately 8 feet of medium dense silty sand (SM) was encountered at a depth of 19 feet in Boring B-1, and approximately 11 feet of very stiff silty clay (CL-ML) and medium dense silty sand (SM) was encountered at a depth of 16 feet in Boring B-3.

2. Subsurface Soil Properties: The subsurface clayey soils encountered in the borings have none to very high plasticity, with liquid limits (LL) ranging from 26 to 82, and plasticity indices (PI) ranging from 7 to 52. The cohesive soils encountered are classified as "CL-ML", "CL", and "CH" type soils and granular soils were classified as "SM" type soils in accordance with ASTM D 2487.

3. Groundwater Conditions: Groundwater was encountered at a depth of 24 to 29 feet below grade during drilling and was subsequently observed at a depth of 17.0 to 23.8 feet after the initial encounter in Borings B-1 through B-3. Groundwater at the site may be pressurized. Groundwater was not encountered in Borings B-4 and B-5. A detailed description of ground water readings is presented on Table 4 in Section 4.1 of this report.

4. Hazardous Materials: No signs of visual staining or odors were encountered during field drilling or during processing of the soil samples in the laboratory.

5. Geologic Hazards: Limited field observations were made in the project area by AEC's Senior Geologist for evidences of faulting. No evidences of faulting were observed in the project area.

6. Design parameters and recommendations for installation of underground utilities by open cut method are presented in Section 5.2 of this report.

7. Design parameters and recommendations for installation of underground utilities by trenchless method are presented in Section 5.3 of this report.

8. Design parameters and recommendations for installation of underground utilities by tunnel method are presented in Section 5.4 of this report.

7. Design parameters and recommendations for reconstruction of concrete pavement are presented in Section 5.5 of this report.

This Executive Summary is intended as a summary of the investigation and should not be used without the full text of this report.

ENGINEERING CORP.

GEOTECHNICAL INVESTIGATION

SURFACE WATER TRANSMISSION PROGRAM CONTRACT 87
24-INCH WATERLINE ALONG WEST BELLFORT
FROM STELLA LINK TO BUFFALO SPEEDWAY
WBS NO. S-000900-0125-4
HOUSTON, TEXAS

1.0 INTRODUCTION

1.1 General

The report submitted herein presents the results of Aviles Engineering Corporation's (AEC) geotechnical investigation for the City of Houston's (COH) Surface Water Transmission Program (SWTP) Contract 87 Waterline along West Bellfort Avenue in Houston, Texas (Houston/Harris County Key Map Nos.: 532S and T). A vicinity map is presented on Plate A-1, in Appendix A. Based on drawings (dated December 18, 2014) provided by Kuo & Associates, Inc. (KAI), the proposed improvements include: (i) approximately 4,550 linear feet of 24-inch diameter waterline installed primarily along the median of West Bellfort Avenue from Stella Link Road to Buffalo Speedway; (ii) approximately 90 feet of 12 inch diameter waterline on the east side of the intersection of West Bellfort Avenue and US-90A; and (iii) approximately 285 feet of 8 inch diameter waterline along the south right of way of West Bellfort Avenue from approximately Station 41+55 to approximately Station 44+35. The 24 inch diameter waterline will be installed primarily by open cut method, although tunnel method will be used where the waterline crosses beneath Highway US-90A. The 8 and 12 inch diameter waterlines will be installed by trenchless method. The invert depth of the 24 inch diameter waterline along the alignment typically varies from approximately 10 to 11.5 feet, although the invert depth increases to up to 15.5 feet at utility crossings, and from 26.5 to 27.4 feet at the intersection of US-90A.

1.2 Purpose and Scope

The purpose of this geotechnical investigation is to evaluate the subsurface soil conditions along the alignment and develop geotechnical engineering recommendations for design and construction of underground utilities by open cut, trenchless, and tunnel methods. The scope of this geotechnical investigation is summarized below:

1. Drilling and sampling five geotechnical borings ranging from 25 to 40 feet below existing grade;
2. Soil laboratory testing on selected soil samples;
3. Engineering analyses and recommendations for the installation of waterlines by open cut method, including loadings on pipes, bedding, lateral earth pressure parameters, trench stability, and backfill requirements;
4. Engineering analyses and recommendations for the installation of waterlines by trenchless method, including loadings on pipes, auger face stability, as well as bedding, lateral earth pressure parameters, trench stability, and backfill requirements for auger pits;
5. Engineering analyses and recommendations for the installation of waterlines by tunnel method, including tunnel access shafts, reaction walls, and tunnel stability;
6. Construction recommendations for installation of waterlines by open cut, trenchless, and tunnel methods.

2.0 SUBSURFACE EXPLORATION

2.1 Soil Borings

As requested by KAI, the boring layout (boring spacing of 1,000 feet) and depths were performed in general accordance with Chapter 7 of the May 2001 COH SWTP Design Manual. As requested by the SWTP Program Manager, Lockwood, Andrews, and Newnam, Inc. (LAN), the minimum boring depth for the 24 inch diameter SWTP waterline is 25 feet below grade. The subsurface exploration consisted of drilling and sampling a total of five borings ranging from 25 to 40 feet below existing grade. The boring locations are shown on the Boring Location Plan on Plate A-2, in Appendix A. Total drilling footage is 157 feet. Boring survey data is presented on the boring logs. The boring designations and depths and corresponding waterline invert depths are presented in Table 1 below.

Table 1. Boring Number, Station, and Depth

Boring/ PZ No.	Boring/PZ Depth (ft)	Station	Boring Surface Elevation (ft)	Invert Elevation at Boring (ft)	Invert Depth at Boring (ft)
B-1	27	42+54.24	52.186	47.20 (8-in WL) 41.00 (24-in WL)	4.99 (8-in WL) 11.19 (24-in WL)
B-2	40	33+66.65	52.462	47.80 (12-in WL) 41.00 (24-in WL) 26.00 (24-in WL tunnel)	4.66 (12-in WL) 11.46 (24-in WL) 26.46 (24-in WL tunnel)
B-3/ PZ-1	40/30	30+03.93	53.387	41.75 (24-in WL) 26.00 (24-in WL tunnel)	11.64 (24-in WL) 27.39 (24-in WL tunnel)
B-4	25	20+28.40	56.140	45.75 (24-in WL)	10.39 (24-in WL)

Boring/ PZ No.	Boring/PZ Depth (ft)	Station	Boring Surface Elevation (ft)	Invert Elevation at Boring (ft)	Invert Depth at Boring (ft)
B-5	25	9+91.14	57.811	46.25 (24-in WL)	11.56 (24-in WL)

Existing pavement at Borings B-2 and B-3 was first cut with a core barrel prior to field drilling. The field drilling was performed with a truck-mounted drilling rig primarily using dry auger method, and then using wet rotary method once water-bearing granular soils were encountered or the borings began to cave in. Undisturbed samples of cohesive soils were obtained from the borings by pushing 3-inch diameter thin-wall, seamless steel Shelby tube samplers in general accordance with ASTM D 1587. Granular soils were sampled with a 2-inch split-barrel sampler in accordance with ASTM D 1586. Standard Penetration Test resistance (N) values were recorded for the granular soils as "Blows per Foot" and are shown on the boring logs. Strength of the cohesive soils was estimated in the field using a hand penetrometer. The undisturbed samples of cohesive soils were extruded mechanically from the core barrels in the field and wrapped in aluminum foil; all samples were sealed in plastic bags to reduce moisture loss and disturbance. The samples were then placed in core boxes and transported to the AEC laboratory for testing and further study. Boring B-3 was converted to a piezometer upon completion of drilling. The remaining borings were grouted with cement-bentonite. Existing pavement was patched with non-shrink grout. The piezometer was plugged and abandoned after 30 day water readings were obtained.

3.0 LABORATORY TESTING PROGRAM

Soil laboratory testing was performed by AEC personnel. Samples from the borings were examined and classified in the laboratory by a technician under the supervision of a geotechnical engineer. Laboratory tests were performed on selected soil samples in order to evaluate the engineering properties of the foundation soils in accordance with applicable ASTM Standards. Atterberg limits, moisture contents, percent passing a No. 200 sieve, and dry unit weight tests were performed on typical samples to establish the index properties and confirm field classification of the subsurface soils. Strength properties of cohesive soils were determined by means of unconfined compression (UC) and undrained-unconsolidated (UU) triaxial tests performed on undisturbed samples. The test results are presented on the boring logs. Details of the soils encountered in the borings are presented on Plates A-3 through A-7, in Appendix A. A key to the boring logs, classification of soils for engineering purposes, terms used on boring logs, and reference ASTM Standards for laboratory testing are presented on Plates A-8 through A-11, in Appendix A. A summary of the laboratory test results is presented on Plates A-12 through A-14, in Appendix A.

4.0 SITE CONDITIONS

Based on our site visit, West Bellfort is currently a four lane (2 lanes in each direction) concrete roadway, with a grass median. In general, the existing concrete pavement along the project alignment appears to be in good condition.

A summary of pavement types encountered in our borings is presented on Table 2.

Table 2. Existing Pavement Encountered at Pavement Borings

Boring No.	Pavement Section
B-2	12" concrete
B-3	9" concrete

4.1 Subsurface Conditions

Details of the soils encountered during drilling are presented in the boring logs. Soil strata encountered in our borings are summarized below. A generalized subsurface profile along the project alignment is presented on Plate B-1, in Appendix B.

Boring	Depth (ft)	Description of Stratum
B-1	0 - 4	Fill: very stiff Lean Clay w/Sand (CL), with roots
	4 - 8	Stiff to very stiff, Lean Clay (CL)
	8 - 12	Very stiff, Fat Clay w/Sand (CH), with slickensides, sandy clay seams, abundant calcareous nodules, and siltstone fragments
	12 - 19	Stiff to very stiff, Lean Clay (CL)
	19 - 27	Medium dense, Silty Sand (SM), with siltstone fragments
B-2	0 - 1	Pavement: 12" concrete
	1 - 4	Very stiff to hard, Fat Clay (CH)
	4 - 6	Hard, Sandy Lean Clay (CL), with siltstone fragments
	6 - 14	Very stiff to hard, Fat Clay (CH), with slickensides
	14 - 28	Very stiff to hard, Fat Clay w/Sand (CH)
	28 - 30	Hard, Lean Clay (CL), with abundant silt seams and partings
	30 - 32	Hard, Fat Clay (CH), with slickensides and siltstone fragments
	32 - 40	Very stiff to hard, Lean Clay w/Sand (CL), with siltstone fragments

Boring	Depth (ft)	Description of Stratum
B-3	0 - 0.8	Pavement: 9” concrete
	0.8 - 2	Fill: stiff to very stiff, lime-stabilized Fat Clay (CH)
	2 - 8	Stiff to very stiff, Lean Clay w/Sand (CL)
	8 - 14	Stiff to very stiff, Fat Clay (CH), with slickensides and siltstone fragments
	14 - 16	Very stiff, Lean Clay (CL)
	16 - 24	Very stiff, Silty Clay (CL-ML), with siltstone fragments
	24 - 26	Medium dense, Silty Sand (SM)
	26 - 28	Hard, Fat Clay (CH), with slickensides
	28 - 40	Very stiff, Sandy Lean Clay (CL), with silt partings
B-4	0 - 4	Fill: stiff to very stiff, Sandy Lean Clay (CL)
	4 - 12	Stiff to very stiff, Fat Clay w/Sand (CH)
	12 - 14	Very stiff, Fat Clay (CH), with slickensides
	14 - 25	Stiff to hard, Sandy Lean Clay (CL)
B-5	0 - 4	Fill: very stiff, Fat Clay w/Sand (CH)
	4 - 15	Stiff to very stiff, Fat Clay w/Sand (CH)
	15 - 25	Very stiff, Lean Clay (CL), with silt partings

A summary of granular soils encountered in the borings is presented in Table 3.

Table 3. Granular Soils Encountered in Borings

Boring	Depth to Granular Soil	Soil Type
B-1	19’ to 27’	Medium dense, Silty Sand (SM)
B-3	16’ to 24’ 24’ to 26’	Very stiff, Silty Clay (CL-ML) Medium dense, Silty Sand (SM)

Subsurface Soil Properties: The subsurface clayey soils encountered in the borings have none to very high plasticity, with liquid limits (LL) ranging from 26 to 82, and plasticity indices (PI) ranging from 7 to 52. The cohesive soils encountered are classified as “CL-ML”, “CL”, and “CH” type soils and granular soils were classified as “SM” type soils in accordance with ASTM D 2487. High plasticity clays can undergo significant volume changes due to seasonal changes in moisture contents. “CH” soils undergo significant volume changes due to seasonal changes in soil moisture contents. “CL” type soils with lower LL (less than 40) and PI (less than 20) generally do not undergo significant volume changes with changes in moisture content. However, “CL” soils with LL approaching 50 and PI greater than 20 essentially behave as “CH” soils and could undergo significant volume changes. Slickensides were encountered in the fat clays.

Groundwater Conditions: Groundwater was encountered at a depth of 24 to 29 feet below grade during drilling and was subsequently observed at a depth of 17.0 to 23.8 feet after the initial encounter in Borings B-1 through B-3. Groundwater at the site may be pressurized. Groundwater was not encountered in Borings B-4 and B-5. After completion of drilling, Boring B-3 was converted to a piezometer. Piezometer installation details are presented on Plates B-2, in Appendix B. The piezometer was plugged and abandoned after the 30 day water reading was obtained. Detailed groundwater levels are summarized in Table 4. Piezometer installation and plugging reports are presented on Plate F-1, in Appendix F.

Table 4. Groundwater Depths below Existing Ground Surface

Boring/PZ No.	Date Drilled	Boring/PZ Depth (ft)	Groundwater Depth (ft)	Groundwater Depth in Piezometer (ft)
B-1	9/2/14	27	Dry (Drilling) 17.3 (Complete)	-
B-2	9/2/14	40	29 (Drilling) 23.8 (15 Min.)	-
B-3/PZ-1	9/2/14	40	24 (Drilling) 17.0 (15 Min.)	14.5 (9/3/14) 13.3 (10/3/14)
B-4	9/2/14	25	Dry	-
B-5	9/2/14	25	Dry	-

The information in this report summarizes conditions found on the date the borings were drilled. It should be noted that our groundwater observations are short-term; groundwater depths and subsurface soil moisture contents will vary with environmental variations such as frequency and magnitude of rainfall and the time of year when construction is in progress.

4.2 Hazardous Materials

No signs of visual staining or odors were encountered during field drilling or during processing of the soil samples in the laboratory.

4.3 Geologic Conditions

AEC performed a preliminary fault investigation, which included a review of available literature, aerial photographs, public maps, and limited field observations. According to the published maps "*Principal Active Faults of the Houston Area (after O'Neill and Van Siclen, May 1984)*", and "*Principal Surface*

Faults in the Central Houston Metropolitan Area (after O' Neill, Van Siclen, with additions by C. Norman, May 13, 2004)", no documented faults are located adjoining, in, or crossing the project alignment. The closest fault to the project alignment is an unnamed fault associated with the Pierce Junction Salt Dome. The fault crosses West Bellfort Avenue approximately 0.2 miles west of Stella Link Road and Stella Link Road approximately 0.2 miles south of West Bellfort Avenue.

Limited field observations were made along and adjoining the project alignment by AEC Senior Geologist for evidences of faulting. No evidences of faulting were observed adjoining, in, or crossing the project alignment. AEC does not recommend any further fault studies for the project alignment.

Limitations: The preliminary fault investigation provided in this report is limited to a review of literature, aerial photographs and maps and our limited field observations, and distances are scaled from maps. Faults may exist in the project area or surrounding area due to the following reasons: not observed during the reconnaissance due to limitations of the scope of work and cost; the presence of obscuring vegetation and environmental features; modification of the land surface by human activities; and lack of documentation in the literature. Faults may also be present below ground but do not currently have surface expressions. Identification of these faults is beyond the scope of work for this project. The observations made during the fault reconnaissance represent conditions at the time of the reconnaissance.

4.4 Subsurface Variations

It should be emphasized that: (i) at any given time, groundwater depths can vary from location to location, and (ii) at any given location, groundwater depths can change with time. Groundwater depths will vary with seasonal rainfall and other climatic/environmental events. Subsurface conditions may vary away from and in between the boring locations.

Clay soils in the Houston area typically have secondary features such as slickensides and contain sand/silt seams/lenses/layers/pockets. It should be noted that the information in the boring logs is based on 3-inch diameter soil samples. In Borings B-1, B-4, and B-5, the samples were obtained continuously at intervals of 2 feet from the ground surface to a depth of 20 feet, then at intervals of 5 feet thereafter to the boring termination depths. In Borings B-2 and B-3, the samples were obtained continuously at intervals of 2 feet from the ground surface to a depth of 35 feet, then at intervals of 5 feet thereafter to the boring termination

depths. A detailed description of the soil secondary features may not have been obtained due to the small sample size and sampling interval between the samples. Therefore, while a boring log shows some soil secondary features, it should not be assumed that the features are absent where not indicated on the boring logs.

5.0 GEOTECHNICAL ENGINEERING RECOMMENDATIONS

Based on drawings (dated December 18, 2014) provided by KAI, the proposed improvements include: (i) approximately 4,550 linear feet of 24-inch diameter waterline installed primarily along the median of West Bellfort Avenue from Stella Link Road to Buffalo Speedway; (ii) approximately 90 feet of 12 inch diameter waterline on the east side of the intersection of West Bellfort Avenue and US-90A; and (iii) approximately 285 feet of 8 inch diameter waterline along the south right of way of West Bellfort Avenue from approximately Station 41+55 to approximately Station 44+35. The 24 inch diameter waterline will be installed primarily by open cut method, although tunnel method will be used where the waterline crosses beneath Highway US-90A. The 8 and 12 inch diameter waterlines will be installed by trenchless method. The invert depth of the 24 inch diameter waterline along the alignment typically varies from approximately 10 to 11.5 feet, although the invert depth increases to up to 15.5 feet at utility crossings, and from 26.5 to 27.4 feet at the intersection of US-90A.

5.1 Geotechnical Parameters for Underground Utilities

Recommended geotechnical parameters for the subsurface soils along the alignment to be used for design of waterlines are presented on Plates C-1 and C-2, in Appendix C. The design values are based on the results of field and laboratory test data on individual boring logs as well as our experience. It should be noted that because of the variable nature of soil stratigraphy, soil types and properties along the alignment or at locations away from a particular boring may vary substantially.

5.2 Installation of Waterlines by Open-Cut Method

Waterlines installed by open-cut methods should be designed and installed in accordance with Section 02511 of the latest edition of the City of Houston Standard Construction Specifications (COHSCS).

5.2.1 Loadings on Pipes

Underground utilities support the weight of the soil and water above the crown, as well as roadway traffic and any structures that exist above the utilities.

Earth Loads: For underground utilities to be installed using open cut methods, the vertical soil load W_e can be calculated as the larger of the two values from Equations (1) and (3):

$$W_e = C_d \gamma B_d^2 \quad \text{.....Equation (1)}$$

$$C_d = [1 - e^{-2K\mu'(H/B_d)}]/(2K\mu') \quad \text{.....Equation (2)}$$

$$W_e = \gamma B_c H \quad \text{.....Equation (3)}$$

where:
- W_e = trench fill load, in pounds per linear foot (lb/ft);
- C_d = trench load coefficient, see Plate C-3, in Appendix C;
- γ = effective unit weight of soil over the conduit, in pounds per cubic foot (pcf);
- B_d = trench width at top of the conduit < 1.5 B_c (ft);
- B_c = outside diameter of the conduit (ft);
- H = variable height of fill (ft); when the height of fill above the top of the conduit H_c >2 B_d, $H = H_h$ (height of fill above the middle of the conduit). When H_c < 2 B_d, H varies over the height of the conduit; and
- $K\mu'$ = 0.1650 maximum for sand and gravel, 0.1500 maximum for saturated top soil, 0.1300 maximum for ordinary clay, 0.1100 maximum for saturated clay.

When underground conduits are located below groundwater, the total vertical dead loads should include the weight of the projected volume of water above the conduits.

Traffic Loads: The vertical stress on top of an underground conduit, p_L (psf), resulting from traffic loads (from a HS-20 truck) can be obtained from Plate C-4, in Appendix C. The live load on top of the underground conduit can be calculated from Equation (4):

$$W_L = p_L B_c \quad \text{.....Equation (4)}$$

where:
- W_L = live load on the top of the conduit (lb/ft);
- p_L = vertical stress (on the top of the conduit) resulting from traffic loads (psf);
- B_c = outside diameter of the conduit, (ft);

Lateral Loads: The lateral soil pressure p_l can be calculated from Equation (5); hydrostatic pressure should be added, if applicable.

$$p_l = 0.5\,(\gamma H_h + p_s) \qquad \text{.....Equation (5)}$$

where: H_h = height of fill above the center of the conduit (ft);
γ = effective unit weight of soil over the conduit (pcf);
p_s = vertical pressure on conduit resulting from traffic and/or construction equipment (psf).

5.2.2 Trench Stability

Cohesive soils in the Houston area contain many secondary features which affect trench stability, including sand seams and slickensides. Slickensides are shiny weak failure planes which are commonly present in fat clays; such clays often fail along these weak planes when they are not laterally supported, such as in an open excavation. The Contractor should not assume that slickensides and sand seams/layers/pockets are absent where not indicated on the logs.

The Contractor should be responsible for designing, constructing and maintaining safe excavations. The excavations should not cause any distress to existing structures.

Trenches 20 feet and Deeper: Occupational Safety and Health Administration (OSHA) requires that shoring or bracing for trenches 20 feet and deeper be specifically designed by a licensed professional engineer.

Trenches Less than 20 Feet Deep: Trench excavations that are less than 20 feet deep may be shored, sheeted and braced, or laid back to a stable slope for the safety of workers, the general public, and adjacent structures, except for excavations which are less than 5 feet deep and verified by a competent person to have no cave-in potential. The excavation and trenching should be in accordance with OSHA Safety and Health Regulations, 29 CFR, Part 1926. Recommended OSHA soil types for trench design for existing soils can be found on Plates C-1 and C-2, in Appendix C. Fill soils are considered OSHA Class 'C'; submerged cohesive soils should also be considered OSHA Class 'C', unless they are dewatered first.

Critical Height is defined as the height a slope will stand unsupported for a short time; in cohesive soils, it is used to estimate the maximum depth of open-cuts at given side slopes. Critical Height may be calculated based on the soil cohesion. Values for various slopes and cohesion are shown on Plate D-1, in Appendix D. Cautions listed below should be exercised in use of Critical Height applications:

1. No more than 50 percent of the Critical Height computed should be used for vertical slopes. Unsupported vertical slopes are not recommended where granular soils or soils that will slough when not laterally supported are encountered within the excavation depth.

2. If the soil at the surface is dry to the point where tension cracks occur, any water in the crack will increase the lateral pressure considerably. In addition, if tension cracks occur, no cohesion should be assumed for the soils within the depth of the crack. The depth of the first waler should not exceed the depth of the potential tension crack. Struts should be installed before lateral displacement occurs.

3. Shoring should be provided for excavations where limited space precludes adequate side slopes, e.g., where granular soils will not stand on stable slopes and/or for deep open cuts.

4. All excavation, trenching and shoring should be designed and constructed by qualified professionals in accordance with OSHA requirements.

The maximum (steepest) allowable slopes for OSHA Soil Types for excavations less than 20 feet are presented on Plate D-2, in Appendix D.

If limited space is available for the required open trench side slopes, the space required for the slope can be reduced by using a combination of bracing and open cut as illustrated on Plate D-3, in Appendix D. Guidelines for bracing and calculating bracing stress are presented below.

<u>Computation of Bracing Pressures:</u> The following method can be used for calculating earth pressure against bracing for open cuts. Lateral pressure resulting from construction equipment, traffic loads, or other surcharge should be taken into account by adding the equivalent uniformly distributed surcharge to the design lateral pressure. Hydrostatic pressure, if any, should also be considered. The active earth pressure at depth z can be determined by Equation (6). The design soil parameters for trench bracing design are presented on Plates C-1 and C-2, in Appendix C.

$$p_a = (q_s + \gamma h_1 + \gamma' h_2) K_a - 2c\sqrt{K_a} + \gamma_w h_2 \qquad \text{.....Equation (6)}$$

where:
- p_a = active earth pressure (psf);
- q_s = uniform surcharge pressure (psf);
- γ, γ' = wet unit weight and buoyant unit weight of soil (pcf);
- h_1 = depth from ground surface to groundwater table (ft);
- h_2 = $z-h_1$, depth from groundwater table to the point under consideration (ft);
- z = depth below ground surface for the point under consideration (ft);

K_a = coefficient of active earth pressure;
c = cohesion of clayey soils (psf); c can be omitted conservatively;
γ_w = unit weight of water, 62.4 pcf.

Pressure distribution for the practical design of struts in open cuts for clays and sands are illustrated on Plates D-4 through D-6, in Appendix D.

Bottom Stability: In open-cuts, it is necessary to consider the possibility of the bottom failing by heaving, due to the removal of the weight of excavated soil. Heaving typically occurs in soft plastic clays when the excavation depth is sufficiently deep enough to cause the surrounding soil to displace vertically due to bearing capacity failure of the soil beneath the excavation bottom, with a corresponding upward movement of the soils in the bottom of the excavation. In fat and lean clays, heave normally does not occur unless the ratio of Critical Height to Depth of Cut approaches one. In very sandy and silty lean clays and granular soils, heave can occur if an artificially large head of water is created due to installation of impervious sheeting while bracing the cut. This can be mitigated if groundwater is lowered below the excavation by dewatering the area. Guidelines for evaluating bottom stability in clay soils are presented on Plate D-7, in Appendix D.

Based on the invert depths presented on Table 1 in Section 2.1 of this report and the depth to granular soils presented on Table 3 in Section 4.1 of this report, AEC does not anticipate that open cut excavations will encounter granular soils or groundwater within the trench or pipe bedding zone. However, if the excavation extends below groundwater and the soils at or near the bottom of the excavation are mainly sands or silts, the bottom can fail by blow-out (boiling) when a sufficient hydraulic head exists. The potential for boiling or in-flow of granular soils increases where the groundwater is pressurized. To reduce the potential for boiling of excavations terminating in granular soils below pressurized groundwater, the groundwater table should be lowered at least 5 feet below the excavation in accordance with Section 01578 of the latest edition of the City of Houston Standard General Requirement (COHSGR).

Calcareous nodules, silt/sand seams, and fat clays with slickensides were encountered in some of the borings. These secondary structures may become sources of localized instability when they are exposed during excavation, especially when they become saturated. Such soils have a tendency to slough or cave in when not laterally confined, such as in trench excavations. The Contractor should be aware of the potential for cave-in of the soils. Low plasticity soils (silts and clayey silts) will lose strength and may behave like

granular soils when saturated.

5.2.3 Thrust Force Design Recommendations

Thrust forces are generated in pressure pipes, typically as a result of changes in pipe diameter, pipe direction or at the termination point of the pipes. The pipes could disengage at the joints if the forces are not balanced and if the pipe restraint is not adequate. Various methods of thrust restraint are used including thrust blocks, restrained joints, encasement, and tie-rods.

Thrust restraint design procedure based on the 2008 American Water Works Association (AWWA) Manuals "Pressurized Concrete Pipe (M9)" and "Steel Water Pipe (M11)" is discussed below. Plate D-8, in Appendix D shows the force diagram generated by flow in a bend in a pipe and also gives the equation for computing the thrust force. An example computation of a thrust force for a given surge pressure and a bend angle is presented on Plate D-9, in Appendix D.

Frictional Resistance: The unbalanced force due to changes in grade and alignment can be resisted by frictional force F_R, between the pipe and the surrounding soil. The resisting frictional force per linear foot of pipe against soil can be calculated from Equation (7):

$$F_R = f\,(2W_e + W_w + W_p) \qquad \text{.....Equation (7)}$$

where: f = Coefficient of friction between pipe and soil;
W_e = Weight of soil over pipe (lb/ft);
W_w = Weight of water inside the pipe (lb/ft);
W_p = Weight of pipe (lb/ft).

The value of the frictional resistance depends on the material in contact with the backfill and the soil used in the backfill. For a ductile iron pipe or steel pipe with crushed stone or compacted sand backfill, an allowable coefficient of friction of 0.3 can be used. To account for submerged conditions, a soil unit weight of 60 pcf should be used to compute the weight of compacted backfill on the pipe.

Thrust Blocks: Thrust blocks utilize passive earth pressures to resist forces generated by changes in direction or diameter of pressurized pipes. Passive earth pressure can be calculated using Equation (8); we

recommend that a factor safety of 2.0 be used when using passive earth pressure for design of thrust blocks. The design soil parameters for thrust block design are presented on Plates C-1 and C-2, in Appendix C. Design parameters for bearing thrust blocks are presented on Plate D-10, in Appendix D.

$$p_p = \gamma z K_p + 2c(K_p)^{1/2} \qquad \text{.....Equation (8)}$$

where, p_p = passive earth pressure (psf);
γ = wet unit weight of soil (pcf);
z = depth below ground surface for the point under consideration (ft);
K_p = coefficient of passive earth pressure;
c = cohesion of clayey soils (psf).

5.2.4 Bedding and Backfill

Trench excavation, pipe embedment material, and backfill for the proposed waterlines should be in general accordance with Section 02317 of the latest edition of the COHSCS.

5.3 Installation of Waterlines by Trenchless Method

8 to 12 inch diameter waterlines installed by trenchless methods should be designed and installed in accordance with Section 02447 of the latest edition of the COHSCS.

The Contractor is responsible for selecting, designing, installing, maintaining and monitoring safe trenchless systems and retaining professionals who are qualified and experienced to perform the tasks and who are capable of modifying the system, as required. The following discussion provides general guidelines to the Contractor for augering methods. The information in this report should be reviewed so that appropriate augering equipment and techniques can be planned and factored into the construction plan and cost estimate.

5.3.1 Loadings on Pipes

Determination of loadings on pipes is presented in Section 5.2.1 of this report.

5.3.2 Auger Pits

Auger pits are required for starting and ending pipes. They should be designed and constructed in accordance with Section 02447, Subsection 3.04 of the latest edition of the COHSCS. Auger pits that are constructed in conjunction with open cut methods should be in accordance with Section 02317 of the latest edition of the COHSCS.

Reaction Walls: For the braced pit walls to be used to provide passive reaction for pipe jacking, passive earth pressure can be calculated using Equation (8) in Section 5.2.3 of this report; we recommend that a factor of safety of 2.0 be used for passive earth pressure. The design soil parameters for reaction wall design are presented on Plates C-1 and C-2, in Appendix C.

5.3.3 Auger Pit Excavation

Based on Table 1 in Section 2.1 of this report, invert depths of the small diameter waterlines typically varies from 4.7 to 5.0 feet in the vicinity of Borings B-1 and B-2. Based on the invert depths and Table 3 in Section 4.1 of this report, AEC does not anticipate that granular soils will be encountered within the proposed auger pit excavations. Based on Table 4 in Section 4.1 of this report, AEC does not anticipate that groundwater will be encountered in the auger pit excavations. However, if groundwater or saturated sands are encountered during auger pit excavation, groundwater control could be required. Groundwater control recommendations are presented in Section 6.2 of this report.

Recommendations for auger pit excavation, shoring, critical height, and bottom stability are presented in Section 5.2.2 of this report.

5.3.4 Auger Face Stability During Construction

A Stability Factor, $N_t = (P_z - P_a)/C_u$ may be used to evaluate the stability of an unsupported bore face in cohesive soils (N_t is not applicable to granular soils), where P_z is the overburden pressure to the bore centerline; P_a is the equivalent uniform interior pressure applied to the face; and C_u is the soil undrained shear strength. For augering operations, no interior pressure is applied. Generally, N_t values of 4 or less are desirable as it represents a practical limit below which augering may be accomplished without significant

difficulty. Higher N_t values usually lead to large deformations of the soil around the bore and problems associated with increased subsidence. It should be noted that the exposure time of the face is most important; with time, creep of the soil will occur, resulting in a reduction of shear strength. The N_t values will therefore increase when construction is slow.

An N_t value of about 0.15 to 0.45 was estimated for the cohesive soils encountered within the auger zone of approximately 4.7 to 5.0 feet below existing grade for Borings B-1 and B-2. Note that the cohesive soils have secondary structures such as fissures, sand seams, and sand lenses which can cause the bore face to become unstable. Where granular or soft cohesive soils are encountered, the Contractor should make provisions for casing to stabilize the auger holes. The Contractor should not base their bid on the above information alone, since granular soils may be encountered between boring locations; the Contractor should verify the subsurface conditions between boring locations or add a contingency.

5.3.5 Backfill for Auger Pits

Backfill for auger pits should be in accordance with Section 02317 of the latest edition of the COHSCS.

5.3.6 Influence of Augering on Adjacent Structures

Ground Subsidence: Augering in soft ground often induces some degree of settlement (ground subsidence) of the overlying ground surface. If such settlement is excessive, it may cause damage to existing structures and services located above and/or near the auger zone.

Predicting the amount of loss of ground (or ground subsidence) due to augering is very difficult, primarily because of the uncertainty involved in the analysis: such as heterogeneous soil properties, subsurface variability, or lack of information about proposed construction equipment and techniques.

Loss of Soil Support for Adjoining Structures: Augering operations, when located close to existing structures, will relieve the vertical and lateral soil support that these structures rely upon for their foundation bearing capacity and lateral soil support. This can result in distress to the existing structures if appropriate precautions are not taken.

Measures to Reduce Distress from Augering: Impact to existing foundations and structures can be mitigated by following proper augering procedures. Some methods to mitigate movement and/or distress to existing structures include:

- Supporting the augering excavation with steel or rigid concrete casing or the pipe material itself, as soon as the excavation is advanced and at short intervals; and
- proper grouting of the annular spaces; the type of equipment and method chosen will require the services of a specialty contractor.

To reduce the potential for the augering to influence the existing foundations or structures, we recommend that the outer edge of the influence zone of the auger tunnel be a minimum of 5 feet from the outer edge of the bearing (stress) zone of existing foundations. The bearing (stress) zone is defined by a line drawn downward from the outer edge of an existing foundation and inclined at an angle of 45 degrees to the vertical.

The auger influence zone is assumed to extend a distance of about 2.5i from the center of the auger tunnel, as shown on Plate D-11, in Appendix D. We estimated the resulting influence zones (extending from the centerline of the auger tunnel) to be approximately 3 to 5 feet (depending on invert depths ranging from 4.7 to 5.0 feet below grade). We emphasize that the size of the influence zone of an auger tunnel is difficult to determine because several factors influence the response of the soil to augering operations including type of soil, ground water level, type of augering equipment, method of augering, experience of operator and other construction in the vicinity. The values of auger tunnel influence zone presented herein are therefore rough estimates.

We recommend that the following situations be evaluated on a case by case basis, where:

- augering cannot be located farther than the minimum distance recommended above;
- augering cannot be located outside the stress zone of the foundations for existing structures;
- unstable soils are encountered near existing structures;
- heavily loaded or critical structures are located close to the influence zone of the auger tunnels;

As an option, existing structure foundations should be protected by adequate shoring or strengthened by underpinning or other techniques, provided that augering cannot be located outside the stress zone of the existing foundations.

Disturbance and loss of ground from the augering operation may create surface soil disturbance and subsidence which in turn may cause distress to existing structures (including pavements) located in the zone of soil disturbance. Any open-cut excavation in the proposed augering areas should be adequately shored.

5.4 Tunneling and Its Influence on Adjacent Structures

The Contractor is responsible for designing, constructing, implementing, and monitoring safe tunneling excavation and protecting existing structures in the vicinity from adverse effects resulting from construction, and retaining professionals who are qualified and experienced to perform the tasks and who are capable of modifying the system, as required. The following discussion provides general guidelines to the Contractor.

Based on the plan and profile drawings provided by KAI (dated December 18, 2014), the proposed 24 inch diameter waterline will be installed by tunnel method where the alignment crosses beneath US-90A; the alignment stations, approximate tunnel invert depths, and possible subsurface conditions are summarized in Table 5 below.

Table 5. Subsurface Conditions in Borings within Tunnel Zones

Soil Boring	Station	Tunnel Segment	Tunnel Invert Depth (ft)	Soil Types Encountered within Tunnel Zone	Ground Water Depth below Existing Ground Surface (ft)	
					Boring	In Piezometer
B-2	33+66	US-90A	26.5	18.5' - 28': Very stiff to hard Fat Clay w/Sand (CH) 28' - 30.0': Hard Lean Clay (CL), with abundant silt seams 30.0' - 32.0': Hard Fat Clay (CH), with slickensides	29 (Drilling) 23.8 (15 Min.)	-
B-3	30+04		27.4	19.5' - 24': Very stiff Silty Clay (CL-ML) 24' - 26': Medium dense Silty Sand (SM) 26' - 29': Hard Fat Clay (CH), with slickensides 29' - 33.5' Very stiff Sandy Lean Clay (CL), with silt partings	24 (Drilling) 17.0 (15 Min.)	14.5 (9/3/14) 13.3 (10/3/14)

Tunneling operations and placement of pipe inside tunnel constructed with primary liner should comply with Sections 02425 (LD) and 02517 of the latest edition of the COHSCS.

Loadings on Pipes: Recommendations for computation of loadings on pipes from HS-20 trucks are presented in Section 5.2.1 of this report.

5.4.1 Tunnel Access Shafts

Tunnel access shafts should be constructed in accordance with Section 02400 of the latest edition of the COHSCS. Based on Table 5, the tunnel access shafts on the west end of the US-90A tunnel (at Boring B-3) will encounter silty clay and water-bearing sand, and the tunnel shaft on the east end of the US-90A tunnel (at Boring B-2) will encounter fat clay and groundwater. Since the access shafts (especially on the west end of the tunnel) will most likely extend into water-bearing sand/silt, the access shaft walls can be supported by internally-braced, water-tight steel sheet piles.

AEC anticipates ground water control will be required for the tunnel shafts. Possible ground water control measures includes: (i) deep wells with turbine or submersible pumps; (ii) educators (for silt); (iii) water-tight sheet pile cut-off walls; or (iv) jet-grouting of sandy soils in the immediate surrounding area. Generally, the groundwater depth should be lowered at least 5 feet below the excavation bottom (in accordance with Section 01578 of the latest edition of the COHSGR) to be able to work on a firm surface when water-bearing granular soils are encountered. If deep wells are used to dewater the excavation, extended and/or excessive dewatering can result in settlement of existing structures in the vicinity. One option to reduce the risk of settlement in these cases includes installing a series of reinjection wells around the perimeter of the construction area. General groundwater control recommendations are presented in Section 6.2 of this report. The options for dewatering presented here are for reference purposes only; it is the Contractor's responsibility to take the necessary precautions to minimize the effect on existing structures in the vicinity of the dewatering operation.

Sheet Piling: Design soil parameters for sheet pile design are presented on Plates C-1 and C-2, in Appendix C. AEC recommends that the sheet pile design consider both short-term and long-term parameters; whichever is critical should be used for design. The determination of the pressures exerted on the sheet piles by the retained soils shall consider active earth pressure, hydrostatic pressure, and uniform surcharge

(including construction equipment, soil stockpiles, and traffic load, whichever surcharge is more critical).

Sheet pile design should be based on the following considerations:

(1) Ground water elevation at the top of the ground surface on the retained side;
(2) Ground water elevation 5 feet below the bottom of the access shaft excavation (assuming dewatering operations using deep wells);
(3) Neglect cohesion for active pressure determination, Equation (6) in Section 5.2.2 of this report;
(4) The design retained height should extend from the ground surface to the water line tunnel invert depth;
(5) A 300 psf uniform surcharge pressure from construction equipment or soil stockpiles should be considered at the top of the sheet piles; loose soil stockpiles during access shaft construction should be limited to 3 foot high or less;
(6) Use a Factor of Safety of 2.0 for passive earth pressure in front of (i.e. the shaft side) the sheet piles.

Design, construction, and monitoring of sheet piles should be performed by qualified personnel who are experienced in this operation. Sheet piles should be driven in pairs, and proper construction controls provided to maintain alignment along the wall and prevent outward leaning of the sheet piles.

Bottom Stability: Recommendations for evaluating tunnel access shaft bottom stability are presented in Section 5.2.2 of this report.

Reaction Walls: Reaction walls (if used) will be part of the tunnel shaft walls; they will be rigid structures and support tunneling operations by mobilizing passive pressures of the soils behind the walls. The passive earth pressure can be calculated using Equation (8) in Section 5.2.3 of this report; we recommend that a factor of safety of 2.0 be used for passive earth pressure. The design soil parameters are presented on Plates C-1 and C-2 in Appendix C.

Due to subsurface variations, soils with different strengths and characteristics will likely be encountered at a given location. The soil resulting in the lowest passive pressure should be used for design of the walls. The soil conditions should be checked by geotechnical personnel to confirm the recommended soil parameters.

5.4.2 Tunnel Face Stability during Construction

5.4.2.1 General

The stability of a tunnel face is governed primarily by ground water and subsurface soil conditions, type of tunnel machine used, and workmanship. Based on the subsurface conditions encountered in our borings and the proposed invert depths (see Table 5 in Section 5.4 of this report), we anticipate that: (i) very stiff to hard fat clay (CH) will generally be encountered at the tunneling zone along the alignment near Boring B-2; and (ii) very stiff silty clay (CL-ML) and water-bearing medium dense silty sand (SM) will generally be encountered at the tunneling zone along the alignment near Boring B-3. Secondary features such as sand or silt partings/seams/pockets/layers were also encountered within the cohesive soils, and could be significant at some locations. In addition, the type and property of subsurface soils are subject to change between borings, and may be different at locations away from our borings.

When granular soils are encountered during construction the tunnel face can become unstable. Granular soils below ground water will tend to flow into the excavation hole; granular soils above the ground water level will generally not stand unsupported but will tend to ravel until a stable slope is formed at the face with a slope equal to the angle of repose of the material in a loose state. Thus, granular soils are generally considered unstable in an unsupported excavation face; uncontrolled flowing soil can result in large loss of ground.

5.4.2.2 Anticipated Ground Behavior

Tunnel face stability is described in Section 5.4.2 of this report. The N_t values estimated for the cohesive soils encountered above the tunnel is presented in Table 6. N_t was not able to be determined for Boring B-3 due to the presence of granular soils. We also estimated the maximum settlements [caused by volume loss if a Tunnel Boring Machine (TBM) is NOT used] at the proposed tunnel location and the results are included in Table 6.

Table 6. Tunnel Face Stability Factor and Estimated Settlements along Tunnel Alignment

Soil Boring/ Station	Tunnel Segment	Tunnel Invert Depth (ft)	Anticipated Soil Types in Tunnel Zone	Stability Factor N_t	S_{max} (in)	Note/Suggestion
B-2	US-90A	26.5	Very stiff to hard Fat Clay Clay (CH)	1.1	0.05	Potential swelling ground due to very high plasticity CH
B-3		27.4	Very stiff Silty Clay (CL-ML) and water-bearing, medium dense Silty Sand (SM)	n/a	0.13	Mixed ground conditions under water, suggest using TBM

Note: S_{max} = Estimated settlement along the tunnel alignment due to volume loss if slurry face machine (SFM) or EPB are not used; not including consolidation settlement.

Based on Table 6, it should be noted that the estimated settlement at Boring B-3's location is approximately 0.13 inch (which does not include consolidation settlement) or more, and dewatering at Boring B-3's location will also cause additional settlement due to increases in effective stress of the soil strata. The information in this report should be reviewed so that appropriate tunneling equipment and operation can be planned and factored into the construction plan and cost estimate. If the estimated settlement is too high, we suggest that the tunnel construction consider the use of: (i) a TBM; (ii) jet grout to stabilize the saturated granular soils; or (iii) micro-tunneling. The choice of tunneling machine should be selected by the Contractor. Plate D-12 in Appendix D provides a general guideline for TBM selection. Tunnel construction should be in accordance with Section 02425 (LD) of the latest edition of the COHSCS.

5.4.2.3 Influence of Tunneling on Existing Structures

We estimated the resulting influence zones (extending from the centerline of the tunnel) to range from approximately 11 to 12 feet at Borings B-2 and B-3; although the values of tunnel influence zone presented are rough estimates. The estimated maximum settlements [caused by volume loss if a TBM is not used] along the tunnel alignment at the proposed tunnel locations are included in Table 6.

AEC emphasizes that the size of the influence zone of a tunnel is difficult to determine because several factors influence the response of the soil to tunneling operations including type of soil, ground water level and control method, type of tunneling equipment, tunneling operations, experience of operator, and other construction in the vicinity. Methods to prevent movement and/or distress to existing structures will require the services of a specialty contractor.

5.4.3 Measures to Reduce Distress from Tunneling

To control tunneling face loss and reduce potential impact on existing foundations and structures, AEC recommends the use of a steel casing (or equivalent methods) to support the tunnel excavation during tunnel construction. Considering the ground conditions discussed in Table 6, AEC recommends that the following tunneling operations be considered: (i) use a pressurized slurry TBM and keep the pressure at least equal to if not greater than the combined soil and groundwater pressure in the ground at the tunnel level; and (ii) if excessive voids occur during tunneling, the contractor should immediately and completely grout the annular space between the steel casing and the ground at the tail of the machine, in accordance with Section 02431 of the latest edition of the COHSCS. It should be noted that grouting may increase friction resistance while advancing the casing and the contractor will need to address this condition as part of his tunnel work plan. Plate D-13, in Appendix D provides a general guideline for selection of grouting material. The tunneling machine selection, tunneling operation, and grouting (as necessary) will be the full responsibility of the Contractor.

To reduce the potential for the tunneling to influence existing foundations or structures, we recommend that the outer edge of the influence zone of the tunnel be a minimum of 5 feet from the outer edge of the bearing (stress) zone of existing foundations. The bearing (stress) zone is defined by a line drawn downward from the outer edge of an existing foundation and inclined at an angle of 45 degrees to the vertical.

We recommend that the following situations be evaluated on a case by case basis, where:

- tunneling cannot be located farther than the minimum distance recommended above;
- tunneling cannot be located outside the stress zone of the foundations for existing structures;
- unstable soils are encountered near existing structures;
- heavily loaded or critical structures are located close to the influence zone of the tunnels;

As an option, existing structure foundations should be protected by adequate shoring or strengthened by underpinning or other techniques, provided that tunneling cannot be located outside the stress zone of the existing foundations.

Disturbance and loss of ground from the tunneling operation may create surface soil disturbance and subsidence which in turn may cause distress to existing structures (including underground utilities and

pavements) located in the zone of soil disturbance. Any open-cut excavation in the proposed tunneling areas should be adequately shored.

5.4.4 Monitoring Existing Structures

The Contractor should be responsible for monitoring existing structures nearby and taking necessary action to mitigate impact to adjacent structures. Existing structures located close to the proposed construction excavations should be surveyed prior to construction and pre-existing conditions of such structures and their vicinity be adequately recorded. This can be accomplished by conducting a pre-construction survey, taking photographs and/or video, and documenting existing elevations, cracks, settlements, and other existing distress in the structures. The monitoring should include establishment of elevation monitor stations, crack gauges, and inclinometers, as required. The monitoring should be performed before, periodically during, and after construction. The data should be reviewed by qualified engineers in a timely manner to evaluate the impact on existing structures and develop plans to mitigate the impact, should it be necessary.

5.5 Pavement Reconstruction

Based on drawings provided by KAI, portions of the existing concrete roadway along West Bellfort Avenue will be reconstructed whenever the waterline trench is adjacent to or within the pavement limits. Only the traffic lane adjacent to where the waterline trench excavations are located will be replaced. Based on the profile drawings, the new pavement will be placed at or near existing grade.

Existing drawings provided by KAI indicate that West Bellfort from Stella Link to US-90A is paved with 9 inches of concrete (drawings prepared by Pate Engineers, dated January 2007) and that West Bellfort from US-90A to Buffalo Speedway is paved with 10 inches of concrete (drawings prepared by KAI, dated March 2009). Based on the provided drawings, since only one lane of West Bellfort will be reconstructed, AEC recommends that the pavement thickness of the reconstructed lane match the thickness shown on the original drawings, or the thickness of the existing roadway, whichever is greater.

The pavement design recommendations developed below are in accordance with the "AASHTO Guide for Design of Pavement Structures," 1993 edition.

5.5.1 Rigid Pavement

Rigid pavement design is based on the anticipated design number of 18-kip ESALs the pavement is subjected to during its design life. The parameters that were used in computing the rigid pavement section are as follows:

Overall Standard Deviation (S_0)	0.35
Initial Serviceability (P_0)	4.5
Terminal Serviceability (P_t)	2.0
Reliability Level (R)	95%
Overall Drainage Coefficient (C_d)	1.2 (curb and gutter)
Load Transfer Coefficient (J)	3.2
Loss of Support Category (LS)	1.2
Roadbed Soil Resilient Modulus (M_R)	4,500 psi
Elastic Modulus (E_{sb}) of Stabilized Soils	20,000 psi
Composite Effective Modulus of Subgrade Reaction (k)	91 pci
Mean Concrete Modulus of Rupture (S'_c)	600 psi (at 28 days)
Concrete Elastic Modulus (E_c)	3.37 x 10^6 psi

Table 7. Recommended Rigid Pavement Section for West Bellfort

Pavement Layer	From Stella Link to US-90A	From US-90A to Buffalo Speedway
Portland Cement Concrete	9*	10*
Lime-stabilized Subgrade	8	8

Note: (*) i.e. matching original design pavement thickness, as indicated on drawings provided to AEC.

AEC used the DARWin v3.0 computer program to perform rigid pavement design. Given the above design parameters, the 9 and 10 inch thick concrete pavement sections should sustain 6,055,245 and 11,929,423 repetitions of 18-kip ESALs, respectively. Outputs from the DARWin program are presented on Plates E-1 and E-2, in Appendix E. The design engineer should verify whether the proposed pavement section will provide enough ESALs for the anticipated amount of site traffic. AEC should be notified if different standards or constants are required for pavement design at the site, so that our recommendations can be updated accordingly.

Concrete Pavement: Portland Cement Concrete (PCC) pavement should be constructed in accordance with Section 02751 of the latest edition of the COHSCS. According to Section 02751, concrete mix design has a required flexural strength of 600 psi at 28 days and field testing shall confirm a minimum concrete

compressive strength of 3,500 psi at 28 days. The Contractor shall be responsible for ensuring that a concrete mix design based on concrete compressive strength of 3,500 psi at 28 days also meets a minimum concrete flexural strength of 500 psi at 7 days and 600 psi at 28 days.

5.5.2 Reinforcing Steel

Reinforcing steel should be in accordance with Section 02751 of the latest edition of the COHSCS. Reinforcing steel is required to control pavement cracks, deflections across pavement joints and resist warping stresses in rigid pavements. The cross-sectional area of steel (A_s) required per foot of slab width can be calculated as follows (for both longitudinal and transverse steel).

$$A_s = FLW/(2f_s) \qquad \text{.....Equation (9)}$$

where:
- A_s = Required cross-sectional area of reinforcing steel per foot width of pavement, in^2
- F = Coefficient of resistance between slab and subgrade, F = 1.8 for stabilized soil
- L = Distance between free transverse joints or between free longitudinal edges, ft.
- W = Weight of pavement slab per foot of width, lbs/ft
- f_s = Allowable working stress in steel, 0.75 x (yield strength), psi
  i.e. f_s = 45,000 psi for Grade 60 steel.

5.5.3 Pavement Subgrade Preparation

Roadway grading and fill should be performed in general accordance with Section 02315 of the latest edition of the COHSCS. Existing pavement should be demolished in accordance with Section 02221 of the latest edition of the COHSCS. Where possible, subgrade preparation should extend a minimum of 2 feet beyond the paved area perimeters. After demolition of existing pavement, we recommend that a competent soil technician inspect the exposed subgrade to determine if there are any unsuitable soils or other deleterious materials. Excavate and dispose of unsuitable soils and other deleterious materials which will not consolidate; the excavation depth should be increased when inspection indicates the presence of organics and deleterious materials to greater depths. Unsuitable soil is defined in Section 02319 of the latest edition of the COHSCS. The exposed soils should be proof-rolled (see below) to identify and remove any weak, compressible, or other unsuitable materials; such over-excavations should be backfilled in general accordance with Section 02315 of the latest edition of the COHSCS. Proof rolling should be performed with a pneumatic tire roller (or using equivalent compaction equipment), with a loaded weight between 25 and 50 tons. At least two coverages should be made with the proof-roller, and offset each trip

of the roller by at most 1 tire width. Rollers should make passes at a speed between 2 and 6 miles per hour.

Scarify areas to be filled to a depth of 4 inches to bond existing and new materials, and then mix with the first fill layer in accordance with Section 02315 of the latest edition of the COHSCS. Cut and pulverize material to bottom of subgrade, then stabilize the subgrade with at least 6 percent hydrated lime by dry soil weight. Lime stabilization shall be performed in accordance with Section 02336 of the latest edition of the COHSCS. The percentage of lime required for stabilization is a preliminary estimate for planning purposes only; laboratory testing should be performed to determine optimum contents for stabilization prior to construction. The stabilized soils should be compacted to 95 percent of their ASTM D 698 (Standard Proctor) dry density at a moisture content ranging from optimum to 3 percent above optimum.

6.0 CONSTRUCTION CONSIDERATIONS

6.1 Site Preparation

To mitigate site problems that may develop following prolonged periods of rainfall, it is essential to have adequate drainage to maintain a relatively dry and firm surface prior to starting any work at the site. Adequate drainage should be maintained throughout the construction period. Methods for controlling surface runoff and ponding include proper site grading, berm construction around exposed areas, and installation of sump pits with pumps.

6.2 Groundwater Control

The need for groundwater control will depend on the depth of excavation relative to the groundwater depth at the time of construction. In the event that there is heavy rain prior to or during construction, the groundwater table may be higher than indicated in this report; higher seepage is also likely and may require a more extensive groundwater control program. In addition, groundwater may be pressurized in certain areas of the alignment, requiring further evaluation and consideration of the excess hydrostatic pressures. Groundwater control should be in general accordance with Section 01578 of the latest edition of the COHSGR.

The Contractor should be responsible for selecting, designing, constructing, maintaining, and monitoring a groundwater control system and adapt his operations to ensure the stability of the excavations. Groundwater information presented in Section 4.1 and elsewhere in this report, along with consideration for potential environmental and site variation between the time of our field exploration and construction, should be incorporated in evaluating groundwater depths. The following recommendations are intended to guide the Contractor during design and construction of the dewatering system.

In cohesive soils seepage rates are lower than in granular soils and groundwater is usually collected in sumps and channeled by gravity flow to storm sewers. If cohesive soils contain significant secondary features, seepage rates will be higher. This may require larger sumps and drainage channels, or if significant granular layers are interbedded within the cohesive soils, methods used for granular soils may be required. Where it is present, pressurized groundwater will also yield higher seepage rates.

Groundwater for excavations within saturated sands can be controlled by the installation of wellpoints. The practical maximum dewatering depth for well points is about 15 feet. When groundwater control is required below 15 feet, possible ground water control measures include: (i) deep wells with turbine or submersible pumps; (ii) multi-staged well points; or (iii) water-tight sheet pile cut-off walls. Generally, the groundwater depth should be lowered at least 5 feet below the excavation bottom (in accordance with Section 01578 of the latest edition of the COHSGR) to be able to work on a firm surface when water-bearing granular soils are encountered.

Extended and/or excessive dewatering can result in settlement of existing structures in the vicinity; the Contractor should take the necessary precautions to minimize the effect on existing structures in the vicinity of the dewatering operation. We recommend that the Contractor verify the groundwater depths and seepage rates prior to and during construction and retain the services of a dewatering expert (if necessary) to assist him in identifying, implementing, and monitoring the most suitable and cost-effective method of controlling groundwater.

For open cut construction in cohesive soils, the possibility of bottom heave must be considered due to the removal of the weight of excavated soil. In lean and fat clays, heave normally does not occur unless the ratio of Critical Height to Depth of Cut approaches one. In silty clays, heave does not typically occur

unless an artificially large head of water is created through the use of impervious sheeting in bracing the cut. Guidelines for evaluating bottom stability are presented in Section 5.2.2 of this report.

6.3 Construction Monitoring

Pavement construction and subgrade preparation, as well as excavation, bedding, and backfilling of underground utilities should be monitored by qualified geotechnical professionals to check for compliance with project documents and changed conditions, if encountered. AEC should be allowed to review the design and construction plans and specifications prior to release to check that the geotechnical recommendations and design criteria presented herein are properly interpreted.

6.4 Monitoring of Existing Structures

Existing structures in the vicinity of the proposed alignment should be closely monitored prior to, during, and for a period after excavation. Several factors (including soil type and stratification, construction methods, weather conditions, other construction in the vicinity, construction personnel experience and supervision) may impact ground movement in the vicinity of the alignment. We therefore recommend that the Contractor be required to survey and adequately document the condition of existing structures in the vicinity of the proposed alignments.

7.0 LIMITATIONS

The information contained in this report summarizes conditions found on the dates the borings were drilled. The attached boring logs are true representations of the soils encountered at the specific boring locations on the dates of drilling. Reasonable variations from the subsurface information presented in this report should be anticipated. If conditions encountered during construction are significantly different from those presented in this report; AEC should be notified immediately.

This investigation was performed using the standard level of care and diligence normally practiced by recognized geotechnical engineering firms in this area, presently performing similar services under similar circumstances. This report is intended to be used in its entirety. The report has been prepared exclusively for the project and location described in this report. If pertinent project details change or otherwise differ from those described herein, AEC should be notified immediately and retained to evaluate the effect of the

changes on the recommendations presented in this report, and revise the recommendations if necessary. The recommendations presented in this report should not be used for other structures located along these alignments or similar structures located elsewhere, without additional evaluation and/or investigation.

AVILES ENGINEERING CORP.

APPENDIX A

Plate A-1	Vicinity Map
Plate A-2	Boring Location Plan
Plates A-3 to A-7	Boring Logs
Plate A-8	Key to Symbols
Plate A-9	Classification of Soils for Engineering Purposes
Plate A-10	Terms Used on Boring Logs
Plate A-11	ASTM & TXDOT Designation for Soil Laboratory Tests
Plates A-12 to A-14	Summary of Lab Data

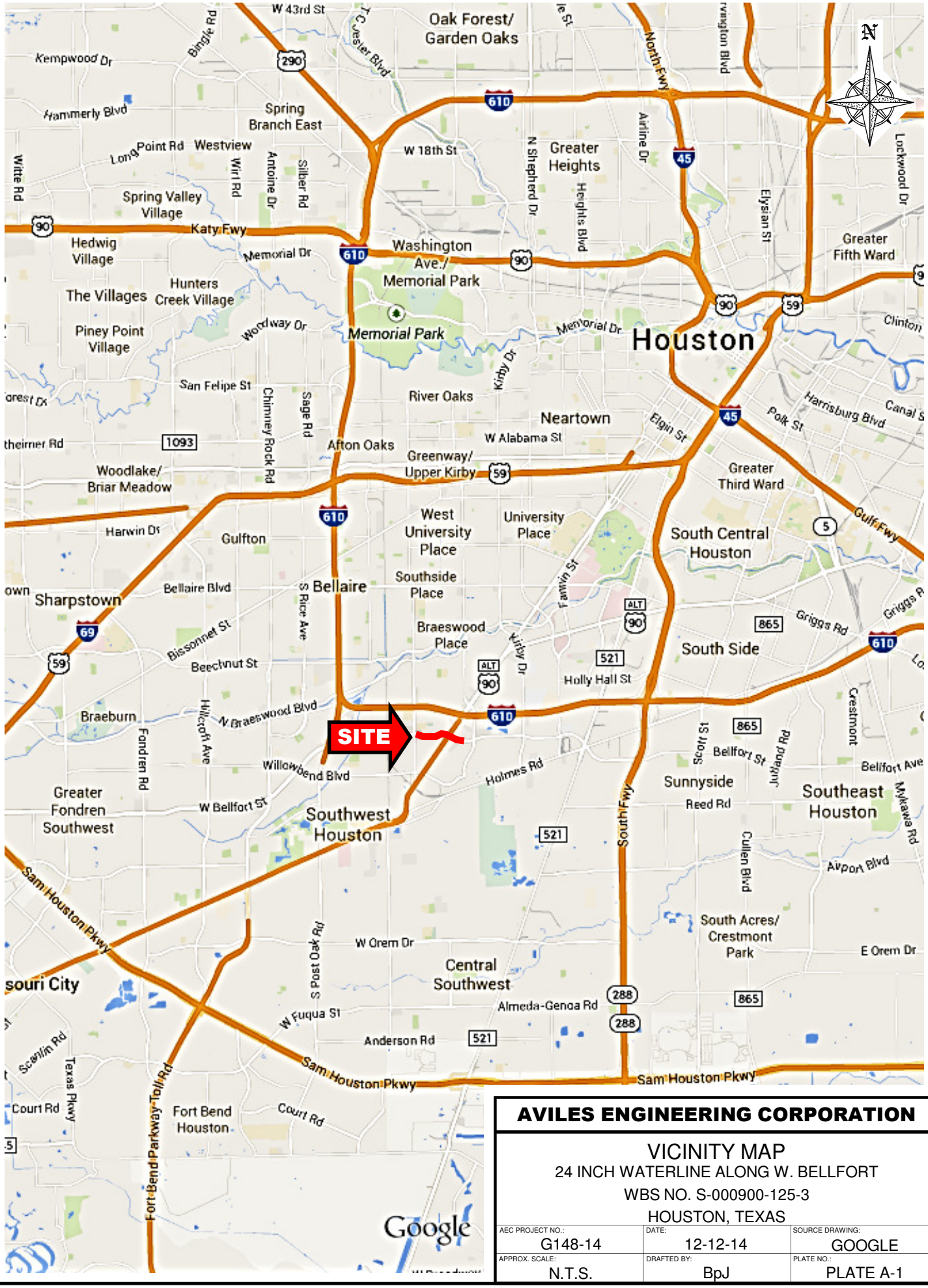

AVILES ENGINEERING CORPORATION

VICINITY MAP

24 INCH WATERLINE ALONG W. BELLFORT

WBS NO. S-000900-125-3

HOUSTON, TEXAS

AEC PROJECT NO.:	DATE:	SOURCE DRAWING:
G148-14	12-12-14	GOOGLE
APPROX. SCALE:	DRAFTED BY:	PLATE NO.:
N.T.S.	BpJ	PLATE A-1

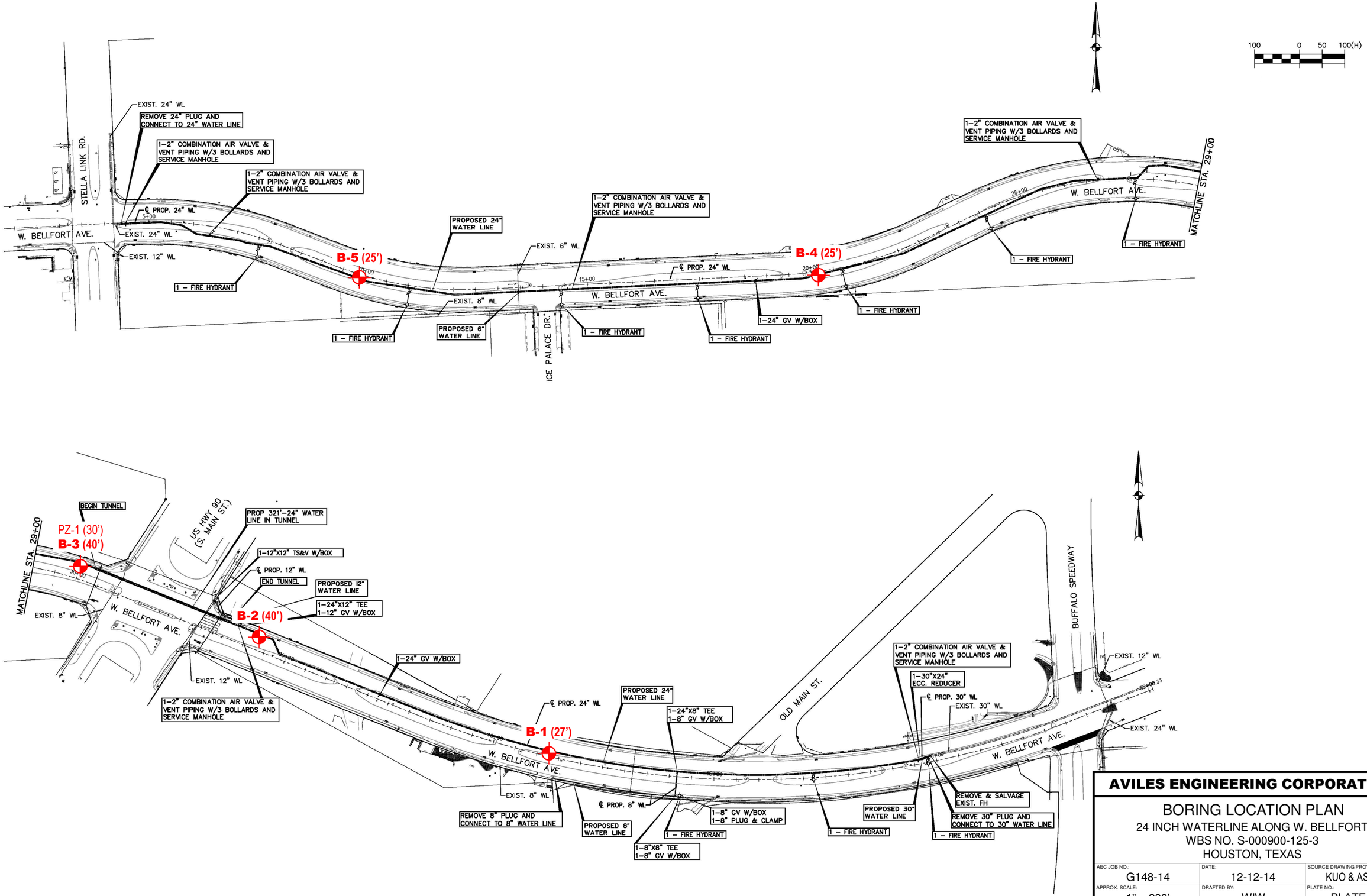
100 0 50 100(H)
STELLA LINK RD.
W. BELLFORT AVE.
EXIST. 24" WL
REMOVE 24" PLUG AND CONNECT TO 24" WATER LINE
1-2" COMBINATION AIR VALVE & VENT PIPING W/3 BOLLARDS AND SERVICE MANHOLE
℄ PROP. 24" WL
5+00
EXIST. 24" WL
EXIST. 12" WL
1 - FIRE HYDRANT
B-5 (25')
10+00
PROPOSED 24" WATER LINE
EXIST. 6" WL
EXIST. 8" WL
PROPOSED 6" WATER LINE
ICE PALACE DR.
15+00
℄ PROP. 24" WL
B-4 (25')
20+00
1-24" GV W/BOX
25+00
MATCHLINE STA. 29+00
BEGIN TUNNEL
PZ-1 (30')
B-3 (40')
30+00
US HWY 90 (S. MAIN ST.)
PROP 321'-24" WATER LINE IN TUNNEL
1-12"X12" TS&V W/BOX
℄ PROP. 12" WL
END TUNNEL
PROPOSED 12" WATER LINE
1-24"X12" TEE
1-12" GV W/BOX
B-2 (40')
35+00
40+00
45+00
50+00
55+00
60+00
65+00
70+00
75+00
80+00
85+00
90+00
95+00
100+00
105+00
110+00
115+00
120+00
125+00
130+00
135+00
140+00
145+00
150+00
155+00
160+00
165+00
170+00
175+00
180+00
185+00
190+00
195+00
200+00
205+00
210+00
215+00
220+00
225+00
230+00

AVILES ENGINEERING CORP.
GEOTECHNICAL ENGINEERS

PROJECT: **24-in Waterline along W. Bellfort** BORING **B-1**

COH WBS No. **S-000900-0125-3** TYPE **4" Dry Auger** DATE **9/2/14**

ELEVATION IN FEET	DEPTH IN FEET	SYMBOL	SAMPLE INTERVAL	DESCRIPTION	S.P.T. BLOWS / FT.	-200 MESH	DRY DENSITY, PCF	MOISTURE CONTENT, %	LIQUID LIMIT	PLASTIC LIMIT	PLASTICITY INDEX
				Survey Coordinates (TSPC, Surface): *Easting: 3102984.4018* *Northing: 13810999.5556* *Elevation: 52.186*							
	0			Fill: very stiff, dark gray, tan, and red Lean Clay w/Sand (CL), with roots		76		19	49	16	33
50				-dark gray, light gray, and tan, with sand seams and calcareous nodules 2'-4'				20			
	5			Stiff to very stiff, gray and tan Lean Clay (CL), with ferrous stains			102	24			
				-with sand pockets 4'-6'							
45				-with sandy clay pockets, siltstone fragments, and calcareous nodules 6'-8'				20			
	10			Very stiff, brown, light gray, and tan Fat Clay w/Sand (CH), with slickensides, sandy clay seams, abundant calcareous nodules, siltstone fragments, and ferrous nodules		71		23	54	17	37
				-reddish brown and light gray 10'-12'				30			
40				Stiff to very stiff, light gray, tan, and brown Lean Clay (CL)			101	29			
				-tan and light gray 14'-19'							
	15							19			
35				-with siltstone fragments and calcareous nodules 16'-19'		88		23	47	17	30
							105	19			
	20			Medium dense, tan Silty Sand (SM), with siltstone fragments		47					
30											
								25			
	25			-with clay layers 25'-27'	15	40		24			
25				Termination Depth = 27 feet							
	30										
20											
	35										

SHEAR STRENGTH, TSF

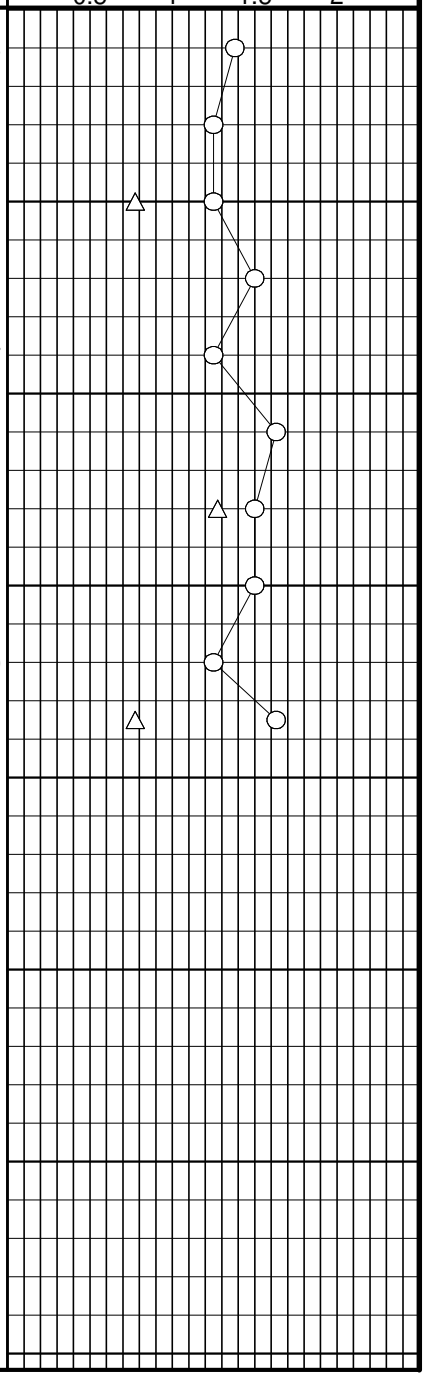

BORING DRILLED TO **27** FEET WITHOUT DRILLING FLUID

WATER ENCOUNTERED AT **n/a** FEET WHILE DRILLING

WATER LEVEL AT **17.3** FEET AFTER **COMPLETE**

DRILLED BY **Van & Sons** DRAFTED BY **BPJ** LOGGED BY **BPJ**

AVILES ENGINEERING CORP.
GEOTECHNICAL ENGINEERS

PROJECT: **24-in Waterline along W. Bellfort** BORING **B-2**

COH WBS No. **S-000900-0125-3** TYPE **4" Dry Auger** DATE **9/2/14**

DESCRIPTION
Survey Coordinates (TSPC, Surface):
Easting: 3102158.5544
Northing: 13811311.9562
Elevation: 52.462

ELEVATION IN FEET	DEPTH IN FEET	DESCRIPTION	S.P.T. BLOWS / FT.	-200 MESH	DRY DENSITY, PCF	MOISTURE CONTENT, %	LIQUID LIMIT	PLASTIC LIMIT	PLASTICITY INDEX
	0	Pavement: 12" concrete							
50		Very stiff to hard, dark gray Fat Clay (CH), with ferrous stains				27			
		-with siltstone fragments and calcareous nodules 2'-4'			109	20			
	5	Hard, tan and light gray Sandy Lean Clay (CL), with siltstone fragments, calcareous nodules, and ferrous stains		66		11	45	16	29
45		Very stiff to hard, reddish brown and light gray Fat Clay (CH), with slickensides				13			
		-with siltstone fragments 8'-12'				27			
	10				97	27			
40				98		31	82	30	52
	15	Very stiff to hard, tan and light gray Fat Clay w/Sand (CH)				23			
35		-with siltstone fragments and calcareous nodules 16'-28'				21			
					102	25			
	20	-with clay pockets 20'-26'		77		20	65	20	45
30						19			
	25					21			
25					105	22			
		Hard, brown, light gray, and tan Lean Clay (CL), with abundant silt seams and partings		94		22	38	19	19
	30	Hard, reddish brown and light gray Fat Clay (CH), with slickensides, siltstone fragments, and calcareous nodules				23			
20		Very stiff to hard, light gray and tan Lean Clay w/Sand (CL), with siltstone fragments, calcareous nodules, and ferrous stains			118	14			
	35			78		19	40	15	25

SHEAR STRENGTH, TSF

△ Confined Compression
● Unconfined Compression
○ Pocket Penetrometer
□ Torvane

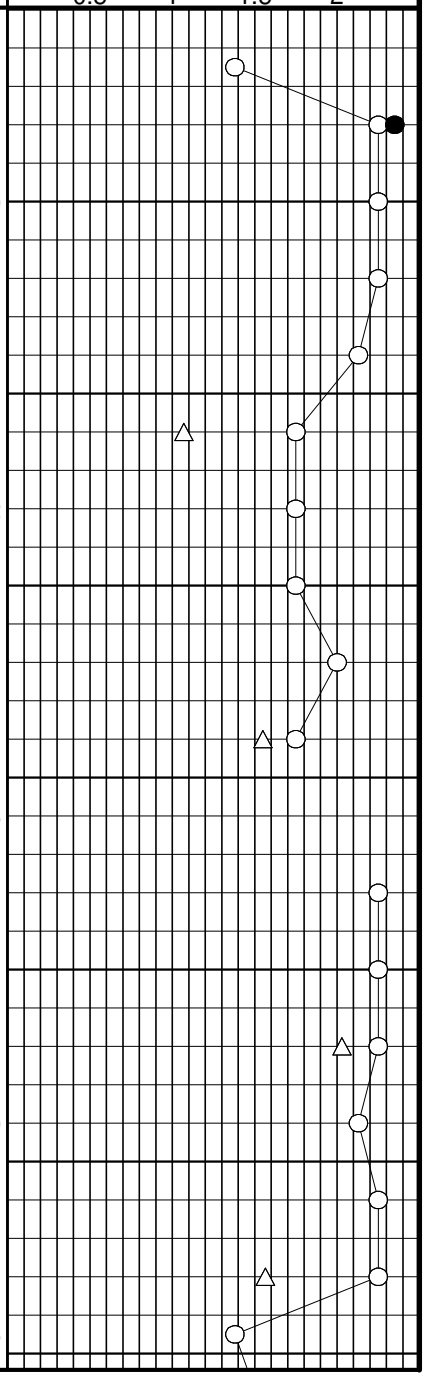

BORING DRILLED TO **30** FEET WITHOUT DRILLING FLUID
WATER ENCOUNTERED AT **29** FEET WHILE DRILLING
WATER LEVEL AT **23.8** FEET AFTER **1/4 HR**
DRILLED BY **Van & Sons** DRAFTED BY **BPJ** LOGGED BY **BPJ**

AVILES ENGINEERING CORP.
GEOTECHNICAL ENGINEERS

PROJECT: **24-in Waterline along W. Bellfort** BORING **B-2**

COH WBS No. **S-000900-0125-3** TYPE **4" Dry Auger** DATE **9/2/14**

ELEVATION IN FEET	DEPTH IN FEET	SYMBOL	SAMPLE INTERVAL	DESCRIPTION	S.P.T. BLOWS / FT.	-200 MESH	DRY DENSITY, PCF	MOISTURE CONTENT, %	LIQUID LIMIT	PLASTIC LIMIT	PLASTICITY INDEX
				Lean Clay w/Sand (CL) (cont.)							
15								18			
	40			Termination Depth = 40 feet							
10											
	45										
5											
	50										
0											
	55										
-5											
	60										
-10											
	65										
-15											
	70										

SHEAR STRENGTH, TSF

△ Confined Compression
● Unconfined Compression
○ Pocket Penetrometer
□ Torvane

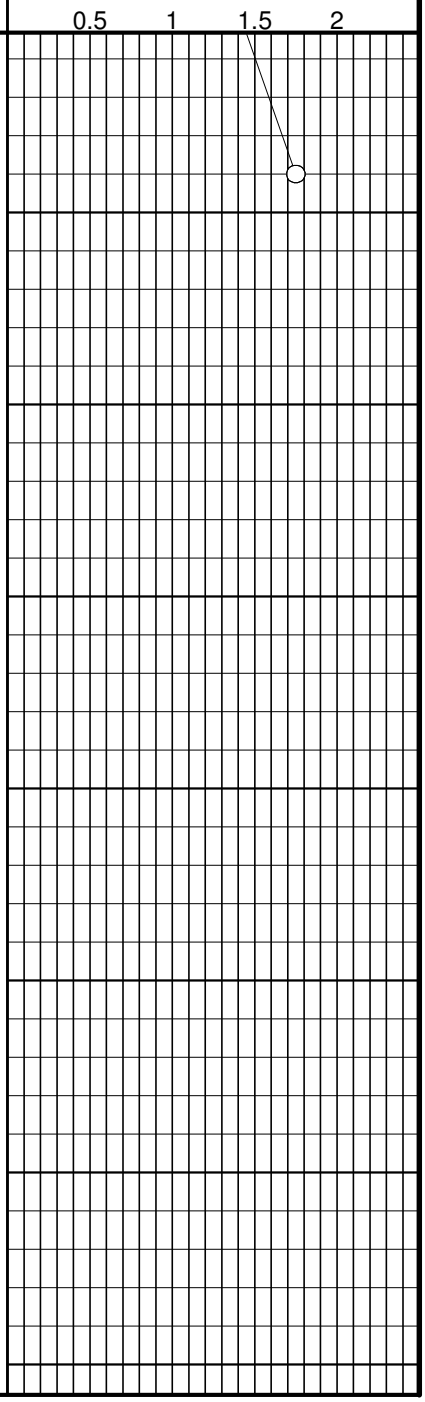

BORING DRILLED TO **30** FEET WITHOUT DRILLING FLUID
WATER ENCOUNTERED AT **29** FEET WHILE DRILLING
WATER LEVEL AT **23.8** FEET AFTER **1/4 HR**
DRILLED BY **Van & Sons** DRAFTED BY **BPJ** LOGGED BY **BPJ**

AVILES ENGINEERING CORP.
GEOTECHNICAL ENGINEERS

PROJECT: **24-in Waterline along W. Bellfort** BORING **B-3**

COH WBS No. **S-000900-0125-3** TYPE **4" Dry Auger** DATE **9/2/14**

DESCRIPTION
Survey Coordinates (TSPC, Surface):
Easting: 3101819.3568
Northing: 13811446.5540
Elevation: 53.387

ELEVATION IN FEET	DEPTH IN FEET	SYMBOL	SAMPLE INTERVAL	DESCRIPTION	S.P.T. BLOWS / FT.	-200 MESH	DRY DENSITY, PCF	MOISTURE CONTENT, %	LIQUID LIMIT	PLASTIC LIMIT	PLASTICITY INDEX
	0			Pavement: 9" concrete							
				Fill: stiff to very stiff, dark gray, lime-stabilized Fat Clay (CH)			91	27			
50				Stiff to very stiff, tan and gray Lean Clay w/ Sand (CL), with ferrous stains				22			
	5			-tan, red, and light gray, with sandy clay seams 4'-6', and calcareous nodules 4'-8'		82		18	46	17	29
				-with clay pockets and siltstone fragments 6'-8'				18			
45				Stiff to very stiff, reddish brown and light gray Fat Clay (CH), with slickensides and siltstone fragments			91	32			
	10			-with calcareous nodules 10'-14'				30			
40						97		32	67	28	39
	15			Very stiff, tan and light gray Lean Clay (CL)				21			
				Very stiff, reddish brown and light gray Silty Clay (CL-ML), with siltstone fragments and calcareous nodules			108	19			
35								18			
	20					90		20	29	22	7
30							113	19			
	25			Medium dense, tan Silty Sand (SM), wet	22	19		25			
				Hard, reddish brown and light gray Fat Clay (CH), with slickensides				23			
25				Very stiff, tan and brown Sandy Lean Clay (CL), with silt partings			101	23			
	30			-with slickensides and fat clay seams 28'-30'		69		17	26	17	9
				-tan and light gray 30'-40'				17			
20				-with siltstone fragments and calcareous nodules 34'-40'			115	17			
	35										

SHEAR STRENGTH, TSF

△ Confined Compression
● Unconfined Compression
○ Pocket Penetrometer
□ Torvane

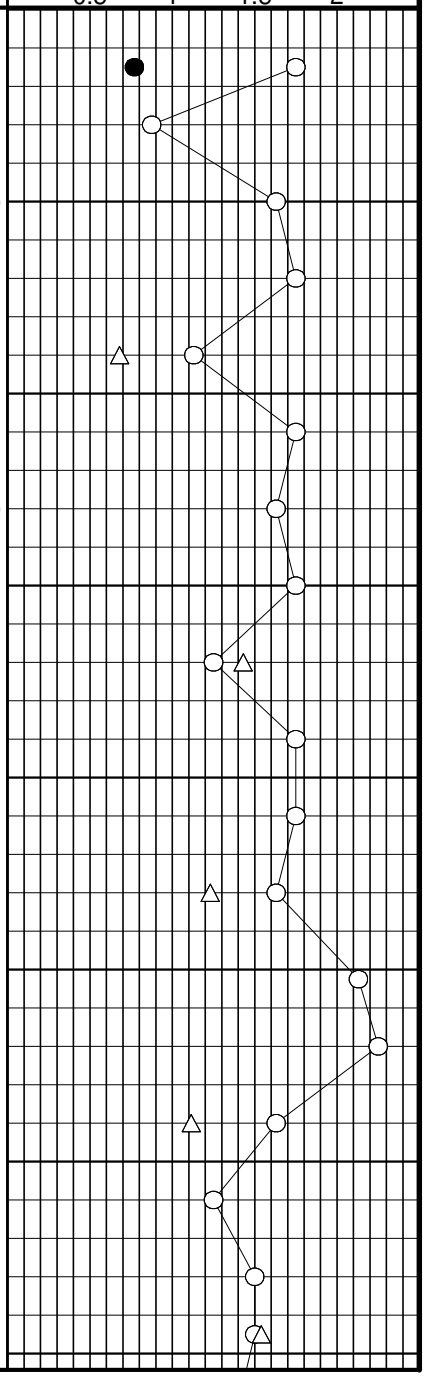

BORING DRILLED TO **26** FEET WITHOUT DRILLING FLUID
WATER ENCOUNTERED AT **24** FEET WHILE DRILLING
WATER LEVEL AT **17.0** FEET AFTER **1/4 HR**
DRILLED BY **Van & Sons** DRAFTED BY **BPJ** LOGGED BY **BPJ**

AVILES ENGINEERING CORP.
GEOTECHNICAL ENGINEERS

PROJECT: **24-in Waterline along W. Bellfort** BORING **B-3**

COH WBS No. **S-000900-0125-3** TYPE **4" Dry Auger** DATE **9/2/14**

ELEVATION IN FEET	DEPTH IN FEET	SYMBOL	SAMPLE INTERVAL	DESCRIPTION	S.P.T. BLOWS / FT.	-200 MESH	DRY DENSITY, PCF	MOISTURE CONTENT, %	LIQUID LIMIT	PLASTIC LIMIT	PLASTICITY INDEX
				Sandy Lean Clay (CL) (cont.)							
15								16			
	40			Termination Depth = 40 feet							
10											
	45										
5											
	50										
0											
	55										
-5											
	60										
-10											
	65										
-15											
	70										

SHEAR STRENGTH, TSF

△ Confined Compression
● Unconfined Compression
○ Pocket Penetrometer
□ Torvane

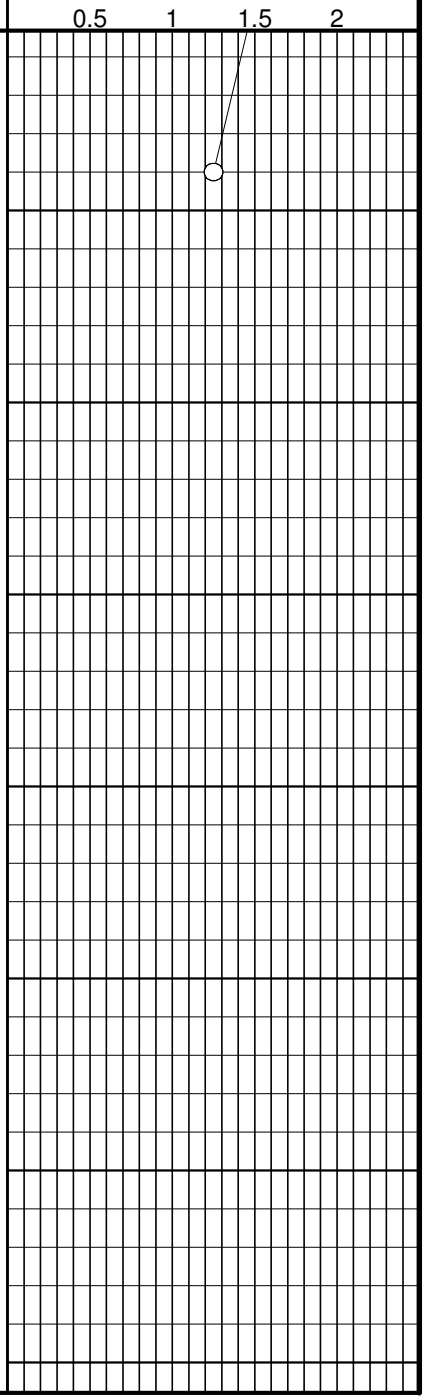

BORING DRILLED TO **26** FEET WITHOUT DRILLING FLUID
WATER ENCOUNTERED AT **24** FEET WHILE DRILLING
WATER LEVEL AT **17.0** FEET AFTER **1/4 HR**
DRILLED BY **Van & Sons** DRAFTED BY **BPJ** LOGGED BY **BPJ**

AVILES ENGINEERING CORP.
GEOTECHNICAL ENGINEERS

PROJECT: **24-in Waterline along W. Bellfort** BORING **B-4**

COH WBS No. **S-000900-0125-3** TYPE **4" Dry Auger** DATE **9/2/14**

ELEVATION IN FEET	DEPTH IN FEET	SYMBOL	SAMPLE INTERVAL	DESCRIPTION	S.P.T. BLOWS / FT.	-200 MESH	DRY DENSITY, PCF	MOISTURE CONTENT, %	LIQUID LIMIT	PLASTIC LIMIT	PLASTICITY INDEX
				Survey Coordinates (TSPC, Surface): *Easting: 3100874.6274* *Northing: 13811243.3701* *Elevation: 56.140*							
55	0			Fill: stiff to very stiff, tan and dark gray Sandy Lean Clay (CL), with calcareous nodules				30			
				-with gravel and roots 0'-2'			118	16			
				-tan, dark gray, and light gray, with shell and siltstone fragments 2'-4'							
	5			Stiff to very stiff, dark gray Fat Clay w/Sand (CH), with ferrous stains		71		26	65	18	47
50				-reddish brown and light gray 6'-8'				21			
				-light gray and tan, with calcareous nodules 8'-10'				18			
	10			-tan, light gray, and red, with slickensides and clay pockets 10'-12'			106	19			
45				Very stiff, reddish brown and light gray Fat Clay (CH), with slickensides		94		28	69	26	43
	15			Stiff to hard, tan, brown, and light gray Sandy Lean Clay (CL), with ferrous stains				18			
40				-tan, brown, and light gray, with siltstone fragments and calcareous nodules 16'-25'				18			
				-with silt partings 18'-25'		60	108	20	28	18	10
	20										
35											
								17			
	25			Termination Depth = 25 feet							
30											
	30										
25											
	35										

SHEAR STRENGTH, TSF

△ Confined Compression
● Unconfined Compression
○ Pocket Penetrometer
□ Torvane

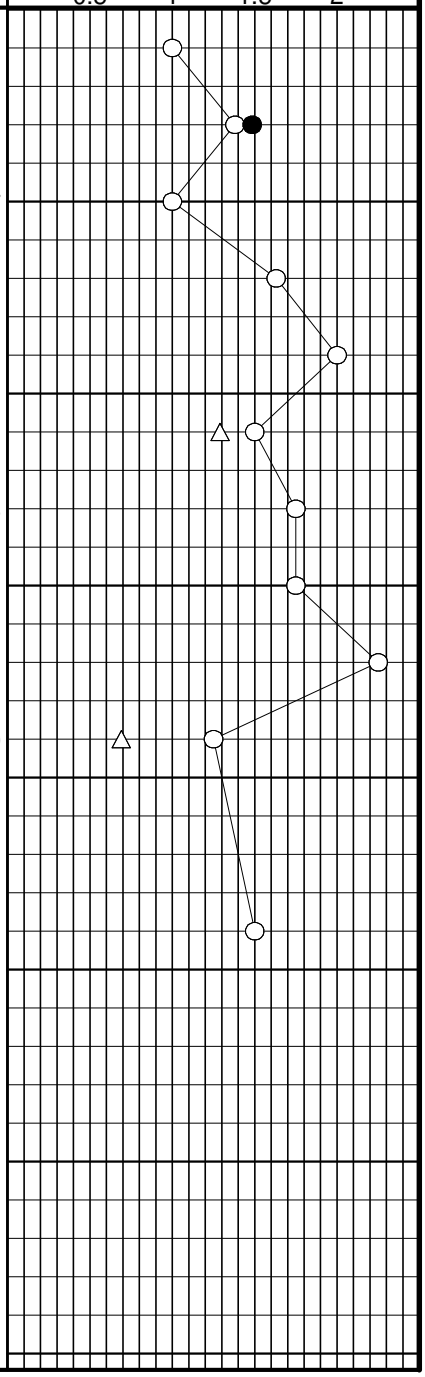

BORING DRILLED TO **25** FEET WITHOUT DRILLING FLUID
WATER ENCOUNTERED AT **n/a** FEET WHILE DRILLING
WATER LEVEL AT **n/a** FEET AFTER **COMPLETE**
DRILLED BY **Van & Sons** DRAFTED BY **BPJ** LOGGED BY **BPJ**

AVILES ENGINEERING CORP.
GEOTECHNICAL ENGINEERS

PROJECT: **24-in Waterline along W. Bellfort** BORING **B-5**

COH WBS No. **S-000900-0125-3** TYPE **4" Dry Auger** DATE **9/2/14**

DESCRIPTION
Survey Coordinates (TSPC, Surface):
Easting: 3099837.5342
Northing: 13811229.1211
Elevation: 57.811

ELEVATION IN FEET	DEPTH IN FEET	SYMBOL	SAMPLE INTERVAL	DESCRIPTION	S.P.T. BLOWS / FT.	-200 MESH	DRY DENSITY, PCF	MOISTURE CONTENT, %	LIQUID LIMIT	PLASTIC LIMIT	PLASTICITY INDEX
	0			Fill: very stiff, dark gray Fat Clay w/Sand (CH), with calcareous nodules		72		19	50	17	33
55				-with sandy clay pockets, gravel, and roots 0'-2'				19			
				-dark gray, tan, and light gray, with sand pockets 2'-4'							
	5			Stiff to very stiff, dark gray Fat Clay w/Sand (CH), with ferrous stains			112	20			
				-with roots 4'-6'				18			
50				-light gray and tan 6'-10', with calcareous nodules 6'-12'							
				-with siltstone fragments 8'-12'		73		18	53	16	37
	10			-brown and light gray 10'-12'							
								20			
45							100	23			
	15			Very stiff, reddish brown and light gray Lean Clay (CL), with silt partings				21			
				-with fat clay seams and silt seams 15'-17'		86		28	41	14	27
40				-light gray and tan 16'-25'							
								19			
	20										
35											
							110	19			
	25			Termination Depth = 25 feet							
30											
	30										
25											
	35										

SHEAR STRENGTH, TSF

△ Confined Compression
● Unconfined Compression
○ Pocket Penetrometer
□ Torvane

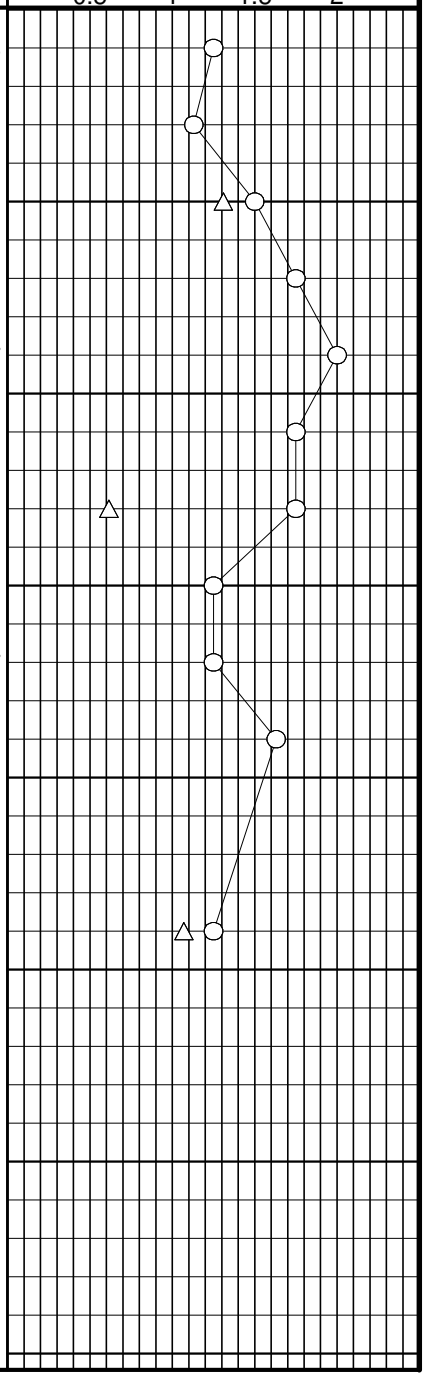

BORING DRILLED TO **25** FEET WITHOUT DRILLING FLUID
WATER ENCOUNTERED AT **n/a** FEET WHILE DRILLING
WATER LEVEL AT **n/a** FEET AFTER **COMPLETE**
DRILLED BY **Van & Sons** DRAFTED BY **BPJ** LOGGED BY **BPJ**

KEY TO SYMBOLS

Symbol	Description
Strata symbols	
	Fill
	Low plasticity clay
	High plasticity clay
	Silty sand
	Paving
	Silty low plasticity clay
Misc. Symbols	
	Subsequent water table depth
○	Pocket Penetrometer
△	Confined Compression
	Water table depth during drilling
●	Unconfined Compression
Soil Samplers	
	Undisturbed thin wall Shelby tube
	Standard penetration test
	Rock core

Symbol	Description
	Auger

AYLES ENGINEERING CORP.

CLASSIFICATION OF SOILS FOR ENGINEERING PURPOSES

ASTM Designation D-2487

MAJOR DIVISIONS				GROUP SYMBOL	TYPICAL NAMES
COARSE-GRAINED SOILS (Less than 50% passes No. 200 sieve)	GRAVELS (Less than 50% of coarse fraction passes No. 4 sieve)	CLEAN GRAVELS (Less than 5% passes No. 200 sieve)		GW	Well-graded gravel, well-graded gravel with sand
				GP	Poorly-graded gravel, poorly-graded gravel with sand
		GRAVELS WITH FINES (More than 12% passes No. 200 sieve)	Limits plot below "A" line & hatched zone on plasticity chart	GM	Silty gravel, silty gravel with sand
			Limits plot above "A" line & hatched zone on plasticity chart	GC	Clayey gravel, clayey gravel with sand
	SANDS (50% or more of coarse fraction passes No. 4 sieve)	CLEAN SANDS (Less than 5% passes No. 200 sieve)		SW	Well-graded sand, well-graded sand with gravel
				SP	Poorly-graded sand, poorly-graded sand with gravel
		SANDS WITH FINES (More than 12% passes No. 200 sieve)	Limits plot below "A" line & hatched zone on plasticity chart	SM	Silty sand, silty sand with gravel
			Limits plot above "A" line & hatched zone on plasticity chart	SC	Clayey sand, clayey sand with gravel
FINE-GRAINED SOILS (50% or more passes No. 200 sieve)		SILTS AND CLAYS (Liquid Limit Less Than 50%)		ML	Silt, silt with sand, silt with gravel, sandy silt, gravelly silt
				CL	Lean clay, lean clay with sand, lean clay with gravel, sandy lean clay, gravelly lean clay
				OL	Organic clay, organic clay with sand, sandy organic clay, organic silt, sandy organic silt
		SILTS AND CLAYS (Liquid Limit 50% or More)		MH	Elastic silt, elastic silt with sand, sandy elastic silt, gravelly elastic silt
				CH	Fat clay, fat clay with sand, fat clay with gravel, sandy fat clay, gravelly fat clay
				OH	Organic clay, organic clay with sand, sandy organic clay, organic silt, sandy organic silt

NOTE: Coarse soils between 5% and 12% passing the No. 200 sieve and fine-grained soils with limits plotting in the hatched zone of the plasticity chart are to have dual symbols.

PLASTICITY CHART

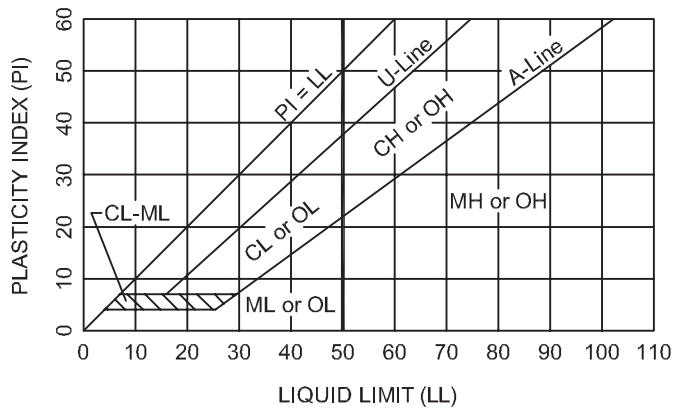

Equation of A-Line: Horizontal at PI=4 to LL=25.5, then PI=0.73(LL-20)

Equation of U-Line: Vertical at LL=16 to PI=7, then PI=0.9(LL-8)

DEGREE OF PLASTICITY OF COHESIVE SOILS

Degree of Plasticity	Plasticity Index
None	0 - 4
Slight	5 - 10
Medium	11 - 20
High	21 - 40
Very High	>40

SOIL SYMBOLS

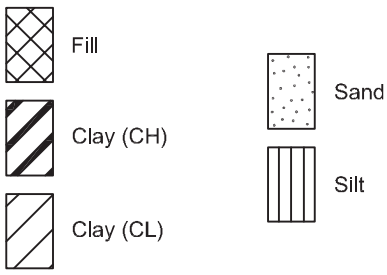

AYLES ENGINEERING CORP.

TERMS USED ON BORING LOGS

SOIL GRAIN SIZE

U.S. STANDARD SIEVE

6"	3"	3/4"	#4	#10	#40	#200	
BOULDERS	COBBLES	GRAVEL		SAND		SILT	CLAY
		COARSE	FINE	COARSE	MEDIUM	FINE	
152	76.2	19.1	4.76	2.00	0.420	0.074	0.002

SOIL GRAIN SIZE IN MILLIMETERS

STRENGTH OF COHESIVE SOILS

Consistency	Undrained Shear Strength, Kips per Sq. ft.
Very Soft	less than 0.25
Soft	0.25 to 0.50
Firm	0.50 to 1.00
Stiff	1.00 to 2.00
Very Stiff	2.00 to 4.00
Hard	greater than 4.00

RELATIVE DENSITY OF COHESIONLESS SOILS FROM STANDARD PENETRATION TEST

Very Loose	<4 bpf
Loose	5-10 bpf
Medium Dense	11-30 bpf
Dense	31-50 bpf
Very Dense	>50 bpf

SPLIT-BARREL SAMPLER DRIVING RECORD

Blows per Foot	Description
25	25 blows driving sampler 12 inches, after initial 6 inches of seating.
50/7"	50 blows driving sampler 7 inches, after initial 6 inches of seating.
Ref/3"	50 blows driving sampler 3 inches, during initial 6-inches seating interval.

NOTE: To avoid change to sampling tools, driving is limited to 50 blows during or after seating interval.

DRY STRENGTH ASTM D2488

None	Dry specimen crumbles into powder with mere pressure of handling
Low	Dry specimen crumbles into powder with some finger pressure
Medium	Dry specimen breaks into pieces or crumbles with considerable pressure
High	Dry specimen cannot be broken with finger pressure, it can be broken between thumb and hard surface
Very High	Dry specimen cannot be broken between thumb and hard surface

MOISTURE CONDITION ASTM D2488

Dry	Absence of moisture, dusty, dry to the touch
Moist	Damp but no visible water
Wet	Visible free water

SOIL STRUCTURE

Slickensided	Having planes of weakness that appear slick and glossy. The degree of slickensidedness depends upon the spacing of slickensides and the easiness of breaking along these planes.
Fissured	Containing shrinkage or relief cracks, often filled with fine sand or silt; usually more or less vertical.
Pocket	Inclusion of material of different texture that is smaller than the diameter of the sample.
Parting	Inclusion less than 1/8 inch thick extending through the sample.
Seam	Inclusion 1/8 inch to 3 inches thick extending through the sample.
Layer	Inclusion greater than 3 inches thick extending through the sample.
Laminated	Soil sample composed of alternating partings or seams of different soil types.
Interlayered	Soil sample composed of alternating layers of different soil types.
Intermixed	Soil sample composed of pockets of different soil types and layered or laminated structure is not evident.
Calcareous	Having appreciable quantities of calcium material.

AVILES ENGINEERING CORP.

ASTM & TXDOT DESIGNATION FOR SOIL LABORATORY TESTS

NAME OF TEST	ASTM TEST DESIGNATION	TXDOT TEST DESIGNATION
Moisture Content	D 2216	Tex-103-E
Specific Gravity	D 854	Tex-108-E
Sieve Analysis	D 421 D 422	Tex-110-E (Part 1)
Hydrometer Analysis	D 422	Tex-110-E (Part 2)
Minus No. 200 Sieve	D 1140	Tex-111-E
Liquid Limit	D 4318	Tex-104-E
Plastic Limit	D 4318	Tex-105-E
Shrinkage Limit	D 427	Tex-107-E
Standard Proctor Compaction	D 698	Tex-114-E
Modified Proctor Compaction	D 1557	Tex-113-E
Permeability (constant head)	D 2434	-
Consolidation	D 2435	-
Direct Shear	D 3080	-
Unconfined Compression	D 2166	-
Unconsolidated-Undrained Triaxial	D 2850	Tex-118-E
Consolidated-Undrained Triaxial	D 4767	Tex-131-E
Pinhole Test	D 4647	-
California Bearing Ratio	D 1883	-
Unified Soil Classification System	D 2487	Tex-142-E

SUMMARY OF TEST RESULTS	Project Name: 24-INCH WATER LINE ALONG WEST BELLFORT STREET FROM STELLA LINK ROAD TO BUFFALO BAYOU
	WBS Number: S-000900-0125-3
Aviles Engineering Corporation	AEC Project Number: G148-14

Boring No.	Sample				SPT (blows/ft)	Water Content (%)	Dry Density (pcf)	Atterberg Limits			Percent Passing Sieve #200 (%)	Shear Strength (tsf)				Type of Material
	No.	Depth (ft)		Type				LL (%)	PL (%)	PI (%)		Unconfined Compression	UU (confining pressure, psi)	Torvane	Pocket Penetrometer	
		Top	Bottom													
B-1	1	0.0	2.0	UD		19		49	16	33	76.4				2.75	Fill: Lean Clay w/Sand (CL)
	2	2.0	4.0	UD		20									2.50	Fill: Lean Clay w/Sand (CL)
	3	4.0	6.0	UD		24	102.2						1.55 (3)		2.50	Lean Clay (CL)
	4	6.0	8.0	UD		20									3.00	Lean Clay (CL)
	5	8.0	10.0	UD		23		54	17	37	71.0				2.50	Fat Clay w/Sand (CH)
	6	10.0	12.0	UD		30									3.25	Fat Clay w/Sand (CH)
	7	12.0	14.0	UD		29	101.4						2.55 (9)		3.00	Lean Clay (CL)
	8	14.0	16.0	UD		19									3.00	Lean Clay (CL)
	9	16.0	18.0	UD		23		47	17	30	87.9				2.50	Lean Clay (CL)
	10	18.0	20.0	UD		19	104.8				47.2		1.55 (12)		3.25	Lean Clay (CL)
	11	23.0	25.0	UD		25										Silty Sand (SM)
	12	25.5	27.0	SPT	15	24					40.4					Silty Sand (SM)
B-2	1	0.0	2.0	UD		27									2.75	Fat Clay (CH)
	2	2.0	4.0	UD		20	109.0					4.70			4.50	Fat Clay (CH)
	3	4.0	6.0	UD		11		45	16	29	65.8				4.50	Sandy Lean Clay (CL)
	4	6.0	8.0	UD		13									4.50	Fat Clay (CH)
	5	8.0	10.0	UD		27									4.25	Fat Clay (CH)
	6	10.0	12.0	UD		27	97.1						2.14 (7)		3.50	Fat Clay (CH)
	7	12.0	14.0	UD		31		82	30	52	98.4				3.50	Fat Clay (CH)
	8	14.0	16.0	UD		23									3.50	Fat Clay w/Sand (CH)
	9	16.0	18.0	UD		21									4.00	Fat Clay w/Sand (CH)
	10	18.0	20.0	UD		25	101.6						3.10 (13)		3.50	Fat Clay w/Sand (CH)
	11	20.0	22.0	AG		20		65	20	45	77.0					Fat Clay w/Sand (CH)
	12	22.0	24.0	UD		19									4.50	Fat Clay w/Sand (CH)
	13	24.0	26.0	UD		21									4.50	Fat Clay w/Sand (CH)
	14	26.0	28.0	UD		22	105.2						4.06 (17)		4.50	Fat Clay w/Sand (CH)
	15	28.0	30.0	UD		22		38	19	19	93.8				4.25	Lean Clay (CL)
	16	30.0	32.0	UD		23									4.50	Fat Clay (CH)
	17	32.0	34.0	UD		14	118.2						3.13 (19)		4.50	Lean Clay w/Sand (CL)
	18	34.0	35.0	UD		19		40	15	25	77.7				2.75	Lean Clay w/Sand (CL)
	19	38.0	40.0	UD		18									3.50	Lean Clay w/Sand (CL)

Legend			
	UD = UnDisturbed sample, extruded in field	LL = Liquid Limit	Notes:
	SS = Split Spoon sample	PL = Plastic Limit	
	AG = Auger Cuttings	PI = Plasticity Index	
	SPT = Standard Penetration Test	UU = Triaxial Compession	

SUMMARY OF TEST RESULTS	Project Name: 24-INCH WATER LINE ALONG WEST BELLFORT STREET FROM STELLA LINK ROAD TO BUFFALO BAYOU
	WBS Number: S-000900-0125-3
Aviles Engineering Corporation	AEC Project Number: G148-14

Boring No.	Sample				SPT (blows/ft)	Water Content (%)	Dry Density (pcf)	Atterberg Limits			Percent Passing Sieve #200 (%)	Shear Strength (tsf)				Type of Material
	No.	Depth (ft)		Type				LL (%)	PL (%)	PI (%)		Unconfined Compression	UU (confining pressure, psi)	Torvane	Pocket Penetrometer	
		Top	Bottom													
B-3	1	0.0	2.0	UD		27	90.6					1.54			3.50	Fill: Fat Clay (CH)
	2	2.0	4.0	UD		22									1.75	Lean Clay w/Sand (CL)
	3	4.0	6.0	UD		18		46	17	29	81.9				3.25	Lean Clay w/Sand (CL)
	4	6.0	8.0	UD		18									3.50	Lean Clay w/Sand (CL)
	5	8.0	10.0	UD		32	90.5						1.36 (6)		2.25	Fat Clay (CH)
	6	10.0	12.0	UD		30									3.50	Fat Clay (CH)
	7	12.0	14.0	UD		32		67	28	39	96.5				3.25	Fat Clay (CH)
	8	14.0	16.0	UD		21									3.50	Lean Clay (CL)
	9	16.0	18.0	UD		19	107.8						2.86 (11)		2.50	Silty Clay (CL-ML)
	10	18.0	20.0	UD		18									3.50	Silty Clay (CL-ML)
	11	20.0	22.0	UD		20		29	22	7	89.5				3.50	Silty Clay (CL-ML)
	12	22.0	24.0	UD		19	112.7						2.46 (13)		3.25	Silty Clay (CL-ML)
	13	24.5	26.0	SPT	22	25					18.7				4.25	Silty Sand (SM)
	14	26.0	28.0	UD		23									4.50	Fat Clay (CH)
	15	28.0	30.0	UD		23	101.2						2.23 (15)		3.25	Sandy Lean Clay (CL)
	16	30.0	32.0	UD		17		26	17	9	68.8				2.50	Sandy Lean Clay (CL)
	17	32.0	34.0	UD		17									3.00	Sandy Lean Clay (CL)
	18	34.0	35.0	UD		17	115.4						3.08 (18)		3.00	Sandy Lean Clay (CL)
	19	38.0	40.0	UD		16									2.50	Sandy Lean Clay (CL)
B-4	1	0.0	2.0	UD		30									2.00	Fill: Sandy Lean Clay (CL)
	2	2.0	4.0	UD		16	118.2					2.97			2.75	Fill: Sandy Lean Clay (CL)
	3	4.0	6.0	UD		26		65	18	47	71.4				2.00	Fat Clay w/Sand (CH)
	4	6.0	8.0	UD		21									3.25	Fat Clay w/Sand (CH)
	5	8.0	10.0	UD		18									4.00	Fat Clay w/Sand (CH)
	6	10.0	12.0	UD		19	105.6						2.58 (7)		3.00	Fat Clay w/Sand (CH)
	7	12.0	14.0	UD		28		69	26	43	93.5				3.50	Fat Clay (CH)
	8	14.0	16.0	UD		18									3.50	Sandy Lean Clay (CL)
	9	16.0	18.0	UD		18									4.50	Sandy Lean Clay (CL)
	10	18.0	20.0	UD		20	107.6	28	18	10	59.6		1.38 (13)		2.50	Sandy Lean Clay (CL)
	11	23.0	25.0	UD		17									3.00	Sandy Lean Clay (CL)

Legend			
	UD = UnDisturbed sample, extruded in field	LL = Liquid Limit	Notes:
	SS = Split Spoon sample	PL = Plastic Limit	
	AG = Auger Cuttings	PI = Plasticity Index	
	SPT = Standard Penetration Test	UU = Triaxial Compession	

SUMMARY OF TEST RESULTS	Project Name: 24-INCH WATER LINE ALONG WEST BELLFORT STREET FROM STELLA LINK ROAD TO BUFFALO BAYOU
	WBS Number: S-000900-0125-3
Aviles Engineering Corporation	AEC Project Number: G148-14

Boring No.	Sample				SPT (blows/ft)	Water Content (%)	Dry Density (pcf)	Atterberg Limits			Percent Passing Sieve #200 (%)	Shear Strength (tsf)				Type of Material
	No.	Depth (ft)		Type				LL (%)	PL (%)	PI (%)		Unconfined Compression	UU (confining pressure, psi)	Torvane	Pocket Penetrometer	
		Top	Bottom													
B-5	1	0.0	2.0	UD		19		50	17	33	71.9				2.50	Fill: Fat Clay w/Sand (CH)
	2	2.0	4.0	UD		19									2.25	Fill: Fat Clay w/Sand (CH)
	3	4.0	6.0	UD		20	112.1						2.62 (3)		3.00	Fat Clay w/Sand (CH)
	4	6.0	8.0	UD		18									3.50	Fat Clay w/Sand (CH)
	5	8.0	10.0	UD		18		53	16	37	72.6				4.00	Fat Clay w/Sand (CH)
	6	10.0	12.0	UD		20									3.50	Fat Clay w/Sand (CH)
	7	12.0	14.0	UD		23	99.9						1.23 (9)		3.50	Fat Clay w/Sand (CH)
	8	14.0	16.0	UD		21									2.50	Fat Clay w/Sand (CH)
	9	16.0	18.0	UD		28		41	14	27	86.0				2.50	Lean Clay (CL)
	10	18.0	20.0	UD		19									3.25	Lean Clay (CL)
	11	23.0	25.0	UD		19	109.5						2.14 (16)		2.50	Lean Clay (CL)

Legend			
	UD = UnDisturbed sample, extruded in field SS = Split Spoon sample AG = Auger Cuttings SPT = Standard Penetration Test	LL = Liquid Limit PL = Plastic Limit PI = Plasticity Index UU = Triaxial Compession	Notes:

AVILES ENGINEERING CORP.

APPENDIX B

Plate B-1	Generalized Soil Profiles
Plate B-2	Piezometer Installation Details

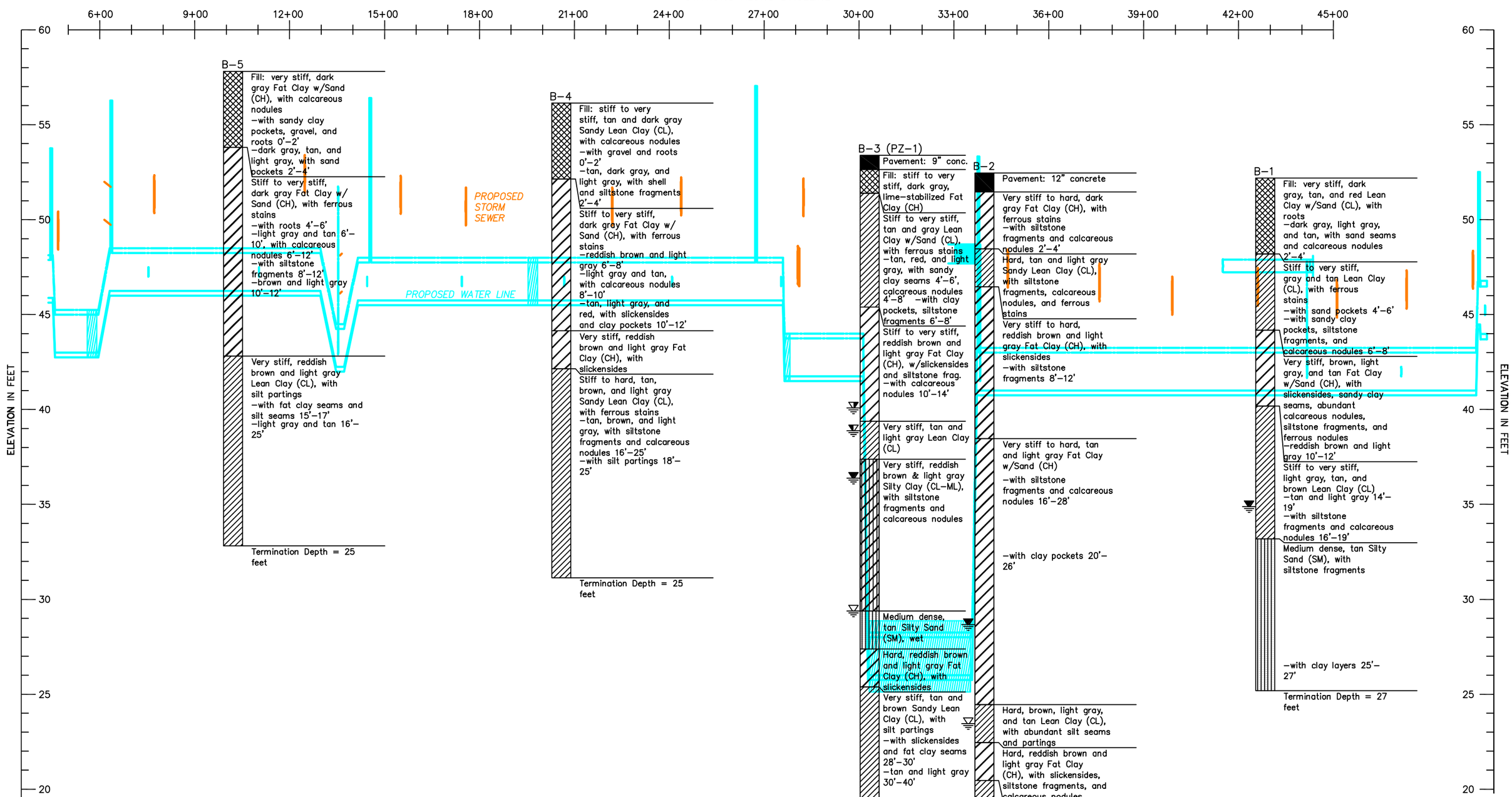

NOTE:

1. *SOIL STRATIGRAPHY AND SECONDARY SOIL STRUCTURE (SUCH AS SEAMS, LAYERS, OR POCKETS OF SANDS, SILTS, SLICKENSIDES, AND FISSURES) THAT ARE DIFFERENT FROM WHAT WERE IDENTIFIED IN THE ACTUAL BORINGS MAY EXIST AWAY FROM THESE BORINGS.*

AVILES ENGINEERING CORPORATION

GENERALIZED SOIL PROFILE

SWTP CONTRACT 87, 24-INCH WATERLINE ALONG WEST BELLFORT FROM STELLA LINK TO BUFFALO SPEEDWAY, WBS NO. S-000900-0125-4
HOUSTON, TEXAS

AEC PROJECT NO.: G148-14	DATE: 12-15-14	SOURCE DRAWING PROVIDED BY: AVILES ENGINEERING CORP.
VERTICAL SCALE: 1" = 5' HORIZONTAL SCALE: 1" = 300'	DRAFTED BY: BpJ	PLATE NO.: PLATE B-1

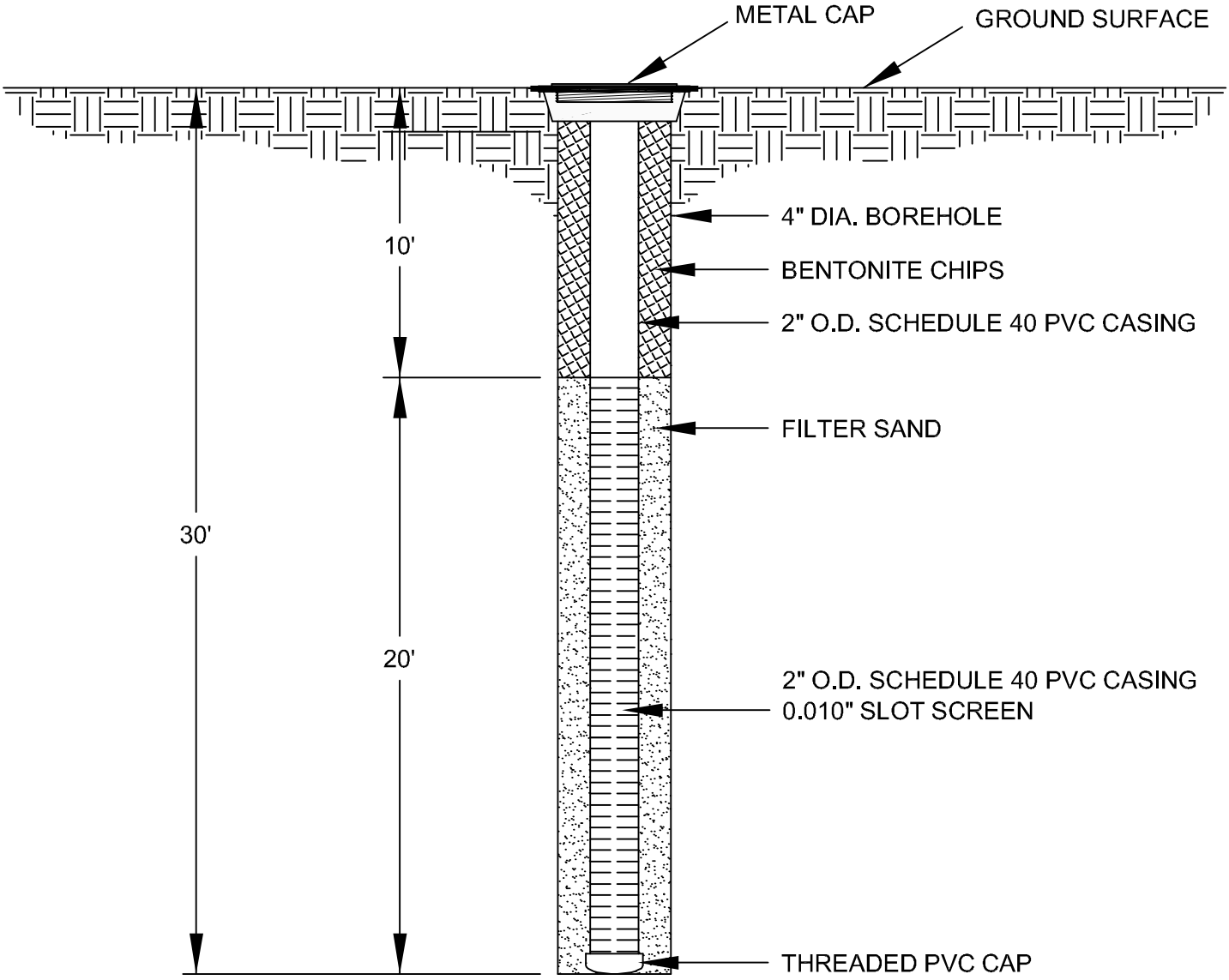

GROUNDWATER DEPTH FROM SURFACE:	DATE MEASURED:
14.5 FT	9/3/14
13.3 FT	10/3/14

AVILES ENGINEERING CORPORATION

PIEZOMETER INSTALLATION DETAILS
BORING B-3 (PZ-1)

SWTP CONTRACT 87, 24-INCH WATERLINE ALONG WEST BELLFORT FROM STELLA LINK TO BUFFALO SPEEDWAY, WBS NO. S-000900-0125-4
HOUSTON, TEXAS

AEC PROJECT NO.:	DATE:	SOURCE DWG. BY:
G148-14	10-06-14	AVILES ENGINEERING CORP.
SCALE: N.T.S.	DRAWN BY: BpJ	PLATE NO.: PLATE B-2

AVILES ENGINEERING CORP.

APPENDIX C

Plates C-1 to C-2	Recommended Geotechnical Design Parameters
Plate C-3	Load Coefficients for Pipe Loading
Plate C-4	Live Loads on Pipe Crossing Under Roadway

G148-14 24-INCH WATERLINE ALONG WEST BELLFORT AVENUE FROM STELLA LINK ROAD TO BUFFALO SPEEDWAY
SOIL PARAMETERS FOR UNDERGROUND UTILITIES

Boring	Depth (ft)	Soil Type	γ (pcf)	γ' (pcf)	OSHA Type	E'n (psi)	Short-Term					Long-Term				
							C (psf)	φ (deg)	K_a	K_0	K_p	C' (psf)	φ' (deg)	K_a	K_0	K_p
B-1	0-4	Fill: very stiff CL	120	58	C	600	1500	0	1.00	1.00	1.00	150	18	0.53	0.69	1.89
	4-8	Stiff to very stiff CL	127	65	B	600	1600	0	1.00	1.00	1.00	150	18	0.53	0.69	1.89
	8-12	Very stiff CH	120	58	B	600	1500	0	1.00	1.00	1.00	150	16	0.57	0.72	1.76
	12-17	Very stiff CL	130	68	B	1000	2500	0	1.00	1.00	1.00	250	18	0.53	0.69	1.89
	17-19	Stiff to very stiff CL	125	63	C*	600	1500	0	1.00	1.00	1.00	150	18	0.53	0.69	1.89
	19-27	Medium dense SM	120	58	C (19-20)	600	0	30	0.33	0.50	3.00	0	30	0.33	0.50	3.00
B-2	0-4	Very stiff to hard CH	131	69	B	600	2000	0	1.00	1.00	1.00	200	16	0.57	0.72	1.76
	4-6	Hard CL	125	63	B	1000	2500	0	1.00	1.00	1.00	250	18	0.53	0.69	1.89
	6-10	Hard CH	123	61	B	1000	2500	0	1.00	1.00	1.00	250	16	0.57	0.72	1.76
	10-14	Very stiff CH	123	61	B	1000	2200	0	1.00	1.00	1.00	200	16	0.57	0.72	1.76
	14-32	Very stiff to hard CH/CL	128	66	B (14-20)	1000	3000	0	1.00	1.00	1.00	300	16	0.57	0.72	1.76
	32-40	Very stiff to hard CL	135	73	n/a	1000	3000	0	1.00	1.00	1.00	300	18	0.53	0.69	1.89
B-3	0-2	Fill: stiff to very stiff CH	116	54	C	600	1600	0	1.00	1.00	1.00	150	16	0.57	0.72	1.76
	2-8	Stiff to very stiff CL	125	63	B	600	1500	0	1.00	1.00	1.00	150	18	0.53	0.69	1.89
	8-14	Stiff to very stiff CH	120	58	B	600	1400	0	1.00	1.00	1.00	125	16	0.57	0.72	1.76
	14-20	Very stiff CL/CL-ML	129	67	C*	600	2000	0	1.00	1.00	1.00	200	18	0.53	0.69	1.89
	20-24	Very stiff CL-ML	135	73	n/a	600	2400	0	1.00	1.00	1.00	225	18	0.53	0.69	1.89
	24-26	Medium dense SM	120	58	n/a	1000	0	30	0.33	0.50	3.00	0	30	0.33	0.50	3.00
	26-34	Very stiff CL/CH	124	62	n/a	1000	2200	0	1.00	1.00	1.00	200	18	0.53	0.69	1.89
	34-40	Very stiff CL	135	73	n/a	1000	2000	0	1.00	1.00	1.00	200	18	0.53	0.69	1.89
B-4	0-4	Fill: stiff to very stiff CL	137	75	C	600	1500	0	1.00	1.00	1.00	150	18	0.53	0.69	1.89
	4-14	Stiff to very stiff CH	126	64	B	1000	2600	0	1.00	1.00	1.00	250	16	0.57	0.72	1.76
	14-25	Stiff to hard CL	130	68	B (14-20)	600	1400	0	1.00	1.00	1.00	125	18	0.53	0.69	1.89

G148-14 24-INCH WATERLINE ALONG WEST BELLFORT AVENUE FROM STELLA LINK ROAD TO BUFFALO SPEEDWAY
SOIL PARAMETERS FOR UNDERGROUND UTILITIES

Boring	Depth (ft)	Soil Type	γ (pcf)	γ' (pcf)	OSHA Type	E'n (psi)	Short-Term					Long-Term				
							C (psf)	φ (deg)	K_a	K_0	K_p	C' (psf)	φ' (deg)	K_a	K_0	K_p
B-5	0-4	Fill: very stiff CH	120	58	C	600	1500	0	1.00	1.00	1.00	150	16	0.57	0.72	1.76
	4-10	Very stiff CH	134	72	B	1000	2600	0	1.00	1.00	1.00	250	16	0.57	0.72	1.76
	10-15	Stiff to very stiff CH	123	61	B	600	1200	0	1.00	1.00	1.00	100	16	0.57	0.72	1.76
	15-25	Very stiff CL	131	69	B (15-20)	1000	2100	0	1.00	1.00	1.00	200	18	0.53	0.69	1.89

(1) γ = Unit weight for soil above water level, γ' = Buoyant unit weight for soil below water level. E'n = Soil modulus for native soils;

(2) C = Soil ultimate cohesion for short term (upper limit of 3,000 psf for design purposes), φ = Soil friction angle for short term;

(3) C' = Soil ultimate cohesion for long term (upper limit of 300 psf for design purposes), φ' = Soil friction angle for long term;

(4) K_a = Coefficient of active earth pressure, K_0 = Coefficient of at-rest earth pressure, K_p = Coefficient of passive earth pressure;

(5) CL = Lean Clay, CH = Fat Clay, CL-ML = Silty Clay; SM = Silty Sand;

(6) OSHA Soil Types for soils in the top 20 feet below grade:

A: cohesive soils with qu = 1.5 tsf or greater (qu = Unconfined Compressive Strength of the Soil)

B: cohesive soils with qu = 0.5 tsf or greater

C: cohesive soils with qu = less than 0.5 tsf, fill materials, or granular soil

C*: submerged cohesive soils; dewatered cohesive soils can be considered OSHA Type C.

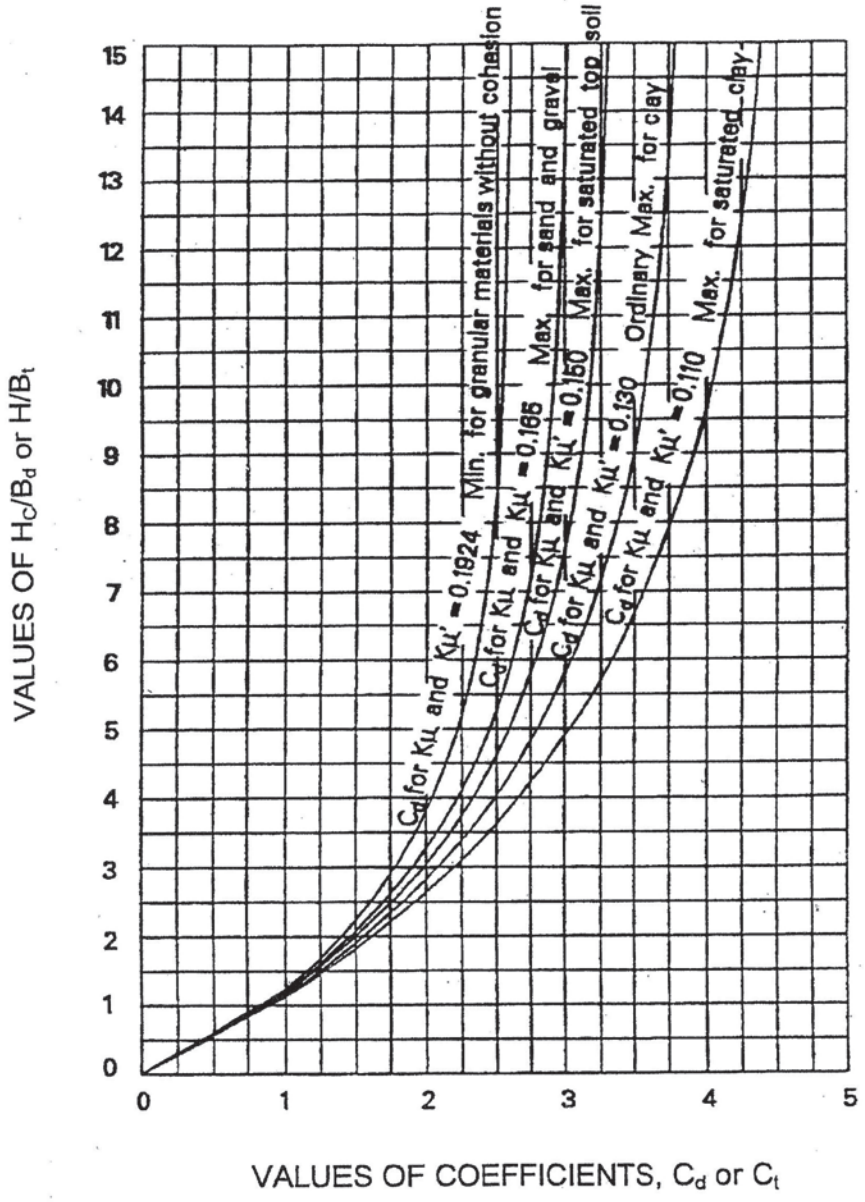

Reference: US Army Corps of Engineers Engineering Manual, EM 1110-2-2902, Oct. 31, 1997, Figure 2-5.

AVILES ENGINEERING CORP.

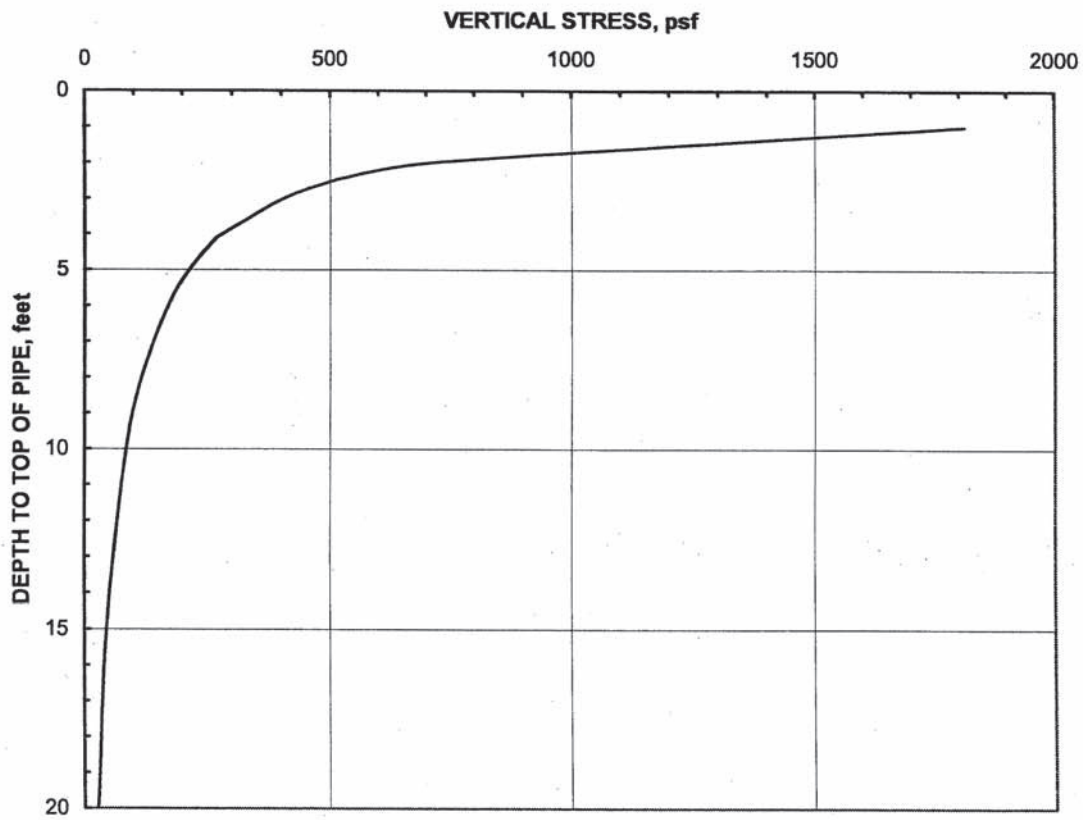

LIVE LOADS ON PIPE CROSSING UNDER ROADWAY

Note: 1. The vertical stress was estimated using AASHTO HS20 truck axle loadings on paved surfaces (Reference: ASCE 15-98, "Standard Practice for Direct Design of Buried Precast Concrete Pipe Using Standandard Installations").
2. Single truck passing.

AVILES ENGINEERING CORP.

APPENDIX D

Plate D-1	Critical Heights of Cut Slopes in Nonfissured Clays
Plate D-2	Maximum Allowable Slopes
Plate D-3	A Combination of Bracing and Open Cuts
Plate D-4	Lateral Pressure Diagrams for Open Cuts in Cohesive Soil-Long Term Conditions
Plate D-5	Lateral Pressure Diagrams for Open Cuts in Cohesive Soil-Short Term Conditions
Plate D-6	Lateral Pressure Diagrams for Open Cuts in Sand
Plate D-7	Bottom Stability for Braced Excavation in Clay
Plate D-8	Thrust Force Calculation
Plate D-9	Thrust Force Example Calculation
Plate D-10	Design Parameters for Bearing Thrust Block
Plate D-11	Relation between the Width of Surface Depression and Depth of Cavity for Tunnels
Plate D-12	Tunnel Behavior and TBM Selection
Plate D-13	Methods of Controlling Ground Water in Tunnel and Grouting Material Selection

AYLES ENGINEERING CORP.

Critical Heights of Cut Slopes in Nonfissured Clays

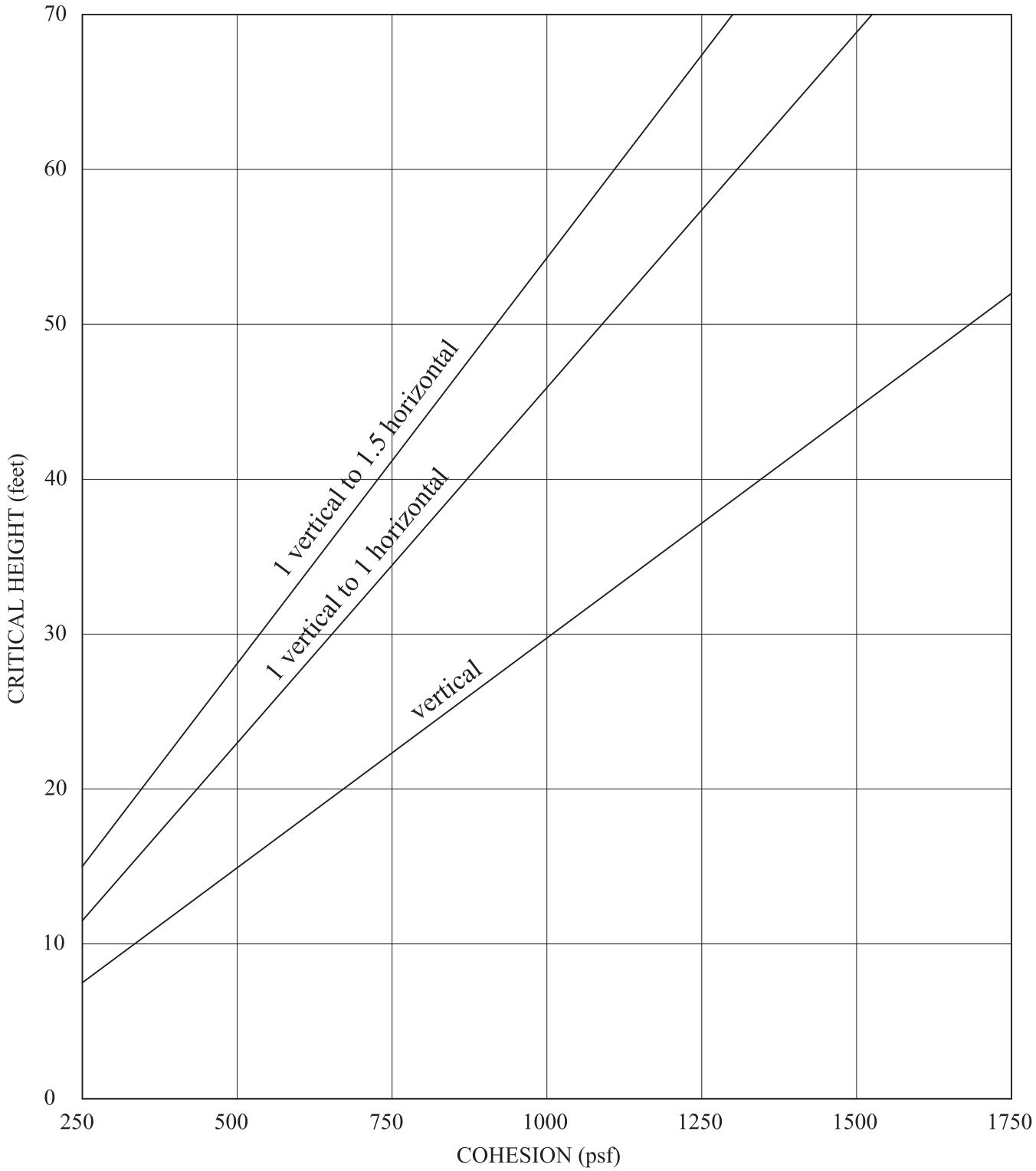

Note: The charts are calculated based on NAVFAC DM7.1, Page 7.1-319, assuming the critical circles are toe circles, and wet unit weight of soils = 125pcf.

AYLES ENGINEERING CORP.

MAXIMUM ALLOWABLE SLOPES

	SHORT TERM	LONG TERM
TYPE A SOILS	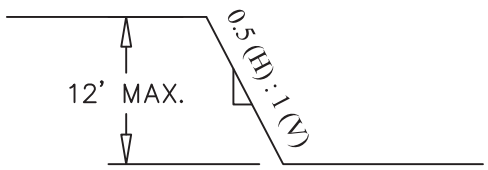	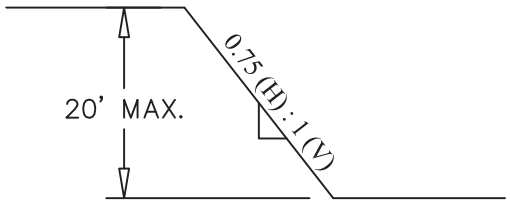
TYPE B SOILS	N/A	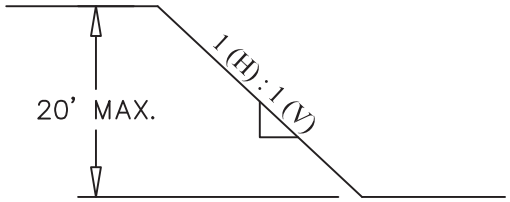
TYPE C SOILS	N/A	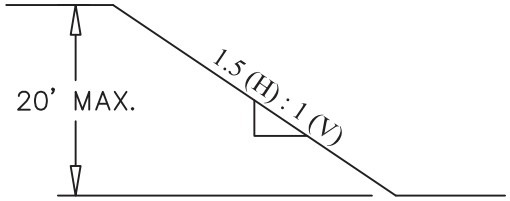

NOTES:

(1) For Type A soils, a short term maximum allowable slope of 0.5 (H) : 1 (V) is allowed in excavations that are 12 feet or less in depth; short term (24 hours or less) maximum allowable slopes for excavations greater than 12 feet in depth shall be 0.75 (H) : 1 (V).

(2) Maximum depth for above slopes is 20 feet. For slopes deeper than 20 feet, trench protection should be designed by the Contractor's professional engineer.

Reference: OSHA, Safety and Health Regulations for Construction, 1926 Subpart P.

A COMBINATION OF BRACING AND OPEN CUTS

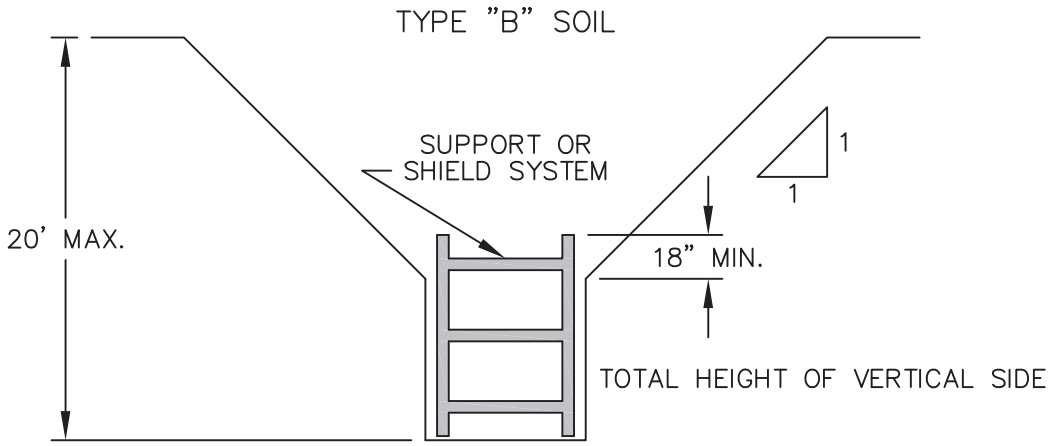

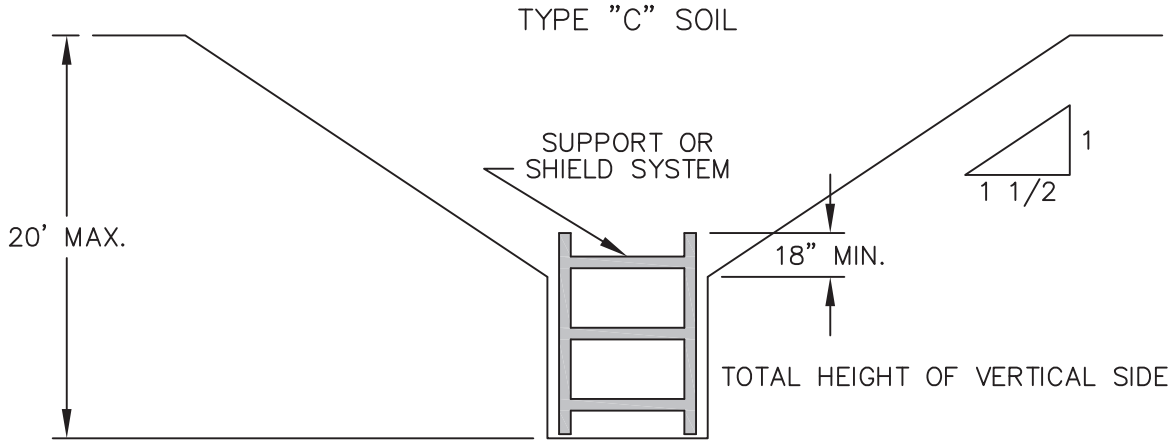

Reference: OSHA, Safety and Health Regulations for Construction, 1926 Subpart P.

AVILES ENGINEERING CORP.

LATERAL PRESSURE DIAGRAMS
FOR OPEN CUTS IN COHESIVE SOIL - LONG TERM CONDITIONS

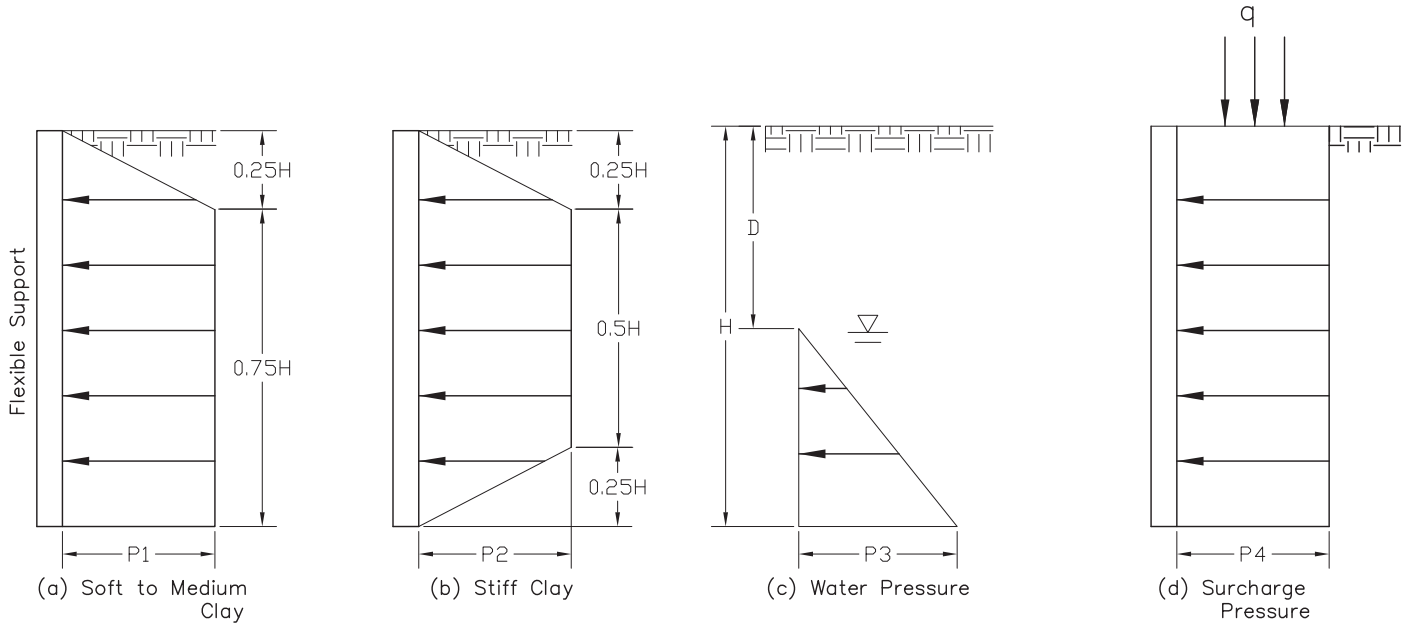

Empirical Pressure Distributions

Where:
H = Total excavation depth, feet
D = Depth to water table, feet
P1 = Lateral earth pressure = γH-4C, psf
P2 = Lateral earth pressure = 0.4γH, psf
P3 = Water pressure = γ_w (H-D), psf
P4 = Lateral earth pressure caused by surcharge = qK_a, psf
γ = Effective unit weight of soil, pcf
γ_w = Unit weight of water, pcf
C = Drained shear strength or cohesion, psf
K_a = Coefficient of active earth pressure

Notes:
1. All pressures are additive.
2. No safety factors are included.
3. For use only during long term construction.
4. If γH/C < 4, use section (b),
   If 4 < γH/C < 6, use larger of section (a) or (b),
   If γH/C > 6, use section (a).

Reference: Peck, R.B. (1969), "Deep Excavation and Tunneling in soft Ground", 7th ICSMFE, State of art volume, pp. 225-290.

AYLES ENGINEERING CORP.

LATERAL PRESSURE DIAGRAMS
FOR OPEN CUTS IN COHESIVE SOIL - SHORT TERM CONDITIONS

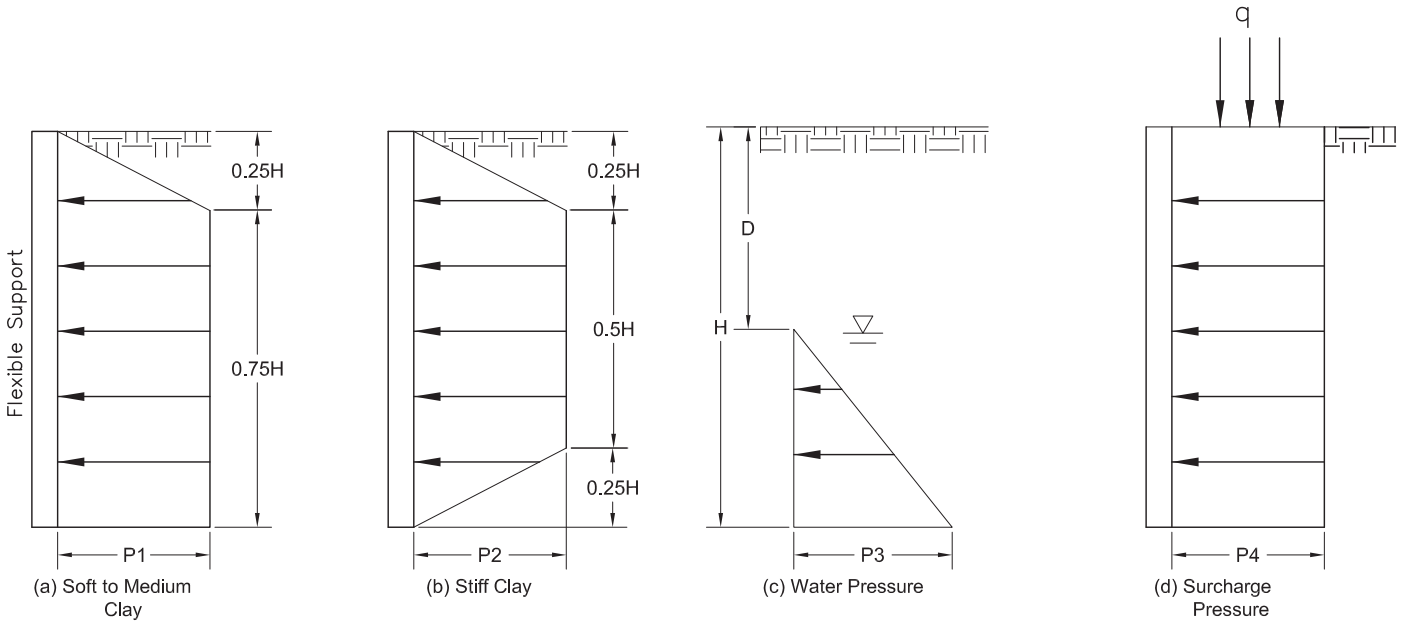

Empirical Pressure Distributions

Where:
H = Total excavation depth, feet
D = Depth to water table, feet
P1 = Lateral earth pressure = $\gamma H - 4S_u$, psf
P2 = Lateral earth pressure = $0.2\gamma H$, psf
P3 = Water pressure = γ_w (H-D), psf
P4 = Lateral earth pressure caused by surcharge = qK_a, psf
γ = Effective unit weight of soil, pcf
γ_w = Unit weight of water, pcf
S_u = Undrained shear strength = $q_u/2$, psf
q_u = Unconfined compressive strength, psf
K_a = Coefficient of active earth pressure

Notes:
1. All pressures are additive.
2. No safety factors are included.
3. For use only during short term construction.
4. If $\gamma H/S_u < 4$, use section (b),
   If $4 < \gamma H/S_u < 6$, use larger of section (a) or (b),
   If $\gamma H/S_u > 6$, use section (a).

Reference: Peck, R.B. (1969), "Deep Excavation and Tunneling in soft Ground", 7th ICSMFE, State of art volume, pp. 225-290.

AYLES ENGINEERING CORP.

LATERAL PRESSURE DIAGRAMS
FOR OPEN CUTS IN SAND

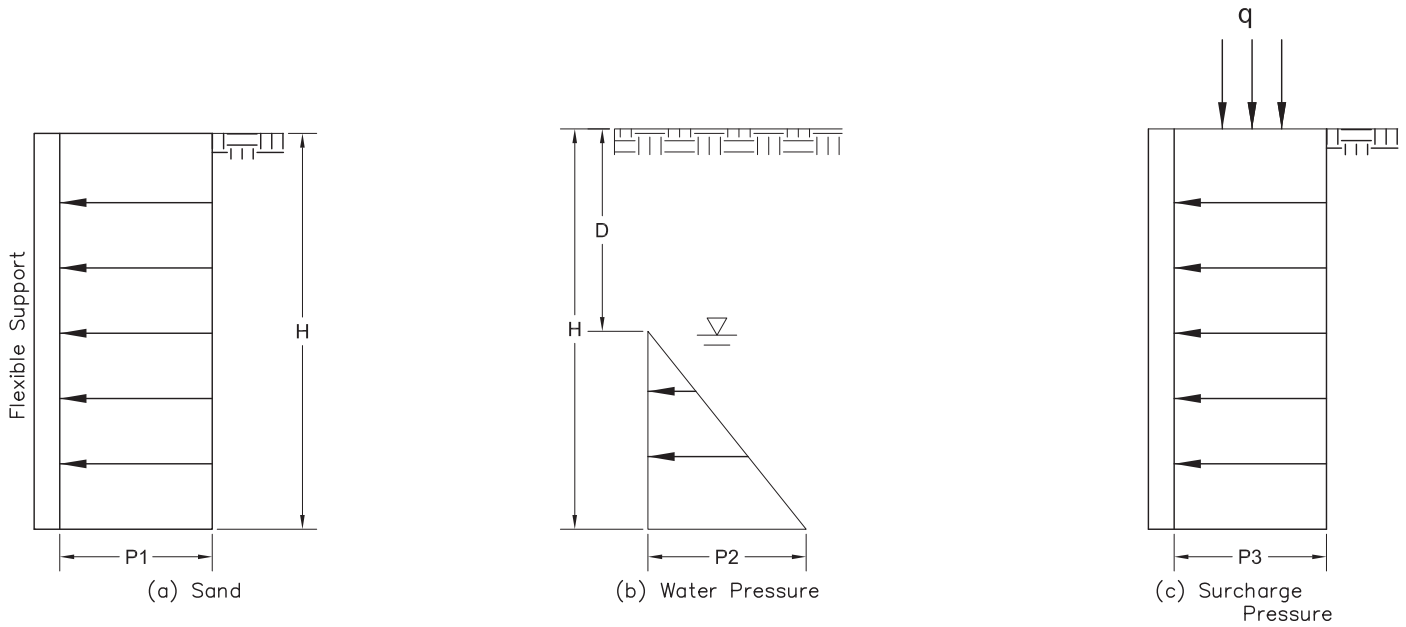

Empirical Pressure Distributions

Where:
H = Total excavation depth, feet
D = Depth to water table, feet
P1 = Lateral earth pressure = $0.65*\gamma HK_a$, psf
P2 = Water pressure = γ_w (H-D), psf
P3 = Lateral earth pressure caused by surcharge = qK_a, psf
γ = Effective unit weight of soil, pcf
γ_w = Unit weight of water, pcf
K_a = Coefficient of active earth pressure = $(1-\sin\varphi)/(1+\sin\varphi)$
φ = Drained friction angle

Notes:
1. All pressures are additive.
2. No safety factors are included.

Reference: Peck, R.B. (1969), "Deep Excavation and Tunneling in soft Ground", 7th ICSMFE, State of art volume, pp. 225-290.

BOTTOM STABILITY FOR BRACED EXCAVATION IN CLAY

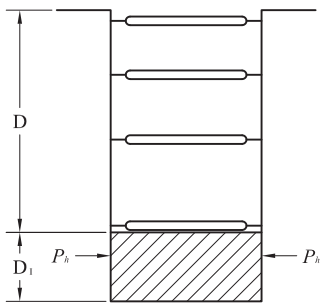

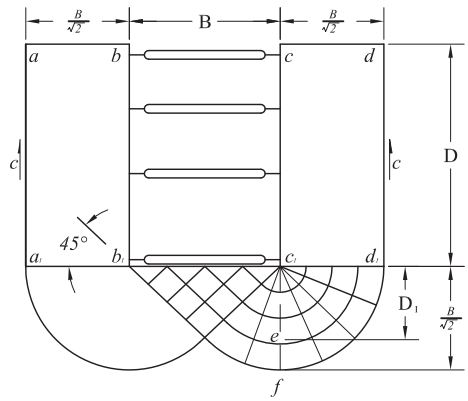

Factor of Safety against bottom of heave,

$$F.S = \frac{NcC}{(\gamma D+q)}$$

where, Nc = Coefficient depending on the dimension of the excavation (see Figure at the bottom)
C = Undrained shear strength of soil in zone immediately around the bottom of the excavation,
γ = Unit weight of soil,
D = Depth of excavation,
q = Surface surcharge.

If F.S < 1.5, sheeting should be extended further down to achieve stability

$$\textit{Depth of Buried Length, } (D_1) = \frac{1.5(\gamma D+q)-NcC}{(C/B)-0.5\gamma} \; ; D_1 \geq 5\ ft.$$

Pressure on buried length, P_h:

For $D_1 < 0.47B$; $P_h = 1.5\ D_1(\gamma D - 1.4\ CD/B - 3.14C)$

For $D_1 > 0.47B$; $P_h = 0.7\ (\gamma DB - 1.4\ CD - 3.14CB)$

where; B = width of excavation

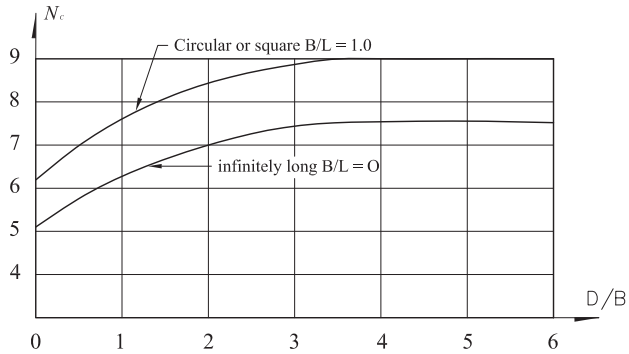

N_c rectangular = $(0.84 + 0.16B/L)N_c$ square

Reference: Bjerrum, L. and Eide, O., Stability of Strutted Excavations in Clay, Geotechnique, 6, 32-47 (1956).

THRUST FORCE CALCULATION

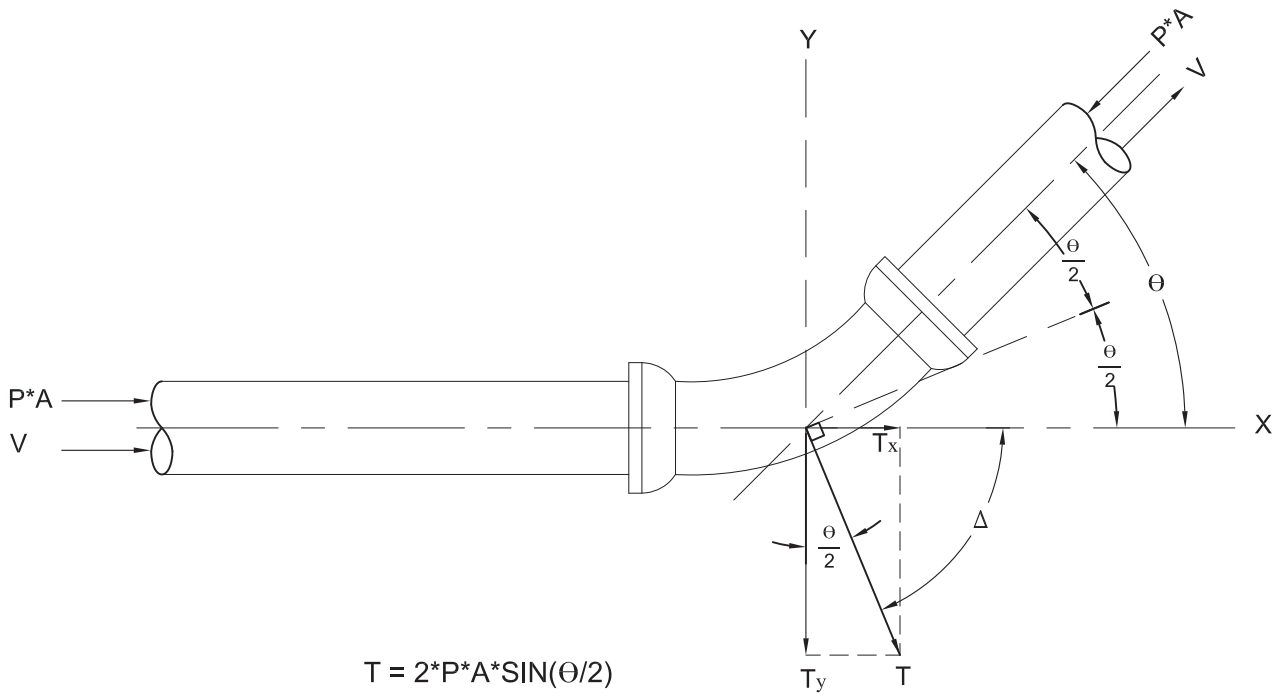

$T = 2*P*A*SIN(\Theta/2)$

$T_x = P*A*(1-COS\Theta)$

$T_y = P*A*SIN\Theta$

$\Delta = (90-\Theta/2)$

Where:

T = resultant thrust force

T_x= thrust force component along the X axis

T_y= thrust force component along the Y axis

P = maximum sustained pressure

A = cross-sectional area of pipe = $(\pi/4)*(D)^2$

D = inside diameter conduit

Θ = angle of bend

Δ = angle between X axis and T

V = fluid velocity

Reference: American Water Works Association, Manual MA, "Concrete Pressure Pipe".

THRUST FORCE EXAMPLE CALCULATION

Trust Force Example Calculation

$T = 2*P*A*SIN(\Theta/2)$

$T_x = P*A*SIN(1-COS\Theta)$

$T_y = P*A*SIN\ \Theta$

Where:

T = resultant thrust force

T_x = thrust force component along the X axis

T_y = thrust force component along the Y axis

P = maximum sustained pressure

A = cross-section area of pipe = $(\pi/4)*(D)^2$

D = inside diameter of conduit

U = angle of bend

Given: D = 24", P = 200 psi, $\Theta = 60°$

Find: T, T_x and T_y

$A = (\pi/4)*(24)^2 = 452.39\ in^2$

T = 2*200*452.39*SIN(60/2) = 90,478 lb

T_x = 200*452.39*(1-COS60) = 45,239 lb

T_y = 200*452.39*SIN60 = 78,356 lb

DESIGN PARAMETERS FOR BEARING THRUST BLOCK

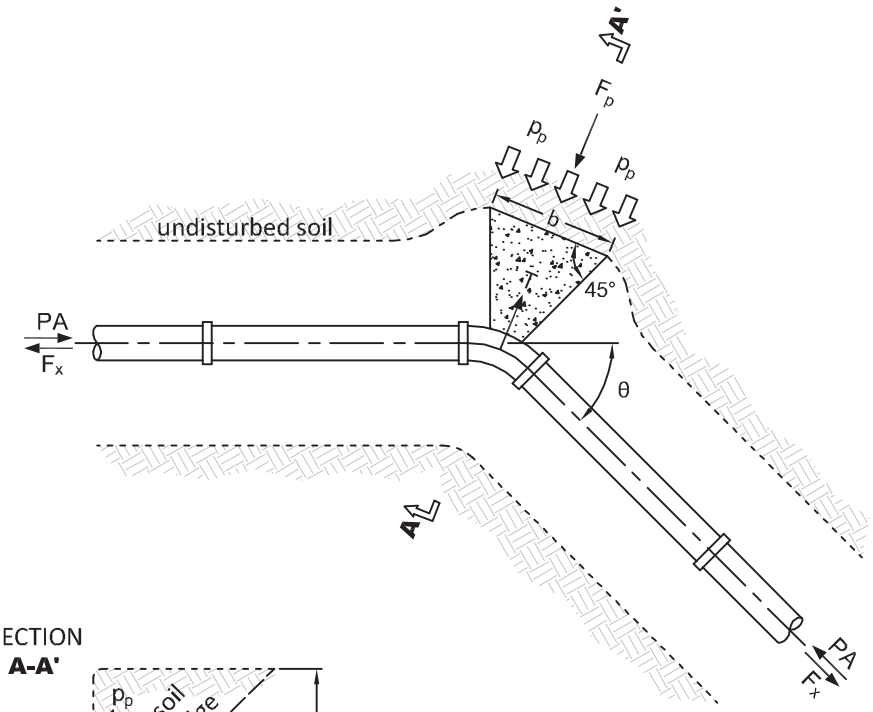

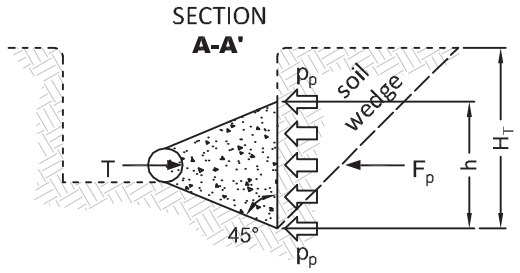

Required Bearing Area:

$$A_b = hb = \frac{F_s\, 2PA \sin\frac{\theta}{2}}{p_p}$$

Required Block Width:

$$b = \frac{2F_s\, PA \sin\frac{\theta}{2}}{h\, p_p}$$

Where:

$p_p = \Upsilon H_c K_p + 2C\sqrt{K_p}$

$K_p = \tan^2\left(45° + \frac{\varnothing}{2}\right)$

Where:

T = resultant thrust force on the bend

F_p = resistance force developed by passive soil pressure

A_b = minimum bearing area of block base

h = height of thrust block

b = width of thrust block

A = pipe cross-sectional area

θ = bend deflection angle

p_p = passive soil pressure

H_T = depth to bottom of block

Υ = soil unit weight

K_p = coefficient of passive earth pressure

$\varnothing$ = soil internal friction angle

C = soil cohesion

F_s = factor of safety (usually 1.5)

H_c = mean depth from ground surface to the plane of resistance (center of bearing area of a thrust block)

p = maximum sustained pressure

F_x = conduit frictional resistance per unit length

Relation between the Width of the Surface Depression (i/a) and the Depth of the Cavity (z/a) for Tunnels

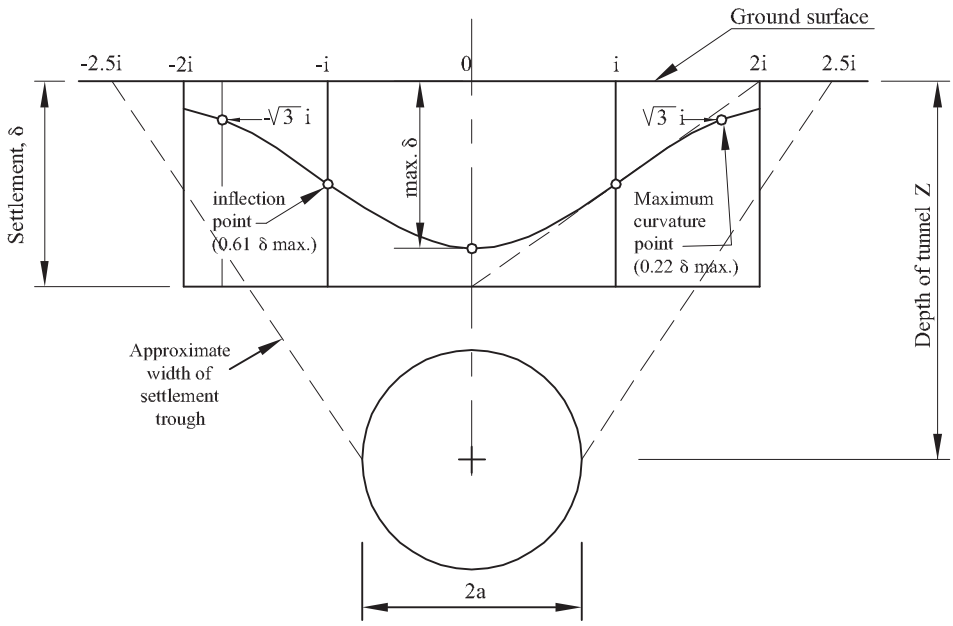

Volume of depression = 2.5i δ max.

(a)

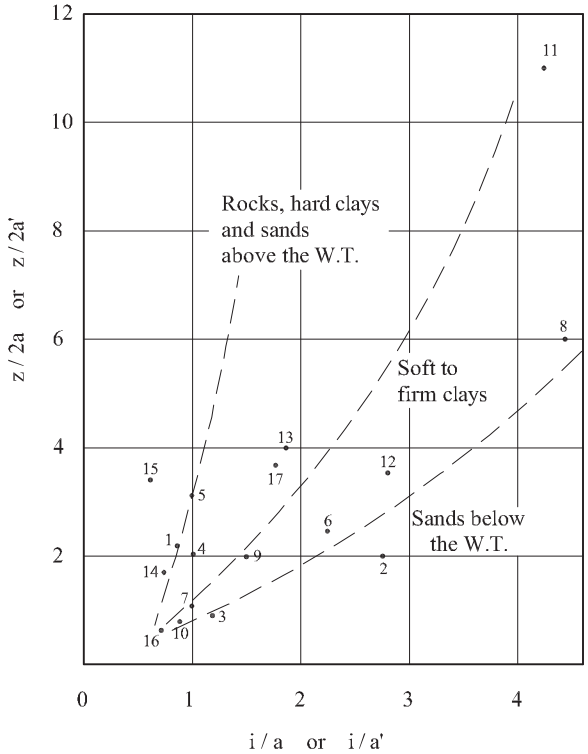

(b)

Reference: Peck, R. B. (1969) "Deep Excavations and Tunneling in Soft Ground," Proceedings, Seventh International Conference on Soil Mechanics and Foundation Engineering, Mexico City, State of the Art Volume, pp. 225-290.

AVILES ENGINEERING CORP.

Tunnel Behavior: Sands and Gravels
(Terzaghi, 1977)

Designation	Degree of Compactness	Tunnel Behavior	
		Above Water Table	Below Water Table
Very Fine Clean Sand	Loose, $N \leq 10$	Cohesive Running	Flowing
	Dense, $N > 30$	Fast Raveling	Flowing
Fine Sand with Clay Binder	Loose, $N \leq 10$	Rapid Raveling	Flowing
	Dense, $N > 30$	Firm or Slowly Raveling	Slowly Raveling
Sand or Sandy Gravel with Clay Binder	Loose, $N < 10$	Rapid Raveling	Rapidly Raveling or Flowing
	Dense, $N > 30$	Firm	Firm/slow Raveling
Sandy Gravel and Medium to Coarse Sand		Running Ground. Uniform ($C_u < 3$) and loose ($N < 10$) materials with round grains run much more freely than well graded ($C_u > 6$) and dense ($N > 30$) ones with angular grains.	Flowing Conditions combined with extremely heavy discharge of water.

TBM FAMILY OF MACHINES
(From Kessler & Moore,)

Machine Type	Typical Machine Diameters	Ground Condition TBM is Best Suited For
Pipe Jacking Machines	Up to approx. 10 – 13 ft (3 - 4m)	Any ground
Small Bore Unit (SBU)	Up to 6.6 ft (2m)	Any ground
Shielded TBMs	6.6 – 46 ft (2 to 14m) plus	Soft ground above the water table
Mix Face TBMs	6.6 – 46 ft (2 to 14m) plus	Mixed ground above the water table
Slurry TBMs	6.6 – 46 ft (2 to 14m) plus	Coarse-grained soft ground below the water table
EPB TBMs	6.6 – 46 ft (2 to 14m) plus	Fine-grained soft ground below the water table
Hard Rock TBMs	6.6 – 46 ft (2 to 14m) plus	Hard rock
Reamer TBMs	Various	Hard rock
Multi-head TBMs	Various	Various

Reference: Dots Oyenuga (2004), "FHWA Road Tunnel Design Guidelines", Pages 8 and 10, published by U.S. Department of Transportation Federal Highway Administration, Report No. FHWA-IF-05-023, Washington DC.

AVILES ENGINEERING CORP.

Methods of Controlling Groundwater
(after Karol, 1990)

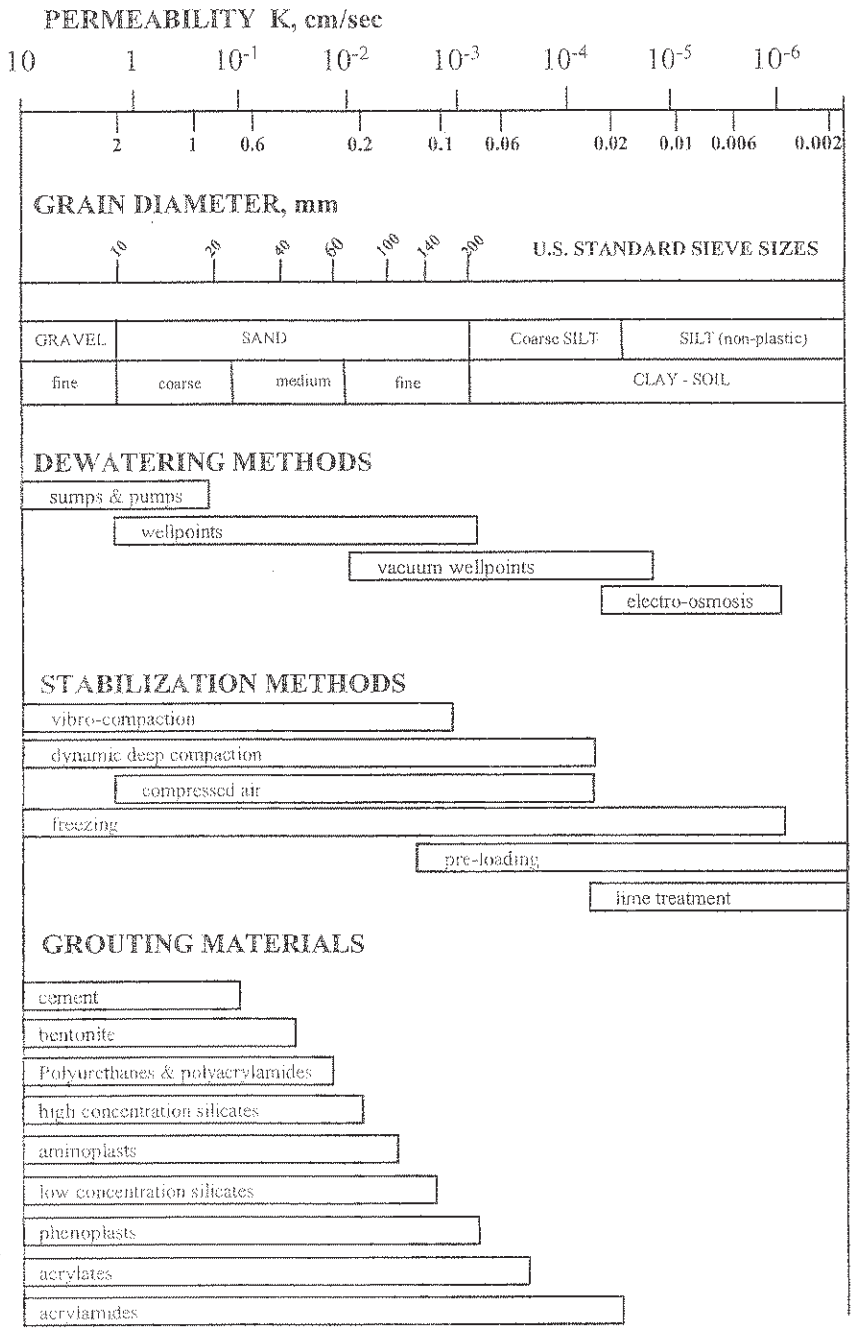

Note: 1 cm/sec = 0.4 in/sec; 1 mm = 0.04 in.

Reference: Dots Oyenuga (2004), "FHWA Road Tunnel Design Guidelines", Page 9, published by U.S. Department of Transportation Federal Highway Administration, Report No. FHWA-IF-05-023, Washington DC.

AVILES ENGINEERING CORP.

APPENDIX E

Plates E-1 to E-2 DARWin v3.0 Computer Program Output

1993 AASHTO Pavement Design

DARWin Pavement Design and Analysis System

A Proprietary AASHTOWare
Computer Software Product
Aviles Engineering Corporation

Rigid Structural Design Module

Rigid Structural Design

Pavement Type	JPCP
Slab Thickness for Performance Period Traffic	9 in
Initial Serviceability	4.5
Terminal Serviceability	2
28-day Mean PCC Modulus of Rupture	600 psi
28-day Mean Elastic Modulus of Slab	3,370,000 psi
Mean Effective k-value	91 psi/in
Reliability Level	95 %
Overall Standard Deviation	0.35
Load Transfer Coefficient, J	3.2
Overall Drainage Coefficient, Cd	1.2
18-kip ESALs Over Initial Performance Period	6,055,245

Effective Modulus of Subgrade Reaction

Period	Description	Roadbed Soil Resilient Modulus (psi)	Base Elastic Modulus (psi)
1	1	4,500	20,000

Base Type	-
Base Thickness	8 in
Depth to Bedrock	100 ft
Projected Slab Thickness	9 in
Loss of Support Category	1
Effective Modulus of Subgrade Reaction	91 psi/in

PLATE E-1

1993 AASHTO Pavement Design

DARWin Pavement Design and Analysis System

A Proprietary AASHTOWare
Computer Software Product
Aviles Engineering Corporation

Rigid Structural Design Module

Rigid Structural Design

Pavement Type	JPCP
Slab Thickness for Performance Period Traffic	10 in
Initial Serviceability	4.5
Terminal Serviceability	2
28-day Mean PCC Modulus of Rupture	600 psi
28-day Mean Elastic Modulus of Slab	3,370,000 psi
Mean Effective k-value	91 psi/in
Reliability Level	95 %
Overall Standard Deviation	0.35
Load Transfer Coefficient, J	3.2
Overall Drainage Coefficient, Cd	1.2
18-kip ESALs Over Initial Performance Period	11,929,423

Effective Modulus of Subgrade Reaction

Period	Description	Roadbed Soil Resilient Modulus (psi)	Base Elastic Modulus (psi)
1	1	4,500	20,000

Base Type	-
Base Thickness	8 in
Depth to Bedrock	100 ft
Projected Slab Thickness	9 in
Loss of Support Category	1
Effective Modulus of Subgrade Reaction	91 psi/in

PLATE E-2

AVILES ENGINEERING CORP.

APPENDIX F

Plate F-1 Piezometer Installation and Plugging Report

STATE OF TEXAS WELL REPORT for Tracking #382954

Owner:	**City of Houston Geotechnical Dept**	Owner Well #:	**pz-1**
Address:	**611 Walker Floor 14** **Houston , TX 77025**	Grid #:	**65-21-5**
Well Location:	**3250 W. Bellfort Ave** **Houston , TX 77025**	Latitude:	**29° 40' 29" N**
Well County:	**Harris**	Longitude:	**095° 25' 57" W**
Elevation:	**No Data**	GPS Brand Used:	**No Data**
Type of Work:	**New Well**	Proposed Use:	**Monitor**

Drilling Date: Started: **9/9/2014**
Completed: **9/9/2014**

Diameter of Hole: Diameter: **4 in From Surface To 40 ft**

Drilling Method: **Mud Rotary**

Borehole Completion: Other: **(No Data)**

Annular Seal Data: 1st Interval: **From 0 ft to 16 ft with 1.5 cement (#sacks and material)**
2nd Interval: **From 16 ft to 18 ft with .5 bentonite (#sacks and material)**
3rd Interval: **No Data**
Method Used: **No Data**
Cemented By: **No Data**
Distance to Septic Field or other Concentrated Contamination: **No Data**
Distance to Property Line: **No Data**
Method of Verification: **No Data**
Approved by Variance: **No Data**

Surface Completion: **Surface Slab Installed**

Water Level: Static level: **17 ft. below land surface on 9/5/2014**
Artesian flow: **No Data**

Packers: **20/40 18-30**

Plugging Info: Casing left in well: Cement/Bentonite left in well:
From (ft) To (ft) From (ft) To (ft) Cem/Bent Sacks Used
0-30 of 2" pvc grouted in place via tremmie method on 10/17/2012 using 11 gallons of cement grout.

Type Of Pump: **No Data**

Well Tests: **No Data**

Water Quality: Type of Water: **No Data**
Depth of Strata: **No Data**
Chemical Analysis Made: **No**
Did the driller knowingly penetrate any strata which contained undesirable constituents: **No**

Certification Data: The driller certified that the driller drilled this well (or the well was drilled

under the driller's direct supervision) and that each and all of the statements herein are true and correct. The driller understood that failure to complete the required items will result in the log(s) being returned for completion and resubmittal.

Company Information:	**Van and Sons Drilling Service** **319 John Alber** **Houston , TX 77076**
Driller License Number:	**2903**
Licensed Well Driller Signature:	**Eddie Van Antwerp**
Registered Driller Apprentice Signature:	**Refugio Flores**
Apprentice Registration Number:	**No Data**
Comments:	**Drilled and set by Refugio Flores** **Plugged by Elliot VanAntwerp**

IMPORTANT NOTICE FOR PERSONS HAVING WELLS DRILLED CONCERNING CONFIDENTIALITY

TEX. OCC. CODE Title 12, Chapter 1901.251, authorizes the owner (owner or the person for whom the well was drilled) to keep information in Well Reports confidential. The Department shall hold the contents of the well log confidential and not a matter of public record if it receives, by certified mail, a written request to do so from the owner.

Please include the report's Tracking number (Tracking #**382954**) on your written request.

Texas Department of Licensing & Regulation
P.O. Box 12157
Austin, TX 78711
(512) 463-7880

DESC. & COLOR OF FORMATION MATERIAL

From (ft)	To (ft)	Description
na		

CASING, BLANK PIPE & WELL SCREEN DATA

Dia.	New/Used	Type	Setting From/To
2	**n**	**sch 40 pvc riser**	**0-20**
2	**n**	**sch 40 pvc screen**	**21-30 .010**