ENGINEERING CORP.

GEOTECHNICAL INVESTIGATION

SURFACE WATER TRANSMISSION PROGRAM
24 INCH WATERLINE ALONG WEST AIRPORT BOULEVARD
FROM FONDREN ROAD TO BRAEWICK DRIVE
WBS NO. S-000900-0171-3
HOUSTON, TEXAS

Reported to:
Lockwood, Andrews, and Newnam, Inc.
Houston, Texas

by

Aviles Engineering Corporation
5790 Windfern
Houston, Texas 77041
713-895-7645

REPORT NO. G143-15

November 2015

5790 Windfern Road
Houston, Texas 77041
Tel: (713)-895-7645
Fax: (713)-895-7943

November 24, 2015

Mr. Jaipal Musku, P.E.
Lockwood, Andrews, and Newnam, Inc.
2925 Briarpark Drive, Suite 400
Houston, Texas 77042

Reference: **Geotechnical Investigation**
Surface Water Transmission Program
24 Inch Waterline along West Airport Blvd. from Fondren Rd. to Braewick Dr.
Houston, Texas
WBS No.: S-000900-0171-3
AEC Report No. G143-15

Dear Mr. Musku,

Aviles Engineering Corporation (AEC) is pleased to present this report of the results of our geotechnical investigation for the above referenced project. The project terms and conditions were in accordance with the Agreement between Engineer and Geotechnical Engineer for Professional Services between Lockwood, Andrews, and Newnam, Inc. (LAN) and AEC, dated July 1, 2015. Notice to proceed was provided via LAN Work Authorization No. 130-10667-117, dated July 22, 2015, based on AEC proposal G2015-05-03, dated May 8, 2015.

AEC appreciates the opportunity to be of service to you. Please call us if you have any questions or comments concerning this report or when we can be of further assistance.

Respectfully submitted,
Aviles Engineering Corporation
(TBPE Firm Registration No. F-42)

STATE OF TEXAS
WILBER L. WANG
99226
LICENSED
PROFESSIONAL ENGINEER

Wilber L. Wang, P.E.
Senior Engineer

Shou Ting Hu, M.S.C.E., P.E.
Principal Engineer

Reports Submitted: 3 Lockwood, Andrews, and Newnam, Inc.
1 File (electronic)

Z:\ENGINEERING\REPORTS\2015\143-15 SWTP WL ALONG W. AIRPORT FROM FONDREN TO BRAEWICK - LAN (WILBER)\G143-15 FINAL.DOCX

AVILES ENGINEERING CORP.

TABLE OF CONTENTS

EXECUTIVE SUMMARY i
1.0 INTRODUCTION 1
1.1 General 1
1.2 Purpose and Scope 1
2.0 SUBSURFACE EXPLORATION 2
2.1 Soil Borings 2
3.0 LABORATORY TESTING PROGRAM 3
4.0 SITE CONDITIONS 4
4.1 Subsurface Conditions 4
4.2 Hazardous Materials 7
4.3 Geologic Conditions 7
4.4 Subsurface Variations 7
5.0 GEOTECHNICAL ENGINEERING RECOMMENDATIONS 8
5.1 Geotechnical Parameters for Underground Utilities 8
5.2 Installation of Waterlines by Open-Cut Method 9
5.2.1 Loadings on Pipes 9
5.2.2 Trench Stability 10
5.2.3 Thrust Force Design Recommendations 13
5.2.4 Bedding and Backfill 14
5.3 Tunneling and Its Influence on Adjacent Structures 14
5.3.1 Tunnel Access Shafts 15
5.3.2 Tunnel Face Stability during Construction 17
5.3.2.1 General 17
5.3.2.2 Anticipated Ground Behavior 18
5.3.2.3 Influence of Tunneling on Existing Structures 19
5.3.3 Measures to Reduce Distress from Tunneling 19
5.3.4 Monitoring Existing Structures 20
5.4 Pavement Restoration 21
5.4.1 Rigid Pavement 23
5.4.2 Reinforcing Steel 25
5.4.3 Pavement Subgrade Preparation 25
6.0 CONSTRUCTION CONSIDERATIONS 26
6.1 Site Preparation 26
6.2 Groundwater Control 26
6.3 Construction Monitoring 27
6.4 Monitoring of Existing Structures 28
7.0 LIMITATIONS 28

AVILES ENGINEERING CORP.

APPENDICES

APPENDIX A

Plate A-1	Vicinity Map
Plate A-2	Boring Location Plan
Plates A-3 to A-8	Boring Logs
Plate A-9	Key to Symbols
Plate A-10	Classification of Soils for Engineering Purposes
Plate A-11	Terms Used on Boring Logs
Plate A-12	ASTM & TXDOT Designation for Soil Laboratory Tests
Plates A-13 to A-15	Summary of Lab Data

APPENDIX B

Plate B-1	Generalized Soil Profiles
Plates B-2 to B-3	Piezometer Installation Details

APPENDIX C

Plates C-1 to C-2	Recommended Geotechnical Design Parameters
Plate C-3	Load Coefficients for Pipe Loading
Plate C-4	Live Loads on Pipe Crossing Under Roadway

APPENDIX D

Plate D-1	Critical Heights of Cut Slopes in Nonfissured Clays
Plate D-2	Maximum Allowable Slopes
Plate D-3	A Combination of Bracing and Open Cuts
Plate D-4	Lateral Pressure Diagrams for Open Cuts in Cohesive Soil-Long Term Conditions
Plate D-5	Lateral Pressure Diagrams for Open Cuts in Cohesive Soil-Short Term Conditions
Plate D-6	Lateral Pressure Diagrams for Open Cuts in Sand
Plate D-7	Bottom Stability for Braced Excavation in Clay
Plate D-8	Thrust Force Calculation
Plate D-9	Thrust Force Example Calculation
Plate D-10	Design Parameters for Bearing Thrust Block
Plate D-11	Relation between the Width of Surface Depression and Depth of Cavity for Tunnels
Plate D-12	Tunnel Behavior and TBM Selection
Plate D-13	Methods of Controlling Ground Water in Tunnel and Grouting Material Selection

APPENDIX E

Plates E-1 to E-2	DARWin v3.0 Computer Program Output

APPENDIX F

Plates F-1 to F-3	Piezometer Installation and Plugging Reports

ENGINEERING CORP.

EXECUTIVE SUMMARY

The report submitted herein presents the results of Aviles Engineering Corporation's (AEC) geotechnical investigation for the City of Houston's (COH) Surface Water Transmission Program (SWTP) proposed 24 inch diameter waterline along West Airport Boulevard in Houston, Texas (Houston/Harris County Key Map Nos.: 570G and H). According to Lockwood, Andrews, and Newnam (LAN), approximately 3,460 linear feet of 24-inch diameter waterline will be installed along the westbound lanes of West Airport Boulevard between Fondren Road and Braewick Drive. The waterline will primarily be installed by open cut method, although tunnel method will be used where the waterline crosses Fondren Road and Harris County Flood Control District (HCFCD) Unit D140-05-01. Based on 90 percent complete plan and profile drawings (dated November 19, 2015), the invert depth of the waterline typically varies from 8.9 to 13.0 feet below grade, and is at 11.7 to 12.2 feet at the Fondren Road crossing, and 17.0 to 17.5 feet at the HCFCD Unit D140-05-01 crossing.

1. Existing Pavement Conditions: Existing concrete pavement in Borings B-1 through B-6 ranged from 6.5 to 12.5 inches thick. A summary of pavement thicknesses in the borings is presented on Table 2 in Section 4.0 of this report.

2. Subsurface Soil Conditions: Based on the borings, subsurface soil conditions along the project alignment generally consist of firm to hard fat clay (CH) from the ground surface to the boring termination depths. Approximately 2 to 4 feet of silt was encountered at a depth of 10 feet below grade in Borings B-5 and B-6.

3. Subsurface Soil Properties: The subsurface cohesive soils encountered in the borings have medium to very high plasticity, with liquid limits (LL) ranging from 38 to 99, and plasticity indices (PI) ranging from 24 to 71. The cohesive soils encountered are classified as "CL" and "CH" type soils and granular soils were classified as "ML" type soils in accordance with ASTM D 2487.

4. Groundwater Conditions: Groundwater was initially encountered in Borings B-5 and B-6 at a depth of 10 to 12 feet below grade during drilling, and subsequently rose to a depth between 7.0 and 8.6 feet approximately 15 minutes after the initial encounter. Where encountered, groundwater could be pressurized. Groundwater was not encountered in Borings B-1 through B-4 during drilling. A detailed description of ground water readings is presented on Table 4 in Section 4.1 of this report.

5. Hazardous Materials: No signs of visual staining or odors were encountered during field drilling or during processing of the soil samples in the laboratory.

6. Geologic Hazards: A desktop study of available literature indicates that there are no documented faults that cross the project alignment. However, the Pine Island fault and Blue Ridge Salt Dome is located approximately 3 miles to the southeast of the project alignment. Limited field observations were made along and adjoining the project alignment by AEC for evidences of faulting. No evidences of faulting were observed adjoining, in, or crossing the project alignment. AEC does not recommend any further fault studies for the project alignment.

EXECUTIVE SUMMARY (cont.)

7. Design parameters and recommendations for installation of underground utilities by open cut and tunnel methods are presented in Section 5.2 and 5.3 of this report. Based on the borings and the invert depths indicated on the plan and profile drawings provided by LAN, the majority of the storm sewer trench excavations in the vicinity of Borings B-1 through B-4) will encounter cohesive soils during construction; however, saturated silts and groundwater will be encountered within the trench/tunnel zone in the vicinity of Borings B-5 and B-6.

8. Design parameters and recommendations for construction of concrete pavement are presented in Section 5.4 of this report. AEC understands that only the traffic lane where the waterline trench excavations are located will be replaced. Based on the pavement thicknesses encountered in our borings, the majority of existing pavement does not meet the 9 inch minimum concrete pavement thickness required by the City of Houston's Infrastructure Design Manual. As a result, AEC recommends that the traffic lane above the waterline trench be reconstructed using a 9 inch thick concrete pavement surface with an 8 inch thick stabilized subgrade.

This Executive Summary is intended as a summary of the investigation and should not be used without the full text of this report.

GEOTECHNICAL INVESTIGATION

SURFACE WATER TRANSMISSION PROGRAM
24 INCH WATERLINE ALONG WEST AIRPORT BOULEVARD
FROM FONDREN ROAD TO BRAEWICK DRIVE
WBS NO. S-000900-0171-3
HOUSTON, TEXAS

1.0 INTRODUCTION

1.1 General

The report submitted herein presents the results of Aviles Engineering Corporation's (AEC) geotechnical investigation for the City of Houston's (COH) Surface Water Transmission Program (SWTP) proposed 24 inch diameter waterline along West Airport Boulevard in Houston, Texas (Houston/Harris County Key Map Nos.: 570G and H). A vicinity map is presented on Plate A-1, in Appendix A. According to Lockwood, Andrews, and Newnam (LAN), approximately 3,460 linear feet of 24-inch diameter waterline will be installed along the westbound lanes of West Airport Boulevard between Fondren Road and Braewick Drive. The waterline will primarily be installed by open cut method, although tunnel method will be used where the waterline crosses Fondren Road and Harris County Flood Control District (HCFCD) Unit D140-05-01. Based on 90 percent complete plan and profile drawings (dated November 19, 2015), the invert depth of the waterline typically varies from 8.9 to 13.0 feet below grade, and is at 11.7 to 12.2 feet at the Fondren Road crossing, and 17.0 to 17.5 feet at the HCFCD Unit D140-05-01 crossing.

AEC also understands that the existing 24 inch diameter waterline aerial crossing at HCFCD Unit D140-00-00 will remain in place. As a result, AEC's scope of service does not include recommendations for waterline bridge foundation replacements.

1.2 Purpose and Scope

The purpose of this geotechnical investigation is to evaluate the subsurface soil conditions along the alignment and develop geotechnical engineering recommendations for design and construction of underground utilities by open cut and tunnel method. The scope of this geotechnical investigation is summarized below:

1. Drilling and sampling six geotechnical borings ranging from 25 to 35 feet below existing grade;
2. Soil laboratory testing on selected soil samples;
3. Engineering analyses and recommendations for the installation of underground utilities by open cut method, including loadings on pipes, bedding, lateral earth pressure parameters, trench stability, and backfill requirements;
4. Engineering analyses and recommendations for the installation of waterlines by tunnel method, including tunnel access shafts, reaction walls, and tunnel stability;
5. Construction recommendations for installation of underground utilities by open cut and tunnel method.

2.0 SUBSURFACE EXPLORATION

2.1 Soil Borings

As directed by LAN, boring spacing and depth were selected in general accordance with the March 2014 COH SWTP geotechnical guidelines AND Chapter 11 of the COH Infrastructure Design Manual (IDM). In accordance with SWTP guidelines, this investigation will use a: (i) boring spacing of 1,000 feet; (ii) minimum boring depth of 25 feet; and (iii) piezometer spacing of 4,000 feet. Tunnel boring depths and boring sampling intervals will be in accordance with COH IDM guidelines.

The subsurface exploration consisted of drilling and sampling a total of six borings ranging from 25 to 35 feet below existing grade. The boring locations are shown on the Boring Location Plan on Plate A-2, in Appendix A. Total drilling footage is 180 feet. After completion of drilling, the boring locations were surveyed. Boring survey data (in Texas State Plane Coordinates) is presented on the boring logs. The boring designations and depths and corresponding waterline invert depths are presented in Table 1 below.

Table 1. Boring Number, Coordinates, and Depths

Boring/ PZ No.	Boring/ PZ Depth (ft)	Northing	Easting	Boring Surface Elevation (ft)	Invert Elevation near Boring (ft)	Invert Depth near Boring (ft)
B-1/ PZ-1	30/25	13800041.001	3077693.935	61.13	49.4 (24" WL tunnel)	11.7
B-2	30	13800050.094	3077900.963	61.55	49.4 (24" WL tunnel)	12.2
B-3	25	13800097.648	3078900.316	61.93	52.0 (24" WL)	9.9
B-4	25	13800142.263	3079871.130	59.62	48.0 (24" WL at San. Sewer crossing)	11.6

Boring/ PZ No.	Boring/ PZ Depth (ft)	Northing	Easting	Boring Surface Elevation (ft)	Invert Elevation near Boring (ft)	Invert Depth near Boring (ft)
B-5/ PZ-2	35/30	13800176.3850	3080893.2960	60.52	43.0 (24" WL tunnel)	17.5
B-6	35	13800184.9710	3081102.2180	60.08	43.0 (24" WL tunnel)	17.0

Existing concrete pavement at the boring locations was cored with a core barrel prior to arrival of the drill rig. The field drilling was performed with a truck-mounted drilling rig. Borings B-1 through B-4 were advanced using dry auger method, and Borings B-5 and B-6 were initially advanced using dry auger method, and then using wet rotary method once water-bearing granular soils were encountered. Undisturbed samples of cohesive soils were obtained from the borings by pushing 3-inch diameter thin-wall, seamless steel Shelby tube samplers in general accordance with ASTM D 1587. Granular soils were sampled with a 2-inch split-barrel sampler in accordance with ASTM D 1586. Standard Penetration Test resistance (N) values were recorded for the granular soils as "Blows per Foot" and are shown on the boring logs. Strength of the cohesive soils was estimated in the field using a hand penetrometer. The undisturbed samples of cohesive soils were extruded mechanically from the core barrels in the field and wrapped in aluminum foil; all samples were sealed in plastic bags to reduce moisture loss and disturbance. The samples were then placed in core boxes and transported to the AEC laboratory for testing and further study. Borings B-1 and B-5 were converted to piezometers upon completion of drilling. The remaining borings were grouted with cement-bentonite. The pavement surface was patched with non-shrink grout.

3.0 LABORATORY TESTING PROGRAM

Soil laboratory testing was performed by AEC personnel. Samples from the borings were examined and classified in the laboratory by a technician under the supervision of a geotechnical engineer. Laboratory tests were performed on selected soil samples in order to evaluate the engineering properties of the foundation soils in accordance with applicable ASTM Standards. Atterberg limits, moisture contents, percent passing a No. 200 sieve, mechanical sieve analysis, and dry unit weight tests were performed on typical samples to establish the index properties and confirm field classification of the subsurface soils. Strength properties of cohesive soils were determined by means of unconfined compression (UC) and undrained-unconsolidated (UU) triaxial tests performed on undisturbed samples. The test results are presented on the boring logs. Details of the soils encountered in the borings are presented on Plates A-3

through A-8, in Appendix A. A key to the boring logs, classification of soils for engineering purposes, terms used on boring logs, and reference ASTM Standards for laboratory testing are presented on Plates A-9 through A-12, in Appendix A. A summary of the laboratory test results is presented on Plates A-13 through A-15, in Appendix A.

4.0 SITE CONDITIONS

Based on our site visit, West Airport Boulevard between Fondren Road and Braewick Drive is currently a four lane (2 lanes in each direction) concrete roadway with a grass median. At the time of our site visit in July 31, 2015, AEC observed minor to severe transverse cracking and occasional spalling of the pavement joints. There were also locations where concrete panels had been either replaced, or patched with asphalt. More severe pavement cracking was observed where West Airport crossed HCFCD Unit D140-00-00. A summary of pavement types encountered in our borings is presented on Table 2.

Table 2. Existing Pavement Encountered at Pavement Borings

Boring No.	Pavement Section
B-1	12.5" Concrete, 8" crushed limestone gravel, sand, and clay (standing water encountered below pavement within base layer)
B-2	8.5" Concrete, 15.5" lime-stabilized crushed limestone and sand
B-3	7.5" Concrete
B-4	6.5" Concrete
B-5	8" Concrete
B-6	7.5" Concrete, 2" lime-stabilized clay with gravel

4.1 Subsurface Conditions

Details of the soils encountered during drilling are presented in the boring logs. Soil strata encountered in our borings are summarized below. A generalized subsurface profile along the project alignment is presented on Plate B-1, in Appendix B.

Boring	Depth (ft)	Description of Stratum
B-1	0 - 1.7	Pavement and base: see Table 2
	1.7 - 30	Firm to hard, Fat Clay (CH), with slickensides

Boring	Depth (ft)	Description of Stratum
B-2	0 - 2	Pavement and base: see Table 2
	2 - 30	Stiff to hard, Fat Clay (CH), with slickensides
B-3	0 - 0.6	Pavement and base: see Table 2
	0.6 - 2	Fill: firm to stiff, lime-stabilized Fat Clay (CH)
	2 - 25	Firm to hard, Fat Clay (CH), with slickensides
B-4	0 - 0.5	Pavement and base: see Table 2
	0.5 - 25	Firm to hard, Fat Clay (CH), with slickensides
B-5	0 - 0.7	Pavement and base: see Table 2
	0.7 - 10	Stiff to very stiff, Fat Clay (CH), with slickensides
	10 - 12	Loose, Sandy Silt (ML), with clay and sand pockets
	12 - 35	Stiff to hard, Fat Clay (CH), with slickensides
B-6	0 - 0.8	Pavement and base: see Table 2
	0.8 - 8	Firm to very stiff, Fat Clay (CH), with slickensides
	8 - 10	Very stiff, Sandy Lean Clay (CL), with fat clay partings
	10 - 14	Loose, Silt (ML), with fat clay pockets
	14 - 22	Stiff to hard, Fat Clay (CH), with slickensides
	22 - 28	Stiff to hard, Fat Clay w/Sand (CH)
	28 - 35	Very stiff to hard, Fat Clay (CH)

A summary of granular soils encountered in the borings is presented in Table 3.

Table 3. Granular Soils Encountered in Borings

Boring	Depth to Granular Soil	Soil Type
B-5	10 to 12	Loose, Sandy Silt (ML)
B-6	10 to 14	Loose, Silt (ML)

Subsurface Soil Properties: The subsurface cohesive soils encountered in the borings have medium to very high plasticity, with liquid limits (LL) ranging from 38 to 99, and plasticity indices (PI) ranging from 24 to 71. The cohesive soils encountered are classified as "CL" and "CH" type soils and granular soils were classified as "ML" type soils in accordance with ASTM D 2487. High plasticity clays can undergo significant volume changes due to seasonal changes in moisture contents. "CH" soils undergo significant volume changes due to seasonal changes in soil moisture contents. "CL" type soils with lower LL (less than 40) and PI (less than 20) generally do not undergo significant volume changes with changes in moisture content. However, "CL" soils with LL approaching 50 and PI greater than 20 essentially behave as "CH" soils and could undergo significant volume changes.

Groundwater Conditions: Groundwater was initially encountered in Borings B-5 and B-6 at a depth of 10 to 12 feet below grade during drilling, and subsequently rose to a depth between 7.0 and 8.6 feet approximately 15 minutes after the initial encounter. Where encountered, groundwater could be pressurized. Groundwater was not encountered in Borings B-1 through B-4 during drilling. After completion of drilling, Borings B-1 and B-5 were converted to piezometers. Piezometer installation details are presented on Plates B-2 and B-3, in Appendix B. Detailed groundwater levels are summarized in Table 4. AEC notes that roadway construction was underway in the area at the time Piezometer PZ-1 was installed. When AEC returned on October 15, 2015, the roadway where Piezometer PZ-1 was located had been reconstructed, and new pavement was placed over the piezometer cap. As a result, AEC was not able to obtain further readings or plug and abandon Piezometer PZ-1. Piezometer installation and plugging reports are presented in Plates F-1 through F-3, in Appendix F.

Table 4. Groundwater Depths below Existing Ground Surface

Boring/PZ No.	Date Drilled	Boring/PZ Depth (ft)	Groundwater Depth (ft)	Groundwater Depth in Piezometer (ft)
B-1/PZ-1	8/25/15	30/25	Dry[(a)] (Drilling)	1.3 (8/27/15) n/a[(b)] (10/15/15)
B-2	8/25/15	30	Dry (Drilling)	-
B-3	8/26/15	25	Dry (Drilling)	-
B-4	8/25/15	25	Dry (Drilling)	-
B-5/PZ-2	8/24/15	35/30	10 (Drilling) 7.0 (1/4 Hr.)	4.7 (8/27/15) 6.0 (10/15/15) 4.8 (11/23/15)
B-6	8/24/15	35	12 (Drilling) 8.6 (1/4 Hr.)	-

Note: (a) Standing water was encountered in the base layer below the pavement, although groundwater was not encountered in the remainder of the boring during drilling;
(b) Piezometer was destroyed by construction; water reading could not be obtained.

The information in this report summarizes conditions found on the dates the borings were drilled. It should be noted that our groundwater observations are short-term; groundwater depths and subsurface soil moisture contents will vary with environmental variations such as frequency and magnitude of rainfall and the time of year when construction is in progress.

4.2 Hazardous Materials

No signs of visual staining or odors were encountered during field drilling or during processing of the soil samples in the laboratory.

4.3 Geologic Conditions

AEC performed a preliminary fault investigation, which included a review of available literature, aerial photographs, public maps, and limited field observations. According to the published maps "*Principal Active Faults of the Houston Area (after O'Neill and Van Siclen, May 1984)*", and "*Principal Faults in the Houston, Texas, Metropolitan Area (Shah and Lanning-Rush 2005)"*, no documented faults cross the project alignment. However, the Pine Island fault and Blue Ridge Salt Dome is located approximately 3 miles to the southeast of the project alignment.

Limited field observations were made along and adjoining the project alignment by AEC for evidences of faulting. No evidences of faulting were observed adjoining, in, or crossing the project alignment. AEC does not recommend any further fault studies for the project alignment.

Limitations: The preliminary fault investigation provided in this report is limited to a review of literature, aerial photographs and maps and our limited field observations, and distances are scaled from maps. Faults may exist in the project area or surrounding area due to the following reasons: not observed during the reconnaissance due to limitations of the scope of work and cost; the presence of obscuring vegetation and environmental features; modification of the land surface by human activities; and lack of documentation in the literature. Faults may also be present below ground but do not currently have surface expressions. Identification of these faults is beyond the scope of work for this project. The observations made during the fault reconnaissance represent conditions at the time of the reconnaissance.

4.4 Subsurface Variations

It should be emphasized that: (i) at any given time, groundwater depths can vary from location to location, and (ii) at any given location, groundwater depths can change with time. Groundwater depths will vary

with seasonal rainfall and other climatic/environmental events. Subsurface conditions may vary away from and in between the boring locations.

Clay soils in the Houston area typically have secondary features such as slickensides or siltstone fragments, and contain sand/silt seams/lenses/layers/pockets. It should be noted that the information in the boring logs is based on 3-inch diameter soil samples. In Borings B-3 and B-4, soil samples were obtained continuously at intervals of 2 feet from the ground surface to a depth of 20 feet, then at intervals of 5 feet thereafter to the boring termination depth of 25 feet. In Borings B-1 and B-2, soil samples were obtained continuously at intervals of 2 feet from the ground surface to a depth of 26 feet, then at intervals of 5 feet thereafter to the boring termination depth of 30 feet. In Borings B-5 and B-6, soil samples were obtained continuously at intervals of 2 feet from the ground surface to a depth of 30 feet, then at intervals of 5 feet thereafter to the boring termination depth of 35 feet. A detailed description of the soil secondary features may not have been obtained due to the small sample size and sampling interval between the samples. Therefore, while a boring log shows some soil secondary features, it should not be assumed that the features are absent where not indicated on the boring logs.

5.0 GEOTECHNICAL ENGINEERING RECOMMENDATIONS

According to LAN, approximately 3,460 linear feet of 24-inch diameter waterline will be installed along the westbound lanes of West Airport Boulevard between Fondren Road and Braewick Drive. The waterline will primarily be installed by open cut method, although tunnel method will be used where the waterline crosses Fondren Road and Harris County Flood Control District (HCFCD) Unit D140-05-01. Based on 90 percent complete plan and profile drawings (dated November 19, 2015), the invert depth of the waterline typically varies from 8.9 to 13.0 feet below grade, and is at 11.7 to 12.2 feet at the Fondren Road crossing, and 17.0 to 17.5 feet at the HCFCD Unit D140-05-01 crossing.

5.1 Geotechnical Parameters for Underground Utilities

Recommended geotechnical parameters for the subsurface soils along the alignment to be used for design of waterlines are presented on Plates C-1 and C-2, in Appendix C. The design values are based on the results of field and laboratory test data on individual boring logs as well as our experience. It should be noted that because of the variable nature of soil stratigraphy, soil types and properties along the alignment or at

locations away from a particular boring may vary substantially.

5.2 Installation of Waterlines by Open-Cut Method

Waterlines installed by open-cut methods should be designed and installed in accordance with Section 02511 of the latest edition of the City of Houston Standard Construction Specifications (COHSCS).

5.2.1 Loadings on Pipes

Underground utilities support the weight of the soil and water above the crown, as well as roadway traffic and any structures that exist above the utilities.

Earth Loads: For underground utilities to be installed using open cut methods, the vertical soil load W_e can be calculated as the larger of the two values from Equations (1) and (3):

$$W_e = C_d \gamma B_d^2 \quad \text{.....Equation (1)}$$

$$C_d = [1 - e^{-2K\mu'(H/B_d)}]/(2K\mu') \quad \text{.....Equation (2)}$$

$$W_e = \gamma B_c H \quad \text{.....Equation (3)}$$

where:
- W_e = trench fill load, in pounds per linear foot (lb/ft);
- C_d = trench load coefficient, see Plate C-3, in Appendix C;
- γ = effective unit weight of soil over the conduit, in pounds per cubic foot (pcf);
- B_d = trench width at top of the conduit < 1.5 B_c (ft);
- B_c = outside diameter of the conduit (ft);
- H = variable height of fill (ft);
  when the height of fill above the top of the conduit H_c >2 B_d, $H = H_h$ (height of fill above the middle of the conduit). When H_c < 2 B_d, H varies over the height of the conduit; and
- $K\mu'$ = 0.1650 maximum for sand and gravel,
  0.1500 maximum for saturated top soil,
  0.1300 maximum for ordinary clay,
  0.1100 maximum for saturated clay.

When underground conduits are located below groundwater, the total vertical dead loads should include the weight of the projected volume of water above the conduits.

Traffic Loads: The vertical stress on top of an underground conduit, p_L (psf), resulting from traffic loads (from a HS-20 truck) can be obtained from Plate C-4, in Appendix C. The live load on top of the underground conduit can be calculated from Equation (4):

$$W_L = p_L B_c \qquad \text{.....Equation (4)}$$

where: W_L = live load on the top of the conduit (lb/ft);
p_L = vertical stress (on the top of the conduit) resulting from traffic loads (psf);
B_c = outside diameter of the conduit, (ft);

Lateral Loads: The lateral soil pressure p_l can be calculated from Equation (5); hydrostatic pressure should be added, if applicable.

$$p_l = 0.5\,(\gamma H_h + p_s) \qquad \text{.....Equation (5)}$$

where: H_h = height of fill above the center of the conduit (ft);
γ = effective unit weight of soil over the conduit (pcf);
p_s = vertical pressure on conduit resulting from traffic and/or construction equipment (psf).

5.2.2 Trench Stability

Cohesive soils in the Houston area contain many secondary features which affect trench stability, including sand seams and slickensides. Slickensides are shiny weak failure planes which are commonly present in fat clays; such clays often fail along these weak planes when they are not laterally supported, such as in an open excavation. The Contractor should not assume that slickensides and sand seams/layers/pockets are absent where not indicated on the logs.

The Contractor should be responsible for designing, constructing and maintaining safe excavations. The excavations should not cause any distress to existing structures.

Trenches 20 feet and Deeper: The Occupational Safety and Health Administration (OSHA) requires that shoring or bracing for trenches 20 feet and deeper be specifically designed by a licensed professional engineer.

Trenches Less than 20 Feet Deep: Trench excavations that are less than 20 feet deep may be shored, sheeted and braced, or laid back to a stable slope for the safety of workers, the general public, and adjacent structures, except for excavations which are less than 5 feet deep and verified by a competent person to

have no cave-in potential. The excavation and trenching should be in accordance with OSHA Safety and Health Regulations, 29 CFR, Part 1926. Recommended OSHA soil types for trench design for existing soils can be found on Plates C-1 and C-2, in Appendix C. Fill soils are considered OSHA Class 'C'; submerged cohesive soils should also be considered OSHA Class 'C', unless they are dewatered first.

Critical Height is defined as the height a slope will stand unsupported for a short time; in cohesive soils, it is used to estimate the maximum depth of open-cuts at given side slopes. Critical Height may be calculated based on the soil cohesion. Values for various slopes and cohesion are shown on Plate D-1, in Appendix D. Cautions listed below should be exercised in use of Critical Height applications:

1. No more than 50 percent of the Critical Height computed should be used for vertical slopes. Unsupported vertical slopes are not recommended where granular soils or soils that will slough when not laterally supported are encountered within the excavation depth.

2. If the soil at the surface is dry to the point where tension cracks occur, any water in the crack will increase the lateral pressure considerably. In addition, if tension cracks occur, no cohesion should be assumed for the soils within the depth of the crack. The depth of the first waler should not exceed the depth of the potential tension crack. Struts should be installed before lateral displacement occurs.

3. Shoring should be provided for excavations where limited space precludes adequate side slopes, e.g., where granular soils will not stand on stable slopes and/or for deep open cuts.

4. All excavation, trenching and shoring should be designed and constructed by qualified professionals in accordance with OSHA requirements.

The maximum (steepest) allowable slopes for OSHA Soil Types for excavations less than 20 feet are presented on Plate D-2, in Appendix D.

If limited space is available for the required open trench side slopes, the space required for the slope can be reduced by using a combination of bracing and open cut as illustrated on Plate D-3, in Appendix D. Guidelines for bracing and calculating bracing stress are presented below.

<u>Computation of Bracing Pressures:</u> The following method can be used for calculating earth pressure against bracing for open cuts. Lateral pressure resulting from construction equipment, traffic loads, or other surcharge should be taken into account by adding the equivalent uniformly distributed surcharge to the design lateral pressure. Hydrostatic pressure, if any, should also be considered. The active earth pressure at

depth z can be determined by Equation (6). The design soil parameters for trench bracing design are presented on Plates C-1 and C-2, in Appendix C.

$$p_a = (q_s + \gamma h_1 + \gamma' h_2) K_a - 2c\sqrt{K_a} + \gamma_w h_2 \qquad \text{.....Equation (6)}$$

where:
- p_a = active earth pressure (psf);
- q_s = uniform surcharge pressure (psf);
- γ γ' = wet unit weight and buoyant unit weight of soil (pcf);
- h_1 = depth from ground surface to groundwater table (ft);
- h_2 = $z-h_1$, depth from groundwater table to the point under consideration (ft);
- z = depth below ground surface for the point under consideration (ft);
- K_a = coefficient of active earth pressure;
- c = cohesion of clayey soils (psf); c can be omitted conservatively;
- γ_w = unit weight of water, 62.4 pcf.

Pressure distribution for the practical design of struts in open cuts for clays and sands are illustrated on Plates D-4 through D-6, in Appendix D.

Bottom Stability: In open-cuts, it is necessary to consider the possibility of the bottom failing by heaving, due to the removal of the weight of excavated soil. Heaving typically occurs in soft plastic clays when the excavation depth is sufficiently deep enough to cause the surrounding soil to displace vertically due to bearing capacity failure of the soil beneath the excavation bottom, with a corresponding upward movement of the soils in the bottom of the excavation. In fat and lean clays, heave normally does not occur unless the ratio of Critical Height to Depth of Cut approaches one. In very sandy and silty lean clays and granular soils, heave can occur if an artificially large head of water is created due to installation of impervious sheeting while bracing the cut. This can be mitigated if groundwater is lowered below the excavation by dewatering the area. Guidelines for evaluating bottom stability in clay soils are presented on Plate D-7, in Appendix D.

Based on the invert depths presented on Table 1 in Section 2.1 of this report and the depth to granular soils presented on Table 3 in Section 4.1 of this report, AEC anticipates that open cut excavations will encounter granular soils and groundwater within the trench or pipe bedding zone in the vicinity of Borings B-5 and B-6. If the excavation extends below groundwater and the soils at or near the bottom of the excavation are mainly sands or silts, the bottom can fail by blow-out (boiling) when a sufficient hydraulic head exists. The

potential for boiling or in-flow of granular soils increases where the groundwater is pressurized. To reduce the potential for boiling of excavations terminating in granular soils below pressurized groundwater, the groundwater table should be lowered at least 5 feet below the excavation in accordance with Section 01578 of the latest edition of the City of Houston Standard General Requirement (COHSGR).

Calcareous nodules, silt/sand seams, and fat clays with slickensides were encountered in some of the borings. These secondary structures may become sources of localized instability when they are exposed during excavation, especially when they become saturated. Such soils have a tendency to slough or cave in when not laterally confined, such as in trench excavations. The Contractor should be aware of the potential for cave-in of the soils. Low plasticity soils (silts and clayey silts) will lose strength and may behave like granular soils when saturated.

5.2.3 Thrust Force Design Recommendations

Thrust forces are generated in pressure pipes, typically as a result of changes in pipe diameter, pipe direction or at the termination point of the pipes. The pipes could disengage at the joints if the forces are not balanced and if the pipe restraint is not adequate. Various methods of thrust restraint are used including thrust blocks, restrained joints, encasement, and tie-rods.

Thrust restraint design procedure based on the 2008 American Water Works Association (AWWA) Manuals "Pressurized Concrete Pipe (M9)" and "Steel Water Pipe (M11)" is discussed below. Plate D-8, in Appendix D shows the force diagram generated by flow in a bend in a pipe and also gives the equation for computing the thrust force. An example computation of a thrust force for a given surge pressure and a bend angle is presented on Plate D-9, in Appendix D.

Frictional Resistance: The unbalanced force due to changes in grade and alignment can be resisted by frictional force F_R, between the pipe and the surrounding soil. The resisting frictional force per linear foot of pipe against soil can be calculated from Equation (7):

$$F_R = f\,(2W_e + W_w + W_p) \qquad \text{.....Equation (7)}$$

where: f = Coefficient of friction between pipe and soil;
W_e = Weight of soil over pipe (lb/ft);
W_w = Weight of water inside the pipe (lb/ft);
W_p = Weight of pipe (lb/ft).

The value of the frictional resistance depends on the material in contact with the backfill and the soil used in the backfill. For a ductile iron pipe or steel pipe with crushed stone or compacted sand backfill, an allowable coefficient of friction of 0.3 can be used. To account for submerged conditions, a soil unit weight of 60 pcf should be used to compute the weight of compacted backfill on the pipe.

Thrust Blocks: Thrust blocks utilize passive earth pressures to resist forces generated by changes in direction or diameter of pressurized pipes. Passive earth pressure can be calculated using Equation (8); we recommend that a factor safety of 2.0 be used when using passive earth pressure for design of thrust blocks. The design soil parameters for thrust block design are presented on Plates C-1 and C-2, in Appendix C. Design parameters for bearing thrust blocks are presented on Plate D-10, in Appendix D.

$$p_p = \gamma z K_p + 2c(K_p)^{1/2} \qquad \text{.....Equation (8)}$$

where, p_p = passive earth pressure (psf);
γ = wet unit weight of soil (pcf);
z = depth below ground surface for the point under consideration (ft);
K_p = coefficient of passive earth pressure;
c = cohesion of clayey soils (psf).

5.2.4 Bedding and Backfill

Trench excavation, pipe embedment material, and backfill for the proposed waterlines should be in general accordance with Section 02317 of the latest edition of the COHSCS.

5.3 Tunneling and Its Influence on Adjacent Structures

The Contractor is responsible for designing, constructing, implementing, and monitoring safe tunneling excavation and protecting existing structures in the vicinity from adverse effects resulting from construction, and retaining professionals who are qualified and experienced to perform the tasks and who are capable of modifying the system, as required. The following discussion provides general guidelines to

the Contractor.

Based on the plan and profile drawings provided by LAN (dated November 19, 2015), the proposed 24 inch diameter waterline will be installed by tunnel method where the alignment crosses beneath Fondren Road and HCFCD Unit D140-05-01; the alignment stations, tunnel invert depths, and possible subsurface conditions are summarized in Table 5 below.

Table 5. Subsurface Conditions in Borings within Tunnel Zones

Soil Boring	Tunnel Segment	Tunnel Invert Depth (ft)	Soil Types Encountered within Tunnel Zone	Ground Water Depth below Existing Ground Surface (ft)	
				Boring	In Piezometer
B-1	Fondren	11.7	8'-14': Stiff to hard CH	Dry (Drilling)	1.3 (8/27/15) n/a[(a)] (10/15/15)
B-2	Fondren	12.2	8'-14': Stiff to very stiff CH	Dry (Drilling)	-
B-5	HCFCD D140-05-01	17.5	13.5'-19.5': Stiff to hard CH	10 (Drilling) 7.0 (1/4 Hr.)	4.7 (8/27/15) 6.0 (10/15/15) 4.8 (11/23/15)
B-6	HCFCD D140-05-01	17.0	13'-14': Loose ML 14'-19': Very stiff to hard CH	12 (Drilling) 8.6 (1/4 Hr.)	-

Note: (a) Piezometer was destroyed by construction; water reading could not be obtained;
(b) CH = Fat Clay, ML = Silt.

Tunneling operations and placement of pipe inside tunnel constructed with primary liner should comply with Sections 02425 (LD) and 02517 of the latest edition of the COHSCS.

Loadings on Pipes: Recommendations for computation of loadings on pipes from HS-20 trucks are presented in Section 5.2.1 of this report.

5.3.1 Tunnel Access Shafts

Tunnel access shafts should be constructed in accordance with Section 02400 of the latest edition of the COHSCS. Based on Table 5, the tunnel access shafts for the Fondren Road tunnel crossing will encounter fat clay, and the HCFCD Unit D140-05-01 tunnel crossing will encounter saturated silt, fat clay, and groundwater. Since the access shafts (for the HCFCD Unit D140-05-01 tunnel) will most likely extend into water-bearing sand/silt, the access shaft walls can be supported by internally-braced, water-tight steel sheet piles.

AEC anticipates ground water control will be required for the tunnel shafts; in particular for the HCFCD Unit D140-05-01 tunnel. Possible ground water control measures includes: (i) single- or multiple-stage well points; (ii) educators and ejector-type systems; (iii) water-tight sheet pile cut-off walls; or (iv) jet-grouting of sandy soils in the immediate surrounding area. Generally, the groundwater depth should be lowered at least 5 feet below the excavation bottom (in accordance with Section 01578 of the latest edition of the COHSGR) to be able to work on a firm surface when water-bearing granular soils are encountered. If deep wells are used to dewater the excavation, extended and/or excessive dewatering can result in settlement of existing structures in the vicinity. One option to reduce the risk of settlement in these cases includes installing a series of reinjection wells around the perimeter of the construction area. General groundwater control recommendations are presented in Section 6.2 of this report. The options for dewatering presented here are for reference purposes only; it is the Contractor's responsibility to take the necessary precautions to minimize the effect on existing structures in the vicinity of the dewatering operation.

Sheet Piling: Design soil parameters for sheet pile design are presented on Plates C-1 and C-2, in Appendix C. AEC recommends that the sheet pile design consider both short-term and long-term parameters; whichever is critical should be used for design. The determination of the pressures exerted on the sheet piles by the retained soils shall consider active earth pressure, hydrostatic pressure, and uniform surcharge (including construction equipment, soil stockpiles, and traffic load, whichever surcharge is more critical).

Sheet pile design should be based on the following considerations:

(1) Ground water elevation at the top of the ground surface on the retained side;
(2) Ground water elevation 5 feet below the bottom of the access shaft excavation (assuming dewatering operations using deep wells);
(3) Neglect cohesion for active pressure determination, Equation (6) in Section 5.2.2 of this report;
(4) The design retained height should extend from the ground surface to the water line tunnel invert depth;
(5) A 300 psf uniform surcharge pressure from construction equipment or soil stockpiles should be considered at the top of the sheet piles; loose soil stockpiles during access shaft construction should be limited to 3 foot high or less;
(6) Use a Factor of Safety of 2.0 for passive earth pressure in front of (i.e. the shaft side) the sheet piles.

Design, construction, and monitoring of sheet piles should be performed by qualified personnel who are experienced in this operation. Sheet piles should be driven in pairs, and proper construction controls

provided to maintain alignment along the wall and prevent outward leaning of the sheet piles.

Bottom Stability: Recommendations for evaluating tunnel access shaft bottom stability are presented in Section 5.2.2 of this report.

Reaction Walls: Reaction walls (if used) will be part of the tunnel shaft walls; they will be rigid structures and support tunneling operations by mobilizing passive pressures of the soils behind the walls. The passive earth pressure can be calculated using Equation (8) in Section 5.2.3 of this report; we recommend that a factor of safety of 2.0 be used for passive earth pressure. The design soil parameters are presented on Plates C-1 and C-2 in Appendix C.

Due to subsurface variations, soils with different strengths and characteristics will likely be encountered at a given location. The soil resulting in the lowest passive pressure should be used for design of the walls. The soil conditions should be checked by geotechnical personnel to confirm the recommended soil parameters.

5.3.2 Tunnel Face Stability during Construction

5.3.2.1 General

The stability of a tunnel face is governed primarily by ground water and subsurface soil conditions, type of tunnel machine used, and workmanship. Based on the subsurface conditions encountered in our borings and the proposed invert depths (see Table 5 in Section 5.4 of this report), we anticipate that: (i) stiff to hard fat clay (CH) will generally be encountered at the tunneling zone along the alignment near Borings B-1 and B-2; and (ii) stiff to hard fat clay (CH) and water-bearing loose silt (ML) will generally be encountered at the tunneling zone along the alignment near Borings B-5 and B-6. Secondary features such as sand or silt partings/seams/pockets/layers were also encountered within the cohesive soils, and could be significant at some locations. In addition, the type and property of subsurface soils are subject to change between borings, and may be different at locations away from our borings.

When granular soils are encountered during construction the tunnel face can become unstable. Granular soils below ground water will tend to flow into the excavation hole; granular soils above the ground water level will generally not stand unsupported but will tend to ravel until a stable slope is formed at the face with a slope equal to the angle of repose of the material in a loose state. Thus, granular soils are generally

considered unstable in an unsupported excavation face; uncontrolled flowing soil can result in large loss of ground.

5.3.2.2 Anticipated Ground Behavior

Tunnel face stability is described in Section 5.4.2 of this report. The N_t values estimated for the cohesive soils encountered above the tunnel is presented in Table 6. AEC also estimated the maximum settlements caused by volume loss from tunneling in Table 6, assuming: (i) an Earth Pressure Balance (EPB) Tunnel Boring Machine (TBM) is used; (ii) the tunneling contractor practices good workmanship during the tunnel construction.

Table 6. Tunnel Face Stability Factor and Estimated Settlements along Tunnel Alignment

Soil Boring	Tunnel Segment	Tunnel Invert Depth (ft)	Anticipated Soil Types in Tunnel Zone	Stability Factor N_t	S_{max} (in)	Note/Suggestion
B-1	Fondren	11.7	Stiff to hard CH	1.4	0.02	Potential swelling ground due to very high plasticity CH .
B-2	Fondren	12.2	Stiff to very stiff CH	2.2	0.02	Potential swelling ground due to very high plasticity CH.
B-5	HCFCD D140-05-01	17.5	Stiff to hard CH	0.8	0.09	Flowing ground above tunnel zone under water; Potential swelling ground due to very high plasticity CH. Suggest using EPB TBM.
B-6	HCFCD D140-05-01	17.0	Loose ML Stiff to hard CH	0.6	0.11	Mixed ground conditions under water; potential swelling ground due to very high plasticity CH. Suggest using EPB TBM.

Note: (1) S_{max} = Estimated settlement along the tunnel alignment due to volume loss if slurry face machine (SFM) or EPB are not used; not including consolidation settlement;
(2) CH = Fat Clay, ML = Silt.

Based on Table 6, it should be noted that the estimated settlement at Boring B-5 and B-6's location is approximately 0.09 to 0.11 inches (which does not include consolidation settlement) or more, and

dewatering at Boring B-5 and B-6's locations will also cause additional settlement due to increases in effective stress of the soil strata. AEC notes that if an EPB TBM is not used, or if the tunneling contractor practices poor workmanship during construction, the amount of settlement could be significantly larger than the amounts estimated in Table 7.

The information in this report should be reviewed so that appropriate tunneling equipment and operation can be planned and factored into the construction plan and cost estimate. If the estimated settlement is too high, we suggest that the tunnel construction consider the use of: (i) jet grouting to stabilize the saturated granular soils (in addition to using an EPB TBM) in the vicinity of Boring B-6; or (ii) micro-tunneling. The choice of tunneling machine should be selected by the Contractor. Plate D-12 in Appendix D provides a general guideline for TBM selection. Tunnel construction should be in accordance with Section 02425 (LD) of the latest edition of the COHSCS.

5.3.2.3 Influence of Tunneling on Existing Structures

We estimated the resulting influence zones (extending from the centerline of the tunnel) to range from approximately 9 feet at Borings B-1 and B-2, and approximately 10 to 10.5 feet at Borings B-5 and B-6; although the values of tunnel influence zone presented are rough estimates. The estimated maximum settlements [caused by volume loss if a TBM is not used] along the tunnel alignment at the proposed tunnel locations are included in Table 6.

AEC emphasizes that the size of the influence zone of a tunnel is difficult to determine because several factors influence the response of the soil to tunneling operations including type of soil, ground water level and control method, type of tunneling equipment, tunneling operations, experience of operator, and other construction in the vicinity. Methods to prevent movement and/or distress to existing structures will require the services of a specialty contractor.

5.3.3 Measures to Reduce Distress from Tunneling

To control tunneling face loss and reduce potential impact on existing foundations and structures, AEC recommends the use of a steel casing (or equivalent methods) to support the tunnel excavation during tunnel construction. Considering the ground conditions discussed in Table 6, AEC recommends that the following tunneling operations be considered: (i) use a pressurized slurry TBM and keep the pressure at least equal to

if not greater than the combined soil and groundwater pressure in the ground at the tunnel level; and (ii) if excessive voids occur during tunneling, the contractor should immediately and completely grout the annular space between the steel casing and the ground at the tail of the machine, in accordance with Section 02431 of the latest edition of the COHSCS. It should be noted that grouting may increase friction resistance while advancing the casing and the contractor will need to address this condition as part of his tunnel work plan. Plate D-13, in Appendix D provides a general guideline for selection of grouting material. The tunneling machine selection, tunneling operation, and grouting (as necessary) will be the full responsibility of the Contractor.

To reduce the potential for the tunneling to influence existing foundations or structures, we recommend that the outer edge of the influence zone of the tunnel be a minimum of 5 feet from the outer edge of the bearing (stress) zone of existing foundations. The bearing (stress) zone is defined by a line drawn downward from the outer edge of an existing foundation and inclined at an angle of 45 degrees to the vertical.

We recommend that the following situations be evaluated on a case by case basis, where:

- tunneling cannot be located farther than the minimum distance recommended above;
- tunneling cannot be located outside the stress zone of the foundations for existing structures;
- unstable soils are encountered near existing structures;
- heavily loaded or critical structures are located close to the influence zone of the tunnels;

As an option, existing structure foundations should be protected by adequate shoring or strengthened by underpinning or other techniques, provided that tunneling cannot be located outside the stress zone of the existing foundations.

Disturbance and loss of ground from the tunneling operation may create surface soil disturbance and subsidence which in turn may cause distress to existing structures (including underground utilities and pavements) located in the zone of soil disturbance. Any open-cut excavation in the proposed tunneling areas should be adequately shored.

5.3.4 Monitoring Existing Structures

The Contractor should be responsible for monitoring existing structures nearby and taking necessary action to mitigate impact to adjacent structures. Existing structures located close to the proposed construction

excavations should be surveyed prior to construction and pre-existing conditions of such structures and their vicinity be adequately recorded. This can be accomplished by conducting a pre-construction survey, taking photographs and/or video, and documenting existing elevations, cracks, settlements, and other existing distress in the structures. The monitoring should include establishment of elevation monitor stations, crack gauges, and inclinometers, as required. The monitoring should be performed before, periodically during, and after construction. The data should be reviewed by qualified engineers in a timely manner to evaluate the impact on existing structures and develop plans to mitigate the impact, should it be necessary.

5.4 Pavement Restoration

Based on drawings provided by LAN, portions of the existing concrete roadway along West Airport Boulevard will be reconstructed whenever the waterline trench is adjacent to or within the pavement limits. Only the traffic lane adjacent to where the waterline trench excavations are located will be replaced. Based on the profile drawings, the new pavement will be placed at or near existing grade.

AEC recommends that the pavement thickness of the reconstructed lane match the thickness of the existing roadway or the minimum thickness required by Chapter 10 of the COH IDM, whichever is greater.

<u>COH Infrastructure Design Manual Requirements:</u> Chapter 10 of the latest edition of the COH IDM requires that concrete pavement have a 28 day compressive strength of 4,000 psi and a minimum reinforcing steel yield strength of 60,000 psi. The minimum design life span of the concrete pavement is 50 years. Minimum concrete and subgrade thickness is dependent on the classification of the roadway. A 'collector' requires a minimum concrete slab thickness of 9 inches and a minimum stabilized subgrade thickness of 6 inches for granular soil and a minimum thickness of 8 inches for cohesive soil. A 'thoroughfare' requires a minimum concrete slab thickness of 11 inches and a minimum stabilized subgrade thickness of 8 inches.

Based on Table 2 in Section 4.0 of this report, the concrete pavement thickness of West Airport Boulevard is 12.5 inches at Boring B-1, and the thickness varies from 6.5 to 8.5 inches at Borings B-2 through B-6. According to Chapter 10 of the latest edition of the COH IDM, the pavement thickness will have to be increased to the minimum pavement thickness of 9 inches.

Traffic Volume: Traffic counts along the project alignment were obtained from the COH Geographic Information Management System (GIMS) website. Table 7 presents available traffic count data from the GIMS website.

Table 7. Traffic Count Data from COH GIMS website

Street	From	To	Year	Average Daily Traffic (vpd)
W. Airport	Fondren	Sandpiper	2014	8,460
W. Airport	Sandpiper	Bob White	2014	7,999
W. Airport	Bob White	Kirkside	2014	6,870

AEC should be notified if different traffic count information should be used for design, so that our recommendations can be updated as necessary.

Estimate Anticipated Traffic Loads: Pavement design is based on the anticipated design number of 18-kip Equivalent Single Axle Loads (ESAL) the pavement is subjected to during its design life. The equation to calculate the number of 18-kip ESAL repetitions to use for pavement design is presented in Equation (9). Assumptions made by AEC to estimate 18-kip ESAL repetitions are presented on Table 8.

$$\text{18-kip ESAL} = (ADT)(T)(T_f)(D)(L)(G)(Y)(365) \qquad \text{.....Equation (9)}$$

where: ESAL = 18-kip Equivalent Single-Axle Load repetitions;
ADT = Average Daily Traffic, vehicles per day;
T = Percent of heavy trucks;
T_f = Truck factor;
D = Directional factor;
L = Lane factor;
G = Growth factor;
Y = Design life, in years.

Table 8. Parameters for Estimation of Traffic Loads for W. Airport Boulevard

Parameters	Between Fondren and Braewick
Average Daily Traffic (ADT)	8,545 vpd (2015)
Percent Heavy Trucks (T)	2% (assumed)
Truck factor (T_f)	1.5 (assumed)
Directional factor (D)	0.5 (2 lanes in each direction)
Lane factor (L)	1.0 (2 lanes in each direction)

Parameters	Between Fondren and Braewick
Total Growth Rate Factor (G)	1.45 (1.5% annual growth rate from 2015 to 2065, assumed)
Design life (Y)	50 years (required by COH IDM)
Estimated 18-kip ESAL Loading over Design Life	3,391,831

AEC notes that calculated number of 18-kip ESAL repetitions is highly sensitive to parameters such as percent heavy trucks, truck factor, and traffic volume growth rate in pavement design. Differences between assumed and actual traffic parameters can have significant effects on overall pavement thickness design and ultimate roadway performance. AEC should be notified if different traffic loads or design parameters are required for pavement design at the site so that our analysis can be updated accordingly.

5.4.1 Rigid Pavement

The pavement design recommendations developed below are in accordance with the "AASHTO Guide for Design of Pavement Structures," 1993 edition.

Rigid pavement design is based on the anticipated design number of 18-kip ESALs the pavement is subjected to during its design life. The parameters that were used in computing the rigid pavement section are as follows:

Overall Standard Deviation (S_0)	0.35
Initial Serviceability (P_0)	4.5
Terminal Serviceability (P_t)	2.5
Reliability Level (R)	95%
Overall Drainage Coefficient (C_d)	1.2 (curb and gutter)
Load Transfer Coefficient (J)	3.2
Loss of Support Category (LS)	1.2
Roadbed Soil Resilient Modulus (M_R)	3,000 psi
Elastic Modulus (E_{sb}) of Stabilized Soils	30,000 psi
Composite Effective Modulus of Subgrade Reaction (k)	74 pci
Concrete Compressive Strength (f'_c)	4,000 psi (at 28 days)
Mean Concrete Modulus of Rupture (S'_c)	600 psi (at 28 days)
Concrete Elastic Modulus (E_c)	3.6×10^6 psi

Table 9. Recommended Rigid Pavement Section for West Airport (at Waterline Trench only)

Pavement Layer	From Fondren to Braewick
Portland Cement Concrete	9*
Lime-stabilized Subgrade	8

Note: (*) Minimum pavement thickness required by Chapter 10 of COH IDM.

AEC used the DARWin v3.0 computer program to perform rigid pavement design. The DARWin outputs are presented on Plates E-1 and E-2, in Appendix E. Using the DARWin program, an 8.61 inch thick concrete pavement with 8 inch thick lime stabilized subgrade is required based on an estimated loading of 3,391,831 18-kip ESALs (see Table 7 in Section 5.4 of this report). In accordance with Chapter 10 of the latest edition of the COH IDM, the minimum requirement pavement for a 'collector' street is 9 inches of concrete and 8 inches of stabilized subgrade (for cohesive soils).

Given the above design parameters, the minimum 9 inch thick concrete pavement section should sustain 4,474,678 repetitions of 18-kip ESALs. The design engineer should verify whether the proposed pavement section will provide enough ESALs for the anticipated amount of site traffic. AEC should be notified if different standards or constants are required for pavement design at the site, so that our recommendations can be updated accordingly.

Concrete Pavement: Portland Cement Concrete (PCC) pavement should be constructed in accordance with Section 02751 of the latest edition of the COHSCS. AEC notes that there is a discrepancy between the requirements of the latest edition of the COHSCS and the latest edition of the COH IDM. Chapter 10 of the latest edition of the COH IDM requires a minimum 28-day concrete compressive strength of 4,000 psi to be used for concrete pavement design. However, according to Section 02751, concrete mix design has a required flexural strength of 600 psi at 28 days and field testing shall confirm a minimum concrete compressive strength of 3,500 psi at 28 days. In regards to this discrepancy, AEC recommends that the concrete mix design be performed to achieve a concrete compressive strength of 4,000 psi at 28 days, and also meets a minimum concrete flexural strength of 500 psi at 7 days and 600 psi at 28 days.

5.4.2 Reinforcing Steel

Reinforcing steel should be in accordance with Section 02751 of the latest edition of the COHSCS. Reinforcing steel is required to control pavement cracks, deflections across pavement joints and resist warping stresses in rigid pavements. The cross-sectional area of steel (A_s) required per foot of slab width can be calculated as follows (for both longitudinal and transverse steel).

$$A_s = FLW/(2f_s) \qquad \text{.....Equation (9)}$$

where:
- A_s = Required cross-sectional area of reinforcing steel per foot width of pavement, in^2
- F = Coefficient of resistance between slab and subgrade, F = 1.8 for stabilized soil
- L = Distance between free transverse joints or between free longitudinal edges, ft.
- W = Weight of pavement slab per foot of width, lbs/ft
- f_s = Allowable working stress in steel, 0.75 x (yield strength), psi
  i.e. f_s = 45,000 psi for Grade 60 steel.

5.4.3 Pavement Subgrade Preparation

Roadway grading and fill should be performed in general accordance with Section 02315 of the latest edition of the COHSCS. Existing pavement should be demolished in accordance with Section 02221 of the latest edition of the COHSCS. Where possible, subgrade preparation should extend a minimum of 2 feet beyond the paved area perimeters. After demolition of existing pavement, we recommend that a competent soil technician inspect the exposed subgrade to determine if there are any unsuitable soils or other deleterious materials. Excavate and dispose of unsuitable soils and other deleterious materials which will not consolidate; the excavation depth should be increased when inspection indicates the presence of organics and deleterious materials to greater depths. Unsuitable soil is defined in Section 02319 of the latest edition of the COHSCS. The exposed soils should be proof-rolled (see below) to identify and remove any weak, compressible, or other unsuitable materials; such over-excavations should be backfilled in general accordance with Section 02315 of the latest edition of the COHSCS. Proof rolling should be performed with a pneumatic tire roller (or using equivalent compaction equipment), with a loaded weight between 25 and 50 tons. At least two coverages should be made with the proof-roller, and offset each trip of the roller by at most 1 tire width. Rollers should make passes at a speed between 2 and 6 miles per hour.

Scarify areas to be filled to a depth of 4 inches to bond existing and new materials, and then mix with the first fill layer in accordance with Section 02315 of the latest edition of the COHSCS. Cut and pulverize

material to bottom of subgrade or 8 inches, whichever is greater, then stabilize the subgrade with at least 8 percent hydrated lime by dry soil weight. Lime stabilization shall be performed in accordance with Section 02336 of the latest edition of the COHSCS. The stabilized soils should be compacted to 95 percent of their ASTM D 698 (Standard Proctor) dry density at a moisture content ranging from optimum to 3 percent above optimum.

6.0 CONSTRUCTION CONSIDERATIONS

6.1 Site Preparation

To mitigate site problems that may develop following prolonged periods of rainfall, it is essential to have adequate drainage to maintain a relatively dry and firm surface prior to starting any work at the site. Adequate drainage should be maintained throughout the construction period. Methods for controlling surface runoff and ponding include proper site grading, berm construction around exposed areas, and installation of sump pits with pumps.

6.2 Groundwater Control

The need for groundwater control will depend on the depth of excavation relative to the groundwater depth at the time of construction. In the event that there is heavy rain prior to or during construction, the groundwater table may be higher than indicated in this report; higher seepage is also likely and may require a more extensive groundwater control program. In addition, groundwater may be pressurized in certain areas of the alignment, requiring further evaluation and consideration of the excess hydrostatic pressures. Groundwater control should be in general accordance with Section 01578 of the latest edition of the COHSGR.

The Contractor should be responsible for selecting, designing, constructing, maintaining, and monitoring a groundwater control system and adapt his operations to ensure the stability of the excavations. Groundwater information presented in Section 4.1 and elsewhere in this report, along with consideration for potential environmental and site variation between the time of our field exploration and construction, should be incorporated in evaluating groundwater depths. The following recommendations are intended to guide the Contractor during design and construction of the dewatering system.

In cohesive soils seepage rates are lower than in granular soils and groundwater is usually collected in sumps and channeled by gravity flow to storm sewers. If cohesive soils contain significant secondary features, seepage rates will be higher. This may require larger sumps and drainage channels, or if significant granular layers are interbedded within the cohesive soils, methods used for granular soils may be required. Where it is present, pressurized groundwater will also yield higher seepage rates.

Groundwater for excavations within saturated sands can be controlled by the installation of wellpoints. The practical maximum dewatering depth for well points is about 15 feet. When groundwater control is required below 15 feet, possible ground water control measures include: (i) deep wells with turbine or submersible pumps; (ii) multi-staged well points; or (iii) water-tight sheet pile cut-off walls. Generally, the groundwater depth should be lowered at least 5 feet below the excavation bottom (in accordance with Section 01578 of the latest edition of the COHSGR) to be able to work on a firm surface when water-bearing granular soils are encountered.

Extended and/or excessive dewatering can result in settlement of existing structures in the vicinity; the Contractor should take the necessary precautions to minimize the effect on existing structures in the vicinity of the dewatering operation. We recommend that the Contractor verify the groundwater depths and seepage rates prior to and during construction and retain the services of a dewatering expert (if necessary) to assist him in identifying, implementing, and monitoring the most suitable and cost-effective method of controlling groundwater.

For open cut construction in cohesive soils, the possibility of bottom heave must be considered due to the removal of the weight of excavated soil. In lean and fat clays, heave normally does not occur unless the ratio of Critical Height to Depth of Cut approaches one. In silty clays, heave does not typically occur unless an artificially large head of water is created through the use of impervious sheeting in bracing the cut. Guidelines for evaluating bottom stability are presented in Section 5.2.2 of this report.

6.3 Construction Monitoring

Pavement construction and subgrade preparation, as well as excavation, bedding, and backfilling of underground utilities should be monitored by qualified geotechnical professionals to check for compliance

with project documents and changed conditions, if encountered. AEC should be allowed to review the design and construction plans and specifications prior to release to check that the geotechnical recommendations and design criteria presented herein are properly interpreted.

6.4 Monitoring of Existing Structures

Existing structures in the vicinity of the proposed alignment should be closely monitored prior to, during, and for a period after excavation. Several factors (including soil type and stratification, construction methods, weather conditions, other construction in the vicinity, construction personnel experience and supervision) may impact ground movement in the vicinity of the alignment. We therefore recommend that the Contractor be required to survey and adequately document the condition of existing structures in the vicinity of the proposed alignment.

7.0 LIMITATIONS

The information contained in this report summarizes conditions found on the dates the borings were drilled. The attached boring logs are true representations of the soils encountered at the specific boring locations on the dates of drilling. Reasonable variations from the subsurface information presented in this report should be anticipated. If conditions encountered during construction are significantly different from those presented in this report; AEC should be notified immediately.

This investigation was performed using the standard level of care and diligence normally practiced by recognized geotechnical engineering firms in this area, presently performing similar services under similar circumstances. This report is intended to be used in its entirety. The report has been prepared exclusively for the project and location described in this report. If pertinent project details change or otherwise differ from those described herein, AEC should be notified immediately and retained to evaluate the effect of the changes on the recommendations presented in this report, and revise the recommendations if necessary. The recommendations presented in this report should not be used for other structures located along these alignments or similar structures located elsewhere, without additional evaluation and/or investigation.

AVILES ENGINEERING CORP.

APPENDIX A

Plate A-1	Vicinity Map
Plate A-2	Boring Location Plan
Plates A-3 to A-8	Boring Logs
Plate A-9	Key to Symbols
Plate A-10	Classification of Soils for Engineering Purposes
Plate A-11	Terms Used on Boring Logs
Plate A-12	ASTM & TXDOT Designation for Soil Laboratory Tests
Plates A-13 to A-15	Summary of Lab Data

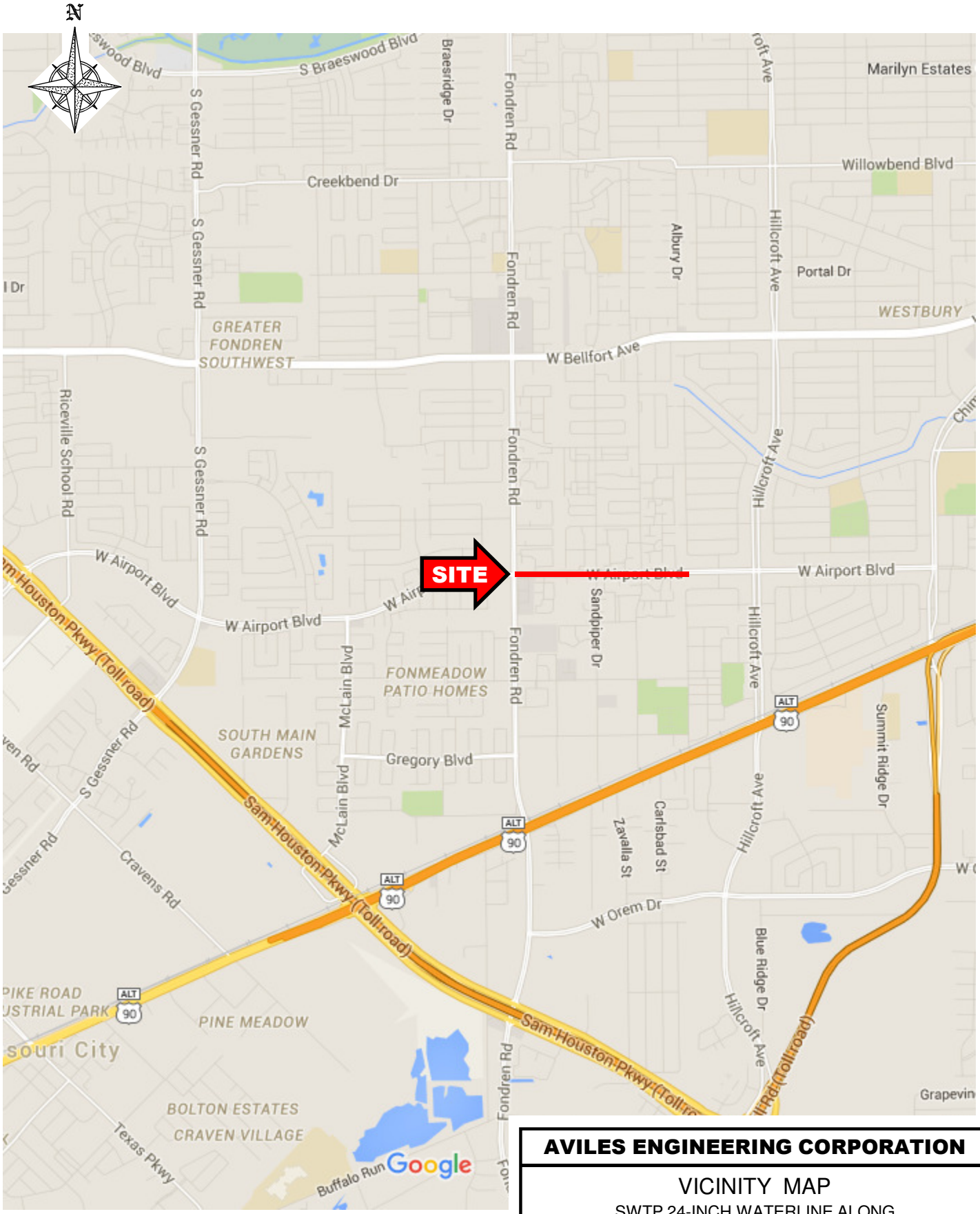

AVILES ENGINEERING CORPORATION

VICINITY MAP

SWTP 24-INCH WATERLINE ALONG
W. AIRPORT FROM FONDREN TO BRAEWICK
WBS NO. S-000900-0171-3, HOUSTON, TEXAS

AEC PROJECT NO.:	DATE:	SOURCE DRAWING PROVIDED BY:
G143-15	09-16-15	GOOGLE MAPS
APPROX. SCALE:	DRAFTED BY:	PLATE NO.:
N.T.S.	WIW	PLATE A-1

AVILES ENGINEERING CORPORATION

BORING LOCATION PLAN

SWTP 24-INCH WATERLINE ALONG
W. AIRPORT FROM FONDREN TO BRAEWICK
WBS NO. S-000900-0171-3, HOUSTON, TEXAS

AEC PROJECT NO.:	DATE:	SOURCE DRAWING PROVIDED BY:
G143-15	09-16-15	GOOGLE EARTH
APPROX. SCALE:	DRAFTED BY:	PLATE NO.:
1" = 300'	WIW	PLATE A-2

NOTE: BORING LOCATIONS ARE APPROXIMATE.

AVILES ENGINEERING CORP.
GEOTECHNICAL ENGINEERS

PROJECT: **24-In. Waterline along W. Airport Boulevard** BORING **B-1**

COH WBS No. **S-000900-0171-3** TYPE **4" Dry Auger** DATE **8/25/15**

ELEVATION IN FEET	DEPTH IN FEET	SYMBOL	SAMPLE INTERVAL	DESCRIPTION	S.P.T. BLOWS / FT.	-200 MESH	DRY DENSITY, PCF	MOISTURE CONTENT, %	LIQUID LIMIT	PLASTIC LIMIT	PLASTICITY INDEX
				Survey Coordinates (TSPC, Surface): *Easting: 3077693.9350* *Northing: 13800041.0010* *Elevation: 61.13*							
	0			Pavement: 12.5" concrete							
60				Base: 8" limestone gravel, sand, and clay (standing water encountered below pavement and within base layer)				40			
						93		36	92	29	63
				Firm to hard, gray Fat Clay (CH), with slickensides							
	5			-with ferrous nodules 2'-8', and calcareous nodules 2'-4'			85	38			
55				-tan and gray 4'-8'				39			
				-red, brown, and gray, with calcareous nodules 8'-10'		99		38	87	28	59
	10			-red and light gray 10'-12'							
50							98	30			
				-red 12'-14'							
								24			
				-light gray, red, and tan 14'-16'							
	15					93		31	85	24	61
45				-light gray 16'-22'							
							93	30			
								27			
	20										
40						92		27	75	21	54
				-light gray and tan 22'-30', with calcareous nodules 22'-24'			100	26			
				-with ferrous stains 24'-26'							
	25							18			
35											
								21			
	30			Termination depth = 30 feet.							
30											
	35										

SHEAR STRENGTH, TSF

△ Confined Compression
● Unconfined Compression
○ Pocket Penetrometer
□ Torvane

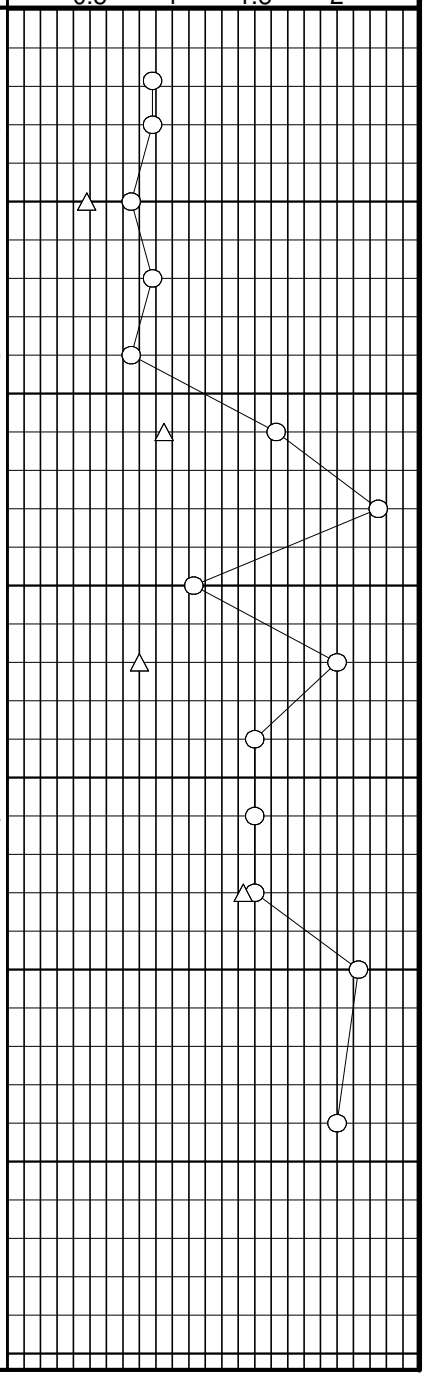

BORING DRILLED TO **30** FEET WITHOUT DRILLING FLUID
WATER ENCOUNTERED AT **N/A** FEET WHILE DRILLING
WATER LEVEL AT **1.3** FEET AFTER **24 HRS**
DRILLED BY **V&S** DRAFTED BY **CHL** LOGGED BY **BpJ**

AVILES ENGINEERING CORP.
GEOTECHNICAL ENGINEERS

PROJECT: **24-In. Waterline along W. Airport Boulevard** BORING **B-2**

COH WBS No. **S-000900-0171-3** TYPE **4" Dry Auger** DATE **8/25/15**

ELEVATION IN FEET	DEPTH IN FEET	SYMBOL	SAMPLE INTERVAL	DESCRIPTION *Survey Coordinates (TSPC, Surface):* *Easting: 3077900.9630* *Northing: 13800050.0940* *Elevation: 61.55*	S.P.T. BLOWS / FT.	-200 MESH	DRY DENSITY, PCF	MOISTURE CONTENT, %	LIQUID LIMIT	PLASTIC LIMIT	PLASTICITY INDEX
	0			Pavement: 8.5" concrete							
60				Base: 15.5" lime-stabilized crushed limestone and sand				11			
				Stiff to hard, dark gray Fat Clay (CH), with slickensides		97	79	40	99	28	71
				-with ferrous nodules 2'-8'							
	5			-with calcareous nodules 4'-6'				37			
55				-gray and tan 6'-8'		97		38	94	29	65
				-gray and brown 8'-10'			85	38			
	10			-red and light gray 10'-12'				40			
50				-red 12'-16', with silt pockets 12'-14'		100		27	71	23	48
	15						98	27			
45				-light gray and red 16'-18'				32			
				-light gray 18'-24'		89		22	61	16	45
	20						102	25			
40				-with calcareous nodules 22'-26'				28			
				-gray and tan, with ferrous nodules 24'-26'		92		25	78	23	55
	25										
35				-gray, red, and tan, with lean clay pockets 28'-30'			112	16			
	30			Termination depth = 30 feet.							
30											
	35										

SHEAR STRENGTH, TSF

△ Confined Compression
● Unconfined Compression
○ Pocket Penetrometer
□ Torvane

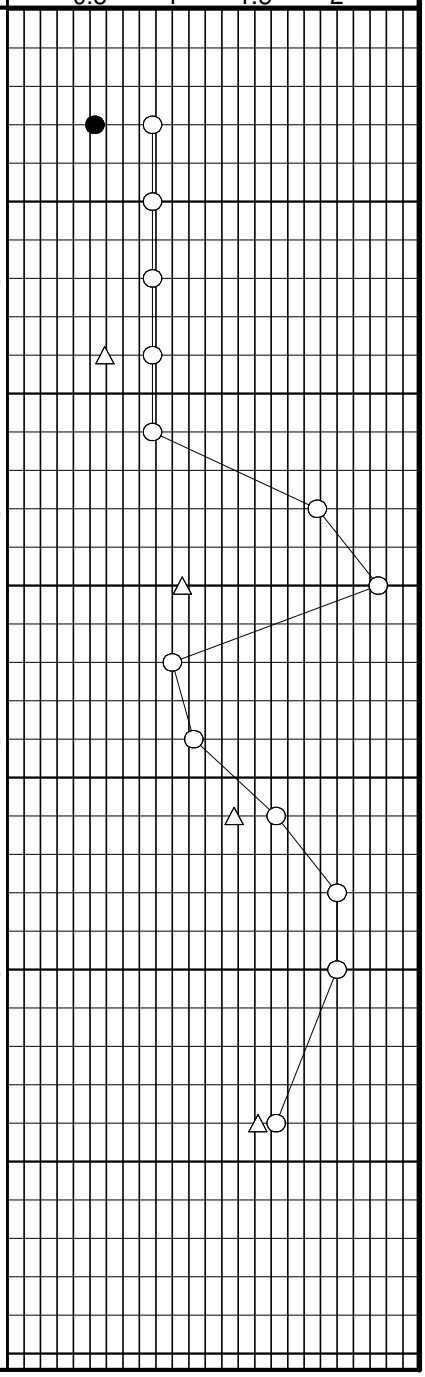

BORING DRILLED TO **30** FEET WITHOUT DRILLING FLUID
WATER ENCOUNTERED AT **N/A** FEET WHILE DRILLING
WATER LEVEL AT **N/A** FEET AFTER **COMPLETE**
DRILLED BY **V&S** DRAFTED BY **CHL** LOGGED BY **BpJ**

AVILES ENGINEERING CORP. GEOTECHNICAL ENGINEERS

PROJECT: **24-In. Waterline along W. Airport Boulevard** BORING **B-3**

COH WBS No. **S-000900-0171-3** TYPE **4" Dry Auger** DATE **8/26/15**

ELEVATION IN FEET	DEPTH IN FEET	SYMBOL	SAMPLE INTERVAL	DESCRIPTION *Survey Coordinates (TSPC, Surface):* *Easting: 3078900.3160* *Northing: 13800097.6480* *Elevation: 61.93*	S.P.T. BLOWS / FT.	-200 MESH	DRY DENSITY, PCF	MOISTURE CONTENT, %	LIQUID LIMIT	PLASTIC LIMIT	PLASTICITY INDEX
	0			Pavement: 7.5" concrete							
				Fill: firm to stiff, dark gray lime-stabilized Fat Clay (CH)			75	43			
60				Firm to hard, dark gray Fat Clay (CH), with slickensides				39			
				-with ferrous nodules 2'-4'							
	5			-olive gray 4'-6'		96		41	94	29	65
				-gray and tan 6'-8', with ferrous nodules 6'-10'			81	40			
55				-red and tan 8'-10'				31			
	10			-red and brown 10'-16'		100		24	64	24	40
50							98	27			
				-with calcareous nodules 14'-16'				26			
	15			-tan and gray 16'-25'		90		25	73	21	52
45				-with calcareous and ferrous nodules 18'-25'			103	24			
	20										
40											
								24			
	25			Termination depth = 25 feet.							
35											
	30										
30											
	35										

SHEAR STRENGTH, TSF

△ Confined Compression
● Unconfined Compression
○ Pocket Penetrometer
□ Torvane

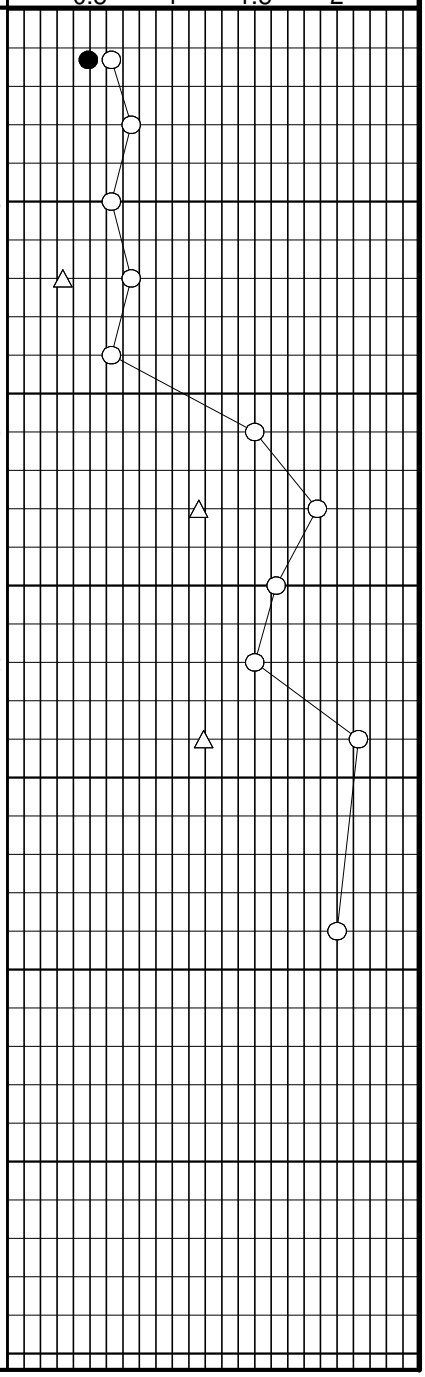

BORING DRILLED TO **25** FEET WITHOUT DRILLING FLUID

WATER ENCOUNTERED AT **N/A** FEET WHILE DRILLING

WATER LEVEL AT **N/A** FEET AFTER **COMPLETE**

DRILLED BY **V&S** DRAFTED BY **CHL** LOGGED BY **MRB**

AVILES ENGINEERING CORP. GEOTECHNICAL ENGINEERS

PROJECT: **24-In. Waterline along W. Airport Boulevard** BORING **B-4**

COH WBS No. **S-000900-0171-3** TYPE **4" Dry Auger** DATE **8/25/15**

ELEVATION IN FEET	DEPTH IN FEET	SYMBOL	SAMPLE INTERVAL	DESCRIPTION	S.P.T. BLOWS / FT.	-200 MESH	DRY DENSITY, PCF	MOISTURE CONTENT, %	LIQUID LIMIT	PLASTIC LIMIT	PLASTICITY INDEX
				Survey Coordinates (TSPC, Surface): *Easting: 3079871.1300* *Northing: 13800142.2630* *Elevation: 59.62*							
	0			Pavement: 6.5" concrete							
				Firm to hard, dark gray Fat Clay (CH), with slickensides		93		36	85	25	60
				-gray and tan 2'-10'			88	33			
55	5			-with calcaroeus nodules 4'-8'				38			
				-with ferrous stains 6'-8'		97		32	80	24	56
							98	25			
50	10			-red and gray 10'-12'				25			
				-red 12'-14'		100		28	78	26	52
45	15			-tan and gray 14'-25'			99	26			
				-with ferrous nodules 16'-25'				26			
						88		24	70	20	50
40	20										
				-with calcareous nodules 23'-25'			105	23			
35	25			Termination depth = 25 feet.							
30	30										
25	35										

SHEAR STRENGTH, TSF

△ Confined Compression
● Unconfined Compression
○ Pocket Penetrometer
□ Torvane

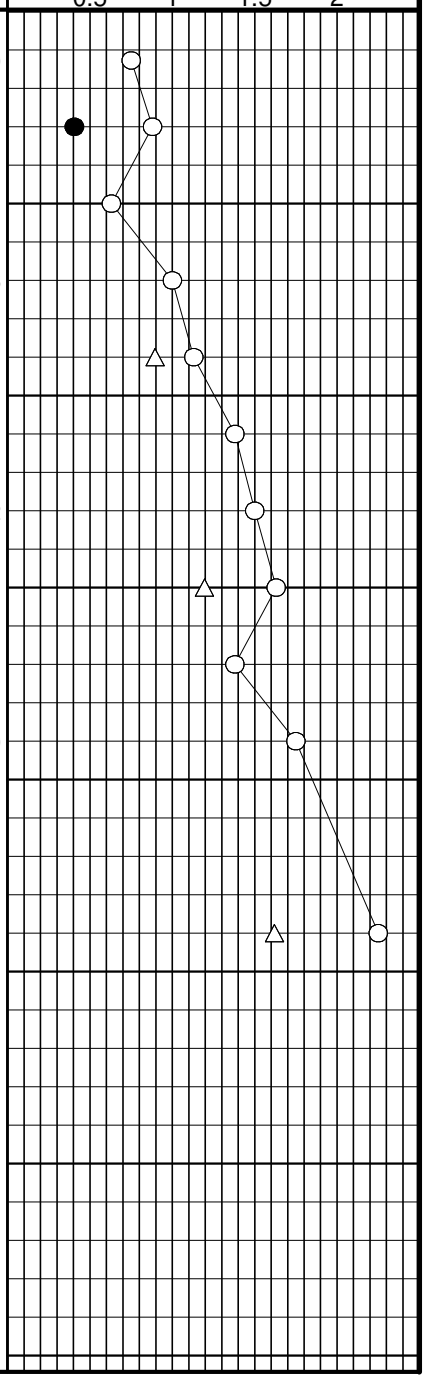

BORING DRILLED TO **25** FEET WITHOUT DRILLING FLUID

WATER ENCOUNTERED AT **N/A** FEET WHILE DRILLING

WATER LEVEL AT **N/A** FEET AFTER **COMPLETE**

DRILLED BY **V&S** DRAFTED BY **CHL** LOGGED BY **BpJ**

AVILES ENGINEERING CORP. GEOTECHNICAL ENGINEERS

PROJECT: **24-In. Waterline along W. Airport Boulevard** BORING **B-5**

COH WBS No. **S-000900-0171-3** TYPE **4" Dry Auger/Wet Rotary** DATE **8/24/15**

DESCRIPTION

Survey Coordinates (TSPC, Surface):

Easting: 3080893.2960

Northing: 13800176.3850

Elevation: 60.52

ELEVATION IN FEET	DEPTH IN FEET	DESCRIPTION	S.P.T. BLOWS / FT.	-200 MESH	DRY DENSITY, PCF	MOISTURE CONTENT, %	LIQUID LIMIT	PLASTIC LIMIT	PLASTICITY INDEX
60	0	Pavement: 8" concrete							
		Stiff to very stiff, dark gray Fat Clay (CH), with slickensides		91		30	85	22	63
		-with ferrous nodules 0'-2'			90	33			
		-with calcareous nodules 2'-10'							
		-tan and gray, with ferrous nodules 4'-10'							
55	5					33			
				94		26	77	24	53
		-with silty clay pockets 8'-10'			104	22			
50	10	Loose, red and tan Sandy Silt (ML), with clay and sand pockets, wet	8	61		24			
		Stiff to hard, red and tan Fat Clay (CH), with slickensides			103	24			
45	15			100		28	76	27	49
		-tan and light gray 16'-28'				26			
		-with calcareous nodules 18'-35'			101	25			
40	20	-with ferrous nodules 20'-35'		87		23	64	20	44
						18			
35	25				111	19			
				93		19	53	17	36
		-light gray and tan 28'-35'				22			
30	30								
		Termination depth = 35 feet.			98	26			
	35								

SHEAR STRENGTH, TSF

△ Confined Compression
● Unconfined Compression
○ Pocket Penetrometer
□ Torvane

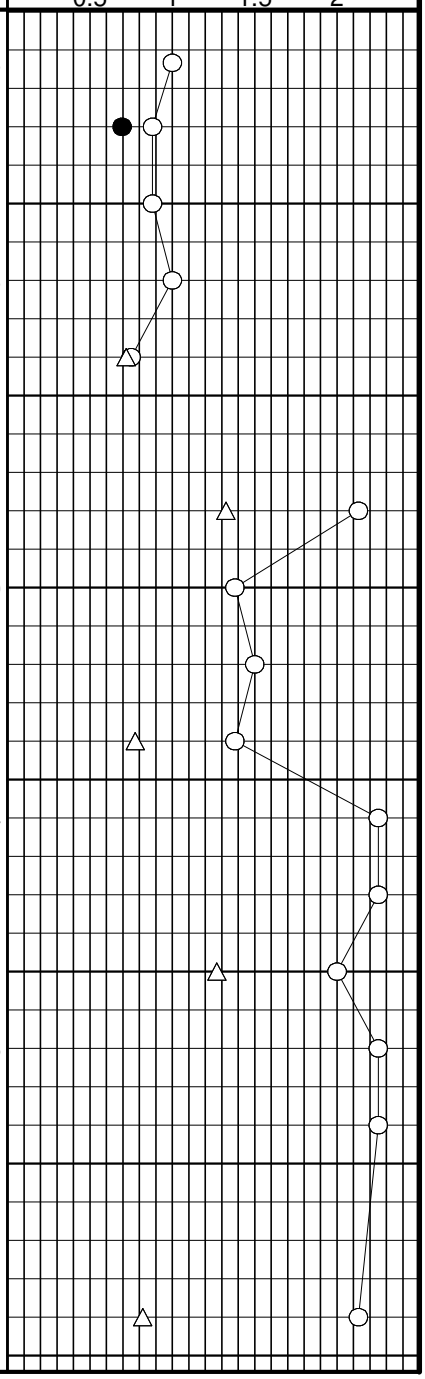

BORING DRILLED TO **12** FEET WITHOUT DRILLING FLUID

WATER ENCOUNTERED AT **10** FEET WHILE DRILLING

WATER LEVEL AT **4.7** FEET AFTER **24 HRS**

DRILLED BY **V&S** DRAFTED BY **CHL** LOGGED BY **BpJ**

AVILES ENGINEERING CORP.
GEOTECHNICAL ENGINEERS

PROJECT: **24-In. Waterline along W. Airport Boulevard** BORING **B-6**

COH WBS No. **S-000900-0171-3** TYPE **4" Dry Auger/Wet Rotary** DATE **8/24/15**

ELEVATION IN FEET	DEPTH IN FEET	DESCRIPTION	S.P.T. BLOWS / FT.	-200 MESH	DRY DENSITY, PCF	MOISTURE CONTENT, %	LIQUID LIMIT	PLASTIC LIMIT	PLASTICITY INDEX
		Survey Coordinates (TSPC, Surface): *Easting: 3081102.2180* *Northing: 13800184.9710* *Elevation: 60.08*							
60	0	Pavement: 7.5" concrete				51			
		Base: 2" lime-stabilized clay with gravel			90	33			
		Firm to very stiff, dark gray Fat Clay (CH), with slickensides		87		28	72	19	53
		-with ferrous nodules 0'-4'							
55	5	-gray and tan, with abundant calcaroeus nodules 4'-8'				30			
		-tan, with ferrous nodules 6'-8'			96	31			
		Very stiff, tan and gray Sandy Lean Clay (CL), with fat clay partings and abundant calcareous nodules		68		17	38	14	24
50	10	Loose, red and tan Silt (ML), with fat clay pockets, wet				26			
			9	93		21			
45	15	Stiff to hard, red Fat Clay (CH), with slickensides			101	26			
				100		33	81	27	54
						32			
40	20				92	32			
		Stiff to hard, light gray and tan Fat Clay w/ Sand (CH), with calcareous nodules		81		20	58	17	41
		-with ferrous stains 22'-24'							
35	25					20			
		-red, tan, and light gray 26'-28'			98	28			
		Very stiff to hard, light gray, red, and tan Fat Clay (CH), with abundant calcareous nodules		100		27	61	20	41
30	30								
		-light gray and tan, with ferrous nodules 33'-35'				26			
25	35	Termination depth = 35 feet.							

SHEAR STRENGTH, TSF

△ Confined Compression
● Unconfined Compression
○ Pocket Penetrometer
□ Torvane

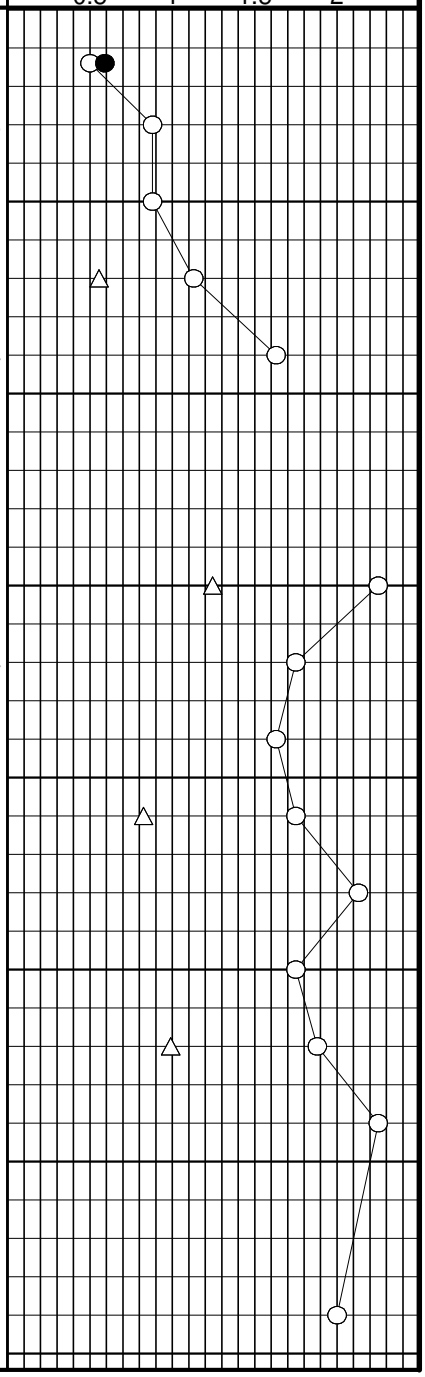

BORING DRILLED TO **14** FEET WITHOUT DRILLING FLUID
WATER ENCOUNTERED AT **12** FEET WHILE DRILLING ▽
WATER LEVEL AT **8.6** FEET AFTER **1/4 HR** ▼
DRILLED BY **V&S** DRAFTED BY **CHL** LOGGED BY **BpJ**

KEY TO SYMBOLS

Symbol	Description
Strata symbols	
	Paving
	Fill
	High plasticity clay
	Silt
	Low plasticity clay
Misc. Symbols	
	Subsequent water table depth
	Pocket Penetrometer
	Confined Compression
	Unconfined Compression
	Water table depth during drilling
Soil Samplers	
	Rock core
	Auger
	Undisturbed thin wall Shelby tube
	Standard penetration test

AYLES ENGINEERING CORP.

CLASSIFICATION OF SOILS FOR ENGINEERING PURPOSES

ASTM Designation D-2487

MAJOR DIVISIONS				GROUP SYMBOL	TYPICAL NAMES
COARSE-GRAINED SOILS (Less than 50% passes No. 200 sieve)	GRAVELS (Less than 50% of coarse fraction passes No. 4 sieve)	CLEAN GRAVELS (Less than 5% passes No. 200 sieve)		GW	Well-graded gravel, well-graded gravel with sand
				GP	Poorly-graded gravel, poorly-graded gravel with sand
		GRAVELS WITH FINES (More than 12% passes No. 200 sieve)	Limits plot below "A" line & hatched zone on plasticity chart	GM	Silty gravel, silty gravel with sand
			Limits plot above "A" line & hatched zone on plasticity chart	GC	Clayey gravel, clayey gravel with sand
	SANDS (50% or more of coarse fraction passes No. 4 sieve)	CLEAN SANDS (Less than 5% passes No. 200 sieve)		SW	Well-graded sand, well-graded sand with gravel
				SP	Poorly-graded sand, poorly-graded sand with gravel
		SANDS WITH FINES (More than 12% passes No. 200 sieve)	Limits plot below "A" line & hatched zone on plasticity chart	SM	Silty sand, silty sand with gravel
			Limits plot above "A" line & hatched zone on plasticity chart	SC	Clayey sand, clayey sand with gravel
FINE-GRAINED SOILS (50% or more passes No. 200 sieve)		SILTS AND CLAYS (Liquid Limit Less Than 50%)		ML	Silt, silt with sand, silt with gravel, sandy silt, gravelly silt
				CL	Lean clay, lean clay with sand, lean clay with gravel, sandy lean clay, gravelly lean clay
				OL	Organic clay, organic clay with sand, sandy organic clay, organic silt, sandy organic silt
		SILTS AND CLAYS (Liquid Limit 50% or More)		MH	Elastic silt, elastic silt with sand, sandy elastic silt, gravelly elastic silt
				CH	Fat clay, fat clay with sand, fat clay with gravel, sandy fat clay, gravelly fat clay
				OH	Organic clay, organic clay with sand, sandy organic clay, organic silt, sandy organic silt

NOTE: Coarse soils between 5% and 12% passing the No. 200 sieve and fine-grained soils with limits plotting in the hatched zone of the plasticity chart are to have dual symbols.

PLASTICITY CHART

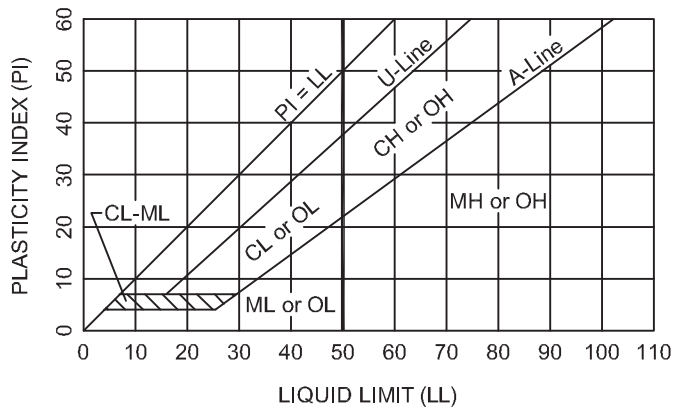

Equation of A-Line: Horizontal at PI=4 to LL=25.5, then PI=0.73(LL-20)

Equation of U-Line: Vertical at LL=16 to PI=7, then PI=0.9(LL-8)

DEGREE OF PLASTICITY OF COHESIVE SOILS

Degree of Plasticity	Plasticity Index
None	0 - 4
Slight	5 - 10
Medium	11 - 20
High	21 - 40
Very High	>40

SOIL SYMBOLS

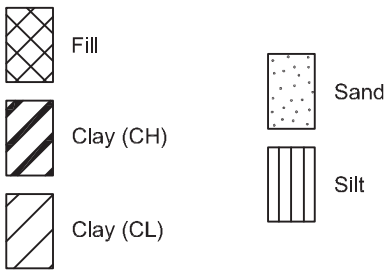

AYLES ENGINEERING CORP.

TERMS USED ON BORING LOGS

SOIL GRAIN SIZE

U.S. STANDARD SIEVE

6"	3"	3/4"	#4	#10	#40	#200		
BOULDERS	COBBLES	GRAVEL		SAND			SILT	CLAY
		COARSE	FINE	COARSE	MEDIUM	FINE		
152	76.2	19.1	4.76	2.00	0.420	0.074	0.002	

SOIL GRAIN SIZE IN MILLIMETERS

STRENGTH OF COHESIVE SOILS

Consistency	Undrained Shear Strength, Kips per Sq. ft.
Very Soft	less than 0.25
Soft	0.25 to 0.50
Firm	0.50 to 1.00
Stiff	1.00 to 2.00
Very Stiff	2.00 to 4.00
Hard	greater than 4.00

RELATIVE DENSITY OF COHESIONLESS SOILS FROM STANDARD PENETRATION TEST

Very Loose	<4 bpf
Loose	5-10 bpf
Medium Dense	11-30 bpf
Dense	31-50 bpf
Very Dense	>50 bpf

SPLIT-BARREL SAMPLER DRIVING RECORD

Blows per Foot	Description
25	25 blows driving sampler 12 inches, after initial 6 inches of seating.
50/7"	50 blows driving sampler 7 inches, after initial 6 inches of seating.
Ref/3"	50 blows driving sampler 3 inches, during initial 6-inches seating interval.

NOTE: To avoid change to sampling tools, driving is limited to 50 blows during or after seating interval.

DRY STRENGTH ASTM D2488

None	Dry specimen crumbles into powder with mere pressure of handling
Low	Dry specimen crumbles into powder with some finger pressure
Medium	Dry specimen breaks into pieces or crumbles with considerable pressure
High	Dry specimen cannot be broken with finger pressure, it can be broken between thumb and hard surface
Very High	Dry specimen cannot be broken between thumb and hard surface

MOISTURE CONDITION ASTM D2488

Dry	Absence of moisture, dusty, dry to the touch
Moist	Damp but no visible water
Wet	Visible free water

SOIL STRUCTURE

Slickensided	Having planes of weakness that appear slick and glossy. The degree of slickensidedness depends upon the spacing of slickensides and the easiness of breaking along these planes.
Fissured	Containing shrinkage or relief cracks, often filled with fine sand or silt; usually more or less vertical.
Pocket	Inclusion of material of different texture that is smaller than the diameter of the sample.
Parting	Inclusion less than 1/8 inch thick extending through the sample.
Seam	Inclusion 1/8 inch to 3 inches thick extending through the sample.
Layer	Inclusion greater than 3 inches thick extending through the sample.
Laminated	Soil sample composed of alternating partings or seams of different soil types.
Interlayered	Soil sample composed of alternating layers of different soil types.
Intermixed	Soil sample composed of pockets of different soil types and layered or laminated structure is not evident.
Calcareous	Having appreciable quantities of calcium material.

AVILES ENGINEERING CORP.

ASTM & TXDOT DESIGNATION FOR SOIL LABORATORY TESTS

NAME OF TEST	ASTM TEST DESIGNATION	TXDOT TEST DESIGNATION
Moisture Content	D 2216	Tex-103-E
Specific Gravity	D 854	Tex-108-E
Sieve Analysis	D 421 D 422	Tex-110-E (Part 1)
Hydrometer Analysis	D 422	Tex-110-E (Part 2)
Minus No. 200 Sieve	D 1140	Tex-111-E
Liquid Limit	D 4318	Tex-104-E
Plastic Limit	D 4318	Tex-105-E
Shrinkage Limit	D 427	Tex-107-E
Standard Proctor Compaction	D 698	Tex-114-E
Modified Proctor Compaction	D 1557	Tex-113-E
Permeability (constant head)	D 2434	-
Consolidation	D 2435	-
Direct Shear	D 3080	-
Unconfined Compression	D 2166	-
Unconsolidated-Undrained Triaxial	D 2850	Tex-118-E
Consolidated-Undrained Triaxial	D 4767	Tex-131-E
Pinhole Test	D 4647	-
California Bearing Ratio	D 1883	-
Unified Soil Classification System	D 2487	Tex-142-E

SUMMARY OF TEST RESULTS	Project Name: 24-INCH WATERLINE ALONG WEST AIRPORT BOULEVARD
	WBS Number: S-000900-0171-3
Aviles Engineering Corporation	AEC Project Number: G143-15

Boring No.	Sample				SPT (blows/ft)	Water Content (%)	Dry Density (pcf)	Atterberg Limits			Percent Passing Sieve #200 (%)	Shear Strength (tsf)				Type of Material
	No.	Depth (ft)		Type				LL (%)	PL (%)	PI (%)		Unconfined Compression	UU (confining pressure, psi)	Torvane	Pocket Penetrometer	
		Top	Bottom													
B-1	1	1.708	2	UD		40									0.88	Fat Clay (CH)
	2	2	4	UD		36		92	63	29	93				0.88	Fat Clay (CH)
	3	4	6	UD		38	85						0.48 (3)		0.75	Fat Clay (CH)
	4	6	8	UD		39									0.88	Fat Clay (CH)
	5	8	10	UD		38		87	59	28	99				0.75	Fat Clay (CH)
	6	10	12	UD		30	98						0.95 (7)		1.63	Fat Clay (CH)
	7	12	14	UD		24									2.25	Fat Clay (CH)
	8	14	16	UD		31		85	61	24	93				1.13	Fat Clay (CH)
	9	16	18	UD		30	93						0.80 (11)		2.00	Fat Clay (CH)
	10	18	20	UD		27									1.50	Fat Clay (CH)
	11	20	22	UD		27		75	54	21	92				1.50	Fat Clay (CH)
	12	22	24	UD		26	100						1.43 (15)		1.50	Fat Clay (CH)
	13	24	26	UD		18									2.13	Fat Clay (CH)
	14	28	30	UD		21									2.00	Fat Clay (CH)
B-2	1	0.708	2	AG		11										Base: 15.5" lime-stabilized crushed limestone and sand
	2	2	4	UD		40	79	99	71	28	97	0.53			0.88	Fat Clay (CH)
	3	4	6	UD		37									0.88	Fat Clay (CH)
	4	6	8	UD		38		94	65	29	97				0.88	Fat Clay (CH)
	5	8	10	UD		38	85						0.59 (6)		0.88	Fat Clay (CH)
	6	10	12	UD		40									0.88	Fat Clay (CH)
	7	12	14	UD		27		71	48	23	100				1.88	Fat Clay (CH)
	8	14	16	UD		27	98						1.06 (10)		2.25	Fat Clay (CH)
	9	16	18	UD		32									1.00	Fat Clay (CH)
	10	18	20	UD		22		61	45	16	89				1.13	Fat Clay (CH)
	11	20	22	UD		25	102						1.38 (14)		1.63	Fat Clay (CH)
	12	22	24	UD		28									2.00	Fat Clay (CH)
	13	24	26	UD		25		78	55	23	92				2.00	Fat Clay (CH)
	14	28	30	UD		16	112						1.52 (19)		1.63	Fat Clay (CH)
B-3	1	0.617	2	UD		43	75					0.49			0.63	Fill: Fat Clay (CH)
	2	2	4	UD		39									0.75	Fat Clay (CH)
	3	4	6	UD		41		94	65	29	96				0.63	Fat Clay (CH)
	4	6	8	UD		40	81						0.34 (5)		0.75	Fat Clay (CH)
	5	8	10	UD		31									0.63	Fat Clay (CH)
	6	10	12	UD		24		64	40	24	100				1.50	Fat Clay (CH)
	7	12	14	UD		27	98						1.16 (9)		1.88	Fat Clay (CH)
	8	14	16	UD		26									1.63	Fat Clay (CH)
	9	16	18	UD		25		73	52	21	90				1.50	Fat Clay (CH)

SUMMARY OF TEST RESULTS	Project Name: 24-INCH WATERLINE ALONG WEST AIRPORT BOULEVARD
	WBS Number: S-000900-0171-3
Aviles Engineering Corporation	AEC Project Number: G143-15

Boring No.	Sample				SPT (blows/ft)	Water Content (%)	Dry Density (pcf)	Atterberg Limits			Percent Passing Sieve #200 (%)	Shear Strength (tsf)				Type of Material
	No.	Depth (ft)		Type				LL (%)	PL (%)	PI (%)		Unconfined Compression	UU (confining pressure, psi)	Torvane	Pocket Penetrometer	
		Top	Bottom													
B-3 (Cont.)	10	18	20	UD		24	103						1.19 (13)		2.13	Fat Clay (CH)
	11	23	25	UD		24									2.00	Fat Clay (CH)
B-4	1	0.542	2	UD		36		85	60	25	93				0.75	Fat Clay (CH)
	2	2	4	UD		33	88					0.41			0.88	Fat Clay (CH)
	3	4	6	UD		38									0.63	Fat Clay (CH)
	4	6	8	UD		32		80	56	24	97				1.00	Fat Clay (CH)
	5	8	10	UD		25	98						0.90 (6)		1.13	Fat Clay (CH)
	6	10	12	UD		25									1.38	Fat Clay (CH)
	7	12	14	UD		28		78	52	26	100				1.50	Fat Clay (CH)
	8	14	16	UD		26	99						1.20 (10)		1.63	Fat Clay (CH)
	9	16	18	UD		26									1.38	Fat Clay (CH)
	10	18	20	UD		24		70	50	20	88				1.75	Fat Clay (CH)
	11	23	25	UD		23	105						1.62 (16)		2.25	Fat Clay (CH)
B-5	1	0.667	2	UD		30		85	63	22	91				1.00	Fat Clay (CH)
	2	2	4	UD		33	90					0.70			0.88	Fat Clay (CH)
	3	4	6	UD		33									0.88	Fat Clay (CH)
	4	6	8	UD		26		77	53	24	94				1.00	Fat Clay (CH)
	5	8	10	UD		22	104						0.72 (5)		0.75	Fat Clay (CH)
	6	10.5	12	SS	8	24					61					Sandy Silt (ML)
	7	12	14	UD		24	103						1.33 (7)		2.13	Fat Clay (CH)
	8	14	16	UD		28		76	49	27	100				1.38	Fat Clay (CH)
	9	16	18	UD		26									1.50	Fat Clay (CH)
	10	18	20	UD		25	101						0.78 (9)		1.38	Fat Clay (CH)
	11	20	22	UD		23		64	44	20	87				2.25	Fat Clay (CH)
	12	22	24	UD		18									2.25	Fat Clay (CH)
	13	24	26	UD		19	111						1.27 (11)		2.00	Fat Clay (CH)
	14	26	28	UD		19		53	36	17	93				2.25	Fat Clay (CH)
	15	28	30	UD		22									2.25	Fat Clay (CH)
	16	33	35	UD		26	98						0.82 (13)		2.13	Fat Clay (CH)
B-6	1	0.625	0.792	AG		51										Base: 2" lime-stabilized clay with gravel
	2	0.792	2	UD		33	90					0.59			0.50	Fat Clay (CH)
	3	2	4	UD		28		72	53	19	87				0.88	Fat Clay (CH)
	4	4	6	UD		30									0.88	Fat Clay (CH)
	5	6	8	UD		31	96						0.56 (5)		1.13	Fat Clay (CH)
	6	8	10	UD		17		38	24	14	68				1.63	Sandy Lean Clay (CL)
	7	10	12	UD		26										Silt (ML)

SUMMARY OF TEST RESULTS	Project Name: 24-INCH WATERLINE ALONG WEST AIRPORT BOULEVARD
	WBS Number: S-000900-0171-3
Aviles Engineering Corporation	AEC Project Number: G143-15

Boring No.	Sample				SPT (blows/ft)	Water Content (%)	Dry Density (pcf)	Atterberg Limits			Percent Passing Sieve #200 (%)	Shear Strength (tsf)				Type of Material
	No.	Depth (ft)		Type				LL (%)	PL (%)	PI (%)		Unconfined Compression	UU (confining pressure, psi)	Torvane	Pocket Penetrometer	
		Top	Bottom													
B-6 (cont.)	8	12.5	14	SS	9	21					93					Silt (ML)
	9	14	16	UD		26	101						1.25 (8)		2.25	Fat Clay (CH)
	10	16	18	UD		33		81	54	27	100				1.75	Fat Clay (CH)
	11	18	20	UD		32									1.63	Fat Clay (CH)
	12	20	22	UD		32	92						0.83 (10)		1.75	Fat Clay (CH)
	13	22	24	UD		20		58	41	17	81				2.13	Fat Clay w/Sand (CH)
	14	24	26	UD		20									1.75	Fat Clay w/Sand (CH)
	15	26	28	UD		28	98						0.99 (12)		1.88	Fat Clay w/Sand (CH)
	16	28	30	UD		27		61	41	20	100				2.25	Fat Clay (CH)
	17	33	35	UD		26									2.00	Fat Clay (CH)

Legend			Notes:
	R = Pavement Coring UD = UnDisturbed sample, extruded in field SS = Split Spoon sample AG = Auger Cuttings SPT = Standard Penetration Test	LL = Liquid Limit PL = Plastic Limit PI = Plasticity Index UU = Triaxial Compession	

AVILES ENGINEERING CORP.

APPENDIX B

Plate B-1	Generalized Soil Profiles
Plates B-2 to B-3	Piezometer Installation Details

GENERALIZED SUBSURFACE SOIL PROFILE

STATIONS ALONG BASELINE

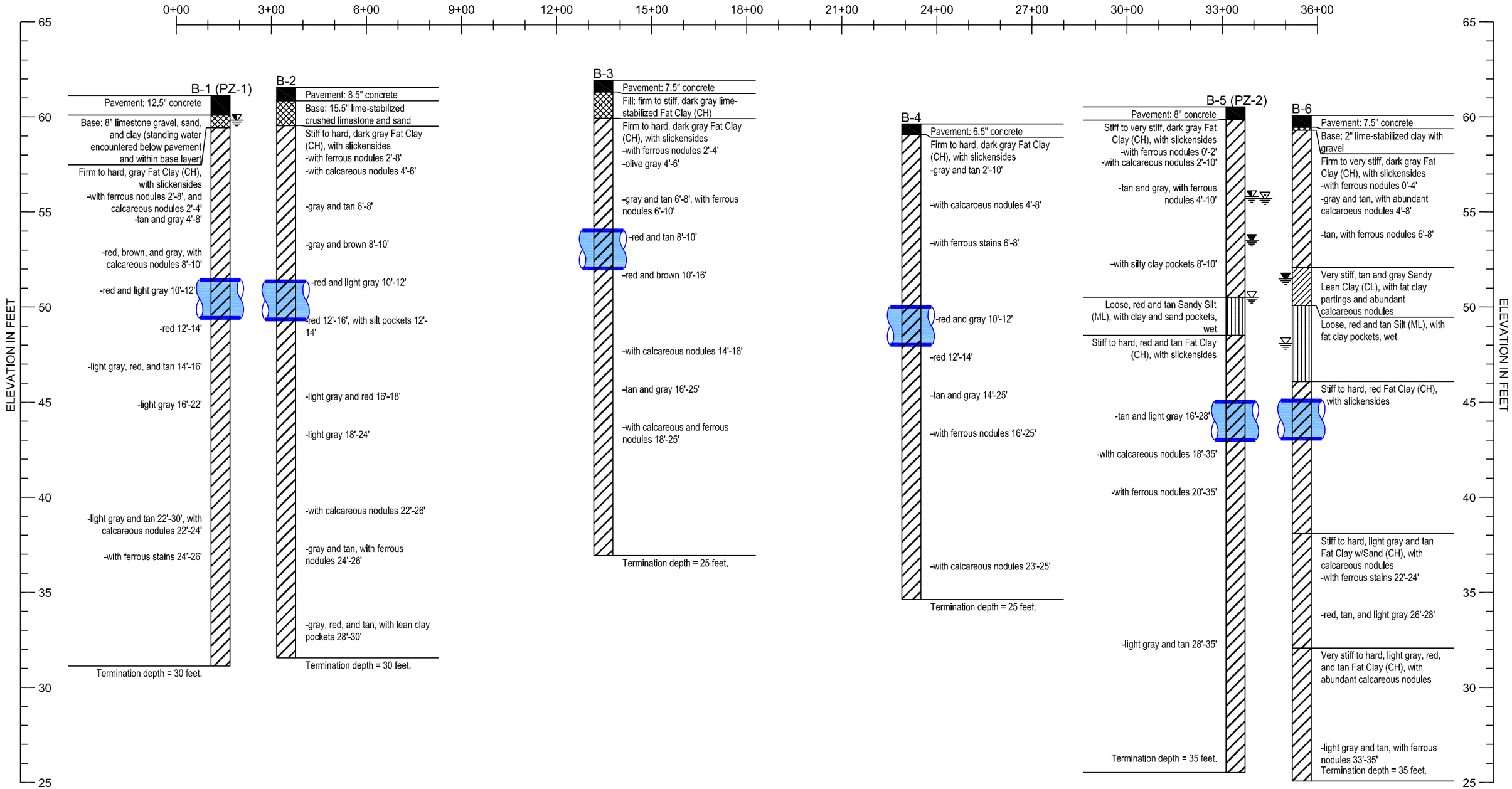

LEGEND:

- Paving
- High plasticity clay
- Silt
- Fill
- Low plasticity clay
- Depth of water first encountered during drilling
- Depth of water ~15 min. after initial encounter
- Depth of water in piezometer 8/27/15
- Depth of water in piezometer 10/15/15
- Depth of water in piezometer 11/23/15
- Approx proposed 24–in water line at each boring

Notes:

(1) Soil stratigraphy and secondary soil structure (such as seams, layers, or pockets of sands or silts, slickensides, and fissures) that are different from what were identified in the actual borings may exist away from these borings.

AVILES ENGINEERING CORPORATION

GENERALIZED SOIL PROFILE

SWTP 24 INCH WATERLINE ALONG WEST AIRPORT BOULEVARD FROM FONDREN ROAD TO BRAEWICK DRIVE, WBS NO. S-000900-0171-3 HOUSTON, TEXAS

AEC PROJECT NO.: G143-15	DATE: 11-23-15	SOURCE DRAWING PROVIDED BY: AVILES ENGINEERING CORP.
VERTICAL SCALE: 1" = 5' HORIZONTAL SCALE: 1" = 300'	DRAFTED BY: BpJ	PLATE NO.: PLATE B-1

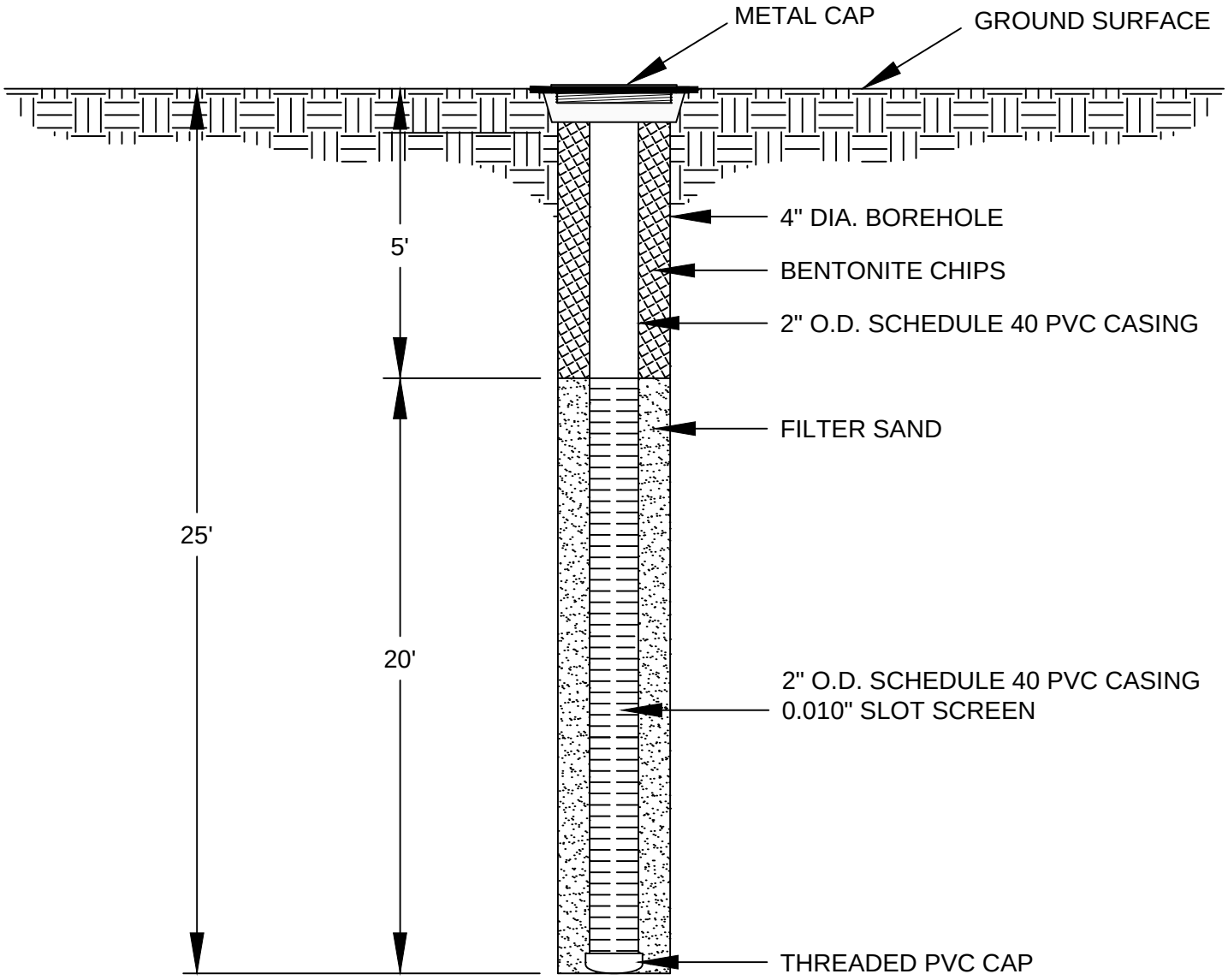

GROUNDWATER DEPTH FROM SURFACE:	DATE MEASURED:
1.3 FT	8/27/2015
PIEZOMETER DESTROYED BY STREET RECONSTRUCTION	10/15/2015

AVILES ENGINEERING CORPORATION

PIEZOMETER INSTALLATION DETAILS
BORING B-1 (PZ-1)

SWTP 24 INCH WATERLINE ALONG WEST AIRPORT BOULEVARD FROM FONDREN RD TO BRAEWICK DR, WBS NO. S-000900-0171-3
HOUSTON, TEXAS

AEC PROJECT NO. :	DATE:	SOURCE DWG. BY:
G143-15	11-23-15	AVILES ENGINEERING CORP.
SCALE: N.T.S.	DRAWN BY: BpJ	PLATE NO. : PLATE B-2

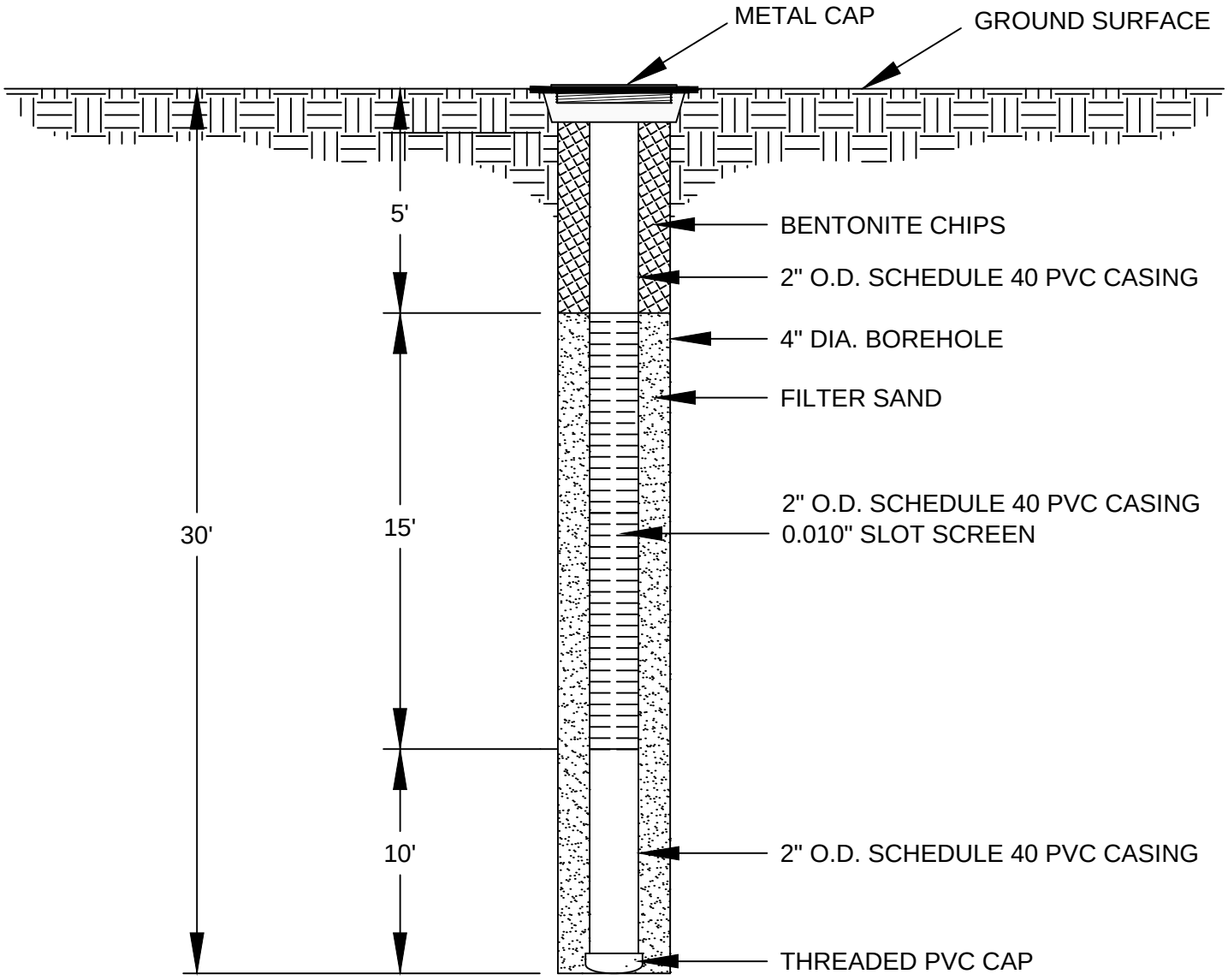

GROUNDWATER DEPTH FROM SURFACE:	DATE MEASURED:
4.7 FT	8/27/2015
6.0 FT	10/15/2015
4.8 FT	11/23/2015

AVILES ENGINEERING CORPORATION

PIEZOMETER INSTALLATION DETAILS
BORING B-5 (PZ-2)

SWTP 24 INCH WATERLINE ALONG WEST AIRPORT BOULEVARD
FROM FONDREN RD TO BRAEWICK DR, WBS NO. S-000900-0171-3
HOUSTON, TEXAS

AEC PROJECT NO. :	DATE:	SOURCE DWG. BY:
G143-15	11-23-15	AVILES ENGINEERING CORP.
SCALE: N.T.S.	DRAWN BY: BpJ	PLATE NO. : PLATE B-3

AVILES ENGINEERING CORP.

APPENDIX C

Plates C-1 to C-2	Recommended Geotechnical Design Parameters
Plate C-3	Load Coefficients for Pipe Loading
Plate C-4	Live Loads on Pipe Crossing Under Roadway

G143-15 24 INCH WATERLINE ALONG WEST AIRPORT BLVD BETWEEN FONDREN RD AND BRAEWICK DR
SOIL PARAMETERS FOR UNDERGROUND UTILITIES

Boring	Depth (ft)	Soil Type	γ (pcf)	γ' (pcf)	OSHA Type	E'n (psi)	Short-Term					Long-Term				
							C (psf)	φ (deg)	K_a	K_0	K_p	C' (psf)	φ' (deg)	K_a	K_0	K_p
B-1	0-10	Firm to stiff CH	117	55	C	300	900	0	1.00	1.00	1.00	75	16	0.57	0.72	1.76
	10-14	Stiff to hard CH	127	65	B	600	1900	0	1.00	1.00	1.00	175	16	0.57	0.72	1.76
	14-18	Stiff to very stiff CH	121	59	B	600	1600	0	1.00	1.00	1.00	150	16	0.57	0.72	1.76
	18-30	Very stiff to hard CH	126	64	B (18-20)	1000	2900	0	1.00	1.00	1.00	275	16	0.57	0.72	1.76
B-2	0-8	Stiff CH	111	49	B	300	1000	0	1.00	1.00	1.00	100	16	0.57	0.72	1.76
	8-12	Stiff CH	117	55	B	600	1200	0	1.00	1.00	1.00	100	16	0.57	0.72	1.76
	12-20	Stiff to hard CH	125	63	B	1000	2100	0	1.00	1.00	1.00	200	16	0.57	0.72	1.76
	20-25	Very stiff CH	128	66	n/a	1000	2700	0	1.00	1.00	1.00	250	16	0.57	0.72	1.76
	25-30	Very stiff CH	130	68	n/a	1000	3000	0	1.00	1.00	1.00	300	16	0.57	0.72	1.76
B-3	0-4	Firm to stiff CH	107	45	C	300	800	0	1.00	1.00	1.00	75	16	0.57	0.72	1.76
	4'-10	Firm to stiff CH	113	51	C	300	600	0	1.00	1.00	1.00	50	16	0.57	0.72	1.76
	10-16	Very stiff CH	125	63	B	1000	2300	0	1.00	1.00	1.00	225	16	0.57	0.72	1.76
	16-25	Very stiff to hard CH	128	66	B (16-20)	1000	2400	0	1.00	1.00	1.00	225	16	0.57	0.72	1.76
B-4	0-8	Firm to stiff CH	117	55	C	300	800	0	1.00	1.00	1.00	75	16	0.57	0.72	1.76
	8-12	Stiff to very stiff CH	123	61	B	600	1800	0	1.00	1.00	1.00	175	16	0.57	0.72	1.76
	12-18	Very stiff CH	125	63	B	1000	2400	0	1.00	1.00	1.00	225	16	0.57	0.72	1.76
	18-25	Very stiff to hard CH	129	67	B (18-20)	1000	3200	0	1.00	1.00	1.00	300	16	0.57	0.72	1.76
B-5	0-5	Stiff CH	120	58	B	600	1400	0	1.00	1.00	1.00	125	16	0.57	0.72	1.76
	5-10	Stiff CH	127	65	C*	600	1400	0	1.00	1.00	1.00	125	16	0.57	0.72	1.76
	10-12	Loose ML	115	53	C	300	0	28	0.36	0.53	2.77	0	28	0.36	0.53	2.77
	12-14	Very stiff to hard CH	128	66	C*	1000	2600	0	1.00	1.00	1.00	250	16	0.57	0.72	1.76
	14-20	Stiff to very stiff CH	126	64	C*	600	1500	0	1.00	1.00	1.00	150	16	0.57	0.72	1.76
	20-30	Very stiff to hard CH	132	70	n/a	1000	2400	0	1.00	1.00	1.00	225	16	0.57	0.72	1.76
	30-35	Stiff to hard CH	124	62	n/a	600	1600	0	1.00	1.00	1.00	150	16	0.57	0.72	1.76
B-6	0-6	Firm to stiff CH	120	58	C	300	1000	0	1.00	1.00	1.00	100	16	0.57	0.72	1.76
	6-8	Firm to very stiff CH	126	64	B	600	1100	0	1.00	1.00	1.00	100	16	0.57	0.72	1.76
	8-10	Very stiff CL	125	63	C*	600	2000	0	1.00	1.00	1.00	200	18	0.53	0.69	1.89

G143-15 24 INCH WATERLINE ALONG WEST AIRPORT BLVD BETWEEN FONDREN RD AND BRAEWICK DR
SOIL PARAMETERS FOR UNDERGROUND UTILITIES

Boring	Depth (ft)	Soil Type	γ (pcf)	γ' (pcf)	OSHA Type	E'n (psi)	Short-Term					Long-Term				
							C (psf)	φ (deg)	K_a	K_0	K_p	C' (psf)	φ' (deg)	K_a	K_0	K_p
B-6 (cont.)	10-14	Loose ML	115	53	C	600	0	28	0.36	0.53	2.77	0	28	0.36	0.53	2.77
	14-16	Very stiff to hard CH	127	65	C*	1000	2500	0	1.00	1.00	1.00	250	16	0.57	0.72	1.76
	16-22	Stiff to very stiff CH	120	58	C* (16-20)	600	1600	0	1.00	1.00	1.00	150	16	0.57	0.72	1.76
	22-35	Very stiff to hard CH	125	63	n/a	600	2000	0	1.00	1.00	1.00	200	16	0.57	0.72	1.76

(1) γ = Unit weight for soil above water level, γ′ = Buoyant unit weight for soil below water level. E'n = Soil modulus for native soils;

(2) C = Soil ultimate cohesion for short term (upper limit of 3,600 psf for design purposes), φ = Soil friction angle for short term;

(3) C' = Soil ultimate cohesion for long term (upper limit of 300 psf for design purposes), φ' = Soil friction angle for long term;

(4) K_a = Coefficient of active earth pressure, K_0 = Coefficient of at-rest earth pressure, K_p = Coefficient of passive earth pressure;

(5) CL = Lean Clay, CH = Fat Clay, SC= Clayey Sand, SM = Silty Sand, SP-SM = Poorly Graded Sand w/Silt;

(6) OSHA Soil Types for soils in the top 20 feet below grade:

A: cohesive soils with qu = 1.5 tsf or greater (qu = Unconfined Compressive Strength of the Soil)

B: cohesive soils with qu = 0.5 tsf or greater

C: cohesive soils with qu = less than 0.5 tsf, fill materials, or granular soil

C*: submerged cohesive soils; dewatered cohesive soils can be considered OSHA Type C.

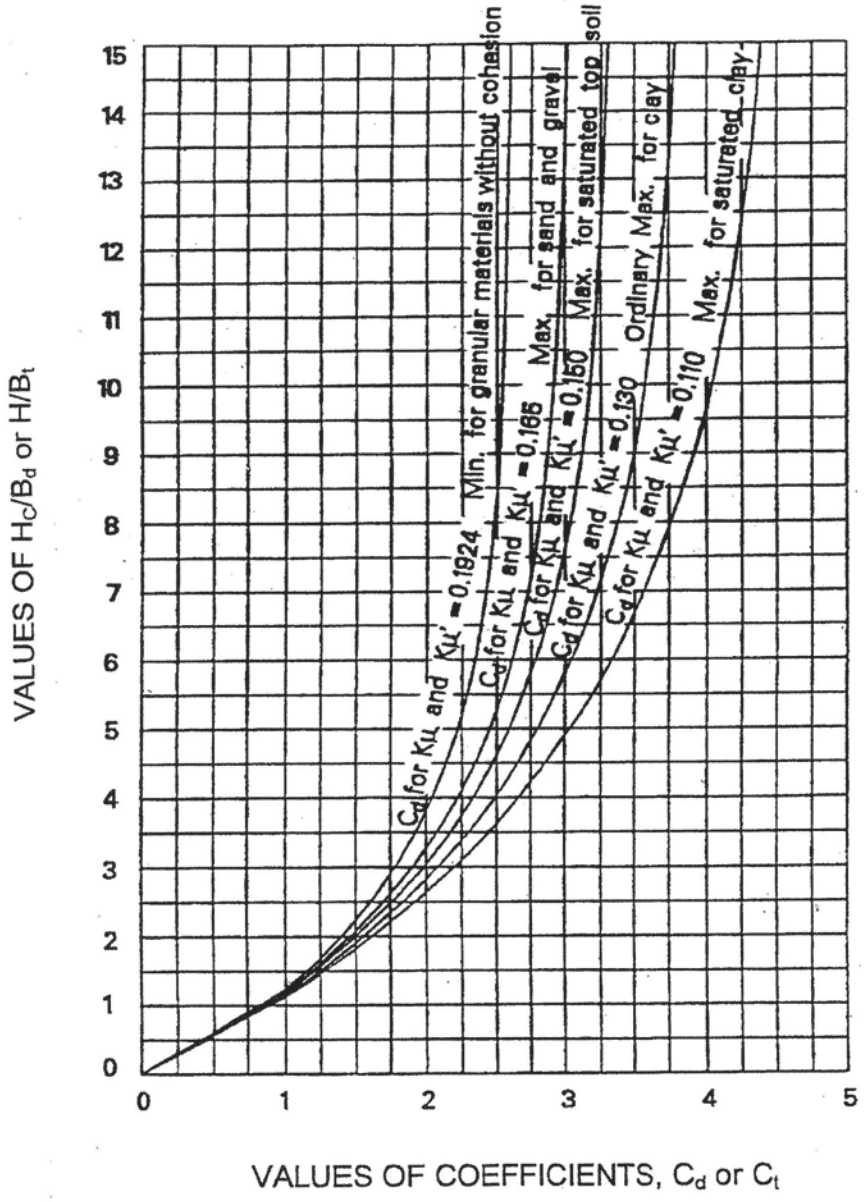

Reference: US Army Corps of Engineers Engineering Manual, EM 1110-2-2902, Oct. 31, 1997, Figure 2-5.

AVILES ENGINEERING CORP.

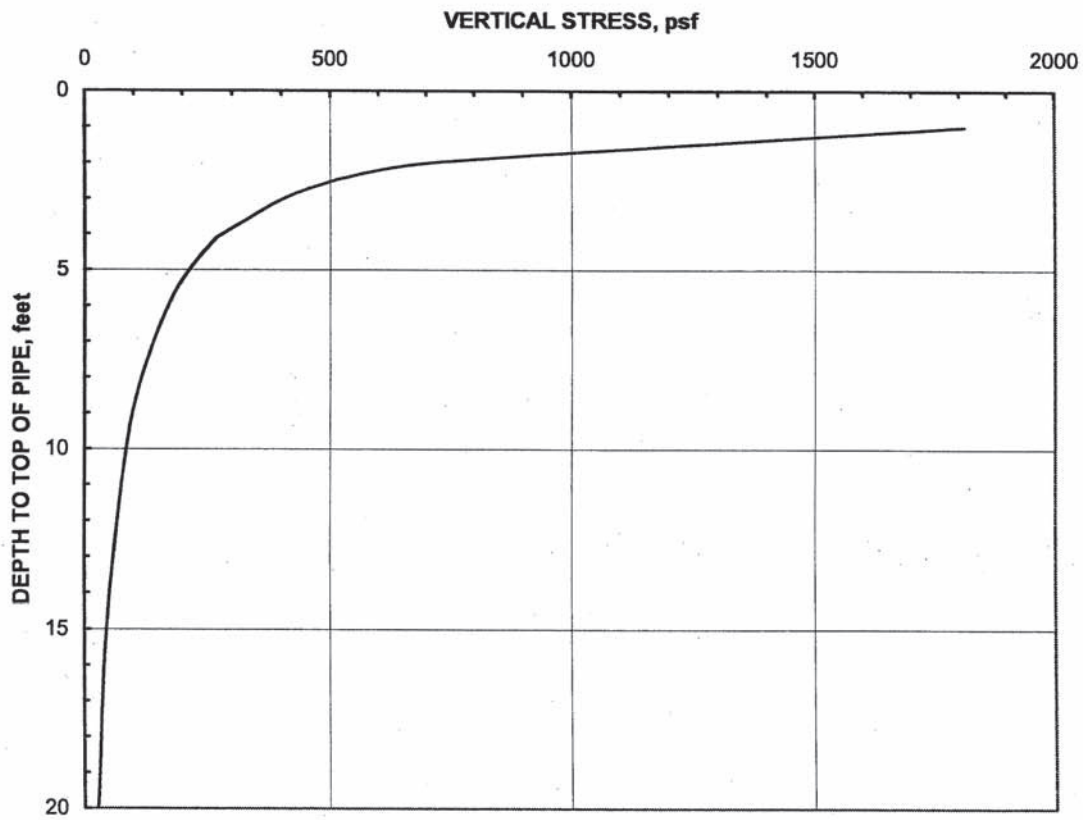

LIVE LOADS ON PIPE CROSSING UNDER ROADWAY

Note: 1. The vertical stress was estimated using AASHTO HS20 truck axle loadings on paved surfaces (Reference: ASCE 15-98, "Standard Practice for Direct Design of Buried Precast Concrete Pipe Using Standandard Installations").
2. Single truck passing.

AVILES ENGINEERING CORP.

APPENDIX D

Plate D-1	Critical Heights of Cut Slopes in Nonfissured Clays
Plate D-2	Maximum Allowable Slopes
Plate D-3	A Combination of Bracing and Open Cuts
Plate D-4	Lateral Pressure Diagrams for Open Cuts in Cohesive Soil-Long Term Conditions
Plate D-5	Lateral Pressure Diagrams for Open Cuts in Cohesive Soil-Short Term Conditions
Plate D-6	Lateral Pressure Diagrams for Open Cuts in Sand
Plate D-7	Bottom Stability for Braced Excavation in Clay
Plate D-8	Thrust Force Calculation
Plate D-9	Thrust Force Example Calculation
Plate D-10	Design Parameters for Bearing Thrust Block
Plate D-11	Relation between the Width of Surface Depression and Depth of Cavity for Tunnels
Plate D-12	Tunnel Behavior and TBM Selection
Plate D-13	Methods of Controlling Ground Water in Tunnel and Grouting Material Selection

AYLES ENGINEERING CORP.

Critical Heights of Cut Slopes in Nonfissured Clays

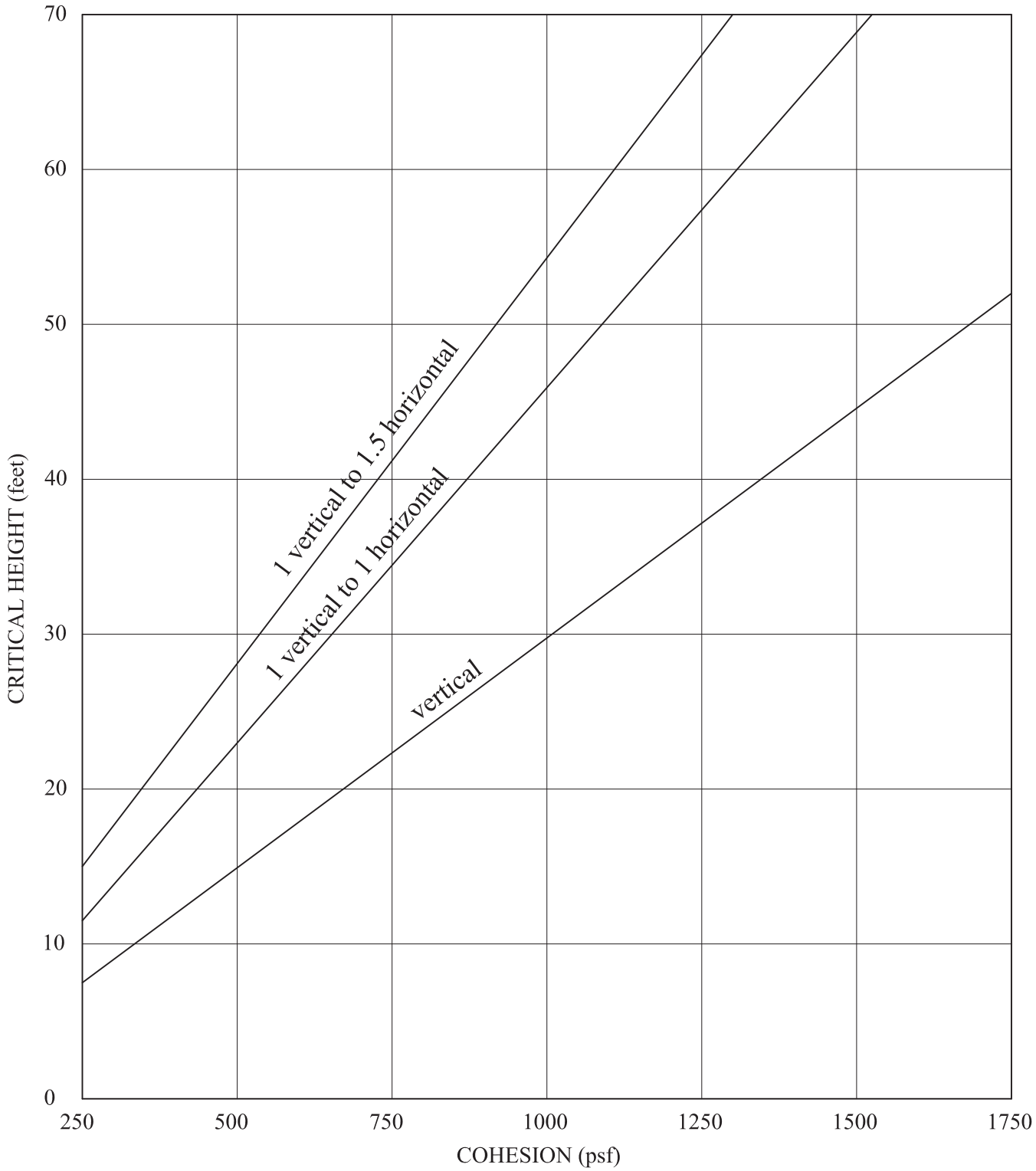

Note: The charts are calculated based on NAVFAC DM7.1, Page 7.1-319, assuming the critical circles are toe circles, and wet unit weight of soils = 125pcf.

AYLES ENGINEERING CORP.

MAXIMUM ALLOWABLE SLOPES

	SHORT TERM	LONG TERM
TYPE A SOILS	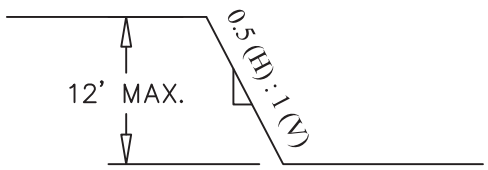	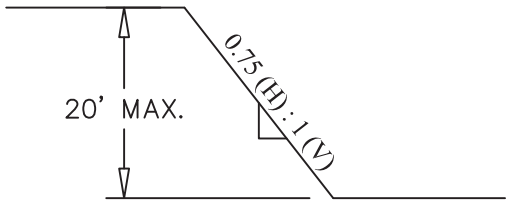
TYPE B SOILS	N/A	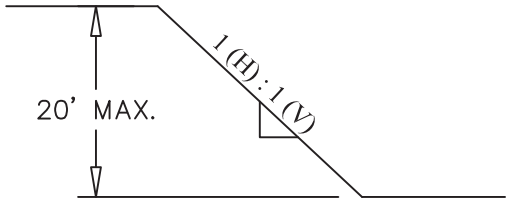
TYPE C SOILS	N/A	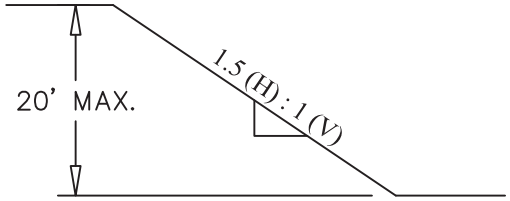

NOTES:

(1) For Type A soils, a short term maximum allowable slope of 0.5 (H) : 1 (V) is allowed in excavations that are 12 feet or less in depth; short term (24 hours or less) maximum allowable slopes for excavations greater than 12 feet in depth shall be 0.75 (H) : 1 (V).

(2) Maximum depth for above slopes is 20 feet. For slopes deeper than 20 feet, trench protection should be designed by the Contractor's professional engineer.

Reference: OSHA, Safety and Health Regulations for Construction, 1926 Subpart P.

A COMBINATION OF BRACING AND OPEN CUTS

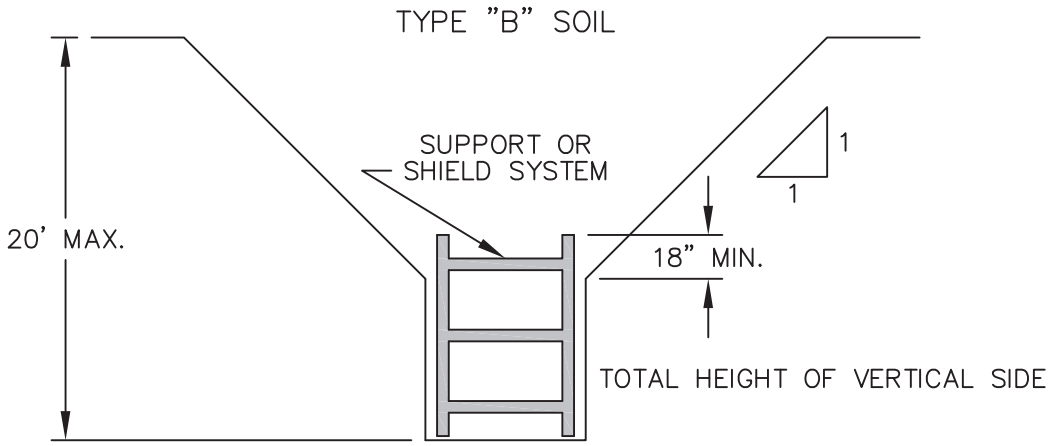

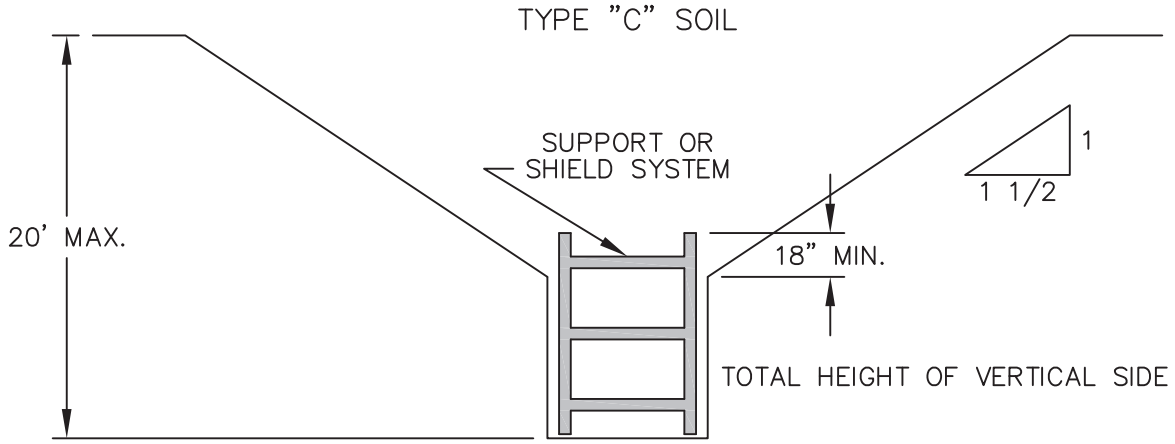

Reference: OSHA, Safety and Health Regulations for Construction, 1926 Subpart P.

AVILES ENGINEERING CORP.

LATERAL PRESSURE DIAGRAMS
FOR OPEN CUTS IN COHESIVE SOIL - LONG TERM CONDITIONS

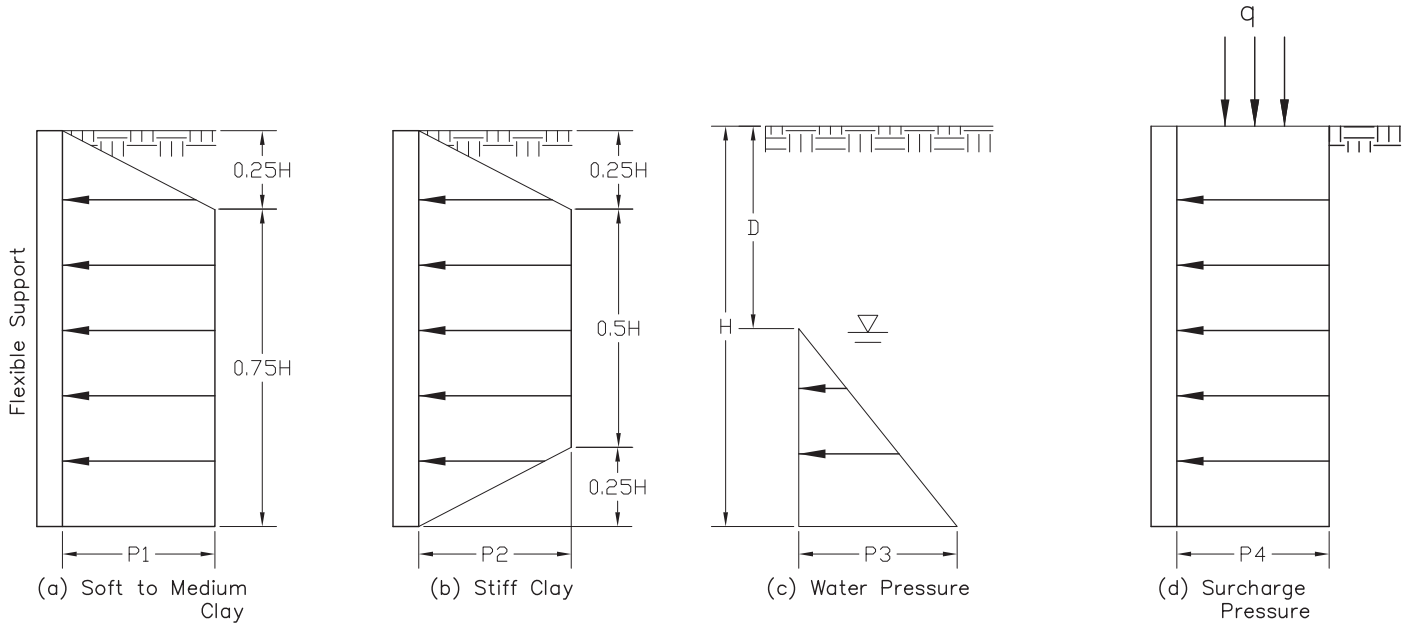

Empirical Pressure Distributions

Where:
H = Total excavation depth, feet
D = Depth to water table, feet
P1 = Lateral earth pressure = γH-4C, psf
P2 = Lateral earth pressure = 0.4γH, psf
P3 = Water pressure = γ_w (H-D), psf
P4 = Lateral earth pressure caused by surcharge = qK_a, psf
γ = Effective unit weight of soil, pcf
γ_w = Unit weight of water, pcf
C = Drained shear strength or cohesion, psf
K_a = Coefficient of active earth pressure

Notes:
1. All pressures are additive.
2. No safety factors are included.
3. For use only during long term construction.
4. If γH/C < 4, use section (b),
   If 4 < γH/C < 6, use larger of section (a) or (b),
   If γH/C > 6, use section (a).

Reference: Peck, R.B. (1969), "Deep Excavation and Tunneling in soft Ground", 7th ICSMFE, State of art volume, pp. 225-290.

AYLES ENGINEERING CORP.

LATERAL PRESSURE DIAGRAMS
FOR OPEN CUTS IN COHESIVE SOIL - SHORT TERM CONDITIONS

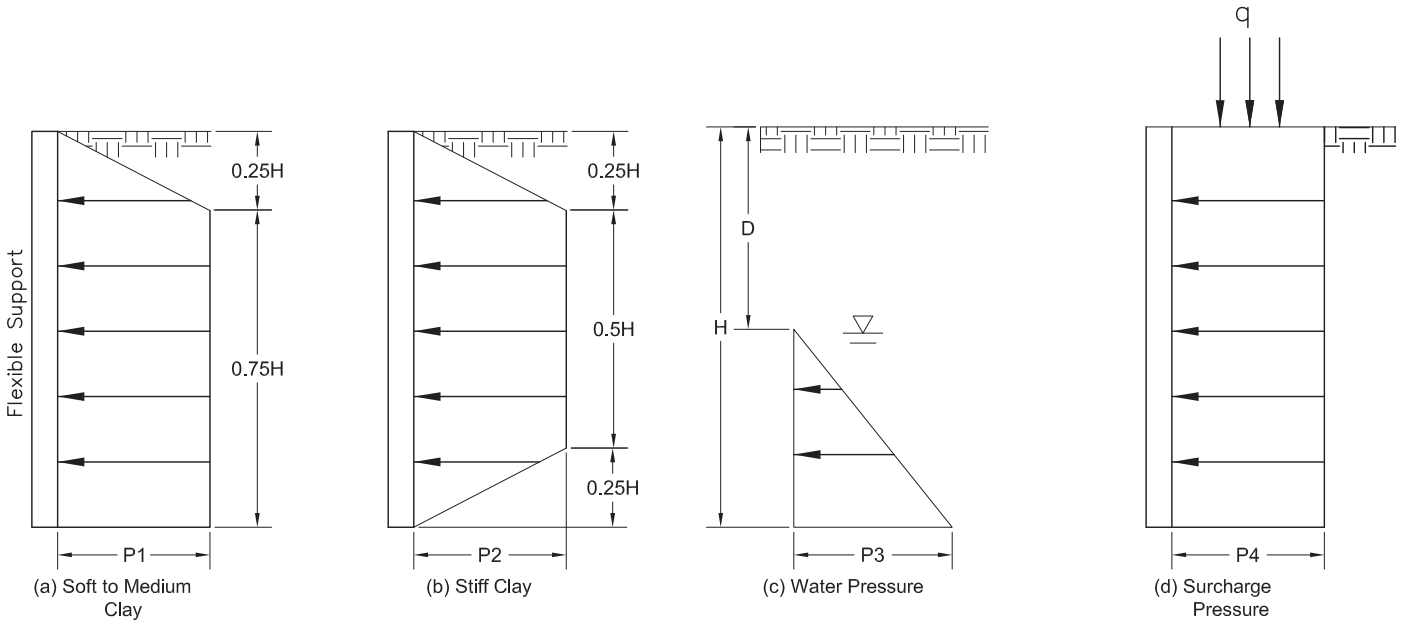

Empirical Pressure Distributions

Where:
H = Total excavation depth, feet
D = Depth to water table, feet
P1 = Lateral earth pressure = $\gamma H - 4S_u$, psf
P2 = Lateral earth pressure = $0.2\gamma H$, psf
P3 = Water pressure = γ_w (H-D), psf
P4 = Lateral earth pressure caused by surcharge = qK_a, psf
γ = Effective unit weight of soil, pcf
γ_w = Unit weight of water, pcf
S_u = Undrained shear strength = $q_u/2$, psf
q_u = Unconfined compressive strength, psf
K_a = Coefficient of active earth pressure

Notes:
1. All pressures are additive.
2. No safety factors are included.
3. For use only during short term construction.
4. If $\gamma H/S_u < 4$, use section (b),
   If $4 < \gamma H/S_u < 6$, use larger of section (a) or (b),
   If $\gamma H/S_u > 6$, use section (a).

Reference: Peck, R.B. (1969), "Deep Excavation and Tunneling in soft Ground", 7th ICSMFE, State of art volume, pp. 225-290.

AYLES ENGINEERING CORP.

LATERAL PRESSURE DIAGRAMS
FOR OPEN CUTS IN SAND

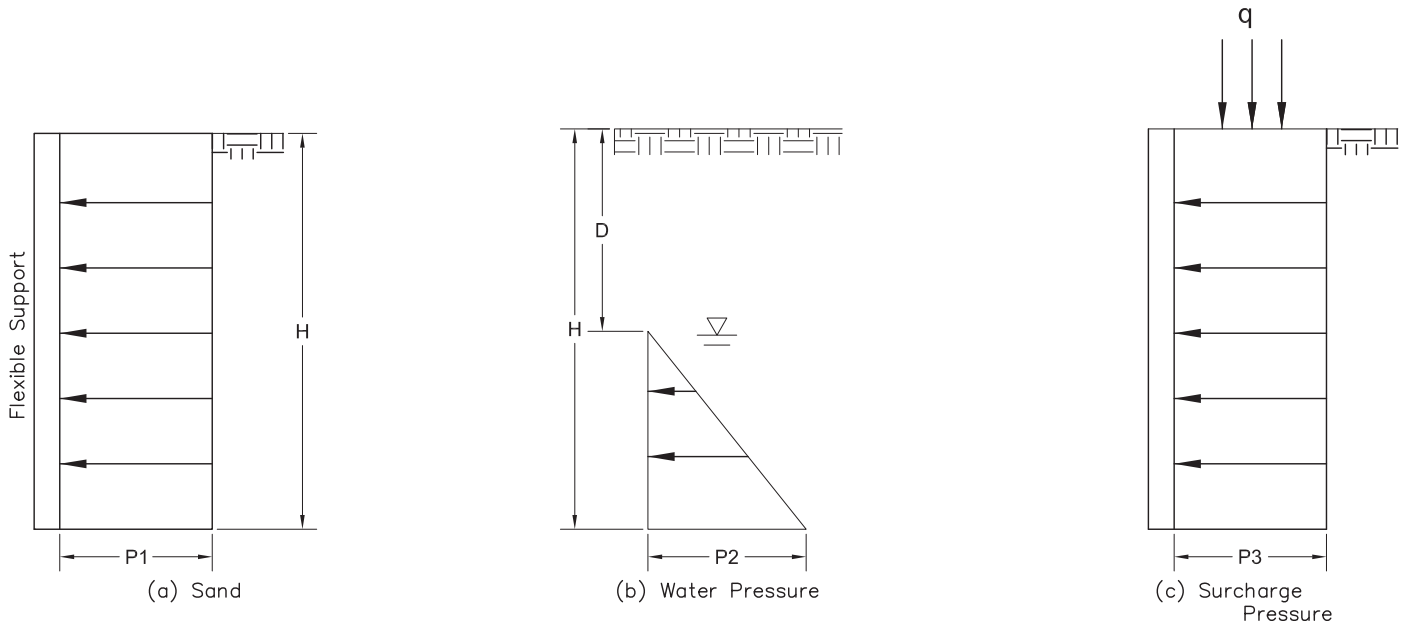

Empirical Pressure Distributions

Where:
H = Total excavation depth, feet
D = Depth to water table, feet
P1 = Lateral earth pressure = $0.65*\gamma HK_a$, psf
P2 = Water pressure = γ_w (H-D), psf
P3 = Lateral earth pressure caused by surcharge = qK_a, psf
γ = Effective unit weight of soil, pcf
γ_w = Unit weight of water, pcf
K_a = Coefficient of active earth pressure = $(1-\sin\varphi)/(1+\sin\varphi)$
φ = Drained friction angle

Notes:
1. All pressures are additive.
2. No safety factors are included.

Reference: Peck, R.B. (1969), "Deep Excavation and Tunneling in soft Ground", 7th ICSMFE, State of art volume, pp. 225-290.

BOTTOM STABILITY FOR BRACED EXCAVATION IN CLAY

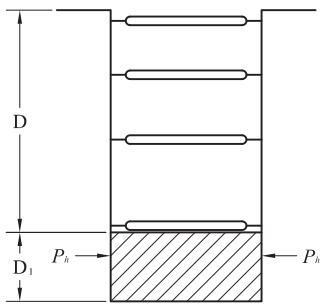

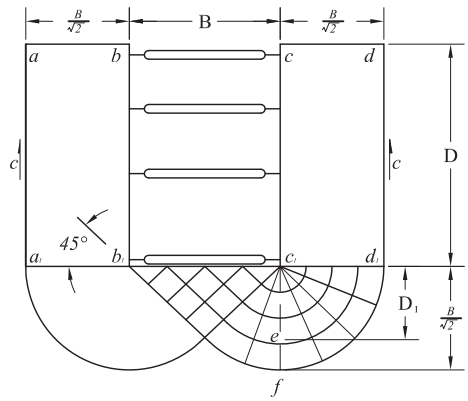

Factor of Safety against bottom of heave,

$$F.S = \frac{NcC}{(\gamma D+q)}$$

where, Nc = Coefficient depending on the dimension of the excavation (see Figure at the bottom)
C = Undrained shear strength of soil in zone immediately around the bottom of the excavation,
γ = Unit weight of soil,
D = Depth of excavation,
q = Surface surcharge.

If F.S < 1.5, sheeting should be extended further down to achieve stability

$$\textit{Depth of Buried Length, } (D_1) = \frac{1.5(\gamma D+q)-NcC}{(C/B)-0.5\gamma} \; ; D_1 \geq 5\ ft.$$

Pressure on buried length, P_h:

For $D_1 < 0.47B$; $P_h = 1.5\ D_1(\gamma D - 1.4\ CD/B - 3.14C)$

For $D_1 > 0.47B$; $P_h = 0.7\ (\gamma DB - 1.4\ CD - 3.14CB)$

where; B = width of excavation

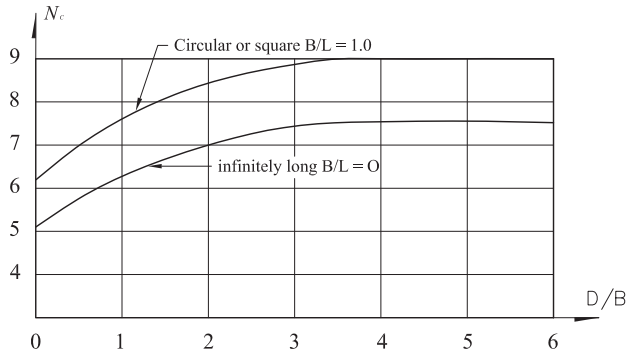

N_c rectangular = $(0.84 + 0.16B/L)N_c$ square

Reference: Bjerrum, L. and Eide, O., Stability of Strutted Excavations in Clay, Geotechnique, 6, 32-47 (1956).

THRUST FORCE CALCULATION

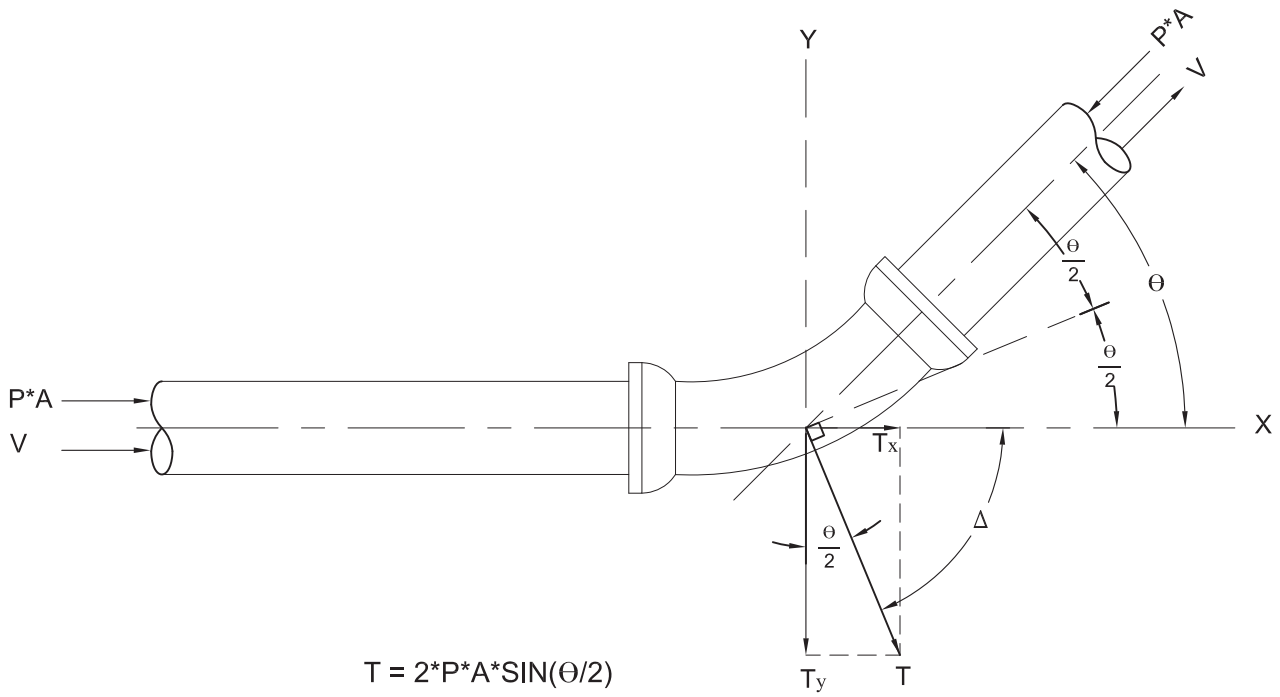

$T = 2*P*A*SIN(\Theta/2)$

$T_x = P*A*(1-COS\Theta)$

$T_y = P*A*SIN\Theta$

$\Delta = (90-\Theta/2)$

Where:

T = resultant thrust force

T_x= thrust force component along the X axis

T_y= thrust force component along the Y axis

P = maximum sustained pressure

A = cross-sectional area of pipe = $(\pi/4)*(D)^2$

D = inside diameter conduit

Θ = angle of bend

Δ = angle between X axis and T

V = fluid velocity

Reference: American Water Works Association, Manual MA, "Concrete Pressure Pipe".

THRUST FORCE EXAMPLE CALCULATION

Trust Force Example Calculation

$T = 2*P*A*SIN(\Theta/2)$

$T_x = P*A*SIN(1-COS\Theta)$

$T_y = P*A*SIN\ \Theta$

Where:

T = resultant thrust force

T_x = thrust force component along the X axis

T_y = thrust force component along the Y axis

P = maximum sustained pressure

A = cross-section area of pipe = $(\pi/4)*(D)^2$

D = inside diameter of conduit

U = angle of bend

Given: D = 24", P = 200 psi, $\Theta = 60°$

Find: T, T_x and T_y

$A = (\pi/4)*(24)^2 = 452.39\ in^2$

T = 2*200*452.39*SIN(60/2) = 90,478 lb

T_x = 200*452.39*(1-COS60) = 45,239 lb

T_y = 200*452.39*SIN60 = 78,356 lb

DESIGN PARAMETERS FOR BEARING THRUST BLOCK

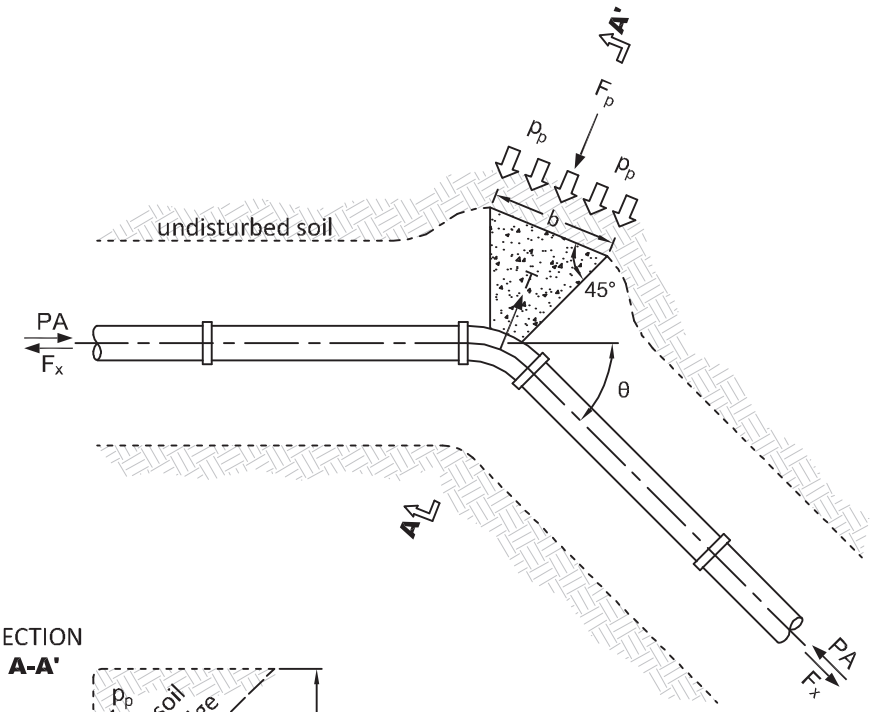

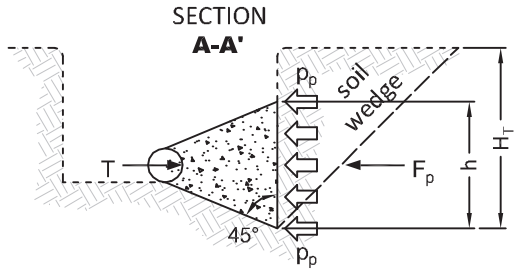

Required Bearing Area:

$$A_b = hb = \frac{F_s\, 2PA \sin\frac{\theta}{2}}{p_p}$$

Required Block Width:

$$b = \frac{2F_s\, PA \sin\frac{\theta}{2}}{h\, p_p}$$

Where:

$p_p = \Upsilon H_c K_p + 2C\sqrt{K_p}$

$K_p = \tan^2\left(45° + \frac{\varnothing}{2}\right)$

Where:

T = resultant thrust force on the bend

F_p = resistance force developed by passive soil pressure

A_b = minimum bearing area of block base

h = height of thrust block

b = width of thrust block

A = pipe cross-sectional area

θ = bend deflection angle

p_p = passive soil pressure

H_T = depth to bottom of block

Υ = soil unit weight

K_p = coefficient of passive earth pressure

$\varnothing$ = soil internal friction angle

C = soil cohesion

F_s = factor of safety (usually 1.5)

H_c = mean depth from ground surface to the plane of resistance (center of bearing area of a thrust block)

p = maximum sustained pressure

F_x = conduit frictional resistance per unit length

Relation between the Width of the Surface Depression (i/a) and the Depth of the Cavity (z/a) for Tunnels

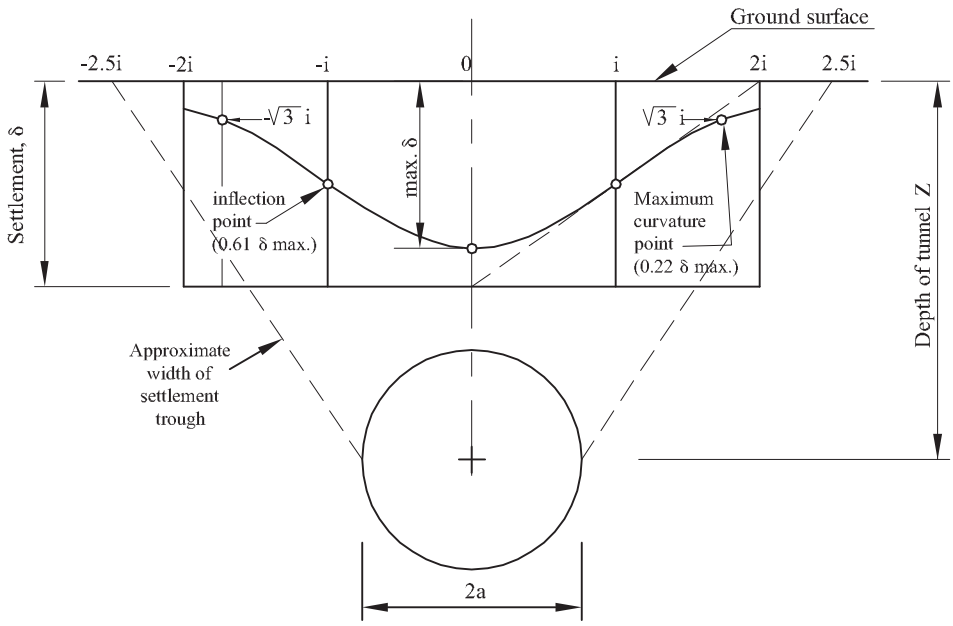

Volume of depression = 2.5i δ max.

(a)

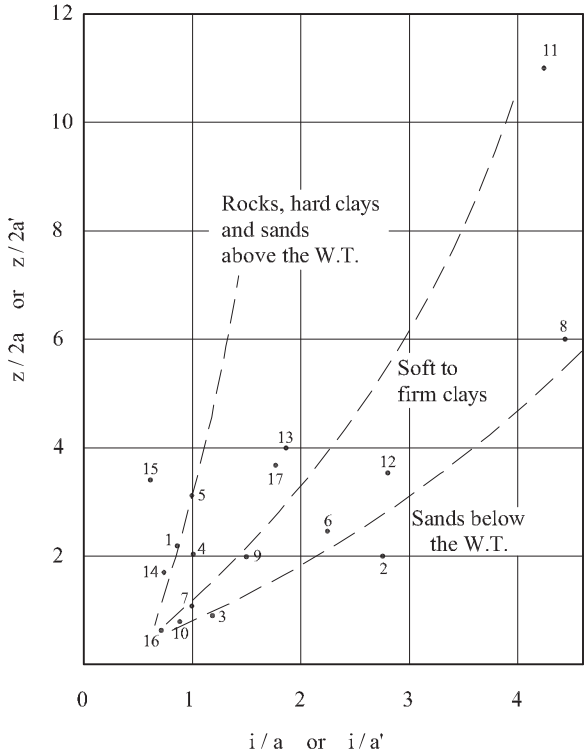

(b)

Reference: Peck, R. B. (1969) "Deep Excavations and Tunneling in Soft Ground," Proceedings, Seventh International Conference on Soil Mechanics and Foundation Engineering, Mexico City, State of the Art Volume, pp. 225-290.

AVILES ENGINEERING CORP.

Tunnel Behavior: Sands and Gravels
(Terzaghi, 1977)

Designation	Degree of Compactness	Tunnel Behavior	
		Above Water Table	Below Water Table
Very Fine Clean Sand	Loose, $N \leq 10$	Cohesive Running	Flowing
	Dense, $N > 30$	Fast Raveling	Flowing
Fine Sand with Clay Binder	Loose, $N \leq 10$	Rapid Raveling	Flowing
	Dense, $N > 30$	Firm or Slowly Raveling	Slowly Raveling
Sand or Sandy Gravel with Clay Binder	Loose, $N < 10$	Rapid Raveling	Rapidly Raveling or Flowing
	Dense, $N > 30$	Firm	Firm/slow Raveling
Sandy Gravel and Medium to Coarse Sand		Running Ground. Uniform ($C_u < 3$) and loose ($N < 10$) materials with round grains run much more freely than well graded ($C_u > 6$) and dense ($N > 30$) ones with angular grains.	Flowing Conditions combined with extremely heavy discharge of water.

TBM FAMILY OF MACHINES
(From Kessler & Moore,)

Machine Type	Typical Machine Diameters	Ground Condition TBM is Best Suited For
Pipe Jacking Machines	Up to approx. 10 – 13 ft (3 - 4m)	Any ground
Small Bore Unit (SBU)	Up to 6.6 ft (2m)	Any ground
Shielded TBMs	6.6 – 46 ft (2 to 14m) plus	Soft ground above the water table
Mix Face TBMs	6.6 – 46 ft (2 to 14m) plus	Mixed ground above the water table
Slurry TBMs	6.6 – 46 ft (2 to 14m) plus	Coarse-grained soft ground below the water table
EPB TBMs	6.6 – 46 ft (2 to 14m) plus	Fine-grained soft ground below the water table
Hard Rock TBMs	6.6 – 46 ft (2 to 14m) plus	Hard rock
Reamer TBMs	Various	Hard rock
Multi-head TBMs	Various	Various

Reference: Dots Oyenuga (2004), "FHWA Road Tunnel Design Guidelines", Pages 8 and 10, published by U.S. Department of Transportation Federal Highway Administration, Report No. FHWA-IF-05-023, Washington DC.

AVILES ENGINEERING CORP.

Methods of Controlling Groundwater
(after Karol, 1990)

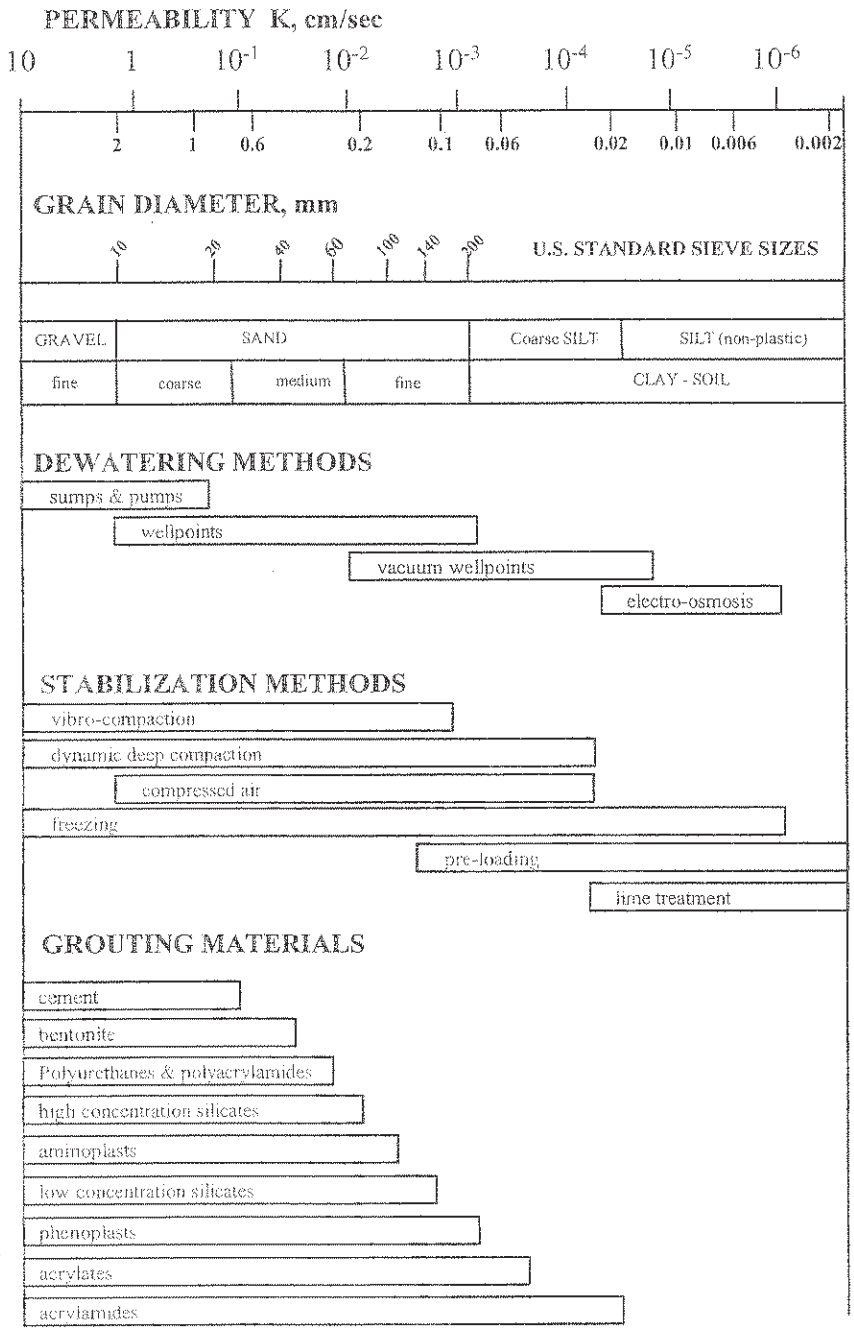

Note: 1 cm/sec = 0.4 in/sec; 1 mm = 0.04 in.

Reference: Dots Oyenuga (2004), "FHWA Road Tunnel Design Guidelines", Page 9, published by U.S. Department of Transportation Federal Highway Administration, Report No. FHWA-IF-05-023, Washington DC.

AVILES ENGINEERING CORP.

APPENDIX E

Plates E-1 to E-2 DARWin v3.0 Computer Program Output

1993 AASHTO Pavement Design

DARWin Pavement Design and Analysis System

A Proprietary AASHTOWare
Computer Software Product
Aviles Engineering Corporation

Rigid Structural Design Module

Pavement Design based on 18-kip ESAL loading.

Rigid Structural Design

Pavement Type	JRCP
18-kip ESALs Over Initial Performance Period	3,391,831
Initial Serviceability	4.5
Terminal Serviceability	2.5
28-day Mean PCC Modulus of Rupture	600 psi
28-day Mean Elastic Modulus of Slab	3,600,000 psi
Mean Effective k-value	74 psi/in
Reliability Level	95 %
Overall Standard Deviation	0.35
Load Transfer Coefficient, J	3.2
Overall Drainage Coefficient, Cd	1.2
Calculated Design Thickness	8.61 in

Effective Modulus of Subgrade Reaction

Period	Description	Roadbed Soil Resilient Modulus (psi)	Base Elastic Modulus (psi)
1	1	3,000	30,000

Base Type	-
Base Thickness	8 in
Depth to Bedrock	100 ft
Projected Slab Thickness	9 in
Loss of Support Category	1
Effective Modulus of Subgrade Reaction	74 psi/in

PLATE E-1

1993 AASHTO Pavement Design

DARWin Pavement Design and Analysis System

A Proprietary AASHTOWare
Computer Software Product
Aviles Engineering Corporation

Rigid Structural Design Module

Pavement Design based on 18-kip ESAL loading.

Rigid Structural Design

Pavement Type	JRCP
Slab Thickness for Performance Period Traffic	9 in
Initial Serviceability	4.5
Terminal Serviceability	2.5
28-day Mean PCC Modulus of Rupture	600 psi
28-day Mean Elastic Modulus of Slab	3,600,000 psi
Mean Effective k-value	74 psi/in
Reliability Level	95 %
Overall Standard Deviation	0.35
Load Transfer Coefficient, J	3.2
Overall Drainage Coefficient, Cd	1.2
18-kip ESALs Over Initial Performance Period	4,474,678

Effective Modulus of Subgrade Reaction

Period	Description	Roadbed Soil Resilient Modulus (psi)	Base Elastic Modulus (psi)
1	1	3,000	30,000

Base Type	-
Base Thickness	8 in
Depth to Bedrock	100 ft
Projected Slab Thickness	9 in
Loss of Support Category	1
Effective Modulus of Subgrade Reaction	74 psi/in

PLATE E-2

AVILES ENGINEERING CORP.

APPENDIX F

Plates F-1 to F-3 Piezometer Installation and Plugging Reports

STATE OF TEXAS WELL REPORT for Tracking #409816

Owner:	**City of Houston**	Owner Well #:	**pz-1**
Address:	**611 Walker floor 14 Houston, TX 77002**	Grid #:	**65-20-9**
Well Location:	**6600 W. Airport Houston, TX 77070**	Latitude:	**29° 38' 40.4" N**
		Longitude:	**095° 30' 18.9" W**
Well County:	**Harris**	Elevation:	**60 ft. above sea level**
Type of Work:	**New Well**	Proposed Use:	**Monitor**

Drilling Start Date: **8/25/2015** Drilling End Date: **8/25/2015**

Borehole:

Diameter (in.)	*Top Depth (ft.)*	*Bottom Depth (ft.)*
4	**0**	**30**

Drilling Method: **Mud (Hydraulic) Rotary**

Borehole Completion: **Filter Packed**

Filter Pack Intervals:

Top Depth (ft.)	*Bottom Depth (ft.)*	*Filter Material*	*Size*
5	**30**	**Sand**	**20/40**

Annular Seal Data:

Top Depth (ft.)	*Bottom Depth (ft.)*	*Description (number of sacks & material)*
0	**5**	**Bentonite 1 Bags/Sacks**

Seal Method: **Poured**

Sealed By: **Driller**

Variance Number: **na**

Distance to Property Line (ft.): **na**

Distance to Septic Field or other concentrated contamination (ft.): **na**

Distance to Septic Tank (ft.): **na**

Method of Verification: **na**

Surface Completion: **Surface Sleeve Installed** **Surface Completion by Driller**

Water Level: **No Data**

Packers: **No Data**

Type of Pump: **No Data**

Well Tests: **No Test Data Specified**

Water Quality:

Strata Depth (ft.)	Water Type
No Data	**No Data**

Chemical Analysis Made: **No**

Did the driller knowingly penetrate any strata which contained injurious constituents?: **No**

The driller did certify that while drilling, deepening or otherwise altering the above described well, injurious water or constituents was encountered and the landowner or person having the well drilled was informed that such well must be completed or plugged in such a manner as to avoid injury or pollution.

Certification Data: The driller certified that the driller drilled this well (or the well was drilled under the driller's direct supervision) and that each and all of the statements herein are true and correct. The driller understood that failure to complete the required items will result in the report(s) being returned for completion and resubmittal.

Company Information: **Van and Sons Drilling Service**

319 John Alber
Houston, TX 77076

Driller Name: **Edward Van Antwerp** License Number: **3003**

Comments: **5' pvc riser, 20' pvc screen .010**
20/40 sand 5'-30'bgs

Lithology:
DESCRIPTION & COLOR OF FORMATION MATERIAL

Top (ft.)	Bottom (ft.)	Description
0	**30**	**na**

Casing:
BLANK PIPE & WELL SCREEN DATA

Dia (in.)	Type	Material	Sch./Gage	Top (ft.)	Bottom (ft.)
2	**Riser**	**Plastic (PVC)**	**40**	**0**	**5**

IMPORTANT NOTICE FOR PERSONS HAVING WELLS DRILLED CONCERNING CONFIDENTIALITY

TEX. OCC. CODE Title 12, Chapter 1901.251, authorizes the owner (owner or the person for whom the well was drilled) to keep information in Well Reports confidential. The Department shall hold the contents of the well log confidential and not a matter of public record if it receives, by certified mail, a written request to do so from the owner.

Please include the report's Tracking Number on your written request.

Texas Department of Licensing and Regulation
P.O. Box 12157
Austin, TX 78711
(512) 463-7880

STATE OF TEXAS WELL REPORT for Tracking #409818

Owner:	**City of Houston**	Owner Well #:	**pz-2**
Address:	**611 Walker floor 14 Houston, TX 77002**	Grid #:	**65-20-9**
Well Location:	**Intersection of W.Airport and Fondren Houston, TX 77070**	Latitude:	**29° 38' 39.1" N**
		Longitude:	**095° 30' 29.7" W**
	SE corner of Fondren at W. Airport	Elevation:	**60 ft. above sea level**
Well County:	**Harris**		

****This well has been plugged**** **Plugging Report Tracking #153360**

Type of Work: **New Well** Proposed Use: **Monitor**

Drilling Start Date: **8/24/2015** Drilling End Date: **8/24/2015**

Borehole:

Diameter (in.)	Top Depth (ft.)	Bottom Depth (ft.)
4	0	30

Drilling Method: **Mud (Hydraulic) Rotary**

Borehole Completion: **Filter Packed**

Filter Pack Intervals:

Top Depth (ft.)	Bottom Depth (ft.)	Filter Material	Size
5	30	Sand	20/40

Annular Seal Data:

Top Depth (ft.)	Bottom Depth (ft.)	Description (number of sacks & material)
0	5	Bentonite 1 Bags/Sacks

Seal Method: **Poured**

Sealed By: **Driller**

Variance Number: **na**

Distance to Property Line (ft.): **na**

Distance to Septic Field or other concentrated contamination (ft.): **na**

Distance to Septic Tank (ft.): **na**

Method of Verification: **na**

Surface Completion: **Surface Sleeve Installed** **Surface Completion by Driller**

Water Level: **No Data**

Packers: **No Data**

Type of Pump: **No Data**

Well Tests: **No Test Data Specified**

Water Quality:

Strata Depth (ft.)	Water Type
No Data	**No Data**

Chemical Analysis Made: **No**

Did the driller knowingly penetrate any strata which contained injurious constituents?: **No**

The driller did certify that while drilling, deepening or otherwise altering the above described well, injurious water or constituents was encountered and the landowner or person having the well drilled was informed that such well must be completed or plugged in such a manner as to avoid injury or pollution.

Certification Data: The driller certified that the driller drilled this well (or the well was drilled under the driller's direct supervision) and that each and all of the statements herein are true and correct. The driller understood that failure to complete the required items will result in the report(s) being returned for completion and resubmittal.

Company Information: **Van and Sons Drilling Service**

319 John Alber
Houston, TX 77076

Driller Name: **Edward Van Antwerp** License Number: **3003**

Comments: **0'-5' PVC Riser**
5'-20' PVC Screen
20'-25' PVC Riser
Bentonite 0'-5'
20/40 Sand 5'-30'

Lithology:
DESCRIPTION & COLOR OF FORMATION MATERIAL

Top (ft.)	Bottom (ft.)	Description
0	**30**	**na**

Casing:
BLANK PIPE & WELL SCREEN DATA

Dia (in.)	Type	Material	Sch./Gage	Top (ft.)	Bottom (ft.)
2	**Riser**	**Plastic (PVC)**	**40**	**0**	**5**

IMPORTANT NOTICE FOR PERSONS HAVING WELLS DRILLED CONCERNING CONFIDENTIALITY

TEX. OCC. CODE Title 12, Chapter 1901.251, authorizes the owner (owner or the person for whom the well was drilled) to keep information in Well Reports confidential. The Department shall hold the contents of the well log confidential and not a matter of public record if it receives, by certified mail, a written request to do so from the owner.

Please include the report's Tracking Number on your written request.

Texas Department of Licensing and Regulation
P.O. Box 12157
Austin, TX 78711
(512) 463-7880

STATE OF TEXAS PLUGGING REPORT for Tracking #153360

Owner:	**City of Houston**	Owner Well #:	**pz-2**
Address:	**611 Walker floor 14** **Houston, TX 77002**	Grid #:	**65-20-9**
Well Location:	**Intersection of W.Airport and Fondren** **Houston, TX 77070**	Latitude:	**29° 38' 39.1" N**
		Longitude:	**095° 30' 29.7" W**
	SE corner of Fondren at W. Airport	Elevation:	**60**
Well County:	**Harris**		

Well Type: **Monitor**

Drilling Information

Company: **Van and Sons Drilling Service** Date Drilled: **8/24/2015**

Driller: **Edward Lee Van Antwerp** License Number: **3003**

Well Report Tracking #409818

	Diameter (in.)	Top Depth (ft.)	Bottom Depth (ft.)
Borehole:	4	0	30

Plugging Information

Date Plugged: **11/23/2015** Plugger: **Elliot Van Antwerp**

Plug Method: **Tremmie pipe cement from bottom to top**

Casing Left in Well:

Dia (in.)	Top (ft.)	Bottom (ft.)
2	0	25

Plug(s) Placed in Well:

Top (ft.)	Bottom (ft.)	Description (number of sacks & material)
0	25	Cement 2 Bags/Sacks

Certification Data: The driller certified that the driller plugged this well (or the well was plugged under the driller's direct supervision) and that each and all of the statements herein are true and correct. The driller understood that failure to complete the required items will result in the reports(s) being returned for completion and resubmittal.

Company Information: **Van and Sons Drilling Service**

319 John Alber
Houston, TX 77076

Driller Name: **Edward Van Antwerp** License Number: **3003**

Apprentice Name: **Elliot Van Antwerp**

Comments: **No Data**