GEOTECHNICAL INVESTIGATION
SURFACE WATER TRANSMISSION PROGRAM -
96-INCH CLINTON DRIVE
CONDITION ASSESSMENT
WBS. NO. S-000901-0008-3
HOUSTON, TEXAS

REPORT NO. 1140195201

Reported to:

LOCKWOOD, ANDREWS & NEWNAM, INC.

Houston, Texas

Submitted by:

GEOTEST ENGINEERING, INC.

Houston, Texas

Key Map Nos. 495 T, P, N, U & Z and 496 W and X

GEOTEST ENGINEERING, INC.

Geotechnical Engineers & Materials Testing

5600 Bintliff Drive Houston, Texas 77036 Telephone: (713) 266-0588
Fax: (713) 266-2977

Report No. 1140195201
March 21, 2014

Mr. Gregory J. Henry, P.E.
Lockwood, Andrews & Newnam, Inc.
2925 Briarpark Drive
Houston, Texas 77042-3720

Reference: Geotechnical Investigation
Surface Water Transmission Program –
96-inch Clinton Drive Condition Assessment
WBS No. S-000901-0008-3
Houston, Texas

Dear Mr. Henry:

Presented herein is the geotechnical investigation final report for the referenced project. A draft report was submitted to you on August 28, 2013. This report contains our recommendations for the trench safety, bedding and backfill criteria for the gate valves and piping, permanent valves (temporary and permanent), construction of manholes and grid extensions. A revised draft report was submitted to you on December 24, 2013. This final report supersedes the previously submitted reports, transmittals, etc. for the referenced project. This study was authorized by Task Order No. 990/2 dated June 3, 2013 and Task Order 1027/2, dated November 15, 2013.

We appreciate this opportunity to be of service to you. Please call on us when we can be of further assistance to you.

Sincerely,
GEOTEST ENGINEERING, INC.

K. Naresh

Naresh Kolli, P.E.
Assistant Project Manager

STATE OF TEXAS
3/21/14
NARESH KOLLI
110928
LICENSED
PROFESSIONAL ENGINEER

B. C.

Mohan Ballagere, P.E.
Vice President

STATE OF TEXAS
3/21/14
MOHAN BALLAGERE
87622
LICENSED
PROFESSIONAL ENGINEER

MB/ego
Copies Submitted: (2+1-pdf)
PC38\Geotechnical\40195201F.DOC

TABLE OF CONTENTS

		Page
EXECUTIVE SUMMARY		1
1.0	INTRODUCTION	4
1.1	General	4
1.2	Description of the Project	4
1.3	Scope of Work	5
2.0	SUBSURFACE INVESTIGATION PROGRAM	6
2.1	Geotechnical Borings	6
3.0	LABORATORY TESTING PROGRAM	7
4.0	SUBSURFACE AND SITE CONDITIONS	8
4.1	Geology of the Coastal Plain	8
4.2	Natural Hazards	
4.2.1	Subsidence	9
4.2.2	Geologic Faults in Vicinity of Site	9
4.3	Site Stratigraphy and Geotechnical Characterization	10
4.4	Groundwater	11
4.5	Environmental Concerns	11
5.0	GEOTECHNICAL ENGINEERING RECOMMENDATIONS	12
5.1	Excavation	
5.1.1	Geotechnical Parameters	12
5.1.2	Excavation Stability	13
5.2	Excavation Dewatering	15
5.3	Bedding and Backfill	15
5.4	Lateral Earth Pressure Diagram	16
5.5	Allowable Bearing Pressure and Hydrostatic Uplift Resistance	
5.5.1	Allowable Bearing Pressure	16
5.5.2	Hydrostatic Uplift Resistance	17
6.0	LIMITATIONS	18
7.0	AUTHORIZATIONS AND CREDITS	19
8.0	REFERENCES	20

ILLUSTRATIONS

	Figure
Vicinity Map	1
Plan of Borings	2.1 thru 2.3
Excavation Support Earth Pressure	3.1 thru 3.4
Stability of Bottom for Braced Cut	4
Lateral Earth Pressure Diagram for Permanent Wall	5.1 and 5.2
Uplift Pressure and Resistance	6

TABLES

	Table
Summary of Boring Information	1
Geotechnical Design Parameter Summary Open-Cut Excavation	2

APPENDIX A

	Figure
Log of Borings	A-1 thru A-12
Symbols and Terms Used on Boring Logs	A-13

APPENDIX B

	Figure
Summary of Laboratory Test Results	B-1 thru B-12
Grain Size Distribution Curve	B-13

EXECUTIVE SUMMARY

Lockwood, Andrews & Newnam, Inc. (LAN) was selected by the City of Houston to provide engineering services in support of Surface Water Transmission Program (SWTP) for Condition Assessment of 96-inch Water Line along Clinton Drive from Wayside to IH-610 and referred to as WBS No. S-000901-0008-3. LAN then selected Geotest Engineering, Inc. (Geotest) to provide geotechnical engineering services related to the design and construction of the project.

This investigation (including additional) included drilling and sampling twelve (12) borings to depths ranging from 15 to 40 feet, performing laboratory tests on soil samples recovered from the borings, and performing engineering analyses and preparing a geotechnical report.

The principal findings and conclusions developed from this investigation are summarized below:

- Based on review of Harris-Galveston coastal subsidence district maps, it was noted that subsidence in the Houston area has substantially decreased in recent years. During 1906 through 2000, subsidence in the project area appears to have been between 4 and 5 feet. During 1978 through 2000, subsidence in the project area appears to have been between 1.5 and 2.5 feet. During 1995 through 2000, subsidence in the project area appears to have been between 0.1 and 0.3 feet.

- Based on the available information, it appears the eastern portion of the project area lies in the vicinity of Clinton Salt dome. No documentation of surface faults which would impact the project site were found. The nearest known surface fault is the Clinton Fault and is located approximately 1,000 feet east of the project area.

- The subgrade soil below the existing pavement or below existing ground surface at or near the proposed gate valves, piping repair, manhole locations and grid extensions consists of predominantly cohesive soils consisting of soft to hard, gray, brown, yellowish brown and reddish brown Fat Clay, Fat Clay w/sand, Lean Clay w/sand, Silty

Clay and Sandy Lean Clay to the explored depths of 15, 25 and 40 feet with the exception of boring B-4B at location 4, boring B-5B at location 5 and borings B-9A, B-10 and B-11. At boring B-4B, the subsurface soils below the pavement consists of fill soils consisting of very soft to medium stiff sandy lean clay with very loose brown sand to a depth of 18 feet. The fill soils were underlain by very soft to hard fat clay to the explored depth of 25 feet. In boring B-5B, the subsurface soils below the existing grade consists of fill consisting of stiff to very stiff dark gray fat clay and lean clay with sand to depth of 6 feet. The fill soils were underlain by very stiff reddish brown lean clay to a depth of 10 feet and below lean clay, loose brown silt was encountered to a depth of 12 feet underlain by very stiff to hard gray, brown and yellowish brown Fat Clay and Sandy Lean Clay to the explored depth of 25 feet. At boring B-9A, the subsurface soil below the pavement consists of stiff to hard dark gray and brown and gray Lean Clay w/sand and Sandy Lean Clay to a depth of 10 feet. Underlying the clays, medium dense gray Fine Sand w/silt to the explored depth of 15 feet. In boring B-10, the subsurface soil below the existing pavement consists of fill consisting of stiff to very stiff dark gray and brown and reddish brown and gray Lean Clay w/sand, ferrous and calcareous nodules to the explored depth of 15 feet. In boring B-11, the subsurface soil below the pavement consists of fill consisting of soft to very stiff, yellowish brown, brown and gray Sandy Lean Clay and loose clayey sand to a depth of 11 feet. Underlying the fill, medium stiff to hard reddish brown and gray Lean Clay w/sand was obtained to explored depth of 15 feet. Fill soils consisting of medium stiff to hard brown and gray, dark brown sandy lean clay, fat clay w/grass roots, gravel, shell and wood pieces were encountered to depths of 2 to 10 feet in borings B-1, B-3, B-3B, B-4, B-4A, B-6 and B-8A.

- The groundwater was initially encountered at depths of 7 to 21 feet in borings B-1, B-3B, B-4B, B-5B, B-6 and B-11, respectively during drilling. The ground water measured 15 minutes after water was first encountered is at depths of 5.6 to 18.7 feet in these borings. No groundwater was encountered in all other borings drilled for the project during field investigation. These measurements are presented on the log of borings.

- All excavations and trenching operations should be in accordance with OSHA standards.

- In general, the City of Houston Standard Specification 02521 “Gate Valves;” 02522 "Butterfly Valves"; Section 02317 “Excavation and Backfill for Utilities,” and Section 02320 “Utility Backfill Material” and Section 02317-04 "Water Distribution Main for Open Cut" should be followed for bedding and backfill.

- The foundation recommendations pertaining to the construction of valves and manholes are detailed in Sections 5.4 and 5.5 of this report.

1.0 INTRODUCTION

1.1 General

Lockwood, Andrews & Newnam, Inc. (LAN) was selected by the City of Houston to provide engineering services in support of Surface Water Transmission Program (SWTP) for Condition Assessment of 96-inch Water Line along Clinton Drive from Wayside to IH-610 and referred to as WBS No. S-000901-0008-3. LAN then selected Geotest Engineering, Inc. (Geotest) to provide geotechnical engineering services related to the design and construction of the project.

1.2 Description of the Project

The proposed improvements as part of Condition Assessment for 96-inch Water Line along Clinton Drive is given below:

- Location 1 (28' depth) – a pipe repair will be made to the existing 96-inch water line. No large structure is anticipated.
- Location 2 (18' depth) – a 6" gate valve and piping will be installed outside of the existing vacuum relief valve vaults.
- Location 3 (20' depth) – a 6" gate valve and piping will be installed outside of the existing vacuum relief valve vaults. There is another vacuum relief valve vault located approximately 750 feet. The same work will be taking place at this location.
- Location 4 (20' depth) – a 96" permanent valve (gate or butterfly), 96-inch temporary valve and two (2) 72-inch manholes will be installed. Structural support will be needed for the permanent and temporary valve.
- Location 5 (18' depth) – a 96" permanent valve (gate or butterfly), 96-inch temporary valve, and two (2) 72-inch manholes will be installed. Structural support will be needed for the permanent and temporary valve.
- Location 6 (33' depth) – a 96" valve installation.

- Grid Extensions – approximately 3,020 LF of 8" to 12" Interconnect between Locations 2 and 6 and 800 LF of 12" Waterline between Location 2 and 3.

1.3 Scope of Work

The purposes of this investigation were to determine the subsurface conditions and to develop geotechnical recommendations for the Condition Assessment of 96-inch Water Line at six locations including grid extensions along Clinton Drive. The scope of this investigation was based on the information furnished by LAN and consists of the following tasks.

- Drilled and sampled a total of twelve (12) borings. Six (6) borings to depths ranging from 25 to 40 feet with one (1) each for each location were drilled in the initial investigation. Six (6) additional borings each to a depth of 15 feet were drilled for grid extensions.

- Performed laboratory tests on soil samples recovered from the borings to develop the engineering properties of the soil.

- Performed engineering analyses to develop geotechnical recommendations pertinent to the pipe repair, construction of gate valves, manholes and grid extensions as part of Condition Assessment of 96-inch Water Line along Clinton Drive. The recommendations will include trench safety, bedding and backfill criteria, ground water control and foundation recommendations for manholes and structural support for permanent and temporary valves.

- Prepared a geotechnical report in accordance with the City of Houston Guidelines and the SWTP Manual (Reference 1) including all field data, laboratory test data, and geotechnical recommendations.

2.0 SUBSURFACE INVESTIGATION PROGRAM

2.1 Geotechnical Borings

Subsurface conditions were explored by drilling and sampling a total of twelve (12) soil borings. Six (6) soil borings (B-1 through B-6) to depths ranging from 25 to 40 feet were drilled in the initial investigation. Six (6) additional borings (B-8 through B-13) each to a depth of 15 feet were drilled for the grid extensions. Boring numbered B-7 was left out by LAN during scope development for additional borings for the grid extensions. All borings were drilled with a truck-mounted rotary drilling rig. Hard obstruction was encountered at borings B-2, B-3, B-4, B-5, B-8 and B-9 at depths of 10" to 10 feet and the borings were offset to B-2A, B-3B, B-4B, B-5B, B-8A and B-9A. The approximate boring locations are shown on Figures 2.1 through 2.4. The survey information (Northing and Easting coordinates and ground surface elevation) of the completed bore holes were not available to us at the time of preparation of this updated report.

The samples were obtained continuously to a 15-foot and 20-foot depth and at 5-foot intervals thereafter in all the borings. In general, samples of cohesive soils were obtained with a 3-inch thin-walled tube sampler in accordance with ASTM Method D 1587 and granular soils were sampled with a 2-inch split-barrel sampler in accordance with ASTM Method D 1586. Each sample was removed from the sampler in the field, carefully examined and then logged by an experienced soils technician. Suitable portions of each sample were sealed and packaged for transportation to Geotest's laboratory. The shear strength of cohesive soil samples was estimated using a pocket penetrometer in the field. Driving resistances for the split-barrel samples were recorded as "blows per foot" on the boring logs. All borings were grouted with cement bentonite grout after completion of drilling and obtaining water level measurements.

Detailed descriptions of the soils encountered in the borings are given on the boring logs presented on Figures A-1 through A-12 in Appendix A. A key to symbols and terms used on boring logs is given on Figure A-13 in Appendix A.

3.0 LABORATORY TESTING PROGRAM

The laboratory testing program was designed to evaluate the pertinent physical properties and shear strength characteristics of the subsurface soils. Classification tests were performed on selected samples to aid in soil classification.

Undrained shear strengths of selected cohesive samples were measured by unconsolidated undrained (UU) triaxial (ASTM D2850) tests. The results of the UU triaxial compression tests are plotted on the boring logs as solid squares. The shear strength of cohesive samples was measured in the field with a calibrated hand pocket penetrometer and also in the laboratory with a Torvane. The shear strength values obtained from the penetrometer and Torvane are plotted on the boring logs as open circles and triangles, respectively.

Measurements of moisture content and dry unit weight were taken for each UU triaxial compression test sample. Moisture content (ASTM D2216) measurements were also made on selected samples to define the moisture profile at each boring location. The liquid and plastic limit tests (ASTM D4318) were performed on appropriate samples. The percent passing No. 200 sieve (ASTM D1140) and sieve analysis (ASTM D422) tests were performed on selected samples. The results of all tests are plotted or summarized on the boring logs. The summary of laboratory test results is also presented in a tabular form on Figures B-1 through B-12 in Appendix B. Grain size distribution curves are presented on Figure B-13 in Appendix B.

4.0 SUBSURFACE AND SITE CONDITIONS

4.1 Geology of the Coastal Plain

The City of Houston is situated on the Texas Coastal Plain which is a part of the northern flank of the Gulf Coast Geosyncline. The Gulf Coast Geosyncline consists of great thicknesses of geologically unconsolidated sediments which were transported as alluvium from inland sources during interglacial stages of the Pleistocene Epoch. Four interglacial stages (periods when the continental glaciers were receding) occurred during this Epoch. The most recent two interglacial stages, the Peorian (70,000 to 100,000 years before present) and the Sangamon (160,000 to 300,000 years before present), were the periods when the Beaumont and Lissie Formations were deposited, respectively. The City of Houston is situated on these two formations.

Both the Beaumont and Lissie formations are a part of the fluvial and marine coastal complex resulting from the glacial cycles within the Pleistocene/Holocene epoch. Seaward the lithologies are primarily dominated by clays, often interspersed with coarser sediments, primarily silts and sands. The clays of the Beaumont formation are overconsolidated and slickensided as a result of exposure to weathering during glacial retrenchment and cyclic wetting and drying. The lithologic pattern generally includes silt, sand and clay with minor amounts of calcareous nodules and iron oxide. Various mineral impregnations are associated with the lithologies. Primary among these are the ferruginous-iron-based and calcareous minerals, which include calcium carbonate. These minerals impart an acidic or alkaline characteristic to soils.

Based on the Houston Sheet, Texas, Geologic Atlas of Texas (Bureau of Economic Geology, University of Texas, 1982) the location of Condition Assessment of 96-inch Water Line along Clinton Drive project lies within the boundaries of the Beaumont Formation's surface exposure. The clays and sands of the Beaumont Formation are over-consolidated as a result of desiccation from frequent rising and lowering of the sea level and the ground water table. Consequently, clays of this formation have moderate to high shear strength and relatively low compressibility. The sands of the

Beaumont Formation are typically very fine and often silty. There is evidence in the Houston area of the occurrence of cemented material (sandstone and siltstone) deposits within this formation.

There are two principal geologic hazards that are characteristic of these younger depositionals formations of the Pleistocene Epoch. The first is land surface subsidence which is the result of heavy pumpage of water from the underlying aquifers and to a lesser extent withdrawal of oil and gas. Since creation of the Harris-Galveston Coastal Subsidence District in the mid 1970s to regulate pumpage of groundwater, subsidence has been on the decline. Subsidence is not expected to impact this project. The second hazard is the presence of active growth faults and faults resulting from piercement of the formations by mobile salt masses. These faults are nontectonic and, in fact, Houston is located in a Seismic Zone of 0 according to the Uniform Building Code.

4.2 Natural Hazards

4.2.1 Subsidence - Land surface subsidence, related to groundwater pumpage and to a lesser extent, the withdrawal of oil and gas, has probably occurred in the Houston area since the early settlers began to drill wells. During the period of 1906 to 2000, subsidence in the project area appears to have been between 4 and 5 feet.

In 1976, the State Legislature created the Harris-Galveston Subsidence District to regulate the pumpage of groundwater. Since creation of the district, the overall rate of subsidence in Harris County and the City of Houston been has substantially reduced. Subsidence in the project area during the period of 1978 to 2000 appears to have been between 1.5 and 2.5 feet. Subsidence in the project area during the period of 1995 to 2000 appears to have been between 0.1 and 0.3 feet.

4.2.2 Geologic Faults in Vicinity of Site - A review of information in the Geotest library relating to known surface and subsurface geologic faults, in the general area of the project site, was undertaken. The available information consisted of U.S. Geological Survey and NASA maps, open file reports, and information contained in our files relating to geologic faults in this area.

Based on the available information, it appears the eastern portion of the project area lies in the vicinity of Clinton Salt dome. No documentation of surface faults which would impact the project site were found. The nearest known surface fault is the Clinton Fault and is located approximately 1,000 feet east of the project area. Based on the available information, a Phase I Geological Fault Study is not needed for this project.

4.3 Site Stratigraphy and Geotechnical Characterization

The subgrade soil below the existing pavement or below existing ground surface at or near the proposed gate valves, piping repair, manhole locations and grid extensions consists of predominantly cohesive soils consisting of soft to hard, gray, brown, yellowish brown and reddish brown Fat Clay, Fat Clay w/sand, Lean Clay w/sand, Silty Clay and Sandy Lean Clay to the explored depths of 15, 25 and 40 feet with the exception of boring B-4B at location 4, boring B-5B at location 5 and borings B-9A, B-10 and B-11. At boring B-4B, the subsurface soils below the pavement consists of fill soils consisting of very soft to medium stiff sandy lean clay with very loose brown sand to a depth of 18 feet. The fill soils were underlain by very soft to hard fat clay to the explored depth of 25 feet. In boring B-5B, the subsurface soils below the existing grade consists of fill consisting of stiff to very stiff dark gray fat clay and lean clay with sand to depth of 6 feet. The fill soils were underlain by very stiff reddish brown lean clay to a depth of 10 feet and below lean clay, loose brown silt was encountered to a depth of 12 feet underlain by very stiff to hard gray, brown and yellowish brown Fat Clay and Sandy Lean Clay to the explored depth of 25 feet. At boring B-9A, the subsurface soil below the pavement consists of stiff to hard dark gray and brown and gray Lean Clay w/sand and Sandy Lean Clay to a depth of 10 feet. Underlying the clays, medium dense gray Fine Sand w/silt to the explored depth of 15 feet. In boring B-10, the subsurface soil below the existing pavement consists of fill consisting of stiff to very stiff dark gray and brown and reddish brown and gray Lean Clay w/sand, ferrous and calcareous nodules to the explored depth of 15 feet. In boring B-11, the subsurface soil below the pavement consists of fill consisting of soft to very stiff, yellowish brown, brown and gray Sandy Lean Clay and loose clayey sand to a depth of 11 feet. Underlying the fill, medium stiff to hard reddish brown and gray Lean Clay w/sand was obtained to explored depth of 15 feet. Fill soils consisting of medium stiff to hard brown and gray, dark brown sandy lean clay,

fat clay w/grass roots, gravel, shell and wood pieces were encountered to depths of 2 to 10 feet in borings B-1, B-3, B-3B, B-4, B-4A, B-6 and B-8A.

The silty clay, sandy lean clay, lean clay w/sand and lean clays are of low to medium plasticity with liquid limits ranging from 21 to 49 and plasticity indices ranging from 7 to 28. The fat clays are of high to very high plasticity with liquid limits ranging from 50 to 74 and plasticity indices ranging from 29 to 47. The fines content (percent passing No. 200 sieve) of Fine Sand w/silt is about 11 percent and the fines content of silt w/sand is about 76 percent. The fines content of sandy lean clay ranges from 55 to 65 percent. The fines content of lean clay w/sand ranges from 71 to 83 percent and the fines content of fat clay w/sand, fat clay and lean clay ranges from 79 to 100 percent.

4.4 Groundwater

The groundwater was initially encountered at depths of 7 to 21 feet in borings B-1, B-3B, B-4B, B-5B, B-6 and B-11, respectively during drilling. The ground water measured 15 minutes after water was first encountered is at depths of 5.6 to 18.7 feet in these borings. No groundwater was encountered in all other borings drilled for the project during field investigation. These measurements are presented on the log of borings.

However, it should be noted that various environmental and man-made factors, such as amount of precipitation, nearby subsurface construction activities, and change(s) in area drainage could substantially influence the groundwater levels.

4.5 Environmental Concerns

Hydrocarbon odor was encountered during drilling in boring B-2A between depths of 23 feet and 25 feet and in boring B-4B between depths of 2 feet and 4 feet. Geotest performed a Phase I Environmental Assessment for the project areas and a Phase II Environmental Study was recommended for the project areas.

5.0 GEOTECHNICAL ENGINEERING RECOMMENDATIONS

The proposed improvements, as part of Condition Assessment for 96-inch Water Line along Clinton Drive, are given below:

- Location 1 (28' depth) – a pipe repair will be made to the existing 96-inch water line. No large structure is anticipated.
- Location 2 (18' depth) – a 6" gate valve and piping will be installed outside of the existing vacuum relief valve vaults.
- Location 3 (20' depth) – a 6" gate valve and piping will be installed outside of the existing vacuum relief valve vaults. There is another vacuum relief valve vault located approximately 750 feet. The same work will be taking place at this location.
- Location 4 (20' depth) – a 96" permanent valve (gate or butterfly), 96-inch temporary valve and two (2) 72-inch manholes will be installed. Structural support will be needed for the permanent and temporary valve.
- Location 5 (18' depth) – a 96" permanent valve (gate or butterfly), 96-inch temporary valve, and two (2) 72-inch manholes will be installed. Structural support will be needed for the permanent and temporary valve.
- Location 6 (33' depth) – a 96" valve installation.
- Grid Extensions – approximately 3,020 LF of 8" to 12" Interconnect between Locations 2 and 6 and 800 LF of 12" Waterline between Location 2 and 3.

5.1 Excavation

5.1.1 Geotechnical Parameters. Based on the soil conditions revealed by the borings, geotechnical parameters were developed for the design of valves installation piping repair and manhole construction. The geotechnical design parameters are provided in Table 1. For design, the

groundwater level should be assumed to exist at the ground surface, since this condition may exist after a heavy rain or flooding.

5.1.2 Excavation Stability. The open excavation may be shored, laid back to a stable slope or some other equivalent means used to provide safety for workers and adjacent structures. The excavating and trenching operations should be in accordance with OSHA Standards, OSHA 2207, Subpart P, latest revision and the City of Houston requirements.

- Excavation Shallower Than 5 Feet – Excavations that are less than 5 feet (critical height) deep should be appropriately protected when any indication of hazardous ground movement is anticipated.

- Excavations Deeper Than 5 Feet - Excavations that are deeper than 5 feet should be sloped, shored, sheeted, braced or laid back to a stable slope or supported by some other equivalent means or protection such that workers are not exposed to moving ground or cave-ins. The slopes and shoring should be in accordance with the trench safety requirements per OSHA Standards. The following items provide design criteria for trench stability.

  In view of weak soils (loose sand fill and very soft to soft clay) encountered to a depth of 20 feet in boring B-4B and to a depth of 11 feet in boring B-11, a soil retention system is recommended and essential for permanent valves, manholes installation and waterline interconnect. Whichever system is used should remain in place until backfilling is within 5 feet of the ground surface. Based on the soil conditions and proposed excavation 20 feet deep for the permanent valve or manhole, the following alternatives can be considered for soil retention.

  1. Temporary sheet piles
  2. H-piles with wooden lagging

Sheet piles may be driven or vibrated in place. We understand that due to the proximity of the existing structures, such as existing lift station, driving/vibrating sheet piles will have some effect on existing structures and this option has to be reevaluated. It is our opinion that the H-piles with wooden lagging may be a feasible option for this project.

(i) OSHA's Soil Type. Based on the soil conditions revealed by the borings and the assumed groundwater level at surface, OSHA's soil type "C" should be used for the determination of allowable maximum slope and/or the design of a shoring system. For shoring deeper than 20 feet, an engineering evaluation is required.

(ii) Excavation Support Earth Pressure. Based on the subsurface conditions indicated by this investigation and laboratory testing results, the excavation support earth pressure diagrams were developed and are presented on Figures 3.1 through 3.4. These pressure diagrams can be used for the design of temporary excavation bracing. For a trench box, a lateral earth pressure resulting from an equivalent fluid with a unit weight of 95 pcf is recommended. The above value of equivalent fluid pressure is based upon an assumption that the groundwater level is near the ground surface, since these conditions may exist after a heavy rain or flooding. Effect of surcharge loads at the ground surface should be added to the computed lateral earth pressure. A surcharge load, q, will typically result in a lateral load equal to 0.5 q.

(iii) Bottom Stability. In braced cuts, if tight sheeting is terminated at the base of the cut, the bottom of the excavation can become unstable under certain conditions. This condition is governed by the shear strength of the soils and by the differential hydrostatic head between the groundwater level within the retained soils and the groundwater level at the interior of the trench excavation. For cuts in cohesive soils (sandy lean clay, silty clay, lean clay and fat clay), as predominantly encountered in all borings the stability of the bottom can be evaluated in accordance with the procedure outlined on Figure 4. For cut in cohesionless soils (such as sand fill, fine sand w/silt, clayey sand and silt w/sand) as encountered in borings B-4B, B-5B, B-9A

and B-11 between depths of 4 and 11 feet; 10 and 12 feet and 10 and 15 feet, dewatering will be required.

5.2. Excavation Dewatering

Excavations for the proposed valves installation and gridline extensions may encounter groundwater seepage to varying degrees depending upon the groundwater conditions at the time of construction and the location and depth of the excavation.

Based on the soil conditions identified in the borings and the proposed valves and piping installation, all the excavations will be in cohesive soils, except at locations of 3, 4 and 5 where sand fill, fine sand w/silt and silt w/sand were encountered between depths of 4 and 15 feet. In cohesive soil, groundwater may be managed by collection in excavation bottom sumps for pumped disposal. In cohesionless soils, dewatering such as well points will be required to lower the ground water level at least 5 feet below the proposed excavation depths. It is recommended that the actual groundwater conditions be verified at the time of construction and that the groundwater control be performed in general accordance with City of Houston standard specifications, section 01578, “Control of Ground Water and Surface Water.”

5.3 Bedding and Backfill

In general, the City of Houston Standard Specification 02521 “Gate Valves;” 02522 "Butterfly Valves", Section 02317 “Excavation and Backfill for Utilities,” and Section 02320 “Utility Backfill Material” and Section 02317-04 "Water Distribution Main for Open Cut" should be followed for bedding and backfill.

5.4 Lateral Earth Pressure Diagram

The structures for this project will consist of 72-inch manholes and structural support for permanent and temporary valves at locations 4 and 5. These structures will be installed at depths of 18 to 20 feet below grade.

The pressure diagram provided on Figures 3.1 through 3.4 can be used for the design of braced excavation. The lateral earth pressure diagram presented on Figures 5.1 and 5.2 are applicable for the design of the permanent walls of the structures.

5.5 Allowable Bearing Pressure and Hydrostatic Uplift Resistance

5.5.1 Allowable Bearing Pressure. Based on the soil conditions revealed by the borings B-4B and B-5B, the manholes and structural support at locations 4 and 5 will be formed in very soft clay and very stiff clays, respectively. The details of allowable bearing pressures are given below:

Location	Structure	Depth of Installation	Soil Boring Utilized	Allowable Net Bearing Pressure (psf)
4	Manhole	20	B-4B	1,500
5	Manhole	18	B-5B	6,000

The allowable bearing pressures include a factor of safety of 2.0. The recommendations of the allowable bearing pressure given above assume that the final bearing surface consists of undisturbed natural soils, underlying transmissive zones are properly pressure-relieved, and stable undisturbed bearing surfaces are attained.

Due to very soft clays encountered at the bottom of foundation 20 feet to depth of 23 feet at location 4, foundation improvements such as cement stabilized sand or crushed stone supported manholes will be required, to these depths where soft clays are encountered.

5.5.2 Hydrostatic Uplift Resistance. Structure extending below the groundwater level should be designed to resist uplift pressure resulting from excess piezometric head. Design uplift pressures should be computed based on the assumption that the water table is at ground surface. To resist the hydrostatic uplift at the bottom of the structure, one of the following sources of resistance can be utilized in each of the designs.

a. Dead weight of structure,
b. Weight of soil above base extensions plus weight of structure, or
c. Soil-wall friction plus dead weight of structure.

The uplift force and resistance to uplift should be computed as detailed on Figure 6. In determining the configuration and dimensions of the structure using one of the approaches presented on Figure 6, the following factors of safety are recommended.

a. Dead weight of concrete structure, $S_{f1} = 1.10$,
b. Weight of soil(backfill) above base extension, $S_{f2} = 1.5$, and
c. Soil-wall friction, $S_{f3} = 3.0$.

Friction resistance should be discounted for the upper 5 feet, since this zone is affected by seasonal moisture changes.

6.0 LIMITATIONS

The description of subsurface conditions and the design information contained in this report are based on the test borings made at the time of drilling at specific locations. However, some variation in soil conditions may occur between test boring. Should any subsurface conditions other than those described in our boring be encountered, Geotest should be immediately notified so that further investigation and supplemental recommendations can be provided.

The depth of the groundwater level may vary with changes in environmental conditions such as frequency and magnitude of rainfall. The stratification lines on the log of borings represent the approximate boundaries between soil types, however, the transition between soil types may be more gradual than depicted.

7.0 AUTHORIZATIONS AND CREDITS

Lockwood, Andrews & Newnam, Inc. (LAN) was selected by the City of Houston to provide engineering services in support of Surface Water Transmission Program (SWTP) for Condition Assessment of 96-inch Water Line along Clinton Drive from Wayside to IH-610 and referred to as WBS No. S-000901-0008-3. LAN then selected Geotest Engineering, Inc. (Geotest) to provide geotechnical engineering services related to the design and construction of the project.

This report has been prepared for the exclusive use of Lockwood, Andrews and Newnam, Inc. and the City of Houston for the design and construction of Condition Assessment of 96-inch Water Line along Clinton Drive.

This report shall not be reproduced without the written permission of Geotest Engineering, Inc., Lockwood, Andrews and Newnam, Inc. or the City of Houston.

8.0 REFERENCES

1. Surface water transmission program (SWTP) design manual.

ILLUSTRATIONS

	Figure
Vicinity Map	1
Plan of Borings	2.1 thru 2.3
Excavation Support Earth Pressure	3.1 thru 3.4
Stability of Bottom for Braced Cut	4
Lateral Earth Pressure Diagram for Permanent Wall	5.1 and 5.2
Uplift Pressure and Resistance	6

Job No. 1140195201

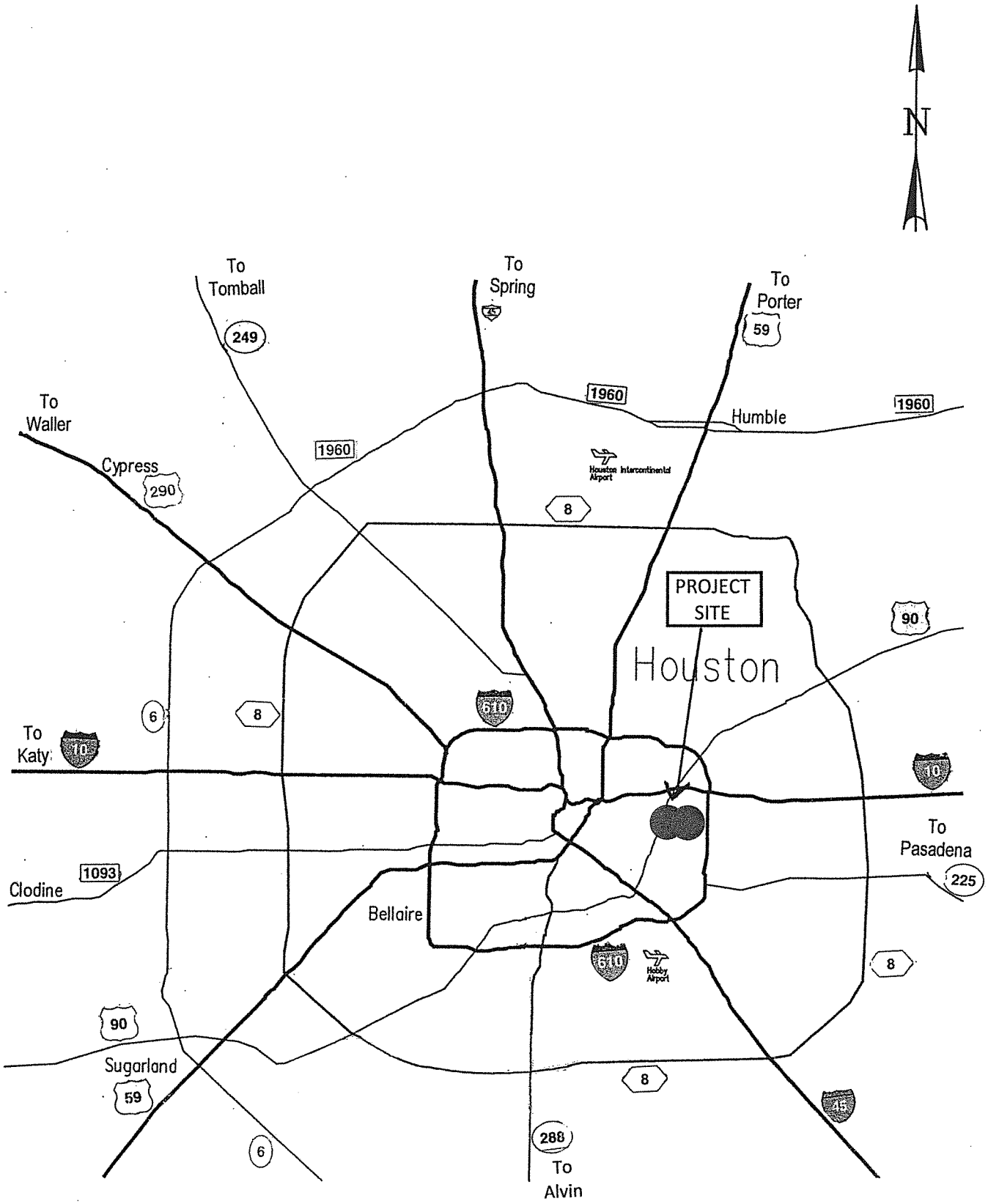

VICINITY MAP

(NOT TO SCALE)

Geotest Engineering, Inc.

FIGURE 1

Job No. : 1140195201

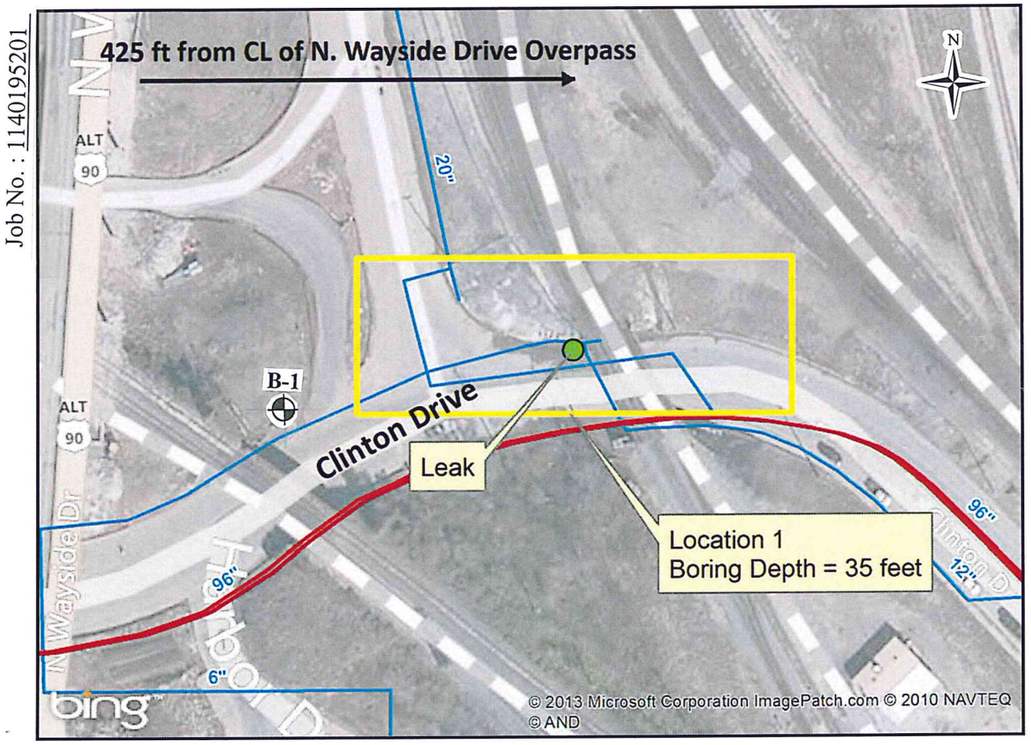

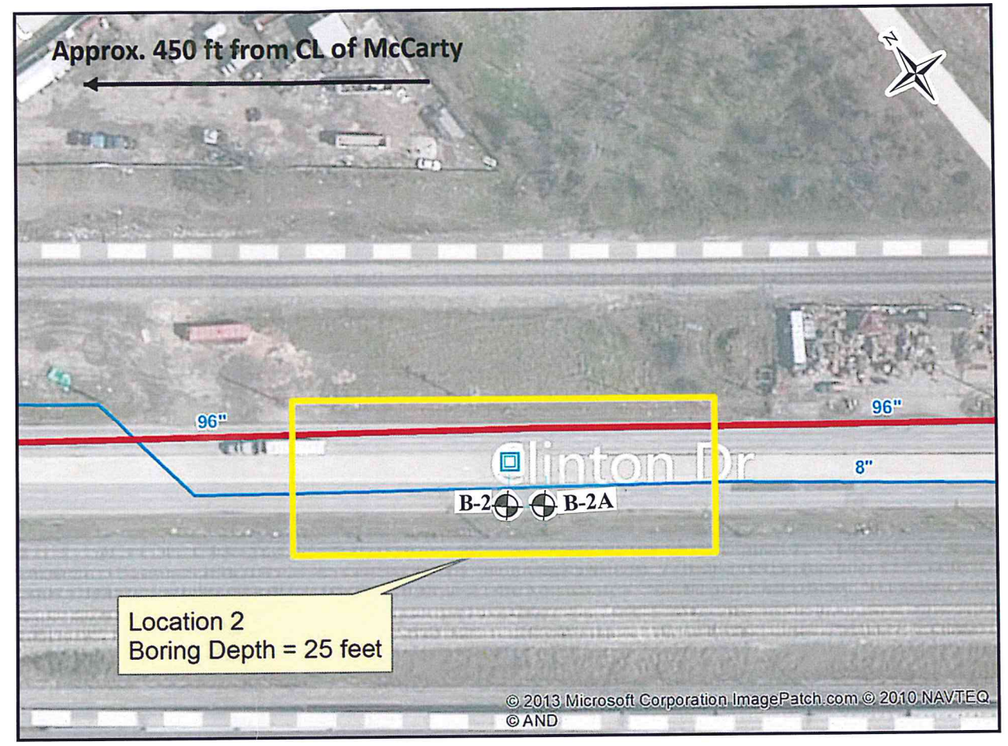

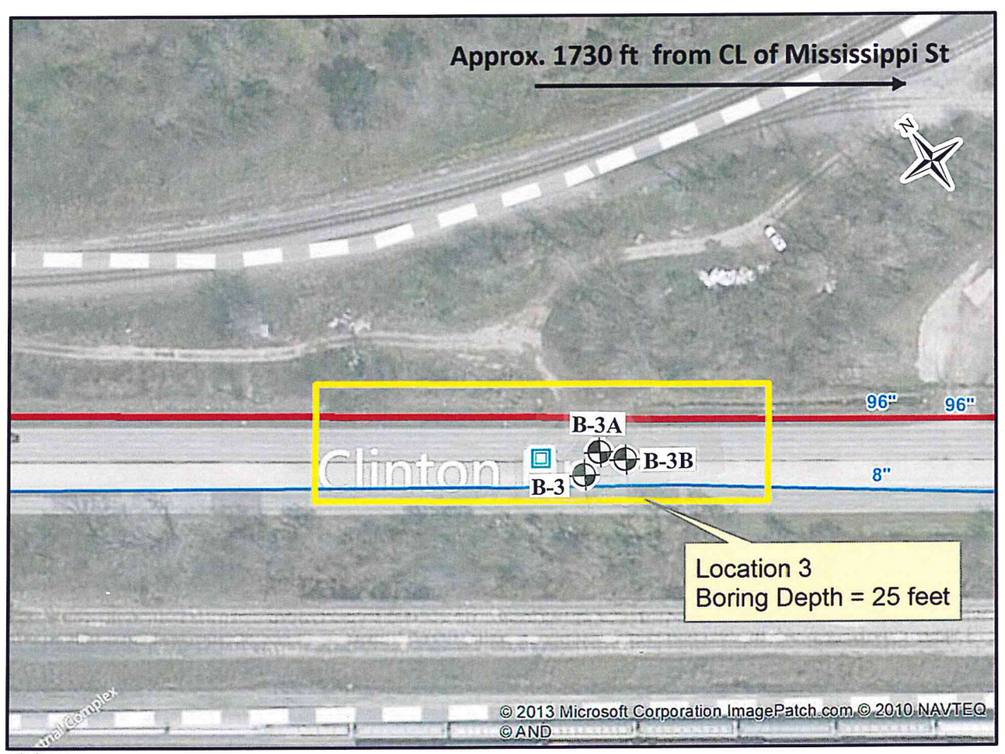

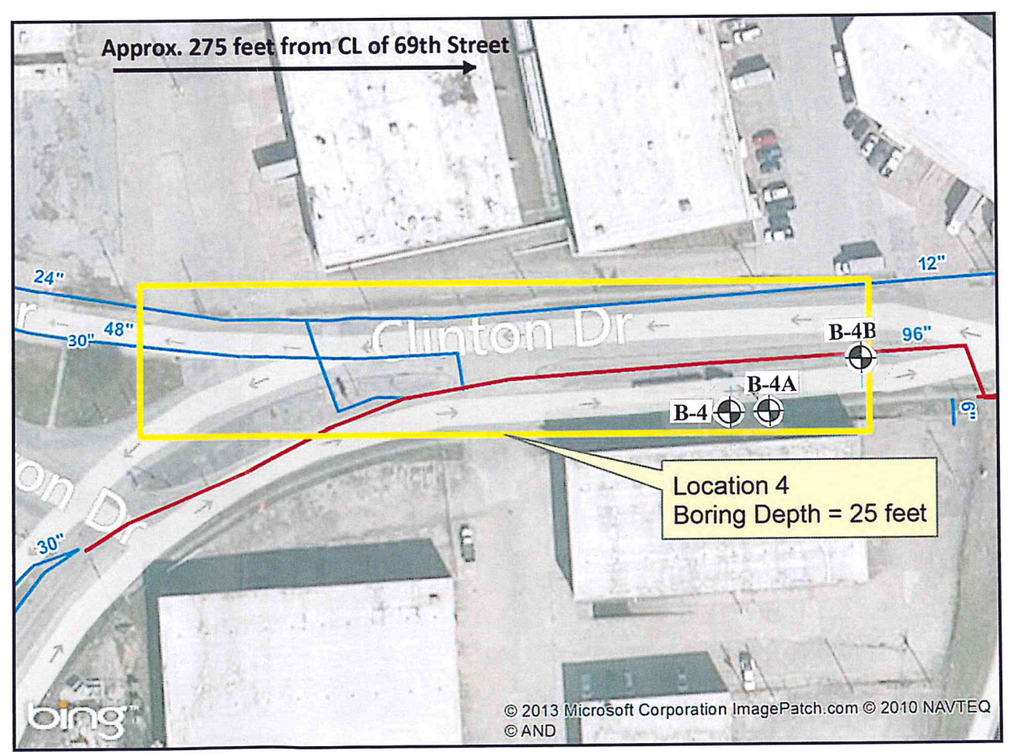

CITY OF HOUSTON

EXHIBIT 1
GEOTECH LOCATIONS

96" Water Line
along Clinton Drive
Condition Assessment

Legend

- Existing Water Lines
- 96" Water Line
- Boring

PLAN OF BORINGS

0 50 100 Feet

Lockwood, Andrews & Newnam, Inc.
A LEO A DALY COMPANY

FIGURE 2.1

6/3/2013
L:\130-10557-019\9-0-Non-Projectwise_Data\9-01-GIS\Exhibits\Exhibits for Subconsultants\Geotech Locations pg 1.mxd

Job No. : 1140195201

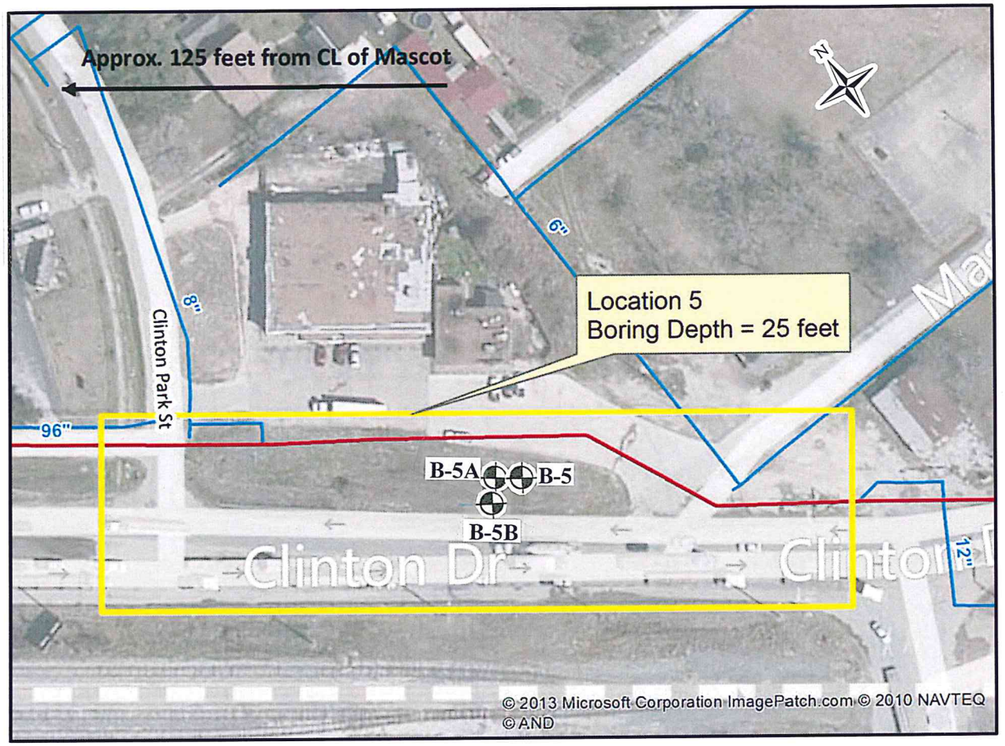

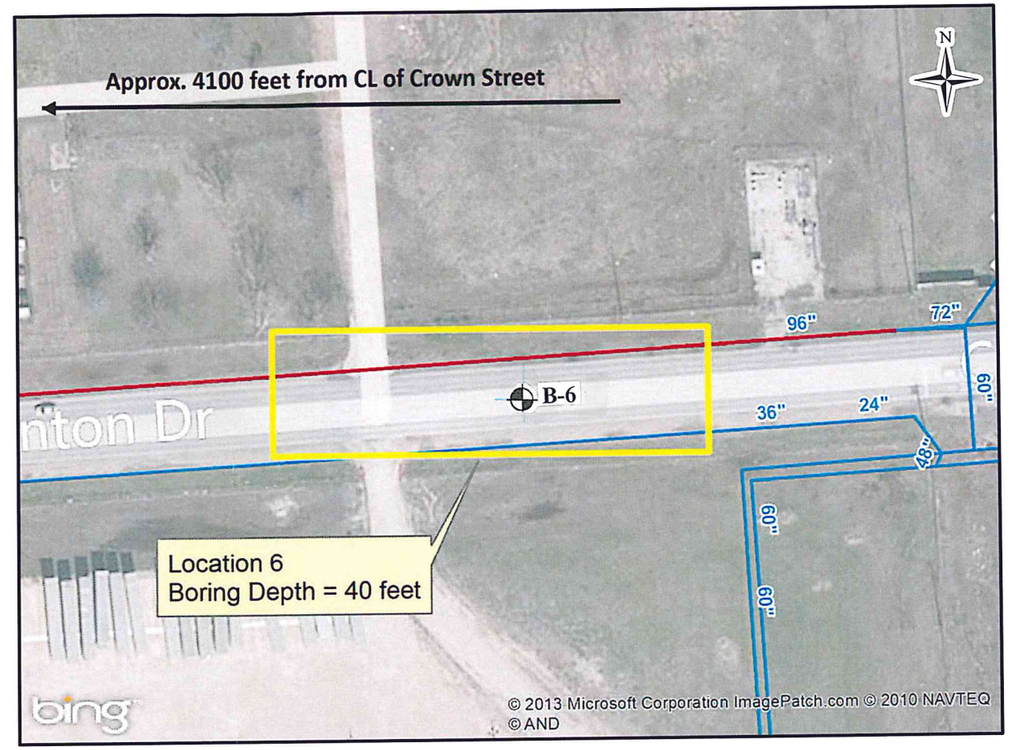

CITY OF HOUSTON

EXHIBIT 1
GEOTECH LOCATIONS

96" Water Line along Clinton Drive Condition Assessment

Legend

- Existing Waterlines
- 96" Waterline
- Boring

PLAN OF BORINGS

Lockwood, Andrews & Newnam, Inc.
A LEO A DALY COMPANY

FIGURE 2.2

6/3/2013
L:\130-10557-019\9-0-Non-Projectwise_Data\9-01-GIS\Exhibits\Exhibits for Subconsultants\Geotech Locations pg 2.mxd

Job No. : 1140193201

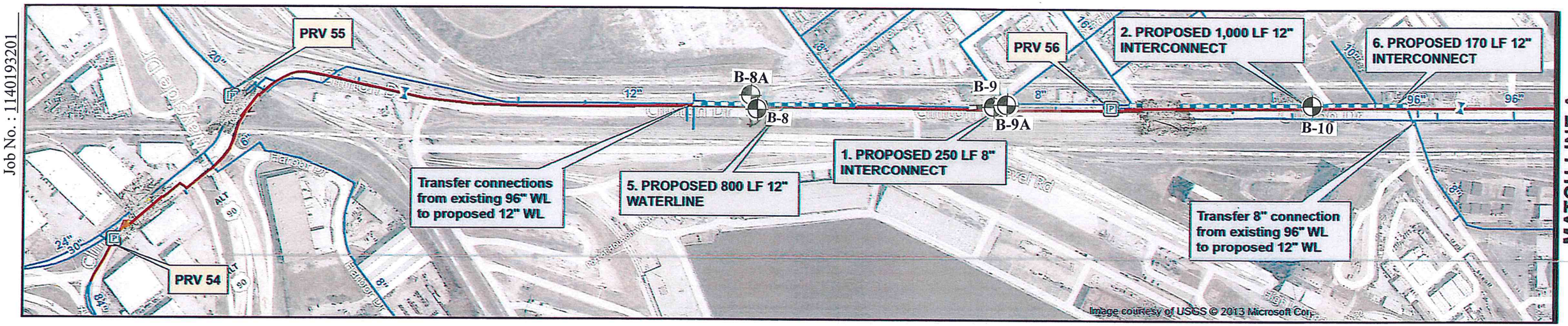

MATCH LINE A

MATCH LINE A

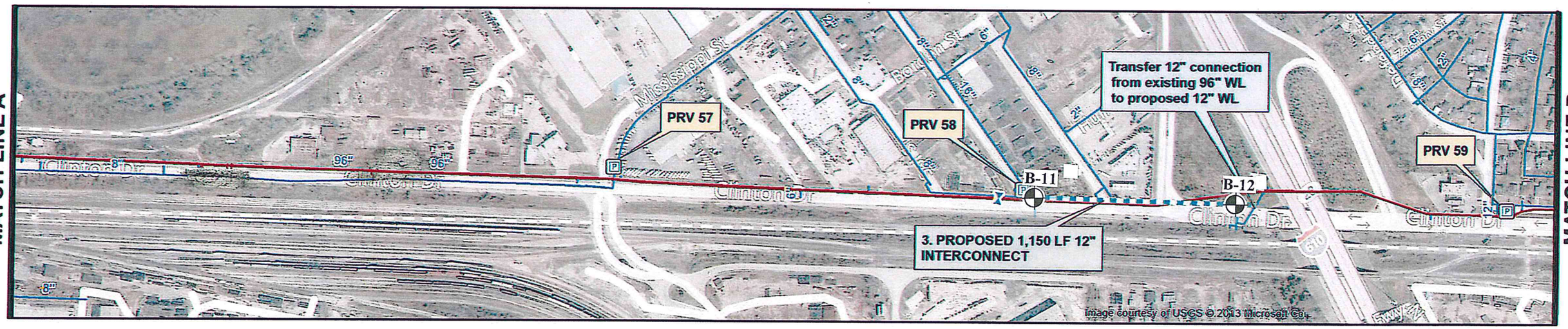

MATCH LINE B

MATCH LINE B

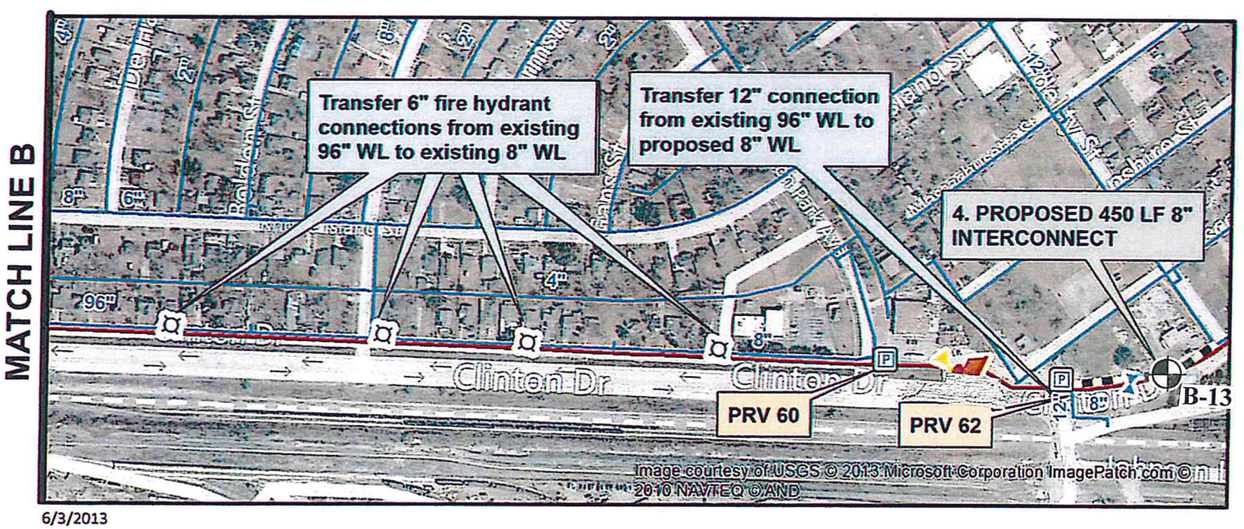

EXHIBIT 6
SCENARIO 2: OVERALL PROPOSED IMPROVEMENTS FOR SHUTDOWN FROM NORTH WAYSIDE DRIVE TO WEST OF FIDELITY STREET

Legend

- Existing Water Lines
- 96" Water Line
- 96" Isolation Valves
- PRVs
- Proposed 8" WL
- Proposed 12" WL
- Boring
- Proposed 96" Temp. Valve
- Proposed 96" Valve
- Fire Hydrants on 96" WL
- Improvement
- Transfer Connections

PLAN OF BORINGS

CITY OF HOUSTON

N E S W

0 500 1,000 Feet

Lockwood, Andrews & Newnam, Inc.
A LEO A DALY COMPANY

DRAFT
JUNE 2013

6/3/2013

L:\130-10557-019\9-0-Non-Projectwise_Data\9-01-GIS\Exhibits\Shutdown Tech Memo\REVISED Tech Memo (2013-05-23)\Exhibit 6 Proposed interconnects (+ fire flow) from NWS to FIDELITY.mxd

FIGURE 2.3

Job No. 140195201

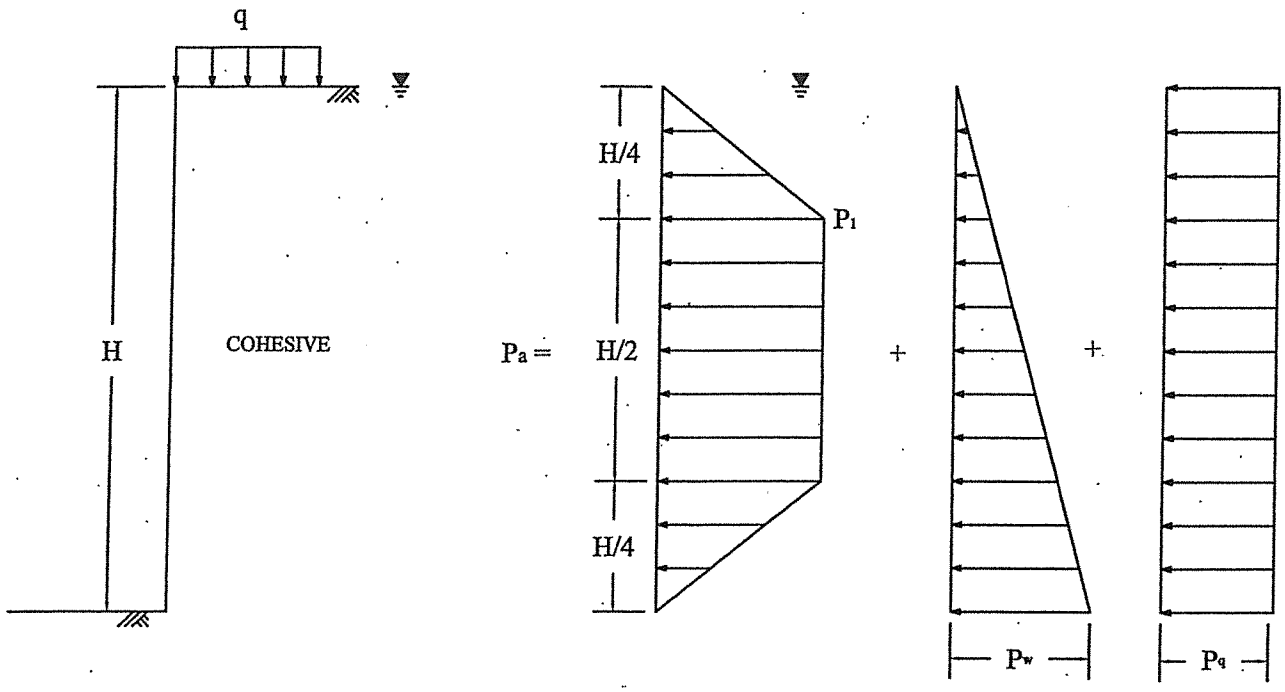

TYPICAL SOIL PARAMETERS

BRACED WALL

See Table 1 for typical values of soil parameters

For $\gamma H/c \leq 4$

$P_1 = 0.3\ \gamma_c' H$
$P_w = \gamma_w H = 62.4\ H$
$P_q = 0.5\ q$

Where:

γ_c' = Submerged unit weight of cohesive soil, pcf;
γ_w = Unit weight of water, pcf;
q = Surcharge load at surface, psf;
P_a = Lateral pressure, psf;
P_1 = Active earth pressure, psf;
P_q = Horizontal pressure due to surcharge, psf;
P_w = Hydrostatic pressure due to groundwater, psf;
H = Depth of braced excavation, feet
c = Shear strength of cohesion soil, psf;

EXCAVATION SUPPORT EARTH PRESSURE

SUBMERGED COHESIVE SOIL

Job No. 1140195201

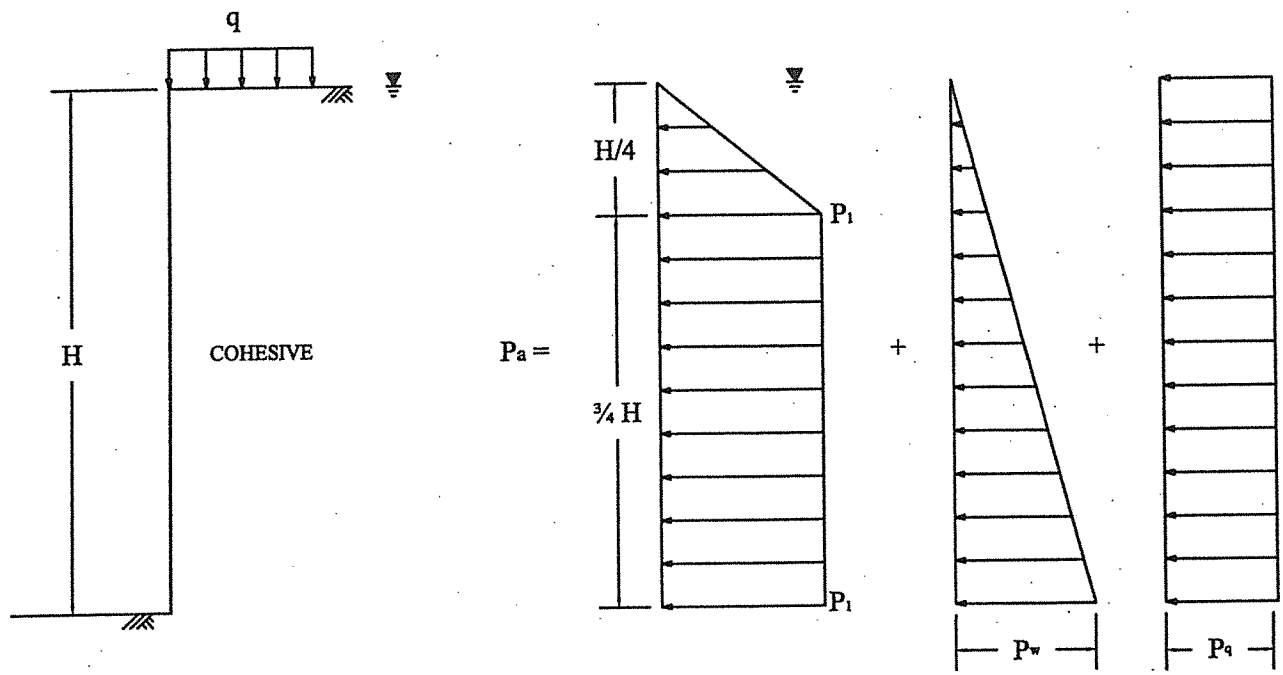

TYPICAL SOIL PARAMETERS

BRACED WALL

See Table 1 for typical values of soil parameters

For $\gamma H/c > 4$

$P_1 = \gamma_c' H [1-(4c/\gamma_c' H)]$ or $P_1 = 0.3\ \gamma_c' H$ (whichever is higher)

$P_w = \gamma_w H = 62.4\ H$

$P_q = 0.5\ q$

Where:

γ_c' = Submerged unit weight of cohesive soil, pcf;
γ_w = Unit weight of water, pcf;
q = Surcharge load at surface, psf;
P_a = Lateral pressure, psf;
P_1 = Active earth pressure, psf;
P_q = Horizontal pressure due to surcharge, psf;
P_w = Hydrostatic pressure due to groundwater, psf;
H = Depth of braced excavation, feet
c = Shear strength of cohesive soil, psf;

EXCAVATION SUPPORT EARTH PRESSURE

SUBMERGED SOFT TO MEDIUM STIFF COHESIVE SOIL

Job No. 1140195201

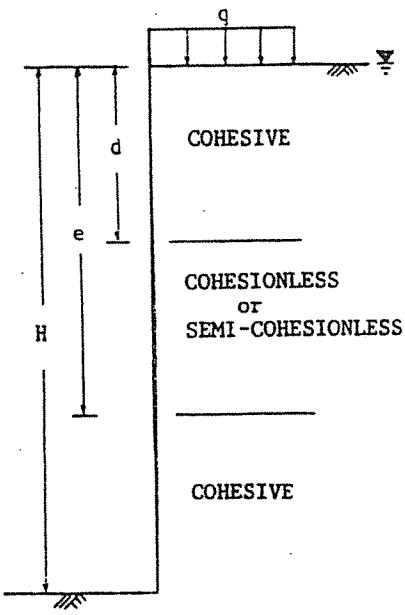

TYPICAL SOIL PARAMETERS

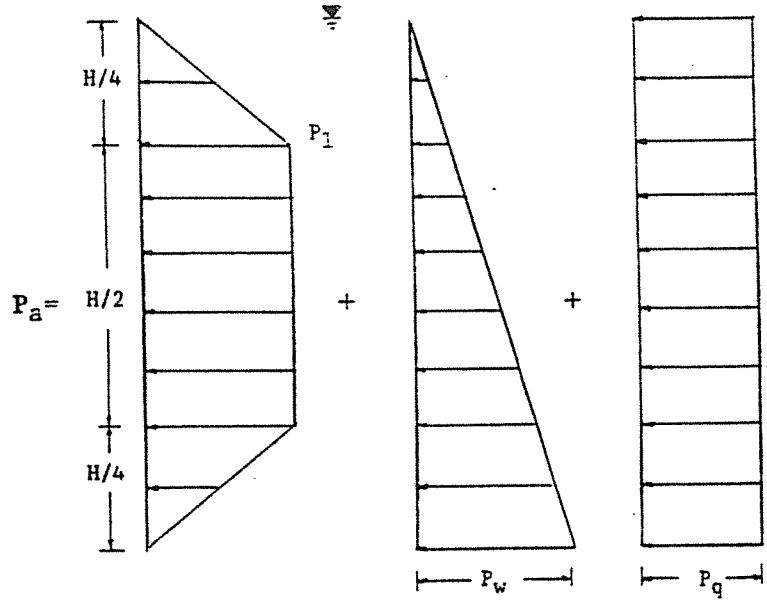

BRACED WALL

See Table 1 for typical values of soil parameters

$$P_1 = 0.3\ \gamma'_{avg}\ H$$

$$P_w = \gamma_w\ H = 62.4\ H$$

$$P_q = 0.5q$$

$$\gamma'_{avg} = \frac{\gamma_c'\ d + \gamma_s'\ (e-d) + \gamma_c'\ (H-e)}{H}$$

$$\gamma_w = 62.4 \text{ pcf}$$

Where:

- γ_c' = Submerged unit weight of cohesive soil, pcf ;
- γ_s' = Submerged unit weight of cohesionless or semi-cohesionless soil, pcf ;
- γ_w = Unit weight of water, pcf;
- γ'_{avg} = Average submerged unit weight of soil, pcf ;
- q = Surcharge load at surface, psf;
- P_a = Lateral pressure, psf;
- P_1 = Active earth pressure, psf;
- P_q = Horizontal pressure due to surcharge, psf;
- P_w = Hydrostatic pressure due to groundwater, psf;
- H = Depth of braced excavation, feet

EXCAVATION SUPPORT EARTH PRESSURE

SUBMERGED COHESIVE SOIL
INTERBEDDED WITH COHESIONLESS OR
SEMI-COHESIONLESS SOIL

Job No. 1140195201

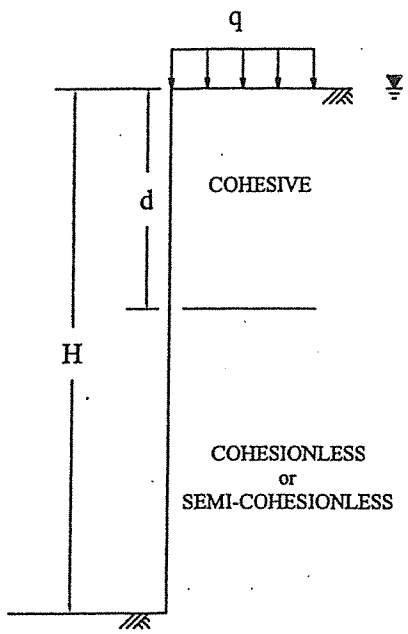

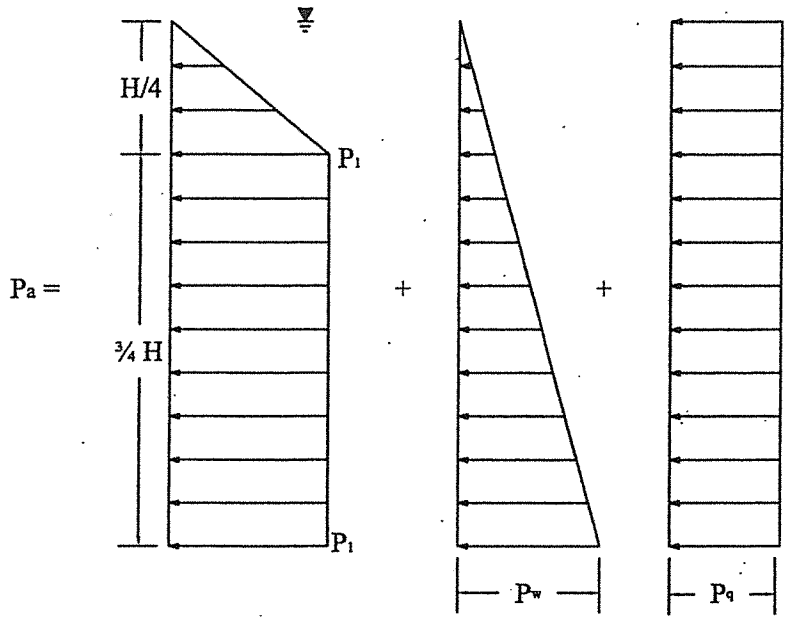

TYPICAL SOIL PARAMETERS

BRACED WALL

See Table 1 for typical values of soil parameters

$$\gamma'_{avg} = \frac{\gamma_c' \, d + \gamma_s' \, (H-d)}{H}$$

$P_1 = 0.3 \, \gamma'_{avg} \, H$
$P_w = 62.4 \, H$
$P_q = 0.5 \, q$

Where:

γ_c' = Submerged unit weight of cohesive soil, pcf;
γ_s' = Submerged unit weight of cohesionless soil, pcf;
γ'_{avg} = Average submerged unit weight of soils, pcf;
q = Surcharge load at surface, psf;
P_a = Lateral pressure, psf;
P_1 = Active earth pressure, psf;
P_q = Horizontal pressure due to surcharge, psf;
P_w = Hydrostatic pressure due to groundwater, psf;
H = Depth of braced excavation, feet

EXCAVATION SUPPORT EARTH PRESSURE

SUBMERGED COHESIVE SOIL OVER
COHESIONLESS OR SEMI-COHESIONLESS SOIL

Job No. 1140195201

CUT IN COHESIVE SOIL,
DEPTH OF COHESIVE SOIL UNLIMITED ($T > 0.7\ B_d$)
L = LENGTH OF CUT

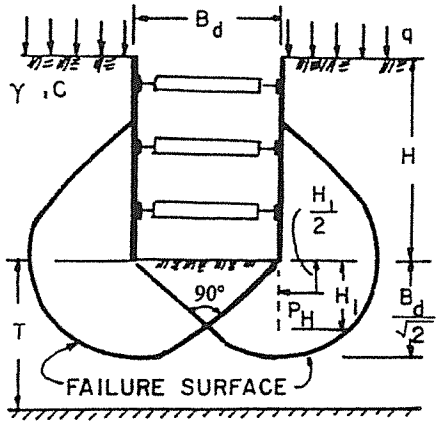

If sheeting terminates at base of cut:

$$\text{Safety factor, } F_S = \frac{N_C C}{\gamma H + q}$$

N_C = Bearing capacity factor, which depends on dimensions of the excavation : B_d , L and H (use N_C from graph below)

C = Undrained shear strength of clay in failure zone beneath and surrounding base of cut

γ = Wet unit weight of soil (see Table 1)

q = Surface surcharge (assume q = 500 psf)

If safety factor is less than 1.5, sheeting or soldier piles must be carried below the base of cut to insure stability - (see note)

$$H_1 = \text{Buried length} = \frac{B_d}{2} \geq 5 \text{ feet}$$

Note : If soldier piles are used, the center to center spacing should not exceed 3 times the width or diameter of soldier pile .

Force on buried length, P_H:

$$\text{If } H_1 > \frac{2}{3}\frac{B_d}{\sqrt{2}}, \quad P_H = 0.7\,(\gamma\, HB_d - 1.4CH - \pi CB_d) \text{ in lbs/ linear foot}$$

$$\text{If } H_1 < \frac{2}{3}\frac{B_d}{\sqrt{2}}, \quad P_H = 1.5H_1\left(\gamma\, H - \frac{1.4CH}{B_d} - \pi C\right) \text{ in lbs/ linear foot}$$

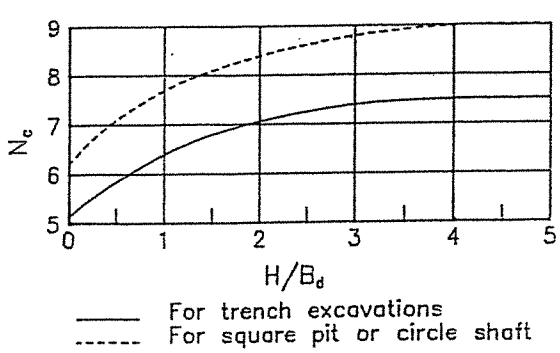

STABILITY OF BOTTOM
FOR
BRACED CUT

Job No. 1140195201

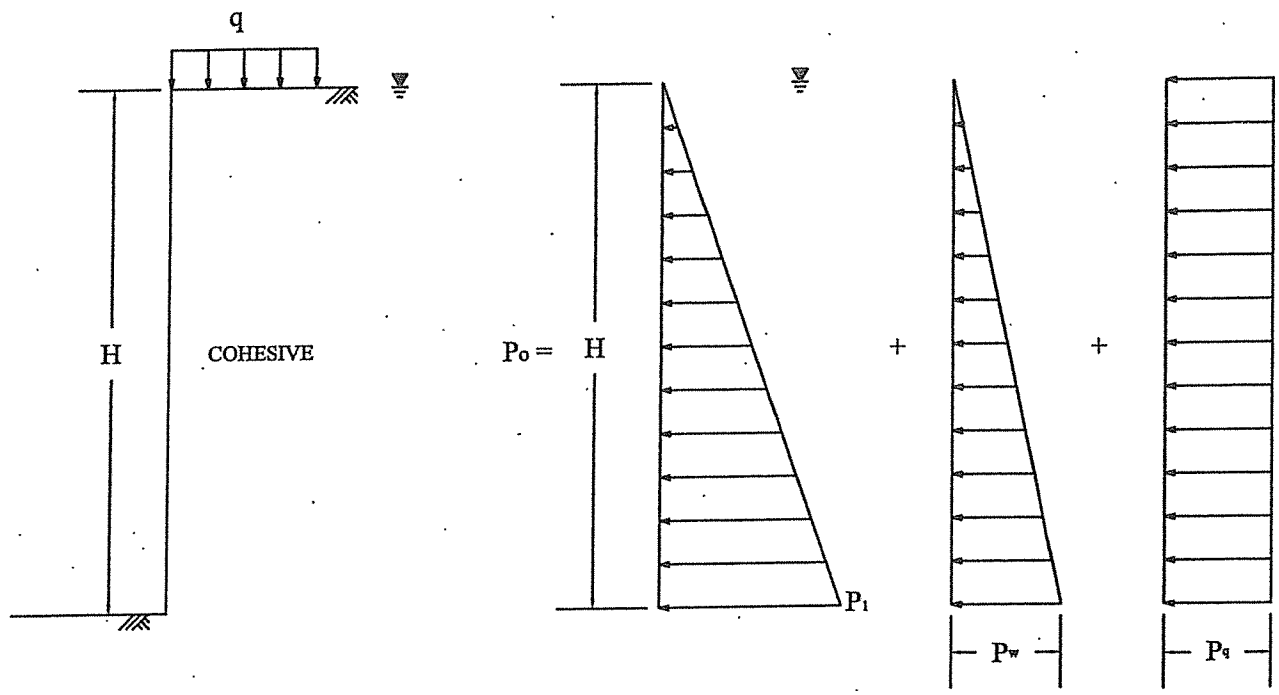

TYPICAL SOIL PARAMETERS

PERMANENT WALL

See Table 1 for typical values of soil parameters

$K_{oc} = 1.0$

$P_1 = K_{oc}\,\gamma_c'\,H$
$P_w = \gamma_w\,H = 62.4\,H$
$P_q = 0.5\,q$

Where:

γ_c' = Submerged unit weight of cohesive soil, pcf;
K_{oc} = Coefficient of at-rest earth pressure in cohesive soil;
γ_w = Unit weight of water, pcf;
q = Surcharge load at surface, psf;
P_o = Lateral pressure, psf;
P_1 = At-rest earth pressure, psf;
P_q = Horizontal pressure due to surcharge, psf;
P_w = Hydrostatic pressure due to groundwater, psf;
H = Depth of excavation, feet

LATERAL EARTH PRESSURE DIAGRAM FOR PERMANENT WALL

SUBMERGED COHESIVE SOIL

Job No. 1140195201

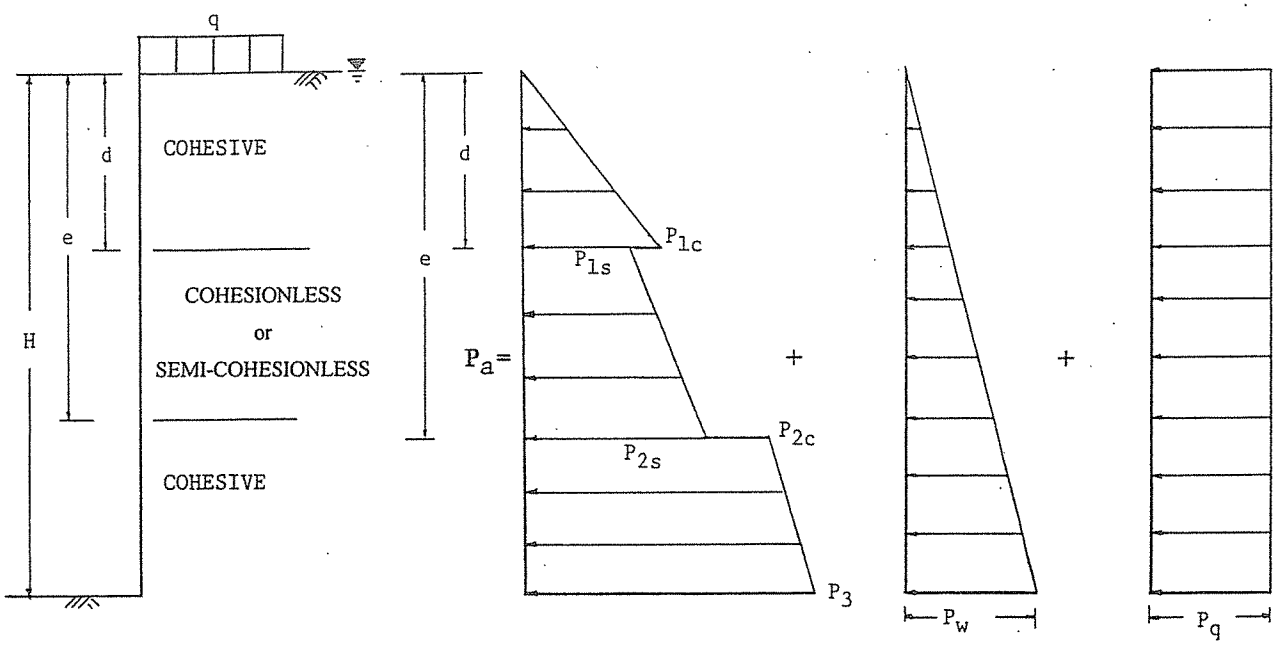

TYPICAL SOIL PARAMETERS

See Table 1 for typical values of soil parameters

$K_{oc} = 1.0$

$K_{os} = 1 - \sin\phi_s$

$\gamma_w = 62.4$ psf

PERMANENT WALL

$P_{1c} = \gamma'_c\, d\, K_{oc}$

$P_{1s} = \gamma'_c\, d\, K_{os}$

$P_{2s} = P_{1s} + \gamma'_s\, (e\text{-}d)\, K_{os}$

$P_{2c} = [\gamma'_c\, d + \gamma'_s\, (e\text{-}d)]\, K_{oc}$

$P_3 = [\gamma'_c\, d + \gamma'_s\, (e\text{-}d) + \gamma'_c\, (H\text{-}e)\,]\, K_{oc}$

$P_w = \gamma_w\, H = 62.4\, H$

$P_q = 0.5\, q$

Where:

γ_c' = Effective unit weight of cohesive soil, pcf;
γ_s' = Effective unit weight of cohesionless or semi-cohesionless soil, pcf;
ϕ_s = Internal friction angle of cohesionless or semi-cohesionless soil, degree;
K_{oc} = Coefficient of earth pressure at rest in cohesive soils;
Ko_{as} = Coefficient of earth pressure at rest in cohesionless or semi-cohesionless soil;
γ_w = Unit weight of water, pcf;
q = Surcharge load at surface, psf;
P_a = Lateral pressure, psf;
P_i, P_{ic}, P_{is} = Earth pressure at rest, psf; i = 1, 2, 3;
P_q = Horizontal pressure due to surcharge, psf;
P_w = Hydrostatic pressure due to groundwater, psf;
H = Height of wall, feet

LATERAL EARTH PRESSURE DIAGRAM FOR PERMANENT WALL

SUBMERGED COHESIVE SOIL INTERBEDDED WITH COHESIONLESS OR SEMI-COHESIONLESS SOIL

Job No. 1140195201

(a) DEAD WEIGHT OF STRUCTURE

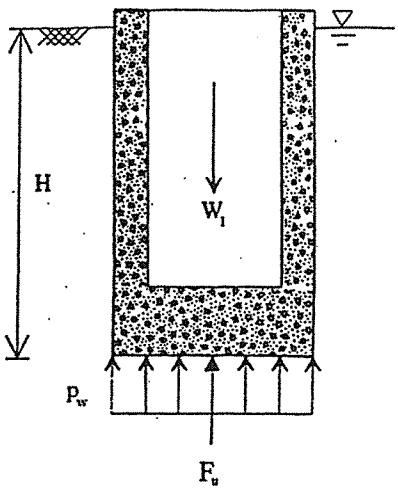

$$p_w = H\gamma_w$$

$$F_u = A_b p_w$$

$$\frac{W_1}{Sf_1} = F_u$$

(b) WEIGHT OF SOIL ABOVE BASE EXTENSION PLUS DEAD WEIGHT OF STRUCTURE

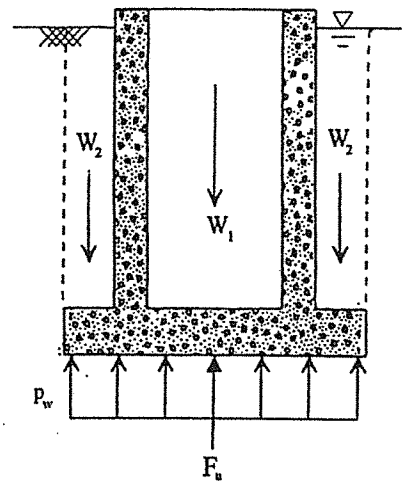

$$p_w = H\gamma_w$$

$$F_u = A_b p_w$$

$$\frac{W_1}{Sf_1} + \frac{W_2}{Sf_2} = F_u$$

(c) SOIL-WALL FRICTION PLUS DEAD WEIGHT OF STRUCTURE

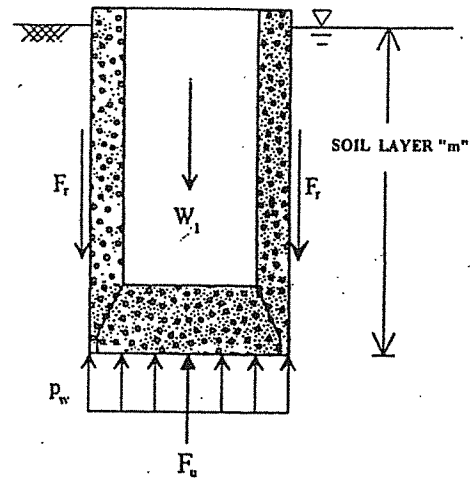

$$p_w = H\gamma_w$$

$$F_u = A_b p_w$$

$$\frac{W_1}{Sf_1} + \frac{F_r}{Sf_3} = F_u$$

Predominantly Cohesive Soils, $F_r = \alpha\, c_m A_m$

Predominantly Cohesionless Soils, $F_r = p_m A_m K \tan \delta_m$

See Table 1 for typical values of soil parameters

Where:

A_b	=	area of base, sq. ft.
A_m	=	cylindrical surface area of layer "m", sq. ft.
c_m	=	undrained cohesion of soil layer "m", psf.
F_u	=	hydrostatic uplift force, lbs.
F_r	=	frictional resistance, lbs.
H	=	height of buried structure, ft.
K	=	coefficient of lateral pressure = 0.5.
p_m	=	average overburden pressure for layer "m," psf.
p_w	=	hydrostatic uplift pressure, psf.
$Sf_{1,2,3}$	=	factor of safety.
W_1	=	dead weight of concrete structure, lbs.
W_2	=	weight of backfill above base extension, lbs.
α	=	cohesion reduction factor = 0.5.
δ_m	=	friction angle between soil layer "m" and concrete wall, degrees = 0.75 ϕ_m
ϕ_m	=	internal angle of friction of soil layer "m", degrees.
γ_w	=	unit weight of water = 62.4 pcf.

UPLIFT PRESSURE AND RESISTANCE

TABLES

	Table
Summary of Boring Information	1
Geotechnical Design Parameter Summary Open-Cut Excavation	2

TABLE 1

SUMMARY OF BORING INFORMATION

Boring No.	Depth (feet)	Northing	Easting	Elevation (feet)
B-1	35	13841432.55	3144061.22	19.60
B-2A	25	13838799.27	3147920.48	33.50
B-3B	25	13837459.00	3149828.00	34.60
B-4B	25	13841321.52	3143615.34	36.20
B-5B	25	13833082.90	3156080.89	24.80
B-6	40	--	--	--
B-8A	15	13840109.76	3146068.45	35.80
B-9A	15	13839456.16	3147035.29	35.15
B-10	15	13839109.04	3147525.10	34.50
B-11	15	13835541.20	3152566.13	27.90
B-12	15	13835112.95	3153138.96	28.20
B-13	15	13832819.70	3156477.60	30.30

Note: The survey information (approximate coordinates) is provided by LAN, Inc.

TABLE 2

GEOTECHNICAL DESIGN PARAMETER SUMMARY
OPEN-CUT EXCAVATION

Location	Boring Nos.	Stratigraphic Unit	Range of Depths, ft	Wet Unit Weight, γ, pcf	Submerged Unit Weight, γ', pcf	Undrained Cohesion, psf	Internal Friction Angle, φ, degree
1	B-1	Cohesive Fill	0-2	120	60	2000	--
		Cohesive	2-6	130	65	400	--
			6-16	130	70	2000	--
			16-33	130	70	3000	--
			33-35	130	70	2000	--
2	B-2A	Cohesive	13"-4	120	60	1000	--
			4-8	120	60	2000	--
			8-12	120	60	2800	--
			12-14	120	60	1500	--
			14-18	130	65	1500	--
			18-23	130	65	4000	--
			23-25	130	65	1000	--
3	B-3B	Cohesive Fill	0-6	120	60	1000	--
		Cohesive	6-12	121	61	1200	--
			12-18	132	70	1500	--
			18-25	132	70	3000	--
4	B-4B	Cohesive Fill	0-4	120	60	700	--
		Cohesionless Fill	4-8	110	55	--	25
		Cohesive Fill	8-10	120	60	500	--
		Cohesionless Fill	10-14	110	55	--	25
		Cohesive Fill	14-18	120	58	200	--
		Cohesive	18-23	104	42	200	--
			23-25	104	42	4000	--
5	B-5B	Cohesive Fill	0-6	124	62	1500	--
		Cohesive	6-10	124	62	1800	--
		Cohesionless	10-12	108	46	--	25
		Cohesive	12-23	126	64	2600	--
			23-25	126	64	1000	--
6	B-6	Cohesive Fill	0-4	120	60	1600	--
		Cohesive	4-8	132	70	1600	--
			8-10	135	72	3600	--
			10-12	135	72	500	--
			12-23	125	63	2800	--
			23-28	125	63	3500	--
			28-33	135	73	4000	--
			33-38	135	73	3500	--
			38-40	135	73	4000	--

TABLE 2 (cont'd)

GEOTECHNICAL DESIGN PARAMETER SUMMARY
OPEN-CUT EXCAVATION

Location	Boring Nos.	Stratigraphic Unit	Range of Depths, ft	Wet Unit Weight, γ, pcf	Submerged Unit Weight, γ', pcf	Undrained Cohesion, psf	Internal Friction Angle, φ, degree
2 and 3	B-8A	Cohesive Fill	0-4	120	60	500	--
		Cohesive	4-12	127	63	1,000	--
			12-15	127	63	3,500	--
	B-9A	Cohesive	0-4	128	64	1,500	--
			4-10	130	65	2,000	--
		Cohesionless	10-15	112	56	--	30
3 and 4	B-10	Cohesive Fill	0-15	129	65	1,000	--
5 and 6	B-11	Cohesive Fill	0-6	120	60	200	--
		Cohesionless Fill	6-11	110	48	--	25
		Cohesive	11-15	130	68	800	--
	B-12 and B-13	Cohesive	0-14	127	64	1,500	--
			14-15	128	64	1,200	--

Notes:
1. Cohesive fill includes fat clay and sandy lean clay.
   Cohesionless fill includes sand and clayey sand.
2. Cohesive soils include fat clay, sandy lean clay, silty clay and lean clay.
3. Cohesionless soils include fine sand w/silt and silt w/sand.

APPENDIX A

	Figure
Log of Borings	A-1 thru A-12
Symbols and Terms Used on Boring Logs	A-13

LOG OF BORING NO. B-1

PROJECT : Surface Water Transmission Program – 96" Clinton Drive Condition Assessment; WBS No. S-000901-0008-3 Houston, Texas

PROJECT NO. : 1140195201

LOCATION : See Plan of Borings (Figure 2.1)

COMPLETION DEPTH : 35.0 FT.

SURFACE ELEVATION : Existing Grade

DATE : 06-28-13

SAMPLER : Shelby Tube/Split Spoon

DRY AUGER : 0.0 TO 8.0 FT.

WET ROTARY : 8.0 TO 35.0 FT.

UNDRAINED SHEAR STRENGTH, TSF
○ HAND PENETROMETER
● UNCONFINED COMPRESSION
■ UNCONSOLIDATED-UNDRAINED TRIAXIAL COMPRESSION
△ TORVANE

ELEVATION, FEET	DEPTH, FEET	DESCRIPTION OF MATERIAL	STANDARD PENETRATION TEST, BLOWS PER FOOT	PERCENT PASSING NO. 200 SIEVE	DRY UNIT WEIGHT, PCF	NATURAL MOISTURE CONTENT, %	LIQUID LIMIT, %	PLASTIC LIMIT, %	PLASTICITY INDEX, %
	0	FILL: hard brown and gray sandy lean clay w/grass roots and gravel				13			
		Medium stiff to stiff gray SILTY CLAY (CL-ML) w/sand seams,				17			
	5	-soft to stiff gray and yellow 4'-6'		71	118	18	21	14	7
		Stiff to very stiff gray and yellow SANDY LEAN CLAY (CL) w/f				17			
		-w/calcareous nodules 6'-8'							
	10	-very stiff 8'-12'				17			
		-w/clay seams 11'-12'				22			
		Very stiff yellowish brown and gray FAT CLAY (CH)							
		-w/sand seams 12'-16'				23			
	15	-w/ferrous nodules and ferrous stains 12'-19'		87	111	19	58	23	35
		-slickensided 14'-16'							
		-hard 16'-18'							
		-w/calcareous nodules 16'-19'				19			
		-reddish brown and gray slickensided 18'-30'				26			
	20								
		-very stiff to hard 23'-30'							
	25					21			
		-w/ferrous stains 28'-30'							
	30					17			
		-w/calcareous nodules and clay stone 31'-33'							
		Very stiff to hard reddish brown SANDY LEAN CLAY (CL) w/sand seams							
	35					21			

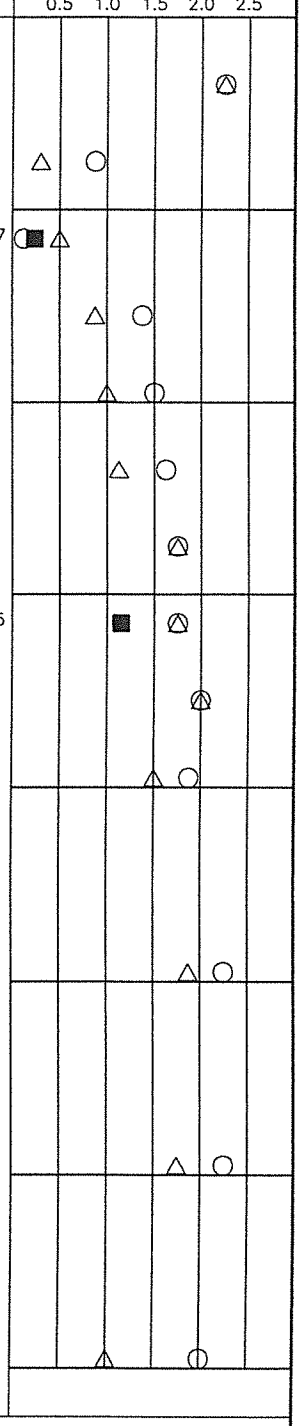

DEPTH TO WATER IN BORING :
▽: FREE WATER 1st ENCOUNTERED AT 7.0 FT. DURING DRILLING; AFTER 15.0 MIN. AT 5.0 FT.
HOLE OPEN TO 35.0 FT. AT END OF DRILLING.

Geotest Engineering, Inc.

FIGURE A-1

LOG OF BORING NO. B-2A

PROJECT : Surface Water Transmission Program – 96" Clinton Drive Condition Assessment; WBS No. S-000901-0008-3 Houston, Texas

PROJECT NO. : 1140195201

LOCATION : See Plan of Borings (Figure 2.1)

COMPLETION DEPTH : 25.0 FT.

SURFACE ELEVATION : Existing Grade

DATE : 06-27-13

SAMPLER : Shelby Tube/Split Spoon

DRY AUGER : 0.0 TO 25.0 FT.

WET ROTARY : -- TO -- FT.

ELEVATION, FEET	DEPTH, FEET	SYMBOL	SAMPLES	DESCRIPTION OF MATERIAL	STANDARD PENETRATION TEST, BLOWS PER FOOT	PERCENT PASSING NO. 200 SIEVE	DRY UNIT WEIGHT, PCF	NATURAL MOISTURE CONTENT, %	LIQUID LIMIT, %	PLASTIC LIMIT, %	PLASTICITY INDEX, %
	0			5.5" Asphalt over 8" Asphaltic Concrete							
				Medium stiff to stiff gray FAT CLAY (CH)				27			
				–stiff to very stiff 2'–6'				19			
				–w/ferrous nodules and ferrous stains 3'–12'							
	5			–very stiff w/calcareous nodules 6'–12'		90	97	24	62	25	37
								25			
	10			–brown and gray 10'–11'				21			
				–reddish brown 11'–12'				30			
				Stiff to very stiff gray and brown LEAN CLAY (CL) w/calcareous nodules and sand seams		96		19	38	18	20
	15			Very stiff to hard reddish brown FAT CLAY (CH), slickensided				25			
				–w/calcareous nodules 14'–16'		100	107	21	64	25	39
				–w/ferrous stains 14'–18'							
	20			–hard 18'–20'				22			
				–w/sand on bottom at 20'							
				Medium stiff to stiff gray SANDY LEAN CLAY (CL) w/sand seams and HYDROCARBON ODOR				17			
	25			–very stiff 23'–25'				15			
	30			NOTE : In Boring B-2, obstruction was encountered beneath pavement and offset to boring B-2A.							
	35										

UNDRAINED SHEAR STRENGTH, TSF

○ HAND PENETROMETER

● UNCONFINED COMPRESSION

■ UNCONSOLIDATED-UNDRAINED TRIAXIAL COMPRESSION

△ TORVANE

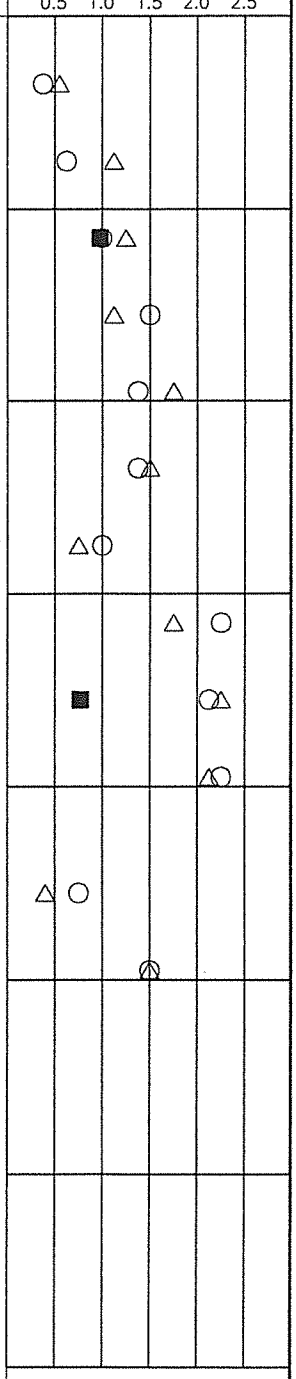

DEPTH TO WATER IN BORING :
NO GROUNDWATER ENCOUNTERED DURING DRILLING.
HOLE OPEN TO 25.0 FT. AT END OF DRILLING.

Geotest Engineering, Inc.

FIGURE A-2A

LOG OF BORING NO. B-3

PROJECT : Surface Water Transmission Program – 96" Clinton Drive Condition Assessment; WBS No. S-000901-0008-3 Houston, Texas

PROJECT NO. : 1140195201

LOCATION : See Plan of Borings (Figure 2.1)

COMPLETION DEPTH : 6.0 FT.

SURFACE ELEVATION : Existing Grade

DATE : 06-27-13

SAMPLER : Shelby Tube/Split Spoon

DRY AUGER : 0.0 TO 6.0 FT.

WET ROTARY : -- TO -- FT.

ELEVATION, FEET	DEPTH, FEET	SYMBOL	SAMPLES	DESCRIPTION OF MATERIAL	STANDARD PENETRATION TEST, BLOWS PER FOOT	PERCENT PASSING NO. 200 SIEVE	DRY UNIT WEIGHT, PCF	NATURAL MOISTURE CONTENT, %	LIQUID LIMIT, %	PLASTIC LIMIT, %	PLASTICITY INDEX, %	UNDRAINED SHEAR STRENGTH, TSF (○ HAND PENETROMETER; ● UNCONFINED COMPRESSION; ■ UNCONSOLIDATED-UNDRAINED TRIAXIAL COMPRESSION; △ TORVANE) 0.5 1.0 1.5 2.0 2.5
	0			FILL: limestone gravel and clay mix –stiff gray and brown sandy clay w/sand seams, shell and shel –medium stiff 4'–5'								
	5											
	10			NOTE : Hit hard obstruction at 6' and offset to boring B-3A. Obstruction was encountered beneath pavement and offset to boring B-3B.								
	15											
	20											
	25											
	30											
	35											

DEPTH TO WATER IN BORING :
NO GROUNDWATER ENCOUNTERED DURING DRILLING.
HOLE OPEN TO 6.0 FT. AT END OF DRILLING.

Geotest Engineering, Inc.

FIGURE A-3

LOG OF BORING NO. B-3B

PROJECT : Surface Water Transmission Program – 96" Clinton Drive Condition Assessment; WBS No. S-000901-0008-3 Houston, Texas

PROJECT NO. : 1140195201

LOCATION : See Plan of Borings (Figure 2.1)

COMPLETION DEPTH : 25.0 FT.

SURFACE ELEVATION : Existing Grade

DATE : 06-27-13

SAMPLER : Shelby Tube/Split Spoon

DRY AUGER : 0.0 TO 21.0 FT.

WET ROTARY : 21.0 TO 25.0 FT.

ELEVATION, FEET	DEPTH, FEET	SYMBOL	SAMPLES	DESCRIPTION OF MATERIAL	STANDARD PENETRATION TEST, BLOWS PER FOOT	PERCENT PASSING NO. 200 SIEVE	DRY UNIT WEIGHT, PCF	NATURAL MOISTURE CONTENT, %	LIQUID LIMIT, %	PLASTIC LIMIT, %	PLASTICITY INDEX, %
	0			8" Asphalt and 6.5" Asphaltic Concrete							
				FILL: dark brown sandy lean clay w/gravel and sand seams –stiff to very stiff 2'–4' –medium stiff to stiff 4'–6'				21 19 23			
	5										
				Stiff gray FAT CLAY (CH) –w/roots 6'–8' –very stiff w/ferrous nodules and ferrous stains 8'–12'		88	95	27	61	22	39
	10							23 21			
				Stiff to very stiff gray and brown LEAN CLAY (CL) w/calcareous and ferrous nodules, ferrous stains and sand and silt seams –very stiff reddish brown and gray w/calcareous nodules 16'–18'		88	110	16 20 20 18	38	20	18
	15										
	20			Very stiff to hard reddish brown FAT CLAY (CH), slickensided w/calcareous nodules and ferrous stains –w/sand seams 21'–23'		85	111	19	50	21	29
	25			Very stiff to hard gray and yellow SANDY LEAN CLAY (CL)				15			
	30										
	35										

UNDRAINED SHEAR STRENGTH, TSF

○ HAND PENETROMETER

● UNCONFINED COMPRESSION

■ UNCONSOLIDATED–UNDRAINED TRIAXIAL COMPRESSION

△ TORVANE

0.5 1.0 1.5 2.0 2.5

DEPTH TO WATER IN BORING :
▽: FREE WATER 1st ENCOUNTERED AT 21.0 FT. DURING DRILLING; AFTER 10.0 MIN. AT 18.7 FT.
HOLE OPEN TO 25.0 FT. AT END OF DRILLING.

Geotest Engineering, Inc.

FIGURE A-3B

LOG OF BORING NO. B-4

PROJECT : Surface Water Transmission Program – 96" Clinton Drive Condition Assessment; WBS No. S-000901-0008-3 Houston, Texas

PROJECT NO. : 1140195201

LOCATION : See Plan of Borings (Figure 2.1)

COMPLETION DEPTH : 10.0 FT.

SURFACE ELEVATION : Existing Grade

DATE : 06-28-13

SAMPLER : Shelby Tube/Split Spoon

DRY AUGER : 0.0 TO 10.0 FT.

WET ROTARY : -- TO -- FT.

UNDRAINED SHEAR STRENGTH, TSF: ○ HAND PENETROMETER ● UNCONFINED COMPRESSION ■ UNCONSOLIDATED-UNDRAINED TRIAXIAL COMPRESSION △ TORVANE

ELEVATION, FEET	DEPTH, FEET	SYMBOL	SAMPLES	DESCRIPTION OF MATERIAL	STANDARD PENETRATION TEST, BLOWS PER FOOT	PERCENT PASSING NO. 200 SIEVE	DRY UNIT WEIGHT, PCF	NATURAL MOISTURE CONTENT, %	LIQUID LIMIT, %	PLASTIC LIMIT, %	PLASTICITY INDEX, %	UNDRAINED SHEAR STRENGTH, TSF (0.5 1.0 1.5 2.0 2.5)
	0			FILL: hard dark gray and brown sandy lean clay –w/grass roots and concrete 0'–2' –w/sand seams 0'–8' –very stiff 2'–4' –w/shell fragments 4'–5' –stiff 4'–8' –w/wood at 6' –gray w/shell fragments 6'–8' –brown and gray sand 8'–10'								
	5											
	10				9							
	15			NOTE : Hit hard obstruction at 10' and offset to boring B-4A.								
	20											
	25											
	30											
	35											

DEPTH TO WATER IN BORING :
NO GROUNDWATER ENCOUNTERED DURING DRILLING.
HOLE OPEN TO 10.0 FT. AT END OF DRILLING.

Geotest Engineering, Inc.

LOG OF BORING NO. B-4A

PROJECT : Surface Water Transmission Program – 96" Clinton Drive Condition Assessment; WBS No. S-000901-0008-3 Houston, Texas

PROJECT NO. : 1140195201

LOCATION : See Plan of Borings (Figure 2.1)

COMPLETION DEPTH : 10.0 FT.

SURFACE ELEVATION : Existing Grade

DATE : 06-28-13

SAMPLER : Shelby Tube/Split Spoon

DRY AUGER : 0.0 TO 10.0 FT.

WET ROTARY : -- TO -- FT.

ELEVATION, FEET	DEPTH, FEET	SYMBOL	SAMPLES	DESCRIPTION OF MATERIAL	STANDARD PENETRATION TEST, BLOWS PER FOOT	PERCENT PASSING NO. 200 SIEVE	DRY UNIT WEIGHT, PCF	NATURAL MOISTURE CONTENT, %	LIQUID LIMIT, %	PLASTIC LIMIT, %	PLASTICITY INDEX, %	UNDRAINED SHEAR STRENGTH, TSF (○ HAND PENETROMETER; ● UNCONFINED COMPRESSION; ■ UNCONSOLIDATED-UNDRAINED TRIAXIAL COMPRESSION; △ TORVANE) 0.5 1.0 1.5 2.0 2.5
	0			FILL: gray sandy lean clay -w/grass roots 0'-2' -w/shell fragments 0'-7.75' -very stiff gray and brown 2'-4'								
	5			-gray 6'-7.75 -stiff 6'-8' -brown and gray silty sand 7.75'-10'								
	10			NOTE : Hit hard obstruction at 10' and offset to boring B-4B.								
	15											
	20											
	25											
	30											
	35											

DEPTH TO WATER IN BORING :
NO GROUNDWATER ENCOUNTERED DURING DRILLING.
HOLE OPEN TO 10.0 FT. AT END OF DRILLING.

Geotest Engineering, Inc.

FIGURE A-4A

LOG OF BORING NO. B-4B

PROJECT : Surface Water Transmission Program – 96" Clinton Drive Condition Assessment; WBS No. S-000901-0008-3 Houston, Texas

PROJECT NO. : 1140195201

LOCATION : See Plan of Borings (Figure 2.1)

COMPLETION DEPTH : 25.0 FT.

SURFACE ELEVATION : Existing Grade

DATE : 08-08-13

SAMPLER : Shelby Tube/Split Spoon

DRY AUGER : 0.0 TO 25.0 FT.

WET ROTARY : -- TO -- FT.

ELEVATION, FEET	DEPTH, FEET	SYMBOL	SAMPLES	DESCRIPTION OF MATERIAL	STANDARD PENETRATION TEST, BLOWS PER FOOT	PERCENT PASSING NO. 200 SIEVE	DRY UNIT WEIGHT, PCF	NATURAL MOISTURE CONTENT, %	LIQUID LIMIT, %	PLASTIC LIMIT, %	PLASTICITY INDEX, %
	0			9" Concrete							
				FILL: medium stiff gray sandy lean clay				20			
				–w/HYDROCARBON ODOR and sand seams 2'–4'				19			
	5			–very loose brown and gray sand 4'–7'8"							
				–w/sand seams 6'–8'	4			9			
				–soft dark gray sandy lean clay 7'8"–10'	3			14			
	10			–very loose brown sand 10'–11'	5	65		23			
				–gray and brown clayey sand 12'–14'	4			18			
				–very soft brown and gray very sandy clay w/sand seams 14'–18'				21			
	15					57		23	24	14	10
								27			
				Very soft reddish brown FAT CLAY (CH), slickensided		100	68	53	68	26	42
	20										
				–hard reddish brown and gray 23'–25'							
	25							24			
	30										
	35										

UNDRAINED SHEAR STRENGTH, TSF

○ HAND PENETROMETER

● UNCONFINED COMPRESSION

■ UNCONSOLIDATED–UNDRAINED TRIAXIAL COMPRESSION

△ TORVANE

0.5 1.0 1.5 2.0 2.5

DEPTH TO WATER IN BORING :
▽: FREE WATER ENCOUNTERED AT 17.0 FT. DURING DRILLING.
HOLE OPEN TO 10.0 FT. AT END OF DRILLING.

Geotest Engineering, Inc.

FIGURE A-4B

LOG OF BORING NO. B-5

PROJECT : Surface Water Transmission Program – 96" Clinton Drive Condition Assessment; WBS No. S-000901-0008-3 Houston, Texas

PROJECT NO. : 1140195201

LOCATION : See Plan of Borings (Figure 2.2)

COMPLETION DEPTH : 2.0 FT.

SURFACE ELEVATION : Existing Grade

DATE : 06-28-13

SAMPLER : Shelby Tube/Split Spoon

DRY AUGER : 0.0 TO 2.0 FT.

WET ROTARY : -- TO -- FT.

ELEVATION, FEET	DEPTH, FEET	SYMBOL	SAMPLES	DESCRIPTION OF MATERIAL	STANDARD PENETRATION TEST, BLOWS PER FOOT	PERCENT PASSING NO. 200 SIEVE	DRY UNIT WEIGHT, PCF	NATURAL MOISTURE CONTENT, %	LIQUID LIMIT, %	PLASTIC LIMIT, %	PLASTICITY INDEX, %	UNDRAINED SHEAR STRENGTH, TSF (○ HAND PENETROMETER; ● UNCONFINED COMPRESSION; ■ UNCONSOLIDATED-UNDRAINED TRIAXIAL COMPRESSION; △ TORVANE) 0.5 1.0 1.5 2.0 2.5
	0			FILL: dark gray fat clay w/roots and shell fragments								
				NOTE : Hit hard obstruction at 2' and offset to B-5A.								
	5											
	10											
	15											
	20											
	25											
	30											
	35											

DEPTH TO WATER IN BORING :
NO GROUNDWATER ENCOUNTERED DURING DRILLING.
HOLE OPEN TO 2.0 FT. AT END OF DRILLING.

Geotest Engineering, Inc.

FIGURE A-5

LOG OF BORING NO. B-5A

PROJECT : Surface Water Transmission Program – 96" Clinton Drive Condition Assessment; WBS No. S-000901-0008-3 Houston, Texas

PROJECT NO. : 1140195201

LOCATION : See Plan of Borings (Figure 2.2)

COMPLETION DEPTH : 2.0 FT.

SURFACE ELEVATION : Existing Grade

DATE : 06-28-13

SAMPLER : Shelby Tube/Split Spoon

DRY AUGER : 0.0 TO 2.0 FT.

WET ROTARY : -- TO -- FT.

ELEVATION, FEET	DEPTH, FEET	SYMBOL	SAMPLES	DESCRIPTION OF MATERIAL	STANDARD PENETRATION TEST, BLOWS PER FOOT	PERCENT PASSING NO. 200 SIEVE	DRY UNIT WEIGHT, PCF	NATURAL MOISTURE CONTENT, %	LIQUID LIMIT, %	PLASTIC LIMIT, %	PLASTICITY INDEX, %	UNDRAINED SHEAR STRENGTH, TSF (○ HAND PENETROMETER ● UNCONFINED COMPRESSION ■ UNCONSOLIDATED-UNDRAINED TRIAXIAL COMPRESSION △ TORVANE) 0.5 1.0 1.5 2.0 2.5
	0			FILL: dark gray clay w/roots and shell fragments								
				NOTE : Hit hard obstruction at 2' and offset to boring B-5B.								
	5											
	10											
	15											
	20											
	25											
	30											
	35											

DEPTH TO WATER IN BORING :
NO GROUNDWATER ENCOUNTERED DURING DRILLING.
HOLE OPEN TO 2.0 FT. AT END OF DRILLING.

Geotest Engineering, Inc.

FIGURE A-5A

LOG OF BORING NO. B-5B

PROJECT : Surface Water Transmission Program – 96" Clinton Drive Condition Assessment; WBS No. S-000901-0008-3 Houston, Texas

PROJECT NO. : 1140195201

LOCATION : See Plan of Borings (Figure 2.2)

COMPLETION DEPTH : 25.0 FT.

SURFACE ELEVATION : Existing Grade

DATE : 06-28-13

SAMPLER : Shelby Tube/Split Spoon

DRY AUGER : 0.0 TO 12.0 FT.

WET ROTARY : 12.0 TO 25.0 FT.

UNDRAINED SHEAR STRENGTH, TSF: ○ HAND PENETROMETER; ● UNCONFINED COMPRESSION; ■ UNCONSOLIDATED-UNDRAINED TRIAXIAL COMPRESSION; △ TORVANE (0.5, 1.0, 1.5, 2.0, 2.5)

ELEVATION, FEET	DEPTH, FEET	DESCRIPTION OF MATERIAL	STANDARD PENETRATION TEST, BLOWS PER FOOT	PERCENT PASSING NO. 200 SIEVE	DRY UNIT WEIGHT, PCF	NATURAL MOISTURE CONTENT, %	LIQUID LIMIT, %	PLASTIC LIMIT, %	PLASTICITY INDEX, %
	0	FILL: dark gray fat clay –w/grass roots and shell fragments 0'–4'				22			
		–stiff to very stiff dark gray and gray lean clay w/sand, gravel and shell fragments 4'–6'				23			
	5			83	102	22	49	21	28
		Very stiff reddish brown and gray LEAN CLAY (CL) w/ferrous stains –stiff to very stiff 8'–10'				20			
	10			88		20	34	19	15
		Loose brown SILT (ML) w/sand	9	76		20			
		Very stiff gray and yellow FAT CLAY (CH) w/calcareous and fe –slickensided 14'–16' –brown and gray 14'–19' –hard 16'–18'				22			
	15			89	103	22	68	26	42
		–very stiff to hard reddish brown and gray 19'–23'				21			
	20					21			
		Stiff to very stiff brown and gray SANDY LEAN CLAY (CL) w/sand seams				24			
	25								
	30								
	35								

DEPTH TO WATER IN BORING :
▽: FREE WATER 1st ENCOUNTERED AT 12.0 FT. DURING DRILLING; AFTER 15.0 MIN. AT 8.1 FT.
HOLE OPEN TO 25.0 FT. AT END OF DRILLING.

Geotest Engineering, Inc.

FIGURE A-5B

LOG OF BORING NO. B-6

PROJECT : Surface Water Transmission Program – 96" Clinton Drive Condition Assessment; WBS No. S-000901-0008-3 Houston, Texas

PROJECT NO. : 1140195201

LOCATION : See Plan of Borings (Figure 2.2)

COMPLETION DEPTH : 40.0 FT.

SURFACE ELEVATION : Existing Grade

DATE : 06-27-13

SAMPLER : Shelby Tube/Split Spoon

DRY AUGER : 0.0 TO 12.0 FT.

WET ROTARY : 12.0 TO 40.0 FT.

ELEVATION, FEET	DEPTH, FEET	SYMBOL	SAMPLES	DESCRIPTION OF MATERIAL	STANDARD PENETRATION TEST, BLOWS PER FOOT	PERCENT PASSING NO. 200 SIEVE	DRY UNIT WEIGHT, PCF	NATURAL MOISTURE CONTENT, %	LIQUID LIMIT, %	PLASTIC LIMIT, %	PLASTICITY INDEX, %
	0			FILL: dark gray fat clay w/gravel and shell fragments –stiff to very stiff 2'–4'				15			
								22			
	5			Stiff to very stiff gray FAT CLAY (CH) w/ferrous stains		90	109	22	57	21	36
				Stiff to very stiff gray and brown LEAN CLAY (CL) w/sand seams –very stiff to hard 8'–10'				19			
	10			–w/calcareous nodules 8'–11' –medium stiff to stiff 10'–12'		94	123	15	39	18	21
								21			
				Very stiff reddish brown FAT CLAY (CH) w/silt seams and ferrous stains				28			
	15			–slickensided 16'–20'				25			
				–very stiff to hard 18'–23'		100	99	26	74	27	47
	20							27			
								27			
	25			Very stiff to hard gray and yellow LEAN CLAY (CL) w/sand and clay seams and ferrous stains				16			
	30			Hard yellowish brown and gray FAT CLAY (CH) w/ferrous stains –w/sand seams 28'–30' –reddish brown and gray slickensided 32'–40' –very stiff 33'–35'		83	122	17	57	23	34
	35							17			

UNDRAINED SHEAR STRENGTH, TSF

○ HAND PENETROMETER

● UNCONFINED COMPRESSION

■ UNCONSOLIDATED-UNDRAINED TRIAXIAL COMPRESSION

△ TORVANE

0.5 1.0 1.5 2.0 2.5

DEPTH TO WATER IN BORING :
▽: FREE WATER 1st ENCOUNTERED AT 12.0 FT. DURING DRILLING; AFTER 15.0 MIN. AT 6.2 FT.
HOLE OPEN TO 40.0 FT. AT END OF DRILLING.

Continued on Figure A-6a

Geotest Engineering, Inc.

LOG OF BORING NO. B-6 Cont'd

PROJECT : Surface Water Transmission Program – 96" Clinton Drive Condition Assessment; WBS No. S-000901-0008-3 Houston, Texas

PROJECT NO. : 1140195201

LOCATION : See Plan of Borings (Figure 2.2)

COMPLETION DEPTH : 40.0 FT.

SURFACE ELEVATION : Existing Grade

DATE : 06-27-13

SAMPLER : Shelby Tube/Split Spoon

DRY AUGER : 0.0 TO 12.0 FT.

WET ROTARY : 12.0 TO 40.0 FT.

ELEVATION, FEET	DEPTH, FEET	SYMBOL	SAMPLES	DESCRIPTION OF MATERIAL	STANDARD PENETRATION TEST, BLOWS PER FOOT	PERCENT PASSING NO. 200 SIEVE	DRY UNIT WEIGHT, PCF	NATURAL MOISTURE CONTENT, %	LIQUID LIMIT, %	PLASTIC LIMIT, %	PLASTICITY INDEX, %	UNDRAINED SHEAR STRENGTH, TSF (○ HAND PENETROMETER; ● UNCONFINED COMPRESSION; ■ UNCONSOLIDATED-UNDRAINED TRIAXIAL COMPRESSION; △ TORVANE) 0.5 1.0 1.5 2.0 2.5
	35			Hard yellowish brown and gray FAT CLAY (CH) w/ferrous stains –w/calcareous nodules 36'–40'								
	40							18				
	45											
	50											
	55											
	60											
	65											
	70											

DEPTH TO WATER IN BORING :
▽: FREE WATER 1st ENCOUNTERED AT 12.0 FT. DURING DRILLING; AFTER 15.0 MIN. AT 6.2 FT.
HOLE OPEN TO 40.0 FT. AT END OF DRILLING.

Geotest Engineering, Inc.

FIGURE A-6a

LOG OF BORING NO. B-8

PROJECT : Surface Water Transmission Program – 96" Clinton Drive Condition Assessment; WBS No. S-000901-0008-3 Houston, Texas

PROJECT NO. : 1140195201

LOCATION : See Plan of Borings (Figure 2.3)

COMPLETION DEPTH : 7.0 FT.

SURFACE ELEVATION : Existing Grade

DATE : 11-21-13

SAMPLER : Shelby Tube/Split Spoon

DRY AUGER : 0.0 TO 7.0 FT.

WET ROTARY : -- TO -- FT.

ELEVATION, FEET	DEPTH, FEET	SYMBOL	SAMPLES	DESCRIPTION OF MATERIAL	STANDARD PENETRATION TEST, BLOWS PER FOOT	PERCENT PASSING NO. 200 SIEVE	DRY UNIT WEIGHT, PCF	NATURAL MOISTURE CONTENT, %	LIQUID LIMIT, %	PLASTIC LIMIT, %	PLASTICITY INDEX, %	UNDRAINED SHEAR STRENGTH, TSF (○ HAND PENETROMETER; ● UNCONFINED COMPRESSION; ■ UNCONSOLIDATED-UNDRAINED TRIAXIAL COMPRESSION; △ TORVANE) 0.5 1.0 1.5 2.0 2.5
	0			4.5" Asphalt								
				9" Concrete over 6.5" Cement Stabilized Sand								
				FILL: medium stiff gray, brown, dark gray sandy lean clay w/shell and sand seams								
	5											
				NOTE : Hit obstruction at 7 feet and offset to boring B-8A.								
	10											
	15											
	20											
	25											
	30											
	35											

DEPTH TO WATER IN BORING :
NO GROUNDWATER ENCOUNTERED DURING DRILLING.
HOLE OPEN TO 7.0 FT. AT END OF DRILLING.

Geotest Engineering, Inc.

FIGURE A-7

LOG OF BORING NO. B-8A

PROJECT : Surface Water Transmission Program – 96" Clinton Drive Condition Assessment; WBS No. S-000901-0008-3 Houston, Texas

PROJECT NO. : 1140195201

LOCATION : See Plan of Borings (Figure 2.3)

COMPLETION DEPTH : 15.0 FT.

SURFACE ELEVATION : Existing Grade

DATE : 11-21-13

SAMPLER : Shelby Tube/Split Spoon

DRY AUGER : 0.0 TO 15.0 FT.

WET ROTARY : -- TO -- FT.

ELEVATION, FEET	DEPTH, FEET	SYMBOL	SAMPLES	DESCRIPTION OF MATERIAL	STANDARD PENETRATION TEST, BLOWS PER FOOT	PERCENT PASSING NO. 200 SIEVE	DRY UNIT WEIGHT, PCF	NATURAL MOISTURE CONTENT, %	LIQUID LIMIT, %	PLASTIC LIMIT, %	PLASTICITY INDEX, %
	0			FILL: stiff to very stiff dark gray fat clay w/calcareous and ferrous nodules and sand seams				20			
								19			
				–medium stiff to stiff 2'–4'		79		24	62	24	38
	5			Medium stiff to stiff gray and brown FAT CLAY (CH) w/sand, calcareous nodules and ferrous stains		87	99	27	61	24	37
				–stiff 6'–8'							
				–very stiff 8'–10'				27			
	10			–stiff to very stiff 10'–12'				24			
				–hard 12'–14'		90	104	23	65	25	40
				–very stiff to hard 14'–15'				21			
	15							22			
	20										
	25										
	30										
	35										

UNDRAINED SHEAR STRENGTH, TSF

○ HAND PENETROMETER

● UNCONFINED COMPRESSION

■ UNCONSOLIDATED-UNDRAINED TRIAXIAL COMPRESSION

△ TORVANE

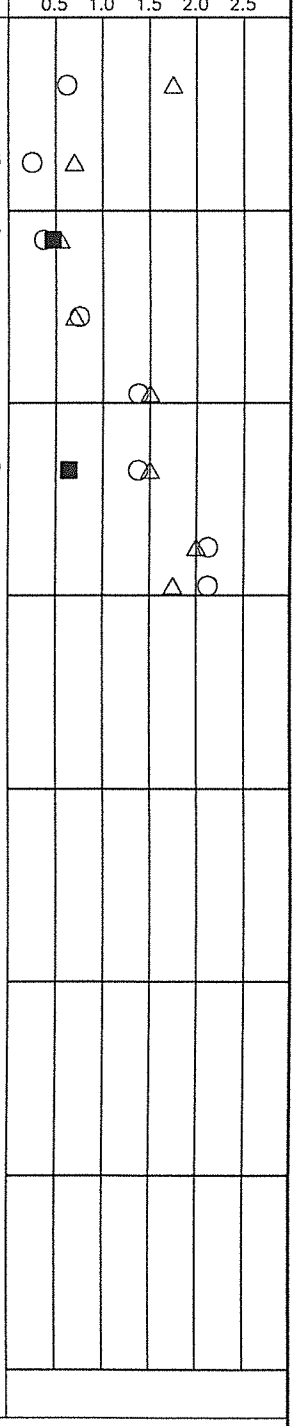

DEPTH TO WATER IN BORING :
NO GROUNDWATER ENCOUNTERED DURING DRILLING.
HOLE OPEN TO 15.0 FT. AT END OF DRILLING.

Geotest Engineering, Inc.

FIGURE A-7A

LOG OF BORING NO. B-9

PROJECT : Surface Water Transmission Program – 96" Clinton Drive Condition Assessment; WBS No. S-000901-0008-3 Houston, Texas

PROJECT NO. : 1140195201

LOCATION : See Plan of Borings (Figure 2.3)

COMPLETION DEPTH : 9.0 FT.

SURFACE ELEVATION : Existing Grade

DATE : 11-21-13

SAMPLER : Shelby Tube/Split Spoon

DRY AUGER : 0.0 TO 9.0 FT.

WET ROTARY : -- TO -- FT.

ELEVATION, FEET	DEPTH, FEET	SYMBOL	SAMPLES	DESCRIPTION OF MATERIAL	STANDARD PENETRATION TEST, BLOWS PER FOOT	PERCENT PASSING NO. 200 SIEVE	DRY UNIT WEIGHT, PCF	NATURAL MOISTURE CONTENT, %	LIQUID LIMIT, %	PLASTIC LIMIT, %	PLASTICITY INDEX, %	UNDRAINED SHEAR STRENGTH, TSF (○ HAND PENETROMETER; ● UNCONFINED COMPRESSION; ■ UNCONSOLIDATED-UNDRAINED TRIAXIAL COMPRESSION; △ TORVANE) 0.5 1.0 1.5 2.0 2.5
	0			4.5" Asphalt								
				9" Concrete over 6.5" Cement Stabilized Sand								
				Stiff dark gray LEAN CLAY (CL)								○
	5			-w/shell and sand seams 20"-4'								○
				-w/sand on bottom 2'-4'								
				-w/sand seams 4'-9'								
				-brown sand 7'-9'								
	10			NOTE : Hit obstruction at 9 feet and offset to boring B-9A.								
	15											
	20											
	25											
	30											
	35											

DEPTH TO WATER IN BORING :
NO GROUNDWATER ENCOUNTERED DURING DRILLING.
HOLE OPEN TO 9.0 FT. AT END OF DRILLING.

Geotest Engineering, Inc.

FIGURE A-8

LOG OF BORING NO. B-9A

PROJECT : Surface Water Transmission Program – 96" Clinton Drive Condition Assessment; WBS No. S-000901-0008-3 Houston, Texas

PROJECT NO. : 1140195201

LOCATION : See Plan of Borings (Figure 2.3)

COMPLETION DEPTH : 15.0 FT.

SURFACE ELEVATION : Existing Grade

DATE : 11-21-13

SAMPLER : Shelby Tube/Split Spoon

DRY AUGER : 0.0 TO 15.0 FT.

WET ROTARY : -- TO -- FT.

ELEVATION, FEET	DEPTH, FEET	SYMBOL	SAMPLES	DESCRIPTION OF MATERIAL	STANDARD PENETRATION TEST, BLOWS PER FOOT	PERCENT PASSING NO. 200 SIEVE	DRY UNIT WEIGHT, PCF	NATURAL MOISTURE CONTENT, %	LIQUID LIMIT, %	PLASTIC LIMIT, %	PLASTICITY INDEX, %
	0			20" Asphalt, Shell and Gravel Mix							
				Stiff dark gray LEAN CLAY (CL) w/sand				19			
				-stiff to very stiff 2'-4'				21			
				-very stiff 4'-6'							
	5					81	110	18	49	21	28
				Hard brown and gray SANDY LEAN CLAY (CL) w/ferrous nodules and ferrous stains				18			
				-very stiff 7'-10'				21			
	10					62	113	16	35	17	18
				Gray FINE SAND (SP-SM) w/silt							
				-w/clay seams 10'-12'				12			
				-medium dense 12'-15'	25	11		8			
	15				24			9			
	20										
	25										
	30										
	35										

UNDRAINED SHEAR STRENGTH, TSF

○ HAND PENETROMETER

● UNCONFINED COMPRESSION

■ UNCONSOLIDATED-UNDRAINED TRIAXIAL COMPRESSION

△ TORVANE

0.5 1.0 1.5 2.0 2.5

DEPTH TO WATER IN BORING :
NO GROUNDWATER ENCOUNTERED DURING DRILLING.
HOLE OPEN TO 15.0 FT. AT END OF DRILLING.

Geotest Engineering, Inc.

FIGURE A-8A

LOG OF BORING NO. B-10

PROJECT : Surface Water Transmission Program – 96" Clinton Drive Condition Assessment; WBS No. S-000901-0008-3 Houston, Texas

PROJECT NO. : 1140195201

LOCATION : See Plan of Borings (Figure 2.3)

COMPLETION DEPTH : 15.0 FT.

SURFACE ELEVATION : Existing Grade

DATE : 11-21-13

SAMPLER : Shelby Tube/Split Spoon

DRY AUGER : 0.0 TO 15.0 FT.

WET ROTARY : -- TO -- FT.

ELEVATION, FEET	DEPTH, FEET	SYMBOL	SAMPLES	DESCRIPTION OF MATERIAL	STANDARD PENETRATION TEST, BLOWS PER FOOT	PERCENT PASSING NO. 200 SIEVE	DRY UNIT WEIGHT, PCF	NATURAL MOISTURE CONTENT, %	LIQUID LIMIT, %	PLASTIC LIMIT, %	PLASTICITY INDEX, %
	0			4.5" Asphalt							
				8.5" Concrete over 6" Sand and Clay Mix				24			
				FILL: stiff dark gray and brown lean clay w/gravel, sand seams, ferrous nodules and ferrous stains				20			
	5			–stiff to very stiff 4'–6'		83	110	21	42	17	25
				–reddish brown and gray 4'–15'				25			
	10			–stiff to very stiff 10'–12'				19			
				–fat clay w/sand and calcareous nodules 10'–15'		79	103	21	50	19	31
								27			
	15							22			
	20										
	25										
	30										
	35										

UNDRAINED SHEAR STRENGTH, TSF

○ HAND PENETROMETER

● UNCONFINED COMPRESSION

■ UNCONSOLIDATED-UNDRAINED TRIAXIAL COMPRESSION

△ TORVANE

0.5 1.0 1.5 2.0 2.5

DEPTH TO WATER IN BORING :
NO GROUNDWATER ENCOUNTERED DURING DRILLING.
HOLE OPEN TO 15.0 FT. AT END OF DRILLING.

Geotest Engineering, Inc.

FIGURE A-9

LOG OF BORING NO. B-11

PROJECT : Surface Water Transmission Program – 96" Clinton Drive Condition Assessment; WBS No. S-000901-0008-3 Houston, Texas

PROJECT NO. : 1140195201

LOCATION : See Plan of Borings (Figure 2.3)

COMPLETION DEPTH : 15.0 FT.

SURFACE ELEVATION : Existing Grade

DATE : 11-21-13

SAMPLER : Shelby Tube/Split Spoon

DRY AUGER : 0.0 TO 15.0 FT.

WET ROTARY : -- TO -- FT.

ELEVATION, FEET	DEPTH, FEET	SYMBOL	SAMPLES	DESCRIPTION OF MATERIAL	STANDARD PENETRATION TEST, BLOWS PER FOOT	PERCENT PASSING NO. 200 SIEVE	DRY UNIT WEIGHT, PCF	NATURAL MOISTURE CONTENT, %	LIQUID LIMIT, %	PLASTIC LIMIT, %	PLASTICITY INDEX, %
	0			5" Asphalt over 10" Cement Stabilized Oyster Shell							
				FILL: medium stiff to very stiff yellowish brown sandy lean				25			
				–brown and gray w/sand on bottom 2'–4'				27			
	5			–soft 2'–6'		55		27	38	14	24
				–brown and gray clayey sand 8'–11'				25			
	10					24		26			
				Medium stiff to very stiff reddish brown and gray LEAN CLAY (CL) w/sand			112	17	26	12	14
				–hard 12'–14'				18			
	15			–medium stiff to stiff 14'–15'				20			
	20										
	25										
	30										
	35										

UNDRAINED SHEAR STRENGTH, TSF

○ HAND PENETROMETER

● UNCONFINED COMPRESSION

■ UNCONSOLIDATED-UNDRAINED TRIAXIAL COMPRESSION

△ TORVANE

0.5 1.0 1.5 2.0 2.5

DEPTH TO WATER IN BORING :
▽: FREE WATER ENCOUNTERED AT 8.0 FT. DURING DRILLING.
HOLE OPEN TO 15.0 FT. AT END OF DRILLING.

Geotest Engineering, Inc.

LOG OF BORING NO. B-12

PROJECT : Surface Water Transmission Program – 96" Clinton Drive Condition Assessment; WBS No. S-000901-0008-3 Houston, Texas

PROJECT NO. : 1140195201

LOCATION : See Plan of Borings (Figure 2.3)

COMPLETION DEPTH : 15.0 FT.

SURFACE ELEVATION : Existing Grade

DATE : 11-21-13

SAMPLER : Shelby Tube/Split Spoon
DRY AUGER : 0.0 TO 15.0 FT.
WET ROTARY : -- TO -- FT.

UNDRAINED SHEAR STRENGTH, TSF
○ HAND PENETROMETER
● UNCONFINED COMPRESSION
■ UNCONSOLIDATED-UNDRAINED TRIAXIAL COMPRESSION
△ TORVANE

ELEVATION, FEET	DEPTH, FEET	SYMBOL	SAMPLES	DESCRIPTION OF MATERIAL	STANDARD PENETRATION TEST, BLOWS PER FOOT	PERCENT PASSING NO. 200 SIEVE	DRY UNIT WEIGHT, PCF	NATURAL MOISTURE CONTENT, %	LIQUID LIMIT, %	PLASTIC LIMIT, %	PLASTICITY INDEX, %
	0			15.5" Concrete							
				Very stiff gray and brown FAT CLAY (CH) w/sand, calcareous and ferrous nodules, shell and ferrous stains				22			
								18			
								28			
	5			–stiff to very stiff brown 2'–4'		83	101	23	63	24	39
				–stiff 4'–5'							
				–reddish brown and gray 4'–8'				20			
				–stiff to very stiff 5'–6'							
	10			Very stiff gray and brown LEAN CLAY (CL) w/sand				17			
				Stiff to very stiff yellowish brown and gray FAT CLAY (CH) w/silt seams		94	105	22	61	24	37
				–very stiff 12'–14'				19			
				–stiff 14'–15'				22			
	15										
	20										
	25										
	30										
	35										

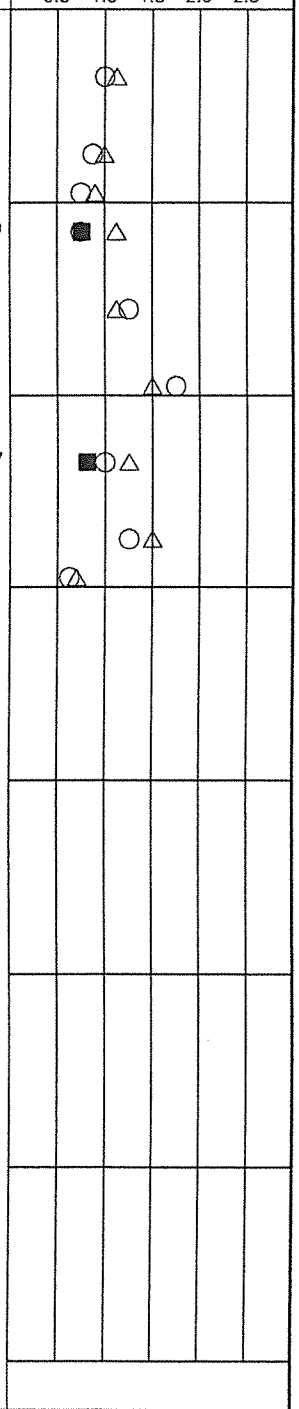

DEPTH TO WATER IN BORING :
NO GROUNDWATER ENCOUNTERED DURING DRILLING.
HOLE OPEN TO 15.0 FT. AT END OF DRILLING.

Geotest Engineering, Inc.

LOG OF BORING NO. B-13

PROJECT : Surface Water Transmission Program – 96" Clinton Drive Condition Assessment; WBS No. S-000901-0008-3 Houston, Texas

PROJECT NO. : 1140195201

LOCATION : See Plan of Borings (Figure 2.3)

COMPLETION DEPTH : 15.0 FT.

SURFACE ELEVATION : Existing Grade

DATE : 11-21-13

SAMPLER : Shelby Tube/Split Spoon

DRY AUGER : 0.0 TO 15.0 FT.

WET ROTARY : -- TO -- FT.

UNDRAINED SHEAR STRENGTH, TSF: ○ HAND PENETROMETER ● UNCONFINED COMPRESSION ■ UNCONSOLIDATED-UNDRAINED TRIAXIAL COMPRESSION △ TORVANE

ELEVATION, FEET	DEPTH, FEET	DESCRIPTION OF MATERIAL	STANDARD PENETRATION TEST, BLOWS PER FOOT	PERCENT PASSING NO. 200 SIEVE	DRY UNIT WEIGHT, PCF	NATURAL MOISTURE CONTENT, %	LIQUID LIMIT, %	PLASTIC LIMIT, %	PLASTICITY INDEX, %
	0	12.75" Concrete							
		1.5" Asphalt over 6.5" Concrete over 5.5" Clay Mix							
		Stiff dark gray FAT CLAY (CH) w/ferrous stains				28			
	5	-gray 4'-6'				28			
		-w/sand seams 6'-12'							
		-gray and brown 6'-15'							
		-very stiff 8'-12'		93	102	26	67	25	42
	10					23			
		-stiff to very stiff 12'-14'				21			
		-w/calcareous and ferrous nodules 13'-15'		92	105	22	57	23	34
		-very stiff 14'-15'				21			
	15								
	20								
	25								
	30								
	35								

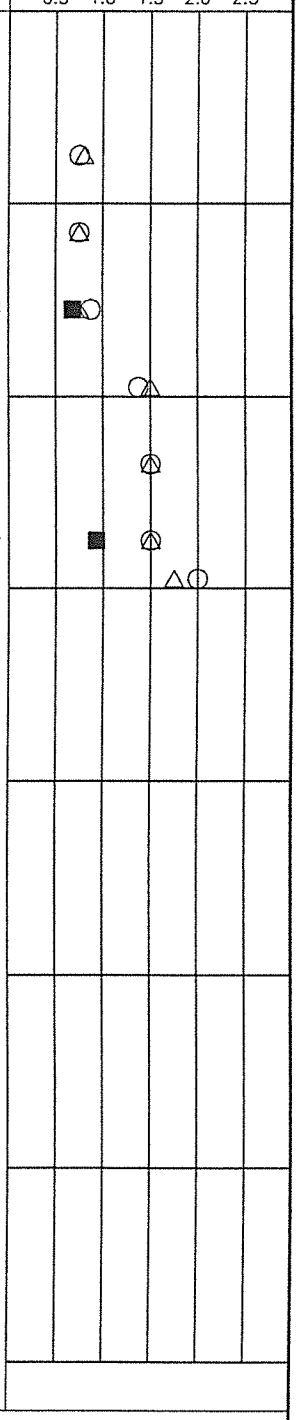

DEPTH TO WATER IN BORING :
NO GROUNDWATER ENCOUNTERED DURING DRILLING.
HOLE OPEN TO 15.0 FT. AT END OF DRILLING.

Geotest Engineering, Inc.

FIGURE A-12

Job No. 1140195201

SYMBOLS AND TERMS USED ON BORING LOGS

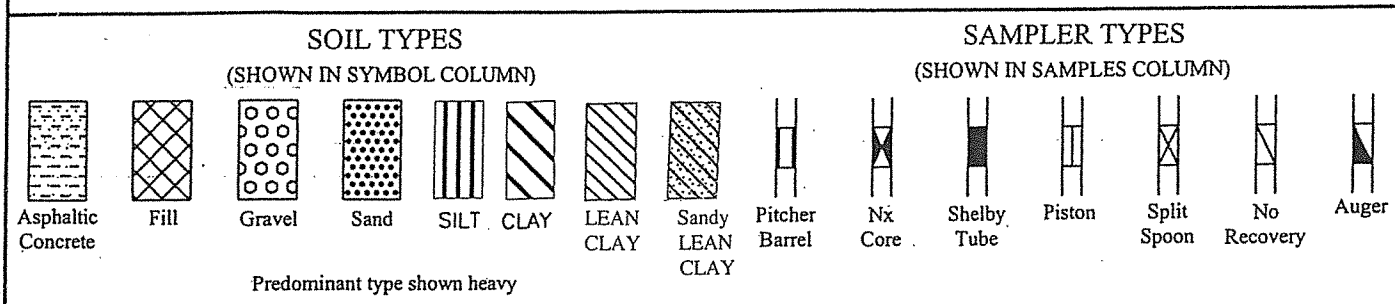

TERMS DESCRIBING CONSISTENCY OR CONDITION

Basic Soil Type	Density or Consistency	Standard Penetration Resistance, (1) Blows/ft.	Unconfined Compressive Strength (q_u), (2) Tons/sq. ft.
Cohesionless	Very loose	Less than 4	Not applicable
	Loose	4 to <10	Not applicable
	Medium dense	10 to <30	Not applicable
	Dense	30 to <50	Not applicable
	Very dense	50 or greater	Not applicable
Cohesive	Very soft	Less than 2	Less than 0.25
	Soft	2 to <4	0.25 to <0.5
	Firm/Medium stiff	4 to <8	0.5 to <1.0
	Stiff	8 to <15	1.0 to <2.0
	Very stiff	15 to <30	2.0 to <4.0
	Hard	30 or greater	4 or greater

(1) Number of blows from 140-lb. weight falling 30-in. to drive 2-in. OD, 1-3/8-in. ID, split barrel sampler (ASTM D1586)

(2) q_u may also be approximated using a pocket penetrometer

TERMS CHARACTERIZING SOIL STRUCTURE

Parting: -paper thin in size Seam: -1/8" to 3" thick Layer: -greater than 3"

Slickensided	- having inclined planes of weakness that are slick and glossy in appearance.
Fissured	- containing shrinkage cracks, frequently filled with fine sand or silt; usually more or less vertical.
Laminated	- composed of thin layers of varying color and texture.
Interbedded	- composed of alternate layers of different soil types.
Calcareous	- containing appreciable quantities of calcium carbonate.
Well graded	- having wide range in grain sizes and substantial amounts of all intermediate particle sizes.
Poorly graded	- predominantly of one grain size, or having a range of sizes with some intermediate size missing.
Flocculated	- pertaining to cohesive soils that exhibit a loose knit or flakey structure.

APPENDIX B

	Figure
Summary of Laboratory Test Results	B-1 thru B-12
Grain Size Distribution Curves	B-13

SUMMARY OF LABORATORY TEST RESULTS

GEOTEST ENGINEERING, INC.

PROJECT NAME: Surface Water Transmission Program – 96] Clinton Drive Condition Assessment; WBS No. S-000901-0008-3 Houston, Texas

PROJECT NUMBER: 1140195201

BORING NO.	SAMPLE No.	SAMPLE Depth (ft.) Top	SAMPLE Depth (ft.) Bottom	SAMPLE Type	SPT (blows/ft.)	WATER CONTENT (%)	DRY DENSITY (pcf)	ATTERBERG LIMITS LL	ATTERBERG LIMITS PL	ATTERBERG LIMITS PI	PASSING NO. 200 SIEVE (%)	UNCONFINED COMPRESSION TEST Shear Strength (tsf)	TRIAXIAL COMPRESSION TEST (U-U) Shear Strength (tsf)	TRIAXIAL COMPRESSION TEST (U-U) Conf. Press. (tsf)	TORVANE Shear Strength (tsf)	POCKET PENE-TROMETER Shear Strength (tsf)	TYPE OF MATERIAL
B-1	1	0.0	2.0	UD		13									2.25	2.25	Fill
	2	2.0	4.0	UD		17									0.30	0.88	Silty Clay
	3	4.0	6.0	UD		18	118	21	14	7	71		0.24	0.43	0.50	0.13	Silty Clay
	4	6.0	8.0	UD		17									0.88	1.38	Sandy Lean Clay
	5	8.0	10.0	UD		17									1.00	1.50	Sandy Lean Clay
	6	10.0	12.0	UD		22									1.13	1.63	Sandy Lean Clay
	7	12.0	14.0	UD		23									1.75	1.75	Fat Clay
	8	14.0	16.0	UD		19	111	58	23	35	87		1.15	1.15	1.75	1.75	Fat Clay
	9	16.0	18.0	UD		19									2.00	2.00	Fat Clay
	10	18.0	20.0	UD		26									1.50	1.88	Fat Clay
	11	23.0	25.0	UD		21									1.88	2.25	Fat Clay
	12	28.0	30.0	UD		17									1.75	2.25	Fat Clay
	13	33.0	35.0	UD		21									1.00	2.00	Sandy Lean Clay

LEGEND:
UD = UNDISTURBED SAMPLE, EXTRUDED IN FIELD
SS = SPLIT SPOON SAMPLE
AG = AUGER CUTTINGS
PB = PITCHER BARREL SAMPLE
Nx = Nx-DOUBBLE BARREL SAMPLE

SPT = Standard Penetration Test
LL = Liquid Limit
PL = Plastic Limit
PI = Plasticity Index

FIGURE B-1

SUMMARY OF LABORATORY TEST RESULTS

GEOTEST ENGINEERING, INC.

PROJECT NAME: Surface Water Transmission Program – 96] Clinton Drive Condition Assessment; WBS No. S-000901-0008-3 Houston, Texas

PROJECT NUMBER: 1140195201

BORING NO.	SAMPLE No.	SAMPLE Depth (ft.) Top	SAMPLE Depth (ft.) Bottom	SAMPLE Type	SPT (blows/ft.)	WATER CONTENT (%)	DRY DENSITY (pcf)	ATTERBERG LIMITS LL	ATTERBERG LIMITS PL	ATTERBERG LIMITS PI	PASSING NO. 200 SIEVE (%)	UNCONFINED COMPRESSION TEST Shear Strength (tsf)	TRIAXIAL COMPRESSION TEST (U-U) Shear Strength (tsf)	TRIAXIAL COMPRESSION TEST (U-U) Conf. Press. (tsf)	TORVANE Shear Strength (tsf)	POCKET PENE-TROMETER Shear Strength (tsf)	TYPE OF MATERIAL
B-2A	2	1.1	2.0	UD		27									0.55	0.38	Fat Clay
	3	2.0	4.0	UD		19									1.13	0.63	Fat Clay
	4	4.0	6.0	UD		24	97	62	25	37	90		0.98	0.43	1.25	1.00	Fat Clay
	5	6.0	8.0	UD		25									1.13	1.50	Fat Clay
	6	8.0	10.0	UD		21									1.75	1.38	Fat Clay
	7	10.0	12.0	UD		30									1.50	1.38	Fat Clay
	8	12.0	14.0	UD		19		38	18	20	96				0.75	1.00	Lean Clay
	9	14.0	16.0	UD		25									1.75	2.25	Fat Clay
	10	16.0	18.0	UD		21	107	64	25	39	100		0.77	1.30	2.25	2.13	Fat Clay
	11	18.0	20.0	UD		22									2.13	2.25	Fat Clay
	12	22.0	23.0	UD		17									0.40	0.75	Sandy Lean Clay
	13	23.0	25.0	UD		15									1.50	1.50	Sandy Lean Clay

LEGEND:
UD = UNDISTURBED SAMPLE, EXTRUDED IN FIELD
SS = SPLIT SPOON SAMPLE
AG = AUGER CUTTINGS
PB = PITCHER BARREL SAMPLE
Nx = Nx-DOUBBLE BARREL SAMPLE

SPT = Standard Penetration Test
LL = Liquid Limit
PL = Plastic Limit
PI = Plasticity Index

FIGURE B-2A

SUMMARY OF LABORATORY TEST RESULTS

GEOTEST ENGINEERING, INC.

PROJECT NAME: Surface Water Transmission Program – 96] Clinton Drive Condition Assessment; WBS No. S-000901-0008-3 Houston, Texas

PROJECT NUMBER: 1140195201

BORING NO.	SAMPLE No.	SAMPLE Depth (ft.) Top	SAMPLE Depth (ft.) Bottom	SAMPLE Type	SPT (blows/ft.)	WATER CONTENT (%)	DRY DENSITY (pcf)	ATTERBERG LIMITS LL	ATTERBERG LIMITS PL	ATTERBERG LIMITS PI	PASSING NO. 200 SIEVE (%)	UNCONFINED COMPRESSION TEST Shear Strength (tsf)	TRIAXIAL COMPRESSION TEST (U-U) Shear Strength (tsf)	TRIAXIAL COMPRESSION TEST (U-U) Conf. Press. (tsf)	TORVANE Shear Strength (tsf)	POCKET PENE-TROMETER Shear Strength (tsf)	TYPE OF MATERIAL
B-3B	3	1.2	2.0	UD		21											Fill
	4	2.0	4.0	UD		19									1.25	0.88	Fill
	5	4.0	6.0	UD		23									0.45	0.50	Fill
	6	6.0	8.0	UD		27	95	61	22	39	88		0.63	0.58	0.85	0.63	Fat Clay
	7	8.0	10.0	UD		23									1.38	1.25	Fat Clay
	8	10.0	12.0	UD		21									1.50	1.13	Fat Clay
	9	12.0	14.0	UD		16									0.63	1.25	Lean Clay
	10	14.0	15.0	UD		20	110	38	20	18	88		0.75	1.08	1.00	1.63	Lean Clay
	11	15.0	16.0	UD		20									0.75	1.63	Lean Clay
	12	16.0	18.0	UD		18									1.00	1.00	Lean Clay
	13	18.0	20.0	UD		19	111	50	21	29	85		1.55	1.44	2.25	2.25	Fat Clay
	14	23.0	25.0	UD		15									1.88	2.25	Sandy Lean Clay

LEGEND:
UD = UNDISTURBED SAMPLE, EXTRUDED IN FIELD
SS = SPLIT SPOON SAMPLE
AG = AUGER CUTTINGS
PB = PITCHER BARREL SAMPLE
Nx = Nx-DOUBBLE BARREL SAMPLE

SPT = Standard Penetration Test
LL = Liquid Limit
PL = Plastic Limit
PI = Plasticity Index

FIGURE B-3B

SUMMARY OF LABORATORY TEST RESULTS

GEOTEST ENGINEERING, INC.

PROJECT NAME: Surface Water Transmission Program – 96] Clinton Drive Condition Assessment; WBS No. S-000901-0008-3 Houston, Texas

PROJECT NUMBER: 1140195201

BORING NO.	SAMPLE No.	SAMPLE Depth (ft.) Top	SAMPLE Depth (ft.) Bottom	SAMPLE Type	SPT (blows/ft.)	WATER CONTENT (%)	DRY DENSITY (pcf)	ATTERBERG LIMITS LL	ATTERBERG LIMITS PL	ATTERBERG LIMITS PI	PASSING NO. 200 SIEVE (%)	UNCONFINED COMPRESSION TEST Shear Strength (tsf)	TRIAXIAL COMPRESSION TEST (U-U) Shear Strength (tsf)	TRIAXIAL COMPRESSION TEST (U-U) Conf. Press. (tsf)	TORVANE Shear Strength (tsf)	POCKET PENE-TROMETER Shear Strength (tsf)	TYPE OF MATERIAL
B-4B	3	1.5	2.0	AG		20											Fill
	4	2.0	4.0	UD		19									0.40	0.38	Fill
	5	4.5	6.0	SS	4	9											Fill
	6	6.5	8.0	SS	3	14											Fill
	7	8.5	10.0	SS	5	23					65						Fill
	8	10.5	12.0	SS	4	18											Fill
	9	12.0	14.0	UD		21											Fill
	10	14.0	16.0	UD		23		24	14	10	57				0.10	0.13	Fill
	11	16.0	18.0	UD		27									0.12	0.13	Fill
	12	18.0	20.0	UD		53	68	68	26	42	100		0.16	1.44	0.13		Fat Clay
	13	23.0	25.0	UD		24									2.00	2.25	Fat Clay

LEGEND:
UD = UNDISTURBED SAMPLE, EXTRUDED IN FIELD
SS = SPLIT SPOON SAMPLE
AG = AUGER CUTTINGS
PB = PITCHER BARREL SAMPLE
Nx = Nx-DOUBBLE BARREL SAMPLE

SPT = Standard Penetration Test
LL = Liquid Limit
PL = Plastic Limit
PI = Plasticity Index

FIGURE B-4B

SUMMARY OF LABORATORY TEST RESULTS

GEOTEST ENGINEERING, INC.

PROJECT NAME: Surface Water Transmission Program – 96] Clinton Drive Condition Assessment; WBS No. S-000901-0008-3 Houston, Texas

PROJECT NUMBER: 1140195201

BORING NO.	SAMPLE No.	SAMPLE Depth (ft.) Top	SAMPLE Depth (ft.) Bottom	SAMPLE Type	SPT (blows/ft.)	WATER CONTENT (%)	DRY DENSITY (pcf)	ATTERBERG LIMITS LL	ATTERBERG LIMITS PL	ATTERBERG LIMITS PI	PASSING NO. 200 SIEVE (%)	UNCONFINED COMPRESSION TEST Shear Strength (tsf)	TRIAXIAL COMPRESSION TEST (U-U) Shear Strength (tsf)	TRIAXIAL COMPRESSION TEST (U-U) Conf. Press. (tsf)	TORVANE Shear Strength (tsf)	POCKET PENE-TROMETER Shear Strength (tsf)	TYPE OF MATERIAL
B-5B	1	0.0	2.0	AG		22											Fill
	2	2.0	4.0	AG		23											Fill
	3	4.0	6.0	UD		22	102	49	21	28	83		0.94	0.43	1.00	0.75	Fill
	4	6.0	8.0	UD		20									1.13	1.25	Lean Clay
	5	8.0	10.0	UD		20		34	19	15	88				0.88	1.25	Lean Clay
	6	10.5	12.0	SS	9	20					76						Silt
	7	12.0	14.0	UD		22									1.75	1.75	Fat Clay
	8	14.0	16.0	UD		22	103	68	26	42	89		1.27	1.15	1.75	1.75	Fat Clay
	9	16.0	18.0	UD		21									2.00	2.13	Fat Clay
	10	18.0	20.0	UD		21									1.88	2.25	Fat Clay
	11	23.0	25.0	UD		24									0.50	1.00	Sandy Lean Clay

LEGEND:
UD = UNDISTURBED SAMPLE, EXTRUDED IN FIELD
SS = SPLIT SPOON SAMPLE
AG = AUGER CUTTINGS
PB = PITCHER BARREL SAMPLE
Nx = Nx-DOUBBLE BARREL SAMPLE

SPT = Standard Penetration Test
LL = Liquid Limit
PL = Plastic Limit
PI = Plasticity Index

FIGURE B-5B

SUMMARY OF LABORATORY TEST RESULTS

GEOTEST ENGINEERING, INC.

PROJECT NAME: Surface Water Transmission Program – 96] Clinton Drive Condition Assessment; WBS No. S-000901-0008-3 Houston, Texas

PROJECT NUMBER: 1140195201

BORING NO.	SAMPLE No.	SAMPLE Depth (ft.) Top	SAMPLE Depth (ft.) Bottom	SAMPLE Type	SPT (blows/ft.)	WATER CONTENT (%)	DRY DENSITY (pcf)	ATTERBERG LIMITS LL	ATTERBERG LIMITS PL	ATTERBERG LIMITS PI	PASSING NO. 200 SIEVE (%)	UNCONFINED COMPRESSION TEST Shear Strength (tsf)	TRIAXIAL COMPRESSION TEST (U-U) Shear Strength (tsf)	TRIAXIAL COMPRESSION TEST (U-U) Conf. Press. (tsf)	TORVANE Shear Strength (tsf)	POCKET PENE-TROMETER Shear Strength (tsf)	TYPE OF MATERIAL
B-6	1	0.0	2.0	AG		15											Fill
	2	2.0	4.0	UD		22									1.25	0.88	Fill
	3	4.0	6.0	UD		22	109	57	21	36	90		1.12	0.43	1.25	0.88	Fat Clay
	4	6.0	8.0	UD		19									1.00	0.88	Lean Clay
	5	8.0	10.0	UD		15	123	39	18	21	94		1.75	0.72	1.88	2.25	Lean Clay
	6	10.0	12.0	UD		21									0.25	0.63	Lean Clay
	7	12.0	14.0	UD		28									1.25	1.50	Fat Clay
	8	14.0	16.0	UD		25									1.75	1.75	Fat Clay
	9	16.0	18.0	UD		26	99	74	27	47	100		1.39	1.30	1.88	1.75	Fat Clay
	10	18.0	20.0	UD		27									2.25	1.75	Fat Clay
	11	21.0	23.0	UD		27									2.25	1.75	Fat Clay
	12	23.0	25.0	UD		16									1.75	2.25	Lean Clay
	13	28.0	30.0	UD		17	122	57	23	34	83		2.31	2.16	2.25	2.25	Fat Clay
	14	33.0	35.0	UD		17									1.75	1.88	Fat Clay
	15	38.0	40.0	UD		18									2.25	2.25	Fat Clay

LEGEND:
UD = UNDISTURBED SAMPLE, EXTRUDED IN FIELD
SS = SPLIT SPOON SAMPLE
AG = AUGER CUTTINGS
PB = PITCHER BARREL SAMPLE
Nx = Nx-DOUBBLE BARREL SAMPLE

SPT = Standard Penetration Test
LL = Liquid Limit
PL = Plastic Limit
PI = Plasticity Index

FIGURE B-6

SUMMARY OF LABORATORY TEST RESULTS

GEOTEST ENGINEERING, INC.

PROJECT NAME: Surface Water Transmission Program – 96] Clinton Drive Condition Assessment; WBS No. S-000901-0008-3 Houston, Texas

PROJECT NUMBER: 1140195201

BORING NO.	SAMPLE No.	SAMPLE Depth (ft.) Top	SAMPLE Depth (ft.) Bottom	SAMPLE Type	SPT (blows/ft.)	WATER CONTENT (%)	DRY DENSITY (pcf)	ATTERBERG LIMITS LL	ATTERBERG LIMITS PL	ATTERBERG LIMITS PI	PASSING NO. 200 SIEVE (%)	UNCONFINED COMPRESSION TEST Shear Strength (tsf)	TRIAXIAL COMPRESSION TEST (U-U) Shear Strength (tsf)	TRIAXIAL COMPRESSION TEST (U-U) Conf. Press. (tsf)	TORVANE Shear Strength (tsf)	POCKET PENE-TROMETER Shear Strength (tsf)	TYPE OF MATERIAL
B-8A	1	0.0	1.0	UD		20											Fill
	2	1.0	2.0	UD		19									1.75	0.63	Fill
	3	2.0	4.0	UD		24									0.70	0.25	Fill
	4	4.0	6.0	UD		27	99	61	24	37	87		0.47	0.43	0.55	0.38	Fat Clay
	5	6.0	8.0	UD		27									0.70	0.75	Fat Clay
	6	8.0	10.0	UD		24									1.50	1.38	Fat Clay
	7	10.0	12.0	UD		23	104	65	25	40	90		0.64	0.86	1.50	1.38	Fat Clay
	8	12.0	14.0	UD		21									2.00	2.13	Fat Clay
	9	14.0	15.0	UD		22									1.75	2.13	Fat Clay

LEGEND:
UD = UNDISTURBED SAMPLE, EXTRUDED IN FIELD
SS = SPLIT SPOON SAMPLE
AG = AUGER CUTTINGS
PB = PITCHER BARREL SAMPLE
Nx = Nx-DOUBBLE BARREL SAMPLE

SPT = Standard Penetration Test
LL = Liquid Limit
PL = Plastic Limit
PI = Plasticity Index

FIGURE B-7A

SUMMARY OF LABORATORY TEST RESULTS

GEOTEST ENGINEERING, INC.

PROJECT NAME: Surface Water Transmission Program – 96] Clinton Drive Condition Assessment; WBS No. S-000901-0008-3 Houston, Texas

PROJECT NUMBER: 1140195201

BORING NO.	SAMPLE No.	Depth (ft.) Top	Depth (ft.) Bottom	Type	SPT (blows/ft.)	WATER CONTENT (%)	DRY DENSITY (pcf)	ATTERBERG LIMITS LL	ATTERBERG LIMITS PL	ATTERBERG LIMITS PI	PASSING NO. 200 SIEVE (%)	UNCONFINED COMPRESSION TEST Shear Strength (tsf)	TRIAXIAL COMPRESSION TEST (U-U) Shear Strength (tsf)	TRIAXIAL COMPRESSION TEST (U-U) Conf. Press. (tsf)	TORVANE Shear Strength (tsf)	POCKET PENE-TROMETER Shear Strength (tsf)	TYPE OF MATERIAL
B-9A	1	0.0	1.7	UD		7											Asphalt
	2	1.7	2.0	UD		19									0.75	0.88	Lean Clay
	3	2.0	4.0	UD		21									0.75	1.13	Lean Clay
	4	4.0	6.0	UD		18	110	49	21	28	81		1.12	0.43	1.50	1.38	Lean Clay
	5	6.0	7.0	UD		18									2.00	2.00	Sandy Lean Clay
	6	7.0	8.0	UD		21									1.13	1.13	Sandy Lean Clay
	7	8.0	10.0	UD		16	113	35	17	18	62		1.53	0.72	1.25	1.88	Sandy Lean Clay
	8	10.0	12.0	UD		12											Sand
	9	12.0	13.5	SS	25	8					11						Sand
	10	13.5	15.0	SS	24	9											Sand

LEGEND:
UD = UNDISTURBED SAMPLE, EXTRUDED IN FIELD
SS = SPLIT SPOON SAMPLE
AG = AUGER CUTTINGS
PB = PITCHER BARREL SAMPLE
Nx = Nx-DOUBBLE BARREL SAMPLE

SPT = Standard Penetration Test
LL = Liquid Limit
PL = Plastic Limit
PI = Plasticity Index

FIGURE B-8A

SUMMARY OF LABORATORY TEST RESULTS

GEOTEST ENGINEERING, INC.

PROJECT NAME: Surface Water Transmission Program – 96] Clinton Drive Condition Assessment; WBS No. S-000901-0008-3 Houston, Texas

PROJECT NUMBER: 1140195201

BORING NO.	SAMPLE No.	SAMPLE Depth (ft.) Top	SAMPLE Depth (ft.) Bottom	SAMPLE Type	SPT (blows/ft.)	WATER CONTENT (%)	DRY DENSITY (pcf)	ATTERBERG LIMITS LL	ATTERBERG LIMITS PL	ATTERBERG LIMITS PI	PASSING NO. 200 SIEVE (%)	UNCONFINED COMPRESSION TEST Shear Strength (tsf)	TRIAXIAL COMPRESSION TEST (U-U) Shear Strength (tsf)	TRIAXIAL COMPRESSION TEST (U-U) Conf. Press. (tsf)	TORVANE Shear Strength (tsf)	POCKET PENE-TROMETER Shear Strength (tsf)	TYPE OF MATERIAL
B-10	1	0.0	2.0	UD		24									0.55	0.50	Fill
	2	2.0	4.0	UD		20									0.90	0.50	Fill
	3	4.0	6.0	UD		21	110	42	17	25	83		0.70	0.43	1.00	0.63	Fill
	4	6.0	8.0	UD		25									0.80	0.50	Fill
	5	8.0	10.0	UD		19									0.80	0.50	Fill
	6	10.0	12.0	UD		21	103	50	19	31	79		0.57	0.86	1.00	1.00	Fill
	7	12.0	14.0	UD		27									0.60	0.50	Fill
	8	14.0	15.0	UD		22									0.60	0.50	Fill

LEGEND:
UD = UNDISTURBED SAMPLE, EXTRUDED IN FIELD
SS = SPLIT SPOON SAMPLE
AG = AUGER CUTTINGS
PB = PITCHER BARREL SAMPLE
Nx = Nx-DOUBBLE BARREL SAMPLE

SPT = Standard Penetration Test
LL = Liquid Limit
PL = Plastic Limit
PI = Plasticity Index

FIGURE B-9

SUMMARY OF LABORATORY TEST RESULTS

GEOTEST ENGINEERING, INC.

PROJECT NAME: Surface Water Transmission Program – 96] Clinton Drive Condition Assessment; WBS No. S-000901-0008-3 Houston, Texas

PROJECT NUMBER: 1140195201

BORING NO.	SAMPLE No.	SAMPLE Depth (ft.) Top	SAMPLE Depth (ft.) Bottom	SAMPLE Type	SPT (blows/ft.)	WATER CONTENT (%)	DRY DENSITY (pcf)	ATTERBERG LIMITS LL	ATTERBERG LIMITS PL	ATTERBERG LIMITS PI	PASSING NO. 200 SIEVE (%)	UNCONFINED COMPRESSION TEST Shear Strength (tsf)	TRIAXIAL COMPRESSION TEST (U-U) Shear Strength (tsf)	TRIAXIAL COMPRESSION TEST (U-U) Conf. Press. (tsf)	TORVANE Shear Strength (tsf)	POCKET PENE-TROMETER Shear Strength (tsf)	TYPE OF MATERIAL
B-11	2	1.3	2.0	UD		25									1.00	0.25	Fill
	3	2.0	4.0	UD		27									0.20	0.13	Fill
	4	4.0	6.0	UD		27		38	14	24	55				0.14	0.13	Fill
	5	6.0	8.0	UD		25									0.20	0.10	Fill
	6	8.0	10.0	UD		26											Clayey Sand
	7	10.0	12.0	UD		17	112	26	12	14	24		0.45	0.86	0.75	1.13	Lean Clay
	8	12.0	14.0	UD		18									2.25	2.25	Lean Clay
	9	14.0	15.0	UD		20									0.75	0.25	Lean Clay

LEGEND:
UD = UNDISTURBED SAMPLE, EXTRUDED IN FIELD
SS = SPLIT SPOON SAMPLE
AG = AUGER CUTTINGS
PB = PITCHER BARREL SAMPLE
Nx = Nx-DOUBBLE BARREL SAMPLE

SPT = Standard Penetration Test
LL = Liquid Limit
PL = Plastic Limit
PI = Plasticity Index

FIGURE B-10

SUMMARY OF LABORATORY TEST RESULTS

GEOTEST ENGINEERING, INC.

PROJECT NAME: Surface Water Transmission Program – 96] Clinton Drive Condition Assessment; WBS No. S-000901-0008-3 Houston, Texas

PROJECT NUMBER: 1140195201

BORING NO.	SAMPLE No.	SAMPLE Depth (ft.) Top	SAMPLE Depth (ft.) Bottom	SAMPLE Type	SPT (blows/ft.)	WATER CONTENT (%)	DRY DENSITY (pcf)	ATTERBERG LIMITS LL	ATTERBERG LIMITS PL	ATTERBERG LIMITS PI	PASSING NO. 200 SIEVE (%)	UNCONFINED COMPRESSION TEST Shear Strength (tsf)	TRIAXIAL COMPRESSION TEST (U-U) Shear Strength (tsf)	TRIAXIAL COMPRESSION TEST (U-U) Conf. Press. (tsf)	TORVANE Shear Strength (tsf)	POCKET PENE-TROMETER Shear Strength (tsf)	TYPE OF MATERIAL
B-12	2	1.3	2.0	UD		22									1.13	1.00	Fat Clay
	3	2.0	4.0	UD		18									1.00	0.88	Fat Clay
	4	4.0	5.0	UD		28									0.90	0.75	Fat Clay
	5	5.0	6.0	UD		23	101	63	24	39	83		0.76	0.43	1.13	0.75	Fat Clay
	6	6.0	8.0	UD		20									1.13	1.25	Fat Clay
	7	8.0	10.0	UD		17									1.50	1.75	Lean Clay
	8	10.0	12.0	UD		22	105	61	24	37	94		0.81	0.86	1.25	1.00	Fat Clay
	9	12.0	14.0	UD		19									1.50	1.25	Fat Clay
	10	14.0	15.0	UD		22									0.70	0.63	Fat Clay

LEGEND:
UD = UNDISTURBED SAMPLE, EXTRUDED IN FIELD
SS = SPLIT SPOON SAMPLE
AG = AUGER CUTTINGS
PB = PITCHER BARREL SAMPLE
Nx = Nx-DOUBBLE BARREL SAMPLE

SPT = Standard Penetration Test
LL = Liquid Limit
PL = Plastic Limit
PI = Plasticity Index

FIGURE B-11

SUMMARY OF LABORATORY TEST RESULTS

GEOTEST ENGINEERING, INC.

PROJECT NAME: Surface Water Transmission Program – 96] Clinton Drive Condition Assessment; WBS No. S-000901-0008-3 Houston, Texas

PROJECT NUMBER: 1140195201

BORING NO.	SAMPLE No.	SAMPLE Depth (ft.) Top	SAMPLE Depth (ft.) Bottom	SAMPLE Type	SPT (blows/ft.)	WATER CONTENT (%)	DRY DENSITY (pcf)	ATTERBERG LIMITS LL	ATTERBERG LIMITS PL	ATTERBERG LIMITS PI	PASSING NO. 200 SIEVE (%)	UNCONFINED COMPRESSION TEST Shear Strength (tsf)	TRIAXIAL COMPRESSION TEST (U-U) Shear Strength (tsf)	TRIAXIAL COMPRESSION TEST (U-U) Conf. Press. (tsf)	TORVANE Shear Strength (tsf)	POCKET PENE-TROMETER Shear Strength (tsf)	TYPE OF MATERIAL
B-13	2	2.2	4.0	UD		28									0.80	0.75	Fat Clay
	3	4.0	6.0	UD		28									0.75	0.75	Fat Clay
	4	6.0	8.0	UD		26	102	67	25	42	93		0.68	0.58	0.75	0.88	Fat Clay
	5	8.0	10.0	UD		23									1.50	1.38	Fat Clay
	6	10.0	12.0	UD		21									1.50	1.50	Fat Clay
	7	12.0	14.0	UD		22	105	57	23	34	92		0.93	1.01	1.50	1.50	Fat Clay
	8	14.0	15.0	UD		21									1.75	2.00	Fat Clay

LEGEND:
UD = UNDISTURBED SAMPLE, EXTRUDED IN FIELD
SS = SPLIT SPOON SAMPLE
AG = AUGER CUTTINGS
PB = PITCHER BARREL SAMPLE
Nx = Nx-DOUBBLE BARREL SAMPLE

SPT = Standard Penetration Test
LL = Liquid Limit
PL = Plastic Limit
PI = Plasticity Index

FIGURE B-12

Job No. 1140195201

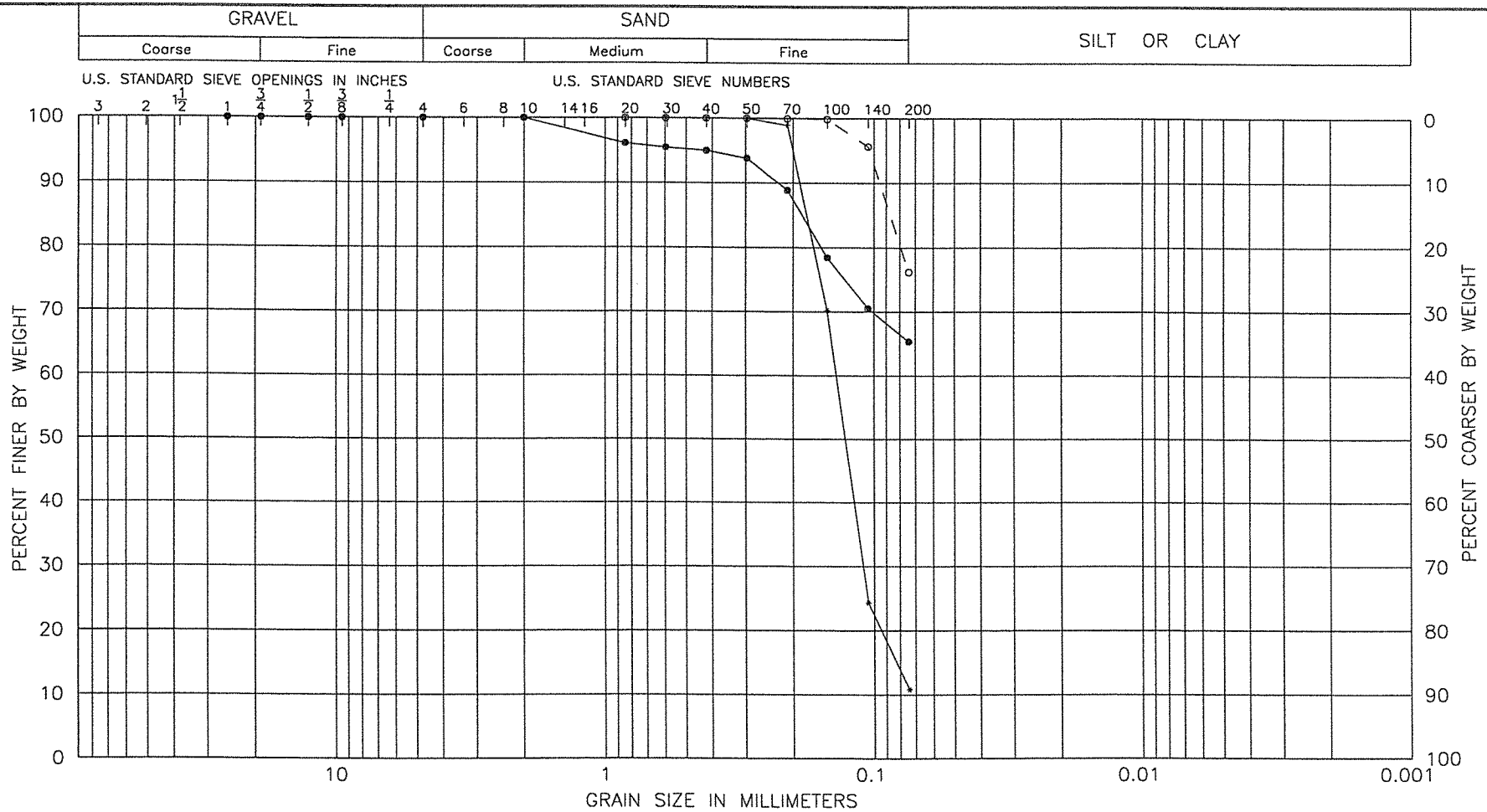

LEGEND	BORING NO.	SAMPLE NO.	DEPTH FT.	SAMPLE DESCRIPTION
●●●●●	B-4B	S-5	8.5-10.0	Dark gray sandy lean clay
○○○○○	B-5B	S-6	10.0-12.0	Brown silt w/sand
××××××	B-9A	S-9	12.5-14.0	Gray fine sand w/silt

GRAIN SIZE DISTRIBUTION CURVES

Geotest Engineering, Inc.

FIGURE B-13