STORM WATER POLLUTION PREVENTION PLAN (SWPPP)

FOR
WESTWAY WASTEWATER TREATMENT PLANT IMPROVEMENTS
WBS No. R-000265-0132-4

Prepared For:

CITY OF HOUSTON
PUBLIC WORKS AND ENGINEERING DEPARTMENT

STATE OF TEXAS
VINCENT N. JACOB
98325
LICENSED
PROFESSIONAL ENGINEER

Prepared by:

iSani CONSULTANTS
engineers | construction managers
3143 Yellowstone Blvd.,
Houston, Texas 77054
Ph: (713) 747-2399

SWPPP Report Prepared in July **2016**

TABLE OF CONTENTS

1. REGULATIONS 2
2. PROJECT INFORMATION 3
3. SITE DESCRIPTION 4
   A. Description of the Construction Activity 4
   B. Sequence of Major Activities 4
   C. Estimated Total Site Area and Disturbed Area 4
   D. Runoff Coefficient 4
   E. Name of Receiving Water and Extent of Wetlands 4
   F. Soils 4
4. CONTROLS 4
   A. Erosion and Sediment Controls 5
   B. Storm Water Management 6
   C. Other Controls 6
   D. Off Site Vehicle Tracking 7
   E. Demonstration of Compliance with State or Local Plans 7
   F. Approved State or Local Plans 7
5. MAINTENANCE 8
6. INSPECTIONS 9
7. NON-STORM WATER DISCHARGES 10
8. TECHNICAL SPECIFICATIONS 13

EXHIBITS

A. VICINITY MAP
B. PROJECT LOCATION MAP

APPENDICIES

A. Items to be Posted at Site
B. Certification Form
C. Inspection and Maintenance Forms
D. SWPPP Drawings
E. TPDES General Permit No. TXR150000 (Issued Feb 19, 2013)

Technical Specifications (Included with Construction Documents)

1. REGULATIONS

Section 405 of the Water Quality Act of 1987 added section 402(p) of the Clean Water Act which requires the Environmental Protection Agency to develop a phased approach to regulating storm water discharges under the National Pollutant Discharge Elimination System (NPDES) program.

On November 16, 1990, EPA published regulations under the NPDES program which defined the term "storm water discharge associated with industrial activity to include storm water discharges from construction activities (including clearing, grading, and excavation activities) that result in the disturbance of five or more acres of total land area, including areas that are part of a larger common plan of development or sale. On September 9, 1992, EPA published final regulations for NPDES General Permits for Storm Water Discharge from Construction Sites, which are currently in effect.

On March 5, 2003, the Texas Pollutant Discharge Elimination System (TPDES) General Permit Number TXR 150000 was issued (the Construction General Permit) and on February 19, 2013 issued a renewal of TPDES General Permit TXR150000. Since this project includes construction activities covering approximately 1.51 acres and less than 5 acres, TPDES permitting for Small Construction Activities applies. A Notice of Intent for this contract follows.

City of Houston has directed Isani Consultants to prepare this Storm Water Pollution Prevention Plan (SW3P) and to assist in the completion of the proper notices under the appropriate TPDES Construction General Permit Number TXR150000 for City of Houston Project Westway Wastewater Treatment Plant Improvements. (WBS No: R-000265-0132-4)

2. PROJECT INFORMATION

The proposed Wesway Wastewater Treatment Treatment Plant Improvements (WBS No: R-000035-006A-3) is located in the Northwest Part of Houston. The facility address is 10273 Genard Road, Houston, 77041 (Key Map Numbers 450 A, District A).

These locations are shown on the Vicinity Map in Exhibit A which also identifies the referenced Key Map location and GIMS Map locations (4960 B) for Plant. The project location is shown on the project vicinity map in Exhibit A and the project limits are shown on the project location map in Exhibit B.

Operator
City of Houston
Department of Public Works and Engineering
611 Walker, 15th Floor
Houston, Texas 77002

Contractor Name and Address : TBD

Subcontractor Name and Address Landscape (Seeding)
TBD

Construction Waste Disposal and Hazardous Waste Disposal
TBD

3. SITE DESCRIPTION

A. Description of the Construction Activity

The project includes design and construction of a new clarifier approximately 65 feet in diametr, scum pump station and associated piping. The proposed clarifier is aproximately 18.6 feet high and approximately 10 to 15 feet below grade. The piping includes installation of approximately 400 linear feet of 30-inch diameter sanitary sewer line. The sanitary sewer line will be placed approxitately 13 feet deep. The work also includes site and pavement restoration, tree protection, storm water pollution prevention and traffic control in relation to the construction of the water line.

B. Sequence of Major Activities

The contract duration is 365 calendar days. The specification does not call for a specific sequence of construction activities. Construction sequencing will be determined during construction.

C. Estimated Total Site Area and Disturbed Area

The Construction Zone Area is estimated as: **0.69 Acres**

Total Site Area = **4,27** Acres

D. Runoff Coefficient

The rainfall-runoff coefficient for this project is 0.75 for Wastewater Treatment Plant Area based on City of Houston Design requirements.

E. Name of Receiving Water and Extent of Wetlands

The storm waters from Project area outfalls to HCFCD Unit No. E115-00-00 Brickhouse Gully). There is no wetlands have been identified in the project area.

F. Soils

GEOTEST Engineering, Inc. Geotechnical investigations and submitted a draft report in September 4 to LJA Engineering, Inc. Based on the soil stratigraphy reveled from borings GB-1 through GB-3, the subgrade soils for supporting the bottom of the Clarifier foundation at depths ranging from 11 to 17 feet (el. 87.91 to 81.62 feet) consists of stiff to very stiff sandy lean clay and or medium dense silty sand. Based on the soil stratigraphy reveled from borings GB-3, the foundation for pump station may be supported on a mat foundation placed at the depth of 3 feet below grade into stiff sandy lean clay.

CONTROLS

G. Erosion and Sediment Controls

i. Major erosion and sediment controls are shown on the Drawings included with Construction Documents.
   (1) The onsite staging, parking areas and construction exits will be stabilized using coarse aggregate. A filter fabric fence will surround the staging and parking area.
   (2) In completed pavement sections, all disturbed soils in the right-of-way will be stabilized with seeding, hydromulch, or block sod to minimize erosion and sediment as soon as possible.
   (3) At the end of water line work, all disturbed areas that are not paved will be seeded or hydro-mulched or sodded as required by Section 01740 (Site Restoration) of the Contract Specifications.

ii. Structural Practices
   (1) Inlet protection barriers will be placed at the inlets as shown on the construction drawings to remove sediments from runoff.
   (2) Filter Fabric fencing will be placed between the back of the curb and the excavated pit to capture sediment from the disturbed area.
   (3) A reinforced filter fabric fence will be placed in the ditches downstream of the work areas.
   (4) A vehicle/equipment wash area stabilized with coarse aggregate will be established near the staging/parking area for trucks and equipment leaving the site.

iii. Sequence of Major Erosion and Sediment Control Activities
The erosion and sediment control activities for the project will occur in phases. The staging, parking and construction exits will be constructed at the first phase. All construction vehicles that travel over the disturbed areas will be washed at these construction exits prior to leaving the site. The wash-down water will drain to a sediment trap where the sediments will be separated from the clean water. The sediments will be disposed and the clean water will drain to the existing storm sewer system. During the excavation phase of the project, dump trucks that are to be used for hauling away the excavated material will remain parked on the existing pavement. Any loose excavated material that falls on the pavement will be swept back into the excavated area. During a rainfall event, the excavated area will serve as a sediment trap and will prevent disturbed soils from being carried to the storm inlets. All materials and supply trucks shall remain parked on existing pavement during their unloading. These steps will minimize the number of vehicles that need to be washed

down. Once the excavated area is repaved, backfilled and re-graded, the disturbed soils will be planted with solid sod, seeded or hydro-mulched. Lastly, the construction exit, staging and parking areas will be removed and stabilized.

Completion of the project is expected within 365 calendar days.

H. Storm Water Management

i. Due to site restrictions, detention, retention and infiltration systems for storm water treatment are not attainable. The re-vegetated landscaping strips will be used to the extent practicable for flow attenuation purposes.
ii. Storm water from the roadway will discharge into the open ditch and/or curb and gutter system, and then drain into an existing storm sewer. No velocity dissipation devices are needed.

I. Other Controls

i. Waste Disposal - Waste Materials

All waste materials will be collected and stored in securely lidded metal dumpsters rented from the _____ which is a licensed solid waste management company in Harris County. The dumpsters will meet all local and State solid waste management regulations. All trash and construction debris from the site will be deposited in the dumpsters. The trash and debris will be hauled to an approved landfill. No construction waste material will be buried on site. All personnel will be instructed regarding the correct procedure for waste disposal. Notices stating these practices will be posted in the office trailer and the individual who manages the day-to-day site operations will be responsible for seeing that these procedures are followed.

ii. Waste Disposal - Hazardous Waste

Hazardous waste is expected to be generated or encountered in the vicinity. In the event that hazardous waste is encountered all hazardous waste materials will be disposed of in the manner specified by local or State regulation or by the manufacturer, by _____company, a licensed hazardous waste management contractor. The individual, who manages day-to-day site operations, will be responsible for seeing that these practices are followed.

iii. Waste Disposal - Sanitary Waste

All sanitary waste will be regularly collected from the portable units by the _____company, a licensed sanitary waste management contractor.

iSani CONSULTANTS
engineers | construction managers

J. Off Site Vehicle Tracking

i. A stabilized construction exit will be provided to help reduce vehicle tracking of sediments.

ii. A stabilized vehicle/equipment washing area will be provided to help remove dirt and loose material from vehicles and equipment. Wash water will be directed to sediment traps, with eventual discharge into storm sewer system.

iii. The paved streets adjacent to the site entrance will be cleaned daily, as necessary, to remove any excess mud, dirt, or rock tracked from the site.

K. Demonstration of Compliance with State or Local Plans

The proposed project will be in compliance with applicable State and local waste disposal and sanitary sewer regulations.

L. Approved State or Local Plans

There is no approved State or local site plan requirement for storm water management or erosion and sediment control.

4. MAINTENANCE

A. The following is a list of erosion and sediment controls to be used on this project.

i. Stabilization Practices

(1) Stabilized construction exits
(2) Stabilized onsite staging and parking areas
(3) Hydromulch or block sod on disturbed soil as soon as possible
(4) Hydromulch or block sod on all disturbed areas that are not paved, upon completion of paving work

ii. Structural Practices

(1) Inlet protection barriers
(2) Filter fabric fences
(3) Stabilized vehicle/equipment wash area, with wash water directed to a sediment trap, and then released into a diversion swale
(4) Immediate removal of trench excavation spoils or backfilling in a continuous operation
(5) Storm sewers, gutters and storm inlet sediment traps for the Stage I storm sewer inlets

iii. To maintain the above practices, the following will have to be done:

(1) Maintenance and repairs will be conducted within 24 hours of inspection report (see Section 6 below).

(2) Sediment will be removed from behind the reinforced filter fabric barriers, or other device when it becomes about 1/3 the height of the device.

(3) Sediment will be removed from the sediment trap when storage capacity has been approximately 50% filled.

(4) Any sediment in the storm sewer inlets will be removed.

(5) All temporary controls will be removed after the disturbed areas have been stabilized.

5. INSPECTIONS

A. A qualified person will be delegated authority per the regulations **(TPDES General Permit TXR150000,** *dated February 19, 2013*). Each contractor will designate a qualified person or persons to perform the following inspections:

i. Disturbed areas and areas used for storage of materials that are exposed to precipitation will be inspected for evidence of, or the potential for, pollutants entering the drainage system.

ii. Erosion and sediment control measures identified in the plan will be observed to ensure that they are operating correctly.

iii. Where discharge locations or points are accessible, they will be inspected to ascertain whether erosion control measures are effective in preventing significant impacts to receiving waters.

iv. Locations where vehicles enter or exit the site will be inspected for evidence of offsite sediment tracking.

v. The vehicle/equipment wash area will be inspected for loss of aggregate, proper drainage, and proper maintenance of sediment trap and washing equipment.

vi. The inspection will be conducted by the responsible person at least once every 14- calendar days and within 24 hours after a storm event of 0.5 inch or greater.

vii. After a portion of the site is finally stabilized, inspection will be conducted at least once every month until the entire site is stabilized.

B. Based on the results of the inspection, the site description (Section 3) and control measures (Section 4) of this SWPPP will be revised as appropriate, but in no case later than 7 calendar days following the inspection.

C. A report summarizing the scope of the inspection, name(s) and qualifications of personnel making the inspection, the date(s) of the inspection, major observations relating to the implementation of the storm water pollution prevention plan, and actions taken in accordance with item "B" above will be made and retained as part of the storm water pollution prevention plan for at least three years from the date that the site is finally stabilized. The report will be signed in accordance with Section 01410 (TPDES Requirements (with Attachments)) of the Contract Specifications.

Copies of the forms to be used for the Inspection and Maintenance reports are included in Appendix C of this plan.

6. NON-STORM WATER DISCHARGES

Inventory for Pollution Prevention Plan

The following substances listed below are expected to be present on site during construction:

Concrete
Hydrated lime
Motor fuel
Motor oil and other lubricants
Fertilizers
Detergents
Adhesives
Waterproofing materials
Wood
Steel
Paint
Solvents
Plastic pipe
Sand, clean or Portland cement stabilized
Crushed aggregates, limestone, rock
Benzene

A. Spill Prevention

i. The following are the material management practices that will be used to reduce the risk of spills or other accidental exposure of materials and substances to storm water runoff.

B. Good Housekeeping

i. The following are good housekeeping practices to be followed on site during the construction project.

(1) An effort will be made to store only enough product required to do the job.
(2) All materials stored onsite will be stored in a neat, orderly *manner* in their appropriate container and, if possible, under a roof or other enclosure.
(3) Products will be kept in their original containers with the original manufacturer's label.
(4) Substances will not be mixed with one another unless recommended by the manufacturer.
(5) Whenever possible, all of a product will be used up before disposing of the container.
(6) Manufacturers' recommendations for proper use and disposal will be followed.

(7) The site superintendent will inspect daily to ensure proper use and disposal of materials onsite.

C. *Hazardous Products*

These practices will be used to reduce the risks associated with hazardous materials, if hazardous materials are used.

i. Keep products in original containers unless they are not re-sealable.
ii. Original labels and material safety data will be retained.
iii. If surplus product must be disposed of, it will be done according to manufacturers' recommended methods or according to State and local regulations.

D. *Product Specific Practices*

The produce specific practices to be followed are listed in Table I.

E. *Spill Prevention Practices*

The spill prevention practices to be followed are listed in Table I.

TABLE I

Product Specific Practices

The following product specific practices will be followed onsite:

Petroleum Products: All onsite vehicles will be monitored for leaks and receive regular preventive maintenance to reduce the chance of leakage. Petroleum products will be stored in tightly sealed containers that are clearly labeled. Any asphalt substances used onsite will be applied according to the manufacturer's recommendations.

Fertilizers: Fertilizers used will be applied only in the minimum amounts recommended by the manufacturer. Once applied, fertilizer will be worked in the soil to limit exposure to storm water. Storage will be in a covered shed. The contents of any partially used bags of fertilizer will be transferred to a sealable plastic bid to avoid spills.

Paints: All containers will be tightly sealed and stored when not required for use. Excess paint will not be discharged to the storm sewer system but will be properly disposed of according to manufacturers' instructions or State and local regulations.

Concrete Trucks: Concrete trucks will not be allowed to wash out or discharge surplus concrete or drum wash water on the site.

Spill Prevention Practices

In addition to the good housekeeping and material management practices discussed in the previous sections of this plan, the following practices will be followed for spill prevention and cleanup:

Manufacturers' recommended methods for spill cleanup will be clearly posted and site personnel will be made aware of the procedures and the location of the information and cleanup supplies.

Materials and equipment necessary for spill cleanup will be kept in the material storage area onsite. Equipment and materials will include but not be limited to brooms, dustpans, mops, rags, gloves, goggles, kitty liner, sand, sawdust, and plastic and metal trash containers specifically for this purpose.

All spills will be cleaned up immediately after discovery.

The spill area will be kept well ventilated and personnel will wear appropriate protective clothing to prevent injury from contact with a hazardous substance,

Spills of toxic or hazardous material will be reported to the appropriate State or local government agency, regardless of the size.

The spill prevention plan will be adjusted to include measures to prevent this type of spill from reoccurring and how to clean up the spill if there is another one. A description of the spill, what caused it, and the cleanup measures will also be included.

Mr. / Ms. _____, the site superintendent responsible for the day-to-day site operations, will be the spill prevention and cleanup coordinator. He will designate at least three other site personnel who will receive spill prevention and cleanup training. These individuals will each become responsible for a particular phase of prevention and cleanup. The names of responsible spill personnel will be posted in the material storage area and in the office trailer onsite.

7. TECHNICAL SPECIFICATIONS

This section is not required by the General Permit, but is included for information purposes.

Control measures are listed in the *Storm Water Management Handbook for Construction Activities* prepared by Harris County/Harris County Flood Control District and the City of Houston, 2006 Edition. The specifications included in this project are given below:

ITEMS SPECIFIED

Specifications

01410 TPDES Requirements (with attachments)
01570 Storm Water Pollution Control
01575 Stabilized Construction Exit
01576 Waste Material Disposal
01578 Control of Ground Water
02921 Hydromulch Seeding
02922 Sodding

Standard Abbreviations

FF Filter Fabric Fence
RFB Reinforced Filter Fabric Barrier
IPB I Curb Inlet Protection Barrier – Stage I
IPB II Curb Inlet Protection Barrier – Stage II & Existing
SC Stabilized Construction Exit
FD II Filter Dam – Type-II

Drawing Sheet's Name

Storm Water Pollution Prevention Plan (Sheet 1 of 2)
Storm Water Pollution Prevention Plan Details (Sheet 2 of 2)

Exhibits

VICINITY MAP

PROJECT LOCATION MAP

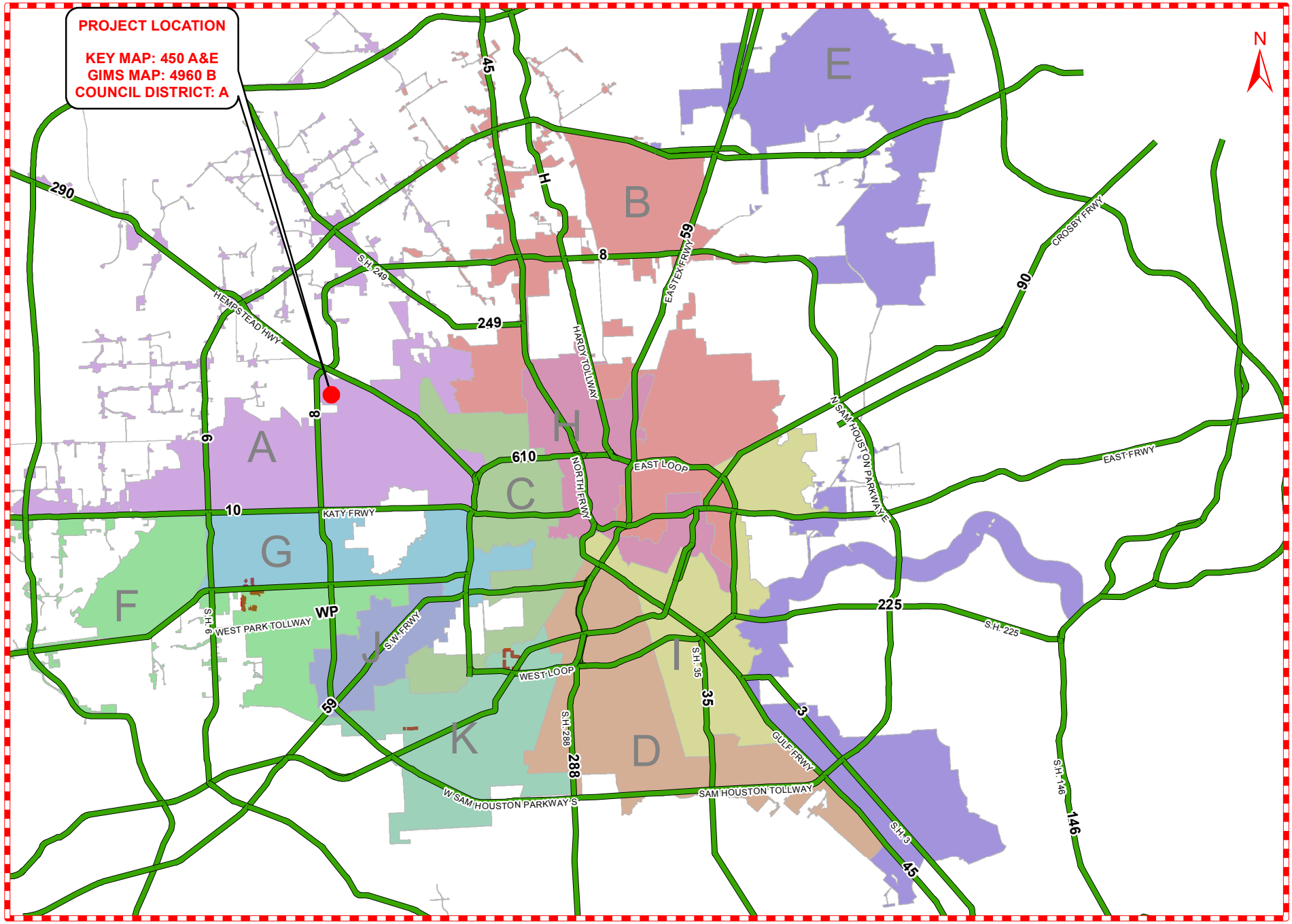

iSani CONSULTANTS
engineers | construction managers

WESTWAY WASTEWATER TREATMENT PLANT IMPROVEMENTS
WBS NO: R-000265-0132-4

EXHIBIT A
VICINITY MAP

10/27/2015

0 15,000 30,000
Feet

iSani CONSULTANTS
engineers | construction managers

WESTWAY WASTEWATER TREATMENT PLANT IMPROVEMENTS
WBS NO: R-000265-0132-4

EXHIBIT B
LOCATION MAP

10/27/2015

0 250 500
Feet

Appendix A

ITEMS TO BE POSTED AT SITE

SMALL CONSTRUCTION SITE NOTICE

FOR THE
Texas Commission on Environmental Quality (TCEQ)
Storm Water Program

TPDES GENERAL PERMIT TXR150000

The following information is posted in compliance with **Part II.E.2.** of the TCEQ General Permit Number TXR150000 for discharges of storm water runoff from small construction sites. Additional information regarding the TCEQ storm water permit program may be found on the internet at:

http://www.tceq.state.tx.us/nav/permits/wq_construction.html

Operator Name:	
Contact Name and Phone Number:	
Project Description: *Physical address or description of the site's location, estimated start date and projected end date, or date that disturbed soils will be stabilized*	
Location of Storm Water Pollution Prevention Plan:	

For Small Construction Activities Authorized Under Part II.E.2. (Obtaining Authorization to Discharge) the following certification must be completed:

I _____ (Typed or Printed Name Person Completing This Certification) certify under penalty of law that I have read and understand the eligibility requirements for claiming an authorization under Part II.E.2. of TPDES General Permit TXR150000 and agree to comply with the terms of this permit. A storm water pollution prevention plan has been developed and will be implemented prior to construction, according to permit requirements. A copy of this signed notice is supplied to the operator of the MS4 if discharges enter an MS4. I am aware there are significant penalties for providing false information or for conducting unauthorized discharges, including the possibility of fine and imprisonment for knowing violations.

Signature and Title_____ Date _____

_____*Date Notice Removed*
____*MS4 operator notified per Part II.F.3.*

(NOTE: COMPLETE PRIOR TO CONSTRUCTION)

POST AT PROJECT SITE
(Page 1 of 2)

To be filled in upon receiving the NPDES Permit Numbers from the EPA:
NPDES PERMIT NUMBER for Owner (City of Houston): _____
NPDES PERMIT NUMBER for Operator (Contractor): _____

PROJECT NAME AND LOCATION:

Project Name: WESTWAY WASTEWATER TREATMENT PLAN IMPROVEMENTS
WBS No: R-000265-0132-4

Location: 10273 Genard Road, Houston, TX 77041

OWNER NAME AND ADDRESS (SWPPP Location):
CITY OF HOUSTON
PUBLIC WORKS AND ENGINEERING
611 WALKER, 17TH FLOOR
Houston, Texas 77002

CONTRACTOR NAMES AND ADDRESSES:

_____
Company
_____
Address
_____
Phone
_____
Contact Person

Subcontractors:

_____

Company

Address

Phone

Contact Person

Subcontractors:

_____

Company

Address

Phone

Contact Person

(NOTE: POST AT PROJECT SITE)

PROJECT DESCRIPTION:

THE REPLACEMENT OF PUMP, PIPING AND RELATED APPURTENANCES.
THE PREFERRED CONSTRUCTION METHOD IS OPEN CUT.

SCOPE OF WORK INCLUDES EXCAVATION, REPLACEMENT OF ASPHALT PAVEMENT, SIDEWALKS, AND DRIVEWAYS WHERE NECESSARY.

_____

_____

_____

Appendix B

CERTIFICATION FORM

(NOTE: COMPLETE PRIOR TO CONSTRUCTION)

OWNER (CITY OF HOUSTON) CERTIFICATION

Project Name and Location:

Project Name: WESTWAY WASTEWATER TREATMENT PLAN IMPROVEMENTS
WBS No: R-000265-0132-4

Location: 10273 Genard Road, Houston, Texas, 77041

I certify under penalty of law that this document and all attachments were prepared under my direction or supervision in accordance with a system designed to assure that qualified personnel properly gathered and evaluated the information submitted. Based on my inquiry of that person or persons who manage the system, or those persons directly responsible for gathering the information, the information submitted is, to the best of my knowledge and belief, true, accurate, and complete. I am aware that there are significant penalties for submitting false information, including the possibility of fine and imprisonment for knowing violations.

Signed: _____
City Engineer

Date: _____

CITY OF HOUSTON
PUBLIC WORKS AND ENGINEERING DEPARTMENT
611 WALKER, 17TH FLOOR
Houston, Texas 77002

(NOTE: COMPLETE PRIOR TO CONSTRUCTION)

OPERATOR (GENERAL CONTRACTOR) CERTIFICATION

Project Name: WESTWAY WASTEWATER TREATMENT PLAN IMPROVEMENTS
WBS No: R-000265-0132-4

Location: 10273 Genard Road, Houston, Texas, 77041

I certify under penalty of law that this document and all attachments were prepared under my direction or supervision in accordance with a system designed to assure that qualified personnel properly gathered and evaluated the information submitted. Based on my inquiry of that person or persons who manage the system, or those persons directly responsible for gathering the information, the information submitted is, to the best of my knowledge and belief, true, accurate, and complete. I am aware that there are significant penalties for submitting false information, including the possibility of fine and imprisonment for knowing violations.

General Contractor: Responsible For:

_____
Company

_____
Name

_____
Title

_____
Signature

_____
Date

(NOTE: COMPLETE PRIOR TO CONSTRUCTION)
SUBCONTRACTOR CERTIFICATION

Project Name and Location:

Project Name: WESTWAY WASTEWATER TREATMENT PLAN IMPROVEMENTS
WBS No: R-000265-0132-4

Location: 10273 Genard Road, Houston, Texas, 77041

I certify under penalty of law that I understand the terms and conditions of the General National Pollutant Discharge Elimination System (NPDES) Permit that authorizes the storm water discharges associated with the industrial activity from the construction site identified as part of this certification.

Subcontractor: Responsible For:

_____
Company

_____
Name

_____
Title

_____
Signature

_____
Date

Subcontractor: Responsible For:

_____
Company

_____
Name

_____
Title

_____
Signature

_____
Date

(NOTE: COMPLETE PRIOR TO CONSTRUCTION)

CONTRACTOR'S SWPPP INSPECTOR CERTIFICATION

Project Name and Location:

Project Name: WESTWAY WASTEWATER TREATMENT PLAN IMPROVEMENTS
WBS No: R-000265-0132-4

Location: 10273 Genard Road, Houston, Texas, 77041

I certify under penalty of law that this document and all attachments were prepared under my direction of supervision in accordance with a system designed to assure that qualified personnel property gathered and evaluated the information submitted. Based on my inquiry of the person or persons who manage the system, or those persons directly responsible for gathering the information, the information submitted is, to the best of my knowledge and belief, true, accurate, and complete. I am aware that there are significant penalties for submitting false information, including the possibility of fine and imprisonment for knowing violations.

General Contractor's SWPPP Inspector:

_____
Company

_____
Name

_____
Title

_____
Signature

_____
Date

(This certification shall be signed by the General Contractor's SWPPP inspector and attached to each Inspection and Maintenance Report.)

PREPARER'S CERTIFICATION FOR THE

STORM WATER POLLUTION PREVENTION PLAN

Project Name and Location:

Project Name: WESTWAY WASTEWATER TREATMENT PLAN IMPROVEMENTS
WBS No: R-000265-0132-4

Location: 10273 Genard Road, Houston, Texas, 77041

I certify under penalty of law that this document and all attachments were prepared under my direction of supervision in accordance with a system designed to assure that qualified personnel property gathered and evaluated the information submitted. Based on my inquiry of the person or persons who manage the system, or those persons directly responsible for gathering the information, the information submitted is, to the best of my knowledge and belief, true, accurate, and complete. I am aware that there are significant penalties for submitting false information, including the possibility of fine and imprisonment for knowing violations.

Storm Water Pollution Prevention Plan prepared by:

ISANI CONSULTANTS, L.P.
Company

Vincent N. Jacob, P.E.
Name

Managing Engineer
Title

Vincent N. Jacob
Signature

July 13, 2016
Date

Date Prepared: July, 2016

Latest Revision: _____

Appendix C

INSPECTION AND

MAINTENANCE FORMS

ATTACHMENT 4

CONTRACTOR'S / SUBCONTRACTOR'S

CERTIFICATION FOR TPDES PERMITTING

I certify under penalty of law that I understand the terms and conditions of TPDES General Permit No. TXR150000 and the Storm Water Pollution Prevention Plan for the construction site identified as part of this certification.

Signature: _____

Name: (printed or typed) _____

Title: _____

Company: _____

Address: _____

Date: _____

Signature: _____

Name: (printed or typed) _____

Title: _____

Company: _____

Address: _____

Date: _____

Signature: _____

Name: (printed or typed) _____

Title: _____

Company: _____

Address: _____

Date: _____

ATTACHMENT 5

EPA NPDES Construction Inspection Form

The following inspection is being performed in compliance with Part IV.D.4. of the NPDES Region 6 Storm Water Construction General Permit [63 Fed. Reg. 36502] and being retained in accordance with Part V of the Permit. Qualified personnel (provided by the permittee or cooperatively by multiple permittees) shall inspect disturbed areas of the construction site that have not been finally stabilized, areas used for storage of materials that are exposed to precipitation, placement and effectiveness of structural control measures, and locations where vehicles enter or exit the site. Inspections shall be performed at least once every 14 days and within 24 hours of the end of a storm event of 0.5 inches or greater. Where sites have been temporarily stabilized, runoff is unlikely due to winter conditions, or during seasonal arid periods in arid areas (0-10 inches of rainfall annually) and semi-arid areas (10-20 inches annually) such inspections shall be conducted at least once every month. This form is primarily intended for use with construction projects in Texas and New Mexico. Permittees on Indian Country lands in Oklahoma, Louisiana and Arkansas and some oil and gas facilities in Oklahoma may use this form if they are eligible for this permit. Other facilities need to check with their NPDES authority before using this form.

If you do not know your NPDES Permit Number, contact the NOI Processing Center at (301)495-4145. This form was prepared as an example and it is not a required form for use with the permit. Alternative forms may be used if they contain all of the required information as set forth in the permit. This form and additional information regarding the NPDES Region 6 storm water program may be found on the Internet at http://www.epa.gov/region6/sw/. Any person with a complaint about the operation of this facility in regards to this permit should contact EPA Region 6 at (214)665-7112.

Permit Number(s) covered by this inspection (e.g. owners, developers, general contractor, builders)	
Signature and Certification in accordance with Part VI.G of the permit:	I certify under penalty of law that this document and all attachments were prepared under my direction or supervision in accordance with a system designed to assure that qualified personnel properly gathered and evaluated the information submitted. Based on my inquiry of the person or persons who manage the system, or those persons directly responsible for gathering the information, the information submitted is, to the best of my knowledge and belief, true, accurate, and complete. I am aware that there are significant penalties for submitting false information, including the possibility of fine and imprisonment for knowing violations. Signature_____Date_____
Date of Inspection	
Inspector Name	
Is there a copy of the permit language with the SWPPP?	❒ YES ❒ NO
Is the inspector qualified and are the qualifications documented in the SWPPP?	❒ YES ❒ NO
Is an NPDES storm water construction sign posted at the entrance for all permittees?	❒ YES ❒ NO

You may want to use EPA Region 6 construction checklist to assure components of the SWPPP are complete. This form, the construction sign, and the checklist are available on the Region 6 NPDES Storm Water Forms and Documents web page which may be found on the internet at http://www.epa.gov/earth1r6/6en/w/formsw.htm. In addition to the checklist, you should provide a narrative (see next page) on the existing Best Management Practices and Structural Controls found during each inspection. Any problems identified in an inspection should be corrected within 7 days. The inspection should cover all components of the SWPPP and all potential pollutants. While eroded soil is the primary pollutant of concern, do not forget to inspect for other pollutant sources such as fuel tanks, paints, solvents, stabilization materials, concrete hardner, batch plants, and construction debris. The inspector will need to update the SWPPP to reflect findings of the inspection. The site map should be updated after an inspection to show controls that have been added or removed, to ensure the site map is kept current in accordance with Part IV.C. of the permit.

Revision 4, March 1, 2000

Appendix D

SWPPP DRAWINGS

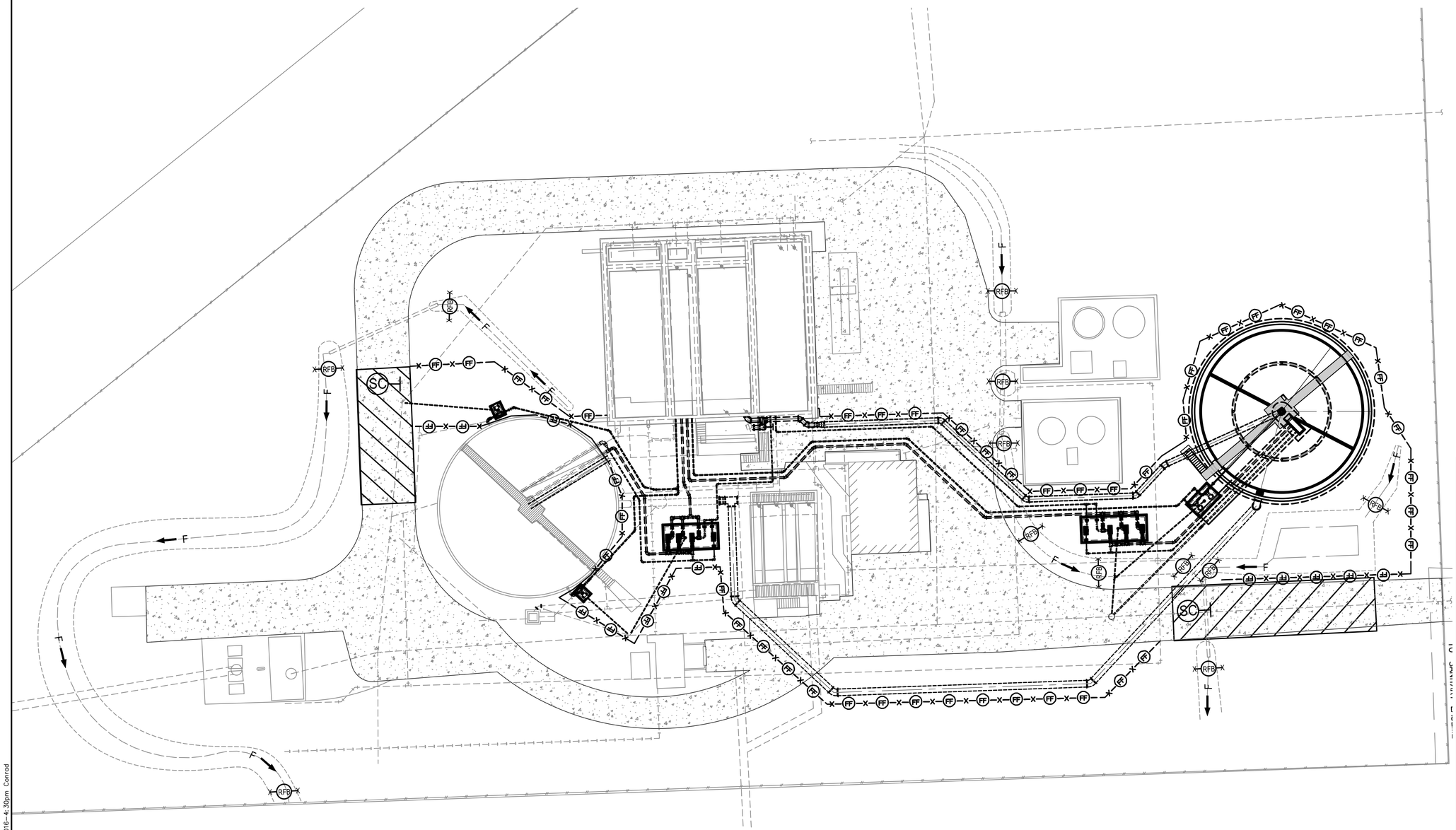

LEGEND

- FF — FILTER FABRIC BARRIER
- RFB — REINFORCED FILTER FABRIC BARRIER
- SC — STABILIZED CONSTRUCTION ACCESS
- F — FLOW DIRECTION

ISSUE	DATE	DESCRIPTION

LJA Engineering, Inc.
2929 Briarpark Drive
Suite 600
Houston, Texas 77042
Phone 713.953.5200
Fax 713.953.5026
FRN - F-1386

iSani CONSULTANTS
3143 YELLOWSTONE BLVD
HOUSTON, TX 77054
TEL: (713) 747-2399 FAX: (713) 748-3748
TBPE FIRM REGISTRATION # 4575

SURVEYED BY:
AMANI ENG.
FB NO. P-5873

STATE OF TEXAS
VINCENT N. JACOB
98325
LICENSED
PROFESSIONAL ENGINEER
07/13/16

CITY OF HOUSTON

DEPARTMENT OF PUBLIC WORKS AND ENGINEERING

WESTWAY WASTEWATER TREATMENT PLANT IMPROVEMENTS

STORM WATER POLLUTION PREVENTION PLAN

WBS NUMBER	FOR CITY OF HOUSTON USE ONLY
R-000265-0132-4	
SCALE 1"=20'-0"	
CITY OF HOUSTON PM	
GAUHER KHAN, P.E.	
SHEET NO. 17 OF 46	

C-11

WESTWAY WASTEWATER TREATMENT PLANT IMPROVEMENTS – 2005-2014

P:\ACTIVE\15WW17\Working\SWPPP 20160405.dwg Jul 13, 2016-4:30pm Conrad

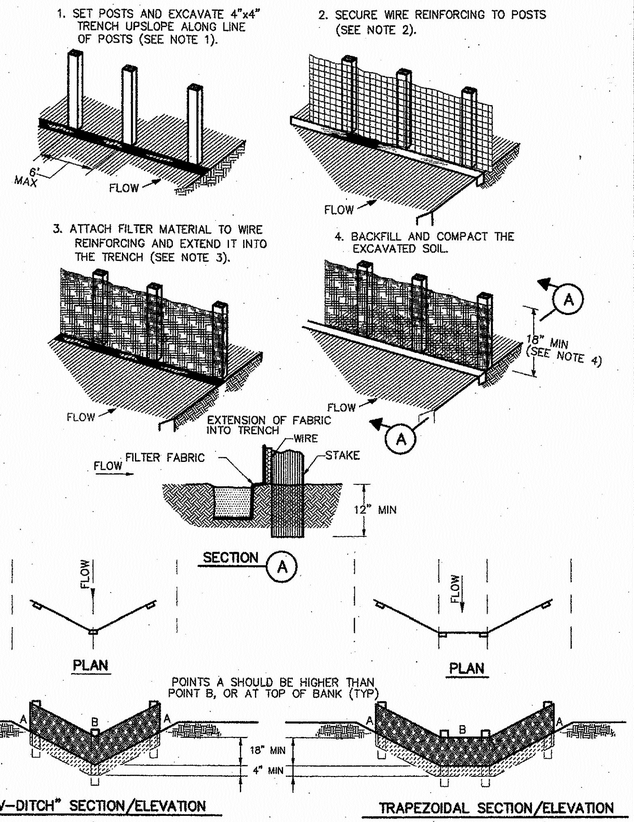

CONSTRUCTION NOTES:

1. SET 2 INCH BY 2 INCH WOODEN STAKES SPACED A MAX OF 6 FEET APART AND EMBEDDED A MIN OF 12 INCHES.
2. WOVEN WIRE REINFORCING TO BE FASTENED SECURELY TO BARRIER POSTS WITH STAPLES.
3. FILTER CLOTH TO BE FASTENED SECURELY TO WOVEN WIRE REINFORCING, WITH TIES SPACED EVERY 24 INCHES AT TOP AND MIDSECTION.
4. MINIMUM HEIGHT OF FILTER SHOULD BE 18 INCHES AND A MAXIMUM OF 36 INCHES ABOVE NATURAL GROUND.
5. WHEN TWO SECTIONS OF FILTER CLOTH ADJOIN EACH OTHER THEY SHALL BE OVERLAPPED 6 INCHES AT THE POSTS, AND FOLDED.
6. SEE COH STANDARD SPECIFICATION FOR FILTER FABRIC BARRIER.

X— (RFB) —X
SYMBOL

REINFORCED FILTER FABRIC BARRIER

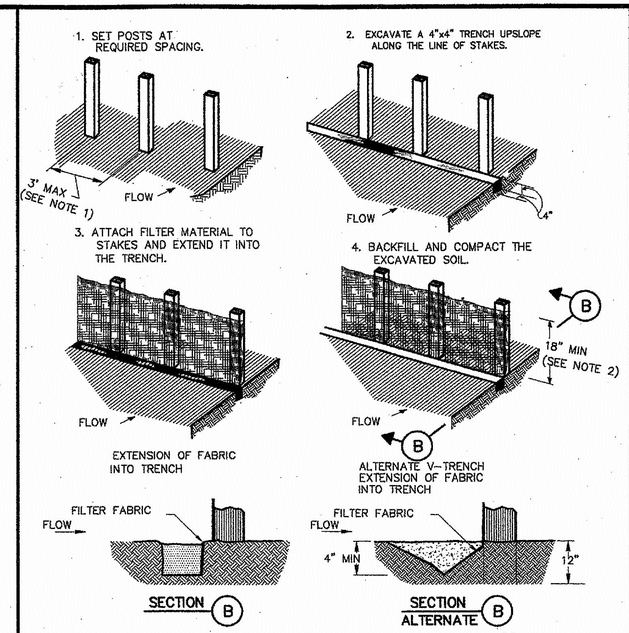

X— (FF) —X
SYMBOL

CONSTRUCTION NOTES:

1. 2 INCH THICK BY 2 INCH WOODEN STAKES TO BE SET AT MAX SPACING OF 3 FEET AND EMBEDDED A MIN OF 8 INCHES. IF PREASSEMBLED BARRIER WITH SUPPORT NETTING IS USED, SPACING OF POST MAY BE INCREASED TO 8 FEET MAX.
2. ATTACH FILTER FABRIC TO WOODEN STAKES. FILTER FABRIC BARRIER SHALL HAVE A MIN HEIGHT OF 18 INCHES AND MAX HEIGHT OF 36 INCHES ABOVE NATURAL GROUND.
3. WHEN TWO SECTIONS OF FILTER CLOTH ADJOIN EACH OTHER THEY SHOULD BE OVERLAPPED 6 INCHES AT THE POSTS, AND FOLDED.
4. SEE COH STANDARD SPECIFICATION FOR FILTER FABRIC BARRIER.

FILTER FABRIC BARRIER

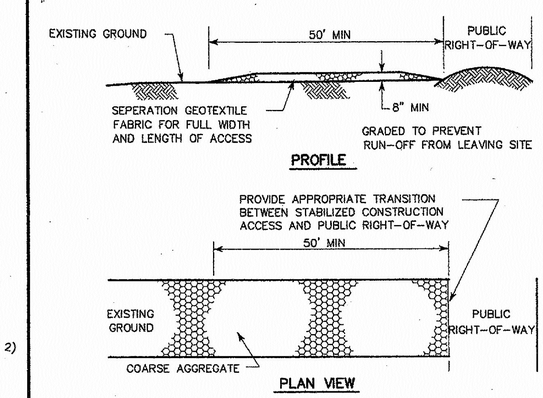

CONSTRUCTION NOTES:

1. LENGTH SHALL BE AS SHOWN ON THE CONSTRUCTION DRAWINGS, BUT NOT LESS THAN 50 FEET.
2. THICKNESS SHALL BE NOT LESS THAN 8 INCHES.
3. WIDTH SHALL BE NOT LESS THAN FULL WIDTH OF ALL POINTS OF INGRESS OR EGRESS.
4. STABILIZATION FOR OTHER AREAS SHALL HAVE THE SAME AGGREGATE THICKNESS AND WIDTH REQUIREMENTS AS THE STABILIZED CONSTRUCTION ACCESS, UNLESS OTHERWISE SHOWN ON THE CONSTRUCTION DRAWINGS.
5. STABILIZED AREA MAY BE WIDENED OR LENGTHENED TO ACCOMODATE A WASHING AREA. AN OUTLET SEDIMENT TRAP MUST BE PROVIDED FOR THE WASHING AREA.
6. COH STANDARD SPECIFICATION FOR STABILIZED CONSTRUCTION ACCESS.
7. STABILIZED CONSTRUCTION ACCESS SHALL BE MAINTAINED FREE OF SEDIMENT FOR THE DURATION OF THE PROJECT.

(SC)
SYMBOL

STABILIZED CONSTRUCTION ACCESS

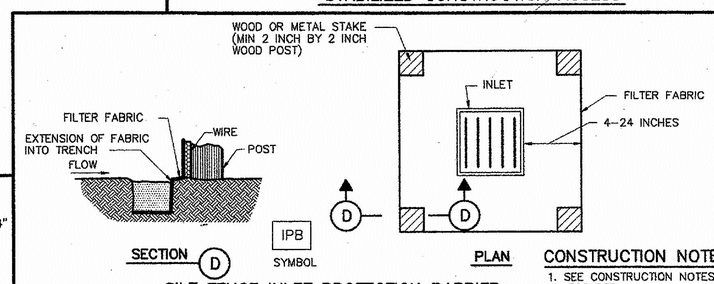

IPB
SYMBOL

SILT FENCE INLET PROTECTION BARRIER

CONSTRUCTION NOTE:

1. SEE CONSTRUCTION NOTES FOR RFB.

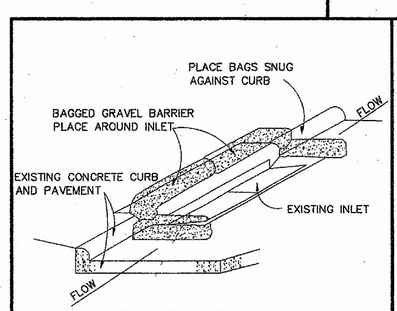

INLET PROTECTION BARRIER

(FOR STAGE II INLETS)
BAGGED GRAVEL BARRIER

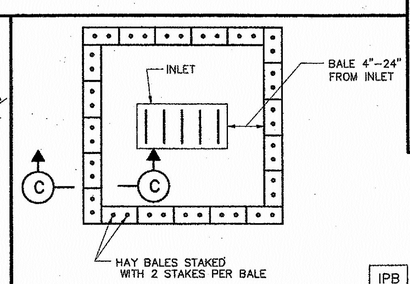

IPB
SYMBOL

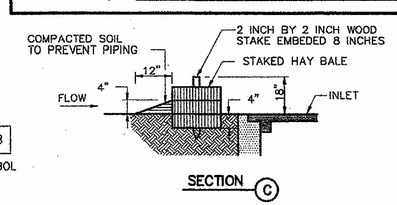

HAY BALE INLET PROTECTION BARRIER

CITY OF HOUSTON
DEPARTMENT OF PUBLIC WORKS AND ENGINEERING

STORM WATER POLLUTION PREVENTION PLAN DETAILS

(NOT TO SCALE)

APPROVED: CITY ENGINEER
APPROVED: DIRECTOR OF PUBLIC WORKS AND ENGINEERING

EFF DATE: JULY-01-2010
DWG NO: 01571-01

ISSUE	DATE	DESCRIPTION

LJA Engineering, Inc.
2929 Briarpark Drive
Suite 600
Houston, Texas 77042
Phone 713.953.5200
Fax 713.953.5026
FRN - F-1386

iSani CONSULTANTS
3143 YELLOWSTONE BLVD
HOUSTON, TX 77054
TEL: (713) 747-2399 FAX: (713) 748-3748
TBPE FIRM REGISTRATION • 4575

SURVEYED BY:
AMANI ENG.
FB NO. P-5873

STATE OF TEXAS — VINCENT N. JACOB — 98325 — LICENSED PROFESSIONAL ENGINEER
07/13/16

CITY OF HOUSTON

DEPARTMENT OF PUBLIC WORKS AND ENGINEERING

WESTWAY WASTEWATER TREATMENT PLANT IMPROVEMENTS

STORM WATER POLLUTION PREVENTION PLAN DETAILS

WBS NUMBER	FOR CITY OF HOUSTON USE ONLY
R-000265-0132-4	
SCALE	
CITY OF HOUSTON PM	
GAUHER KHAN, P.E.	
SHEET NO. 18 OF 46	

C-12

WESTWAY WASTEWATER TREATMENT PLANT IMPROVEMENTS – 2005-2014

P:\ACTIVE\15WW17\Working\SWPPP 20160405.dwg Jul 13, 2016-4:30pm Conrad

Appendix E

TPDES General Permit No. TXR150000

(Issued Feb 19, 2013)

Texas Commission on Environmental Quality

P.O. Box 13087, Austin, Texas 78711-3087

GENERAL PERMIT TO DISCHARGE UNDER THE

TEXAS POLLUTANT DISCHARGE ELIMINATION SYSTEM

under provisions of
Section 402 of the Clean Water Act
and Chapter 26 of the Texas Water Code

This permit supersedes and replaces
TPDES General Permit No. TXR150000, issued March 5, 2008

Construction sites that discharge stormwater associated with construction activity

located in the state of Texas

may discharge to surface water in the state

only according to monitoring requirements and other conditions set forth in this general permit, as well as the rules of the Texas Commission on Environmental Quality (TCEQ or Commission), the laws of the State of Texas, and other orders of the Commission of the TCEQ. The issuance of this general permit does not grant to the permittee the right to use private or public property for conveyance of stormwater and certain non-stormwater discharges along the discharge route. This includes property belonging to but not limited to any individual, partnership, corporation or other entity. Neither does this general permit authorize any invasion of personal rights nor any violation of federal, state, or local laws or regulations. It is the responsibility of the permittee to acquire property rights as may be necessary to use the discharge route.

This general permit and the authorization contained herein shall expire at midnight, five years from the permit effective date.

EFFECTIVE DATE: March 5, 2013

ISSUED DATE: FEB 19 2013

Bryan W. Shaw

For the Commission

TPDES GENERAL PERMIT NUMBER TXR150000 RELATING TO STORMWATER DISCHARGES ASSOCIATED WITH CONSTRUCTION ACTIVITIES

Table of Contents

Part I. Flow Chart and Definitions 5
Section A. Flow Chart to Determine Whether Coverage is Required 5
Section B. Definitions 6
Part II. Permit Applicability and Coverage 12
Section A. Discharges Eligible for Authorization 12
1. Stormwater Associated with Construction Activity 12
2. Discharges of Stormwater Associated with Construction Support Activities 12
3. Non-Stormwater Discharges 12
4. Other Permitted Discharges 13
Section B. Concrete Truck Wash Out 13
Section C. Limitations on Permit Coverage 13
1. Post Construction Discharges. 13
2. Prohibition of Non-Stormwater Discharges 13
3. Compliance With Water Quality Standards 13
4. Impaired Receiving Waters and Total Maximum Daily Load (TMDL) Requirements 14
5. Discharges to the Edwards Aquifer Recharge or Contributing Zone 14
6. Discharges to Specific Watersheds and Water Quality Areas 14
7. Protection of Streams and Watersheds by Other Governmental Entities 14
8. Indian Country Lands 14
9. Oil and Gas Production 15
10. Stormwater Discharges from Agricultural Activities 15
11. Endangered Species Act 15
12. Other 15
Section D. Deadlines for Obtaining Authorization to Discharge 15
1. Large Construction Activities 15
2. Small Construction Activities 15
Section E. Obtaining Authorization to Discharge 16
1. Automatic Authorization for Small Construction Activities With Low Potential for Erosion: 16
2. Automatic Authorization For All Other Small Construction Activities: 17
3. Authorization for Large Construction Activities: 17

4. Waivers for Small Construction Activities: 18
5. Effective Date of Coverage 18
6. Notice of Change (NOC) 18
7. Signatory Requirement for NOI Forms, Notice of Termination (NOT) Forms, NOC Letters, and Construction Site Notices 19
8. Contents of the NOI 19
Section F. Terminating Coverage 20
1. Notice of Termination (NOT) Required 20
2. Minimum Contents of the NOT 20
3. Termination of Coverage for Small Construction Sites and for Secondary Operators at Large Construction Sites 20
4. Transfer of Operational Control 21
Section G. Waivers from Coverage 21
1. Waiver Applicability and Coverage 22
2. Steps to Obtaining a Waiver 22
3. Effective Date of Waiver 22
4. Activities Extending Beyond the Waiver Period 22
Section H. Alternative TPDES Permit Coverage 23
1. Individual Permit Alternative 23
2. Individual Permit Required 23
3. Alternative Discharge Authorization 23
Section I. Permit Expiration 23
Part III. Stormwater Pollution Prevention Plans (SWP3) 24
Section A. Shared SWP3 Development 24
Section B. Responsibilities of Operators 25
1. Secondary Operators and Primary Operators with Control Over Construction Plans and Specifications 25
2. Primary Operators with Day-to-Day Operational Control 25
Section C. Deadlines for SWP3 Preparation, Implementation, and Compliance 25
Section D. Plan Review and Making Plans Available 26
Section E. Revisions and Updates to SWP3s 26
Section F. Contents of SWP3 26
Section G. Erosion and Sediment Control Requirements Applicable to All Sites 34
Part IV. Stormwater Runoff from Concrete Batch Plants 35
Section A. Benchmark Sampling Requirements 35
Section B. Best Management Practices (BMPs) and SWP3 Requirements 37
Section C. Prohibition of Wastewater Discharges 39

Part V. Concrete Truck Wash Out Requirements 40
Part VI. Retention of Records 40
Part VII. Standard Permit Conditions 40
Part VIII. Fees 41
Appendix A: Automatic Authorization 43
Appendix B: Erosivity Index (EI) Zones in Texas 45
Appendix C: Isoerodent Map 46
Appendix D: Erosivity Indices for EI Zones in Texas 47

Part I. Flow Chart and Definitions

Section A. Flow Chart to Determine Whether Coverage is Required

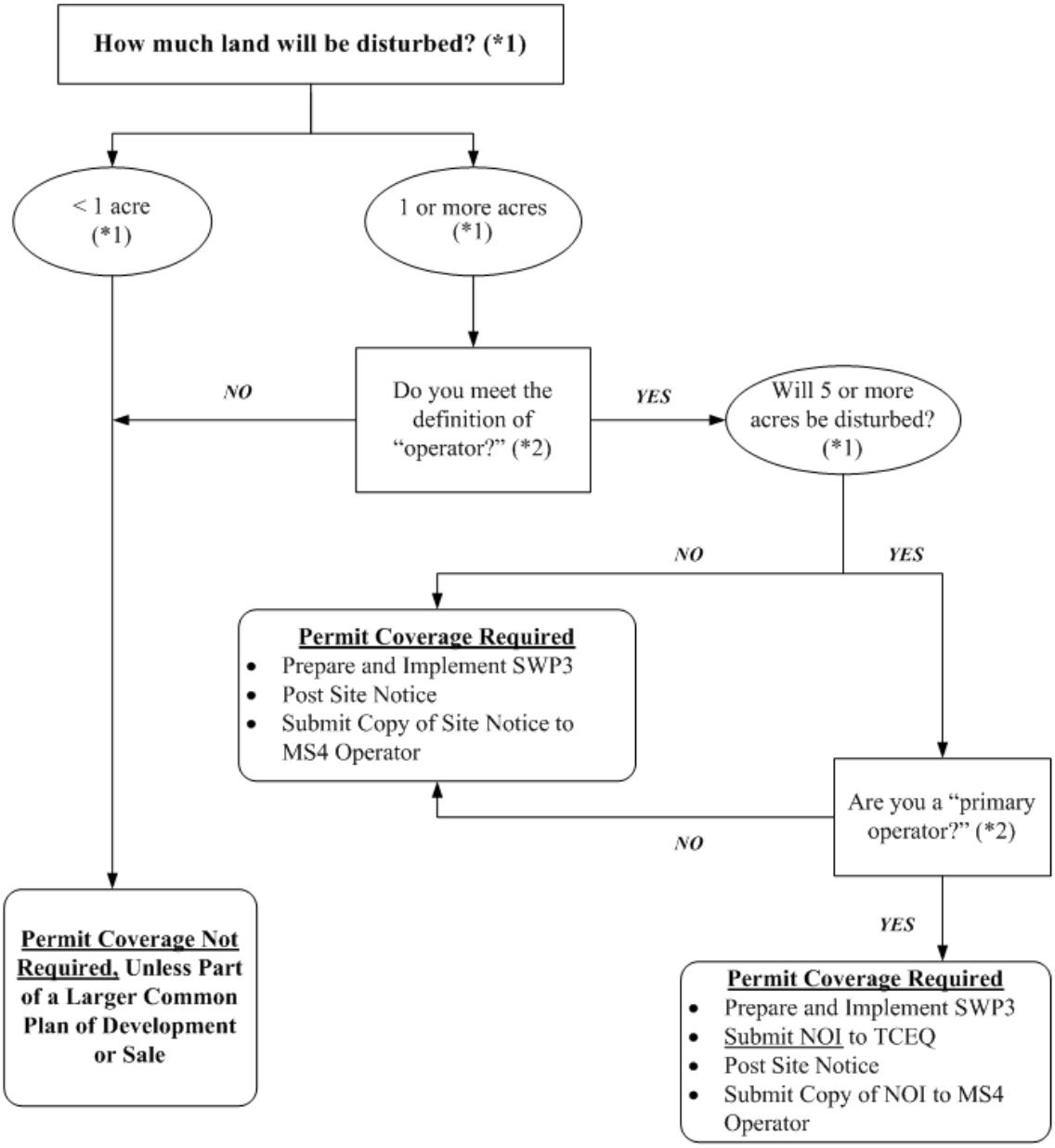

*(*1) To determine the size of the construction project, use the size of the entire area to be disturbed, and include the size of the larger common plan of development or sale, if the project is part of a larger project (refer to Part I.B., "Definitions," for an explanation of "common plan of development or sale").*

*(*2) Refer to the definitions for "operator," "primary operator," and "secondary operator" in Part I., Section B. of this permit.*

Section B. Definitions

Arid Areas - Areas with an average annual rainfall of 0 to 10 inches.

Best Management Practices (BMPs) - Schedules of activities, prohibitions of practices, maintenance procedures, structural controls, local ordinances, and other management practices to prevent or reduce the discharge of pollutants. BMPs also include treatment requirements, operating procedures, and practices to control construction site runoff, spills or leaks, waste disposal, or drainage from raw material storage areas.

Commencement of Construction - The initial disturbance of soils associated with clearing, grading, or excavation activities, as well as other construction-related activities (e.g., stockpiling of fill material, demolition).

Common Plan of Development - A construction activity that is completed in separate stages, separate phases, or in combination with other construction activities. A common plan of development (also known as a "common plan of development or sale") is identified by the documentation for the construction project that identifies the scope of the project, and may include plats, blueprints, marketing plans, contracts, building permits, a public notice or hearing, zoning requests, or other similar documentation and activities. A common plan of development does not necessarily include all construction projects within the jurisdiction of a public entity (e.g., a city or university). Construction of roads or buildings in different parts of the jurisdiction would be considered separate "common plans," with only the interconnected parts of a project being considered part of a "common plan" (e.g., a building and its associated parking lot and driveways, airport runway and associated taxiways, a building complex, etc.). Where discrete construction projects occur within a larger common plan of development or sale but are located ¼ mile or more apart, and the area between the projects is not being disturbed, each individual project can be treated as a separate plan of development or sale, provided that any interconnecting road, pipeline or utility project that is part of the same "common plan" is not included in the area to be disturbed.

Construction Activity - Includes soil disturbance activities, including clearing, grading, and excavating; and does not include routine maintenance that is performed to maintain the original line and grade, hydraulic capacity, or original purpose of the site (e.g., the routine grading of existing dirt roads, asphalt overlays of existing roads, the routine clearing of existing right-of-ways, and similar maintenance activities). Regulated construction activity is defined in terms of small and large construction activity.

Dewatering – The act of draining rainwater or groundwater from building foundations, vaults, and trenches.

Discharge – For the purposes of this permit, the drainage, release, or disposal of pollutants in stormwater and certain non-stormwater from areas where soil disturbing activities (e.g., clearing, grading, excavation, stockpiling of fill material, and demolition), construction materials or equipment storage or maintenance (e.g., fill piles, borrow area, concrete truck wash out, fueling), or other industrial stormwater directly related to the construction process (e.g., concrete or asphalt batch plants) are located.

Drought-Stricken Area – For the purposes of this permit, an area in which the National Oceanic and Atmospheric Administration's U.S. Seasonal Drought Outlook indicates for the period during which the construction will occur that any of the following conditions are likely: (1) "Drought to persist or intensify", (2) "Drought ongoing, some improvement", (3) "Drought likely to improve, impacts ease", or (4) "Drought development likely". See http://www.cpc.ncep.noaa.gov/products/expert_assessment/seasonal_drought.html.

Edwards Aquifer - As defined under Texas Administrative Code (TAC) § 213.3 of this title (relating to the Edwards Aquifer), that portion of an arcuate belt of porous, water-bearing, predominantly carbonate rocks known as the Edwards and Associated Limestones in the Balcones Fault Zone trending from west to east to northeast in Kinney, Uvalde, Medina, Bexar, Comal, Hays, Travis, and Williamson Counties; and composed of the Salmon Peak

Limestone, McKnight Formation, West Nueces Formation, Devil's River Limestone, Person Formation, Kainer Formation, Edwards Formation, and Georgetown Formation. The permeable aquifer units generally overlie the less-permeable Glen Rose Formation to the south, overlie the less-permeable Comanche Peak and Walnut Formations north of the Colorado River, and underlie the less-permeable Del Rio Clay regionally.

Edwards Aquifer Recharge Zone - Generally, that area where the stratigraphic units constituting the Edwards Aquifer crop out, including the outcrops of other geologic formations in proximity to the Edwards Aquifer, where caves, sinkholes, faults, fractures, or other permeable features would create a potential for recharge of surface waters into the Edwards Aquifer. The recharge zone is identified as that area designated as such on official maps located in the offices of the Texas Commission on Environmental Quality (TCEQ) and the appropriate regional office. The Edwards Aquifer Map Viewer, located at http://www.tceq.texas.gov/compliance/field_ops/eapp/mapdisclaimer.html, can be used to determine where the recharge zone is located.

Edwards Aquifer Contributing Zone - The area or watershed where runoff from precipitation flows downgradient to the recharge zone of the Edwards Aquifer. The contributing zone is located upstream (upgradient) and generally north and northwest of the recharge zone for the following counties: all areas within Kinney County, except the area within the watershed draining to Segment No. 2304 of the Rio Grande Basin; all areas within Uvalde, Medina, Bexar, and Comal Counties; all areas within Hays and Travis Counties, except the area within the watersheds draining to the Colorado River above a point 1.3 miles upstream from Tom Miller Dam, Lake Austin at the confluence of Barrow Brook Cove, Segment No. 1403 of the Colorado River Basin; and all areas within Williamson County, except the area within the watersheds draining to the Lampasas River above the dam at Stillhouse Hollow reservoir, Segment No. 1216 of the Brazos River Basin. The contributing zone is illustrated on the Edwards Aquifer map viewer at http://www.tceq.texas.gov/compliance/field_ops/eapp/mapdisclaimer.html.

Effluent Limitations Guideline (ELG) – Defined in 40 Code of Federal Regulations (CFR) § 122.2 as a regulation published by the Administrator under § 304(b) of the Clean Water Act (CWA) to adopt or revise effluent limitations.

Facility or Activity – For the purpose of this permit, a construction site or construction support activity that is regulated under this general permit, including all contiguous land and fixtures (for example, ponds and materials stockpiles), structures, or appurtances used at a construction site or industrial site described by this general permit.

Final Stabilization - A construction site status where any of the following conditions are met:

A. All soil disturbing activities at the site have been completed and a uniform (that is, evenly distributed, without large bare areas) perennial vegetative cover with a density of at least 70% of the native background vegetative cover for the area has been established on all unpaved areas and areas not covered by permanent structures, or equivalent permanent stabilization measures (such as the use of riprap, gabions, or geotextiles) have been employed.

B. For individual lots in a residential construction site by either:

   (1) the homebuilder completing final stabilization as specified in condition (a) above; or

   (2) the homebuilder establishing temporary stabilization for an individual lot prior to the time of transfer of the ownership of the home to the buyer and after informing the homeowner of the need for, and benefits of, final stabilization. If temporary stabilization is not feasible, then the homebuilder may fulfill this requirement by retaining perimeter controls or BMPs, and informing the homeowner of the need for removal of temporary controls and the establishment of final stabilization.

Fullfillment of this requirement must be documented in the homebuilder's stormwater pollution prevention plan (SWP3).

C. For construction activities on land used for agricultural purposes (such as pipelines across crop or range land), final stabilization may be accomplished by returning the disturbed land to its preconstruction agricultural use. Areas disturbed that were not previously used for agricultural activities, such as buffer strips immediately adjacent to surface water and areas that are not being returned to their preconstruction agricultural use must meet the final stabilization conditions of condition (a) above.

D. In arid, semi-arid, and drought-stricken areas only, all soil disturbing activities at the site have been completed and both of the following criteria have been met:

(1) Temporary erosion control measures (for example, degradable rolled erosion control product) are selected, designed, and installed along with an appropriate seed base to provide erosion control for at least three years without active maintenance by the operator, and

(2) The temporary erosion control measures are selected, designed, and installed to achieve 70% of the native background vegetative coverage within three years.

Hyperchlorination of Waterlines – Treatment of potable water lines or tanks with chlorine for disinfection purposes, typically following repair or partial replacement of the waterline or tank, and subsequently flushing the contents.

Impaired Water - A surface water body that is identified on the latest approved CWA §303(d) List as not meeting applicable state water quality standards. Impaired waters include waters with approved or established total maximum daily loads (TMDLs), and those where a TMDL has been proposed by TCEQ but has not yet been approved or established.

Indian Country Land – (from 40 CFR §122.2) (1) all land within the limits of any Indian reservation under the jurisdiction of the United States government, notwithstanding the issuance of any patent, and, including rights-of-way running through the reservation; (2) all dependent Indian communities with the borders of the United States whether within the originally or subsequently acquired territory thereof, and whether within or without the limits of a state; and (3) all Indian allotments, the Indian titles to which have not been extinguished, including rights-of-way running through the same.

Indian Tribe - (from 40 CFR §122.2) any Indian Tribe, band, group, or community recognized by the Secretary of the Interior and exercising governmental authority over a Federal Indian Reservation.

Large Construction Activity - Construction activities including clearing, grading, and excavating that result in land disturbance of equal to or greater than five (5) acres of land. Large construction activity also includes the disturbance of less than five (5) acres of total land area that is part of a larger common plan of development or sale if the larger common plan will ultimately disturb equal to or greater than five (5) acres of land. Large construction activity does not include routine maintenance that is performed to maintain the original line and grade, hydraulic capacity, or original purpose of the site (for example, the routine grading of existing dirt roads, asphalt overlays of existing roads, the routine clearing of existing right-of-ways, and similar maintenance activities.)

Linear Project – Includes the construction of roads, bridges, conduits, substructures, pipelines, sewer lines, towers, poles, cables, wires, connectors, switching, regulating and transforming equipment and associated ancillary facilities in a long, narrow area.

Minimize - To reduce or eliminate to the extent achievable using stormwater controls that are technologically available and economically practicable and achievable in light of best industry practices.

Municipal Separate Storm Sewer System (MS4) - A separate storm sewer system owned or operated by the United States, a state, city, town, county, district, association, or other public body (created by or pursuant to state law) having jurisdiction over the disposal of sewage, industrial wastes, stormwater, or other wastes, including special districts under state law such as a sewer district, flood control or drainage district, or similar entity, or an Indian tribe or an authorized Indian tribal organization, that discharges to surface water in the state.

Notice of Change (NOC) – Written notification to the executive director from a discharger authorized under this permit, providing changes to information that was previously provided to the agency in a notice of intent form.

Notice of Intent (NOI) - A written submission to the executive director from an applicant requesting coverage under this general permit.

Notice of Termination (NOT) - A written submission to the executive director from a discharger authorized under a general permit requesting termination of coverage.

Operator - The person or persons associated with a large or small construction activity that is either a primary or secondary operator as defined below:

Primary Operator – the person or persons associated with a large or small construction activity that meets either of the following two criteria:

(a) the person or persons have on-site operational control over construction plans and specifications, including the ability to make modifications to those plans and specifications; or

(b) the person or persons have day-to-day operational control of those activities at a construction site that are necessary to ensure compliance with a Storm Water Pollution Prevention Plan (SWP3) for the site or other permit conditions (for example, they are authorized to direct workers at a site to carry out activities required by the SWP3 or comply with other permit conditions).

Secondary Operator – The person or entity, often the property owner, whose operational control is limited to:

(a) the employment of other operators, such as a general contractor, to perform or supervise construction activities; or

(b) the ability to approve or disapprove changes to construction plans and specifications, but who does not have day-to-day on-site operational control over construction activities at the site.

Secondary operators must either prepare their own SWP3 or participate in a shared SWP3 that covers the areas of the construction site where they have control over the plans and specifications.

If there is not a primary operator at the construction site, then the secondary operator is defined as the primary operator and must comply with the requirements for primary operators.

Outfall - For the purpose of this permit, a point source at the point where stormwater runoff associated with construction activity discharges to surface water in the state and does not include open conveyances connecting two municipal separate storm sewers, or pipes, tunnels, or other conveyances that connect segments of the same stream or other water of the U.S. and are used to convey waters of the U.S.

Permittee - An operator authorized under this general permit. The authorization may be gained through submission of a notice of intent, by waiver, or by meeting the requirements for automatic coverage to discharge stormwater runoff and certain non-stormwater discharges.

Point Source – (from 40 CFR §122.2) Any discernible, confined, and discrete conveyance, including but not limited to, any pipe, ditch, channel, tunnel, conduit, well, discrete fissure, container, rolling stock concentrated animal feeding operation, landfill leachate collection system, vessel or other floating craft from which pollutants are, or may be, discharged. This term does not include return flows from irrigated agriculture or agricultural stormwater runoff.

Pollutant - Dredged spoil, solid waste, incinerator residue, sewage, garbage, sewage sludge, filter backwash, munitions, chemical wastes, biological materials, radioactive materials, heat, wrecked or discarded equipment, rock, sand, cellar dirt, and industrial, municipal, and agricultural waste discharged into any surface water in the state. The term "pollutant" does not include tail water or runoff water from irrigation or rainwater runoff from cultivated or uncultivated rangeland, pastureland, and farmland. For the purpose of this permit, the term "pollutant" includes sediment.

Pollution - (from Texas Water Code (TWC) §26.001(14)) The alteration of the physical, thermal, chemical, or biological quality of, or the contamination of, any surface water in the state that renders the water harmful, detrimental, or injurious to humans, animal life, vegetation, or property or to public health, safety, or welfare, or impairs the usefulness or the public enjoyment of the water for any lawful or reasonable purpose.

Rainfall Erosivity Factor (R factor) - the total annual erosive potential that is due to climatic effects, and is part of the Revised Universal Soil Loss Equation (RUSLE).

Receiving Water - A "Water of the United States" as defined in 40 CFR §122.2 into which the regulated stormwater discharges.

Semiarid Areas - areas with an average annual rainfall of 10 to 20 inches

Separate Storm Sewer System - A conveyance or system of conveyances (including roads with drainage systems, streets, catch basins, curbs, gutters, ditches, man-made channels, or storm drains), designed or used for collecting or conveying stormwater; that is not a combined sewer, and that is not part of a publicly owned treatment works (POTW).

Small Construction Activity - Construction activities including clearing, grading, and excavating that result in land disturbance of equal to or greater than one (1) acre and less than five (5) acres of land. Small construction activity also includes the disturbance of less than one (1) acre of total land area that is part of a larger common plan of development or sale if the larger common plan will ultimately disturb equal to or greater than one (1) and less than five (5) acres of land. Small construction activity does not include routine maintenance that is performed to maintain the original line and grade, hydraulic capacity, or original purpose of the site (for example, the routine grading of existing dirt roads, asphalt overlays of existing roads, the routine clearing of existing right-of-ways, and similar maintenance activities.)

Steep Slopes – Where a state, Tribe, local government, or industry technical manual (e.g. stormwater BMP manual) has defined what is to be considered a "steep slope", this permit's definition automatically adopts that definition. Where no such definition exists, steep slopes are automatically defined as those that are 15 percent or greater in grade.

Stormwater (or Stormwater Runoff) - Rainfall runoff, snow melt runoff, and surface runoff and drainage.

Stormwater Associated with Construction Activity - Stormwater runoff from a construction activity where soil disturbing activities (including clearing, grading, excavating) result in the disturbance of one (1) or more acres of total land area, or are part of a larger common plan of development or sale that will result in disturbance of one (1) or more acres of total land area.

Structural Control (or Practice) - A pollution prevention practice that requires the construction of a device, or the use of a device, to reduce or prevent pollution in stormwater

runoff. Structural controls and practices may include but are not limited to: silt fences, earthen dikes, drainage swales, sediment traps, check dams, subsurface drains, storm drain inlet protection, rock outlet protection, reinforced soil retaining systems, gabions, and temporary or permanent sediment basins.

Surface Water in the State - Lakes, bays, ponds, impounding reservoirs, springs, rivers, streams, creeks, estuaries, wetlands, marshes, inlets, canals, the Gulf of Mexico inside the territorial limits of the state (from the mean high water mark (MHWM) out 10.36 miles into the Gulf), and all other bodies of surface water, natural or artificial, inland or coastal, fresh or salt, navigable or nonnavigable, and including the beds and banks of all water-courses and bodies of surface water, that are wholly or partially inside or bordering the state or subject to the jurisdiction of the state; except that waters in treatment systems which are authorized by state or federal law, regulation, or permit, and which are created for the purpose of waste treatment are not considered to be water in the state.

Temporary Stabilization - A condition where exposed soils or disturbed areas are provided a protective cover or other structural control to prevent the migration of pollutants. Temporary stabilization may include temporary seeding, geotextiles, mulches, and other techniques to reduce or eliminate erosion until either permanent stabilization can be achieved or until further construction activities take place.

Total Maximum Daily Load (TMDL) - The total amount of a pollutant that a water body can assimilate and still meet the Texas Surface Water Quality Standards.

Turbidity – A condition of water quality characterized by the presence of suspended solids and/or organic material.

Waters of the United States - (from 40 CFR §122.2) Waters of the United States or waters of the U.S. means:

(a) all waters which are currently used, were used in the past, or may be susceptible to use in interstate or foreign commerce, including all waters which are subject to the ebb and flow of the tide;

(b) all interstate waters, including interstate wetlands;

(c) all other waters such as intrastate lakes, rivers, streams (including intermittent streams), mudflats, sandflats, wetlands, sloughs, prairie potholes, wet meadows, playa lakes, or natural ponds that the use, degradation, or destruction of which would affect or could affect interstate or foreign commerce including any such waters:

(1) which are or could be used by interstate or foreign travelers for recreational or other purposes;

(2) from which fish or shellfish are or could be taken and sold in interstate or foreign commerce; or

(3) which are used or could be used for industrial purposes by industries in interstate commerce;

(d) all impoundments of waters otherwise defined as waters of the United States under this definition;

(e) tributaries of waters identified in paragraphs (a) through (d) of this definition;

(f) the territorial sea; and

(g) wetlands adjacent to waters (other than waters that are themselves wetlands) identified in paragraphs (a) through (f) of this definition.

Waste treatment systems, including treatment ponds or lagoons designed to meet the requirements of CWA (other than cooling ponds as defined in 40 CFR §423.11(m) which also meet the criteria of this definition) are not waters of the U.S. This exclusion applies only to manmade bodies of water which neither were originally created in waters of the U.S. (such as

disposal area in wetlands) nor resulted from the impoundment of waters of the U.S. Waters of the U.S. do not include prior converted cropland. Notwithstanding the determination of an area's status as prior converted cropland by any other federal agency, for the purposes of the CWA, the final authority regarding CWA jurisdiction remains with EPA.

Part II. Permit Applicability and Coverage

Section A. Discharges Eligible for Authorization

1. Stormwater Associated with Construction Activity

Discharges of stormwater runoff from small and large construction activities may be authorized under this general permit.

2. Discharges of Stormwater Associated with Construction Support Activities

Examples of construction support activities include, but are not limited to, concrete batch plants, rock crushers, asphalt batch plants, equipment staging areas, material storage yards, material borrow areas, and excavated material disposal areas. Construction support activities authorized under this general permit are not commercial operations, and do not serve multiple unrelated construction projects. Discharges of stormwater runoff from construction support activities may be authorized under this general permit, provided that the following conditions are met:

(a) the activities are located within one (1) mile from the boundary of the permitted construction site and directly support the construction activity;

(b) an SWP3 is developed for the permitted construction site according to the provisions of this general permit, and includes appropriate controls and measures to reduce erosion and discharge of pollutants in stormwater runoff from the construction support activities; and

(c) the construction support activities either do not operate beyond the completion date of the construction activity or, at the time that they do, are authorized under separate Texas Pollutant Discharge Elimination System (TPDES) authorization. Separate TPDES authorization may include the TPDES Multi Sector General Permit (MSGP), TXR050000 (related to stormwater discharges associated with industrial activity), separate authorization under this general permit if applicable, coverage under an alternative general permit if available, or authorization under an individual water quality permit.

3. Non-Stormwater Discharges

The following non-stormwater discharges from sites authorized under this general permit are also eligible for authorization under this general permit:

(a) discharges from fire fighting activities (fire fighting activities do not include washing of trucks, run-off water from training activities, test water from fire suppression systems, or similar activities);

(b) uncontaminated fire hydrant flushings (excluding discharges of hyperchlorinated water, unless the water is first dechlorinated and discharges are not expected to adversely affect aquatic life), which include flushings from systems that utilize potable water, surface water, or groundwater that does not contain additional pollutants (uncontaminated fire hydrant flushings do not include systems utilizing reclaimed wastewater as a source water);

(c) water from the routine external washing of vehicles, the external portion of buildings or structures, and pavement, where detergents and soaps are not used, where spills or leaks of toxic or hazardous materials have not occurred (unless spilled materials

have been removed; and if local state, or federal regulations are applicable, the materials are removed according to those regulations), and where the purpose is to remove mud, dirt, or dust;

(d) uncontaminated water used to control dust;

(e) potable water sources, including waterline flushings, but excluding discharges of hyperchlorinated water, unless the water is first dechlorinated and discharges are not expected to adversely affect aquatic life;

(f) uncontaminated air conditioning condensate;

(g) uncontaminated ground water or spring water, including foundation or footing drains where flows are not contaminated with industrial materials such as solvents; and

(h) lawn watering and similar irrigation drainage.

4. Other Permitted Discharges

Any discharge authorized under a separate National Pollutant Discharge Elimination System (NPDES), TPDES, or TCEQ permit may be combined with discharges authorized by this general permit, provided those discharges comply with the associated permit.

Section B. Concrete Truck Wash Out

The wash out of concrete trucks at regulated construction sites must be performed in accordance with the requirements of Part V of this general permit.

Section C. Limitations on Permit Coverage

1. Post Construction Discharges

Discharges that occur after construction activities have been completed, and after the construction site and any supporting activity site have undergone final stabilization, are not eligible for coverage under this general permit. Discharges originating from the sites are not authorized under this general permit following the submission of the notice of termination (NOT) or removal of the appropriate site notice, as applicable, for the regulated construction activity.

2. Prohibition of Non-Stormwater Discharges

Except as otherwise provided in Part II.A. of this general permit, only discharges that are composed entirely of stormwater associated with construction activity may be authorized under this general permit.

3. Compliance With Water Quality Standards

Discharges to surface water in the state that would cause, have the reasonable potential to cause, or contribute to a violation of water quality standards or that would fail to protect and maintain existing designated uses are not eligible for coverage under this general permit. The executive director may require an application for an individual permit or alternative general permit (see Parts II.H.2. and 3.) to authorize discharges to surface water in the state if the executive director determines that any activity will cause, has the reasonable potential to cause, or contribute to a violation of water quality standards or is found to cause, has the reasonable potential to cause, or contribute to, the impairment of a designated use. The executive director may also require an application for an individual permit considering factors described in Part II.H.2. of this general permit.

4. Impaired Receiving Waters and Total Maximum Daily Load (TMDL) Requirements

New sources or new discharges of the pollutants of concern to impaired waters are not authorized by this permit unless otherwise allowable under 30 TAC Chapter 305 and applicable state law. Impaired waters are those that do not meet applicable water quality standards and are listed on the EPA approved CWA §303(d) List. Pollutants of concern are those for which the water body is listed as impaired.

Discharges of the pollutants of concern to impaired water bodies for which there is a TMDL are not eligible for this general permit unless they are consistent with the approved TMDL. Permittees must incorporate the conditions and requirements applicable to their discharges into their SWP3, in order to be eligible for coverage under this general permit. For consistency with the construction stormwater-related items in an approved TMDL, the SWP3 must be consistent with any applicable condition, goal, or requirement in the TMDL, TMDL Implementation Plan (I-Plan), or as otherwise directed by the executive director.

5. Discharges to the Edwards Aquifer Recharge or Contributing Zone

Discharges cannot be authorized by this general permit where prohibited by 30 TAC Chapter 213 (relating to Edwards Aquifer). In addition, commencement of construction (i.e., the initial disturbance of soils associated with clearing, grading, or excavating activities, as well as other construction-related activities such as stockpiling of fill material and demolition) at a site regulated under 30 TAC Chapter 213, may not begin until the appropriate Edwards Aquifer Protection Plan (EAPP) has been approved by the TCEQ's Edwards Aquifer Protection Program.

(a) For new discharges located within the Edwards Aquifer Recharge Zone, or within that area upstream from the recharge zone and defined as the Contributing Zone (CZ), operators must meet all applicable requirements of, and operate according to, 30 TAC Chapter 213 (Edwards Aquifer Rule) in addition to the provisions and requirements of this general permit.

(b) For existing discharges located within the Edwards Aquifer Recharge Zone, the requirements of the agency-approved Water Pollution Abatement Plan (WPAP) under the Edwards Aquifer Rule is in addition to the requirements of this general permit. BMPs and maintenance schedules for structural stormwater controls, for example, may be required as a provision of the rule. All applicable requirements of the Edwards Aquifer Rule for reductions of suspended solids in stormwater runoff are in addition to the requirements in this general permit for this pollutant.

6. Discharges to Specific Watersheds and Water Quality Areas

Discharges otherwise eligible for coverage cannot be authorized by this general permit where prohibited by 30 TAC Chapter 311 (relating to Watershed Protection) for water quality areas and watersheds.

7. Protection of Streams and Watersheds by Other Governmental Entities

This general permit does not limit the authority or ability of federal, other state, or local governmental entities from placing additional or more stringent requirements on construction activities or discharges from construction activities. For example, this permit does not limit the authority of a home-rule municipality provided by Texas Local Government Code §401.002.

8. Indian Country Lands

Stormwater runoff from construction activities occurring on Indian Country lands are not under the authority of the TCEQ and are not eligible for coverage under this general permit. If discharges of stormwater require authorization under federal NPDES

regulations, authority for these discharges must be obtained from the U.S. Environmental Protection Agency (EPA).

9. Oil and Gas Production

Stormwater runoff from construction activities associated with the exploration, development, or production of oil or gas or geothermal resources, including transportation of crude oil or natural gas by pipeline, are not under the authority of the TCEQ and are not eligible for coverage under this general permit. If discharges of stormwater require authorization under federal NPDES regulations, authority for these discharges must be obtained from the EPA.

10. Stormwater Discharges from Agricultural Activities

Stormwater discharges from agricultural activities that are not point source discharges of stormwater are not subject to TPDES permit requirements. These activities may include clearing and cultivating ground for crops, construction of fences to contain livestock, construction of stock ponds, and other similar agricultural activities. Discharges of stormwater runoff associated with the construction of facilities that are subject to TPDES regulations, such as the construction of concentrated animal feeding operations, would be point sources regulated under this general permit.

11. Endangered Species Act

Discharges that would adversely affect a listed endangered or threatened aquatic or aquatic-dependent species or its critical habitat are not authorized by this permit, unless the requirements of the Endangered Species Act are satisfied. Federal requirements related to endangered species apply to all TPDES permitted discharges and site-specific controls may be required to ensure that protection of endangered or threatened species is achieved. If a permittee has concerns over potential impacts to listed species, the permittee may contact TCEQ for additional information.

12. Other

Nothing in Part II of the general permit is intended to negate any person's ability to assert the force majeure (act of God, war, strike, riot, or other catastrophe) defenses found in 30 TAC §70.7.

Section D. Deadlines for Obtaining Authorization to Discharge

1. Large Construction Activities

(a) New Construction - Discharges from sites where the commencement of construction occurs on or after the effective date of this general permit must be authorized, either under this general permit or a separate TPDES permit, prior to the commencement of those construction activities.

(b) Ongoing Construction - Operators of large construction activities continuing to operate after the effective date of this permit, and authorized under TPDES general permit TXR150000 (effective on March 5, 2008), must submit an NOI to renew authorization or a NOT to terminate coverage under this general permit within 90 days of the effective date of this general permit. During this interim period, as a requirement of this TPDES permit, the operator must continue to meet the conditions and requirements of the previous TPDES permit.

2. Small Construction Activities

(a) New Construction - Discharges from sites where the commencement of construction occurs on or after the effective date of this general permit must be authorized, either

under this general permit or a separate TPDES permit, prior to the commencement of those construction activities.

(b) Ongoing Construction - Discharges from ongoing small construction activities that commenced prior to the effective date of this general permit, and that would not meet the conditions to qualify for termination of this permit as described in Part II.E. of this general permit, must meet the requirements to be authorized, either under this general permit or a separate TPDES permit, within 90 days of the effective date of this general permit. During this interim period, as a requirement of this TPDES permit, the operator must continue to meet the conditions and requirements of the previous TPDES permit.

Section E. Obtaining Authorization to Discharge

1. Automatic Authorization for Small Construction Activities With Low Potential for Erosion:

If all of the following conditions are met, then a small construction activity is determined to occur during periods of low potential for erosion, and a site operator may be automatically authorized under this general permit without being required to develop an SWP3 or submit an NOI:

(a) the construction activity occurs in a county listed in Appendix A;

(b) the construction activity is initiated and completed, including either final or temporary stabilization of all disturbed areas, within the time frame identified in Appendix A for the location of the construction site;

(c) all temporary stabilization is adequately maintained to effectively reduce or prohibit erosion, permanent stabilization activities have been initiated, and a condition of final stabilization is completed no later than 30 days following the end date of the time frame identified in Appendix A for the location of the construction site;

(d) the permittee signs a completed TCEQ construction site notice, including the certification statement;

(e) a signed copy of the construction site notice is posted at the construction site in a location where it is readily available for viewing by the general public, local, state, and federal authorities prior to commencing construction activities, and maintained in that location until completion of the construction activity;

(f) a copy of the signed and certified construction site notice is provided to the operator of any MS4 receiving the discharge at least two days prior to commencement of construction activities;

(g) any supporting concrete batch plant or asphalt batch plant is separately authorized for discharges of stormwater runoff or other non-stormwater discharges under an individual TPDES permit, another TPDES general permit, or under an individual TCEQ permit where stormwater and non-stormwater is disposed of by evaporation or irrigation (discharges are adjacent to water in the state); and

(h) any non-stormwater discharges are either authorized under a separate permit or authorization, or are not considered to be a wastewater.

Part II.G. of this general permit describes how an operator may apply for and obtain a waiver from permitting, for certain small construction activities that occur during a period with a low potential for erosion, where automatic authorization under this section is not available.

2. Automatic Authorization For All Other Small Construction Activities:

Operators of small construction activities not described in Part II.E.1. above may be automatically authorized under this general permit, and operators of these sites shall not be required to submit an NOI, provided that they meet all of the following conditions:

(a) develop a SWP3 according to the provisions of this general permit, that covers either the entire site or all portions of the site for which the applicant is the operator, and implement that plan prior to commencing construction activities;

(b) sign and certify a completed TCEQ small construction site notice, post the notice at the construction site in a location where it is safely and readily available for viewing by the general public, local, state, and federal authorities, prior to commencing construction, and maintain the notice in that location until completion of the construction activity (for linear construction activities, e.g. pipeline or highway, the site notice must be placed in a publicly accessible location near where construction is actively underway; notice for these linear sites may be relocated, as necessary, along the length of the project, and the notice must be safely and readily available for viewing by the general public; local, state, and federal authorities); and

(c) provide a copy of the signed and certified construction site notice to the operator of any municipal separate storm sewer system receiving the discharge prior to commencement of construction activities.

Operators of small construction activities as defined in Part I.B of this general permit shall not submit an NOI for coverage unless otherwise required by the executive director.

As described in Part I (Definitions) of this general permit, large construction activities include those that will disturb less than five (5) acres of land, but that are part of a larger common plan of development or sale that will ultimately disturb five (5) or more acres of land, and must meet the requirements of Part II.E.3. below.

3. Authorization for Large Construction Activities:

Operators of large construction activities that qualify for coverage under this general permit must meet all of the following conditions:

(a) develop a SWP3 according to the provisions of this general permit that covers either the entire site or all portions of the site for which the applicant is the operator, and implement that plan prior to commencing construction activities;

(b) primary operators must submit an NOI, using a form provided by the executive director, at least seven (7) days prior to commencing construction activities, or if utilizing electronic submittal, prior to commencing construction activities. If an additional primary operator is added after the initial NOI is submitted, the new primary operator must submit an NOI at least seven (7) days before assuming operational control, or if utilizing electronic NOI submittal, prior to assuming operational control. If the primary operator changes after the initial NOI is submitted, the new primary operator must submit a paper NOI or an electronic NOI at least ten (10) days before assuming operational control;

(c) all operators of large construction activities must post a site notice in accordance with Part III.D.2. of this permit. The site notice must be located where it is safely and readily available for viewing by the general public, local, state, and federal authorities prior to commencing construction, and must be maintained in that location until completion of the construction activity (for linear construction activities, e.g. pipeline or highway, the site notice must be placed in a publicly accessible location near where construction is actively underway; notice for these linear sites may be relocated, as necessary, along the length of the project, and the notice must be safely and readily available for viewing by the general public; local, state, and federal authorities);

(d) prior to commencing construction activities, all primary operators must (1) provide a copy of the signed NOI to the operator of any MS4 receiving the discharge and to any secondary construction operator, and (2) list in the SWP3 the names and addresses of all MS4 operators receiving a copy;

(e) all persons meeting the definition of "secondary operator" in Part I of this permit are hereby notified that they are regulated under this general permit, but are not required to submit an NOI, provided that a primary operator at the site has submitted an NOI, or is required to submit an NOI, and the secondary operator has provided notification to the operator(s) of the need to obtain coverage (with records of notification available upon request). Any secondary operator notified under this provision may alternatively submit an NOI under this general permit, may seek coverage under an alternative TPDES individual permit, or may seek coverage under an alternative TPDES general permit if available; and

(f) all secondary operators must provide a copy of the signed and certified Secondary Operator construction site notice to the operator of any MS4 receiving the discharge prior to commencement of construction activities.

4. Waivers for Small Construction Activities:

Part II.G. describes how operators of certain small construction activities may obtain a waiver from coverage.

5. Effective Date of Coverage

(a) Operators of small construction activities as described in either Part II.E.1. or II.E.2. above are authorized immediately following compliance with the applicable conditions of Part II.E.1. or II.E.2. Secondary operators of large construction activities as described in Part II.E.3. above are authorized immediately following compliance with the applicable conditions in Part II.E.3. For activities located in areas regulated by 30 TAC Chapter 213, related to the Edwards Aquifer, this authorization to discharge is separate from the requirements of the operator's responsibilities under that rule. Construction may not commence for sites regulated under 30 TAC Chapter 213 until all applicable requirements of that rule are met.

(b) Primary operators of large construction activities as described in Part II.E.3. above are provisionally authorized seven (7) days from the date that a completed NOI is postmarked for delivery to the TCEQ, unless otherwise notified by the executive director. If electronic submission of the NOI is provided, and unless otherwise notified by the executive director, primary operators are authorized immediately following confirmation of receipt of the NOI by the TCEQ. Authorization is non-provisional when the executive director finds the NOI is administratively complete and an authorization number is issued for the activity. For activities located in areas regulated by 30 TAC Chapter 213, related to the Edwards Aquifer, this authorization to discharge is separate from the requirements of the operator's responsibilities under that rule. Construction may not commence for sites regulated under 30 TAC Chapter 213 until all applicable requirements of that rule are met.

(c) Operators are not prohibited from submitting late NOIs or posting late notices to obtain authorization under this general permit. The TCEQ reserves the right to take appropriate enforcement actions for any unpermitted activities that may have occurred between the time construction commenced and authorization was obtained.

6. Notice of Change (NOC)

If relevant information provided in the NOI changes, an NOC must be submitted at least 14 days before the change occurs, if possible. Where 14-day advance notice is not possible, the operator must submit an NOC within 14 days of discovery of the change. If

the operator becomes aware that it failed to submit any relevant facts or submitted incorrect information in an NOI, the correct information must be provided to the executive director in an NOC within 14 days after discovery. The NOC shall be submitted on a form provided by the executive director, or by letter if an NOC form is not available. A copy of the NOC must also be provided to the operator of any MS4 receiving the discharge, and a list must be included in the SWP3 that includes the names and addresses of all MS4 operators receiving a copy.

Information that may be included on an NOC includes, but is not limited to, the following: the description of the construction project, an increase in the number of acres disturbed (for increases of one or more acres), or the operator name. A transfer of operational control from one operator to another, including a transfer of the ownership of a company, may not be included in an NOC.

A transfer of ownership of a company includes changes to the structure of a company, such as changing from a partnership to a corporation or changing corporation types, so that the filing number (or charter number) that is on record with the Texas Secretary of State must be changed.

An NOC is not required for notifying TCEQ of a decrease in the number of acres disturbed. This information must be included in the SWP3 and retained on site.

7. Signatory Requirement for NOI Forms, Notice of Termination (NOT) Forms, NOC Letters, and Construction Site Notices

NOI forms, NOT forms, NOC letters, and Construction Site Notices that require a signature must be signed according to 30 TAC § 305.44 (relating to Signatories for Applications).

8. Contents of the NOI

The NOI form shall require, at a minimum, the following information:

(a) the TPDES CGP authorization number for existing authorizations under this general permit, where the operator submits an NOI to renew coverage within 90 days of the effective date of this general permit;

(b) the name, address, and telephone number of the operator filing the NOI for permit coverage;

(c) the name (or other identifier), address, county, and latitude/longitude of the construction project or site;

(d) the number of acres that will be disturbed by the applicant;

(e) confirmation that the project or site will not be located on Indian Country lands;

(f) confirmation that a SWP3 has been developed in accordance with this general permit, that it will be implemented prior to construction, and that it is compliant with any applicable local sediment and erosion control plans; for multiple operators who prepare a shared SWP3, the confirmation for an operator may be limited to its obligations under the SWP3 provided all obligations are confirmed by at least one operator;

(g) name of the receiving water(s);

(h) the classified segment number for each classified segment that receives discharges from the regulated construction activity (if the discharge is not directly to a classified segment, then the classified segment number of the first classified segment that those discharges reach); and

(i) the name of all surface waters receiving discharges from the regulated construction activity that are on the latest EPA-approved CWA § 303(d) List of impaired waters.

Section F. Terminating Coverage

1. Notice of Termination (NOT) Required

Each operator that has submitted an NOI for authorization under this general permit must apply to terminate that authorization following the conditions described in this section of the general permit. Authorization must be terminated by submitting an NOT on a form supplied by the executive director. Authorization to discharge under this general permit terminates at midnight on the day the NOT is postmarked for delivery to the TCEQ. If electronic submission of the NOT is provided, authorization to discharge under this permit terminates immediately following confirmation of receipt of the NOT by the TCEQ. Compliance with the conditions and requirements of this permit is required until an NOT is submitted.

The NOT must be submitted to TCEQ, and a copy of the NOT provided to the operator of any MS4 receiving the discharge (with a list in the SWP3 of the names and addresses of all MS4 operators receiving a copy), within 30 days after any of the following conditions are met:

(a) final stabilization has been achieved on all portions of the site that are the responsibility of the permittee;

(b) a transfer of operational control has occurred (See Section II.F.4. below); or

(c) the operator has obtained alternative authorization under an individual TPDES permit or alternative TPDES general permit.

2. Minimum Contents of the NOT

The NOT form shall require, at a minimum, the following information:

(a) if authorization was granted following submission of an NOI, the permittee's site-specific TPDES authorization number for the construction site;

(b) an indication of whether the construction activity is completed or if the permittee is simply no longer an operator at the site;

(c) the name, address, and telephone number of the permittee submitting the NOT;

(d) the name (or other identifier), address, county, and location (latitude/longitude) of the construction project or site; and

(e) a signed certification that either all stormwater discharges requiring authorization under this general permit will no longer occur, or that the applicant is no longer the operator of the facility or construction site, and that all temporary structural erosion controls have either been removed, will be removed on a schedule defined in the SWP3, or have been transferred to a new operator if the new operator has applied for permit coverage. Erosion controls that are designed to remain in place for an indefinite period, such as mulches and fiber mats, are not required to be removed or scheduled for removal.

3. Termination of Coverage for Small Construction Sites and for Secondary Operators at Large Construction Sites

Each operator that has obtained automatic authorization and has not been required to submit an NOI must remove the site notice upon meeting any of the conditions listed below, complete the applicable portion of the site notice related to removal of the site notice, and submit a copy of the completed site notice to the operator of any MS4 receiving the discharge (or provide alternative notification as allowed by the MS4 operator, with documentation of such notification included in the SWP3), within 30 days of meeting any of the following conditions:

(a) final stabilization has been achieved on all portions of the site that are the responsibility of the permittee;

(b) a transfer of operational control has occurred (See Section II.F.4. below); or

(c) the operator has obtained alternative authorization under an individual or general TPDES permit.

Authorization to discharge under this general permit terminates immediately upon removal of the applicable site notice. Compliance with the conditions and requirements of this permit is required until the site notice is removed.

4. Transfer of Operational Control

Coverage under this general permit is not transferable. A transfer of operational control includes changes to the structure of a company, such as changing from a partnership to a corporation, or changing to a different corporation type such that a different filing (or charter) number is established with the Texas Secretary of State.

When the primary operator of a large construction activity changes or operational control is transferred, the original operator must submit an NOT within ten (10) days prior to the date that responsibility for operations terminates, and the new operator must submit an NOI at least ten (10) days prior to the transfer of operational control, in accordance with condition (a) or (b) below. A copy of the NOT must be provided to the operator of any MS4 receiving the discharge in accordance with Section II.F.1. above.

Operators of regulated construction activities who are not required to submit an NOI must remove the original site notice, and the new operator must post the required site notice prior to the transfer of operational control, in accordance with condition (a) or (b) below. A copy of the completed site notice must be provided to the operator of any MS4 receiving the discharge, in accordance with Section II.F.3. above.

A transfer of operational control occurs when either of the following criteria is met:

(a) Another operator has assumed control over all areas of the site that have not been finally stabilized; and all silt fences and other temporary erosion controls have either been removed, scheduled for removal as defined in the SWP3, or transferred to a new operator, provided that the permitted operator has attempted to notify the new operator in writing of the requirement to obtain permit coverage. Record of this notification (or attempt at notification) shall be retained by the operator in accordance with Part VI of this permit. Erosion controls that are designed to remain in place for an indefinite period, such as mulches and fiber mats, are not required to be removed or scheduled for removal.

(b) A homebuilder has purchased one or more lots from an operator who obtained coverage under this general permit for a common plan of development or sale. The homebuilder is considered a new operator and shall comply with the requirements listed above, including the development of a SWP3 if necessary. Under these circumstances, the homebuilder is only responsible for compliance with the general permit requirements as they apply to lot(s) it has operational control over, and the original operator remains responsible for common controls or discharges, and must amend its SWP3 to remove the lot(s) transferred to the homebuilder.

Section G. Waivers from Coverage

The executive director may waive the otherwise applicable requirements of this general permit for stormwater discharges from small construction activities under the terms and conditions described in this section.

1. Waiver Applicability and Coverage

Operators of small construction activities may apply for and receive a waiver from the requirements to obtain authorization under this general permit, where all of the following conditions are met. This waiver from coverage does not apply to non-stormwater discharges. The operator must insure that any non-stormwater discharges are either authorized under a separate permit or authorization, or are not considered to be a wastewater.

(a) the calculated rainfall erosivity (R) factor for the entire period of the construction project is less than five (5);

(b) the operator submits to the TCEQ a signed waiver certification form, supplied by the executive director, certifying that the construction activity will commence and be completed within a period when the value of the calculated R factor is less than five (5); and

(c) the waiver certification form is postmarked for delivery to the TCEQ at least seven (7) days before construction activity begins or, if electronic filing is available, then any time following the receipt of written confirmation from TCEQ that a complete electronic application was submitted and acknowledged.

2. Steps to Obtaining a Waiver

The construction site operator may calculate the R factor to request a waiver using the following steps:

(a) Estimate the construction start date and the construction end date. The construction end date is the date that final stabilization will be achieved.

(b) Find the appropriate Erosivity Index (EI) zone in Appendix B of this permit.

(c) Find the EI percentage for the project period by adding the results for each period of the project using the table provided in Appendix D of this permit, in EPA Fact Sheet 2.1, or in USDA Handbook 703, by subtracting the start value from the end value to find the percent EI for the site.

(d) Refer to the Isoerodent Map (Appendix C of this permit) and interpolate the annual isoerodent value for the proposed construction location.

(e) Multiply the percent value obtained in Step (c) above by the annual isoerodent value obtained in Step (d). This is the R factor for the proposed project. If the value is less than 5, then a waiver may be obtained. If the value is five (5) or more, then a waiver may not be obtained, and the operator must obtain coverage under Part II.E.2. of this permit.

Alternatively, the operator may calculate a site-specific R factor utilizing the following online calculator: http://ei.tamu.edu/index.html, or using another available resource.

The waiver certification form is not required to be posted at the small construction site.

3. Effective Date of Waiver

Operators of small construction activities are provisionally waived from the otherwise applicable requirements of this general permit seven (7) days from the date that a completed waiver certification form is postmarked for delivery to TCEQ, or immediately upon receiving confirmation of approval of an electronic submittal, if electronic form submittals are available.

4. Activities Extending Beyond the Waiver Period

If a construction activity extends beyond the approved waiver period due to circumstances beyond the control of the operator, the operator must either:

(a) recalculate the R factor using the original start date and a new projected ending date, and if the R factor is still under five (5), submit a new waiver certification form at least two (2) days before the end of the original waiver period; or

(b) obtain authorization under this general permit according to the requirements delineated in either Part II.E.2. or Part II.E.3. before the end of the approved waiver period.

Section H. Alternative TPDES Permit Coverage

1. Individual Permit Alternative

Any discharge eligible for coverage under this general permit may alternatively be authorized under an individual TPDES permit according to 30 TAC §305 (relating to Consolidated Permits). Applications for individual permit coverage should be submitted at least three hundred and thirty (330) days prior to commencement of construction activities to ensure timely authorization.

2. Individual Permit Required

The executive director may suspend an authorization or deny an NOI in accordance with the procedures set forth in 30 TAC §205 (relating to General Permits for Waste Discharges), including the requirement that the executive director provide written notice to the permittee. The executive director may require an operator of a construction site, otherwise eligible for authorization under this general permit, to apply for an individual TPDES permit in the following circumstances:

(a) the conditions of an approved TMDL or TMDL I-Plan on the receiving water;

(b) the activity being determined to cause a violation of water quality standards or being found to cause, or contribute to, the loss of a designated use of surface water in the state: and

(c) any other consideration defined in 30 TAC Chapter 205 (relating to General Permits for Waste Discharges) including 30 TAC Chapter 205.4(c)(3)(D), which allows the commission to deny authorization under the general permit and require an individual permit if a discharger "has been determined by the executive director to have been out of compliance with any rule, order, or permit of the commission, including non-payment of fees assessed by the executive director."

Additionally, the executive director may cancel, revoke, or suspend authorization to discharge under this general permit based on a finding of historical and significant noncompliance with the provisions of this general permit, relating to 30 TAC §60.3 (Use of Compliance History). Denial of authorization to discharge under this general permit or suspension of a permittee's authorization under this general permit shall be done according to commission rules in 30 TAC Chapter 205 (relating to General Permits for Waste Discharges).

3. Alternative Discharge Authorization

Any discharge eligible for authorization under this general permit may alternatively be authorized under a separate general permit according to 30 TAC Chapter 205 (relating to General Permits for Waste Discharges), if applicable.

Section I. Permit Expiration

1. This general permit is effective for a term not to exceed five (5) years. All active discharge authorizations expire on the date provided on page one (1) of this permit. Following public notice and comment, as provided by 30 TAC §205.3 (relating to

Public Notice, Public Meetings, and Public Comment), the commission may amend, revoke, cancel, or renew this general permit.

2. If the executive director publishes a notice of the intent to renew or amend this general permit before the expiration date, the permit will remain in effect for existing, authorized discharges until the commission takes final action on the permit. Upon issuance of a renewed or amended permit, permittees may be required to submit an NOI within 90 days following the effective date of the renewed or amended permit, unless that permit provides for an alternative method for obtaining authorization.
3. If the commission does not propose to reissue this general permit within 90 days before the expiration date, permittees shall apply for authorization under an individual permit or an alternative general permit. If the application for an individual permit is submitted before the expiration date, authorization under this expiring general permit remains in effect until the issuance or denial of an individual permit. No new NOIs will be accepted nor new authorizations honored under the general permit after the expiration date.

Part III. Stormwater Pollution Prevention Plans (SWP3)

All regulated construction site operators shall prepare an SWP3, prior to submittal of an NOI, to address discharges authorized under Parts II.E.2. and II.E.3. of this general permit that will reach Waters of the U.S., including discharges to MS4s and privately owned separate storm sewer systems that drain to Waters of the U.S., to identify and address potential sources of pollution that are reasonably expected to affect the quality of discharges from the construction site, including off-site material storage areas, overburden and stockpiles of dirt, borrow areas, equipment staging areas, vehicle repair areas, fueling areas, etc., used solely by the permitted project. The SWP3 must describe the implementation of practices that will be used to minimize to the extent practicable the discharge of pollutants in stormwater associated with construction activity and non-stormwater discharges described in Part II.A.3., in compliance with the terms and conditions of this permit.

Individual operators at a site may develop separate SWP3s that cover only their portion of the project, provided reference is made to the other operators at the site. Where there is more than one SWP3 for a site, permittees must coordinate to ensure that BMPs and controls are consistent and do not negate or impair the effectiveness of each other. Regardless of whether a single comprehensive SWP3 is developed or separate SWP3s are developed for each operator, it is the responsibility of each operator to ensure compliance with the terms and conditions of this general permit in the areas of the construction site where that operator has control over construction plans and specifications or day-to-day operations.

Section A. Shared SWP3 Development

For more effective coordination of BMPs and opportunities for cost sharing, a cooperative effort by the different operators at a site is encouraged. Operators must independently obtain authorization, but may work together to prepare and implement a single, comprehensive SWP3 for the entire construction site.

1. The SWP3 must clearly list the name and, for large construction activities, the general permit authorization numbers, for each operator that participates in the shared SWP3. Until the TCEQ responds to receipt of the NOI with a general permit authorization number, the SWP3 must specify the date that the NOI was submitted to TCEQ by each operator. Each operator participating in the shared plan must also sign the SWP3.

2. The SWP3 must clearly indicate which operator is responsible for satisfying each shared requirement of the SWP3. If the responsibility for satisfying a requirement is not described in the plan, then each permittee is entirely responsible for meeting the requirement within the boundaries of the construction site where they perform construction activities. The SWP3 must clearly describe responsibilities for meeting each requirement in shared or common areas.
3. The SWP3 may provide that one operator is responsible for preparation of a SWP3 in compliance with the CGP, and another operator is responsible for implementation of the SWP3 at the project site.

Section B. Responsibilities of Operators

1. Secondary Operators and Primary Operators with Control Over Construction Plans and Specifications

All secondary operators and primary operators with control over construction plans and specifications shall:

(a) ensure the project specifications allow or provide that adequate BMPs are developed to meet the requirements of Part III of this general permit;

(b) ensure that the SWP3 indicates the areas of the project where they have control over project specifications, including the ability to make modifications in specifications;

(c) ensure that all other operators affected by modifications in project specifications are notified in a timely manner so that those operators may modify their BMP s as necessary to remain compliant with the conditions of this general permit; and

(d) ensure that the SWP3 for portions of the project where they are operators indicates the name and site-specific TPDES authorization number(s) for operators with the day-to-day operational control over those activities necessary to ensure compliance with the SWP3 and other permit conditions. If the party with day-to-day operational control has not been authorized or has abandoned the site, the person with control over project specifications is considered to be the responsible party until the authority is transferred to another party and the SWP3 is updated.

2. Primary Operators with Day-to-Day Operational Control

Primary operators with day-to-day operational control of those activities at a project that are necessary to ensure compliance with an SWP3 and other permit conditions must ensure that the SWP3 accomplishes the following requirements:

(a) meets the requirements of this general permit for those portions of the project where they are operators;

(b) identifies the parties responsible for implementation of BMPs described in the SWP3;

(c) indicates areas of the project where they have operational control over day-to-day activities; and

(d) includes, for areas where they have operational control over day-to-day activities, the name and site-specific TPDES authorization number of the parties with control over project specifications, including the ability to make modifications in specifications.

Section C. Deadlines for SWP3 Preparation, Implementation, and Compliance

The SWP3 must be prepared prior to obtaining authorization under this general permit, and implemented prior to commencing construction activities that result in soil

disturbance. The SWP3 must be prepared so that it provides for compliance with the terms and conditions of this general permit.

Section D. Plan Review and Making Plans Available

1. The SWP3 must be retained on-site at the construction site or, if the site is inactive or does not have an on-site location to store the plan, a notice must be posted describing the location of the SWP3. The SWP3 must be made readily available at the time of an on-site inspection to: the executive director; a federal, state, or local agency approving sediment and erosion plans, grading plans, or stormwater management plans; local government officials; and the operator of a municipal separate storm sewer receiving discharges from the site. If the SWP3 is retained off-site, then it shall be made available as soon as reasonably possible. In most instances, it is reasonable that the SWP3 shall be made available within 24 hours of the request.
2. A primary operator of a large construction activity must post the TCEQ site notice near the main entrance of the construction site. An operator of a small construction activity seeking authorization under this general permit and a secondary operator of a large construction activity must post the TCEQ site notice required in Part II.E.1., 2., or 3. of this general permit in order to obtain authorization. If the construction project is a linear construction project, such as a pipeline or highway, the notices must be placed in a publicly accessible location near where construction is actively underway. Notices for these linear sites may be relocated, as necessary, along the length of the project. The notices must be readily available for viewing by the general public; local, state, and federal authorities; and contain the following information:
   (a) the site-specific TPDES authorization number for the project if assigned;
   (b) the operator name, contact name, and contact phone number;
   (c) a brief description of the project; and
   (d) the location of the SWP3.
3. This permit does not provide the general public with any right to trespass on a construction site for any reason, including inspection of a site; nor does this permit require that permittees allow members of the general public access to a construction site.

Section E. Revisions and Updates to SWP3s

The permittee must revise or update the SWP3 whenever the following occurs:

1. a change in design, construction, operation, or maintenance that has a significant effect on the discharge of pollutants and that has not been previously addressed in the SWP3;
2. changing site conditions based on updated plans and specifications, new operators, new areas of responsibility, and changes in BMPs; or
3. results of inspections or investigations by site operators, operators of a municipal separate storm sewer system receiving the discharge, authorized TCEQ personnel, or a federal, state or local agency approving sediment and erosion plans indicate the SWP3 is proving ineffective in eliminating or significantly minimizing pollutants in discharges authorized under this general permit.

Section F. Contents of SWP3

The SWP3 must include, at a minimum, the information described in this section and must comply with the construction and development effluent guidelines in Part III, Section G of the general permit.

1. A site or project description, which includes the following information:

   (a) a description of the nature of the construction activity;

   (b) a list of potential pollutants and their sources;

   (c) a description of the intended schedule or sequence of activities that will disturb soils for major portions of the site, including estimated start dates and duration of activities;

   (d) the total number of acres of the entire property and the total number of acres where construction activities will occur, including off-site material storage areas, overburden and stockpiles of dirt, and borrow areas that are authorized under the permittee's NOI;

   (e) data describing the soil or the quality of any discharge from the site;

   (f) a map showing the general location of the site (e.g. a portion of a city or county map);

   (g) a detailed site map (or maps) indicating the following:

      (i) drainage patterns and approximate slopes anticipated after major grading activities;

      (ii) areas where soil disturbance will occur;

      (iii) locations of all controls and buffers, either planned or in place;

      (iv) locations where temporary or permanent stabilization practices are expected to be used;

      (v) locations of construction support activities, including off-site activities, that are authorized under the permittee's NOI, including material, waste, borrow, fill, or equipment or chemical storage areas;

      (vi) surface waters (including wetlands) either at, adjacent, or in close proximity to the site, and also indicating those that are impaired waters;

      (vii) locations where stormwater discharges from the site directly to a surface water body or a municipal separate storm sewer system;

      (viii) vehicle wash areas; and

      (ix) designated points on the site where vehicles will exit onto paved roads (for instance, this applies to construction transition from unstable dirt areas to exterior paved roads).

      Where the amount of information required to be included on the map would result in a single map being difficult to read and interpret, the operator shall develop a series of maps that collectively include the required information.

   (h) the location and description of support activities authorized under the permittee's NOI, including asphalt plants, concrete plants, and other activities providing support to the construction site that is authorized under this general permit;

   (i) the name of receiving waters at or near the site that may be disturbed or that may receive discharges from disturbed areas of the project;

   (j) a copy of this TPDES general permit;

   (k) the NOI and acknowledgement certificate for primary operators of large construction sites, and the site notice for small construction sites and for secondary operators of large construction sites;

   (l) stormwater and allowable non-stormwater discharge locations, including storm drain inlets on site and in the immediate vicinity of the construction site; and

(m) locations of all pollutant-generating activities, such as paving operations; concrete, paint and stucco washout and water disposal; solid waste storage and disposal; and dewatering operations.

2. A description of the BMPs that will be used to minimize pollution in runoff.

The description must identify the general timing or sequence for implementation. At a minimum, the description must include the following components:

(a) General Requirements

(i) Erosion and sediment controls must be designed to retain sediment on-site to the extent practicable with consideration for local topography, soil type, and rainfall.

(ii) Control measures must be properly selected, installed, and maintained according to the manufacturer's or designer's specifications.

(iii) Controls must be developed to minimize the offsite transport of litter, construction debris, and construction materials.

(b) Erosion Control and Stabilization Practices

The SWP3 must include a description of temporary and permanent erosion control and stabilization practices for the site, compliant with the requirements of Part III.G.1 and G.2 of this general permit, including a schedule of when the practices will be implemented. Site plans should ensure that existing vegetation is preserved where it is possible.

(i) Erosion control and stabilization practices may include but are not limited to: establishment of temporary or permanent vegetation, mulching, geotextiles, sod stabilization, vegetative buffer strips, protection of existing trees and vegetation, slope texturing, temporary velocity dissipation devices, flow diversion mechanisms, and other similar measures.

(ii) The following records must be maintained and either attached to or referenced in the SWP3, and made readily available upon request to the parties listed in Part III.D.1 of this general permit:

(A) the dates when major grading activities occur;

(B) the dates when construction activities temporarily or permanently cease on a portion of the site; and

(C) the dates when stabilization measures are initiated.

(iii) Erosion control and stabilization measures must be initiated immediately in portions of the site where construction activities have temporarily ceased and will not resume for a period exceeding 14 calendar days. Stabilization measures that provide a protective cover must be initiated immediately in portions of the site where construction activities have permanently ceased. The term "immediately" is used to define the deadline for initiating stabilization measures. In the context of this requirement, "immediately" means as soon as practicable, but no later than the end of the next work day, following the day when the earth-disturbing activities have temporarily or permanently ceased. Except as provided in (A) through (D) below, these measures must be completed as soon as practicable, but no more than 14 calendar days after the initiation of soil stabilization measures:

(A) Where the immediate initiation of stabilization measures after construction activity temporarily or permanently ceased is precluded

by snow cover or frozen ground conditions, stabilization measures must be initiated as soon as practicable.

(B) In arid areas, semi-arid areas, or drought-stricken areas where the immediate initiation of stabilization measures after construction activity has temporarily or permanently ceased or is precluded by arid conditions, erosion control and stabilization measures must be initiated as soon as practicable. Where vegetative controls are not feasible due to arid conditions, the operator shall immediately install, and within 14 calendar days of a temporary or permanent cessation of work in any portion of the site complete, non-vegetative erosion controls. If non-vegetative controls are not feasible, the operator shall install temporary sediment controls as required in Paragraph (C) below.

(C) In areas where temporary stabilization measures are infeasible, the operator may alternatively utilize temporary perimeter controls. The operator must document in the SWP3 the reason why stabilization measures are not feasible, and must demonstrate that the perimeter controls will retain sediment on site to the extent practicable. The operator must continue to inspect the BMPs at the frequency established in Section III.F.7.(a) for unstabilized sites.

(D) If the initiation or completion of vegetative stabilization is affected by circumstances beyond the control of the permittee, vegetative stabilization must be initiated or completed as soon as conditions or circumstances allow it on the site. The requirement to initiate stabilization is triggered as soon as it is known with reasonable certainty that work will be stopped for 14 or more additional calendar days.

(iv) Final stabilization must be achieved prior to termination of permit coverage.

(v) TCEQ does not expect that temporary or permanent stabilization measures to be applied to areas that are intended to be left un-vegetated or un-stabilized following construction (e.g., dirt access roads, utility pole pads, areas being used for storage of vehicles, equipment, or materials).

(c) Sediment Control Practices

The SWP3 must include a description of any sediment control practices used to remove eroded soils from stormwater runoff, including the general timing or sequence for implementation of controls.

(i) Sites With Drainage Areas of Ten or More Acres

(A) Sedimentation Basin(s)

(1) A sedimentation basin is required, where feasible, for a common drainage location that serves an area with ten (10) or more acres disturbed at one time. A sedimentation basin may be temporary or permanent, and must provide sufficient storage to contain a calculated volume of runoff from a 2-year, 24-hour storm from each disturbed acre drained. When calculating the volume of runoff from a 2-year, 24-hour storm event, it is not required to include the flows from offsite areas and flow from onsite areas that are either undisturbed or have already undergone permanent stabilization, if these flows are diverted around both the disturbed areas of the site and the sediment basin. Capacity calculations shall be included in the SWP3.

(2) Where rainfall data is not available or a calculation cannot be performed, the sedimentation basin must provide at least 3,600 cubic feet of storage per acre drained until final stabilization of the site.

(3) If a sedimentation basin is not feasible, then the permittee shall provide equivalent control measures until final stabilization of the site. In determining whether installing a sediment basin is feasible, the permittee may consider factors such as site soils, slope, available area, public safety, precipitation patterns, site geometry, site vegetation, infiltration capacity, geotechnical factors, depth to groundwater, and other similar considerations. The permittee shall document the reason that the sediment basins are not feasible, and shall utilize equivalent control measures, which may include a series of smaller sediment basins.

(4) Unless infeasible, when discharging from sedimentation basins and impoundments, the permittee shall utilize outlet structures that withdraw water from the surface.

(B) Perimeter Controls: At a minimum, silt fences, vegetative buffer strips, or equivalent sediment controls are required for all down slope boundaries of the construction area, and for those side slope boundaries deemed appropriate as dictated by individual site conditions.

(ii) Controls for Sites With Drainage Areas Less than Ten Acres:

(A) Sediment traps and sediment basins may be used to control solids in stormwater runoff for drainage locations serving less than ten (10) acres. At a minimum, silt fences, vegetative buffer strips, or equivalent sediment controls are required for all down slope boundaries of the construction area, and for those side slope boundaries deemed appropriate as dictated by individual site conditions.

(B) Alternatively, a sediment basin that provides storage for a calculated volume of runoff from a 2-year, 24-hour storm from each disturbed acre drained may be utilized. Where rainfall data is not available or a calculation cannot be performed, a temporary or permanent sediment basin providing 3,600 cubic feet of storage per acre drained may be provided. If a calculation is performed, then the calculation shall be included in the SWP3.

(C) If sedimentation basins or impoundments are used, the permittee shall comply with the requirements in Part III.G.6 of this general permit.

3. Description of Permanent Stormwater Controls

A description of any measures that will be installed during the construction process to control pollutants in stormwater discharges that may occur after construction operations have been completed must be included in the SWP3. Permittees are only responsible for the installation and maintenance of stormwater management measures prior to final stabilization of the site or prior to submission of an NOT.

4. Other Required Controls and BMPs

(a) Permittees shall minimize, to the extent practicable, the off-site vehicle tracking of sediments and the generation of dust. The SWP3 shall include a description of controls utilized to accomplish this requirement.

(b) The SWP3 must include a description of construction and waste materials expected to be stored on-site and a description of controls to minimize pollutants from these materials.

(c) The SWP3 must include a description of potential pollutant sources from areas other than construction (such as stormwater discharges from dedicated asphalt plants and dedicated concrete batch plants), and a description of controls and measures that will be implemented at those sites to minimize pollutant discharges.

(d) Permittees shall place velocity dissipation devices at discharge locations and along the length of any outfall channel (i.e., runoff conveyance) to provide a non-erosive flow velocity from the structure to a water course, so that the natural physical and biological characteristics and functions are maintained and protected.

(e) Permittees shall design and utilize appropriate controls to minimize the offsite transport of suspended sediments and other pollutants if it is necessary to pump or channel standing water from the site.

(f) Permittees shall ensure that all other required controls and BMPs comply with all of the requirements of Part III.G of this general permit.

5. Documentation of Compliance with Approved State and Local Plans

(a) Permittees must ensure that the SWP3 is consistent with requirements specified in applicable sediment and erosion site plans or site permits, or stormwater management site plans or site permits approved by federal, state, or local officials.

(b) SWP3s must be updated as necessary to remain consistent with any changes applicable to protecting surface water resources in sediment erosion site plans or site permits, or stormwater management site plans or site permits approved by state or local official for which the permittee receives written notice.

(c) If the permittee is required to prepare a separate management plan, including but not limited to a WPAP or Contributing Zone Plan in accordance with 30 TAC Chapter 213 (related to the Edwards Aquifer), then a copy of that plan must be either included in the SWP3 or made readily available upon request to authorized personnel of the TCEQ. The permittee shall maintain a copy of the approval letter for the plan in its SWP3.

6. Maintenance Requirements

(a) All protective measures identified in the SWP3 must be maintained in effective operating condition. If, through inspections or other means, the permittee determines that BMPs are not operating effectively, then the permittee shall perform maintenance as necessary to maintain the continued effectiveness of stormwater controls, and prior to the next rain event if feasible. If maintenance prior to the next anticipated storm event is impracticable, the reason shall be documented in the SWP3 and maintenance must be scheduled and accomplished as soon as practicable. Erosion and sediment controls that have been intentionally disabled, run-over, removed, or otherwise rendered ineffective must be replaced or corrected immediately upon discovery.

(b) If periodic inspections or other information indicates a control has been used incorrectly, is performing inadequately, or is damaged, then the operator shall replace or modify the control as soon as practicable after making the discovery.

(c) Sediment must be removed from sediment traps and sedimentation ponds no later than the time that design capacity has been reduced by 50%. For perimeter

controls such as silt fences, berms, etc., the trapped sediment must be removed before it reaches 50% of the above-ground height.

(d) If sediment escapes the site, accumulations must be removed at a frequency that minimizes off-site impacts, and prior to the next rain event, if feasible. If the permittee does not own or operate the off-site conveyance, then the permittee shall work with the owner or operator of the property to remove the sediment.

7. Inspections of Controls

(a) Personnel provided by the permittee must inspect disturbed areas of the construction site that have not been finally stabilized, areas used for storage of materials that are exposed to precipitation, discharge locations, and structural controls for evidence of, or the potential for, pollutants entering the drainage system. Personnel conducting these inspections must be knowledgeable of this general permit, familiar with the construction site, and knowledgeable of the SWP3 for the site. Sediment and erosion control measures identified in the SWP3 must be inspected to ensure that they are operating correctly. Locations where vehicles enter or exit the site must be inspected for evidence of off-site sediment tracking. Inspections must be conducted at least once every 14 calendar days and within 24 hours of the end of a storm event of 0.5 inches or greater.

Where sites have been finally or temporarily stabilized or where runoff is unlikely due to winter conditions (e.g. site is covered with snow, ice, or frozen ground exists), inspections must be conducted at least once every month. In arid, semi-arid, or drought-stricken areas, inspections must be conducted at least once every month and within 24 hours after the end of a storm event of 0.5 inches or greater. The SWP3 must also contain a record of the total rainfall measured, as well as the approximate beginning and ending dates of winter or drought conditions resulting in monthly frequency of inspections.

As an alternative to the above-described inspection schedule of once every 14 calendar days and within 24 hours of a storm event of 0.5 inches or greater, the SWP3 may be developed to require that these inspections will occur at least once every seven (7) calendar days. If this alternative schedule is developed, then the inspection must occur regardless of whether or not there has been a rainfall event since the previous inspection.

The inspections may occur on either schedule provided that the SWP3 reflects the current schedule and that any changes to the schedule are conducted in accordance with the following provisions: the schedule may be changed a maximum of one time each month, the schedule change must be implemented at the beginning of a calendar month, and the reason for the schedule change must be documented in the SWP3 (e.g., end of “dry” season and beginning of “wet” season).

(b) Utility line installation, pipeline construction, and other examples of long, narrow, linear construction activities may provide inspection personnel with limited access to the areas described in Part III.F.7.(a) above. Inspection of these areas could require that vehicles compromise temporarily or even permanently stabilized areas, cause additional disturbance of soils, and increase the potential for erosion. In these circumstances, controls must be inspected at least once every 14 calendar days and within 24 hours of the end of a storm event of 0.5 inches or greater, but representative inspections may be performed. For representative inspections, personnel must inspect controls along the construction site for 0.25 mile above and below each access point where a roadway, undisturbed right-of-way, or other similar feature intersects the construction site and allows access to the areas described in Part III.F.7.(a)

above. The conditions of the controls along each inspected 0.25 mile portion may be considered as representative of the condition of controls along that reach extending from the end of the 0.25 mile portion to either the end of the next 0.25 mile inspected portion, or to the end of the project, whichever occurs first.

As an alternative to the above-described inspection schedule of once every 14 calendar days and within 24 hours of a storm event of 0.5 inches or greater, the SWP3 may be developed to require that these inspections will occur at least once every seven (7) calendar days. If this alternative schedule is developed, the inspection must occur regardless of whether or not there has been a rainfall event since the previous inspection. The inspections may occur on either schedule provided that the SWP3 reflects the current schedule and that any changes to the schedule are conducted in accordance with the following provisions: the schedule may be changed a maximum of one time each month, the schedule change must be implemented at the beginning of a calendar month, and the reason for the schedule change must be documented in the SWP3 (e.g., end of "dry" season and beginning of "wet" season).

(c) In the event of flooding or other uncontrollable situations which prohibit access to the inspection sites, inspections must be conducted as soon as access is practicable.

(d) The SWP3 must be modified based on the results of inspections, as necessary, to better control pollutants in runoff. Revisions to the SWP3 must be completed within seven (7) calendar days following the inspection. If existing BMPs are modified or if additional BMPs are necessary, an implementation schedule must be described in the SWP3 and wherever possible those changes implemented before the next storm event. If implementation before the next anticipated storm event is impracticable, these changes must be implemented as soon as practicable.

(e) A report summarizing the scope of the inspection, the date(s) of the inspection, and major observations relating to the implementation of the SWP3 must be made and retained as part of the SWP3. Major observations should include: The locations of discharges of sediment or other pollutants from the site; locations of BMPs that need to be maintained; locations of BMPs that failed to operate as designed or proved inadequate for a particular location; and locations where additional BMPs are needed.

Actions taken as a result of inspections must be described within, and retained as a part of, the SWP3. Reports must identify any incidents of non-compliance. Where a report does not identify any incidents of non-compliance, the report must contain a certification that the facility or site is in compliance with the SWP3 and this permit. The report must be signed by the person and in the manner required by 30 TAC §305.128 (relating to Signatories to Reports).

The names and qualifications of personnel making the inspections for the permittee may be documented once in the SWP3 rather than being included in each report.

8. The SWP3 must identify and ensure the implementation of appropriate pollution prevention measures for all eligible non-stormwater components of the discharge, as listed in Part II.A.3. of this permit.

9. The SWP3 must include the information required in Part III.B. of this general permit.

10. The SWP3 must include pollution prevention procedures that comply with Part III.G.4 of this general permit.

Section G. Erosion and Sediment Control Requirements Applicable to All Sites

Except as provided in 40 CFR §§125.30-125.32, any discharge regulated under this general permit, with the exception of sites that obtained waivers based on low rainfall erosivity, must achieve, at a minimum, the following effluent limitations representing the degree of effluent reduction attainable by application of the best practicable control technology currently available (BPT).

1. *Erosion and sediment controls*. Design, install, and maintain effective erosion controls and sediment controls to minimize the discharge of pollutants. At a minimum, such controls must be designed, installed, and maintained to:

   (a) Control stormwater volume and velocity within the site to minimize soil erosion;

   (b) If any stormwater flow will be channelized at the site, stormwater controls must be designed to control both peak flowrates and total stormwater volume to minimize erosion at outlets and to minimize downstream channel and streambank erosion;

   (c) Minimize the amount of soil exposed during construction activity;

   (d) Minimize the disturbance of steep slopes;

   (e) Minimize sediment discharges from the site. The design, installation, and maintenance of erosion and sediment controls must address factors such as the amount, frequency, intensity and duration of precipitation, the nature of resulting stormwater runoff, and soil characteristics, including the range of soil particle sizes expected to be present on the site;

   (f) If earth disturbance activities are located in close proximity to a surface water, provide and maintain appropriate natural buffers if feasible and as necessary, around surface waters, depending on site-specific topography, sensitivity, and proximity to water bodies. Direct stormwater to vegetated areas to increase sediment removal and maximize stormwater infiltration. If providing buffers is infeasible, the permittee shall document the reason that natural buffers are not feasible, and shall implement additional erosion and sediment controls to reduce sediment load;

   (g) Preserve native topsoil at the site, unless infeasible; and

   (h) Minimize soil compaction in post-construction pervious areas. In areas of the construction site where final vegetative stabilization will occur or where infiltration practices will be installed, either:

      (1) restrict vehicle and equipment use to avoid soil compaction; or

      (2) prior to seeding or planting areas of exposed soil that have been compacted, use techniques that condition the soils to support vegetative growth, if necessary and feasible;

   (i) TCEQ does not consider stormwater control features (e.g., stormwater conveyance channels, storm drain inlets, sediment basins) to constitute “surface waters” for the purposes of triggering the buffer requirement in Part III.G.(f) above.

2. *Soil stabilization*. Stabilization of disturbed areas must, at a minimum, be initiated immediately whenever any clearing, grading, excavating, or other earth disturbing activities have permanently ceased on any portion of the site, or temporarily ceased on any portion of the site and will not resume for a period exceeding 14 calendar days. In the context of this requirement, “immediately” means as soon as practicable, but no later than the end of the next work day, following the day when the earth-disturbing activities have temporarily or permanently ceased. Temporary

stabilization must be completed no more than 14 calendar days after initiation of soil stabilization measures, and final stabilization must be achieved prior to termination of permit coverage. In arid, semi-arid, and drought-stricken areas where initiating vegetative stabilization measures immediately is infeasible, alternative non-vegetative stabilization measures must be employed as soon as practicable. Refer to Part III.F.2.(b) for complete erosion control and stabilization practice requirements.

3. *Dewatering*. Discharges from dewatering activities, including discharges from dewatering of trenches and excavations, are prohibited, unless managed by appropriate controls.
4. *Pollution prevention measures*. Design, install, implement, and maintain effective pollution prevention measures to minimize the discharge of pollutants. At a minimum, such measures must be designed, installed, implemented, and maintained to:
   (a) Minimize the discharge of pollutants from equipment and vehicle washing, wheel wash water, and other wash waters. Wash waters must be treated in a sediment basin or alternative control that provides equivalent or better treatment prior to discharge;
   (b) Minimize the exposure of building materials, building products, construction wastes, trash, landscape materials, fertilizers, pesticides, herbicides, detergents, sanitary waste, and other materials present on the site to precipitation and to stormwater; and
   (c) Minimize the discharge of pollutants from spills and leaks, and implement chemical spill and leak prevention and response procedures.
5. *Prohibited discharges*. The following discharges are prohibited:
   (a) Wastewater from wash out of concrete trucks, unless managed by an appropriate control (see Part V of the general permit);
   (b) Wastewater from wash out and cleanout of stucco, paint, form release oils, curing compounds and other construction materials;
   (c) Fuels, oils, or other pollutants used in vehicle and equipment operation and maintenance; and
   (d) Soaps or solvents used in vehicle and equipment washing.
6. *Surface outlets*. When discharging from basins and impoundments, utilize outlet structures that withdraw water from the surface, unless infeasible.

Part IV. Stormwater Runoff from Concrete Batch Plants

Discharges of stormwater runoff from concrete batch plants at regulated construction sites may be authorized under the provisions of this general permit provided that the following requirements are met for concrete batch plant(s) authorized under this permit. If discharges of stormwater runoff from concrete batch plants are not covered under this general permit, then discharges must be authorized under an alternative general permit or individual permit. This permit does not authorize the discharge or land disposal of any wastewater from concrete batch plants at regulated construction sites. Authorization for these wastes must be obtained under an individual permit or an alternative general permit.

Section A. Benchmark Sampling Requirements

1. Operators of concrete batch plants authorized under this general permit shall sample the stormwater runoff from the concrete batch plants according to the requirements

of this section of this general permit, and must conduct evaluations on the effectiveness of the SWP3 based on the following benchmark monitoring values:

Table 1. Benchmark Parameters

Benchmark Parameter	Benchmark Value	Sampling Frequency	Sample Type
Oil and Grease	15 mg/L	1/quarter (*1) (*2)	Grab (*3)
Total Suspended Solids	100 mg/L	1/quarter (*1) (*2)	Grab (*3)
pH	6.0 – 9.0 Standard Units	1/quarter (*1) (*2)	Grab (*3)
Total Iron	1.3 mg/L	1/quarter (*1) (*2)	Grab (*3)

(*1) When discharge occurs. Sampling is required within the first 30 minutes of discharge. If it is not practicable to take the sample, or to complete the sampling, within the first 30 minutes, sampling must be completed within the first hour of discharge. If sampling is not completed within the first 30 minutes of discharge, the reason must be documented and attached to all required reports and records of the sampling activity.

(*2) Sampling must be conducted at least once during each of the following periods. The first sample must be collected during the first full quarter that a stormwater discharge occurs from a concrete batch plant authorized under this general permit.

January through March

April through June

July through September

October through December

For projects lasting less than one full quarter, a minimum of one sample shall be collected, provided that a stormwater discharge occurred at least once following submission of the NOI or following the date that automatic authorization was obtained under Section II.E.2., and prior to terminating coverage.

(*3) A grab sample shall be collected from the stormwater discharge resulting from a storm event that is at least 0.1 inches of measured precipitation that occurs at least 72 hours from the previously measurable storm event. The sample shall be collected downstream of the concrete batch plant, and where the discharge exits any BMPs utilized to handle the runoff from the batch plant, prior to commingling with any other water authorized under this general permit.

2. The permittee must compare the results of sample analyses to the benchmark values above, and must include this comparison in the overall assessment of the SWP3's effectiveness. Analytical results that exceed a benchmark value are not a violation of this permit, as these values are not numeric effluent limitations. Results of analyses are indicators that modifications of the SWP3 should be assessed and may be necessary to protect water quality. The operator must investigate the cause for each exceedance and must document the results of this investigation in the SWP3 by the end of the quarter following the sampling event.

The operator's investigation must identify the following:

(a) any additional potential sources of pollution, such as spills that might have occurred,

(b) necessary revisions to good housekeeping measures that are part of the SWP3,

(c) additional BMPs, including a schedule to install or implement the BMPs, and

(d) other parts of the SWP3 that may require revisions in order to meet the goal of the benchmark values.

Background concentrations of specific pollutants may also be considered during the investigation. If the operator is able to relate the cause of the exceedance to background concentrations, then subsequent exceedances of benchmark values for that pollutant may be resolved by referencing earlier findings in the SWP3. Background concentrations may be identified by laboratory analyses of samples of stormwater runon to the permitted facility, by laboratory analyses of samples of stormwater run-off from adjacent non-industrial areas, or by identifying the pollutant is a naturally occurring material in soils at the site.

Section B. Best Management Practices (BMPs) and SWP3 Requirements

Minimum SWP3 Requirements – The following are required in addition to other SWP3 requirements listed in this general permit (including, but not limited to Part III.F.7. of this permit):

1. Description of Potential Pollutant Sources - The SWP3 must provide a description of potential sources (activities and materials) that may reasonably be expected to affect the quality of stormwater discharges associated with concrete batch plants authorized under this permit. The SWP3 must describe practices that that will be used to reduce the pollutants in these discharges to assure compliance with this general permit, including the protection of water quality, and must ensure the implementation of these practices.

   The following must be developed, at a minimum, in support of developing this description:

   (a) Drainage – The site map must include the following information:

      (1) the location of all outfalls for stormwater discharges associated with concrete batch plants that are authorized under this permit;

      (2) a depiction of the drainage area and the direction of flow to the outfall(s);

      (3) structural controls used within the drainage area(s);

      (4) the locations of the following areas associated with concrete batch plants that are exposed to precipitation: vehicle and equipment maintenance activities (including fueling, repair, and storage areas for vehicles and equipment scheduled for maintenance); areas used for the treatment, storage, or disposal of wastes; liquid storage tanks; material processing and storage areas; and loading and unloading areas; and

      (5) the locations of the following: any bag house or other dust control device(s); recycle/sedimentation pond, clarifier or other device used for the treatment of facility wastewater (including the areas that drain to the treatment device); areas with significant materials; and areas where major spills or leaks have occurred.

   (b) Inventory of Exposed Materials – A list of materials handled at the concrete batch plant that may be exposed to stormwater and that have a potential to

affect the quality of stormwater discharges associated with concrete batch plants that are authorized under this general permit.

(c) Spills and Leaks - A list of significant spills and leaks of toxic or hazardous pollutants that occurred in areas exposed to stormwater and that drain to stormwater outfalls associated with concrete batch plants authorized under this general permit must be developed, maintained, and updated as needed.

(d) Sampling Data - A summary of existing stormwater discharge sampling data must be maintained, if available.

2. Measures and Controls - The SWP3 must include a description of management controls to regulate pollutants identified in the SWP3's "Description of Potential Pollutant Sources" from Part IV.B.1.(a) of this permit, and a schedule for implementation of the measures and controls. This must include, at a minimum:

(a) Good Housekeeping - Good housekeeping measures must be developed and implemented in the area(s) associated with concrete batch plants.

(1) Operators must prevent or minimize the discharge of spilled cement, aggregate (including sand or gravel), settled dust, or other significant materials from paved portions of the site that are exposed to stormwater. Measures used to minimize the presence of these materials may include regular sweeping or other equivalent practices. These practices must be conducted at a frequency that is determined based on consideration of the amount of industrial activity occurring in the area and frequency of precipitation, and shall occur at least once per week when cement or aggregate is being handled or otherwise processed in the area.

(2) Operators must prevent the exposure of fine granular solids, such as cement, to stormwater. Where practicable, these materials must be stored in enclosed silos, hoppers or buildings, in covered areas, or under covering.

(b) Spill Prevention and Response Procedures - Areas where potential spills that can contribute pollutants to stormwater runoff, and the drainage areas from these locations, must be identified in the SWP3. Where appropriate, the SWP3 must specify material handling procedures, storage requirements, and use of equipment. Procedures for cleaning up spills must be identified in the SWP3 and made available to the appropriate personnel.

(c) Inspections - Qualified facility personnel (i.e., a person or persons with knowledge of this general permit, the concrete batch plant, and the SWP3 related to the concrete batch plant(s) for the site) must be identified to inspect designated equipment and areas of the facility specified in the SWP3. The inspection frequency must be specified in the SWP3 based upon a consideration of the level of concrete production at the facility, but must be a minimum of once per month while the facility is in operation. The inspection must take place while the facility is in operation and must, at a minimum, include all areas that are exposed to stormwater at the site, including material handling areas, above ground storage tanks, hoppers or silos, dust collection/containment systems, truck wash down and equipment cleaning areas. Follow-up procedures must be used to ensure that appropriate actions are taken in response to the inspections. Records of inspections must be maintained and be made readily available for inspection upon request.

(d) Employee Training - An employee training program must be developed to educate personnel responsible for implementing any component of the SWP3, or personnel otherwise responsible for stormwater pollution prevention, with the provisions of the SWP3. The frequency of training must be documented in

the SWP3, and at a minimum, must consist of one training prior to the initiation of operation of the concrete batch plant.

(e) Record Keeping and Internal Reporting Procedures - A description of spills and similar incidents, plus additional information that is obtained regarding the quality and quantity of stormwater discharges, must be included in the SWP3. Inspection and maintenance activities must be documented and records of those inspection and maintenance activities must be incorporated in the SWP3.

(f) Management of Runoff - The SWP3 shall contain a narrative consideration for reducing the volume of runoff from concrete batch plants by diverting runoff or otherwise managing runoff, including use of infiltration, detention ponds, retention ponds, or reusing of runoff.

3. Comprehensive Compliance Evaluation – At least once per year, one or more qualified personnel (i.e., a person or persons with knowledge of this general permit, the concrete batch plant, and the SWP3 related to the concrete batch plant(s) for the site) shall conduct a compliance evaluation of the plant. The evaluation must include the following.

(a) Visual examination of all areas draining stormwater associated with regulated concrete batch plants for evidence of, or the potential for, pollutants entering the drainage system. These include but are not limited to: cleaning areas, material handling areas, above ground storage tanks, hoppers or silos, dust collection/containment systems, and truck wash down and equipment cleaning areas. Measures implemented to reduce pollutants in runoff (including structural controls and implementation of management practices) must be evaluated to determine if they are effective and if they are implemented in accordance with the terms of this permit and with the permittee's SWP3. The operator shall conduct a visual inspection of equipment needed to implement the SWP3, such as spill response equipment.

(b) Based on the results of the evaluation, the following must be revised as appropriate within two weeks of the evaluation: the description of potential pollutant sources identified in the SWP3 (as required in Part IV.B.1., "Description of Potential Pollutant Sources"); and pollution prevention measures and controls identified in the SWP3 (as required in Part IV.B.2., "Measures and Controls"). The revisions may include a schedule for implementing the necessary changes.

(c) The permittee shall prepare and include in the SWP3 a report summarizing the scope of the evaluation, the personnel making the evaluation, the date(s) of the evaluation, major observations relating to the implementation of the SWP3, and actions taken in response to the findings of the evaluation. The report must identify any incidents of noncompliance. Where the report does not identify incidences of noncompliance, the report must contain a statement that the evaluation did not identify any incidence(s), and the report must be signed according to 30 TAC §305.128, relating to Signatories to Reports.

(d) The Comprehensive Compliance Evaluation may substitute for one of the required inspections delineated in Part IV.B.2.(c) of this general permit.

Section C. Prohibition of Wastewater Discharges

Wastewater discharges associated with concrete production including wastewater disposal by land application are not authorized under this general permit. These wastewater discharges must be authorized under an alternative TCEQ water quality permit or otherwise disposed of in an authorized manner. Discharges of concrete truck wash out at construction sites may be authorized if conducted in accordance with the requirements of Part V of this general permit.

Part V. Concrete Truck Wash Out Requirements

This general permit authorizes the wash out of concrete trucks at construction sites regulated under Sections II.E.1., 2., and 3. of this general permit, provided the following requirements are met. Authorization is limited to the land disposal of wash out water from concrete trucks. Any other direct discharge of concrete production waste water must be authorized under a separate TCEQ general permit or individual permit.

1. Direct discharge of concrete truck wash out water to surface water in the state, including discharge to storm sewers, is prohibited by this general permit.
2. Concrete truck wash out water shall be discharged to areas at the construction site where structural controls have been established to prevent direct discharge to surface waters, or to areas that have a minimal slope that allow infiltration and filtering of wash out water to prevent direct discharge to surface waters. Structural controls may consist of temporary berms, temporary shallow pits, temporary storage tanks with slow rate release, or other reasonable measures to prevent runoff from the construction site.
3. Wash out of concrete trucks during rainfall events shall be minimized. The direct discharge of concrete truck wash out water is prohibited at all times, and the operator shall insure that its BMPs are sufficient to prevent the discharge of concrete truck wash out as the result of rainfall or stormwater runoff.
4. The discharge of wash out water must not cause or contribute to groundwater contamination.
5. If a SWP3 is required to be implemented, the SWP3 shall include concrete wash out areas on the associated site map.

Part VI. Retention of Records

The permittee must retain the following records for a minimum period of three (3) years from the date that a NOT is submitted as required by Part II.E.3. For activities in which an NOT is not required, records shall be retained for a minimum period of three (3) years from the date that the operator terminates coverage under Section II.F.3. of this permit. Records include:

1. A copy of the SWP3;
2. All reports and actions required by this permit, including a copy of the construction site notice;
3. All data used to complete the NOI, if an NOI is required for coverage under this general permit; and
4. All records of submittal of forms submitted to the operator of any MS4 receiving the discharge and to the secondary operator of a large construction site, if applicable.

Part VII. Standard Permit Conditions

1. The permittee has a duty to comply with all permit conditions. Failure to comply with any permit condition is a violation of the permit and statutes under which it was issued, and is grounds for enforcement action, for terminating, revoking, or denying coverage under this general permit, or for requiring a discharger to apply for and obtain an individual TPDES permit.
2. Authorization under this general permit may be suspended or revoked for cause. Filing a notice of planned changes or anticipated non-compliance by the permittee does not stay any permit condition. The permittee must furnish to the executive director, upon request and within a reasonable time, any information necessary for the executive director to determine whether cause exists for revoking, suspending, or

terminating authorization under this permit. Additionally, the permittee must provide to the executive director, upon request, copies of all records that the permittee is required to maintain as a condition of this general permit.

3. It is not a defense for a discharger in an enforcement action that it would have been necessary to halt or reduce the permitted activity to maintain compliance with the permit conditions.
4. Inspection and entry shall be allowed under TWC Chapters 26-28, Texas Health and Safety Code §§361.032-361.033 and 361.037, and 40 CFR §122.41(i). The statement in TWC §26.014 that commission entry of a facility shall occur according to an establishment's rules and regulations concerning safety, internal security, and fire protection is not grounds for denial or restriction of entry to any part of the facility or site, but merely describes the commission's duty to observe appropriate rules and regulations during an inspection.
5. The discharger is subject to administrative, civil, and criminal penalties, as applicable, under TWC Chapter 7 for violations including but not limited to the following:
   (a) negligently or knowingly violating the federal CWA §§301, 302, 306, 307, 308, 318, or 405, or any condition or limitation implementing any sections in a permit issued under CWA §402, or any requirement imposed in a pretreatment program approved under CWA §§402(a)(3) or 402(b)(8);
   (b) knowingly making any false statement, representation, or certification in any record or other document submitted or required to be maintained under a permit, including monitoring reports or reports of compliance or noncompliance; and
   (c) knowingly violating §303 of the federal CWA, and placing another person in imminent danger of death or serious bodily injury.
6. All reports and other information requested by the executive director must be signed by the person and in the manner required by 30 TAC §305.128 (relating to Signatories to Reports).
7. Authorization under this general permit does not convey property or water rights of any sort and does not grant any exclusive privilege.
8. The permittee shall take all reasonable steps to minimize or prevent any discharge in violation of this permit that has a reasonable likelihood of adversely affecting human health or the environment.
9. The permittee shall at all times properly operate and maintain all facilities and systems of treatment and control (and related appurtenances) which are installed or used by the permittee to achieve compliance with the conditions of this permit. Proper operation and maintenance also includes adequate laboratory controls and appropriate quality assurance procedures. This provision requires the operation of back-up or auxiliary facilities or similar systems which are installed by a permittee only when the operation is necessary to achieve compliance with the conditions of the permit.
10. The permittee shall comply with the reporting requirements in 40 CFR §122.41(l), as applicable.

Part VIII. Fees

1. A fee of must be submitted along with the NOI:
   (a) $325 if submitting a paper NOI, or
   (b) $225 if submitting an NOI electronically.

2. Fees are due upon submission of the NOI. An NOI will not be declared administratively complete unless the associated fee has been paid in full.
3. No separate annual fees will be assessed for this general permit. The Water Quality Annual Fee has been incorporated into the NOI fees as described above.

Appendix A: Automatic Authorization

Periods of Low Erosion Potential by County – Eligible Date Ranges

Andrews: Nov. 15 - Apr. 30

Archer: Dec. 15 - Feb. 14

Armstrong: Nov. 15 - Apr. 30

Bailey: Nov. 1 - Apr. 30, or Nov. 15 - May 14

Baylor: Dec. 15 - Feb. 14

Borden: Nov. 15 - Apr. 30

Brewster: Nov. 15 - Apr. 30

Briscoe: Nov. 15 - Apr. 30

Brown: Dec. 15 - Feb. 14

Callahan: Dec. 15 - Feb. 14

Carson: Nov. 15 - Apr. 30

Castro: Nov. 15 - Apr. 30

Childress: Dec. 15 - Feb. 14

Cochran: Nov. 1 - Apr. 30, or Nov. 15 - May 14

Coke: Dec. 15 - Feb. 14

Coleman: Dec. 15 - Feb. 14

Collingsworth: Jan. 1 - Mar. 30, or Dec. 1 - Feb. 28

Concho: Dec. 15 - Feb. 14

Cottle: Dec. 15 - Feb. 14

Crane: Nov. 15 - Apr. 30

Crockett: Nov. 15 - Jan. 14, or Feb. 1 - Mar. 30

Crosby: Nov. 15 - Apr. 30

Culberson: Nov. 1 - May 14

Dallam: Nov. 1 - Apr. 14, or Nov. 15 - Apr. 30

Dawson: Nov. 15 - Apr. 30

Deaf Smith: Nov. 15 - Apr. 30

Dickens: Nov. 15 - Jan. 14, or Feb. 1 - Mar. 30

Dimmit: Dec. 15 - Feb. 14

Donley: Jan. 1 - Mar. 30, or Dec. 1 - Feb. 28

Eastland: Dec. 15 - Feb. 14

Ector: Nov. 15 - Apr. 30

Edwards: Dec. 15 - Feb. 14

El Paso: Jan. 1 - Jul. 14, or May 15 - Jul. 31, or Jun. 1 - Aug. 14, or Jun. 15 - Sept. 14, or Jul. 1 - Oct. 14, or Jul. 15 - Oct. 31, or Aug. 1 - Apr. 30, or Aug. 15 - May 14, or Sept. 1 - May 30, or Oct. 1 - Jun. 14, or Nov. 1 - Jun. 30, or Nov. 15 - Jul. 14

Fisher: Dec. 15 - Feb. 14

Floyd: Nov. 15 - Apr. 30

Foard: Dec. 15 - Feb. 14

Gaines: Nov. 15 - Apr. 30

Garza: Nov. 15 - Apr. 30

Glasscock: Nov. 15 - Apr. 30

Hale: Nov. 15 - Apr. 30

Hall: Feb. 1 - Mar. 30

Hansford: Nov. 15 - Apr. 30

Hardeman: Dec. 15 - Feb. 14

Hartley: Nov. 15 - Apr. 30

Haskell: Dec. 15 - Feb. 14

Hockley: Nov. 1 - Apr. 14, or Nov. 15 - Apr. 30

Howard: Nov. 15 - Apr. 30

Hudspeth: Nov. 1 - May 14

Hutchinson: Nov. 15 - Apr. 30

Irion: Dec. 15 - Feb. 14

Jeff Davis: Nov. 1 - Apr. 30 or Nov. 15 - May 14

Jones: Dec. 15 - Feb. 14

Kent: Nov. 15 - Jan. 14 or Feb. 1 - Mar. 30

Kerr: Dec. 15 - Feb. 14

Kimble: Dec. 15 - Feb. 14

King: Dec. 15 - Feb. 14

Kinney: Dec. 15 - Feb. 14

Knox: Dec. 15 - Feb. 14

Lamb: Nov. 1 - Apr. 14, or Nov. 15 - Apr. 30

Loving: Nov. 1 - Apr. 30, or Nov. 15 - May 14

Lubbock: Nov. 15 - Apr. 30

Lynn: Nov. 15 - Apr. 30

Martin: Nov. 15 - Apr. 30

Mason: Dec. 15 - Feb. 14

Maverick: Dec. 15 - Feb. 14

McCulloch: Dec. 15 - Feb. 14

Menard: Dec. 15 - Feb. 14

Midland: Nov. 15 - Apr. 30

Mitchell: Nov. 15 - Apr. 30

Moore: Nov. 15 - Apr. 30

Motley: Nov. 15 - Jan. 14, or Feb. 1 - Mar. 30

Nolan: Dec. 15 - Feb. 14

Oldham: Nov. 15 - Apr. 30

Parmer: Nov. 1 - Apr. 14, or Nov. 15 - Apr. 30

Pecos: Nov. 15 - Apr. 30

Potter: Nov. 15 - Apr. 30

Presidio: Nov. 1 - Apr. 30, or Nov. 15 - May 14

Randall: Nov. 15 - Apr. 30

Reagan: Nov. 15 - Apr. 30

Real: Dec. 15 - Feb. 14

Reeves: Nov. 1 - Apr. 30, or Nov. 15 - May 14

Runnels: Dec. 15 - Feb. 14

Schleicher: Dec. 15 - Feb. 14

Scurry: Nov. 15 - Apr. 30

Shackelford: Dec. 15 - Feb. 14

Sherman: Nov. 15 - Apr. 30

Stephens: Dec. 15 - Feb. 14

Sterling: Nov. 15 - Apr. 30

Stonewall: Dec. 15 - Feb. 14

Sutton: Dec. 15 - Feb. 14

Swisher: Nov. 15 - Apr. 30

Taylor: Dec. 15 - Feb. 14

Terrell: Nov. 15 - Apr. 30

Terry: Nov. 15 - Apr. 30

Throckmorton: Dec. 15 - Feb. 14

Tom Green: Dec. 15 - Feb. 14

Upton: Nov. 15 - Apr. 30

Uvalde: Dec. 15 - Feb. 14

Val Verde: Nov. 15 - Jan. 14, or Feb. 1 - Mar. 30

Ward: Nov. 1 - Apr. 14, or Nov. 15 - Apr. 30

Wichita: Dec. 15 - Feb. 14

Wilbarger: Dec. 15 - Feb. 14

Winkler: Nov. 1 - Apr. 30, or Nov. 15 - May 14

Yoakum: Nov. 1 - Apr. 30, or Nov. 15 - May 14

Young: Dec. 15 - Feb. 14

Wheeler: Jan. 1 - Mar. 30, or Dec. 1 - Feb. 28

Zavala: Dec. 15 - Feb. 14

Appendix B: Erosivity Index (EI) Zones in Texas

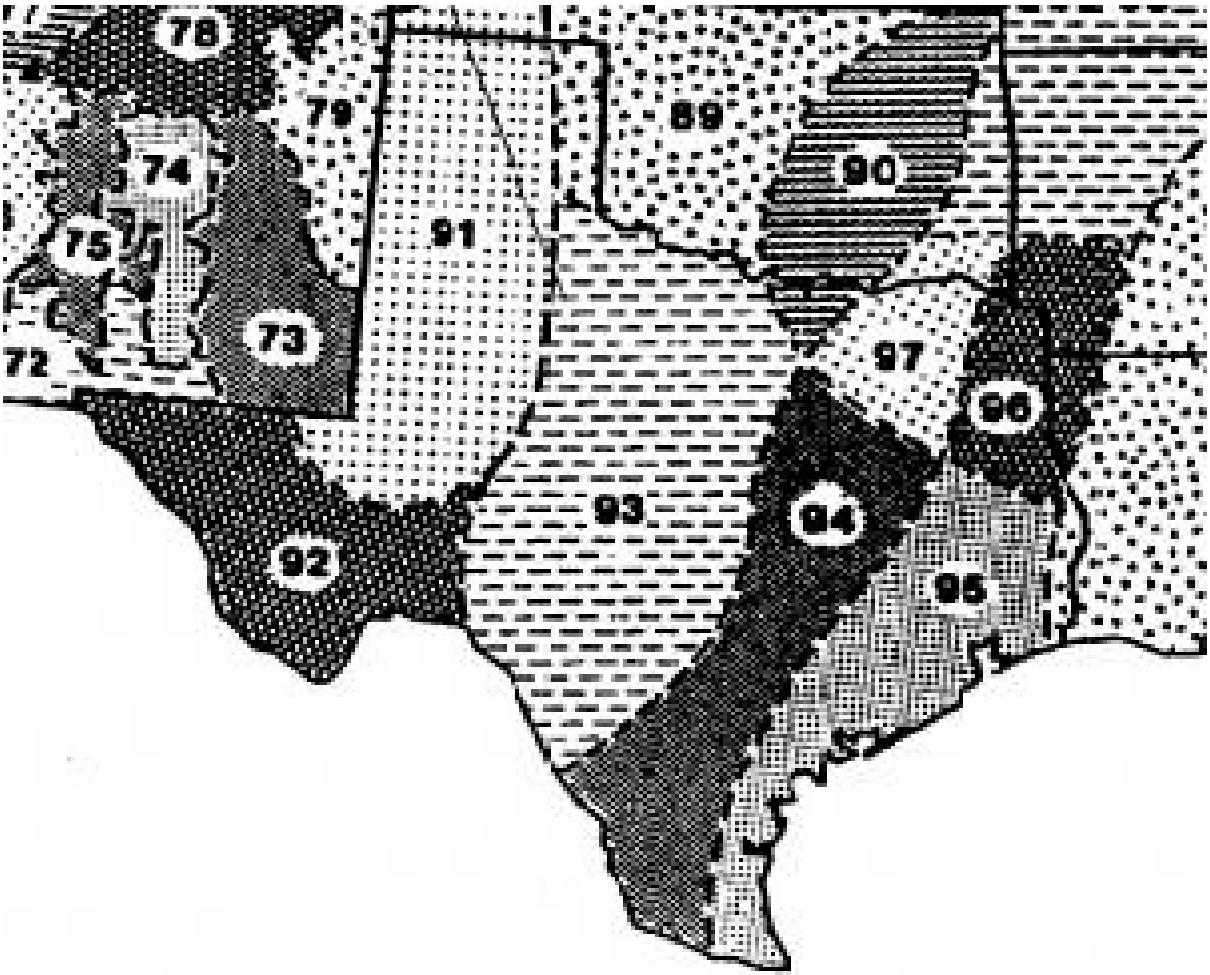

Adapted from Chapter 2 of USDA Agriculture Handbook 703: "Predicting Soil Erosion by Water: A Guide to Conservation Planning With the Revised Universal Soil Loss Equation (RUSLE)," U.S. Department of Agriculture, Agricultural Research Service

Appendix C: Isoerodent Map

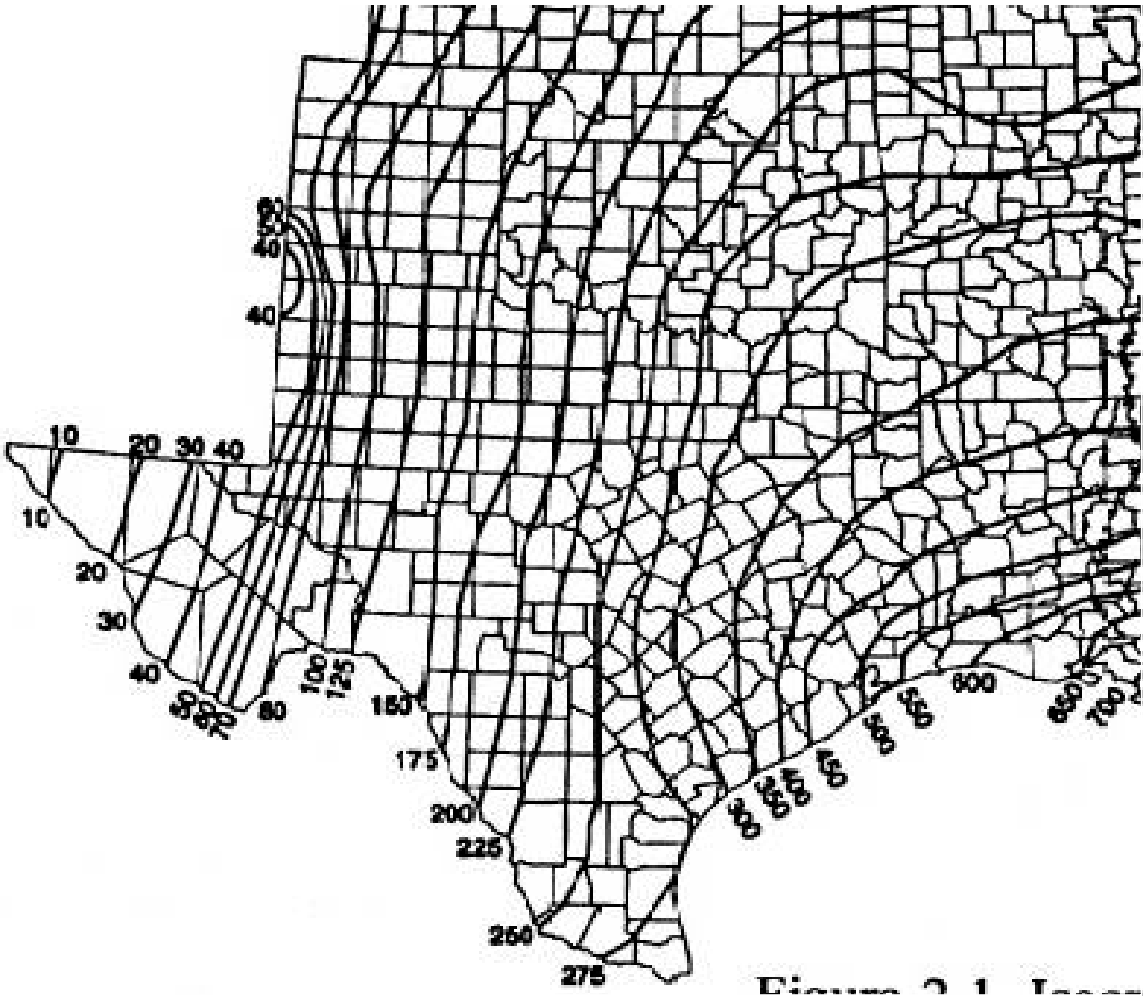

Adapted from Chapter 2 of USDA Agriculture Handbook 703: "Predicting Soil Erosion by Water: A Guide to Conservation Planning With the Revised Universal Soil Loss Equation (RUSLE)," U.S. Department of Agriculture, Agricultural Research Service

Appendix D: Erosivity Indices for EI Zones in Texas

Periods:

EI #	1/1	1/16	1/31	2/15	3/1	3/16	3/31	4/15	4/30	5/15	5/30	6/14	6/29	7/14	7/29	8/13	8/28	9/12	9/27	10/12	10/27	11/11	11/26	12/11	12/31
89	0	1	1	2	3	4	7	2	8	27	38	48	55	62	69	76	83	90	94	97	98	99	100	100	100
90	0	1	2	3	4	6	8	13	21	29	37	46	54	60	65	69	74	81	87	92	95	97	98	99	100
91	0	0	0	0	1	1	1	2	6	16	29	39	46	53	60	67	74	81	88	95	99	99	100	100	100
92	0	0	0	0	1	1	1	2	6	16	29	39	46	53	60	67	74	81	88	95	99	99	100	100	100
93	0	1	1	2	3	4	6	8	13	25	40	49	56	62	67	72	76	80	85	91	97	98	99	99	100
94	0	1	2	4	6	8	10	15	21	29	38	47	53	57	61	65	70	76	83	88	91	94	96	98	100
95	0	1	3	5	7	9	11	14	18	27	35	41	46	51	57	62	68	73	79	84	89	93	96	98	100
96	0	2	4	6	9	12	17	23	30	37	43	49	54	58	62	66	70	74	78	82	86	90	94	97	100
97	0	1	3	5	7	10	14	20	28	37	48	56	61	64	68	72	77	81	86	89	92	95	98	99	100
106	0	3	6	9	13	17	21	27	33	38	44	49	55	61	67	71	75	78	81	84	86	90	94	97	100

* Each period begins on the date listed in the table above and lasts until the day before the following period. The final period begins on December 11 and ends on December 31.

Table adapted from Chapter 2 of USDA Agriculture Handbook 703: "Predicting Soil Erosion by Water: A Guide to Conservation Planning With the Revised Universal Soil Loss Equation (RUSLE)," U.S. Department of Agriculture, Agricultural Research Service