GEOTEST ENGINEERING, INC.

Geotechnical Engineers & Materials Testing

5600 Bintliff Drive Houston, Texas 77036 Telephone: (713) 266-0588
Fax: (713) 266-2977

Job No. 1140187001
Trench Safety Report
January 4, 2013

Mr. Bill M. Gunkle, P.E.
Transystems
3200 Southwest Freeway, Suite 1350
Houston, Texas 77027

Reference: Trench Safety Design Considerations
Clinton Drive Reconstruction Project – Segment 1
WBS No. N-000801-0001-3
Houston, Texas

Dear Mr. Gunkle:

We are pleased to present our geotechnical information for trench safety for the referenced project.

For trench excavation, it is essential to maintain the stability of the sides and base and not to disturb the soil below the excavation grade. This is necessary to prevent any damage to adjacent facilities as a result of either vertical or lateral movements of the soil. In addition, a satisfactory excavation procedure must include an adequate construction dewatering system to lower and maintain the water level at least 3 feet below the lowest excavation grade or a minimum of 5 feet below prevailing level of backfill during backfilling. This will minimize the potential for softening or "boiling" of the base support soil.

Trench Excavation

Based on the information provided by Transystems, it is understood that the storm sewer and water line will be by installed by open cut method of construction except on Hirsch Street at existing UPRR track crossing where it will be trenchless (bore and jack) method of construction.

The following subsections provide information for the design and construction of the utilities by open cut method of excavations including open excavation for access shafts.

Geotechnical Parameters. Based on the soil conditions revealed by the borings GB-1 through GB-10, geotechnical parameters were developed for the design of open cut construction for utilities installation. The design parameters are provided in Table 1. For design, the groundwater level should be assumed to exist at the ground surface.

Excavation Stability. The open excavation may be shored or laid back to a stable slope or supported by some other equivalent means used to provide safety for workers and adjacent structures, if any. The excavating operations should be in accordance with OSHA Standards, OSHA 2207, Subpart P, latest revision and the City of Houston Standard Specification.

- Excavation Shallower Than 5 Feet - Excavations that are less than 5 feet deep **(critical height)** should be effectively protected when an indication of dangerous ground movement is anticipated.

- Excavations Deeper Than 5 Feet - Excavations that are deeper than 5 feet should be sloped, shored, sheeted, braced or laid back to a stable slope or supported by some other equivalent means or protection such that workers are not exposed to moving ground or cave-ins. The slopes and shoring should be in accordance with the trench safety requirements as per OSHA Standards. The following items provide design criteria for excavation stability.

  (i) OSHA Soil Type. Based on the soil conditions revealed by borings drilled for this study and assumed groundwater level at surface, OSHA soil type "C" should be used for determination of allowable maximum slope and/or the design of shoring along the alignment for full proposed depth of open excavation. For shoring deeper than 20 feet (if needed), an engineering evaluation is required and deeper soil borings will be needed.

(ii) Excavation Support Earth Pressure. Based on the subsurface conditions indicated by our field investigation and laboratory testing results, excavation support earth pressure diagrams were developed and are presented on Figures 1.1 through 1.3. These pressure diagrams can be used for the design of temporary trench bracing. For a trench box, a lateral earth pressure resulting from an equivalent fluid with a unit weight of 91 pcf can be used. The effects of any surcharge loads at the ground surface should be added to the computed lateral earth pressures. A surcharge load, q, will typically result in a lateral load equal to 0.5 q. The above value of equivalent fluid pressure is based on assumption that the groundwater level is near the ground surface, since these conditions may exist after a heavy rain or flooding.

(iii) Bottom Stability. In braced cuts, if tight sheeting is terminated at the base of the cut, the bottom of the excavation can become unstable. The parameters that govern the stability of the excavation base are the soil shear strength and the differential hydrostatic head between the groundwater level within the retained soils and the groundwater level at the interior of the trench excavation. For cut in cohesive soils as predominantly encountered for the proposed excavation depths in most of the borings, the bottom stability can be evaluated as outlined on Figure 2. However, at locations near boring GB-3A, GB-4B and GB-5 where cohesionless soils (such as fine sand w/silt and silty sand) were encountered at the invert or within 3 feet of bottom of excavation, dewatering will be necessary to avoid bottom stability problems.

Groundwater Control. Excavations for the utilities may encounter groundwater seepage to varying degrees depending upon the groundwater conditions at the time of construction and the location and depth of the trench. Based on the soil conditions identified in the borings for the proposed water line and storm sewer installation, all the excavations will be in cohesive soils except at borings GB-3A, GB-4B and GB-5 where water line and storm sewer will be in cohesionless soils.

In general for cohesive soils as predominantly encountered for most of the borings for the excavation depths, the groundwater if encountered may be managed by collection in excavation bottom sumps for pumped disposal. However, in borings GB-3A, GB-4B and GB-5 where cohesionless soils were encountered at the invert or within 3 feet of bottom of the excavation; dewatering will be required. Dewatering such as vacuum well points up to 15 feet or deep wells with submersible pumps for excavation greater than 15 feet may be required to lower the groundwater level to at least 5 feet below the bottom of the excavation. It is recommended that the actual groundwater conditions should be verified by the contractor at the time of construction and that groundwater control should be performed in general accordance with the City of Houston Standard Specifications, Section 01578.

We appreciate this opportunity to be of service to you. If you have any questions regarding the report, or if we can be of further service to you, please call us.

Sincerely,
GEOTEST ENGINEERING, INC.
TBPE Registration No. F-410

Naresh Kolli, P.E.
Assistant Project Manager

STATE OF TEXAS
NARESH KOLLI
110928
LICENSED
PROFESSIONAL ENGINEER

NK\ego
Copies Submitted: (2)
Enclosures: Trench Support Earth Pressure – Figures 1.1 thru 1.3
Stability of Bottom for Braced Cut – Figure 2
Geotechnical Design Parameter Summary: Open-cut Excavation – Table 1
PC38\GEOTECHNICAL\40187001-TS.DOC

Job No. 1140187001

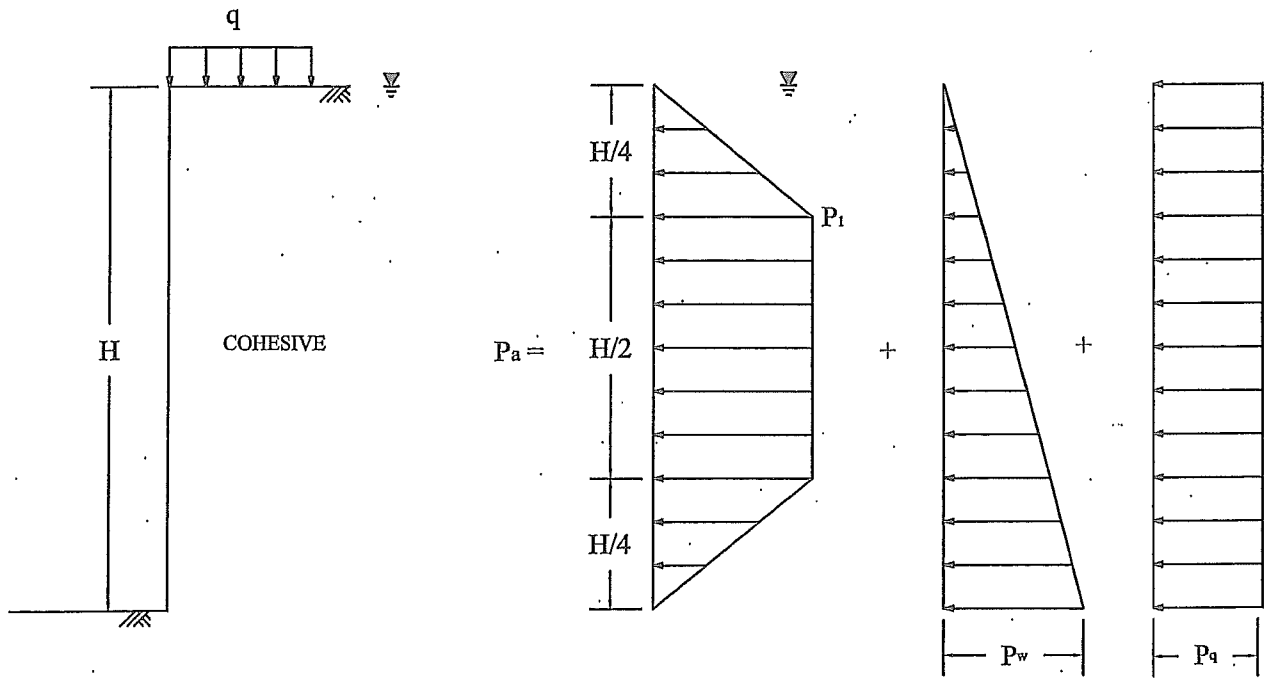

TYPICAL SOIL PARAMETERS

BRACED WALL

See Table 1 for typical values of soil parameters

For $\gamma H/c \leq 4$

$P_1 = 0.3\ \gamma_c' H$
$P_w = \gamma_w H = 62.4\ H$
$P_q = 0.5\ q$

Where:

γ_c' = Submerged unit weight of cohesive soil, pcf;
γ_w = Unit weight of water, pcf;
q = Surcharge load at surface, psf;
P_a = Lateral pressure, psf;
P_1 = Active earth pressure, psf;
P_q = Horizontal pressure due to surcharge, psf;
P_w = Hydrostatic pressure due to groundwater, psf;
H = Depth of braced excavation, feet
c = Shear strength of cohesion soil, psf;

TRENCH SUPPORT EARTH PRESSURE

SUBMERGED COHESIVE SOIL

Job No. 1140187001

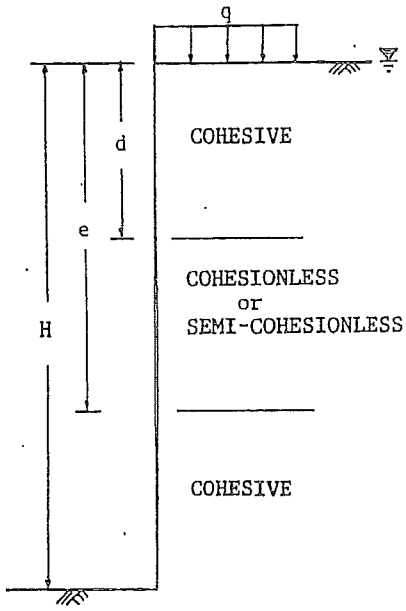

TYPICAL SOIL PARAMETERS

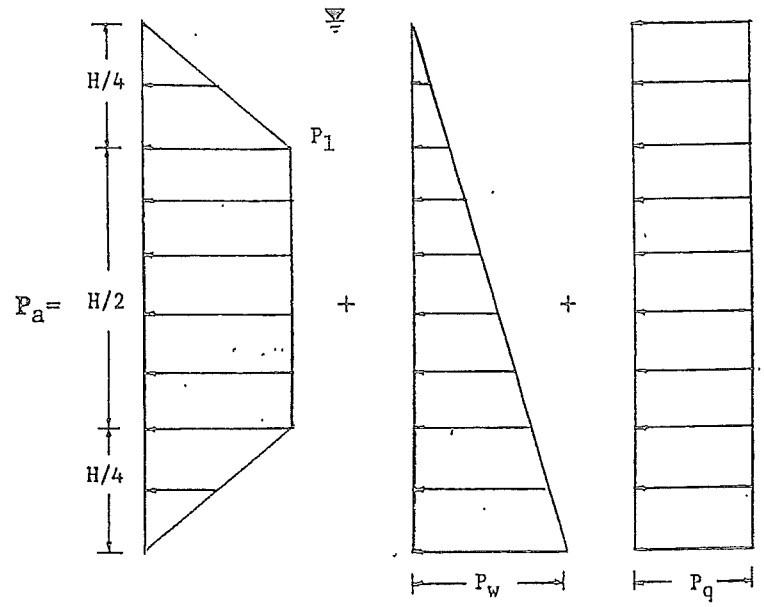

BRACED WALL

See Table 1 for typical values of soil parameters

$P_1 = 0.3\ \gamma'_{avg}\ H$

$P_w = \gamma_w\ H = 62.4\ H$

$P_q = 0.5q$

$$\gamma'_{avg} = \frac{\gamma_c'\ d + \gamma_s'\ (e-d) + \gamma_c'\ (H-e)}{H}$$

$\gamma_w = 62.4$ pcf

Where:

- γ_c' = Submerged unit weight of cohesive soil, pcf ;
- γ_s' = Submerged unit weight of cohesionless or semi-cohesionless soil, pcf ;
- γ_w = Unit weight of water, pcf;
- γ'_{avg} = Average submerged unit weight of soil, pcf ;
- q = Surcharge load at surface, psf;
- P_a = Lateral pressure, psf;
- P_1 = Active earth pressure, psf;
- P_q = Horizontal pressure due to surcharge, psf;
- P_w = Hydrostatic pressure due to groundwater, psf;
- H = Depth of braced excavation, feet

TRENCH SUPPORT EARTH PRESSURE

SUBMERGED COHESIVE SOIL INTERBEDDED WITH COHESIONLESS OR SEMI-COHESIONLESS SOIL

Job No. 1140187001

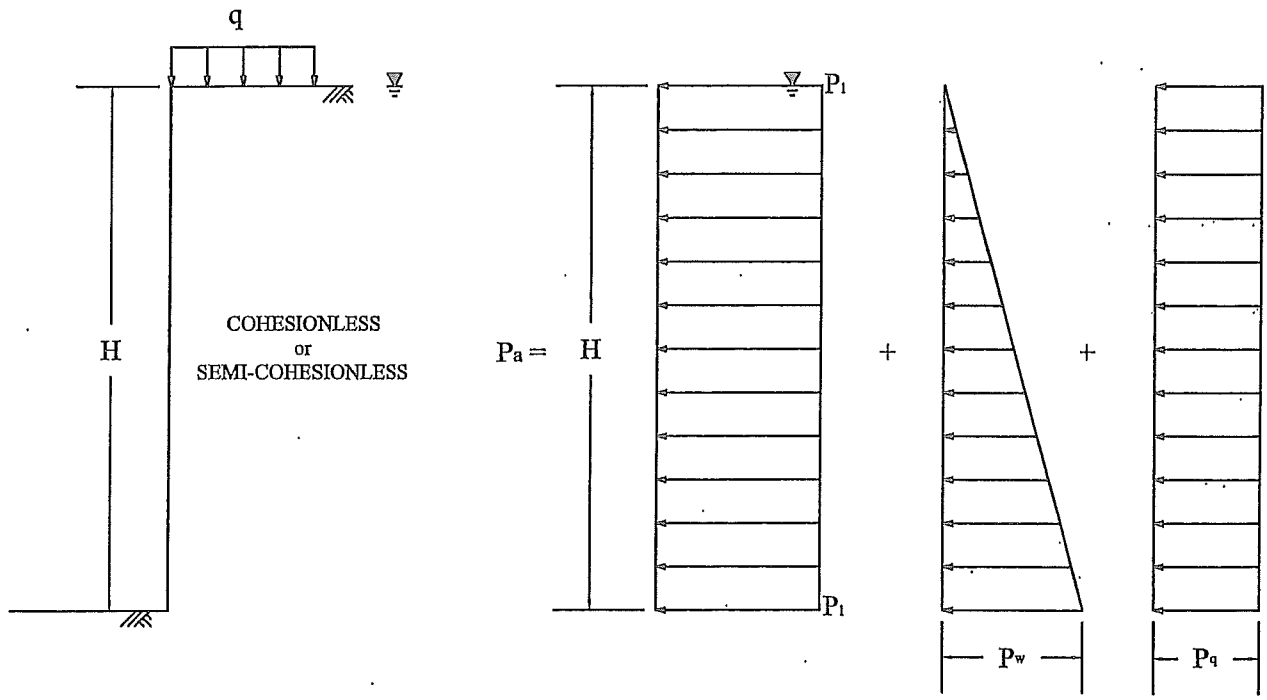

TYPICAL SOIL PARAMETERS

BRACED WALL

See Table 1 for typical values of soil parameters

$P_1 = 0.65\ K_a\ \gamma_s'\ H$
$P_w = 62.4\ H$
$P_q = 0.5\ q$

$K_a = \tan^2(45 - \phi/2)$

Where:

γ_s' = Submerged unit weight of cohesionless or semi-cohesionless soil, pcf;
q = Surcharge load at surface, psf;
P_a = Lateral pressure, psf;
P_1 = Active earth pressure, psf;
P_q = Horizontal pressure due to surcharge, psf;
P_w = Hydrostatic pressure due to groundwater, psf;
H = Depth of braced excavation, feet;
K_a = Coefficient of active earth pressure;
ϕ = Angle of internal friction

TRENCH SUPPORT EARTH PRESSURE

SUBMERGED COHESIONLESS OR SEMI-COHESIONLESS SOIL

Job No. 1140187001

CUT IN COHESIVE SOIL,
DEPTH OF COHESIVE SOIL UNLIMITED ($T > 0.7\ B_d$)
L = LENGTH OF CUT

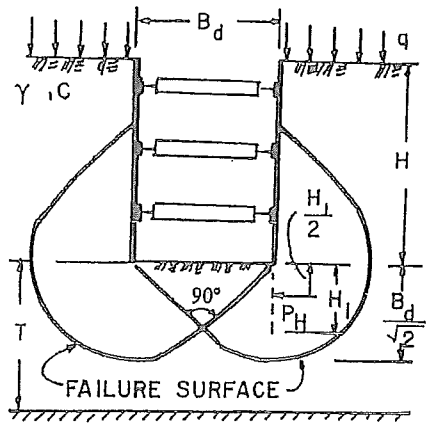

If sheeting terminates at base of cut:

$$\text{Safety factor, } F_S = \frac{N_C C}{\gamma H + q}$$

N_C = Bearing capacity factor, which depends on dimensions of the excavation : B_d, L and H (use N_C from graph below)

C = Undrained shear strength of clay in failure zone beneath and surrounding base of cut

γ = Wet unit weight of soil (see Table 1)

q = Surface surcharge (assume q = 500 psf)

If safety factor is less than 1.5, sheeting or soldier piles must be carried below the base of cut to insure stability - (see note)

$$H_1 = \text{Buried length} = \frac{B_d}{2} \geq 5 \text{ feet}$$

Note : If soldier piles are used, the center to center spacing should not exceed 3 times the width or diameter of soldier pile .

Force on buried length, P_H:

If $H_1 > \frac{2}{3}\frac{B_d}{\sqrt{2}}$, $P_H = 0.7\,(\gamma HB_d - 1.4CH - \pi CB_d)$ in lbs/ linear foot

If $H_1 < \frac{2}{3}\frac{B_d}{\sqrt{2}}$, $P_H = 1.5H_1\,(\gamma H - \frac{1.4CH}{B_d} - \pi C)$ in lbs/ linear foot

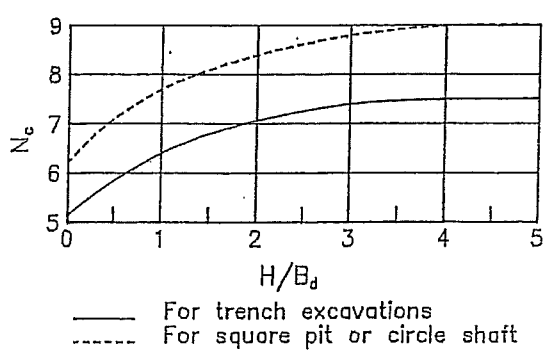

STABILITY OF BOTTOM
FOR
BRACED CUT

TABLE 1

GEOTECHNICAL DESIGN PARAMETER SUMMARY
OPEN-CUT EXCAVATION

Alignments	Boring Nos.	Stratigraphic Unit	Range of Depths, ft	Wet Unit Weight, γ, Pcf	Submerged Unit Weight, γ', pcf	Undrained Cohesion, psf	Internal Friction Angle, φ, degree
24" to 54" Storm Sewer and 12" Water Along Clinton Drive and Hirsch	GB-1 (GB-1P)	Cohesive	0-8	123	62	800	--
			8-15	130	65	1,000	--
			15-18	130	65	2,000	--
			18-23	130	65	800	--
		Cohesionless	23-25	110	55	--	30
		Cohesive	25-42	125	63	3,000	--
	GB-2	Cohesive	0-6	125	63	2,500	--
			6-13	125	63	1,600	--
			13-15	120	60	1,000	--
	GB-3A	Cohesionless	0-13	104	52	--	30
	GB-4B	Cohesive	0-8	125	63	1,000	--
		Cohesionless	8-22	110	55	--	30
		Cohesive	22-27	120	60	3,500	--
	GB-5	Cohesive	0-10	130	65	1,600	--
		Cohesionless	10-16	110	55	--	28
		Cohesive	16-23	130	65	800	--
			23-33	130	65	2,500	--
			33-39	120	60	1,200	--
	GB-6 (GB-6P)	Cohesive	0-6	125	63	1,500	--
			6-14	130	65	3,000	--
			14-22	130	65	1,500	--
			22-26	120	60	3,500	--
	GB-7	Cohesive	0-10	125	63	1,400	--
			10-16	120	60	3,000	--
			16-23	130	65	1,500	--
		Cohesionless	23-30	114	57	--	30
	GB-8 and GB-9	Cohesive	0-6	115	58	1,000	--
			6-10	125	63	2,000	--
			10-17	125	63	500	--
			17-23	125	63	1,800	--
24" Storm Sewer and 8" Water Along Hirsch	GB-10	Cohesive	0-6	115	58	1,000	--
			6-10	125	63	2,000	--
			10-17	125	63	1,000	--
							--

Note: 1) Cohesive soils include Fat Clay, Fat Clay w/sand, Lean Clay, Lean Clay with sand and Sandy Lean Clay.
2) Cohesionless soils include Silty Sand, Fine Sand w/silt and Sandy Silt.