GEOTEST ENGINEERING, INC.

Geotechnical Engineers & Materials Testing

5600 Bintliff Drive Houston, Texas 77036 Telephone: (713) 266-0588
Fax: (713) 266-2977

Job No. 1140211601
Trench Safety Report
October 28, 2015

Ms. Meleida Sierra, P.E.
Sr. Project Engineer
LJA Engineering, Inc.
2929 Briarpark Drive
Houston, Texas 77027

Reference: Trench Safety Design Considerations
Westway Wastewater Treatment Plant Improvements
WBS No. R-000265-0132-3
Houston, Texas

Dear Ms. Sierra:

We are pleased to present our geotechnical information for trench safety for the referenced project.

For trench excavation, it is essential to maintain the stability of the sides and base and not to disturb the soil below the excavation grade. This is necessary to prevent any damage to adjacent facilities as a result of either vertical or lateral movements of the soil. In addition, a satisfactory excavation procedure must include an adequate construction dewatering system to lower and maintain the water level at least 3 feet below the lowest excavation grade or a minimum of 5 feet below prevailing level of backfill during backfilling. This will minimize the potential for softening or "boiling" of the base support soil.

Trench Excavation

The following subsections provide information for the design and construction of the proposed 30- inch sanitary sewer line that will be by installed by open cut method of construction.

Geotechnical Parameters. Based on the soil conditions revealed by the borings GB-3 and GB-4, geotechnical parameters were developed for the design of open cut construction for proposed 30-inch sanitary sewer line. The design parameters are provided in Table 1. For design, the groundwater level should be assumed to exist at the ground surface.

Excavation Stability. The open excavation may be shored or laid back to a stable slope or supported by some other equivalent means used to provide safety for workers and adjacent structures, if any. The excavating operations should be in accordance with OSHA Standards, OSHA 2207, Subpart P, latest revision and the City of Houston Standard Specification.

- Excavation Shallower Than 5 Feet - Excavations that are less than 5 feet deep **(critical height)** should be effectively protected when an indication of dangerous ground movement is anticipated.

- Excavations Deeper Than 5 Feet - Excavations that are deeper than 5 feet (if any) should be sloped, shored, sheeted, braced or laid back to a stable slope or supported by some other equivalent means or protection such that workers are not exposed to moving ground or cave-ins. The slopes and shoring should be in accordance with the trench safety requirements as per OSHA Standards. The following items provide design criteria for excavation stability.

  (i) OSHA Soil Type. Based on the soil conditions revealed by borings drilled for this study and assumed groundwater level at surface, OSHA soil type "C" should be used for determination of allowable maximum slope and/or the design of shoring along the alignment for full proposed depth of open excavation. For shoring deeper than 20 feet (if needed), an engineering evaluation is required and deeper soil borings will be needed.

  (ii) Excavation Support Earth Pressure. Based on the subsurface conditions indicated by our field investigation and laboratory testing results, excavation support earth pressure diagrams were developed and are presented on Figures 1.1 and 1.2. This pressure diagram can be used for the design of temporary trench bracing. For a trench box, a lateral earth pressure resulting from an equivalent fluid with a unit weight of 96 pcf can be used. The effects of any surcharge loads at the ground surface should be added to the computed lateral earth pressures. A surcharge load,

q, will typically result in a lateral load equal to 0.5 q. The above value of equivalent fluid pressure is based on assumption that the groundwater level is near the ground surface, since these conditions may exist after a heavy rain or flooding.

(iii) Bottom Stability. In braced cuts, if tight sheeting is terminated at the base of the cut, the bottom of the excavation can become unstable. The parameters that govern the stability of the excavation base are the soil shear strength and the differential hydrostatic head between the groundwater level within the retained soils and the groundwater level at the interior of the trench excavation. For cut in cohesive soils as predominantly encountered for the proposed excavation depths, the bottom stability can be evaluated as outlined on Figure 2. However, due to presence of silty sand at depths 12 feet to 17 feet in borings GB-3 and GB-4, the excavation should be performed after dewatering to avoid bottom stability problems.

Groundwater Control

Excavations for the clarifier and sanitary sewer line will encounter groundwater seepage to varying degrees depending upon the groundwater conditions at the time of construction and the location and depth of the trench. Based on the soil conditions identified in the borings, all the excavations will be in cohesive soils with interbedded cohesionless soils. In general for cohesive soils the groundwater if encountered may be managed by collection in excavation bottom sumps for pumped disposal. In cohesionless soils such as silty sand encountered between the depths of 11 to 17 feet in all the borings dewatering such as vacuum well points may be required to lower the ground water level at least 5 feet below the bottom of excavation.

It is recommended that the actual groundwater conditions should be verified by the contractor at the time of construction and that groundwater control should be performed in general accordance with the City of Houston Standard Specifications, Section 01578.

Range of cohesionless soils encountered within/or near the invert depth.

Boring No.	**Range of Weak Soils Encountered, ft**		**Soil Type**
	From	**To**	
GB-1	12	18.5	Silty Sand
GB-3	12	18	Silty Sand
GB-4	12	18.5	Silty Sand

We appreciate this opportunity to be of service to you. If you have any questions regarding the report, or if we can be of further service to you, please call us.

Sincerely,
GEOTEST ENGINEERING, INC.
TBPE Registration No. F-410

N. Naresh

Naresh Kolli, P.E.
Assistant Project Manager

STATE OF TEXAS
10/28/15
NARESH KOLLI
110928
LICENSED
PROFESSIONAL ENGINEER

NK\ego
Copies Submitted: (2)
Enclosures: Trench Support Earth Pressure – Figures 1.1 and 1.2
Stability of Bottom for Braced Cut – Figure 2
Geotechnical Design Parameter Summary: Open-cut Excavation – Table 1
PC38\GEOTECHNICAL\40211601-TS.DOC

Job No. 1140211601

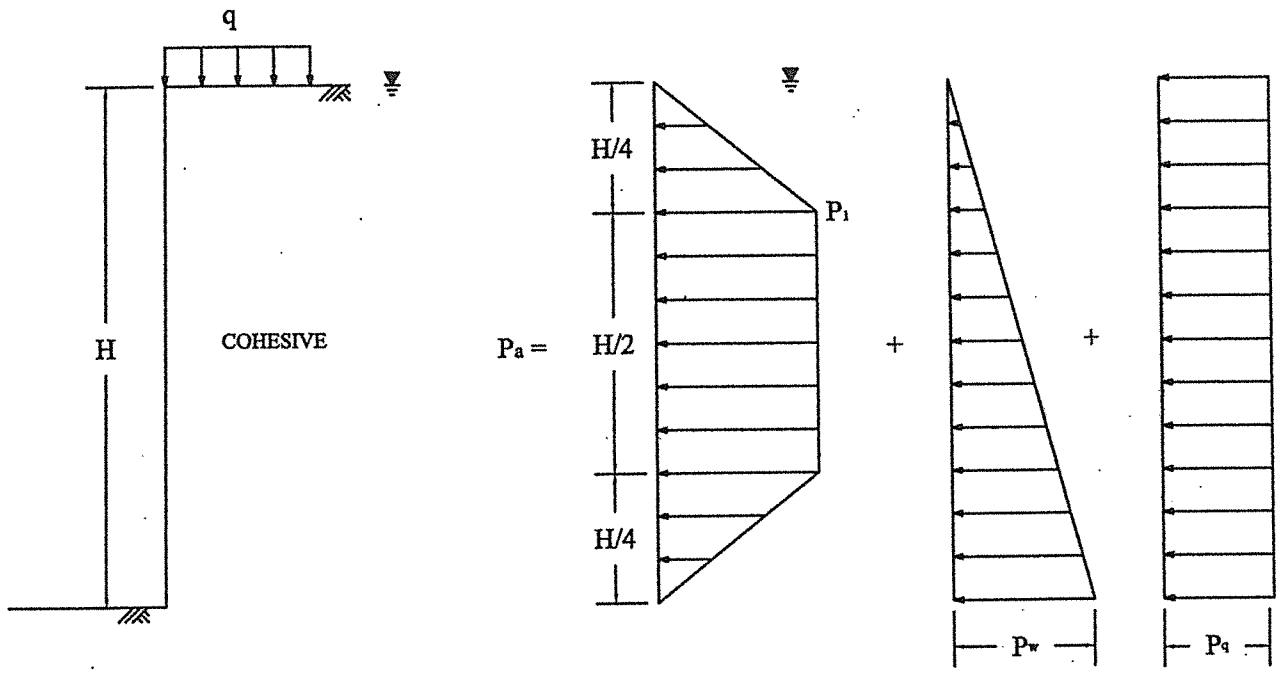

TYPICAL SOIL PARAMETERS

See Table 1 for typical values of soil parameters

BRACED WALL

For $\gamma H/c \leq 4$

$P_1 = 0.3\ \gamma_c'\ H$
$P_w = \gamma_w\ H = 62.4\ H$
$P_q = 0.5\ q$

Where:

γ_c' = Submerged unit weight of cohesive soil, pcf;
γ_w = Unit weight of water, pcf;
q = Surcharge load at surface, psf;
P_a = Lateral pressure, psf;
P_1 = Active earth pressure, psf;
P_q = Horizontal pressure due to surcharge, psf;
P_w = Hydrostatic pressure due to groundwater, psf;
H = Depth of braced excavation, feet
c = Shear strength of cohesion soil, psf;

TRENCH SUPPORT EARTH PRESSURE

SUBMERGED COHESIVE SOIL

Job No. 1140211601

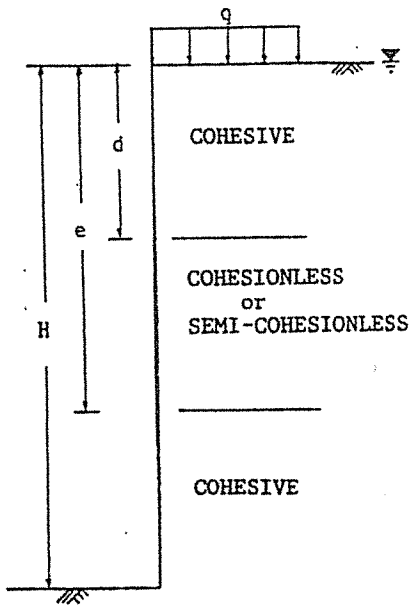

TYPICAL SOIL PARAMETERS

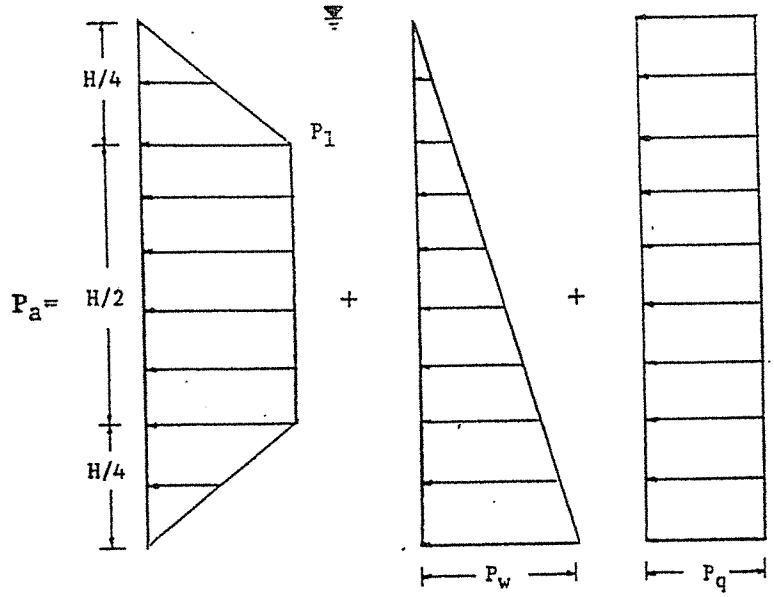

BRACED WALL

See Table 1 for typical values of soil parameters

$P_1 = 0.3\ \gamma'_{avg}\ H$

$P_w = \gamma_w\ H = 62.4\ H$

$P_q = 0.5q$

$$\gamma'_{avg} = \frac{\gamma_c'\ d + \gamma_s'\ (e-d) + \gamma_c'\ (H-e)}{H}$$

$\gamma_w = 62.4$ pcf

Where:

- γ_c' = Submerged unit weight of cohesive soil, pcf ;
- γ_s' = Submerged unit weight of cohesionless or semi-cohesionless soil, pcf ;
- γ_w = Unit weight of water, pcf;
- γ'_{avg} = Average submerged unit weight of soil, pcf ;
- q = Surcharge load at surface, psf;
- P_a = Lateral pressure, psf;
- P_1 = Active earth pressure, psf;
- P_q = Horizontal pressure due to surcharge, psf;
- P_w = Hydrostatic pressure due to groundwater, psf;
- H = Depth of braced excavation, feet

TRENCH SUPPORT EARTH PRESSURE

SUBMERGED COHESIVE SOIL INTERBEDDED WITH COHESIONLESS OR SEMI-COHESIONLESS SOIL

Job No. 1140211601

CUT IN COHESIVE SOIL,
DEPTH OF COHESIVE SOIL UNLIMITED ($T > 0.7\ B_d$)
L = LENGTH OF CUT

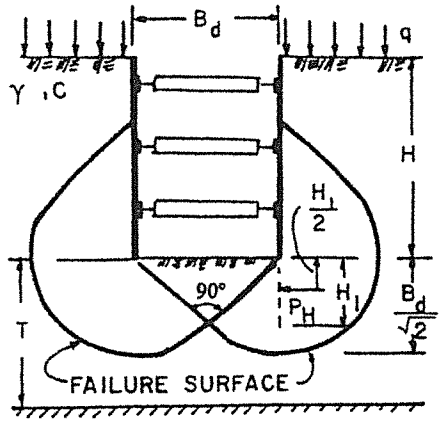

If sheeting terminates at base of cut:

$$\text{Safety factor, } F_S = \frac{N_C C}{\gamma H + q}$$

N_C = Bearing capacity factor, which depends on dimensions of the excavation : B_d, L and H (use N_C from graph below)

C = Undrained shear strength of clay in failure zone beneath and surrounding base of cut

γ = Wet unit weight of soil (see Table 1)

q = Surface surcharge (assumed q = 500 psf)

If safety factor is less than 1.5, sheeting or soldier piles must be carried below the base of cut to insure stability - (see note)

$$H_1 = \text{Buried length} = \frac{B_d}{2} \geq 5 \text{ feet}$$

Note : If soldier piles are used, the center to center spacing should not exceed 3 times the width or diameter of soldier pile .

Force on buried length, P_H:

$$\text{If } H_1 > \frac{2}{3}\frac{B_d}{\sqrt{2}}, \quad P_H = 0.7\,(\gamma H B_d - 1.4CH - \pi C B_d) \text{ in lbs/ linear foot}$$

$$\text{If } H_1 < \frac{2}{3}\frac{B_d}{\sqrt{2}}, \quad P_H = 1.5H_1\left(\gamma H - \frac{1.4CH}{B_d} - \pi C\right) \text{ in lbs/ linear foot}$$

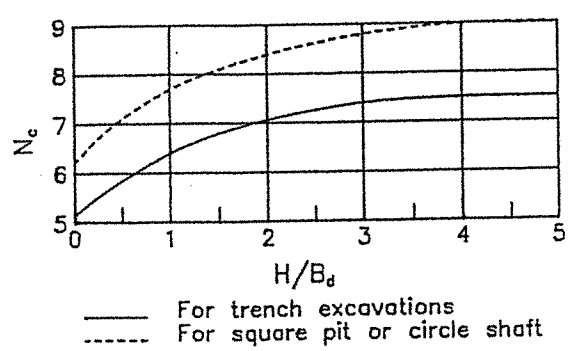

STABILITY OF BOTTOM
FOR
BRACED CUT

TABLE 1

GEOTECHNICAL DESIGN PARAMETER SUMMARY
OPEN-CUT EXCAVATION

Boring Nos.	**Stratigraphic Unit**	**Range of Depths, ft**	**Wet Unit Weight, γ, pcf**	**Submerged Unit Weight, γ', pcf**	**Undrained Cohesion, psf**	**Internal Friction Angle, φ, degree**
GB-1	Cohesive	0-4	130	65	800	--
through		4-10	132	66	1,000	--
GB-4		10-12	132	66	500	--
	Cohesionless	12-18	110	55	--	30
	Cohesive	18-25	120	60	1,000	--

Note: 1) Cohesive soils include sandy lean clay.
2) Cohesionless soils include silty sand.