CITY OF HOUSTON
DEPARTMENT OF PUBLIC WORKS
1973

ALMEDA-SIMS SLUDGE DISPOSAL PLANT

CONTRACT NO. C-1
JOB NO. 3304-DS
W.P.C.-TEX-1074

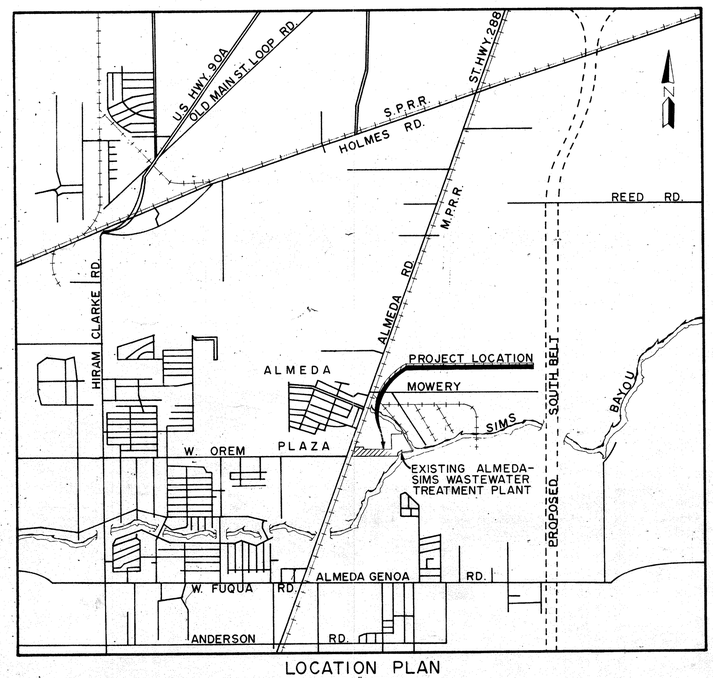

LOCATION PLAN
SCALE: 1" = 3000

E. B. CAPE
DIRECTOR DEPARTMENT OF PUBLIC WORKS

BINKLEY AND HOLMES, INC.
CONSULTING ENGINEERS
HOUSTON, TEXAS

INDEX TO SHEETS

TITLE	SHEET NO.
EXISTING TOPOGRAPHY *(Deleted Sheet 1 From This Contract)*	1 & 2
DEMOLITION PLAN *(Deleted From This Contract)*	3 & 4
SITE PLAN	5 & 6
GRADING & DRAINAGE	7 & 8
PROPOSED PAVING *(Deleted Sheet 9 From This Contract)*	9 & 10
YARD PIPING PLAN	11 & 12
RAILROAD SPUR TRACK - PLAN & PROFILE *(Deleted From This Contra*	13 & 14
STORM SEWER - PLAN & PROFILE *(Deleted Sheet 17 & 18 From This Contract)*	15 - 19
SANITARY SEWER - PLAN & PROFILE	20 & 21
PAVING DETAILS	22
RETAINING WALL	23
FENCE PLAN	24 & 25
LANDSCAPING PLAN *(Deleted Sheet 26 From This Contract)*	26 & 27
CROSS SECTIONS	28 - 30
FILTER ROOM	
SOUTH ELEVATION	31
EQUIPMENT LAYOUT	32 & 33
ROOF LAYOUT & DETAILS	34
STRUCTURAL	35 - 44
GRATING & PIPE SLEEVE LAYOUT	45
GRATING, HANDRAIL & SPLASH GUARD DETAILS	46
STRUCTURAL FRAMING	47 - 51
STAIR DETAILS	52
ARCHITECTURAL SECTIONS & DETAILS	53
SEAL WATER RECIRCULATION PIT	54
CONSTANT HEAD TANK	
PLAN AT ELEV. 85.00	55
STRUCTURAL	56 - 65
PIPING	66 - 69
SUPERINTENDENTS OFFICE, LUNCH & REST ROOMS PLAN & DETAILS	70
(Deleted From This Contract)	71
PLUMBING PLANS	72 & 73
DRYER ROOM	
STRUCTURAL	74 - 93
STRUCTURAL FRAMING	94 - 99
ELEVATOR DETAILS	100 & 101
(Deleted From This Contract)	102 & 103
OPERATOR STATION	104 & 105
STAIRWAY DETAILS	106
PORTABLE BOOM AND MAST DETAILS	107 & 108
BELT CONVEYORS	109 - 114
SCREW CONVEYORS	115
(Deleted From This Contract	116 & 117
LOADING & STORAGE BUILDING *(Deleted From This Contract)*	
CHEMICAL ROOM	118 - 125
MISCELLANEOUS REINFORCED CONCRETE DETAILS	126
SCREENING FACILITY	127 - 130
(Deleted From This Contract)	131 - 142
FILTRATE SEAL PIT PLAN & DETAILS	143 - 146
FERRIC CHLORIDE STORAGE PLAN & DETAILS	147 - 152
SLUDGE PUMPING FACILITIES PLAN & DETAILS	153 & 155
(Deleted From This Contract)	154
FUEL OIL UNLOADING AND STORAGE FACILITIES	
PLAN & DETAILS	156 - 159
OIL WATER SEPARATOR	160
SLUDGE THICKENER TANK	
PLAN & DETAILS	161 - 163
(Deleted From This Contract)	164 - 166
FILTER ROOM PIPING	167 - 176
DRYER ROOM PIPING	177
INSTRUMENTATION SCHEMATIC	178 178B
ELECTRICAL	179 - 196
SLUDGE DRYING EQUIPMENT DRAWING	197 - 199
PROCESS FLOW SCHEMATIC	200

DWG. NO. 18045

REV.

PART NO. 21-1111

CHARLEY & MOSLEY, INC. Consulting Engineers

- [ ] NO EXCEPTIONS NOTED
- [ ] MAKE CORRECTIONS NOTED
- [ ] REVISE AND RESUBMIT FOR APPROVAL
- [ ] RETURNED FOR CORRECTION

Review does not relieve contractor of responsibility for conformity with contract requirements, contract details and fit of parts when assembled.

CHARLEY & MOSLEY, INC. BY _____ DATE 5/24/78

CITY OF HOUSTON BY _____ DATE _____

AS BUILT SHOP DRAWING

B-21-1005

JOB NO. 3504 DS W. W. RECORDS

MICROFILM

DATE 6/24/82

CONTRACT NO. 4152

J-0

FOR SOOT BLOWER

HEADER

SCALE —	DATE 4-6-78
DRAWN BY F	CHECKED BY [illegible]
TRACED BY	APPROVED MHJ 4-7-78

COMBUSTION ENGINEERING, INC.

THIS DRAWING IS THE PROPERTY OF COMBUSTION ENGINEERING, INC. AND IS NOT TO BE REPRODUCED, OR USED TO FURNISH ANY INFORMATION FOR MAKING OF DRAWINGS OR APPARATUS EXCEPT WHERE PROVIDED FOR BY AGREEMENT WITH SAID COMPANY.

DRAWING NO. A-21-1111-0

DWG. NO. 18045 (SHT NO. 1 OF)

E5+00 E6+00 E7+00 E8+00 E9+00 E10+00 E11+00 E12+00 E13+00 E14+00 E15+00 E16+00 E17+00 E18+00

N5+00 N4+00 N3+00 N2+00 N1+00 0+00 S1+00 S2+00 S3+00 S4+00 S5+00

MATCH LINE EAST 5+50

CITY BENCH MARK

CITY SURVEY MARKER 5351
CITY SURVEY MARKER 0116
EL. 54.67

N

21" STORM SEWER (UNDER SEPARATE CONTRACT)
TYPE "F" INLET (UNDER SEPARATE CONTRACT)
24" STORM SEWER (UNDER SEPARATE CONTRACT)
TYPE "F" INLET (UNDER SEPARATE CONTRACT)
EXISTING FENCE
30" STORM SEWER (UNDER SEPARATE CONTRACT)
℄ DITCH (UNDER SEPARATE CONTRACT)
TYPE "C" M.H. w/"F" INLET TOP (UNDER SEPARATE CONTRACT)
6" SCUM LINE (UNDER SEPARATE CONTRACT)
2" WATER LINE (UNDER SEPARATE CONTRACT)
24" STORM SEWER (UNDER SEPARATE CONTRACT)
TYPE "F" INLET (UNDER SEPARATE CONTRACT)
℄ DITCH (UNDER SEPARATE CONTRACT)
EXISTING 7' CHAIN LINK FENCE ON PROPERTY LINE
30" STORM SEWER (UNDER SEPARATE CONTRACT)
16" SLUDGE LINE (UNDER SEPARATE CONTRACT)
AERATION TANKS (UNDER SEPARATE CONTRACT)
℄ 20' SHELL ROADWAY (UNDER SEPARATE CONTRACT)
BASE LINE = N 0+00
42" FORCE MAIN (UNDER SEPARATE CONTRACT)
36" AIR LINES (UNDER SEPARATE CONTRACT)
℄ 12' ASPHALT ROADWAY (UNDER SEPARATE CONTRACT)
67'-24" STORM SEWER (UNDER SEPARATE CONTRACT)
RAILROAD SPUR TRACK NO.1 (UNDER SEPARATE CONTRACT)
℄ 20' ASPHALT ROADWAY (UNDER SEPARATE CONTRACT)
42" FORCE MAIN (UNDER SEPARATE CONTRACT)
8" WATER LINE (UNDER SEPARATE CONTRACT)
4" WATER LINE (UNDER SEPARATE CONTRACT)
TYPE 'C' M.H. (UNDER SEPARATE CONTRACT)
COMPRESSOR BUILDING (UNDER SEPARATE CONTRACT)
42" STORM SEWERS (UNDER SEPARATE CONTRACT)
RAILROAD SPUR TRACK NO.2 (UNDER SEPARATE CONTRACT)
TYPE 'C' M.H. (UNDER SEPARATE CONTRACT)
48" STORM SEWER (UNDER SEPARATE CONTRACT)
℄ DITCH (UNDER SEPARATE CONTRACT)
EXIST. BARBED WIRE FENCE
H.L. & P. CO. 50' R.O.W.
POWER POLE
TOWER
7' CHAIN LINK (UNDER SEPARATE CONTRACT)
SHELL PIPE LINE CORP. 30' R.O.W.

NOTE:

PRIOR TO PLACING OF ADDITIONAL FILL, THE CONTRACTOR SHALL DISC, WINDROW AND RE-COMPACT TO 98% STANDARD PROCTOR DENSITY, THE ENTIRE SITE BETWEEN E 5+00 AND E 14+50. AFTER STRIPPING SOIL SHALL BE DISCED TO MIN. DEPTH OF 6" PRIOR TO PLACEMENT OF ADDITIONAL STRUCTURAL FILL

REV.NO.	DATE	DESCRIPTION	DESIGN	CHECKED
3	6-77	REVISED EXISTING TOPOGRAPHIC SURVEY & DELETED FENCE.	J.C.S.	K.R.L.
2	3-77	8" AIR LINE DELETED & RAILROAD SPUR TRACK MODIFIED	J.C.	S.R.S.
1	4-76	ADDED 8" AIR LINE	J.J.	D.R.Y.

STATE OF TEXAS — PAUL R. HOLMES — 27638 — REGISTERED PROFESSIONAL ENGINEER

STATE OF TEXAS — JAMES A. BINKLEY — 24282 — REGISTERED PROFESSIONAL ENGINEER

CITY OF HOUSTON
DEPARTMENT OF PUBLIC WORKS

ALMEDA SIMS
SLUDGE DISPOSAL
PLANT - 1973

EXISTING
TOPOGRAPHY

RECOMMENDED FOR APPROVAL:
BINKLEY & HOLMES, INC., CONSULTING ENGINEERS

APPROVED:
CHIEF ENGINEER — ASST. CHIEF ENGINEER
ASST. DIRECTORS OF PUBLIC WORKS
DIRECTOR OF PUBLIC WORKS

DESIGNED BY: M. D. J.
DRAWN BY: G. DORMAN
CHECKED BY: M. D. J.
SCALE: 1" = 50'
DATE: DECEMBER 1973
SHEET 2 OF 200 SHEETS
DRAWING NO. 13045

B- S1-1770 | REVISION

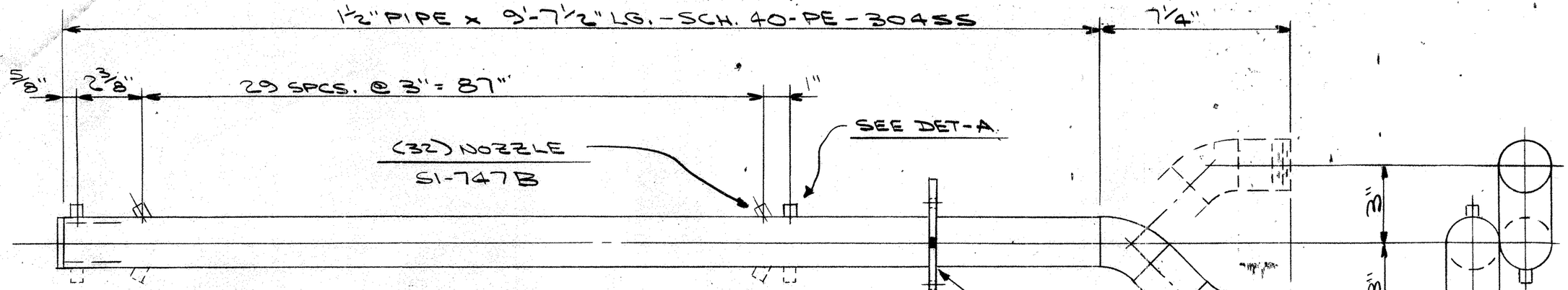

S1-1770

(2) PIPE & NOZZLE ASSEM. (AS SHOWN) WELDED TO MAKE (1) FINISHED ASSEM.

MTG. PL

SHOP TO INSTALL (DO NOT WELD) BEFORE TACK WELDING PIPES TOGETHER & WELDING ELBOWS IN PLACE

1½" PIPE x 2" LG. SCH. 40-PE 304SS

1½" PIPE x 2" LG. SCH. 40-TOE 304SS

(2) 1½" x 45° WELD. EL. - 304SS

2" x 4" x 3/16" PL 304SS

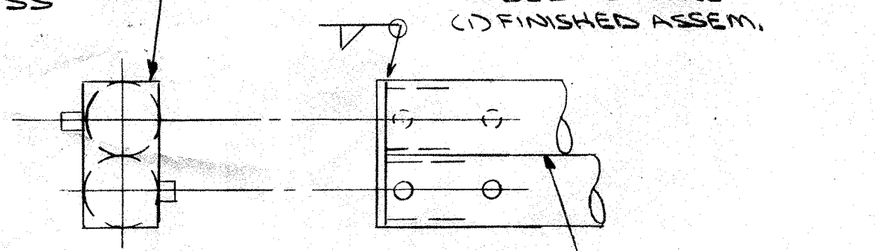

DET-B

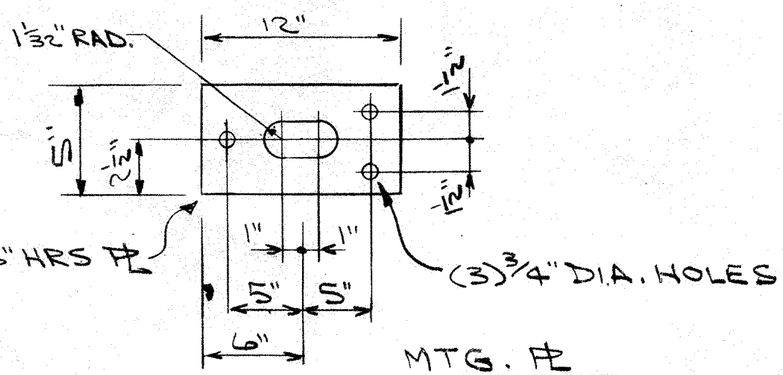

MTG. PL

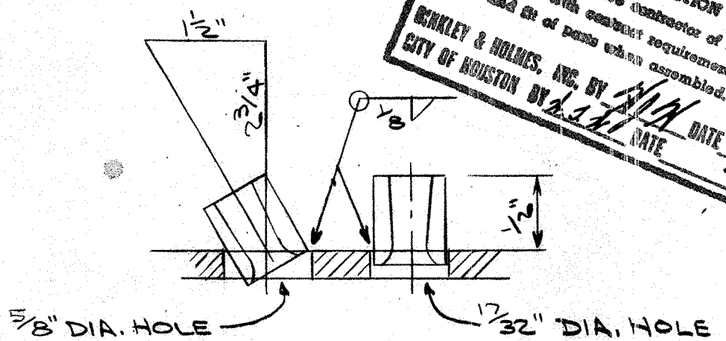

DET-A

ASBUILT SHOP DRAWING

C-S1-1604

KIRKLEY & HOLMES, INC. Consulting Engineers
NO EXCEPTIONS NOTED
EXCEPTIONS NOTED
SUBMIT SPECIFIED ITEMS FOR RESUBMISSION
SUBMIT FOR RECORD PURPOSES
SUBMIT FOR CORRECTION
Review does not relieve contractor of responsibility for conformity with contract requirements, correct details and fit of parts when assembled.
KIRKLEY & HOLMES, INC. BY [illegible] DATE 5/4/78
CITY OF HOUSTON BY [illegible] DATE

W. W. RECORDS
MICROFILM
DATE 6/26/82

JOB NO. 3304-DS

J-O

CONTRACT NO. 41277

SOOT BLOWER

FOR

SCALE 3"=1'-0" DRAWN BY L TRACED BY

DATE 4-6-78 CHECKED BY S.S. APPROVED [illegible] 4-7-78

THIS DRAWING IS THE PROPERTY OF COMBUSTION ENGINEERING, INC.

AND IS NOT TO BE REPRODUCED, OR USED TO FURNISH ANY INFORMATION FOR MAKING OF DRAWINGS OR APPARATUS EXCEPT WHERE PROVIDED FOR BY AGREEMENT WITH SAID COMPANY.

DRAWING NO. B-S1-1770-O

DWG. NO. 18045 (SHT. NO. 2 OF)

C-FD-1602

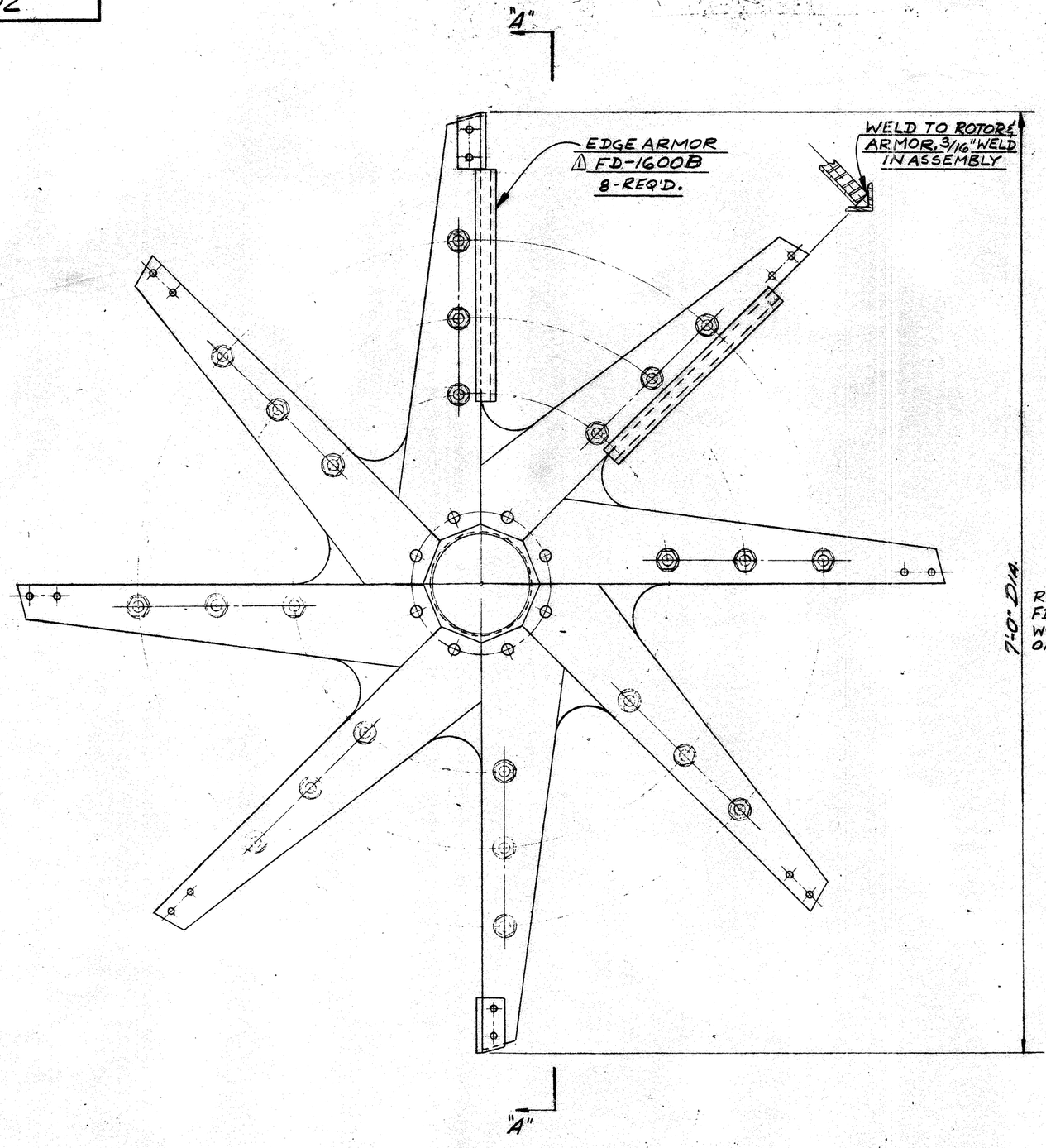

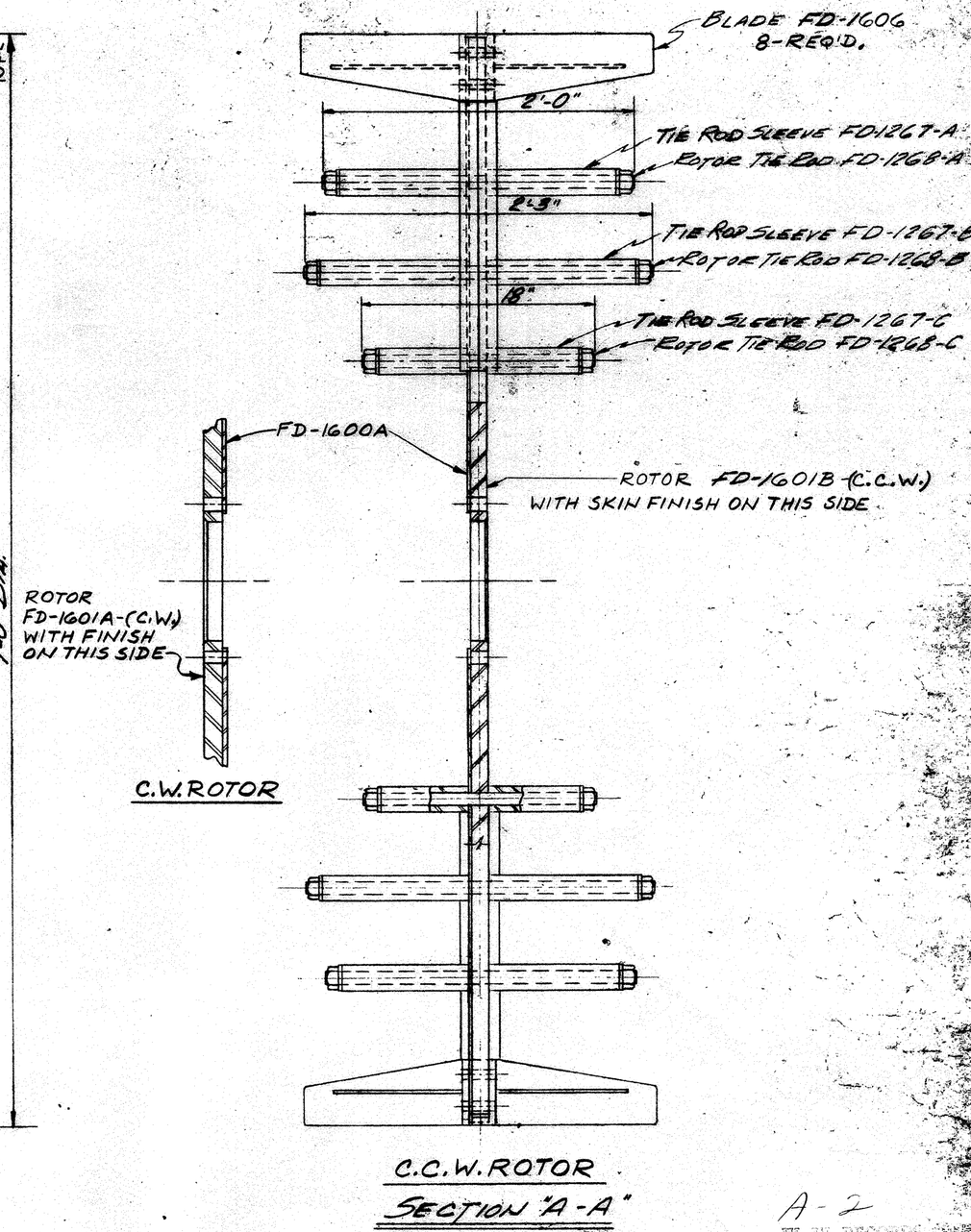

C.C.W. ROTOR
SECTION "A-A"

⚠2 ROTOR MUST BE STATICALLY BALANCED
ASSEMBLY FD-1602B C.C.W. AS SHOWN
ASSEMBLY FD-1602A C.W. OPP. HAND

BARKLEY & HOLMES, INC. Consulting Engineers
☑ NO EXCEPTIONS NOTED
☐ EXCEPTIONS NOTED
MAKE AND SUBMIT FOR DISTRIBUTION
☐ RESUBMIT FOR CORRECTION
Review does not relieve contractor of responsibility for conformity with contract requirements, correct details and fit of parts when assembled.
BARKLEY & HOLMES, INC. BY [illegible] DATE 5/24/78
CITY OF HOUSTON BY [illegible] DATE

ASBUILT SHOP DRAWING

A-2
W. W. RECORDS
MICROFILM
DATE 6/26/82

JOB NO. 3304-DS
40771
CONTRACT NO. 43666

TITLE ROTOR ASSEMBLY
FOR #375-30 CAGE MILL
CITY OF HOUSTON, TEXAS

SCALE 1½"=12"	APPR. [illegible]	DATE 9-9-66	
DRAWN J.S.	DATE 5-3-66	CHKD. C.J.C.	
	DATE	CHKD.	

THIS DRAWING IS THE PROPERTY OF
COMBUSTION ENGINEERING, INC.
RAYMOND DIV., CHICAGO, ILL.
AND IS NOT TO BE REPRODUCED, OR USED TO FURNISH ANY INFORMATION FOR MAKING OF DRAWINGS OR APPARATUS EXCEPT AS PROVIDED FOR BY AGREEMENT WITH SAID COMPANY.

C-FD-1602-2

DWG. NO. 18045 (SHT. NO. 3 OF -)

4		5	
1	EDGE ARMOR FD-1600B WAS FD-1600C. 3-30-76 RJC	2	ROTOR BALANCE NOTE ADDED. 5-20-76 RJC
		3	

C-FD-1787

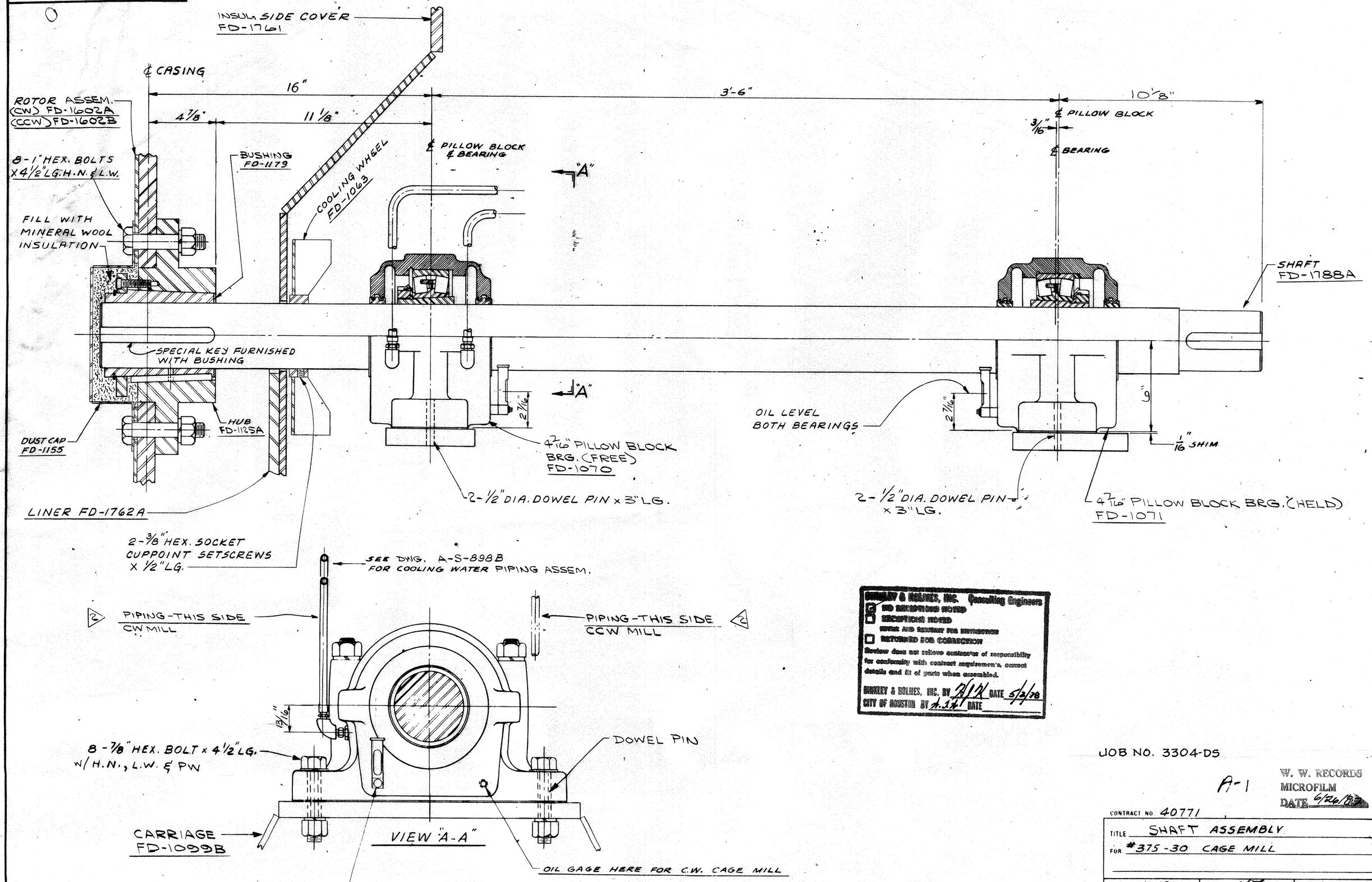

BURKLEY & HOLMES, INC. Consulting Engineers
☑ NO EXCEPTIONS NOTED
☐ EXCEPTIONS NOTED
MAKE AND RESUBMIT FOR INSPECTION
☐ RETURNED FOR CORRECTION
Review does not relieve contractor of responsibility for conformity with contract requirements, correct details and fit of parts when assembled.
BURKLEY & HOLMES, INC. BY [signature] DATE 5/2/78
CITY OF HOUSTON BY [signature] DATE

JOB NO. 3304-DS

A-1

W. W. RECORDS
MICROFILM
DATE 6/26/78

CONTRACT NO. 40771

TITLE SHAFT ASSEMBLY
FOR #375-30 CAGE MILL

SCALE NONE	APPR. [signature]	DATE
DRAWN C.J.C.	DATE 4-29-71	CHKD.
	DATE	CHKD

THIS DRAWING IS THE PROPERTY OF
COMBUSTION ENGINEERING, INC.
RAYMOND DIV. CHICAGO, ILL
AND IS NOT TO BE REPRODUCED OR USED TO FURNISH ANY INFORMATION FOR MAKING OF DRAWINGS OR APPARATUS EXCEPT WHERE PROVIDED FOR BY AGREEMENT WITH SAID COMPANY.

DRAWING NO C-FD-1787-2

ASBUILT SHOP DRAWING
C-FD-1198

4			5		6
1	ADD. PART NOS. & 10 1/8" DIM.	℄ 4-3-77	2	ADD. PIPING NOTES	℄ 4-7-78 3

NOTE:

THE PURPOSE OF THIS DRAWING IS TO FURNISH THE CONTRACTOR WITH GENERAL INFORMATION OF PROPOSED CONSTRUCTION ONLY. THE WORD "PROPOSED" DOES NOT NECESSARILY LIMIT THE CONTRACTOR TO ITEMS SHOWN ON THIS OR OTHER GENERAL PLANS. FOR COMPLETE INFORMATION OF ANY ITEM, CONTRACTOR SHOULD REFER TO THE DETAILED DRAWINGS AND SPECIFICATIONS.

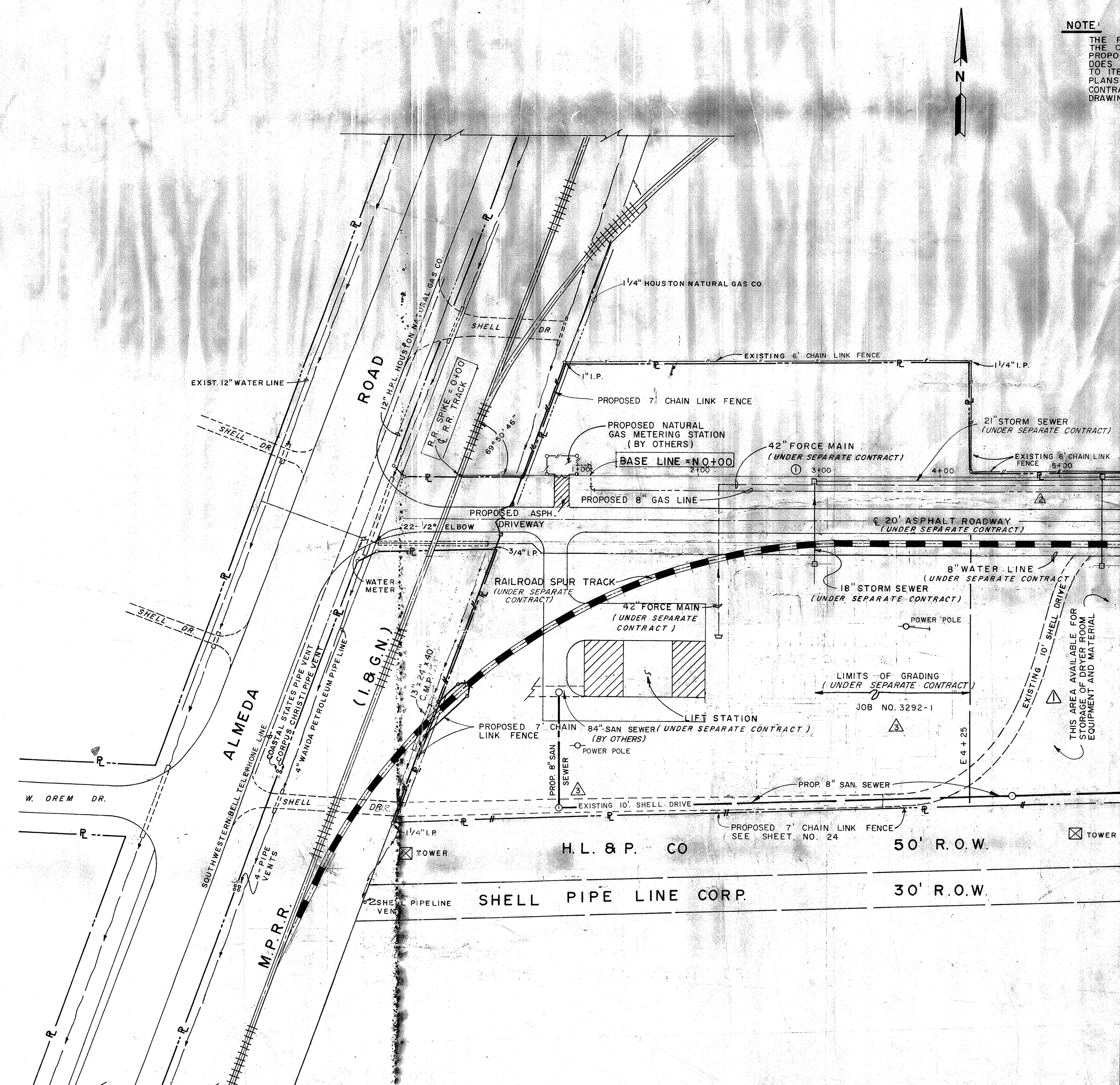

GENERAL NOTE:

Soils preparation under floor slabs and outside equipment slabs to be as follows: Excav. min. 1'~6", scarify exposed subgrade to min. of 6" and compact to 95% Standard Proctor Density, at not less than optimum moisture content. Place select fill material, having a plasticity index of less than 15, on compacted subgrade to the grade shown on plans (after compaction). Compact fill material to 98% Standard Proctor Density. Remainder of subgrade to be the material & thickness as shown on plans.

LEGEND

① PROPOSED TYPE 'F' INLET

② PROPOSED TYPE 'B' INLET

REV. NO.	DATE	DESCRIPTION	DESIGN	CHECKED
3	6-77	GENERAL REVISION	J.C.S.	K.R.L.
2	3-77	PAVING REMOVED, REMOVED NOTE #3	J.C.S.	S.R.S.
1	4-76	ADDED NOTE	J. J.	D.R.Y.

STATE OF TEXAS — JAMES A. BINKLEY — 24282 — REGISTERED PROFESSIONAL ENGINEER

STATE OF TEXAS — PAUL R. HOLMES — 27638 — REGISTERED PROFESSIONAL ENGINEER

CITY OF HOUSTON
DEPARTMENT OF PUBLIC WORKS

ALMEDA SIMS SLUDGE DISPOSAL PLANT — 1973

SITE PLAN

PROPOSED CONSTRUCTION

RECOMMENDED FOR APPROVAL:
Paul R. Holmes
BINKLEY & HOLMES, INC., CONSULTING ENGINEERS

APPROVED:
Walter Williams
CHIEF ENGINEER — ASST. CHIEF ENGINEER
ASST. DIRECTORS OF PUBLIC WORKS
E B Pope
DIRECTOR OF PUBLIC WORKS

DESIGNED BY: M. B. J.
DRAWN BY: I. GONZALEZ
CHECKED BY: M. B. J.
SCALE: 1" = 50'
DATE: DEC. 1973
SHEET 5 OF 200 SHEETS
DRAWING NO. 18045

3

S1-1608

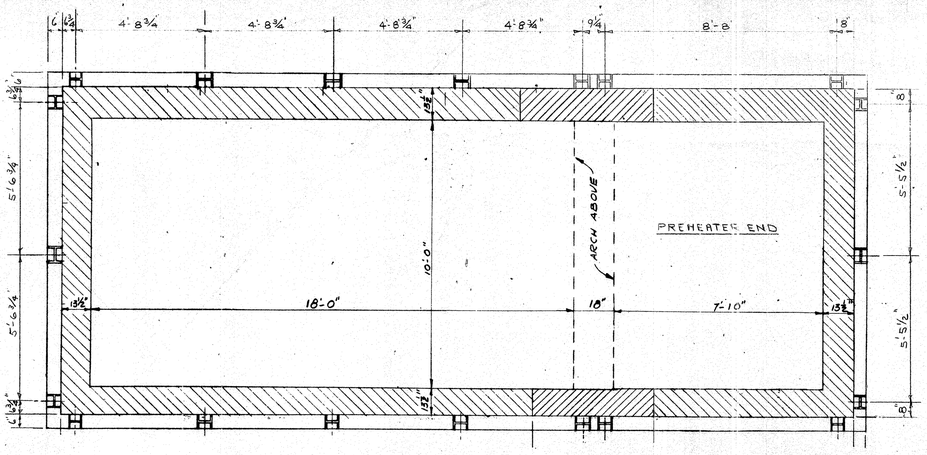

SCALE 3/8" = 12"

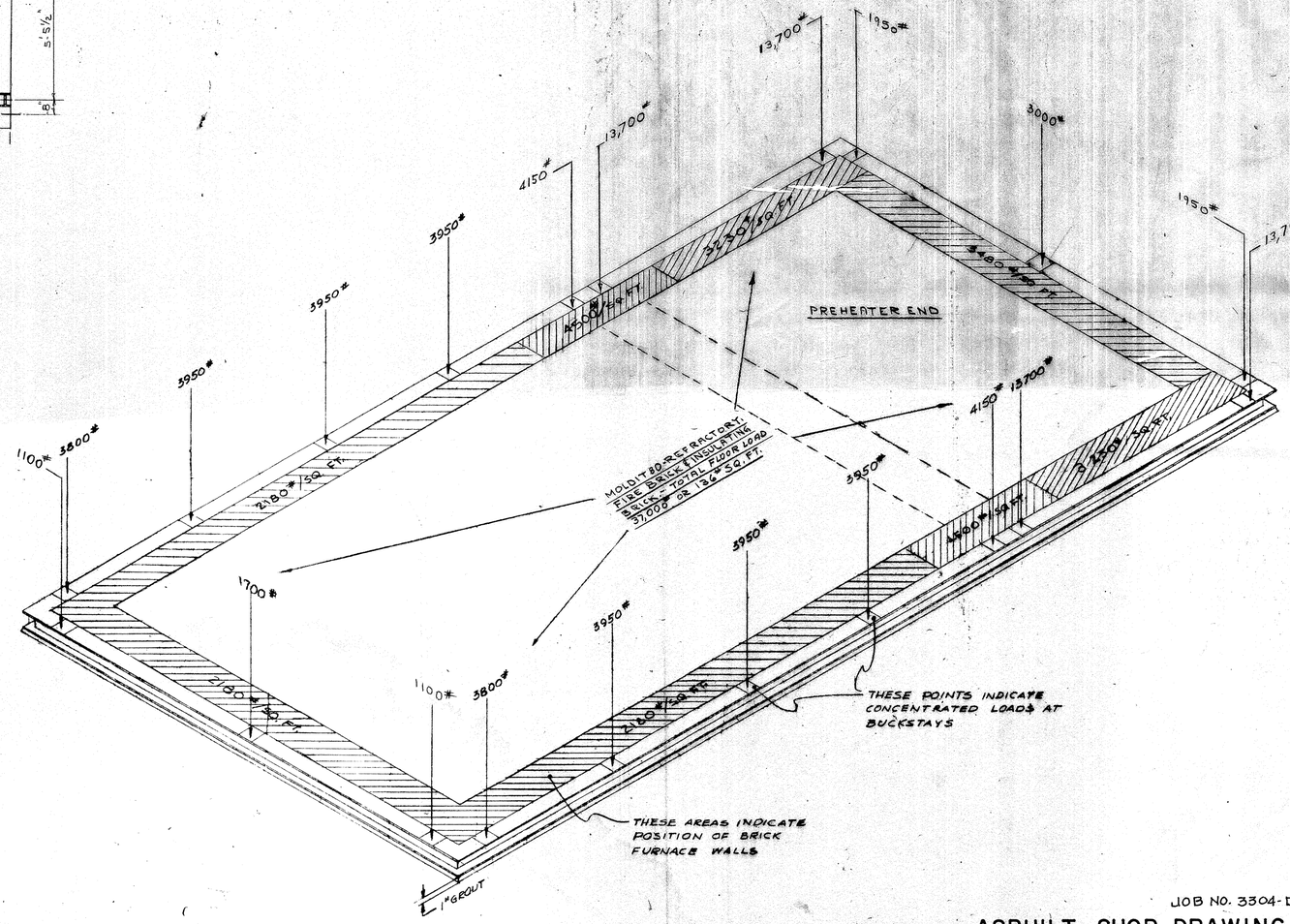

JOB NO. 3304-DS

ASBUILT SHOP DRAWING

W. W. RECORDS MICROFILM DATE 6/6/83 A1377 40771 43666

HINKLEY & HOLMES, INC. Consulting Engineers
☐ NO EXCEPTIONS NOTED
☐ EXCEPTIONS NOTED
☐ REVISE AND RESUBMIT FOR DISTRIBUTION
☐ RETURNED FOR CORRECTION
Review does not relieve contractor of responsibility for conformity with contract requirements, correct details and fit of parts when assembled.
HINKLEY & HOLMES, INC. BY RLM DATE 6-6-78
CITY OF HOUSTON BY ____ DATE ____

TITLE FURNACE LOADING DIAGRAM
FOR CITY OF HOUSTON, TEXAS

SCALE	APPR. RLM	DATE
DRAWN JPB	DATE 8-19-66	CHKD.
TRACED	DATE	CHKD.

THIS DRAWING IS THE PROPERTY OF
COMBUSTION ENGINEERING, INC.
RAYMOND DIV., CHICAGO, ILL.
AND IS NOT TO BE REPRODUCED, OR USED TO FURNISH ANY INFORMATION FOR MAKING OF DRAWINGS OR APPARATUS EXCEPT WHERE PROVIDED FOR BY AGREEMENT WITH SAID COMPANY.

DRAWING NO. D- S1-1608-0

DWG. NO. 18045 (SHT. NO. 5 OF

5	6	7	8
1	2	3	4

Dietzgen No. 187A Halton Form 195-A

NOTE:

THE PURPOSE OF THIS DRAWING IS TO FURNISH THE CONTRACTOR WITH GENERAL INFORMATION OF PROPOSED CONSTRUCTION ONLY. THE WORD "PROPOSED" DOES NOT NECESSARILY LIMIT THE CONTRACTOR TO ITEMS SHOWN ON THIS OR OTHER GENERAL PLANS. FOR COMPLETE INFORMATION OF ANY ITEM, CONTRACTOR SHOULD REFER TO THE DETAILED DRAWINGS AND SPECIFICATIONS.

LEGEND

① PROPOSED TYPE "F" INLET
② PROPOSED TYPE "B" INLET
③ PROPOSED TYPE "C" MANHOLE
④ PROPOSED TYPE "C" MANHOLE W/ TYPE "B" GRATE INLET

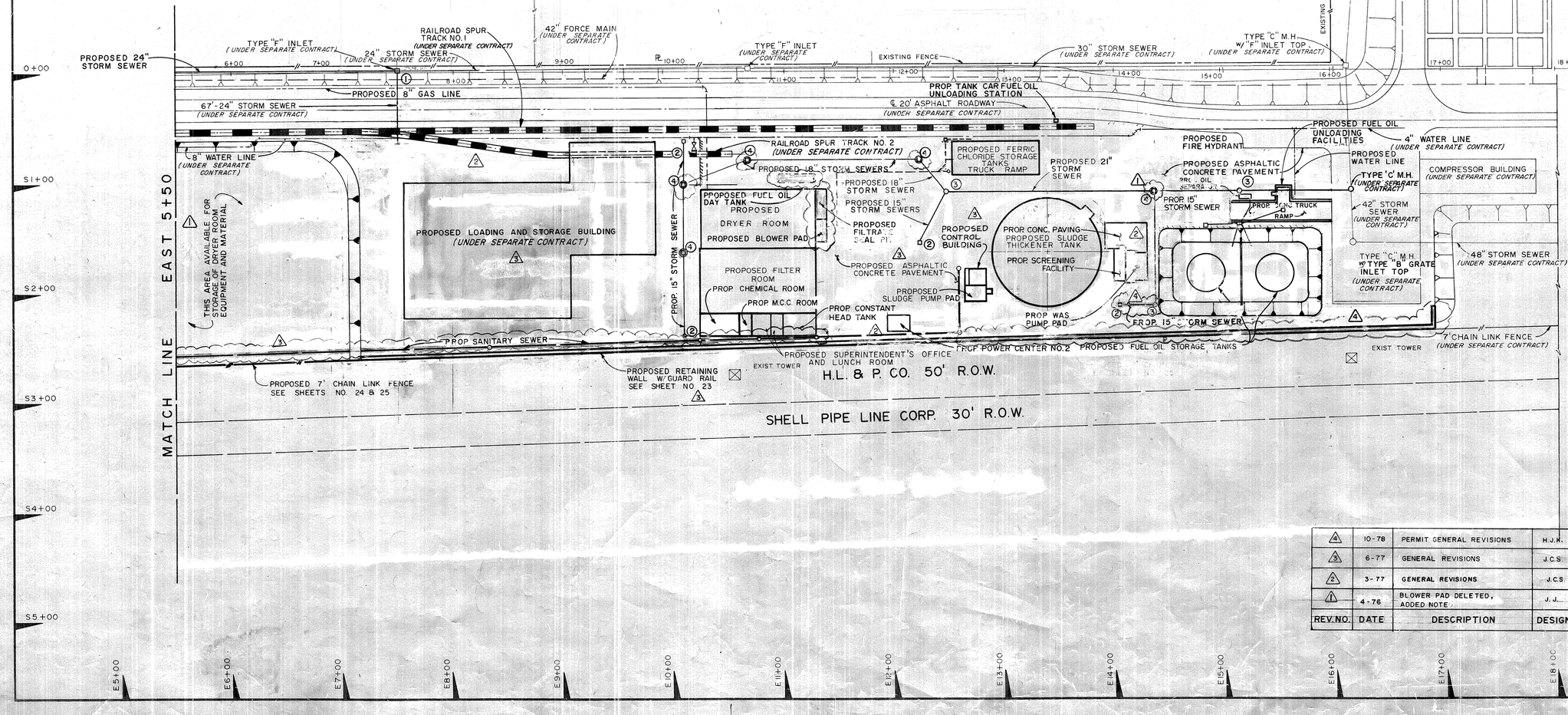

REV.NO.	DATE	DESCRIPTION	DESIGN	CHECKED
4	10-78	PERMIT GENERAL REVISIONS	H.J.K.	K.R.L.
3	6-77	GENERAL REVISIONS	J.C.S.	K.R.L.
2	3-77	GENERAL REVISIONS	J.C.S.	S.R.S.
1	4-76	BLOWER PAD DELETED, ADDED NOTE	J.J.	D.R.Y.

STATE OF TEXAS — PAUL R. HOLMES — 27638 — REGISTERED PROFESSIONAL ENGINEER

STATE OF TEXAS — JAMES A. BINKLEY — 34282 — REGISTERED PROFESSIONAL ENGINEER

CITY OF HOUSTON
DEPARTMENT OF PUBLIC WORKS

ALMEDA SIMS SLUDGE DISPOSAL PLANT – 1973

SITE PLAN
PROPOSED CONSTRUCTION

RECOMMENDED FOR APPROVAL:
BINKLEY & HOLMES, INC., CONSULTING ENGINEERS

APPROVED:
CHIEF ENGINEER — ASST. CHIEF ENGINEER
ASST. DIRECTORS OF PUBLIC WORKS
DIRECTOR OF PUBLIC WORKS

DESIGNED BY: M.D.I., H.R.E.
DRAWN BY: T. YRIGOYEN & G. DORMAN
CHECKED BY: M.D.I. H.R.E.
SCALE: 1" = 50'
DATE: Dec. 973
SHEET 6 OF 200 SHEETS
DRAWING NO. 18045

4

D- 51-1610

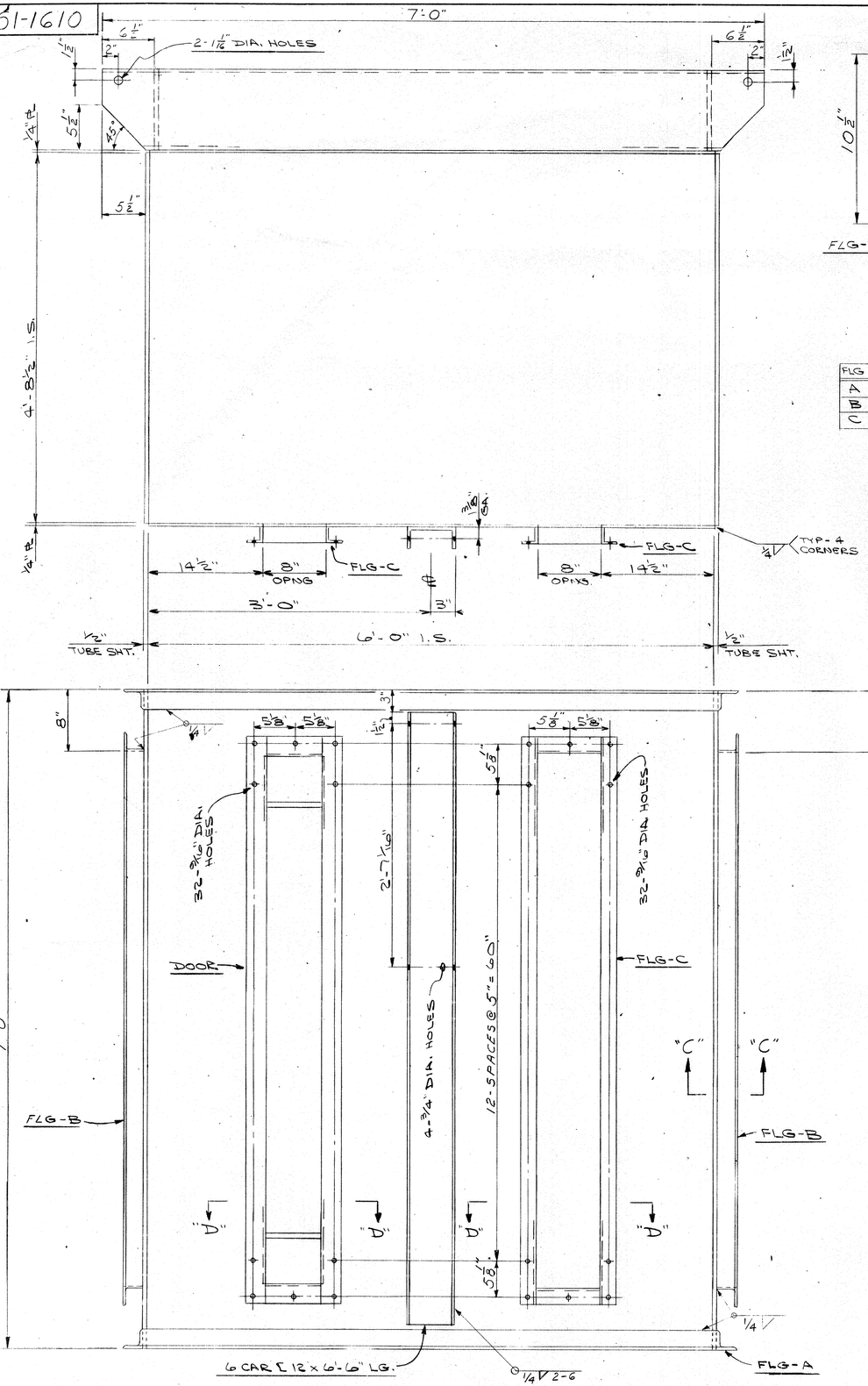

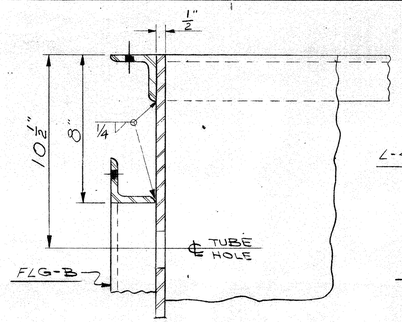

SECTION-"A-A"

FLG	QUAN	DESCRIPTION
A	2	D1-10340 DWG. A-D1-10340
B	2	D1-9737 DWG. A-D1-9737
C	2	SEE DETAIL

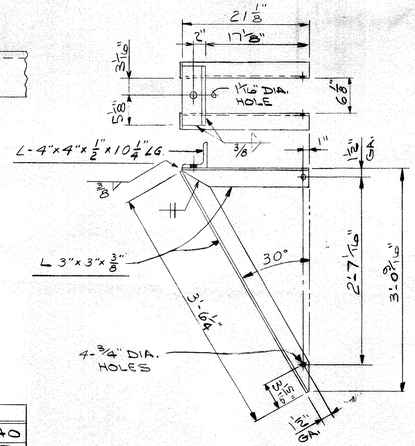

HANGER ROD BRACKET
PART Nº 51-1610 B
EST. WT. = 160 LBS.

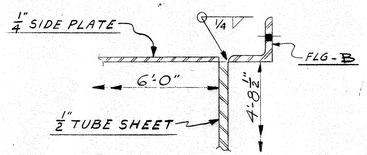

SECTION-"C-C"

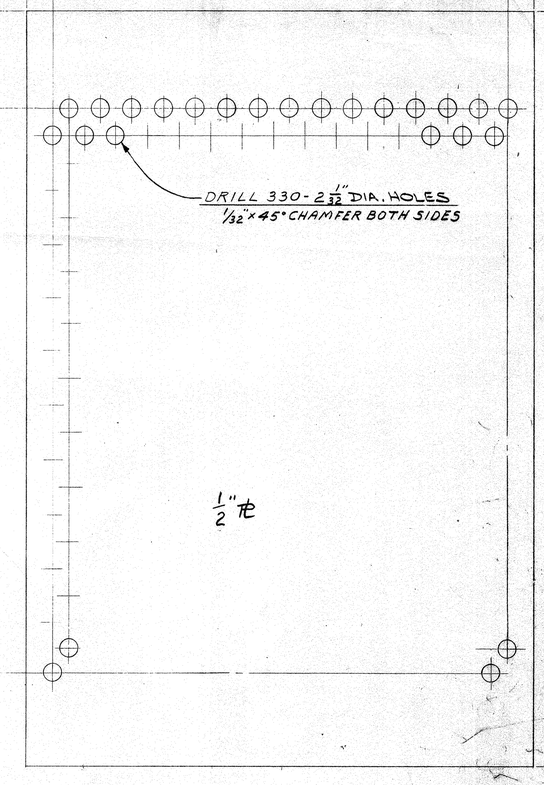

DETAIL OF TUBE SHEET (2-REQ'D.)

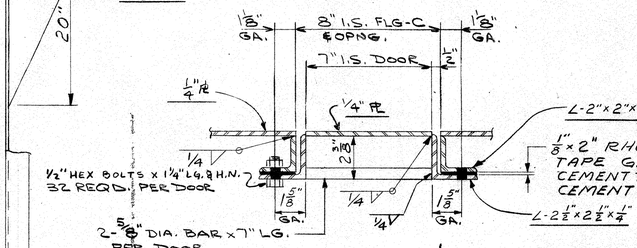

SECTION D-D

EXTERIOR SURFACES TO BE CLEANED BY SANDBLASTING & PAINTED WITH SPATZ #1001-1 PURE (UNMODIFIED) SILICONE ALUMINUM PAINT.

DO NOT SANDBLAST TUBE SHEETS. COAT EXTERIOR SURFACE OF TUBE SHEETS WITH A RUST PREVENTING COATING OIL.

MAT'L.
HOT ROLLED CARBON STL.

STRUCTURAL SHAPES	ASTM-A 36
BAR SIZE SHAPES	M-1020
PLATE	ASTM A-283 GR. C

PART Nº 51-1610 A
EST. WT. = 2670 LBS.

ASBUILT SHOP DRAWING

HINKLEY & HOLMES, INC. Consulting Engineers
☑ NO EXCEPTIONS NOTED
☐ EXCEPTIONS NOTED
☐ ISSUED AND RELEASED FOR DISTRIBUTION
☐ RETURNED FOR CORRECTION
Review does not relieve contractor of responsibility for conformity with contract requirements, correct details and fit of parts when assembled.
HINKLEY & HOLMES, INC. BY [signature] DATE 6/6/70
CITY OF HOUSTON BY [signature] DATE

JOB NO. 3304-DS T-3
W. W. RECORDS 41277 40771
MICROFILM DATE 6/26/73
CONTRACT NO 43666

TITLE C. A. PREHEATER
FOR CITY OF HOUSTON

SCALE 1 1/2"=1'-0"	APPR.		DATE 9-20-66
DRAWN J.D.M.	DATE 8-5-66		CHKD
TRACED	DATE		CHKD

THIS DRAWING IS THE PROPERTY OF COMBUSTION ENGINEERING INC RAYMOND DIV., CHICAGO, ILL. AND IS NOT TO BE REPRODUCED, OR USED TO FURNISH ANY INFORMATION FOR MAKING OF DRAWINGS OF APPARATUS EXCEPT WHERE PROVIDED FOR BY AGREEMENT WITH SAID COMPANY

DRAWING NO D- 51-1610-3

DWG. NO. 18045 (SHT. NO. 6 OF [illegible])

5		6	
1	A-36 WAS A7 & NOTES ADDED 6-23-71	2	PAINTING INSTRUCTIONS ADDED 9-15-71
		3	HANGER BRKT: 2-7/16" DIA 2-7/8 1/2", REMOVED TUBES, REV. METHOD OF DIMS., ADD. FLG. TABLE & WTS 4-15-77
7		8	
4			

CITY BENCH MARK
5351
CITY SURVEY MARKER 0116
EL. 54.67

NOTE:
FOR FENCE DETAILS
SEE SHEET NO. 24

N

W1+00 | 0+00 | E1+00 | E2+00 | E3+00 | E4+00 | E5+00 | E6+00 | E7+00 | E8+00

N1+00 | 0+00 | S1+00 | S2+00 | S3+00 | S4+00 | S5+00

℄ ALMEDA ROAD

M.P. R.R. (I & G.N.)

POWER POLE
1" I.P.

EXISTING 6' CHAIN LINK FENCE

1 1/4" I.P.

PROPOSED 7' CHAIN LINK FENCE

1 1/4" HOUSTON NATURAL GAS CO.

PROPOSED NATURAL GAS METERING STATION
(BY OTHERS)

R.R. SPIKE & R.R. TRACK

69° 50' 46"

N 0+08.50

42" FORCE MAIN
(UNDER SEPARATE CONTRACT)

TYPE "F" INLET
(UNDER SEPARATE CONTRACT)

BASE LINE = N 0+00

EXISTING 6' CHAIN LINK FENCE

TYPE "F" INLET
(UNDER SEPARATE CONTRACT)

24" STORM SEWER
(UNDER SEPARATE CONTRACT)

PROPOSED ASPHALT DRIVEWAY

S 0+07.00

S 0+12.00

21" STORM SEWER
(UNDER SEPARATE CONTRACT)

PROPOSED 8" GAS LINE

2 PROPOSED 12' GATES

18" STORM SEWER
(UNDER SEPARATE CONTRACT)

℄ 20' ASPHALT ROADWAY
(UNDER SEPARATE CONTRACT)

S 0+34.00

PROP. 18" R.C.P. 30' LG.

RAILROAD SPUR TRACK
(UNDER SEPARATE CONTRACT)

18" STORM SEWER
(UNDER SEPARATE CONTRACT)

8" WATER LINE
(UNDER SEPERATE CONTRACT)

S 0+52.00

S 0+65.00

8" WATER LINE
(UNDER SEPARATE CONTRACT)

TYPE "F" INLET
(UNDER SEPERATE CONTRACT)

TYPE "F" INLET
(UNDER SEPARATE CONTRACT)
THROAT ELEV. 49.00

POWER POLE & GUY WIRE

LIMITS OF GRADING
(UNDER SEPARATE CONTRACT)
JOB NO. 3292-1

℄ 20' WIDE SAND STABILIZED SHELL DRIVEWAY

PROP. SURFACING SEE STORAGE AREA SURFACING DETAIL THIS SHT.

PROP. 7'-0" CHAIN LINK FENCE

EXISTING 10' SHELL DRIVE

ANY EXCESS EXCAVATION TO BE DEPOSITED IN THIS AREA IN LIFTS NOT TO EXCEED TWO FEET AND LEVELED FOR DRAINAGE

EQUIPMENT STORAGE AREA FOR CONTRACT E-1 SURFACING AND FENCING TO BE COMPLETED WITHIN 30 DAYS FOLLOWING NOTICE TO PROCEED

MATCH LINE EAST 7+50

2-PROPOSED 12' GATES

(BY OTHERS)
PROP. 84" SAN. SEWER

0+00 ℄ PROP. MH. BY OTHERS = S-1170= E-0185

LIFT STATION
(UNDER SEPARATE CONTRACT)

PROPOSED 7' CHAIN LINK FENCE

1+01 ℄ PROP MH.= S 2171= E-0185

PROPOSED SANITARY SEWER
(FOR PROFILE SEE SHTS 20 & 21)

12" C.M.P.

PROPOSED 7' CHAIN LINK FENCE

H.L. & P. CO. 50' R.O.W.

4+77 ℄ PROP MH= E 4+61

TOWER

POWER POLE & GUY WIRE

POWER POLE

SHELL PIPE LINE CORP. 30' R.O.W.

PROPOSED 7' CHAIN LINK FENCE

STA. 7+15 BEGIN RETAINING WALL

T.W. 54.50

10" SAND STABILIZED SHELL BASE COURSE

℄ FENCE

2% SLOPE

1'-0" | 10" | 1'-0"

6" LIME (5%) STABILIZATION AND COMPACTION TO 95% STANDARD PROCTOR DENSITY

STORAGE AREA SURFACING DETAIL
Scale: 3/8" = 1'-0"

LEGEND

—50— EXISTING CONTOURS
—50— PROPOSED CONTOURS
x 50.74 EXISTING ELEVATIONS

REV. NO.	DATE	DESCRIPTION	DESIGN	CHECKED
5	10-78	PERMIT REVISION REV. DRAINAGE AND RELOCATE EQUIPMENT STORAGE AREA	H.J.K.	K.R.L.
4	9-77	ADDED STORAGE AREA AND FENCING	K.L.	K.L.
3	6-77	GENERAL REVISION	J.S.	K.L.
2	3-77	GRADING, RAILROAD SPUR AND 8" WATER LINE REVISED	J.J.	S.R.S.
1	4-76	ADDED NOTE	J.J.	D.R.Y.

JAMES A. BINKLEY 24286 REGISTERED PROFESSIONAL ENGINEER

PAUL R. HOLMES 27638 REGISTERED PROFESSIONAL ENGINEER

CITY OF HOUSTON
DEPARTMENT OF PUBLIC WORKS

ALMEDA SIMS
SLUDGE DISPOSAL
PLANT - 1973

GRADING & DRAINAGE

RECOMMENDED FOR APPROVAL:
BINKLEY & HOLMES, INC., CONSULTING ENGINEERS

APPROVED:
CHIEF ENGINEER — ASST. CHIEF ENGINEER

ASST. DIRECTORS OF PUBLIC WORKS
DIRECTOR OF PUBLIC WORKS

DESIGNED BY: M. D. J.
DRAWN BY: G. DORMAN
CHECKED BY: M. D. J.
SCALE: 1" = 30'
DATE: Dec., 1973
SHEET 7 OF 200 SHEETS
DRAWING NO. 18045

5

D-51-1700 | REVISION

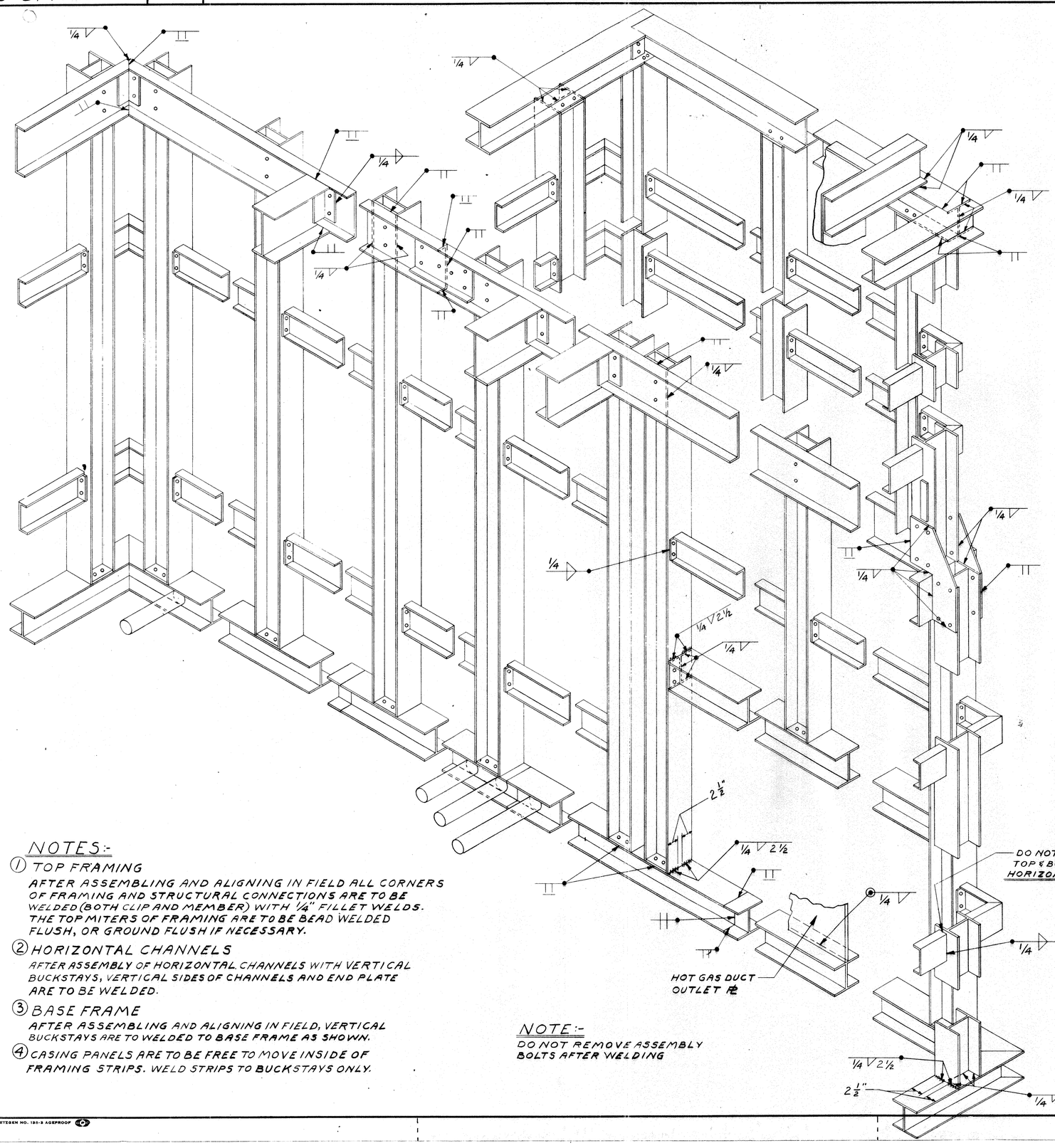

DO NOT WELD TOP & BOTTOM OF HORIZONTAL BUCKSTAYS

NOTE:-
DO NOT REMOVE ASSEMBLY BOLTS AFTER WELDING

NOTES:-

1. TOP FRAMING
   AFTER ASSEMBLING AND ALIGNING IN FIELD ALL CORNERS OF FRAMING AND STRUCTURAL CONNECTIONS ARE TO BE WELDED (BOTH CLIP AND MEMBER) WITH 1/4" FILLET WELDS. THE TOP MITERS OF FRAMING ARE TO BE BEAD WELDED FLUSH, OR GROUND FLUSH IF NECESSARY.
2. HORIZONTAL CHANNELS
   AFTER ASSEMBLY OF HORIZONTAL CHANNELS WITH VERTICAL BUCKSTAYS, VERTICAL SIDES OF CHANNELS AND END PLATE ARE TO BE WELDED.
3. BASE FRAME
   AFTER ASSEMBLING AND ALIGNING IN FIELD, VERTICAL BUCKSTAYS ARE TO WELDED TO BASE FRAME AS SHOWN.
4. CASING PANELS ARE TO BE FREE TO MOVE INSIDE OF FRAMING STRIPS. WELD STRIPS TO BUCKSTAYS ONLY.

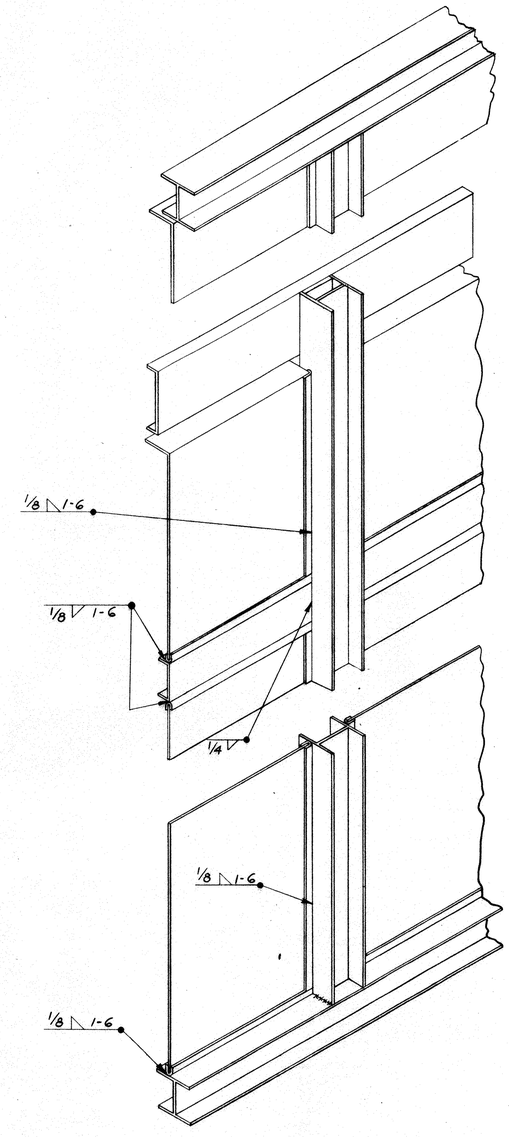

TYPICAL VIEW SHOWING METHOD OF FASTENING FURNACE CASING

BINKLEY & HOLMES, INC. Consulting Engineers
☒ NO EXCEPTIONS NOTED
☐ EXCEPTIONS NOTED
☐ REVISE AND RESUBMIT FOR DISTRIBUTION
☐ RETURNED FOR CORRECTION
Review does not relieve contractor of responsibility for conformity with contract requirements, correct details and fit of parts when assembled.
BINKLEY & HOLMES, INC. BY [illegible] DATE 5/6/38
CITY OF HOUSTON BY [illegible] DATE

ASBUILT SHOP DRAWING

D-51-1611

W. W. RECORDS MICROFILM DATE 9/20/82

JOB NO. 3304-D5

41277

RAYMOND DIVISION, CHICAGO, ILL. CONTR. NO. 40771

FIELD WELDING FOR FURNACE

FOR CITY OF HOUSTON

SCALE ~ DRAWN BY M. E. J. TRACED BY
DATE 5-3-71 CHECKED BY [illegible] APPROVED [illegible]

THIS DRAWING IS THE PROPERTY OF COMBUSTION ENGINEERING, INC. AND IS NOT TO BE REPRODUCED, OR USED TO FURNISH ANY INFORMATION FOR MAKING OF DRAWINGS OR APPARATUS EXCEPT WHERE PROVIDED FOR BY AGREEMENT WITH SAID COMPANY.

DRAWING NO. D-51-1700-0

DWG. NO. 18045 (SHT. NO. 7 OF [illegible])

DIETZGEN NO. 135-3 AGEPROOF

CITY BENCH MARK
CITY SURVEY MARKER 5351 0116
El. 54.67

NOTE:
FOR FENCE DETAILS SEE SHEET NO. 24

N

TYPE 'F' INLET (Under Separate Contract)
N0+01.00 E7+52.08
EXISTING 7' CHAIN LINK FENCE
PROPOSED 7' CHAIN LINK FENCE
24" STORM SEWER (UNDER SEPARATE CONTRACT)
N0+01.00 E10+75.00
TYPE 'F' INLET (UNDER SEPARATE CONTRACT)
EXISTING 7' CHAIN LINK FENCE
30" STORM SEWER (UNDER SEPARATE CONTRACT)
TYPE 'C' M.H. W/ INLET TOP (UNDER SEPARATE CONTRACT)
2" WATER LINE (UNDER SEPARATE CONTRACT)
6" SCUM LINE (UNDER SEPARATE CONTRACT)
30" STORM SEWER (UNDER SEPARATE CONTRACT)
24" SLUDGE LINE (UNDER SEPARATE CONTRACT)
℄ 20' SHELL ROADWAY (UNDER SEPARATE CONTRACT)
AERATION TANK (UNDER SEPARATE CONTRACT)
BASE LINE = N 0+00
S 0+12.00
S 0+07.00
S 0+15.00
42" FORCE MAIN (UNDER SEPARATE CONTRACT)
PROPOSED 8" GAS LINE
24" STORM SEWER (Under Separate Contract)
S 0+34.00
S 0+52.00
℄ 20' ASPHALT ROADWAY (UNDER SEPARATE CONTRACT)
RAILROAD SPUR TRACKS (UNDER SEPARATE CONTRACT)
PROP TANK CAR FUEL OIL UNLOADING STATION D 157
S 0+46.00
S 0+55.00
4" WATER LINE (UNDER SEPARATE CONTRACT)
36" AIR LINE (UNDER SEPARATE CONTRACT)
8" WATER LINE (UNDER SEPARATE CONTRACT)
8" WATER LINE (UNDER SEPARATE CONTRACT)
PROP 8" PVC DRAIN LINE
PROPOSED 18" STORM SEWER
PROPOSED FUEL OIL DAY TANK
PROPOSED FERRIC CHLORIDE STORAGE TANKS
TRUCK RAMP
PROP 6" WATER LINE
PROP 2" WATER LINE
PROP 1" WATER
PROP ASPHALTIC CONC. PAVEMENT
PROP OIL SEPARATOR
COMPRESSOR BUILDING (UNDER SEPARATE CONTRACT)
PROPOSED 21" STORM SEWER
PROP CONC. PAVEMENT
PROP 15" STORM SEWER
PROP CONC. TRUCK RAMP SEE SHT. 156
TYPE 'C' M.H. (UNDER SEPARATE CONTRACT)
PROP FILTRATE SEAL PIT
PROPOSED DRYER ROOM
PROPOSED 15" STORM SEWERS
PROP AIR LIFT BLOWER PAD
PROP 6" VALVE & BOX
PROP FIRE HYDRANT
PROPOSED SLUDGE THICKENER TANK
PROP 15" O.D. VALVE BOX
42" STORM SEWER (UNDER SEPARATE CONTRACT)
PROPOSED LOADING AND STORAGE BUILDING (UNDER SEPARATE CONTRACT)
15" STUB
PROPOSED 6" WATER LINE
PROPOSED FILTER ROOM
PROPOSED CHEMICAL ROOM
PROPOSED M.C.C. ROOM
PROPOSED ASPHALTIC CONCRETE PAVEMENT
PROPOSED CONTROL BUILDING
PROP SCREENING FACILITY
PROP W.A.S. PUMP PAD
PROP ASPHALT PAVEMENT
PROPOSED SLUDGE PUMP PAD
TYPE 'C' M.H. (UNDER SEPARATE CONTRACT)
48" STORM SEWER (UNDER SEPARATE CONTRACT)
END RETAINING WALL E 16+91
T.W. EL. 54.50
PROPOSED SANITARY SEWER
8+53 ℄ PROP. MH = E-8+37
PROPOSED POWER CENTER No. 1
PROPOSED POWER CENTER No. 2
11+74 ℄ PROP. MH = E-11+36
12+98 ℄ PROP. MH = E-12+60
FOR PROFILE (SEE SHEETS 20 & 21)
PROPOSED SANITARY SEWER
FOR RETAINING WALL DETAILS SEE SHEET NO. 23
PROPOSED CONSTANT HEAD TANK
T.W. 54.50
PROPOSED SUPERINTENDENT'S OFFICE AND LUNCHROOM
TOWER
PROP. FUEL OIL STORAGE TANKS
H.L. & P. CO. 50' R.O.W.
POWER POLE
SHELL PIPE LINE CORP. 30' R.O.W.
MATCH LINE EAST 7+50

TYPE	DESCRIPTION
B	CITY OF HOUSTON STANDARD TYPE B INLET (Pg. 67 Of E-14)
4 C	CITY OF HOUSTON STANDARD TYPE C MANHOLE
C/B	CITY OF HOUSTON TYPE C MANHOLE WITH TYPE B GRATE

	INLET/M.H.	TYPE	COORDINATES		TOP OF GRATE/COVER	FLOWLINE
4	(H)	B	S1+55.00	E12+25.00	53.00	47.1
	(J)	C	S1+09.00	E12+50.00	53.60	42.42
4 2	(K)	C/B	S1+09.00	E14+40.00	52.50	41.85
4	(L)	C/B	S0+79.00	E12+25.00	53.00	42.77
4	(M)	C/B	S0+79.00	E10+75.00	53.50	43.15
4	(N)	B	S0+63.00	E10+10.00	53.50	48.50
4	(P)	C/B	S1+01.00	E10+10.00	53.50	43.87
4	(Q)	C/B	S1+64.50	E10+10.00	53.35	44.32
4	(R)	B	S2+40.66	E10+10.00	53.50	44.56
4 2	(S)	C	S2+12.00	E14+40.00	53.90	47.70

NOTE: SAN. SEW. MANHOLES ON PROP. SAN. SEW. NOT SHOWN ON ABOVE CHART.

INLET/M.H.	TYPE	COORDINATES		TOP OF GRATE/COVER	FLOW LINE
(T)	C	S1+09.00	E15+15.00	53.30	41.62
(U)	B	S2+12.00	E14+10.00	53.00	48.05

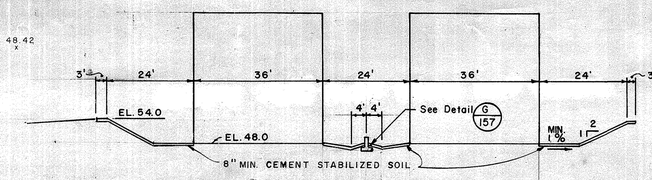

TYPICAL SECTION THRU FUEL OIL STORAGE TANKS

LEGEND

—51— EXISTING CONTOURS
—52— PROPOSED CONTOURS

NOTE:
1. USE NON-FUEL SOLUBLE JOINT SEALANT ON ALL STORM SEWERS THAT WILL CONVEY POSSIBLE FUEL OIL SPILLS.
2. SEE SHT. NO. 10 FOR TOP OF INLET GRATE AND TOP OF PAVEMENT ELEVATIONS.

REV. NO.	DATE	DESCRIPTION	DESIGN	CHECKED
4	8-77	PERMIT REVISIONS DELETED FENCE & EXTENDED RETAINING WALL - ADDED TYPE B INLET + 30' OF 18" R.C.P., EXTEND PAVING TO WALL ADD FUEL OIL DAY TANK	H.J.K.	K.R.L.
3	6-77	REVISED STORM SEWER	J.C.S.	K.R.L.
2	3-77	GENERAL REVISIONS	J.C.S.	S.R.S.
1	4-76	BLOWER PAD DELETED, MANHOLE POSITION MOVED, & ADDED NOTE	J.J.	D.R.Y.

CITY OF HOUSTON
DEPARTMENT OF PUBLIC WORKS

ALMEDA SIMS SLUDGE DISPOSAL PLANT – 1973

GRADING & DRAINAGE

RECOMMENDED FOR APPROVAL:
BINKLEY & HOLMES, INC., CONSULTING ENGINEERS

APPROVED:
CHIEF ENGINEER — ASST. CHIEF ENGINEER
ASST. DIRECTORS OF PUBLIC WORKS
DIRECTOR OF PUBLIC WORKS

DESIGNED BY: M. D. J., H.R.E.
DRAWN BY: G. DORMAN
CHECKED BY: M. D. J. H.R.E
SCALE: 1" = 30'
DATE: Dec., 1973
SHEET 8 OF 200 SHEETS
DRAWING NO. 18045

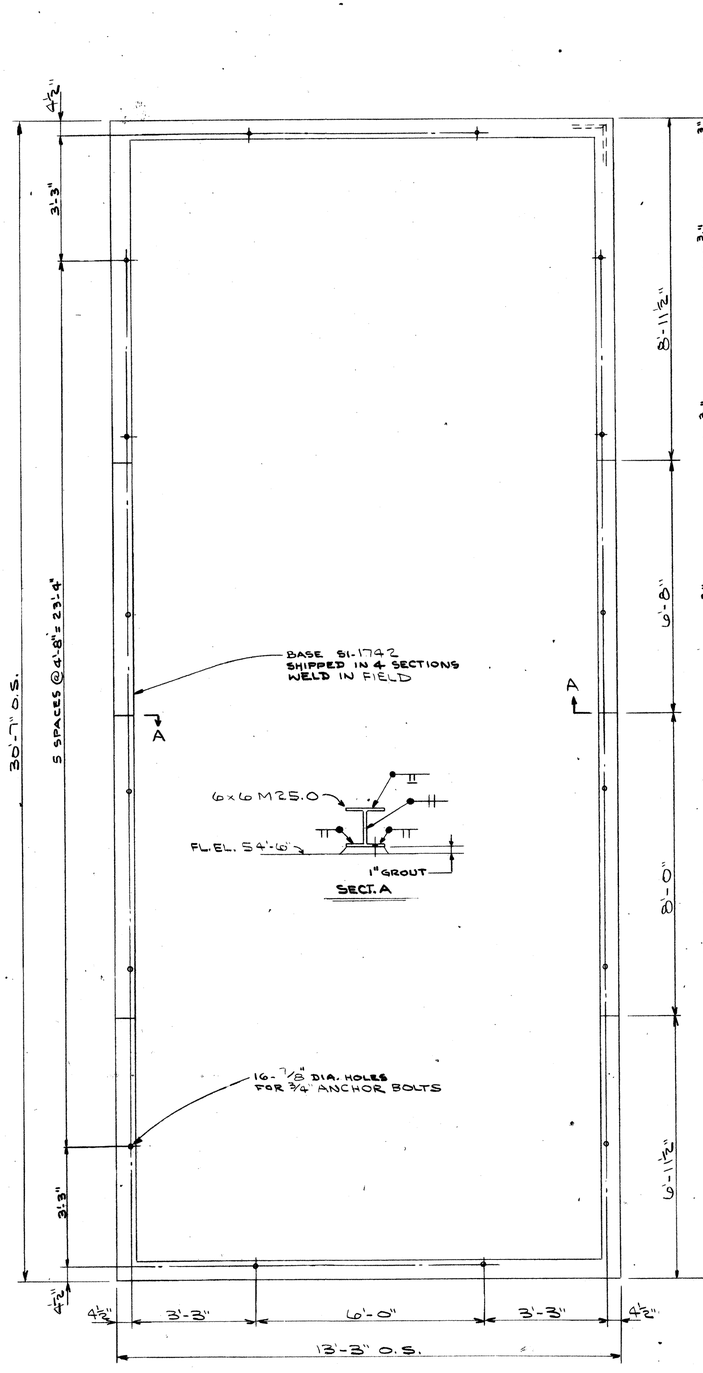

SECT. A

BASE PLAN

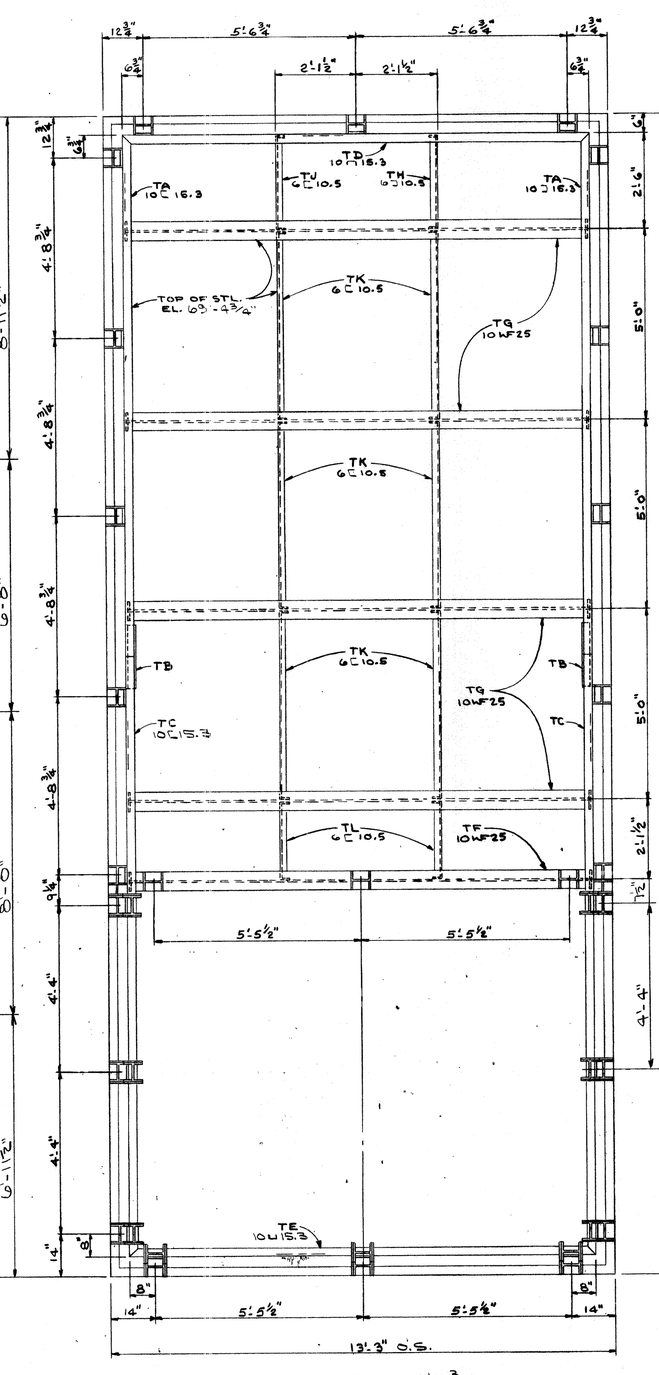

PLAN @ EL. 69'-4 3/4"

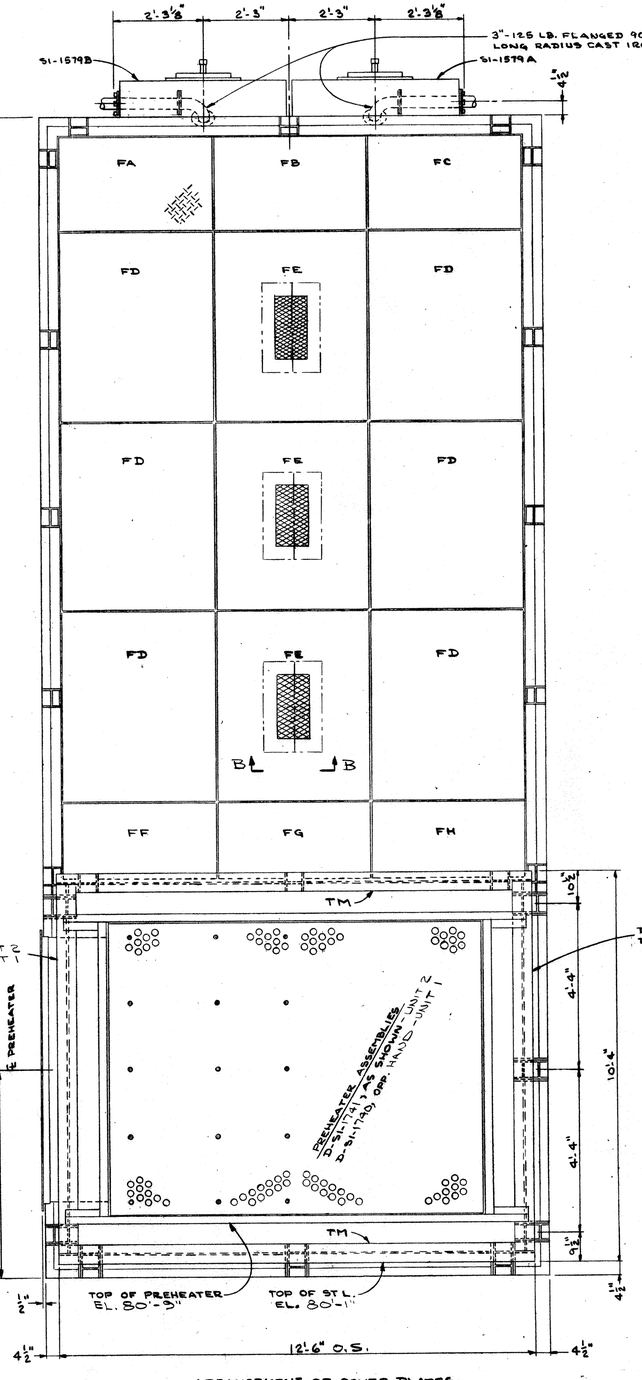

ARRANGEMENT OF COVER PLATES

PLAN AT TOP OF PREHEATER
UNIT 2 (AS SHOWN)
UNIT 1 (OPP. HANDS)

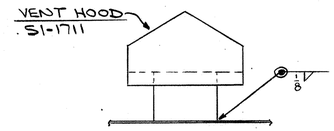

SECT. "B-B"

ASSEMBLY DRAWINGS

FOR UNITS 1 & 2
- SECTIONS-REFR. — D-SI-1737, D-SI-1738, D-SI-1739
- FIELD WELDING — D-SI-1700
- SOOT BLOWER PIPING — D-SI-1756
- WALL ANCHORS — E-SI-1693

FOR UNIT 1
- STRUCTURAL FRAMING — D-SI-1733, D-SI-1734
- DEODORIZING PREHEATER — D-SI-1740

FOR UNIT 2
- STRUCTURAL FRAMING — D-SI-1735, D-SI-1736
- DEODORIZING PREHEATER — D-SI-1741

BINKLEY & HOLMES, INC. Consulting Engineers
☑ NO EXCEPTIONS NOTED
☐ EXCEPTIONS NOTED
☐ REVISE AND RESUBMIT FOR CONSTRUCTION
☐ RETURNED FOR CORRECTION
Review does not relieve contractor of responsibility for conformity with contract requirements, correct details and fit of parts when assembled.
BINKLEY & HOLMES, INC. BY [illegible] DATE 6/7/77
CITY OF HOUSTON BY [illegible] DATE

W. W. RECORDS
MICROFILM
DATE 9/26/82

J-0 JOB NO. 3304-05

ASBUILT SHOP DRAWING

RAYMOND DIVISION, CHICAGO, ILL. CONTR. NO. 91377

FURNACE. STRUCTURAL FRAMING PLANS
UNITS 1 & 2
FOR CITY OF HOUSTON

SCALE 1/2"=1'-0" DRAWN BY L TRACED BY
DATE 5-16-77 CHECKED BY ALS APPROVED HAV 6-15-77

THIS DRAWING IS THE PROPERTY OF COMBUSTION ENGINEERING, INC. AND IS NOT TO BE REPRODUCED, OR USED TO FURNISH ANY INFORMATION FOR MAKING OF DRAWINGS OR APPARATUS EXCEPT WHERE PROVIDED FOR BY AGREEMENT WITH SAID COMPANY.

DRAWING NO. D-SI-1732-0

D-SI-1695

D- S1-1733

REVISION		
1	VB10, 15¼" WAS 13", S-1770 WAS 88' & 8D	4-7-78

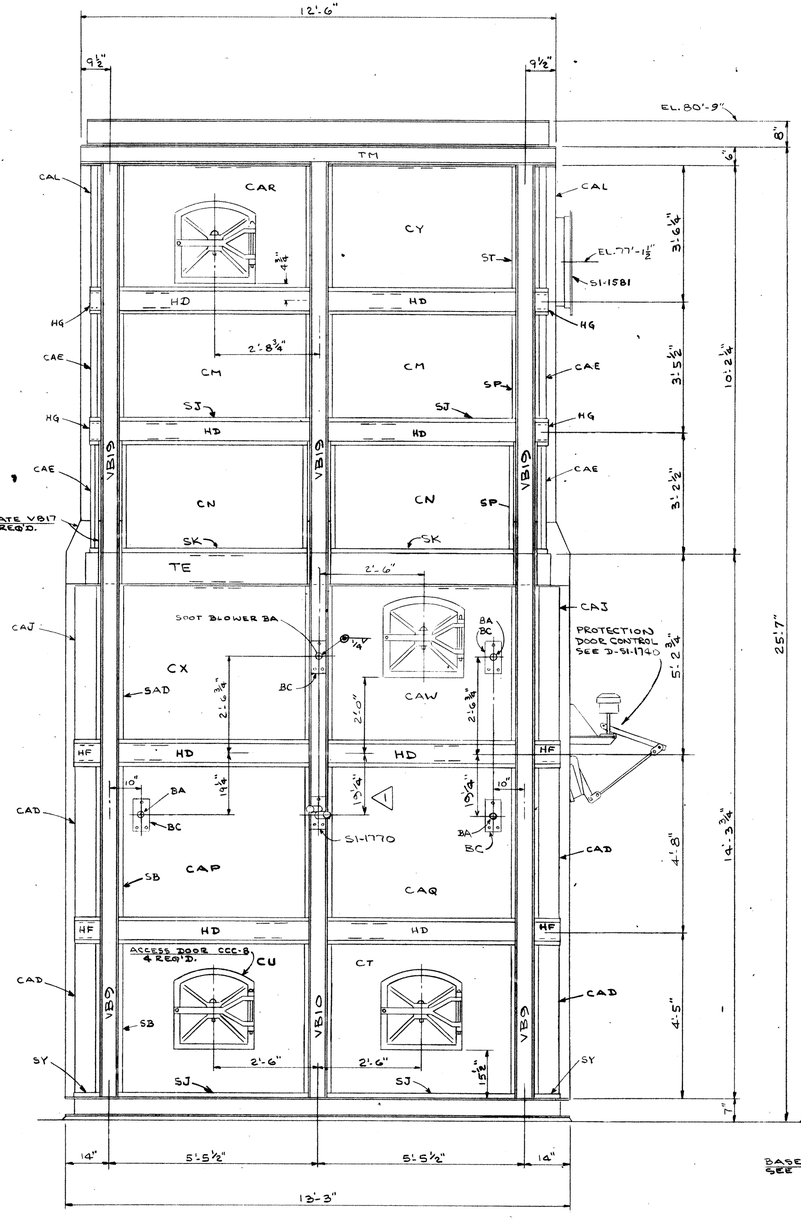

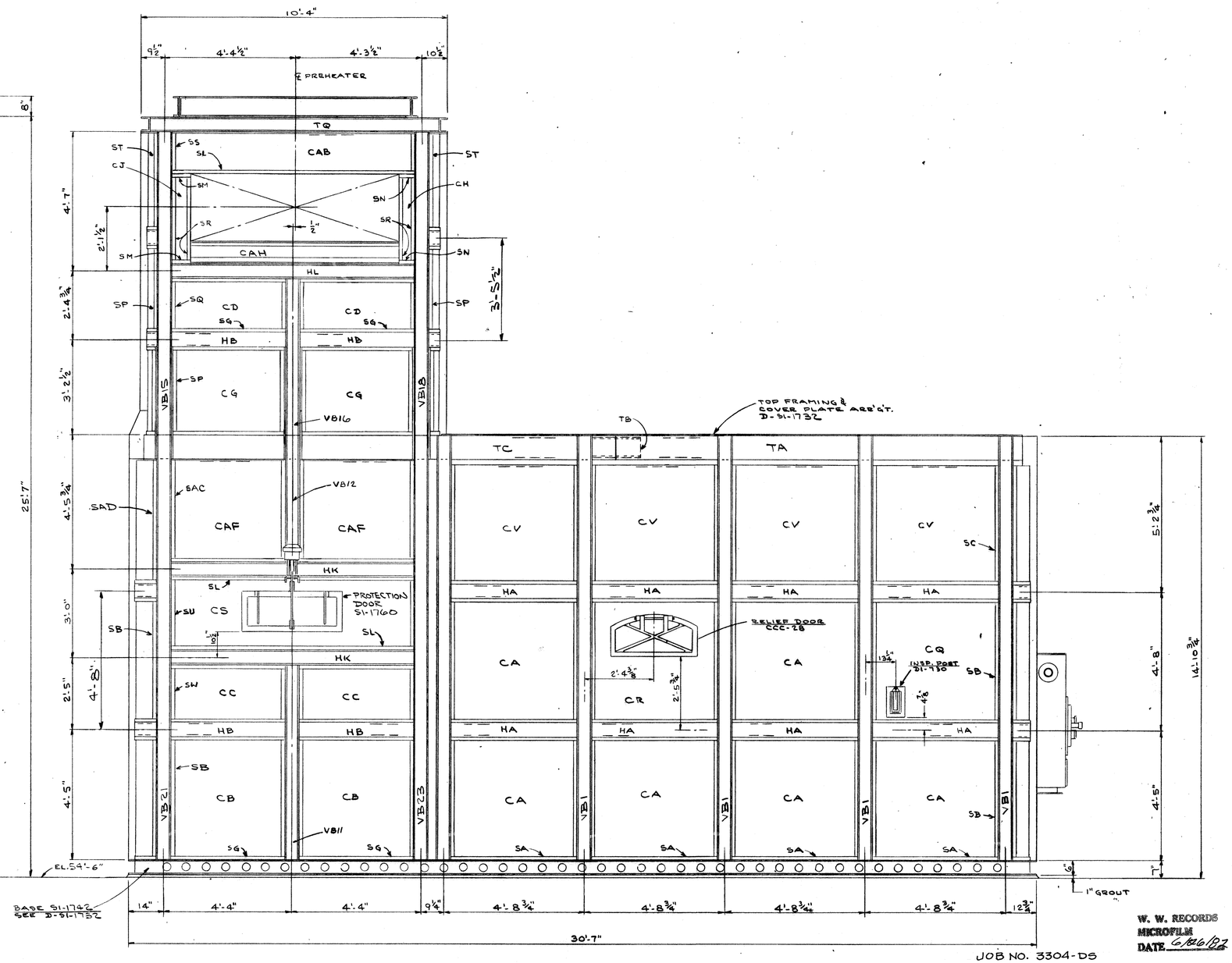

ASSEMBLY DRAWINGS

STRUCTURAL FRAMING	D-S1-1732, D-S1-1734
FIELD WELDING	D-S1-1700
DEODORIZING PREHEATER	D-S1-1740
SECTIONS - REFR.	D-S1-1737, D-S1-1738, D-S1-1739
SOOT BLOWER PIPING	D-S1-1756
WALL ANCHORS	E-S1-1693

KINKLEY & HOLMES, INC. Consulting Engineers
☐ NO EXCEPTIONS NOTED
☐ EXCEPTIONS NOTED
SUBMIT AND RESUBMIT FOR DISTRIBUTION
☐ RETURNED FOR CORRECTION
Review does not relieve contractor of responsibility for conformity with contract requirements, correct details and fit of parts when assembled.
KINKLEY & HOLMES, INC. BY [illegible] DATE 5/2/78
CITY OF HOUSTON BY [illegible] DATE

J-0

ASBUILT SHOP DRAWING
D-S1-1693

W. W. RECORDS
MICROFILM
DATE 6/26/82

JOB NO. 3304-DS
RAYMOND DIVISION, CHICAGO, ILL. CONTR. NO. 41277

FURNACE STRUCTURAL FRAMING - UNIT 1
FOR CITY OF HOUSTON

SCALE ½" = 1'-0" DATE 5-16-77
DRAWN BY L CHECKED BY ALS
TRACED BY APPROVED WHJ 6-15-77

THIS DRAWING IS THE PROPERTY OF COMBUSTION ENGINEERING, INC. AND IS NOT TO BE REPRODUCED, OR USED TO FURNISH ANY INFORMATION FOR MAKING OF DRAWINGS OR APPARATUS EXCEPT WHERE PROVIDED FOR BY AGREEMENT WITH SAID COMPANY.

DRAWING NO. D-S1-1733-1

DWG. NO. 18045 (SHT. NO. 9 OF)

DIETZGEN NO. 150-3 AGEPROOF

NOTE:
FOR PAVING DETAILS
SEE SHEET NO. 22

NOTE:
FOR GRADING AND DRAINAGE
SEE SHEET NO. 7&8

CITY BENCH MARK
5351
CITY SURVEY MARKER 0116
EL. 54.67

CONTRACT C-2 | CONTRACT C-1

TYPE 'F' INLET (UNDER SEPARATE CONTRACT) N 0+01.00 E 7+52.08
42" FORCE MAIN (UNDER SEPARATE CONTRACT)
24" STORM SEWER (UNDER SEPARATE CONTRACT)
67'-24" STORM SEWER (UNDER SEPARATE CONTRACT)
PROPOSED 8" GAS LINE
S 0+12.00
S 0+07.00
S 0+34.00
S 0+52.00
N 0+01.00 E 10+75.00 TYPE "F" INLET (UNDER SEPARATE CONTRACT)
PROP. 15"# x 72' C.M.P. ENCASEMENT
MATCH EXIST. PVMT.
RAILROAD SPUR TRACKS (UNDER SEPARATE CONTRACT)
MATCH EXISTING PAVING
20' ASPHALT ROADWAY (UNDER SEPARATE CONTRACT)
S 0+34.00
PROP. TANK CAR FUEL OIL UNLOADING STATION
S 0+61.00
S 0+52.00
30" STORM SEWER (UNDER SEPARATE CONTRACT)
EXISTING FENCE
BASE LINE = N 0+00
N 0+01.00
S 0+15.00
42" FORCE MAIN (UNDER SEPARATE CONTRACT)
P.T.
MATCH EXISTING PAVING
PROPOSED FUEL OIL UNLOADING FACILITIES
PROPOSED FERRIC CHLORIDE STORAGE TANKS
TRUCK RAMP
S 1+00.00
E 12+55.00
T.O.G. 53.50
T.O.G. 53.00
T.O.C. 53.60
T.O.G. 52.50
T.O.C. 53.30
PROPOSED OIL SEPARATOR
PROP. CONC. TRUCK RAMP SEE SHT. 156
S1+38 E15+05
S1+18 E15+97
MATCH EXIST. PAVING
PROP. JUNCTION BOX
S. 1+52
PROP. RETAINING WALL
PROP VALVE BOX
G 157
S1+85
E15+45
PROP W.A.S. PUMP PAD
S. 2+18
T.O.C. 53.90
T.O.G. 53.00
SWALE
PROPOSED FUEL OIL STORAGE TANKS
PROPOSED FILTRATE SEAL PIT
PROPOSED DRYER ROOM
E 10+25.58
PROPOSED BLOWER PAD
S 1+05.00
S 1+61.96
E 11+31.17
PROPOSED FILTER ROOM
PROP. CHEMICAL ROOM
PROP. CONSTANT HEAD TANK
S 2+20.58
PROPOSED LOADING AND STORAGE BUILDING (UNDER SEPARATE CONT.)
T.O.G. 53.35
T.O.G. 53.50
PROP. POWER CENTER NO. 1
FINISHED EARTH SURFACE
PROP. M.C.C. ROOM
PROP. SUPERINTENDENT'S OFFICE AND LUNCH ROOM
PROPOSED RETAINING WALL
T.W. 54.50
PROP. POWER CENTER NO. 2
PROPOSED SLUDGE PUMP PAD
PROPOSED SLUDGE THICKENER TANK S1+62.50
S1+38.00 E13+95.00
S1+65.00
PROP. CONC. PAVING
PROP. SCREENING FACILITY
E 13+40.00
E 14+00.00
E 14+11
E 14+34
S1+95
E13+95
MATCH LINE E 6+50
H. L. & P. CO. 50' R.O.W.
SHELL PIPE LINE CORP. 30' R.O.W.

NOTE: SEE SHEET 7 FOR PAVING AT GAS METERING STATION.

LEGEND
- PROPOSED ASPHALTIC CONCRETE PAVEMENT
- 50 EXISTING CONTOURS
- 50 PROPOSED CONTOURS
- (53.65) TOP OF PAVEMENT ELEVATION

REV.NO.	DATE	DESCRIPTION	DESIGN	CHECKED
4	10-78	PERMIT REVISION EXTENDED RETAINING WALL & EXTEND PAVING TO WALL	H.J.K.	K.R.L.
3	6-77	GENERAL REVISIONS	J.C.S.	R.L.
2	3-77	GENERAL REVISIONS	J.C.S.	S.R.S.
1	4-1-1976	BLOWER PAD DELETED	J.J.	D.R.Y.

CITY OF HOUSTON
DEPARTMENT OF PUBLIC WORKS

ALMEDA SIMS
SLUDGE DISPOSAL
PLANT - 1973

PROPOSED
PAVING

RECOMMENDED FOR APPROVAL:
BINKLEY & HOLMES, INC., CONSULTING ENGINEERS

APPROVED:
CHIEF ENGINEER
ASST. CHIEF ENGINEER
ASST. DIRECTORS OF PUBLIC WORKS
DIRECTOR OF PUBLIC WORKS

DESIGNED BY: M. P. J., H.R.E.
DRAWN BY: G. DORMAN
CHECKED BY: M. P. J., H.R.E.
SCALE: 1" = 30'
DATE: Dec., 1973
SHEET 10 OF 200 SHEETS
DRAWING NO. 18045

H. R. EICHELBERGER 34865 REGISTERED PROFESSIONAL ENGINEER
R. A. BINKLEY 2422 REGISTERED PROFESSIONAL ENGINEER
STATE OF TEXAS

7

D- SI-1734 | REVISION

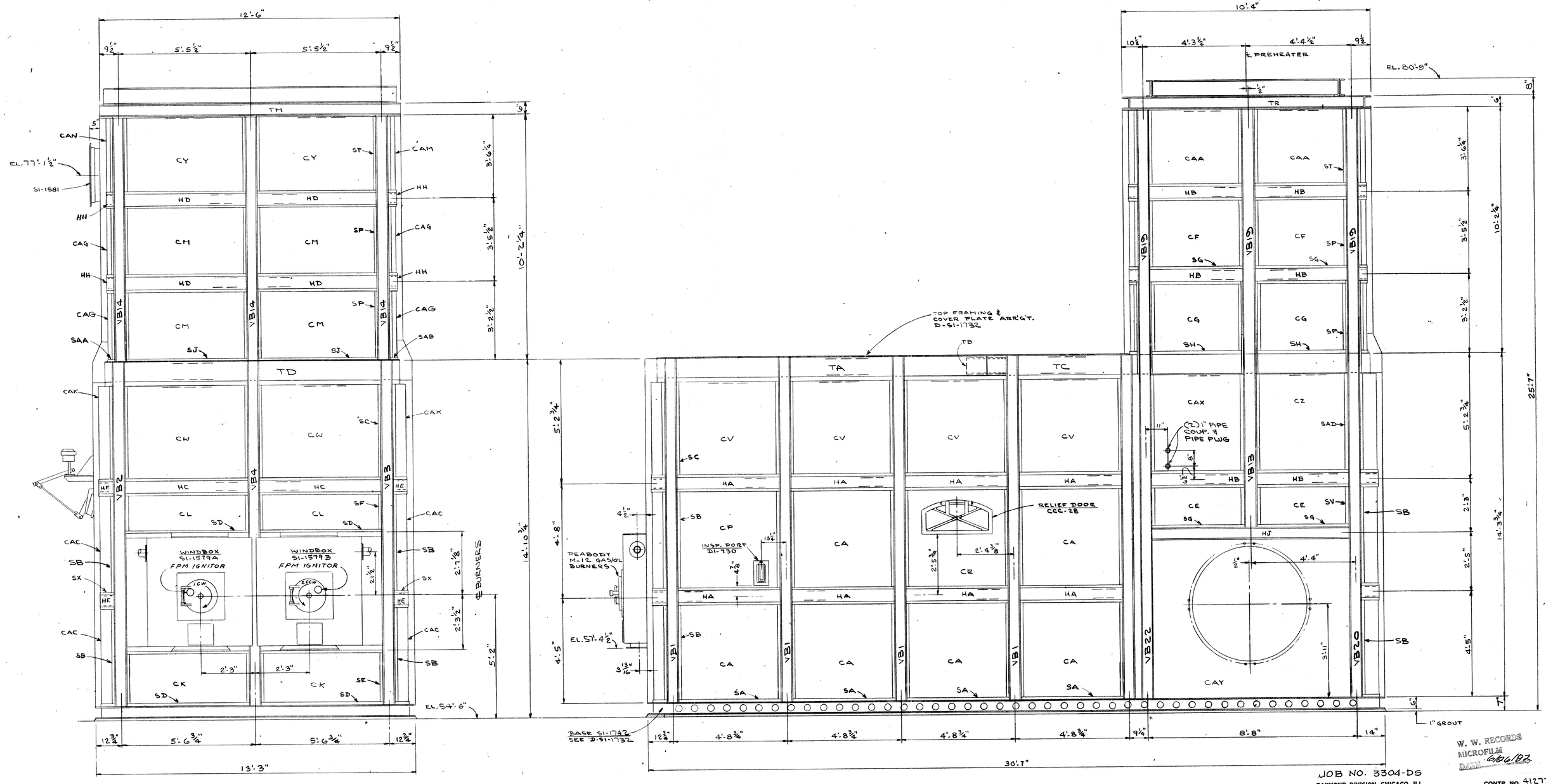

ASSEMBLY DRAWINGS

STRUCTURAL FRAMING	D-SI-1732, D-SI-1733
FIELD WELDING	D-SI-1700
DEODORIZING PREHEATER	D-SI-1740
SECTIONS-REFR.	D-SI-1737, D-SI-1738, D-SI-1739
SOOT BLOWER PIPING	D-SI-1756
WALL ANCHORS	E-SI-1699

J-O

BINKLEY & HOLMES, INC. Consulting Engineers
☑ NO EXCEPTIONS NOTED
☐ EXCEPTIONS NOTED
SUBMIT NEW DRAWING FOR INSPECTION
☐ RETURNED FOR CORRECTION
Review does not relieve contractor of responsibility for conformity with contract requirements, correct details and fit of parts when assembled.
BINKLEY & HOLMES, INC. BY _____ DATE 6/2/78
CITY OF HOUSTON BY _____ DATE

ASBUILT SHOP DRAWING D-SI-1694

JOB NO. 3304-DS
RAYMOND DIVISION, CHICAGO, ILL. CONTR. NO. 41277

FURNACE STRUCTURAL FRAMING - UNIT 1
FOR CITY OF HOUSTON

SCALE ½"=12" DRAWN BY L TRACED BY
DATE 5-16-77 CHECKED BY A.L.S APPROVED H.W. 6-15-77

THIS DRAWING IS THE PROPERTY OF COMBUSTION ENGINEERING, INC. - AND IS NOT TO BE REPRODUCED, OR USED TO FURNISH ANY INFORMATION FOR MAKING OF DRAWINGS OR APPARATUS EXCEPT WHERE PROVIDED FOR BY AGREEMENT WITH SAID COMPANY.

DRAWING NO. D-SI-1734-O

DWG. NO. 18045 (SHT. NO. 10 OF)

W. W. RECORDS MICROFILM DATE 6/26/82

DIETZGEN NO. 330-2 AGEPROOF

NOTE:
ALL PIPES UNDER PRESSURE SHALL HAVE THRUST BLOCKS IN ACCORDANCE WITH APPLICABLE CITY OF HOUSTON SPECIFICATIONS

CITY BENCH MARK
5351
CITY SURVEY MARKER 0116
EL. 54.67

EXISTING FENCE
PROPOSED 7' CHAIN LINK FENCE
EXISTING FENCE
℄ ALMEDA ROAD
R.R. SPIKE 0+00 ℄ R.R. TRACK
69° 50' 46"
N0+15.00
E1+100.00
PROP. NATURAL GAS METERING STATION (BY OTHERS)
℄ ELEV. 47.50
N0+08.50
8" CAP
8"-90° ELBOW
8"-90° ELBOW
PROP. 7' CHAIN LINK FENCE (SEE FENCE PLAN)
PROPOSED ASPHALTIC CONCRETE DRIVE
E1+100.00
℄ ELEV. 47.50
SEE CROSSING DETAIL THIS SHEET
S0+02.00
E2+95.00
S0+12.00
TYPE 'F' INLET (UNDER SEPARATE CONTRACT)
21" STORM SEWER (UNDER SEPARATE CONTRACT)
BASE LINE = N0+00
TYPE 'F' INLET (UNDER SEPARATE CONTRACT)
24" STORM SEWER (UNDER SEPARATE CONTRACT)
N0+01.00
E7+52.08
TYPE 'F' INLET (Under Separate Contract)
RAILROAD SPUR TRACK (UNDER SEPARATE CONTRACT)
S0+07.00
PROPOSED 8" GAS LINE
S0+12.00
℄ 20' ASPHALT ROADWAY (UNDER SEPARATE CONTRACT)
S0+34.00
18" STORM SEWER (UNDER SEPARATE CONTRACT)
67"-24" STORM SEWER (UNDER SEPARATE CONTRACT)
S0+34.00
18" STORM SEWER (UNDER SEPARATE CONTRACT)
S0+65.00
8" WATER LINE (UNDER SEPARATE CONTRACT)
S0+58.00
15" ϕ x 45' C.M.P. ENCASEMENT (UNDER SEPARATE CONTRACT)
M.P. R.R. (I&GN)
E2+21.00
42" FORCE MAIN (UNDER SEPARATE CONTRACT)
ASPHALT PAVEMENT (BY OTHERS)
S1+30.00
POWER POLE & GUY WIRE
LIMITS OF GRADING (UNDER SEPARATE CONTRACT)
JOB NO. 3292-1
EXISTING 10' SHELL DRIVE
(BY OTHERS) PROP. 84" SAN. SEWER
LIFT STATION (UNDER SEPARATE CONTRACT)
0+00 ℄ PROP. MH. BY OTHERS= S-1170= E-0185
PROP. SAN. SEW.
PROPOSED 7' CHAIN LINK FENCE
POWER POLE
E4+25
PROPOSED SURFACING
4177 ℄ PROP. MH.= E-4161
FOR PROFILE (SEE SHEETS 20 & 21)
1+01 ℄ PROP. MH. S2171= E-0185
7.5
PROPOSED SANITARY SEWER
EXISTING 10' SHELL DRIVE
7.5
PROPOSED SANITARY SEWER
PROPOSED 7' CHAIN LINK FENCE
PROPOSED RETAINING WALL
MATCH LINE E 8+00
H.L. & P. CO. 50' R.O.W.
SHELL PIPE LINE CORP. 30' R.O.W.

W1+00 0+00 E1+00 E2+00 E3+00 E4+00 E5+00 E6+00 E7+00 E8+00
N1+00 0+00 S1+00 S2+00 S3+00 S4+00 S5+00

		PERMIT REVISIONS		
4	10-78	RELOCATE STORAGE AREA DELETED CONTOUR LINES AT END RETAINING WALL	H.J.K.	K.L.
3	10-77	ADDED STORAGE AREA & FENCING	K.L.	K.L.
2	6-77	GENERAL REVISIONS	J.C.S.	K.R.L.
1	3-77	GRADING, RAILROAD SPUR, AND 8" WATER LINE REVISED	J.J.	S.R.S.
REV. NO.	DATE	DESCRIPTION	DESIGN	CHECKED

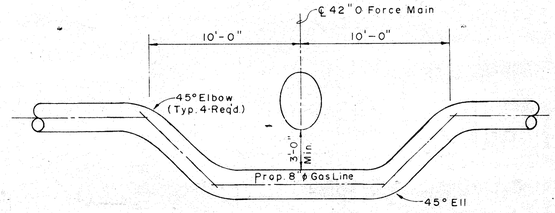

8"Ø GAS LINE CROSSING DETAIL
N.T.S.

CITY OF HOUSTON
DEPARTMENT OF PUBLIC WORKS

ALMEDA SIMS
SLUDGE DISPOSAL
PLANT - 1973

YARD PIPING PLAN

RECOMMENDED FOR APPROVAL:
Paul R. Holmes
BINKLEY & HOLMES, INC., CONSULTING ENGINEERS

APPROVED:
Walter Williams
CHIEF ENGINEER — ASST. CHIEF ENGINEER
ASST. DIRECTORS OF PUBLIC WORKS
E B Boyle
DIRECTOR OF PUBLIC WORKS

DESIGNED BY: M.D.J.
DRAWN BY: G. DORMAN
CHECKED BY: M.D.J.
SCALE: 1" = 30'
DATE: Dec., 1973
SHEET 11 OF 200 SHEETS
DRAWING NO. 18045

D-SI-1735

REVISION	
1	VB10 : 15¾" WAS 18 SI-1770 WAS "E.B." & "SD" # 4-7-78

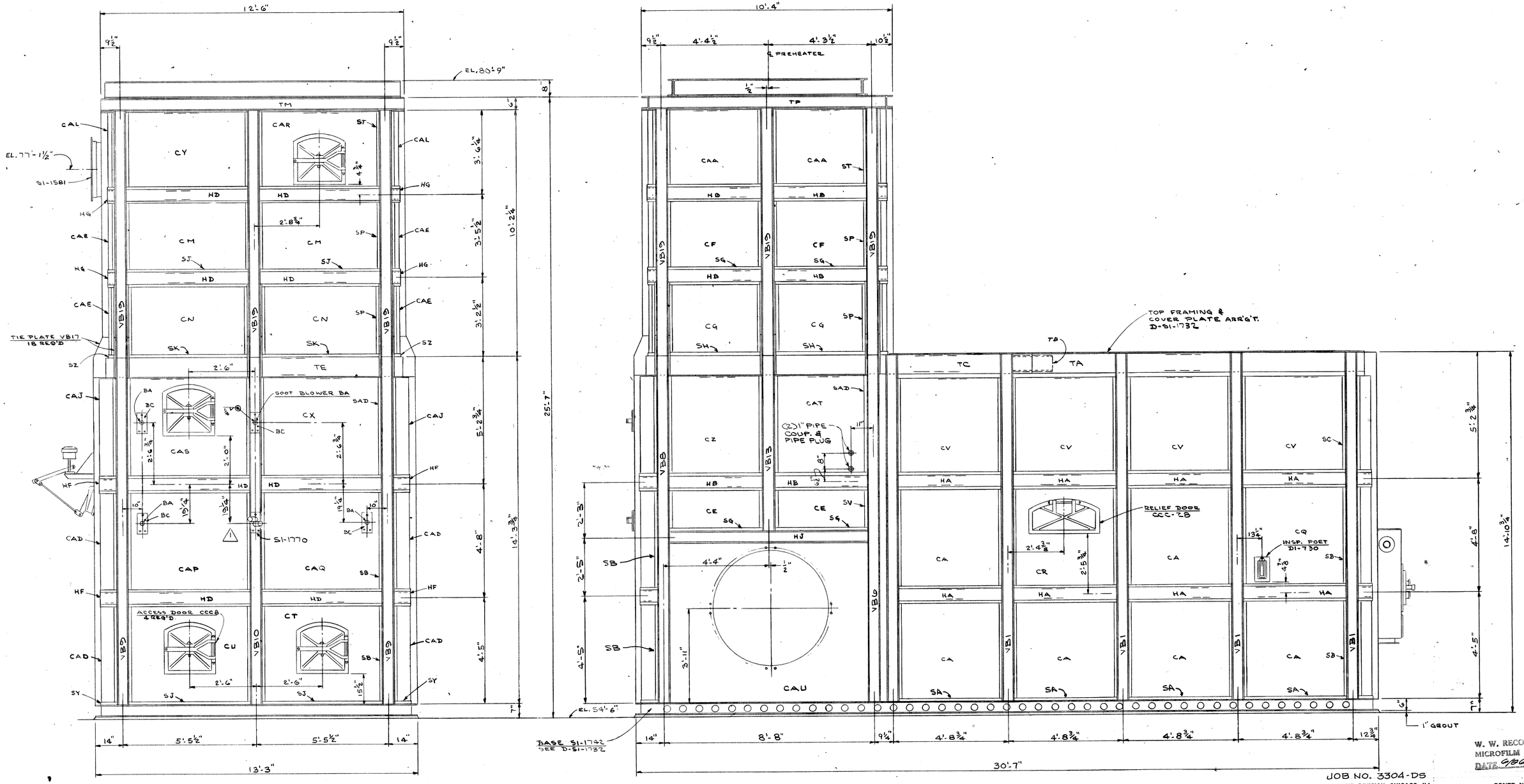

W. W. RECORDS
MICROFILM
DATE 9/26/82

JOB NO. 3304-DS
RAYMOND DIVISION, CHICAGO, ILL. CONTR. NO. 41277

T-0

ASSEMBLY DRAWINGS

STRUCTURAL FRAMING	D-SI-1732, D-SI-1736
FIELD WELDING	D-SI-1700
DEODORIZING PREHEATER	D-SI-1741
SECTIONS-REFR.	D-SI-1737, D-SI-1738, D-SI-1739
SOOT BLOWER PIPING	D-SI-1756
WALL ANCHORS	E-SI-1699

BINKLEY & HOLMES, INC. Consulting Engineers
☒ NO EXCEPTIONS NOTED
☐ EXCEPTIONS NOTED
☐ REVISED FOR CORRECTION
Review does not relieve contractor of responsibility for conformity with contract requirements, correct details and fit of parts when assembled.
BINKLEY & HOLMES, INC. BY [signature] DATE 5/4/78
CITY OF HOUSTON BY [signature] DATE

ASBUILT SHOP DRAWING

D-SI-1691

FURNACE STRUCTURAL FRAMING-UNIT 2
FOR CITY OF HOUSTON

SCALE ½"=1'-0"	DATE 5-16-77
DRAWN BY L	CHECKED BY ALS
TRACED BY	APPROVED HHJ 6-15-77

THIS DRAWING IS THE PROPERTY OF COMBUSTION ENGINEERING, INC. AND IS NOT TO BE REPRODUCED, OR USED TO FURNISH ANY INFORMATION FOR MAKING OF DRAWINGS OR APPARATUS EXCEPT WHERE PROVIDED FOR BY AGREEMENT WITH SAID COMPANY.

DRAWING NO. D-SI-1735-1

DWG. NO. 18045 (SHT. NO. 11 OF)

DIETZGEN NO. 136-3 AGEPROOF

CITY BENCH MARK
5351
CITY SURVEY MARKER 0116
EL. 54.67

NOTE:
ALL PIPES UNDER PRESSURE SHALL HAVE THRUST BLOCKS IN ACCORDANCE WITH APPLICABLE CITY OF HOUSTON SPECIFICATIONS

NOTE:
ALL PIPE LINES SHALL HAVE A MINIMUM 4' COVER UNLESS NOTED OTHERWISE

NOTE:
REMOVE PLUGS & CONNECT TO LINES UNDER SEPARATE CONTRACT

N

E8+00 E9+00 E10+00 E11+00 E12+00 E13+00 E14+00 E15+00 E16+00 E17+00

N1+00 0+00 S1+00 S2+00 S3+00

EAST 8+00

MATCH LINE

PROPOSED LOADING AND STORAGE BUILDING

PROPOSED DRYER ROOM

PROPOSED FILTER ROOM

PROP. FILTRATE SEAL PIT

PROP. CHEMICAL ROOM

PROP. M.C.C. ROOM

PROPOSED SUPERINTENDENT'S OFFICE AND LUNCH ROOM

PROPOSED CONSTANT HEAD TANK SEE SHEET NO. 66

PROPOSED FERRIC CHLORIDE STORAGE TANKS

TRUCK RAMP

PROPOSED SLUDGE THICKENER TANK

PROPOSED SLUDGE PUMP PAD

PROPOSED BOILER BUILDING

COMPRESSOR BUILDING (UNDER SEPARATE CONTRACT)

PROP. W.A.S. PUMP PAD

PROP. SCREENING FACILITY

PROP. FUEL OIL UNLOADING FACILITIES

PROPOSED FUEL OIL STORAGE TANKS

PROP. RETAINING WALL

PROP. POWER CENTER No. 1

PROP. POWER CENTER No. 2

PROPOSED SANITARY SEWER

PROPOSED 8" GAS LINE

24" STORM SEWER (UNDER SEPARATE CONTRACT)

30" STORM SEWER (UNDER SEPARATE CONTRACT)

TYPE "F" INLET (UNDER SEPARATE CONTRACT)

TYPE 'C' M.H. W/'F' INLET TOP (UNDER SEPARATE CONTRACT)

42" FORCE MAIN (UNDER SEPARATE CONTRACT)

36" AIR LINE (UNDER SEPARATE CONTRACT)

2" WATER LINE (UNDER SEPARATE CONTRACT)

6" SCUM LINE (UNDER SEPARATE CONTRACT)

16" SLUDGE LINE (UNDER SEPARATE CONTRACT)

30" STORM SEWER (UNDER SEPARATE CONTRACT)

AERATION TANK (UNDER SEPARATE CONTRACT)

20' SHELL ROADWAY (UNDER SEPARATE CONTRACT)

20' ASPHALT ROADWAY (UNDER SEPARATE CONTRACT)

ASPH. ROADWAY (UNDER SEPARATE CONTRACT)

RAILROAD SPUR TRACKS (UNDER SEPARATE CONTRACT)

8" WATER LINE (UNDER SEPARATE CONTRACT)

4" WATER LINE (UNDER SEPARATE CONTRACT)

42" STORM SEWER (UNDER SEPARATE CONTRACT)

48" STORM SEWER (UNDER SEPARATE CONTRACT)

TYPE 'C' M.H. (UNDER SEPARATE CONTRACT)

H.L. & P CO. 50' R.O.W.

SHELL PIPE LINE CORP. 30' R.O.W.

BASE LINE N 0+00

N 0+01.00 E 10+75.00

S 0+07.00 ELEV. B.O.P. 47.00

S 0+12.00

S 0+34.00

S 0+61.00

S 0+58.00

S 0+08.00

S 0+15.00

S 0+23.00

S 0+08.00, E 14+37.00 6"-90° BEND ℄ EL. 39.50

S 0+21.00, E 14+72.00 16"-45° BEND ℄ EL. 48.02

S 0+27.00, E 14+78.00 16"-45° BEND ℄ EL. 48.06

S 0+27.00, E 16+14.93 15"-45° BEND ℄ EL. 48.06

S 0+21.00, E 16+12.44 16"-45° BEND ℄ EL. 48.25

S 0+21.00, E 16+12.42 S 0+10.45 E 16+76.46

S 0+45.75 E 13+93.00

S 0+84.50

S 0+92.00 E 9+95.00

S 1+02.00 E 11+36.84

S 1+05.00, E 11+53.00

S 1+00.00, E 11+48.00

S 1+05.00, E 13+79.00

S 1+14.00

S 1+05.00

S 1+61.96

S 1+64.50

S 1+88.50

S 1+31.33 E 11+45.00 EL. 45.00

S 1+54.08 E 11+42.0

S 1+89.00, E 12+60.00 F.L. EL. 46.68

S 1+90.00 E 12+88.50

S 1+65.00

S 1+38.0 E 13+88.0

S 1+38.0 E 14+12.00

S 1+62.00 E 13+93.00

S 1+93.00 E 13+93.00

S 1+83.00 ℄ EL. 39.50

S 1+91.50 ℄ EL. 48.00

S 1+08.58 E 15+44.68

S 1+02.00, E 14+03.00 16"x16"x12" WYE

S 2+19.00, E 11+75.00

S 2+15.00, E 11+73.00

S 2+12.36

S 2+23.00 ℄ EL. 46.00

S 2+40.58

S 2+39.58 E 11+48.42

S 2+42.08 E 11+51.92

S 2+25.00 E 12+87.00

S 2+21.50 E 13+18.00

S 2+25.00 E 14+35.00

S 2+21.50, E 13+63.00

E 10+25.58 ℄

E 10+20.00

E 10+05.00

E 11+31.17

E 11+16.00 ℄ ELEV 48.50

E 12+65.00

E 13+40.00

E 15+62.00

E 16+62.00

12"ϕ x 30' C.M.P. ENCASEMENTS (UNDER SEPARATE CONTRACT)

15"ϕ x 25' C.M.P ENCASEMENTS (UNDER SEPARATE CONTRACT)

15"ϕ x 72' C.M.P ENCASEMENT (UNDER SEPARATE CONTRACT)

15"ϕ x 30' C.M.P. ENCASEMENT (UNDER SEPARATE CONTRACT)

8"-90° ELBOW

PROP. 8" P.V.C. DRAIN LINE

PROP. 18" STORM SEWER

PROP. 15" STORM SEWERS

PROP. 6" C.I. WATER LINE

PROP. 10" D.I.M.J. DRAIN LINE

PROP. 8" D.I.M.J. SLUDGE DISCHARGE ℄ EL. 48.50

PROP. 6" C.I.M.J. SCUM LINE

PROP. 8" SLUDGE LINE

PROP. 2" HIGH DENSITY POLYPROPYLENE FERRIC CHLORIDE LINE IN 4" V.C.P.

PROP. AIR LIFT BLOWER PAD

PROP. 12" CONC. PRESS PIPE

PROP. 16" CONC. PRESS PIPE FILTRATE EFFLUENT LINE

PROP. 2" SCH. 80 STL. FUEL OIL FEED LINE 30" MIN. COVER

PROP. 2" SCH. 80 STL. FUEL OIL UNLOADING LINE 30" MIN. COVER

PROP. R.R. TANK CAR UNLOADING STATION SEE DETAIL (D/157)

PROP. 2" WATER LINE ℄ EL. 45.41

PROP. 6" WATER LINE EL. 45.41

PROP. 1" WATER LINE ℄ EL. 50.0

PROP. 1" VALVE & BOX

PROP. 3/4" HOSE BIB w/BACKFLOW PREVENTER

PROP. 2" STORM SEWER

PROP. 15" STORM SEWER 5'-0" x 5'-0" O.D. VALVE BOX

PROP. 6" VALVE & BOX PROP. F.H.

PROP. 2"x2"x3/4" TAPPED TEE

PROP. 2"x1" REDUCER

PROP. 3/4" H.B. w/BACKFLOW PREVENTER

PROP. 3" GALV. STL. PLANT WATER-MIN. 3' COVER

PROP. 1" WATER LINE

PROP. F.H.

PROP. 6" VALVE & BOX

PROP. 4" D.I. DRAIN LINE

PROP. 10" D.I.M.J. DRAIN LINE

PROP. 8" D.I.M.J. DRAIN LINE

PROP. 6" C.I.M.J. DRAIN LINE

PROP. 6" VALVE & BOX (UNDER SEPARATE CONTRACT)

PROP. 8" WATER LINE (UNDER SEPARATE CONTRACT) PROP. FUEL OIL SUPPLY TANK-SEE DETAIL BELOW

PROP. 4" SCH. 80 STL. FUEL OIL UNLOADING LINE 30" MIN. COVER

PROP. 16" CONC. PRESS PIPE

2-45° BENDS

OIL SEPARATOR

8"ϕ R.C.P.

6"ϕ R.C.P.

4" PVC Drain

10"ϕ Conc. Storm Sewer

22"ϕ Manway W/Cover

4" Vent Nozzle

4" Liquid Level Nozzle

4" Fuel Feed Nozzle

4" Fuel Return Nozzle

4" Fuel Supply Nozzle

Fuel Supply Tank. See Detail (J/160) (Approx. 8'0 x 37' Lg. 12000 Gal.)

2" Fuel Line From Ground Storage Tanks (Min. 30" Cover)

Dryer Building

NOTES:
1. All Nozzles Shall Be Flanged And Gusseted.
2. Manway To Have 2' Extension Tube.

FUEL OIL SUPPLY TANK DETAIL (4)

Place One Sign At Each Non-Potable Hose Bib

NON-POTABLE WATER DO NOT DRINK

Dixon Air king

Globe Valve

Back Flow Preventer To Be Installed On All Hose Bibs Supplied By Potable(City) Water, Not Regd On Non-Potable (Plant) Water S

Stop & Drain Valve

6"ϕ Treated Pole

TYPICAL HOSE BIB DETAIL (4)

5	10-79	CONSTRUCTION REVISIONS REROUTE FERRIC SUPPLY LINE	W.G.W.	H.J.K.
4	10-78	PERMIT REVISIONS ADD HOSE BIB DETAIL ADD FUEL OIL SUPPLY TANK REV. RETAINING WALL	H.J.K.	K.R.L.
3	6-77	REVISED STORM SEWER	J.C.S.	K.R.L.
2	3-77	GENERAL REVISIONS	J.C.S.	S.R.S.
1	4-76	REVISED 8" AIR LINE & SAN. SWR. M.H. DELETED BLOWER PAD	J.J.	D.R.Y.
REV. NO.	DATE	DESCRIPTION	DESIGN	CHECKED

CITY OF HOUSTON
DEPARTMENT OF PUBLIC WORKS

ALMEDA SIMS SLUDGE DISPOSAL PLANT - 1973

YARD PIPING PLAN

RECOMMENDED FOR APPROVAL:
BINKLEY & HOLMES, INC., CONSULTING ENGINEERS

APPROVED:
CHIEF ENGINEER — ASST. CHIEF ENGINEER

ASST. DIRECTORS OF PUBLIC WORKS
DIRECTOR OF PUBLIC WORKS

DESIGNED BY: M.B.J., HRE
DRAWN BY: I. GONZALEZ
CHECKED BY: M. B. J., HRE
SCALE: 1" = 30'
DATE: Dec., 1973
SHEET 12 OF 200 SHEETS
DRAWING NO. 18045

JAMES A. BINKLEY — REGISTERED PROFESSIONAL ENGINEER — STATE OF TEXAS
PAUL R. HOLMES — REGISTERED PROFESSIONAL ENGINEER — STATE OF TEXAS

9

D-S1-1736 | REVISION

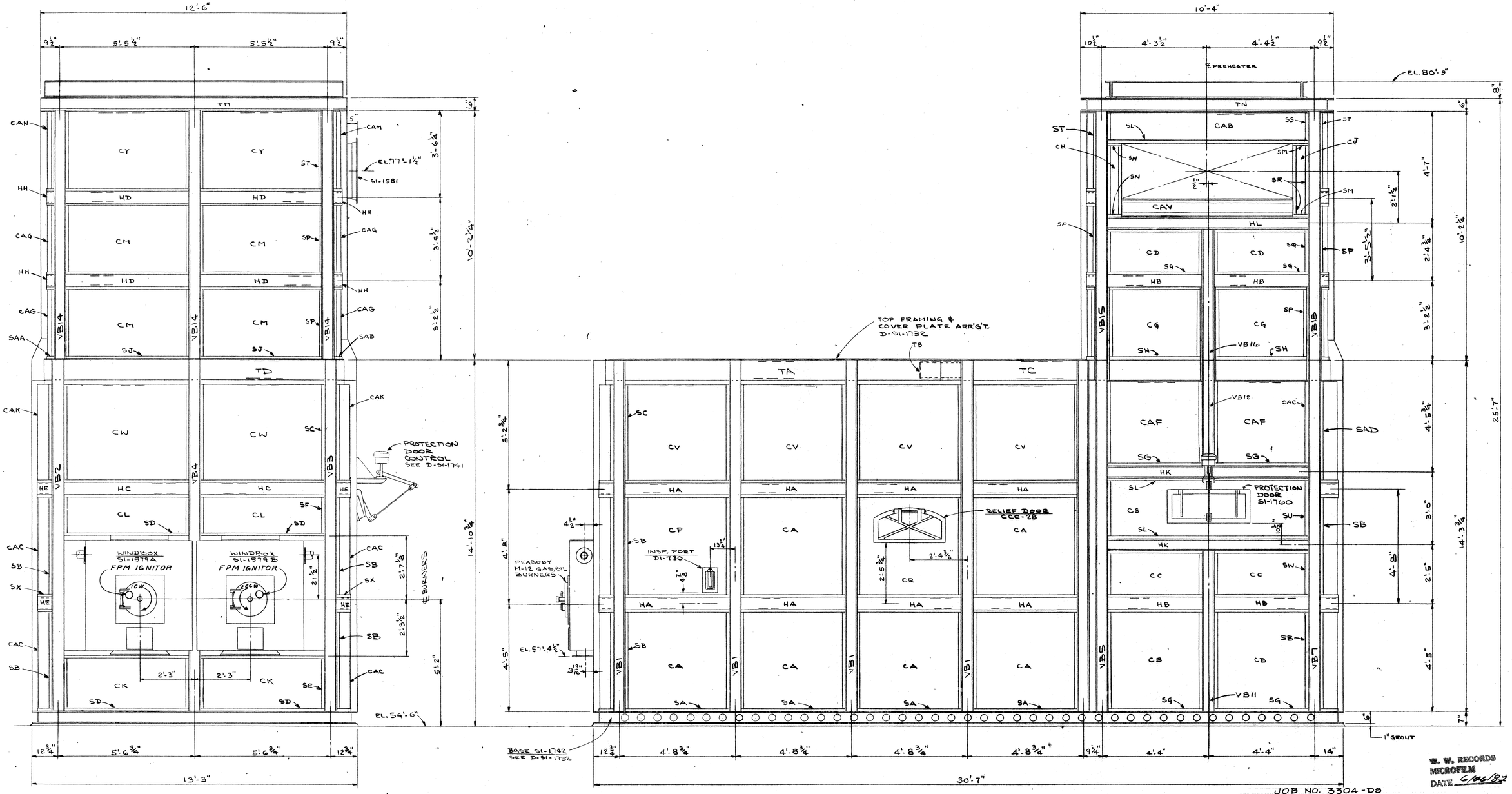

ASSEMBLY DRAWINGS

STRUCTURAL FRAMING	D-S1-1732, D-S1-1735
FIELD WELDING	D-S1-1700
DEODORIZING PREHEATER	D-S1-1741
SECTIONS - REFR.	D-S1-1737, D-S1-1738, D-S1-1739
SOOT BLOWER PIPING	D-S1-1756
WALL ANCHORS	E-S1-1699

J-0

SIMLEY & HOLMES, INC. Consulting Engineers
☐ NO EXCEPTIONS NOTED
☐ EXCEPTIONS NOTED
WORK MAY PROCEED FOR FABRICATION.
☐ RETURNED FOR CORRECTION
Review does not relieve contractor of responsibility for conformity with contract requirements, correct details and fit of parts when assembled.
SIMLEY & HOLMES, INC. BY [signature] DATE 5/2/78
CITY OF HOUSTON BY [signature] DATE

ASBUILT SHOP DRAWING
D-S1-1692

W. W. RECORDS MICROFILM DATE 6/26/87

JOB NO. 3304-DS
RAYMOND DIVISION, CHICAGO, ILL.
CONTR. NO. 41277

FURNACE STRUCTURAL FRAMING - UNIT 2
FOR CITY OF HOUSTON

SCALE ½"=1'-0" | DATE 5-16-77
DRAWN BY L | CHECKED BY ALS
TRACED BY | APPROVED [illegible] 6-15-77

THIS DRAWING IS THE PROPERTY OF COMBUSTION ENGINEERING, INC. AND IS NOT TO BE REPRODUCED, OR USED TO FURNISH ANY INFORMATION FOR MAKING OF DRAWINGS OR APPARATUS EXCEPT WHERE PROVIDED FOR BY AGREEMENT WITH SAID COMPANY.

DRAWING NO. D-S1-1736-0

DWG. NO. 18045 (SHT. NO. 12 OF [illegible])

DIETZGEN NO. 135-S AGEPROOF

D-S1-1737	REVISION	1	CLIP DES WERE (?) L 4-7-78

ASSEMBLY DRAWINGS

FOR UNITS 1&2
- SECTIONS — (C&D) D-S1-1738; (E&F) D-S1-1739; (G) D-S1-1741; (H) D-S1-1740
- FIELD WELDING — D-S1-1700
- SOOT BLOWER PIPING — D-S1-1736
- WALL ANCHOR ARRANGEMENT — E-S1-1699

FOR UNIT 1
- STRUCTURAL FRAMING — D-S1-1733; D-S1-1734
- DEODORIZING PREHEATER — D-S1-1740

FOR UNIT 2
- STRUCTURAL FRAMING — D-S1-1735; D-S1-1736
- DEODORIZING PREHEATER — D-S1-1741

INSULATING FIREBRICK, LAID DRY IN DOOR OPENINGS, REMOVE FOR PREHEATER INSPECTION.

G (UNIT 2) / H (UNIT 1)

EL. 80'-9" STIC-TITE

1½" SPACE

BONDED ARCH
6 - #3 WEDGE 9 x 4½ x (3-2)
15 - #3 WEDGE 9 x 4½ x (3-2½)
15 - #2 WEDGE 9 x 6¾ x (3-2½)
6 - SKEWBACK 60-9

CUT WEDGE BRICK

7'-9¼" (BAFFLE) S1-1759D

7'-8" (BAFFLE) S1-1759C

7'-10" I.S.

1" FAN

PREHEATER PROTECTION DOOR S1-1670

DUAL T/C

¾" x 2½" WALL OPENINGS SEE DETAIL 3

½" SPACE

DETAIL 1 DETAIL 2

3'-11" 3'-8" 2'-11"

HOT GAS DUCT OPENING NEARSIDE (FOR UNIT 2)
BONDED RING (48 - #3 WEDGE & 17 - #2 WEDGE)
93 - #3 WEDGE 9 x 4½ x (3-2)
66 - #3 WEDGE 9 x 6¾ x (3-2)
68 - #2 WEDGE 9 x 4½ x (3-2½)

14'-3" 9" WALL TO BE LAID DRY

SPACE BELOW ALL DOORS TO BE PACKED WITH FIBERFRAX LOOSE FELT

25'-7"

SECT. A-A
AS SHOWN FOR UNIT 2
OPPOSITE HAND FOR UNIT 1

ANCHORS & KAST-SET REFR. FOR THIS WALL FURNISHED & INSTALLED BY A.P. GREEN FIREBRICK CO.

18'-3⅜" SUSPENDED ARCH

2½" DECRETE 40 CASTABLE INSULATION

2" PIPE PLUG ¾" PIPE PIPE SUPPORT TAA

FURNACE DRAFT GAGE CONN. "FD"

STIC-TITE

BONDED ARCH
15 - #3 WEDGE 9 x 4½ x (3-2)
14 - #2 WEDGE 9 x 6¾ x (3-2½) } PER ARCH
6 - SKEWBACK 60-9

9 x 3½ x 2½ TO BE LAID DRY

OMIT 7½" TILE & PACK WITH PLASTIC REFR.

PACK WITH FIBERFRAX BULK FIBER

18'-0" I.S.

HIGH DUTY FIREBRICK

WALL ANCHOR

12 GA. STL. CASING

3" INSUL. BLOCK

21¾" O.D. TILE SUPPORT RING

23" I.D. ARCH BRICK

BONDED JACK ARCH CUT FROM NO. 3 WEDGES
12 - #3 WEDGE 9 x 4½ x (3-2) } PER ARCH
8 - #3 WEDGE 9 x 6¾ x (3-2)

INSP. PORT DI-730 NEARSIDE & FARSIDE

FLARE SIDES 90°

FLARE BOTTOM 45°

RELIEF DOOR CCC-28 NEARSIDE & FARSIDE

¼" SPACE

HIGH DUTY FIREBRICK 2300°F INSUL. FIREBRICK } TO BE LAID DRY
¼" ASBESTOS BOARD
LITE-WATE 80 REFR.

1" GROUT

1" SPACE (ON 4 SIDES). PACK WITH FIBERFRAX BULK FIBER

EL. 54'-6"

30'-7" O.S.

SECT. B-B
AS SHOWN FOR UNIT 2
OPPOSITE HAND FOR UNIT 1

13'-3" O.S.

FILL BALANCE OF EXP. JOINTS WITH 2 THICKNESSES OF ½" THICK FIBERFRAX LO-CON FELT, COMPRESSED TO FILL ½" SPACE, AS WALL IS BUILT.
2 STRANDS OF ¾" DIA. FIBERFRAX ROPE

STIC-TITE

S1-1581

¼" SPACE

7'-10" I.S.

6" ¼" SPACE 9"

10'-0" I.S.

SECTION J-J
TYPICAL CORNER AT PREHEATER OUTLET

3 - #2 ARCH 9 x 4½ x (2½-2⅜)
8 - #1 ARCH 9 x 4½ x (2½-1¾)
2 - SKEWBACK 60-9½

STIC-TITE

EL. 77'-1½"

BAFFLE S1-1759C

BAFFLE S1-1759A

SEE DETAIL 4

10'-0" I.S.

SEE D-S1-1740 & D-S1-1741 FOR WALL OPENINGS FOR ALL SOOT BLOWERS

PLASTIC REFR.

½" SPACE

BONDED ARCH PER ARCH
12 - #3 WEDGE 9 x 4½ x (3-2)
10 - #3 WEDGE 9 x 6¾ x (3-2)
6 - #2 WEDGE 9 x 4½ x (3-2½)
6 - SKEWBACK 60-9

DETAIL 1 DETAIL 1

20 SKEWBACK 60-9½

LAY WALL DRY

HOT GAS DUCT

ACCESS DOOR CCC-8 4 REQ'D.

DETAIL 1

TUBE #

1" 2½" 2½" 2½" 2½" 1" 5" 2½" 2½" 1" 2½"

9"-48° SIDE SKEW 9 x (4½ - 2¾) x 2½

DETAIL 2

STIC-TITE

DUAL T/C

DETAIL 3

½" SLOT IN BRICK

BAFFLE S1-1759C

DETAIL 4

J-0

W. W. PECORA MICHIGAN DATE 6/26/82 CONTR. NO. 4277

JOB NO. 3304-DS
RAYMOND DIVISION, CHICAGO, ILL.

BINKLEY & HOLMES, INC. Consulting Engineers
☑ NO EXCEPTIONS NOTED
☐ EXCEPTIONS NOTED
MAKE AND RESUBMIT FOR DISTRIBUTION
☐ RETURNED FOR CORRECTION
Review does not relieve contractor of responsibility for conformity with contract requirements, correct details and fit of parts when assembled.
BINKLEY & HOLMES, INC. BY ____ DATE 5/26/78
CITY OF HOUSTON BY ____ DATE

ASBUILT SHOP DRAWING

D-S1-1696

FURNACE SECTIONS - UNITS 1&2

FOR CITY OF HOUSTON

SCALE 1/2" = 1'-0" DRAWN BY TRACED BY
DATE 5-20-77 CHECKED BY APPROVED 5/30-7-77

THIS DRAWING IS THE PROPERTY OF COMBUSTION ENGINEERING, INC. AND IS NOT TO BE REPRODUCED, OR USED TO FURNISH ANY INFORMATION FOR MAKING OF DRAWINGS OR APPARATUS EXCEPT WHERE PROVIDED FOR BY AGREEMENT WITH SAID COMPANY.

DRAWING NO. D-S1-1737-1

DWG. NO. 18045 (SHT. NO 13 OF)

DIETZGEN NO. 138-3 AGEPROOF

D-SI-1738	REVISION	1	ADD. DETRICK NOTE E 4-7-78

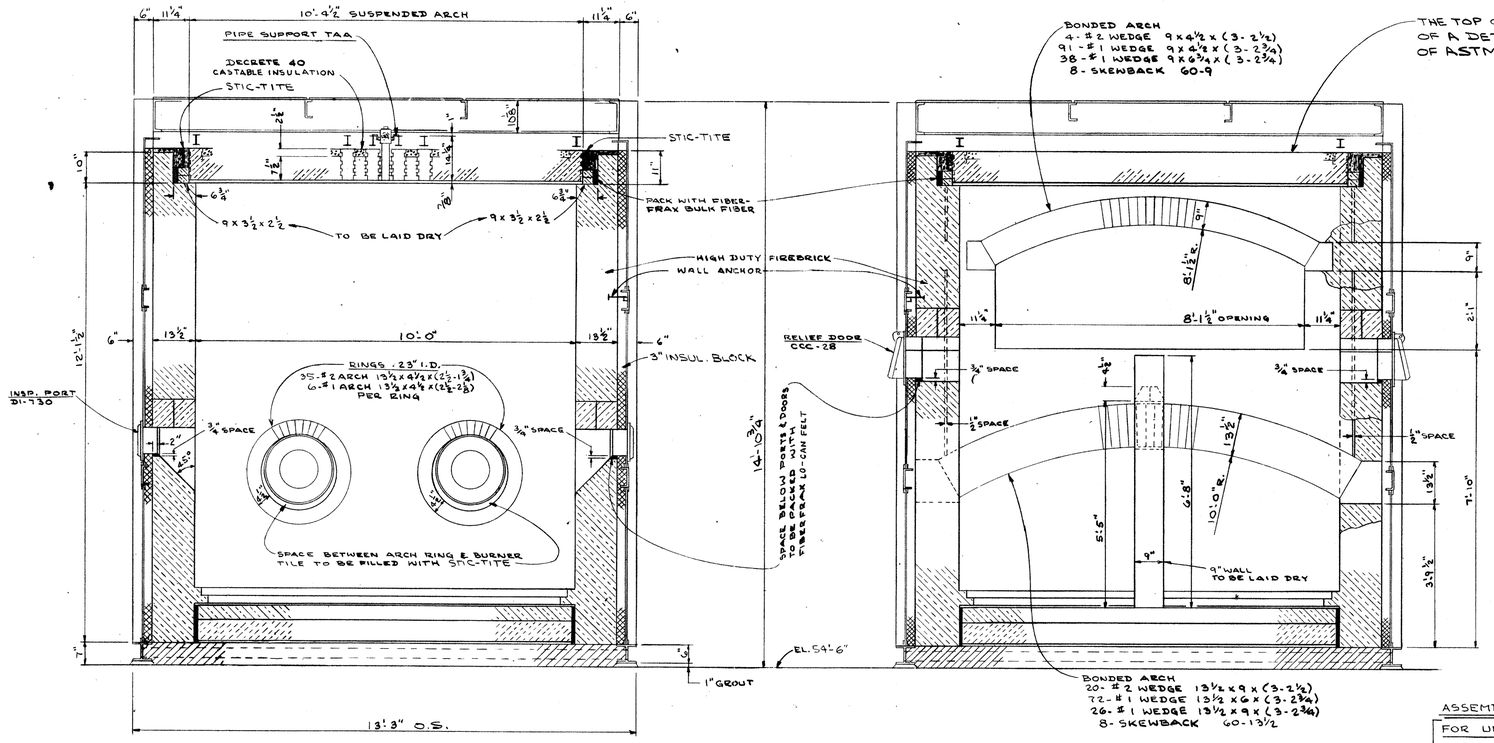

ASSEMBLY DRAWINGS

FOR UNITS-1&2

- SECTIONS — ELEV. D-SI-1737; PLAN. D-SI-1739
- FIELD WELDING — D-SI-1700
- SOOT BLOWER PIPING — D-SI-1756
- WALL ANCHOR ARRANGEMENT — E-SI-1699

FOR UNIT-1

- STRUCTURAL FRAMING — PLAN D-SI-1732; ELEV. D-SI-1733; ELEV. D-SI-1734

FOR UNIT-2

- STRUCTURAL FRAMING — PLAN D-SI-1732; ELEV. D-SI-1735; ELEV. D-SI-1736

D-SI-1697

ASBUILT SHOP DRAWING

BUNLEY & HOLMES, INC. Consulting Engineers
☐ NO EXCEPTIONS NOTED
☐ EXCEPTIONS NOTED
☐ MAKE AND RESUBMIT FOR INFORMATION
☐ RETURNED FOR CORRECTION
Review does not relieve contractor of responsibility for conformity with contract requirements, correct details and fit of parts when assembled.
BUNLEY & HOLMES, INC. BY _____ DATE 5/3/78
CITY OF HOUSTON BY _____ DATE _____

J.O.

JOB NO. 3304-DS

W. W. RECORDS MICROFILM DATE 6/6/78

RAYMOND DIVISION, CHICAGO, ILL. CONTR. NO. 41277

FURNACE SECTIONS - UNITS 1&2

FOR CITY OF HOUSTON

SCALE ½" = 1'-0" DRAWN BY L TRACED BY

DATE 5-20-77 CHECKED BY [illegible] APPROVED [illegible] 10-7-77

THIS DRAWING IS THE PROPERTY OF COMBUSTION ENGINEERING, INC. AND IS NOT TO BE REPRODUCED, OR USED TO FURNISH ANY INFORMATION FOR MAKING OF DRAWINGS OR APPARATUS EXCEPT WHERE PROVIDED FOR BY AGREEMENT WITH SAID COMPANY.

DRAWING NO. D-SI-1738-1

DWG. NO. 18045 (SHT. NO. 14 OF [illegible])

DIETZGEN NO. 135-3 AGEPROOF

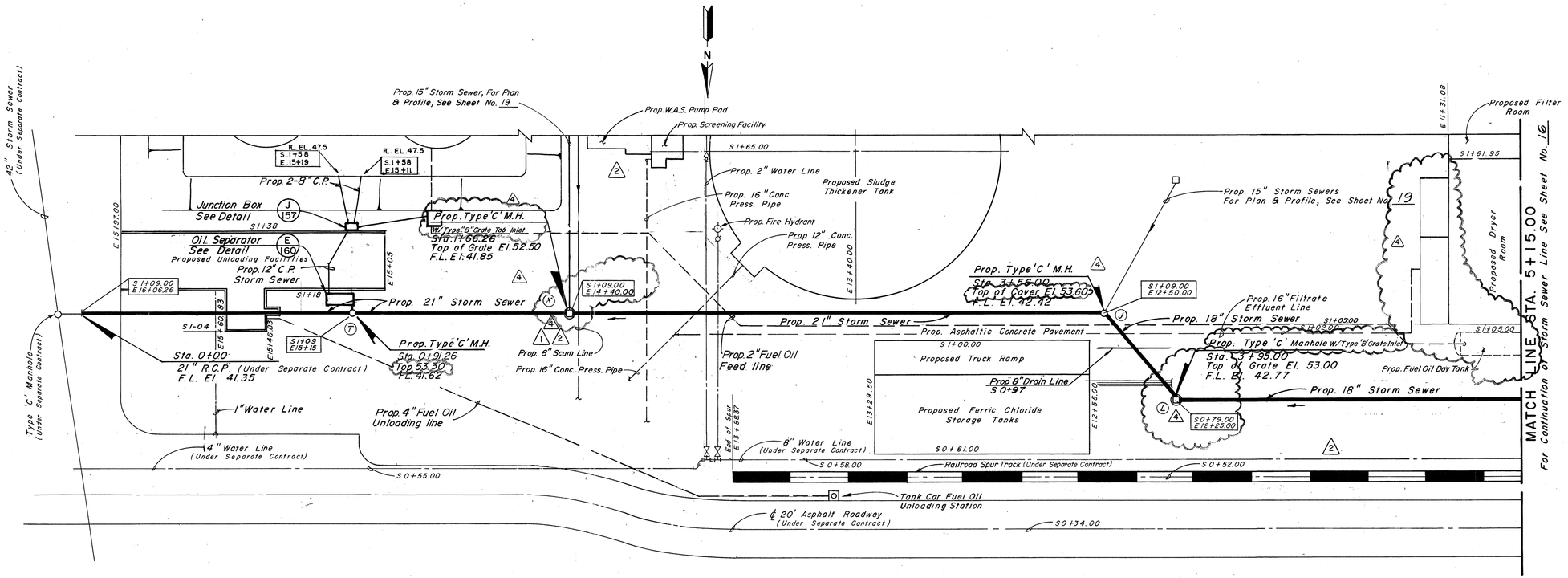

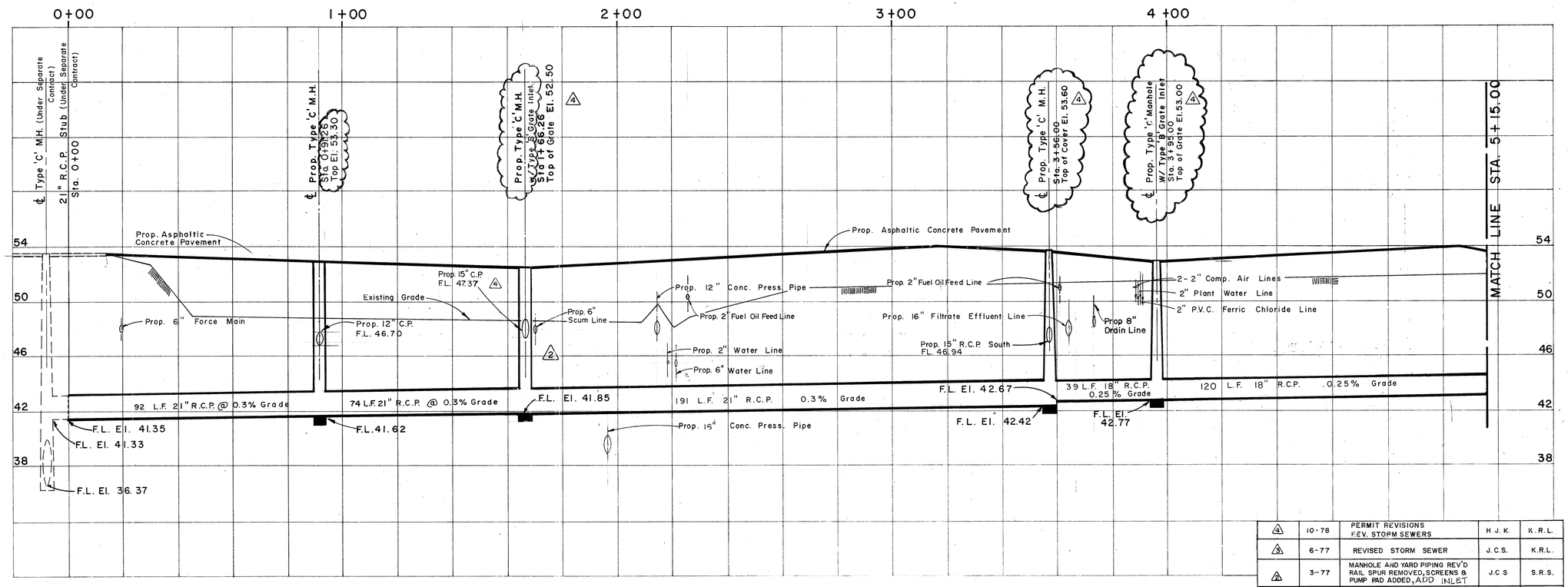

CITY BENCH MARK
5351
CITY SURVEY MARKER 0116
EL. 54.67

REV.NO.	DATE	DESCRIPTION	DESIGN	CHECKED
4	10-78	PERMIT REVISIONS REV. STORM SEWERS	H.J.K.	K.R.L.
3	6-77	REVISED STORM SEWER	J.C.S.	K.R.L.
2	3-77	MANHOLE AND YARD PIPING REV'D RAIL SPUR REMOVED, SCREENS & PUMP PAD ADDED, ADD INLET	J.C.S	S.R.S.
1	4-1-1976	BLOWER PAD DELETED & 8" AIR LINE MODIFIED	J.J.	D.R.Y.

CITY OF HOUSTON
DEPARTMENT OF PUBLIC WORKS

ALMEDA SIMS
SLUDGE DISPOSAL
PLANT – 1973

PLAN & PROFILE

21", 18" & 15" STORM SEWERS

RECOMMENDED FOR APPROVAL:
BINKLEY & HOLMES, INC., CONSULTING ENGINEERS

APPROVED:
CHIEF ENGINEER
ASST. CHIEF ENGINEER
ASST. DIRECTORS OF PUBLIC WORKS
DIRECTOR OF PUBLIC WORKS

DESIGNED BY: M. D. J., H.R.E.
DRAWN BY: G. DORMAN
CHECKED BY: M. D. J., H.R.E.
SCALE: 1" = 20' Horiz., 1" = 4' Vert.
DATE: Dec., 1973
SHEET 15 OF 200 SHEETS
DRAWING NO. 18045

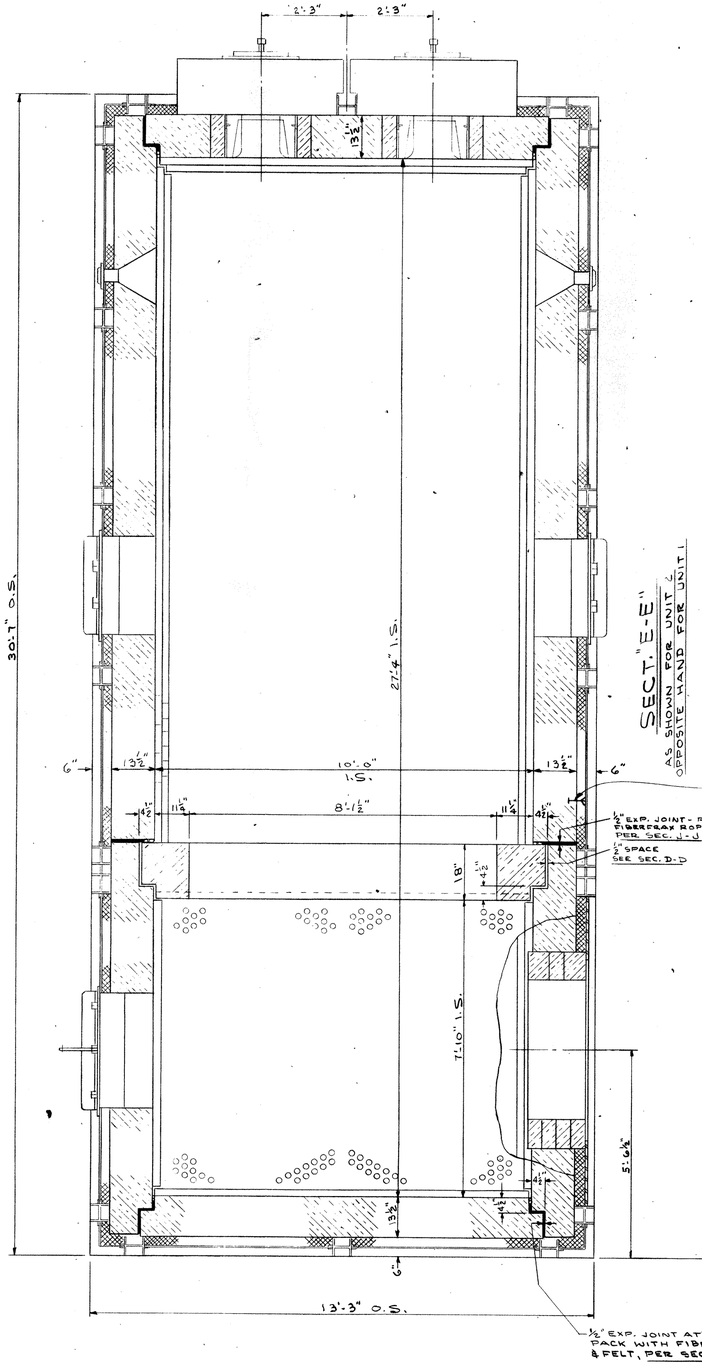

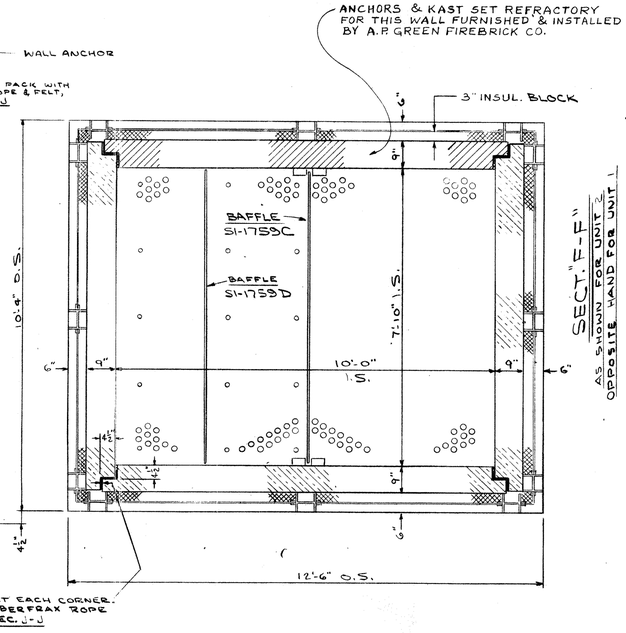

GENERAL NOTES.

ALL BRICK SHALL BE DRY & FREE FROM SPALLS.
WALLS SHALL BE BONDED, WITH ALTERNATE HEADER & STRETCHER COURSES, PER DRAWING S-287.

INSTALL WALL ANCHORS

BRICK IN FURNACE FLOOR, 9" DIVIDING WALL AT REAR OF FURNACE, ACCESS DOORS AT PREHEATER, & 9 x 3½ x 2½" BRICK AT SIDES & ENDS OF SUSPENDED ARCH SHALL BE LAID DRY.

ALL OTHER BRICK SHALL BE LAID WITH DIPPED JOINTS.

EXPANSION JOINT SHALL BE MADE AS SHOWN ON DRAWINGS, & SHALL RUN THE ENTIRE HEIGHT OF THE WALLS.

ALL CUTS WHICH WILL BE EXPOSED ON HOT FACE OF WALLS, CUTS MADE TO FIT UP TO RINGS, ARCHES, SKEWBACKS & AT EXPANSION JOINTS SHALL BE MADE ON A SAW. NO HAND CUTTING PERMITTED AT THESE POINTS.

MATERIAL LIST

HIGH DUTY FIREBRICK

QUANTITY	DESCRIPTION
23,250	STRAIGHT 9 x 4½ x 2½
1,390	STRAIGHT 9 x 6¾ x 2½
530	STRAIGHT 13½ x 4½ x 2½
100	SPLIT 9 x 4½ x 1¼
10	# 1 ARCH 9 x 4½ x (2½-2⅛)
14	# 1 ARCH 13½ x 4½ x (2½-2⅛)
4	# 2 ARCH 9 x 4½ x (2½-1¾)
80	# 2 ARCH 13½ x 4½ x (2½-1¾)
860	STRAIGHT 9 x 4½ x 3
35	STRAIGHT 9 x 6¾ x 3
20	STRAIGHT 13½ x 4½ x 3
100	SPLIT 9 x 4½ x 1½
100	# 1 WEDGE 9 x 4½ x (3-2¾)
40	# 1 WEDGE 9 x 6¾ x (3-2¾)
75	# 1 WEDGE 13½ x 6 x (3-2¾)
28	# 1 WEDGE 13½ x 9 x (3-2¾)

QUANTITY	DESCRIPTION
125	# 2 WEDGE 9 x 4½ x (3-2½)
50	# 2 WEDGE 9 x 6¾ x (3-2½)
22	# 2 WEDGE 13½ x 9 x (3-2½)
200	# 3 WEDGE 9 x 4½ x (3-2)
120	# 3 WEDGE 9 x 6¾ x (3-2)
100	9"-48° SIDESKEW 9 x (4½-2¼) x 2½
3	60°-4½" SKEWBACK PER S-267C
45	60°-9" SKEWBACK PER S-267
9	60°-13½" SKEWBACK PER S-267A
340	SMALL 9" 9 x 3½ x 2½

MISCELLANEOUS

QUANTITY	DESCRIPTION
3,050	2300° INSULATING FIREBRICK STRAIGHT 9 x 4½ x 2½
350 LB.	CE REFR. BB1601 PLASTIC REFRACTORY
8,500 LB.	CE REFR. SUPER 3000 B/S BONDING MORTAR
200 CU. FT.	CE REFR. LITE WATE 80 CASTABLE REFRACTORY
1,000 LB.	CE REFR. STIC-TITE INSULATING CEMENT
1,380 SQ. FT.	CE REFR. CAL SIL INSULATING BLOCK 12" x 18" x 3" THK.
325 SQ. FT.	½" THK. X 12" WIDE FIBERFRAX LO-CON FELT 6 LB. DENSITY
17½ LB.	¾" DIA. FIBERFRAX ROPE
87½ LB.	FIBERFRAX BULK FIBER
9 SHEETS	4 FT. x 8 FT. x ¼" THICK ASBESTOS BOARD (FURNISH IN FIELD)

QUANTITIES LISTED ARE FOR 1 UNIT, & INCLUDE ALLOWANCE FOR WASTE.

ASSEMBLY DRAWINGS

FOR UNITS 1 & 2
- SECTIONS - ELEV. — D-S1-1737, D-S1-1738
- FIELD WELDING — D-S1-1700
- SOOT BLOWER PIPING — D-S1-1756
- WALL ANCHOR ARRANGEMENT — E-S1-1699

FOR UNIT 1
- STRUCTURAL FRAMING — PLAN D-S1-1732; ELEV. D-S1-1733; ELEV. D-S1-1734
- DEODORIZING PREHEATER — D-S1-1740

FOR UNIT 2
- STRUCTURAL FRAMING — PLAN D-S1-1732; ELEV. D-S1-1735; ELEV. D-S1-1736
- DEODORIZING PREHEATER — D-S1-1741

J-0

JOB NO. 3304-D5

ASBUILT SHOP DRAWING

RAYMOND DIVISION, CHICAGO, ILL. CONTR. NO. 41277

W. W. RECORDS MICROFILM DATE 6/26/82

DUNKLEY & HOLMES, INC. Consulting Engineers
- NO EXCEPTIONS NOTED
- EXCEPTIONS NOTED — MAKE AND RESUBMIT FOR DISTRIBUTION
- RETURNED FOR CORRECTION

Review does not relieve contractor of responsibility for conformity with contract requirements, correct details and fit of parts when assembled.

DUNKLEY & HOLMES, INC. BY ___ DATE 5/26/78
CITY OF HOUSTON BY ___ DATE

D-S1-1638

FURNACE SECTIONS - UNITS 1 & 2

FOR CITY OF HOUSTON

SCALE 1½"=1'-0" | DATE 5-20-77
DRAWN BY L | CHECKED BY
TRACED BY | APPROVED JS 10-7-77

THIS DRAWING IS THE PROPERTY OF COMBUSTION ENGINEERING, INC. AND IS NOT TO BE REPRODUCED, OR USED TO FURNISH ANY INFORMATION FOR MAKING OF DRAWINGS OR APPARATUS EXCEPT WHERE PROVIDED FOR BY AGREEMENT WITH SAID COMPANY.

DRAWING NO. D-S1-1739-0

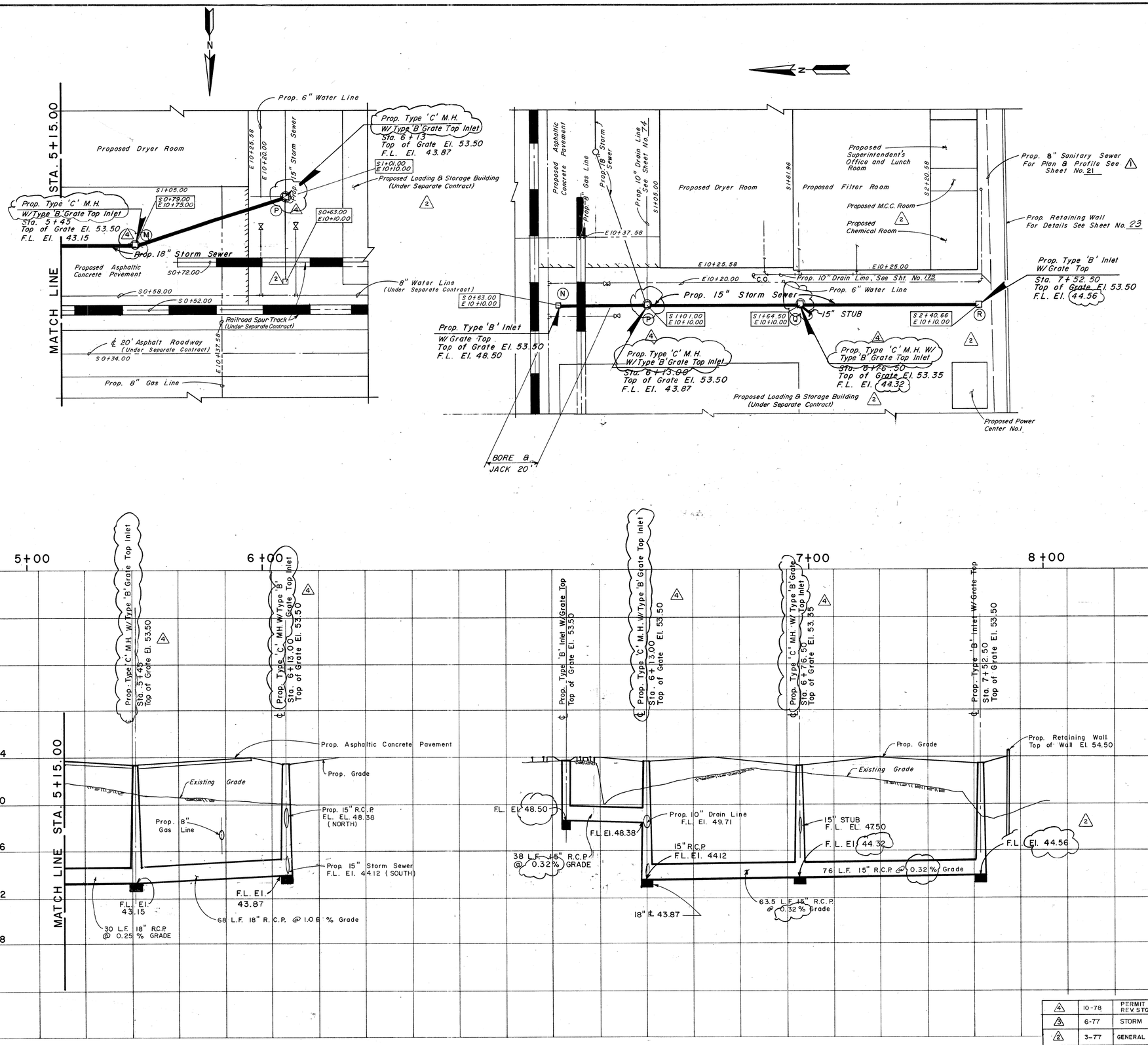

CITY BENCH MARK
5351
CITY SURVEY MARKER 0116
EL. 54.67

REV.NO.	DATE	DESCRIPTION	DESIGN	CHECKED
4	10-78	PERMIT REVISIONS REV. STORM SEWER	H.J.K.	K.R.L.
3	6-77	STORM SEWER REVISIONS	J.C.S.	K.R.L.
2	3-77	GENERAL REVISIONS	J.J.	S.R.S.
1	4-1-1976	SANITARY SEWER REVISED	J.J.	D.R.Y.

CITY OF HOUSTON
DEPARTMENT OF PUBLIC WORKS

ALMEDA SIMS
SLUDGE DISPOSAL
PLANT – 1973

PLAN & PROFILE
15" STORM SEWER

RECOMMENDED FOR APPROVAL:
BINKLEY & HOLMES, INC., CONSULTING ENGINEERS

APPROVED:
CHIEF ENGINEER
ASST. CHIEF ENGINEER

ASST. DIRECTORS OF PUBLIC WORKS
DIRECTOR OF PUBLIC WORKS

DESIGNED BY: M. D. J.
DRAWN BY: G. DORMAN
CHECKED BY: M. D. J.
SCALE: 1"= 20' Horiz., 1"= 4' Vert.
DATE: Dec., 1973
SHEET 16 OF 200 SHEETS
DRAWING NO. 18045

D-SI-1740	REVISION	1	SOOT BLOWER SI-1770 & NRS "BB" & "BD" 4-7-78

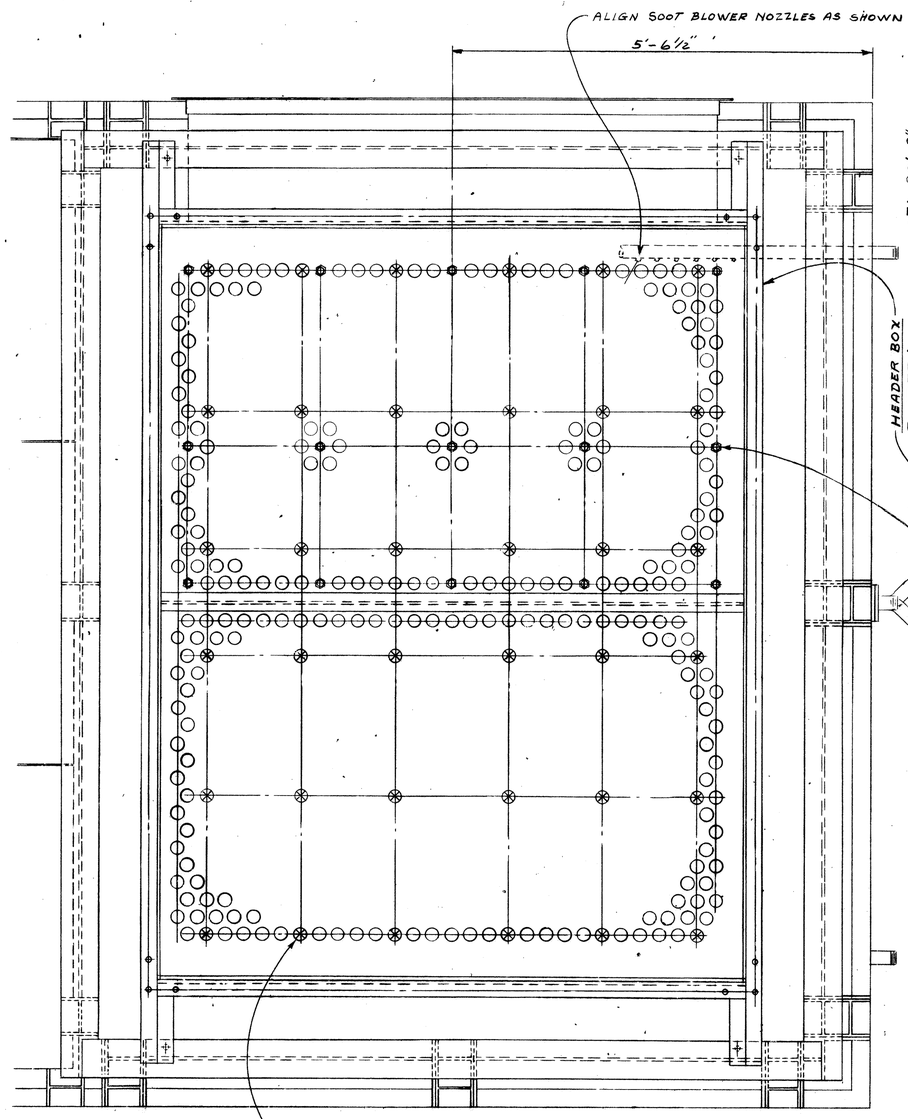

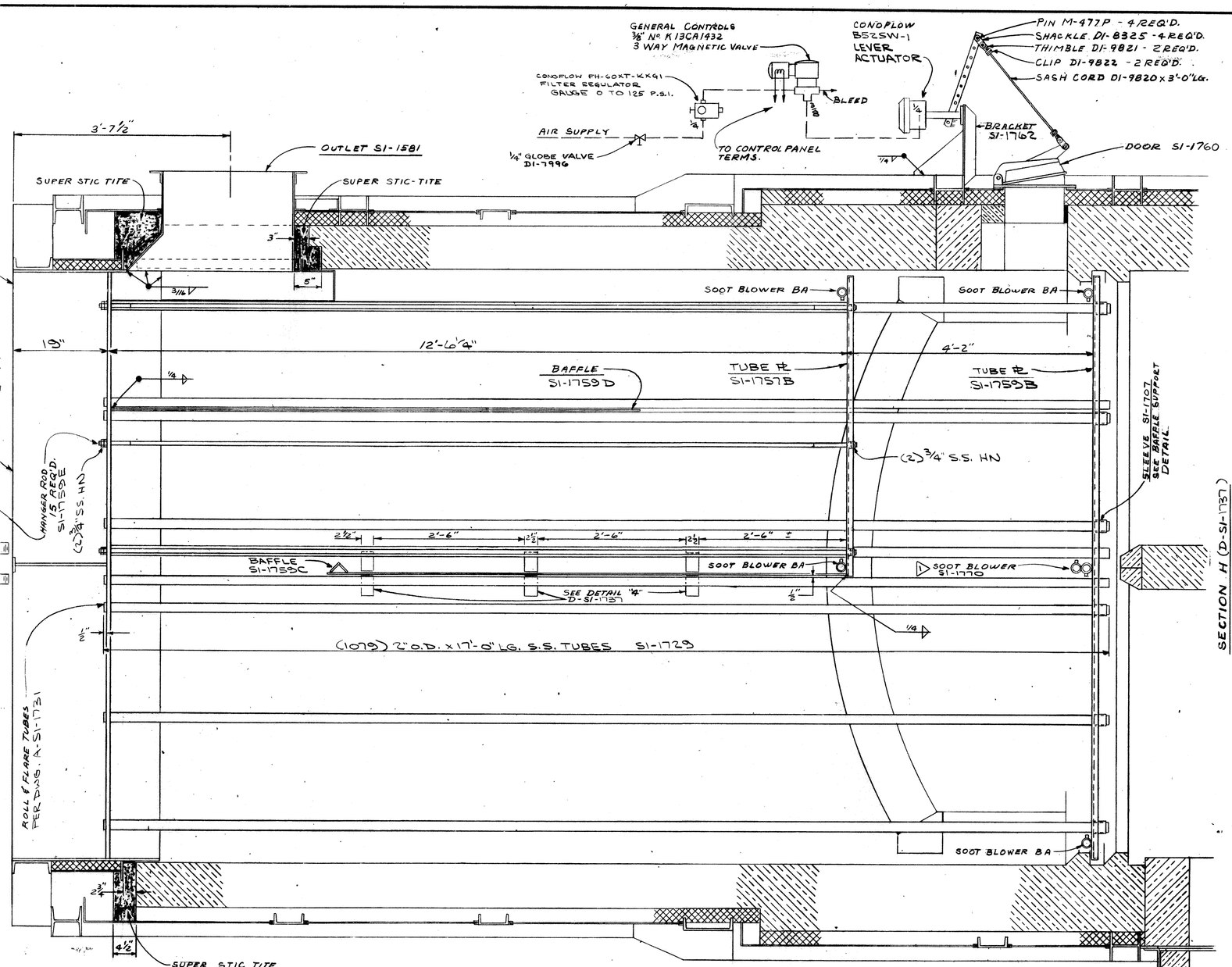

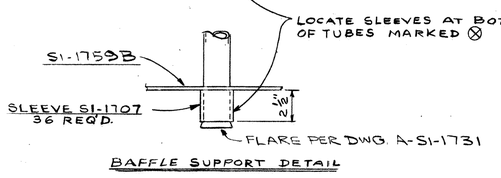

BAFFLE SUPPORT DETAIL

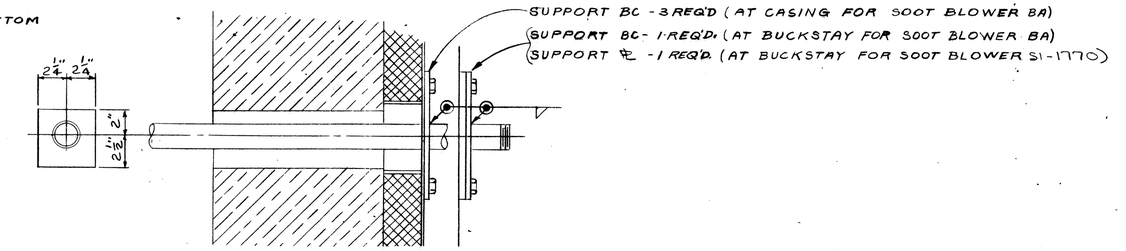

TYPICAL WALL OPENING FOR SOOT BLOWERS

BINKLEY & HOLMES, INC. Consulting Engineers
☐ NO EXCEPTIONS NOTED
☐ EXCEPTIONS NOTED
REVISE AND RESUBMIT FOR INFORMATION
☐ RETURNED FOR CORRECTION
Review does not relieve contractor of responsibility for conformity with contract requirements, correct details and fit of parts when assembled.
BINKLEY & HOLMES, INC. BY [signature] DATE 5/2/78
CITY OF HOUSTON BY [signature] DATE

J-0

FIELD ASSEMBLY

ASBUILT SHOP DRAWING

D-SI-1683

W. W. RECORDS MICROFILM DATE 6/26/84 CONTR. NO. 41277

JOB NO. 3304-DS

RAYMOND DIVISION, CHICAGO, ILL.

DEODORIZING PREHEATER ASSEMBLY

FOR FURNACE #1

CITY OF HOUSTON

SCALE 1"=1'2" DRAWN BY [illegible] TRACED BY

DATE 6-15-77 CHECKED BY [illegible] APPROVED [illegible] 6-15-77

THIS DRAWING IS THE PROPERTY OF COMBUSTION ENGINEERING, INC. AND IS NOT TO BE RE-PRODUCED, OR USED TO FURNISH ANY INFORMATION FOR MAKING OF DRAWINGS OR APPARATUS EXCEPT WHERE PROVIDED FOR BY AGREEMENT WITH SAID COMPANY.

DRAWING NO. D-SI-1740-1

DWG. NO. 18045 (SHT. NO. 16 OF. [illegible])

DIETZGEN NO. 107A RALTON

D-SI-1741 | REVISION | 1 | SOOT BLOWER SI-1770 & WAS "BB" & "BE" 4-78

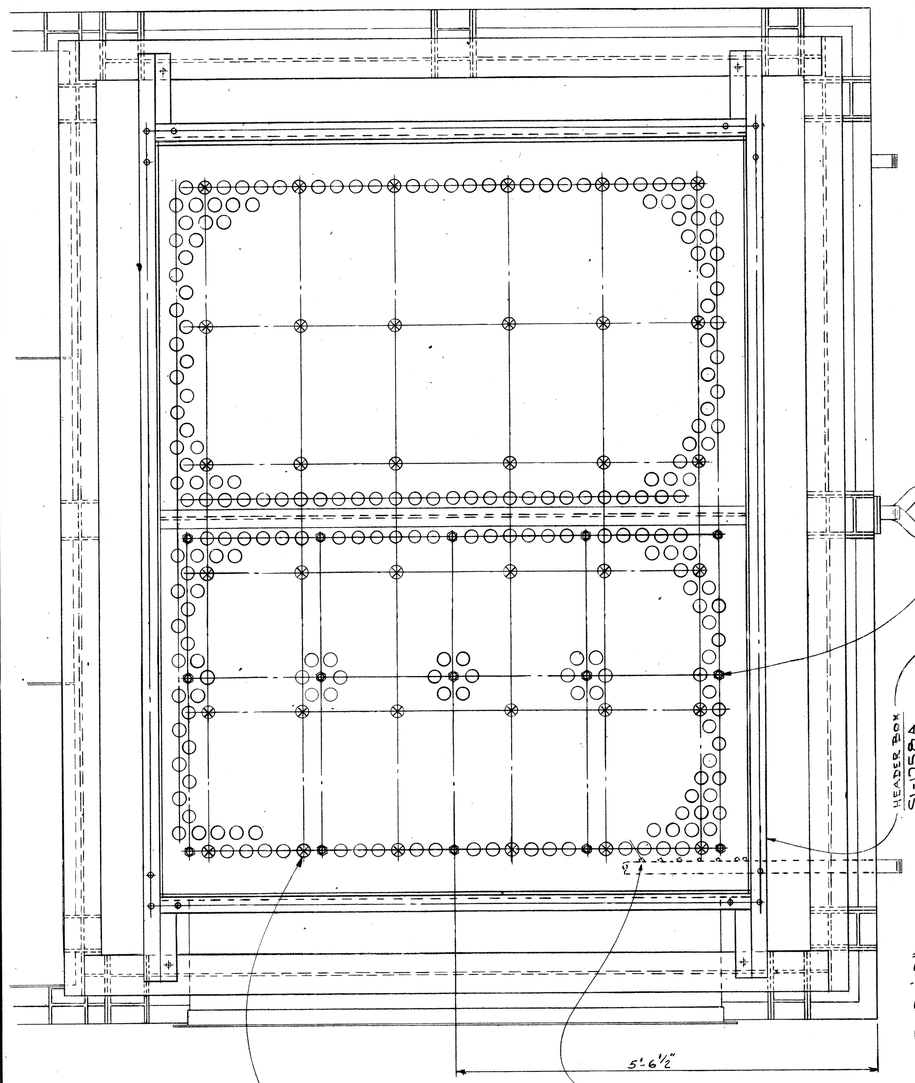

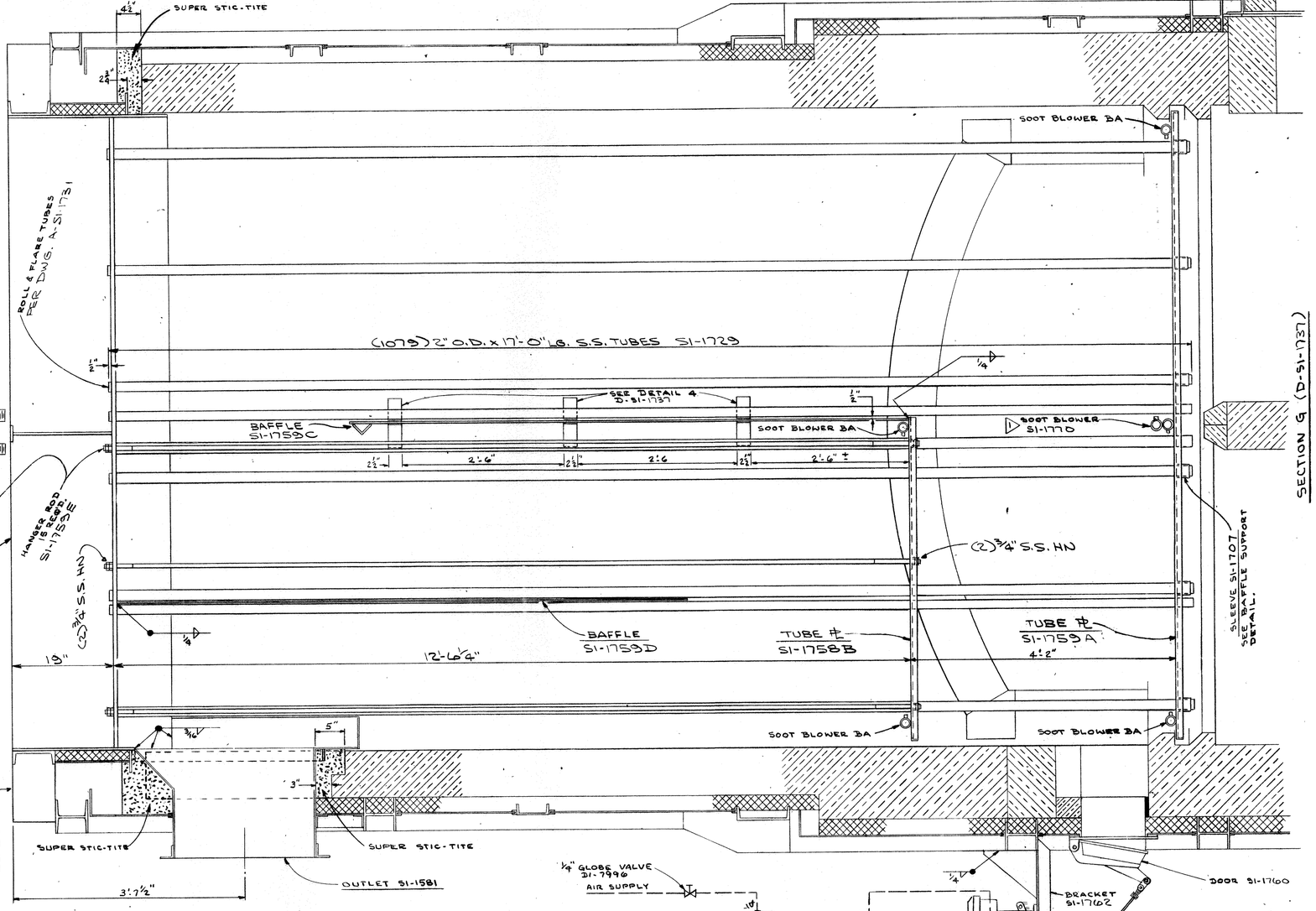

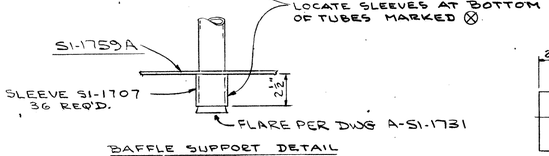

BAFFLE SUPPORT DETAIL

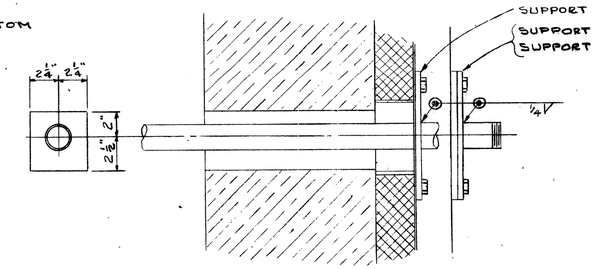

TYPICAL WALL OPENING FOR SOOT BLOWERS

SUPPORT BC - 3 REQ'D. (AT CASING FOR SOOT BLOWER BA)
SUPPORT BC - 1 REQ'D (AT BUCKSTAY FOR SOOT BLOWER BA)
SUPPORT ℄ - 1 REQ'D (AT BUCKSTAY FOR SOOT BLOWER SI-1770)

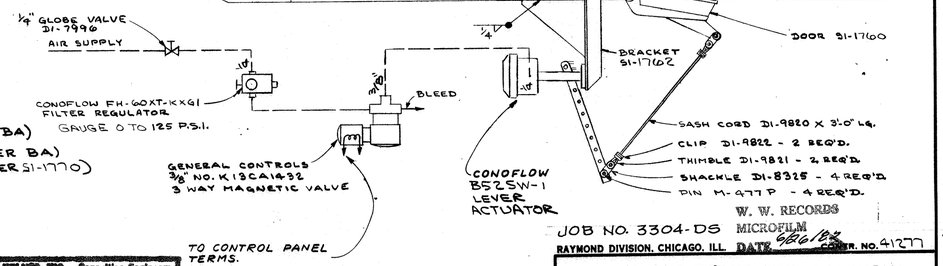

FIELD ASSEMBLY

KINKLEY & HOLMES, INC. Consulting Engineers
☑ NO EXCEPTIONS NOTED
☐ EXCEPTIONS NOTED
REVISE AND RESUBMIT FOR DISTRIBUTION
☐ RETURNED FOR CORRECTION
Review does not relieve contractor of responsibility for conformity with contract requirements, correct details and fit of parts when assembled.
KINKLEY & HOLMES, INC. BY [signature] DATE 5/2/78
CITY OF HOUSTON BY [signature] DATE

ASBUILT SHOP DRAWING

D-SI-1682

J-0

W. W. RECORDS MICROFILM
JOB NO. 3304-DS
RAYMOND DIVISION, CHICAGO, ILL. DATE 6/6/78 CONTR. NO. 41277

DEODORIZING PREHEATER ASSEMBLY
FOR FURNACE #2
CITY OF HOUSTON

SCALE 1"=12" DATE 6-15-77
DRAWN BY [illegible] CHECKED BY [illegible]
TRACED BY APPROVED [illegible] 6-15-77

THIS DRAWING IS THE PROPERTY OF COMBUSTION ENGINEERING, INC. AND IS NOT TO BE REPRODUCED, OR USED TO FURNISH ANY INFORMATION FOR MAKING OF DRAWINGS OR APPARATUS EXCEPT WHERE PROVIDED FOR BY AGREEMENT WITH SAID COMPANY.

DRAWING NO. D-SI-1741-1

DWG. NO. 18045 (SHT. NO. 17 OF)

DIETZGEN NO. 135-S AGEPROOF

D-S1-1756 | REVISION | 1 | PIPE 2 WAS (1) ... & S1-1771 WAS S1-1605 4-7-78

NOTE:

DURING NORMAL OPERATION THE CARRYOVER DUST FROM THE CYCLONE VAPORS MAY SETTLE ON THE PREHEATER BAFFLE PLATES.
THIS DUST SHOULD BE ELIMINATED ONCE EACH HOUR, OR AS OPERATION REQUIRES.

TO BLOW OUT DUST ON PREHEATER BAFFLES USE QUICK OPENING VALVES FOR A FEW SECONDS AT A TIME, STARTING WITH VALVE Nº 1 AND IN QUICK ROTATION WITH Nº 2 THROUGH Nº 5
THIS KEEPS THE RAISED DUST FLOWING IN DIRECTION OF GAS FLOW TO STACK.

WARNING: ALWAYS CLEAN OUT DUST JUST BEFORE CLOSING DOWN THE FURNACE

NOTE:

PIPING FROM HEADER TO SOOT BLOWER CONNECTIONS AT FURNACE SHALL BE SCHEDULE 40 AND WILL BE FURNISHED AND INSTALLED BY C.E.

VALVES SHOWN ARE FURNISHED AND WILL BE SHIPPED TO JOBSITE BY C.E.

AIR SUPPLY PIPING TO HEADER IS NOT FURNISHED OR INSTALLED BY C.E.

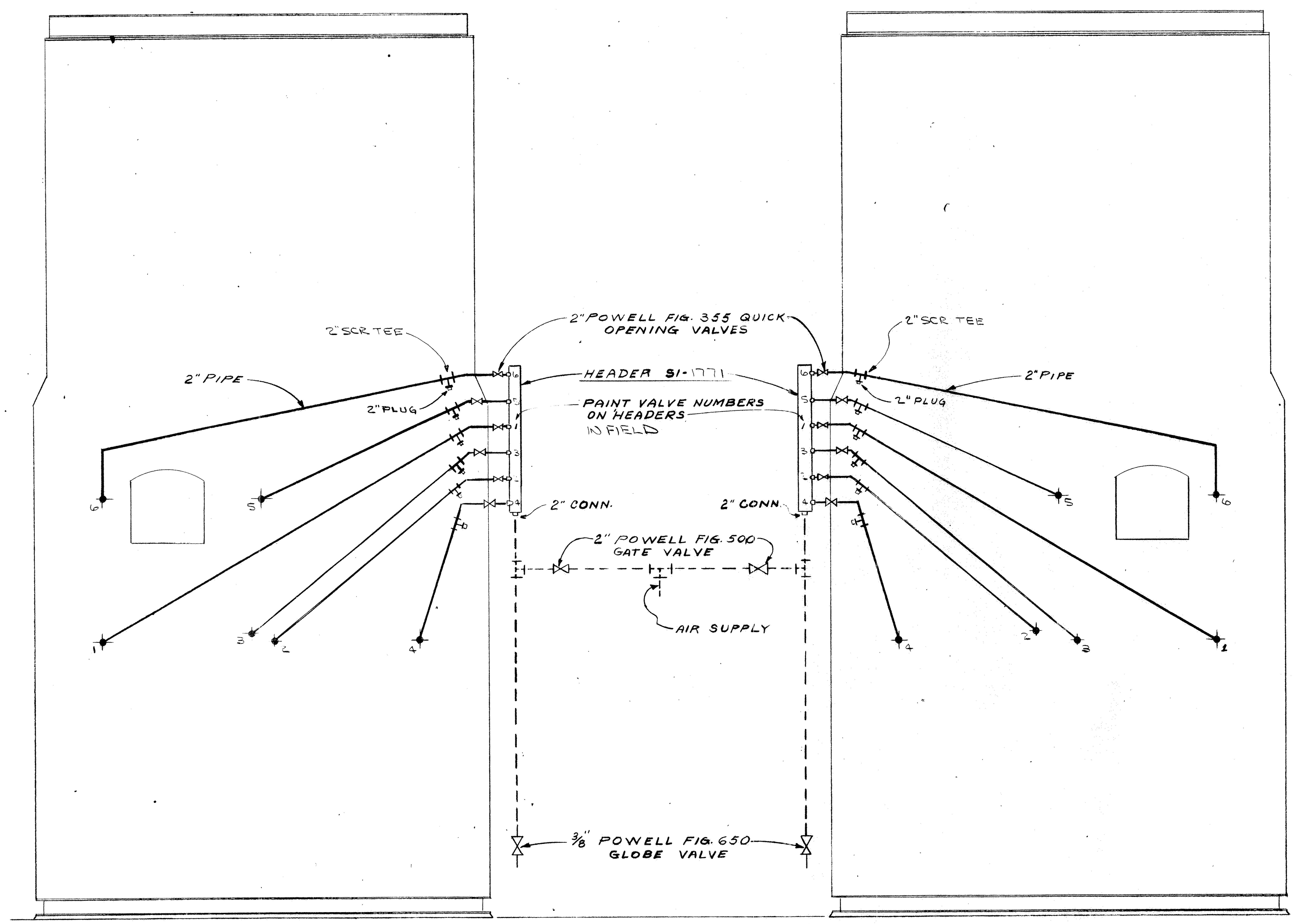

UNIT 2 | UNIT 1

J-0

W. W. RECORDS MICROFILM DATE 6/26/82

JOB NO. 3304-DS

Review does not relieve contractor of responsibility for conformity with contract requirements, correct details and fit of parts when assembled.
CITY OF HOUSTON BY ... DATE

ASBUILT SHOP DRAWING
D-S1-1701

RAYMOND DIVISION, CHICAGO, ILL. CONTR. NO. 41277

SOOT BLOWER PIPING
FOR FURNACES
CITY OF HOUSTON, TEXAS

SCALE 1/2" = 12" | DATE 5-16-77
DRAWN BY | CHECKED BY
TRACED BY | APPROVED RJS 10-7-77

THIS DRAWING IS THE PROPERTY OF COMBUSTION ENGINEERING, INC.
AND IS NOT TO BE REPRODUCED, OR USED TO FURNISH ANY INFORMATION FOR MAKING OF DRAWINGS OR APPARATUS EXCEPT WHERE PROVIDED FOR BY AGREEMENT WITH SAID COMPANY.

DRAWING NO. D-S1-1756-1

DWG. NO. 18045 (SHT. NO. 18 OF)

DIETZGEN NO. 130-8 AGEPROOF

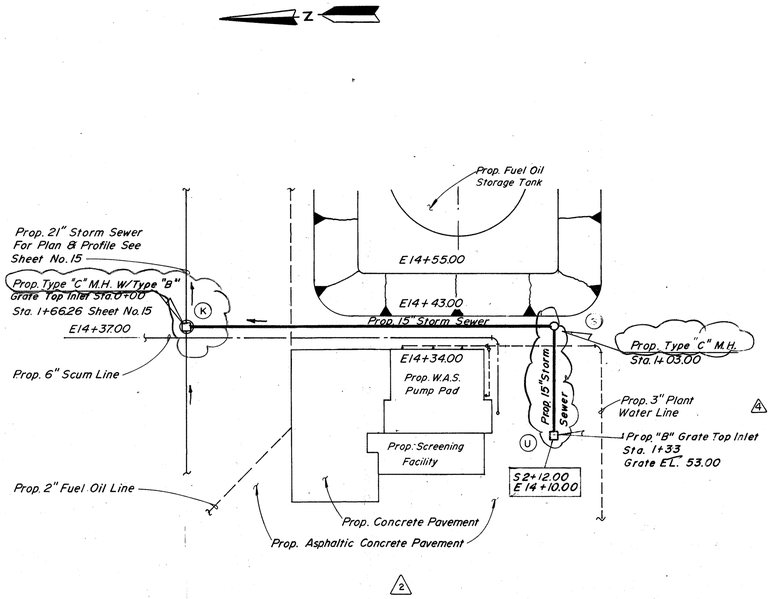

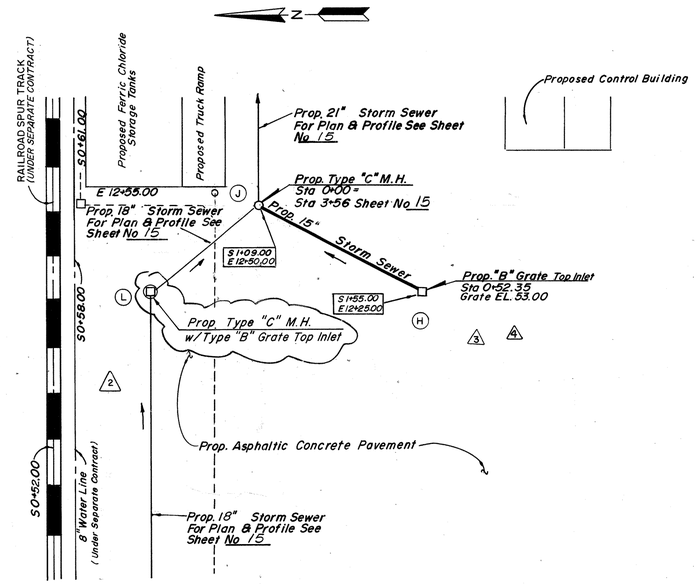

CITY BENCH MARK
5351
CITY SURVEY MARKER 0116
EL 5 4.67

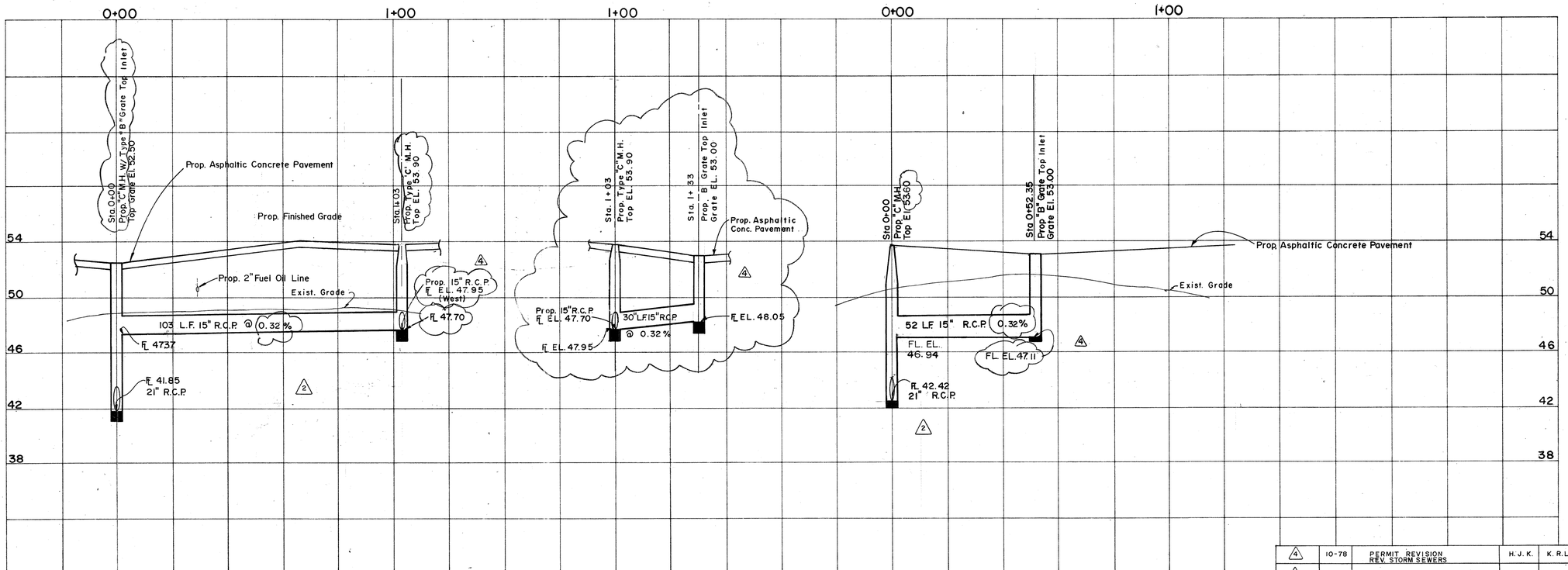

REV. NO.	DATE	DESCRIPTION	DESIGN	CHECKED
4	10-78	PERMIT REVISION REV. STORM SEWERS	H. J. K.	K. R. L.
3	6-77	REVISED STORM SEWER	J. C. S.	K. R. L.
2	3-77	PLAN & PROFILE ADDED, RAIL SPUR & SCUM LINE REMOVED	J. C. S	S. R. S.

CITY OF HOUSTON
DEPARTMENT OF PUBLIC WORKS

ALMEDA SIMS
SLUDGE DISPOSAL
PLANT – 1973

PLAN & PROFILE

15" STORM SEWER

RECOMMENDED FOR APPROVAL:
BINKLEY & HOLMES, INC., CONSULTING ENGINEERS

APPROVED:
CHIEF ENGINEER — ASST. CHIEF ENGINEER

ASST. DIRECTORS OF PUBLIC WORKS
DIRECTOR OF PUBLIC WORKS

DESIGNED BY: M. B. J.
DRAWN BY: MRO
CHECKED BY: M. B. J.
SCALE: 1" = 20' HORIZ., 1" = 4' VERT.
DATE: Dec., 1973
SHEET 19 OF 200 SHEETS
DRAWING NO. 18045

D-141-277A

SECT.-F

SEE SECT.-B FOR REF.

SECT.-J

SECT.-S

SECT.-P

SECT.-C

DET.-E

SECT.-D

SECT.-B

DETAIL-E

DETAIL-G

SECT.-H

SECT.-K

SECT.-L

SECT.-R

SECT.-M

SECT.-N

J-0

SECT.-M ASBUILT SHOP DRWG.

D-10359 B
D-11301 B

MAT'L.: HRS

HEXTEEL: 3/4" x #14GA.-304SS

FOR GUNITE LINING
SEE DWG. C-D1-11519

W. W. RECORDS
MICROFILM
DATE 6/26/78

JOB NO. 3304-DS

C/N 41277

TITLE 14'-0 CYCLONE #1 (GUNITE LINED)
C.W.
CITY OF HOUSTON, TEXAS

SCALE 1/2-3/4-1/8-2-3	APPR. HJ	DATE	6-14-77
DRAWN L	DATE 6-13-77	CHKD.	
TRACED	DATE	CHKD.	

BERKLEY & HOLMES, INC. Consulting Engineers
☑ NO EXCEPTIONS NOTED
☐ EXCEPTIONS NOTED
RETURN AND RESUBMIT FOR DISTRIBUTION
☐ RETURNED FOR CORRECTION
Review does not relieve contractor of responsibility for conformity with contract requirements, correct details and fit of parts when assembled.
BERKLEY & HOLMES, INC. BY [signature] DATE 5/4/78
CITY OF HOUSTON BY [signature] DATE

THIS DRAWING IS THE PROPERTY OF
COMBUSTION ENGINEERING, INC.
RAYMOND DIV., CHICAGO, ILL.
AND IS NOT TO BE REPRODUCED, OR USED TO FURNISH ANY INFORMATION FOR MAKING OF DRAWINGS OR APPARATUS EXCEPT WHERE PROVIDED FOR BY AGREEMENT WITH SAID COMPANY.

DRAWING NO. D-141-277A-0

DWG. NO. 18045 (SHT. NO. 19 OF)

5	6	7	8
1	2	3	4

H.L. & P Co. 50' R.O.W.

N

MATCH LINE STA. 7+00

7.5 off ℄

Proposed 7' Chain Link Fence

℄ 12" Sanitary Sewer

Prop. 12" Sanitary Sewer

4+99 ℄ Prop. MH. (Type 1)= E 4.61

Existing 10' Shell Drive

1+01± ℄ Prop. MH. (Type 1)= E 0.63

Prop. 12" San. Sewer

0+30 Connect To 12" Stub. Contractor To Field Verify Location Of Stub.

Asphalt Pavement (By Others)

0+00 ℄ Prop. MH. By Others

Proposed 84" Trunk Sewer By Others, Job No. 3292-2 Dwg No. 18766

Fan House

Pumping Station (By Others)

Fan House

Asphalt Pavement (By Others)

4+90 4+00 3+00 2+00 1+00 0+00 5+00 6+00 7+00

Existing Grade

Existing 10' Shell Drive

Proposed Asphalt Pavement (By Others)

PROPOSED 12" SAN. SEWER EXTRA STRENGTH VCP @ 0.25 %

E 41.02

CLASS "A" BEDDING

PROP. 12" SAN. SEWER EXTRA STR. VCP @ 0.25%

PROP 12" DROP E 0+63 E 40.40

TO PROP. 84" SEWER BY OTHERS. E 9.52

1+01 ℄ PROP. MH. (TYPE 1) E 0+63 E 40.65

0+30 CONNECT TO 12" STUB E 40.47

0+00 ℄ PROP. MH. (BY OTHERS)

Existing Grade

PROP. 12" SAN. SEWER EXTRA STR. VCP @ 0.25 %

E 42.15

CLASS "B" BEDDING

4+99 PROP. MH. E 4+61 E 4.65

E 41.63

CITY BENCH MARK

5351

CITY SURVEY MARKER 0116

ELEV. 54.67

JAMES A. BINKLEY 3535 REGISTERED PROFESSIONAL ENGINEER

PAUL R. HOLMES 3535 REGISTERED PROFESSIONAL ENGINEER

CITY OF HOUSTON
DEPARTMENT OF PUBLIC WORKS

ALMEDA SIMS SLUDGE DISPOSAL PLANT - 1973

PLAN & PROFILE
12" SANITARY SEWER

RECOMMENDED FOR APPROVAL:
BINKLEY & HOLMES, INC., CONSULTING ENGINEERS

APPROVED:
CHIEF ENGINEER — ASST. CHIEF ENGINEER

ASST. DIRECTORS OF PUBLIC WORKS

DIRECTOR OF PUBLIC WORKS

DESIGNED BY: M.D.J.
DRAWN BY: I. GONZALEZ
CHECKED BY: M.D.J.
SCALE: 1" = 20' Horiz., 1" = 4' Vert.
DATE: Dec., 1973
SHEET 20 OF 200 SHEETS
DRAWING NO. 18045

REV. NO.	DATE	DESCRIPTION	DESIGN	CHECKED
1	1-1978	REVISED SEWER GRADE AND LOCATION OF STUB CONNECTION	C.L.B	H.J.K

13

D-141-277B

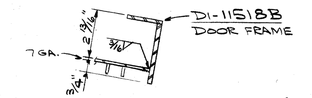

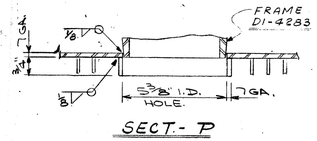

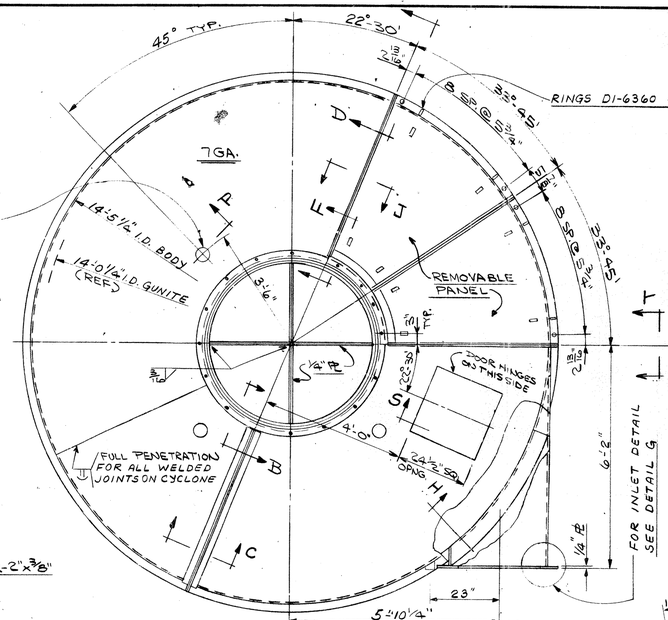

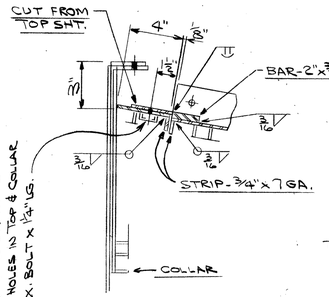

4-⅝" NUT CAPS A-307-200 (ITEM 4) W/ ⅝" SQ. NUTS
4-¾" DIA. HOLES IN TOP & COLLAR
4-⅝" HEX. BOLT x 1¼" LG.

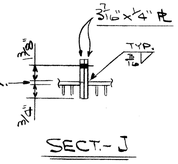

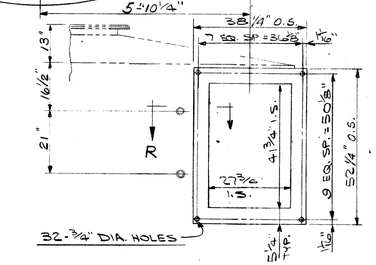

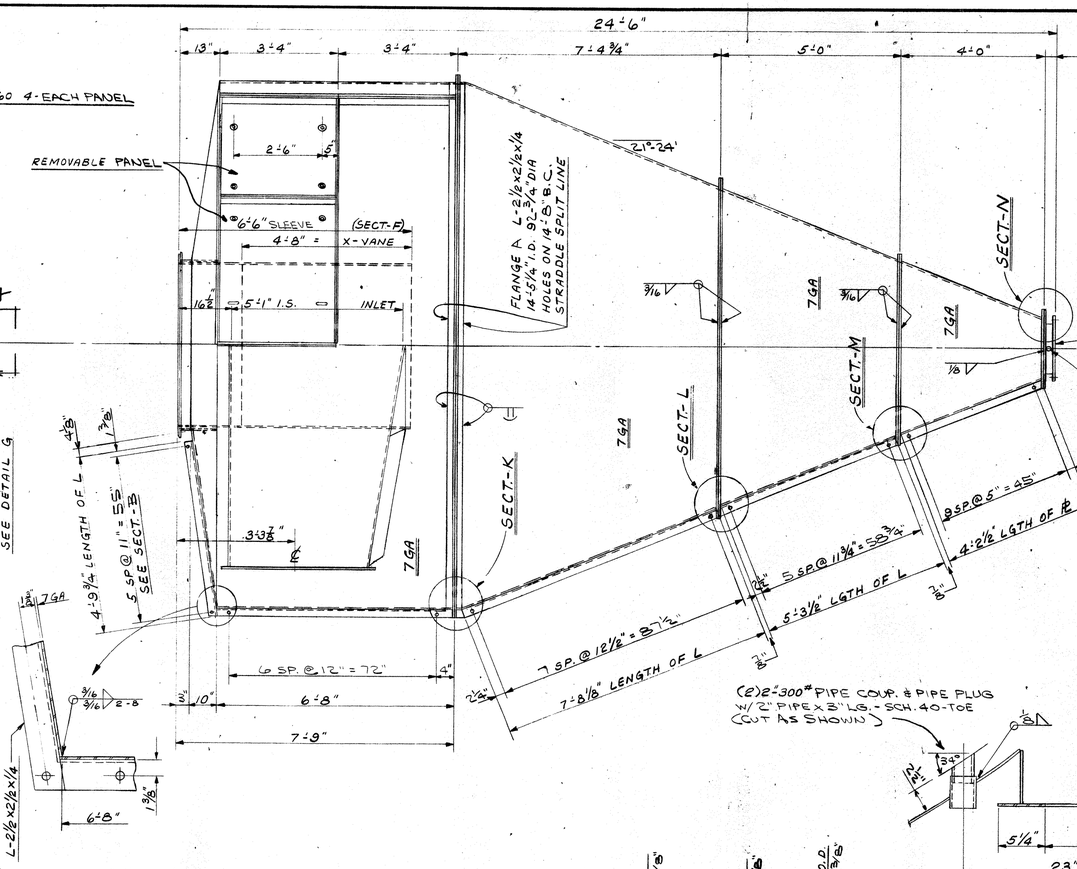

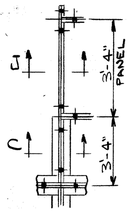

MAT'L.: HRS
HEXTEEL: ¾" x #14GA.- 304SS

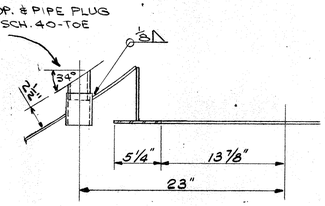

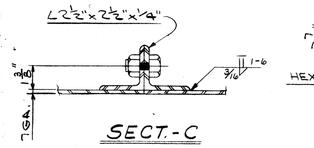

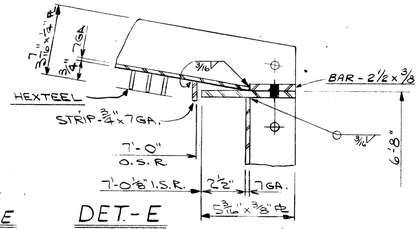

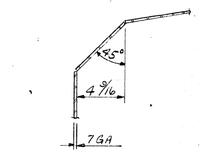

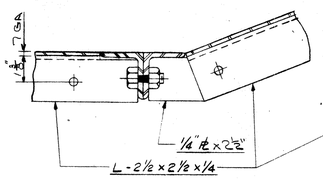

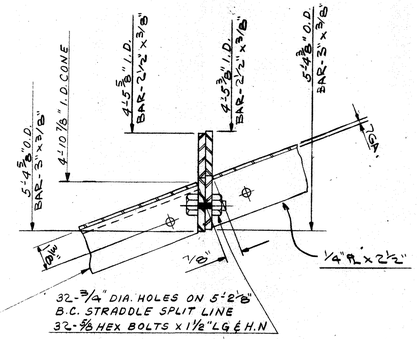

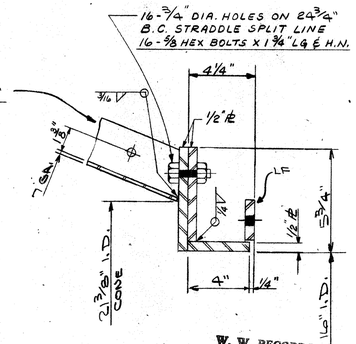

FOR GUNITE LINING SEE DWG. C-DI-11518

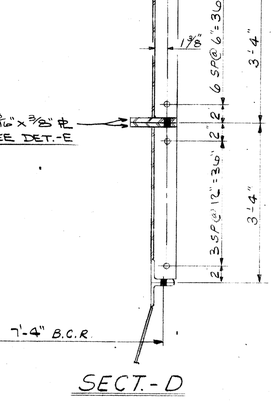

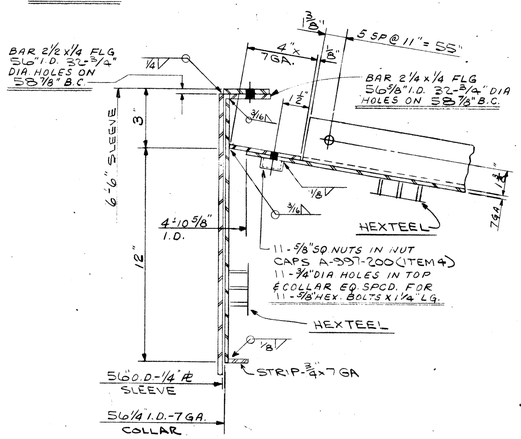

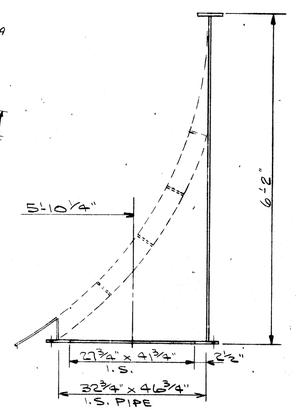

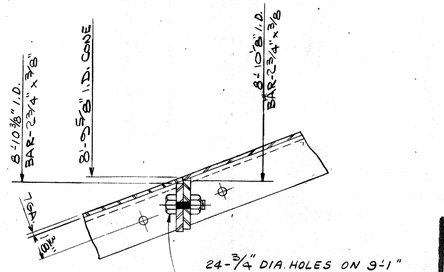

JOB NO. 3304-DS

C/N 41277

TITLE 14'-0" CYCLONE #2 (GUNITE LINED)
C.C.W.
CITY OF HOUSTON, TEXAS

SCALE ½-¾-1½-2-3	APPR. HHJ	DATE 6-14-77	
DRAWN L	DATE 6-12-77	CHKD.	
TRACED	DATE	CHKD.	

THIS DRAWING IS THE PROPERTY OF
COMBUSTION ENGINEERING, INC.
RAYMOND DIV., CHICAGO, ILL.
AND IS NOT TO BE REPRODUCED, OR USED TO FURNISH ANY INFORMATION FOR MAKING OF DRAWINGS OR APPARATUS EXCEPT WHERE PROVIDED FOR BY AGREEMENT WITH SAID COMPANY.

DRAWING NO. D-141-277B-O

HUNTLEY & HOLMES, INC. Consulting Engineers
NO EXCEPTIONS NOTED
EXCEPTIONS NOTED
NOTED AND RESUBMIT FOR DISTRIBUTION
RESUBMIT FOR CORRECTION
Review does not relieve contractor of responsibility for conformity with contract requirements, correct details and fit of parts when assembled.
HUNTLEY & HOLMES, INC. BY N/A DATE 5/4/78
CITY OF HOUSTON BY [illegible] DATE

D-DI-11301A

ASBUILT SHOP DRAWING

5	6	7	8
1	2	3	4

DWG. NO. 18045 (SHT. NO. 20 OF)

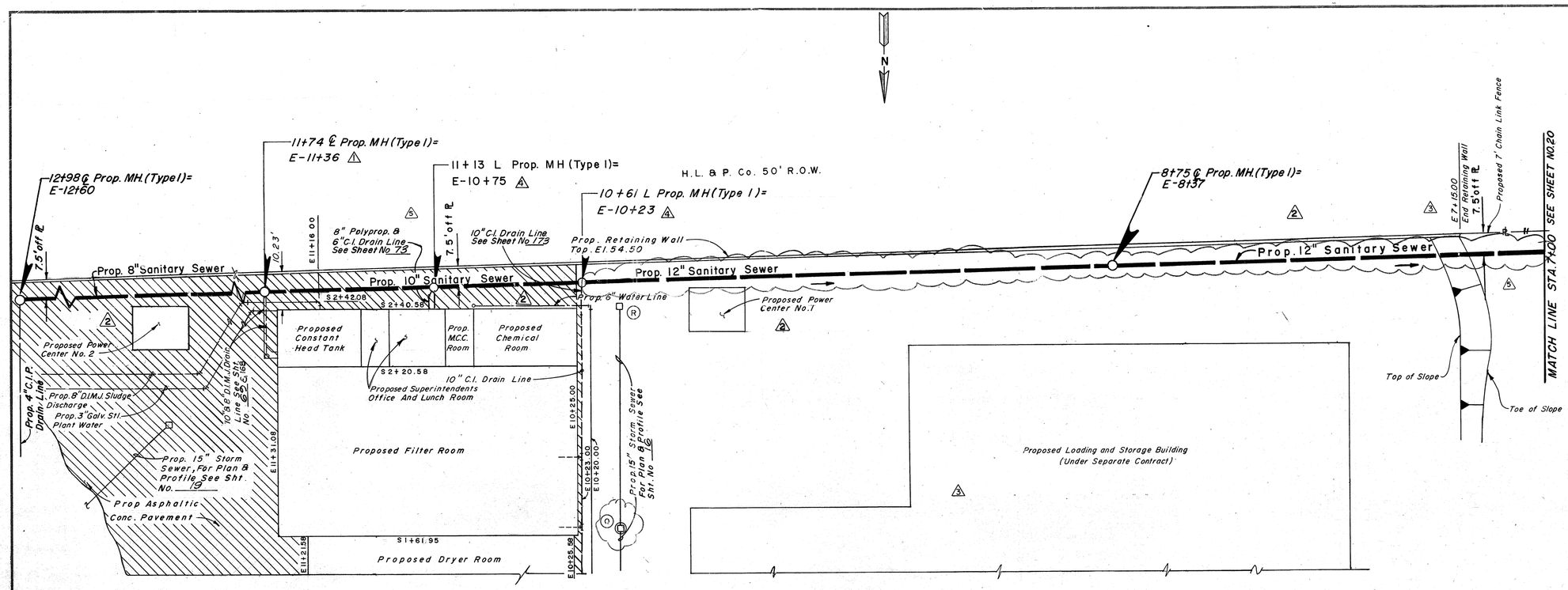

CITY BENCH MARK 5351
CITY SURVEY MARKER 0116
EL. 54.67

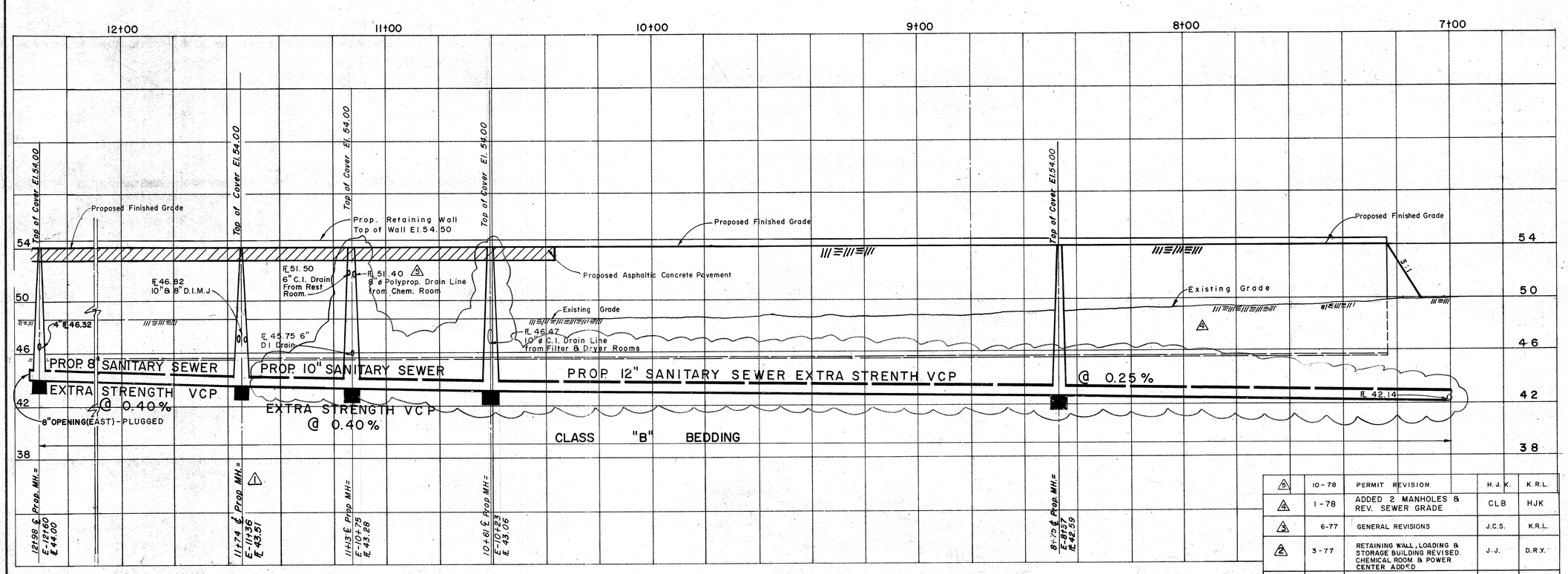

REV. NO.	DATE	DESCRIPTION	DESIGN	CHECKED
5	10-78	PERMIT REVISION	H.J.K.	K.R.L.
4	1-78	ADDED 2 MANHOLES & REV. SEWER GRADE	CLB	HJK
3	6-77	GENERAL REVISIONS	J.C.S.	K.R.L.
2	3-77	RETAINING WALL, LOADING & STORAGE BUILDING REVISED. CHEMICAL ROOM & POWER CENTER ADDED	J.J.	D.R.Y.
1	4-1-1976	RELOCATION OF MANHOLE	J.J.	D.R.Y.

PAUL R. HOLMES 27638 REGISTERED PROFESSIONAL ENGINEER STATE OF TEXAS

JAMES A. BINKLEY 24292 REGISTERED PROFESSIONAL ENGINEER STATE OF TEXAS

CITY OF HOUSTON
DEPARTMENT OF PUBLIC WORKS

ALMEDA SIMS SLUDGE DISPOSAL PLANT — 1973

PLAN & PROFILE
8" SANITARY SEWER

RECOMMENDED FOR APPROVAL:
Paul R. Holmes
BINKLEY & HOLMES, INC., CONSULTING ENGINEERS

APPROVED:
Walter Hillman
CHIEF ENGINEER · ASST. CHIEF ENGINEER

ASST. DIRECTORS OF PUBLIC WORKS
E B Trace
DIRECTOR OF PUBLIC WORKS

DESIGNED BY: M.D.J.
DRAWN BY: I. GONZALEZ
CHECKED BY: M.D.J.
SCALE: 1" = 20' Horiz., 1" = 4' Vert.
DATE: Dec., 1973
SHEET 21 OF 200 SHEETS
DRAWING NO. 18045

D-FD-1900

REVISION 1 — ADD "MILL #1 & 2" & FL. EL. 4-7-78

2-LINERS FD-1593B WITH STUDS

LINER FD-1599C WITH STUDS

WELD RET. RODS TO CASING. WITH CONTINUOUS WELD INCLUDING SECTION WITH BOLTED LINERS

DO NOT WELD

LINER

2- RETAINER RODS FD-1599D

3-LINERS FD-1599A

LINER ARRANGEMENT

12-5/8" HN & LW
6-RETAINER PLATES FD-1599E

28-3/4"-10 SS HEX. CAPSCREWS x 1 1/4" LG. COAT CAPSCREWS WITH ELESCO #100 THREAD LUBRICANT. 1-2 LB. CAN OF LUBRICANT TO BE FURNISHED WITH MILL FOR CUSTOMERS USE

4-5/8" SS HEX. CAPSCREWS x 1 1/2" LG. TO START COVER WHEN OP'NG.

C.W. CASING FD-1764

30°

C.C.W. CASING FD-1763

10-5/8" HN & PW LINERS FD-1762 B&C TO CASING

GUIDE PIN

24-5/8" HN, PW & LW
2-LINERS FD-1762A TO SIDE COVER

MOTOR & BRG. CARRIAGE FD-1099B

COVER SUPPORT FD-1369 WELD TO SIDE COVER IN ASSEM.

5/16 I-3
5/16 I-3

TO PERMIT WITHDRAWING THE ROTOR & CARRIAGE, A FLEXIBLE CONDUIT, RECEPTACLE & PLUG SHOULD BE PROVIDED. (NOT BY CE)

NOTE:- THE MOTOR & CARRIAGE ASSEMBLY WILL BE AS SHOWN FOR BOTH C.C.W. & C.W. CAGE MILLS

30-3/4" DIA. HOLES

1 1/16"
1 3/16"
3'-8 7/8" O.S.
8-EQ. SPC'S. = 3'-6 9/16"
LINER FD-1762C
7-EQ. SPC'S. = 3'-1 3/8"
LINER FD-1762B
2'-11 3/8" I.S.
2'-3"
22 5/8"
OUTLET
2'-6" I.S.
3'-3 1/2"
4 1/4"

DODGE DYNA-V DRIVE
MOTOR SHEAVE - 4 GROOVE 5V
7.1" O.D. WITH #3020 TAPERLOCK BUSHING
2 3/8" BORE 5/8" X 5/16" K.W.
MILL SHEAVE - 4 GROOVE 5V
28.0" O.D. WITH #6040 TAPERLOCK BUSHING
4" BORE 1" X 1/4" K.W. WITH KEY
6-MATCHED 5V-1180 BELTS 29.6" C-C
WESTINGHOUSE MOTOR TEFC
30 H.P. 900 R.P.M. 364T FRAME
MILL SPEED = 218 RPM

DET-A
C.W. ROTOR ASSEM. FD-1602A
FOR MILL ASSEM. FD-1900B

2'-10 3/4"
13/16"
5-EQ. SPC'S. = 2'-9 1/8"
2 1/4"
3-EQ. SPC'S. = 2'-0 1/8"
3"
15 1/2" I.S.
2'-4 3/4" I.S.
16-1/2" HEX. BOLT x 1 1/2" LG.

52 1/2" I.D. x 58 1/2" I.D. FLG.
32-3/4" DIA. HOLES ON 56" B.C.
HOLES TO STRADDLE ℄

3'-6" ℄ BRG. | 16" ℄ BRG. | 2'-10" ℄ MILL | 21 3/8" ℄ INLET

ROTOR MUST BE STATICALLY BALANCED

C.C.W. ROTOR ASSEM. FD-1602B FOR CW ASSEM. - SEE DET-A

INSUL. SIDE COVER FD-1761

10 1/8"
5 1/2"

RADIATION SHIELD FD-1916
SHAFT COVER FD-1067

6-1/2"-13 HEX. CAPSCREW x 3/4" LG. & LW

1/16" SHIMS

10-3/8"-16 HEX. CAPSCREW x 3/4" LG. - LW COVER TO CARRIAGE

NAME PLATE MP-11215

7 1/4"

BELT GUARD FD-1786
GUARD COVER FD-1786A
7-3/8" HEX. BOLT x 3/4" LG. - HN COVER TO GUARD

4-1/2" HEX. BOLT x 1 1/4" LG.

2-3/4" DIA. HEX. BOLTS x 2 1/2" LG. LW & 2-PLAIN WASHERS KEEP BOLTS TIGHT DURING OPERATION OF CAGE MILL.

USE BOLTS HERE WHEN CARRIAGE IS ROLLED BACK

BASE FD-1106

FLOOR EL. 54'-6"

6-3/4" DIA. ANCHOR BOLTS

(4) 5/8" HEX. BOLT x 3" LG. - HN & LW

2'-9 1/2" | 2'-9 1/2"
2'-11 1/8" | 2'-11 1/8"

2-BEARING MP-9575
8-1/2" DIA. HEX. BOLT x 2" LG. - HN & LW

SHAFT 5D-688AK

5'-3" | 5'-3"
6" | 10" | 6"
11'-6"

8-3/4" DIA. HEX. BOLTS x 1 3/4" LG. REMOVE 4 BOLTS EACH SIDE DURING OPERATION OF CAGE MILL. REPLACE & TIGHTEN TO WITHDRAW ROTOR

2-3/4" DIA. HEX. BOLTS x 2 1/4" LG - HN & LW KEEP BOLTS TIGHT DURING OPERATION OF CAGE MILL & REMOVE TO WITHDRAW ROTOR

SHAFT ASSEM. C-FD-1787

4-1/2" HEX. CAPSCREW x 1" LG. - LW

ACCESS DOOR ASSEM. SD-954

CLEANOUT DOOR ASSEM. FD-1209
4-1/2" HEX. CAPSCREW x 1 1/4" LG. - LW

6-3/4" DIA. HEX. BOLTS x 3" LG - HN & LW

3'-7" | 3'-10" | 4'-3" | 10'-0 1/2"

A-0

3/4" GROUT

JOB NO. 3304-DS
RAYMOND DIVISION, CHICAGO, ILL. CONTR. NO. 41277

SECTIONAL ASSEMBLY
FOR # 375-30 CAGE MILL
CITY OF HOUSTON, TEXAS

SCALE 1"=12" DATE 5-27-77
DRAWN BY L CHECKED BY ALS
TRACED BY APPROVED 6-6-77

THIS DRAWING IS THE PROPERTY OF COMBUSTION ENGINEERING, INC. AND IS NOT TO BE REPRODUCED OR USED TO FURNISH ANY INFORMATION FOR MAKING OF DRAWINGS OR APPARATUS EXCEPT WHERE PROVIDED FOR BY AGREEMENT WITH SAID COMPANY

DRAWING NO. D-FD-1900-1

ASBUILT SHOP DRAWING

D-FD-17666

DIETZGEN No. 138-3 AGEPROOF

DWG. NO. 18045 (SHT. NO. 21 OF 27)

BARKLEY & HOLMES, INC. Consulting Engineers
NO EXCEPTIONS TAKEN
EXCEPTIONS NOTED
NOTED AND RESUBMIT FOR DISTRIBUTION
RETURNED FOR CORRECTION
Review does not relieve contractor of responsibility for conformity with contract requirements, correct details and fit of parts when assembled.
BARKLEY & HOLMES, INC. BY ____ DATE 6/2/82
CITY OF HOUSTON BY ____ DATE ____

W. W. RECORDS MICROFILM DATE 6/26/82

MILL #1 - ASSEMBLY FD-1900A - C.C.W. - AS SHOWN (S/N 77030)

MILL #2 - ASSEMBLY FD-1900B - C.W. - OPP. HAND (S/N 77031)

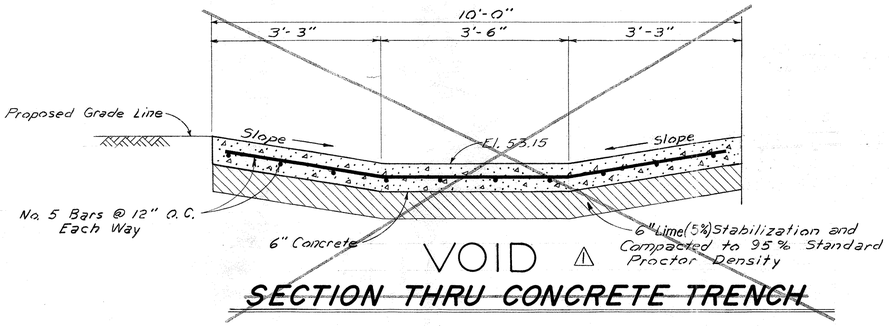

VOID ⚠

SECTION THRU CONCRETE TRENCH

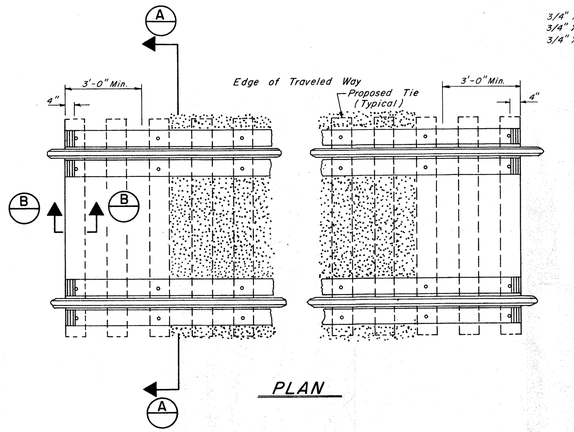

PLAN

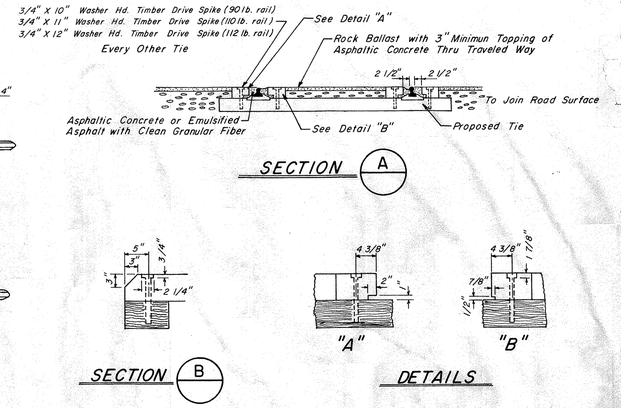

STANDARD RAILROAD CROSSING

NOTE: Railroad Crossing to be built in accordance with Missouri Pacific Standards Page 401.01-E entitled Standard Highway Grade Crossing for Light Vehicular Traffic.

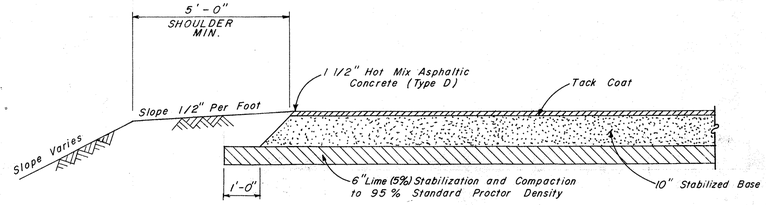

TYPICAL PAVING SECTION

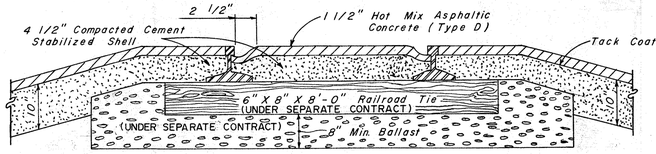

TYPICAL RAILROAD PAVING SECTION

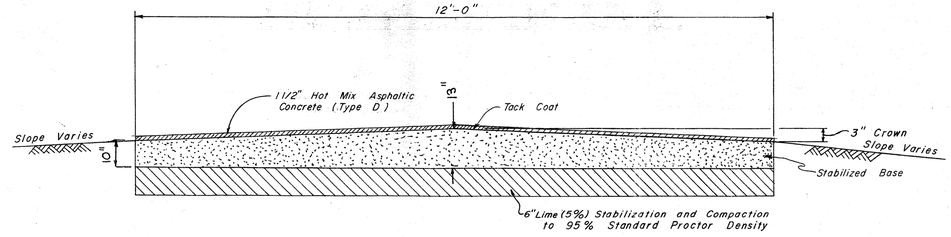

TYPICAL SECTION THRU METERING STATION DRIVEWAY

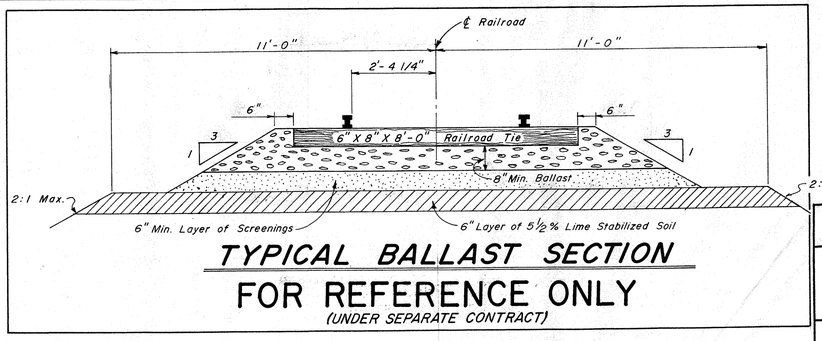

TYPICAL BALLAST SECTION

FOR REFERENCE ONLY

(UNDER SEPARATE CONTRACT)

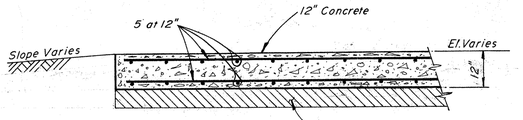

TYPICAL CONCRETE PAVING SECTION

REV. No.	DATE	DESCRIPTION	DESIGN	CHECKED
2	6-77	GENERAL REVISIONS	J.C.S.	K.R.L.
1	3-77	TYPICAL TRENCH SECTION VOIDED, CONC. PAVING SECTION ADDED	J.C.S.	S.R.S.

CITY OF HOUSTON
DEPARTMENT OF PUBLIC WORKS

ALMEDA SIMS
SLUDGE DISPOSAL
PLANT - 1973

PAVING SECTIONS AND DETAILS

RECOMMENDED FOR APPROVAL:
BINKLEY & HOLMES, INC., CONSULTING ENGINEERS

APPROVED:
CHIEF ENGINEER — ASST. CHIEF ENGINEER
ASST. DIRECTORS OF PUBLIC WORKS
DIRECTOR OF PUBLIC WORKS

DESIGNED BY: M. D. J.
DRAWN BY: G. Dorman
CHECKED BY: M. D. J.
SCALE: None
DATE: Dec, 1973
SHEET 22 OF 200 SHEETS
DRAWING NO. 18045

D-FS-905 | REVISIONS

BILL OF MATERIAL

ITEM	QTY.	DESCRIPTION
1	2	PEABODY BURNER, TYPE ML-12, DUAL-FUEL, CAP. 12,000,000 BTU/HR.
2	2	IGNITOR W/ IGNITION TRANSFORMER, TYPE FPM PEABODY
3	2	IGNITION CABLE, PEABODY
4	2	PUSHBUTTON STATION, IGNITION, FIREYE TYPE 51CQ1 MODEL 1006
5	2	SHUT-OFF COCK, 3/4" DE ZURIK #0075, FIG425, S, 1, RS51, FIG483
6	2	FLEXIBLE HOSE, GAS, PEABODY, 3/4"
7	2	HYDRAMOTOR GAS VALVE, 1", GENERAL CONTROLS #H118AF122
8	3	SHUT-OFF COCK, 1", DE ZURIK #0100, FIG425, S, 1, RS51, FIG483
9	1	PILOT GAS PRESSURE REGULATOR, FISHER TYPE 630, 2" NPT
10	1	OIL PUMP SET, PEABODY MODEL LOD-7-300 (SERVES 2 FURNACES)
11	4	PRESSURE GAGE (0-30 PSI) MARSHALLTOWN FIG. NO. 24 (4½" DIAL)
12	1	MAIN GAS PRESSURE REGULATOR, 2", FISHER #298T-EK-61L WITH PILOT & FILTER
13	2	ADJUSTABLE PORT VALVE WITH AIR MOTOR, 2", NORTH AMERICAN #1005 W/ 1600 AIR MOTOR
14	7	SHUT OFF COCK, 2", DE ZURIK #0200, FIG435, S, 1, RS51, FIG483
15	2	SAFETY SHUT-OFF VALVE, 1½", C-E CONTROLS #TV-8080-2 (MAXON)
16	2	SHUT-OFF COCK, 3", DE ZURIK #0300, FIG435, S, 1, RS51, FIG483
17	2	SHUT-OFF COCK, ½", 600 PSI, POWELL FIG. 2612 W.O.G.
18	2	CHECK VALVE, ½" IPS, 600 LB., POWELL #126 W.O.G.
19	2	FLAME SCANNER, FIREYE #45UV-1 MODEL 1020
20	2	SUPERVISORY COCK, 1" IPS, FIREYE #FM4GT
21	3	GAGE COCK, ¼", MARSHALLTOWN FIG. 125
22	2	SAFETY SHUT-OFF VALVE, 1" IPS, MAXON SERIES 730, WITH SPDT SWITCH
23	2	PRESSURE GAGE, OIL, 0-600 PSI, MARSHALLTOWN FIG. 24, 4½" DIAL
24	1	DIFFERENTIAL PRESSURE REDUCING & REGULATING VALVE, 1" IPS, CASHCO 1000 HP-6+1
25	3	PLUG VALVE, 3/4", ROCKWELL-NORDSTROM FIG. 2024
26	3	LOW FIRE COCK, ¼", 3-WAY, 2-PORT W/ WRENCH RAYMOND PART NO. FA-2000
27	6	OIL SHUT-OFF VALVE, 1" IPS, ROCKWELL-NORDSTROM FIG. 2024
28	2	NEEDLE VALVE, ¼" IPS, MARSHALLTOWN FIG. 200
29	1	OIL CONTROL VALVE, 3/4", NORTH AMERICAN #1005 W/ #1600 AIR MOTOR
30	1	GLOBE VALVE, ¼", POWELL FIG. 171
31	1	GLOBE VALVE, ½" POWELL FIG. 171
32	2	HEAT INSULATING NIPPLE, FIREYE # 35-127
33	2	BLACK IRON NIPPLE STD. WT. 2" LG. WITH BLACK IRON STD. WT. COUPLING 1" I.P.S.

ALL ITEMS SHOWN ARE FOR ONE FURNACE UNIT, EXCEPT FOR ITEM 10, CONTRACT CALLS FOR (2) TWO FURNACE UNITS, DRAWING SHOWS (1) ONE UNIT.

REFERENCE DWGS.:

CONTROL WIRING DIAGRAM — D-FS-905A
CONTROL PANEL ARRANGEMENT — D-FS-905C
SCHEMATIC CONTROL DIAGRAM — D-FS-905B
CONTROL PANEL BILL OF MATERIAL — D-FS-905D

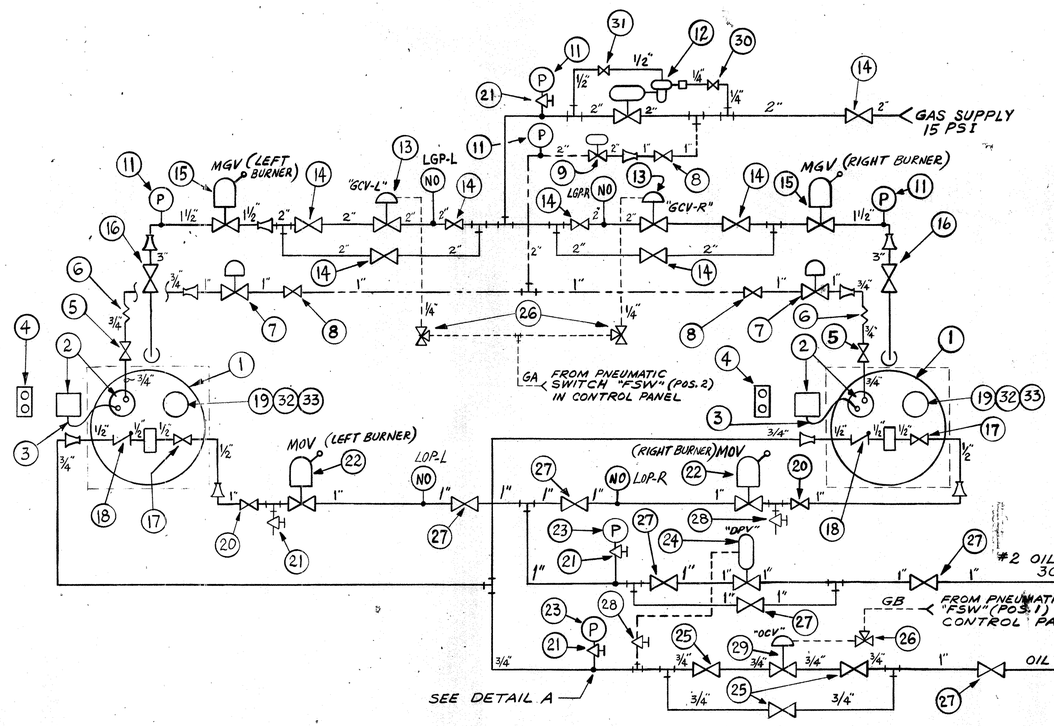

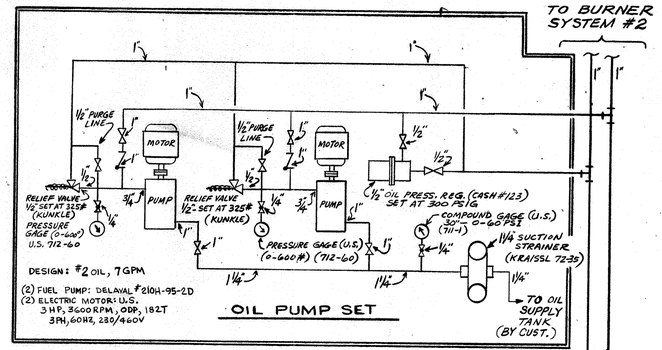

Note:
Install all pressure gauges (4½" Dial) for convenient observation from operating floor. (Floor El. 66.83)

NOTE:
LOCATE TAP ON TOP OR SIDE OF PIPE PARALLEL TO VALVE SHAFT WITH UNDISTURBED STRAIGHT RUNS *UPSTREAM AND DOWNSTREAM.

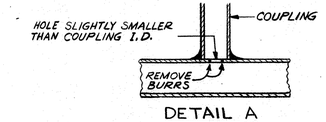

DETAIL A

INSTALLATION OF PRESSURE TAPS
*MINIMUM 5 PIPE DIAMETERS UPSTREAM
MINIMUM 2 PIPE DIAMETERS DOWNSTREAM

THIS IS A SCHEMATIC DWG, NOT A PIPING DWG. REFER TO VENDOR CATALOGS AND INDUSTRY STANDARDS FOR PROPER INSTALLATION OF PIPING AND COMPONENTS. PRESSURES AND TEMPERATURES ARE PER PROPOSAL AND CONTRACT.

PIPING NOTE:

PIPING LAYOUT AND SIZING AS SHOWN ON THIS DRAWING IS BASED ON MINIMUM PIPE LENGTH WITH STRAIGHT RUNS USED WHEREVER POSSIBLE. A MINIMUM AMOUNT OF ELBOWS SHOULD BE USED, USING 90° LONG RADIUS ELBOWS. CLEAN COMMERCIAL STEEL PIPE (NON-GALVANIZED), SHOULD BE USED UTILIZING ASTM SCHEDULE 30 OR 40 IN ALL CASES. ALL MANIFOLDS SHOULD BE CENTER FED.

CAUTION:

EXCESSIVELY LONG PIPE RUNS OR LARGE QUANTITIES OF FITTINGS MAY NECESSITATE INCREASING PIPE SIZES WHERE NECESSARY TO REDUCE LINE PRESSURE LOSSES.

ALL EQUIPMENT AND ITEMS LABELED ARE SUPPLIED BY C-E RAYMOND/ BARTLETT-SNOW/EHRSAM.

ALL PIPE, FITTINGS AND ACTUAL ASSEMBLY OF PIPING SYSTEM TO BURNERS & FROM PUMP SET TO BURNERS ARE BY C-E CONTRACTOR.
ALL PIPING FROM PUMP SET TO TANK ARE BY CUSTOMER'S CONTRACTOR.

W. W. RECORDS MICROFILM DATE 6/16/82

BURNER PIPING KEY

1. ——— MAIN FUEL LINES (GAS, OIL, ETC.)
2. — — — COMBUSTION AIR LINES
3. — — — — PILOT FUEL LINES
4. — - — - IMPULSE LINES
5. WHEN SUPERVISORY AIR IS REQUIRED FOR FM COCK SYSTEMS THE COMBUSTION AIR LINE SYMBOL WILL BE APPLICABLE.
6. ALL PIPING IS SHOWN IN SCHEMATIC FORM. ACTUAL ASSEMBLY ARRANGEMENTS, ROUTING, AND MISCELLANEOUS FITTINGS ARE SUBJECT TO EQUIPMENT LAYOUT AND FIELD CONDITIONS.

ASBUILT SHOP DRAWING

HARRIS & BROWN, INC. Consulting Engineers
NO EXCEPTIONS TAKEN
EXCEPTIONS NOTED
MAKE AND MODIFY AS CORRECTED
RETURNED FOR CORRECTION
Review does not relieve contractor of responsibility for compliance with contract requirements. Contractor shall check all dimensions and quantities.
HARRIS & BROWN, INC. BY [signature] DATE 4/25/78

JOB NO. 3304-DS
SERIAL NO. 77030 & 77031 CONTRACT NO. 41277

BURNER PIPING SCHEMATIC
FOR CITY OF HOUSTON
HOUSTON, TEXAS

SCALE NONE DRAWN BY EGK TRACED BY
DATE 1/6/78 CHECKED BY APPROVED 3/15/78

THIS DRAWING IS THE PROPERTY OF COMBUSTION ENGINEERING, INC. AND IS NOT TO BE REPRODUCED, OR USED TO FURNISH ANY INFORMATION FOR MAKING OF DRAWINGS OR APPARATUS EXCEPT WHERE PROVIDED FOR BY AGREEMENT WITH SAID COMPANY.

DRAWING NO. D-FS-905-0

DWG. NO. 18045 H (SHT. NO. 22 OF)

POST 126-3

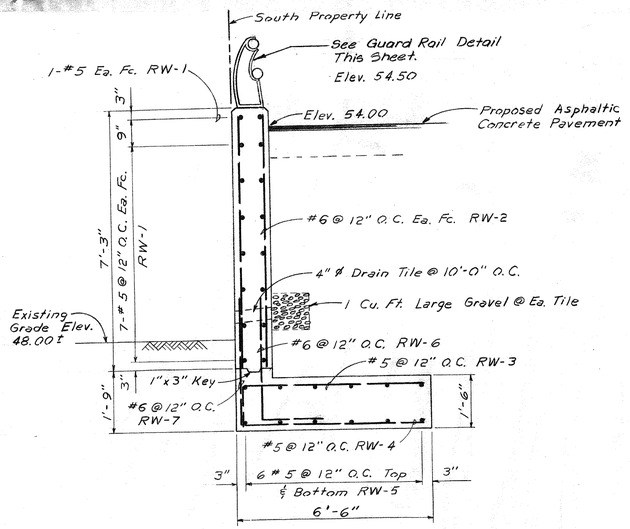

TYPICAL SECTION THRU RETAINING WALL

Scale: 1/2"=1'-0"

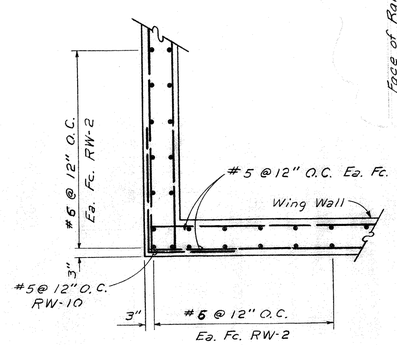

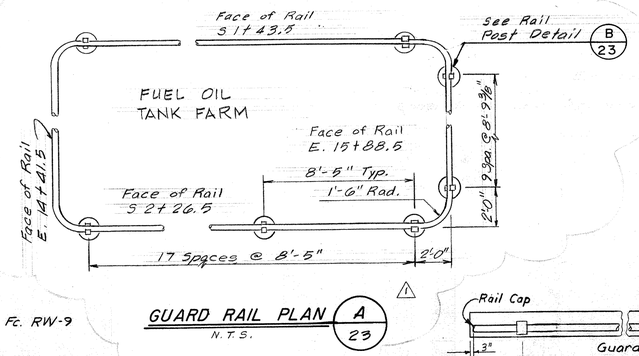

GUARD RAIL PLAN A 23

N.T.S.

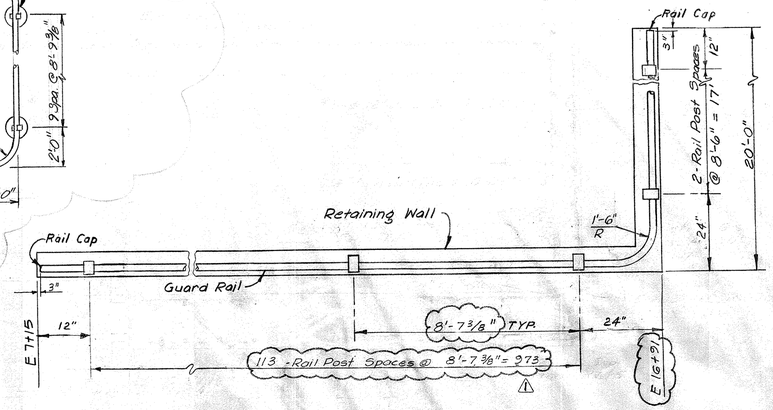

TYPICAL SECTION AT RETAINING WALL CORNER

Scale: 1/2"=1'-0"

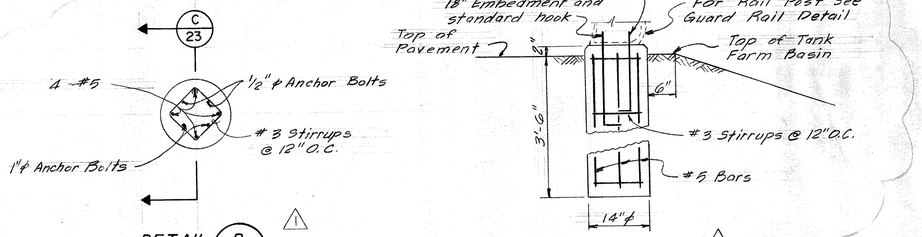

DETAIL B 23

N.T.S.

SECTION C 23

N.T.S.

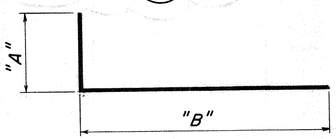

TYPE I BENT BAR DETAIL

N. T. S.

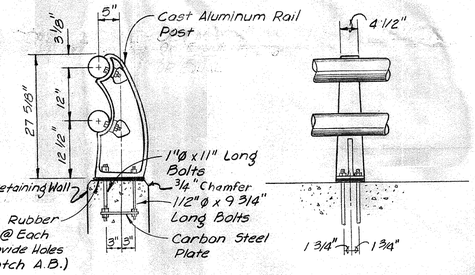

GUARD RAIL DETAIL

Scale: 3/4"=1'-0"

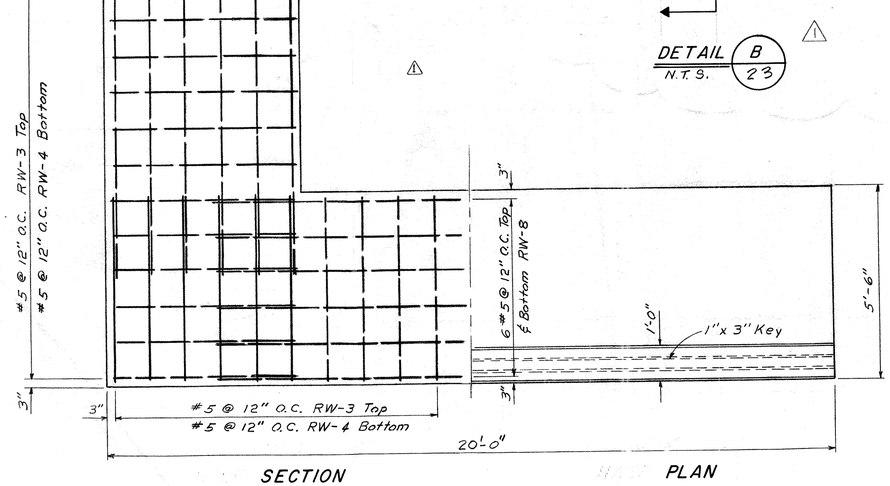

TYPICAL RETAINING WALL WING FOUNDATION DETAIL

Scale: 1/2" = 1'-0"

RETAINING WALL REINFORCING STEEL SCHEDULE

MARK	TYPE	SPACE	SIZE	NO.	LENGTH	A	B
RW-1	STR	12" & 9"	5	128	40'-0"		
RW-2	STR	12"	6	624	7'-0"		
RW-3	I	12"	5	313	7'-0"	1'-0"	6'-0"
RW-4	STR	12"	5	313	6'-0"		
RW-5	STR	12"	5	84	40'-0"		
RW-6	I	12"	6	620	5'-9"	2'-3"	3'-6"
RW-7	STR	12"	6	620	3'-6"		
RW-8	STR	12"	5	24	17'-0"		
RW-9	STR	12"	5	32	20'-0"		
RW-10	I	12"	5	16	5'-6"	2'-9"	2'-9"

NOTE: All Laps 24" Minimum

REV. NO.	DATE	DESCRIPTION	DESIGN	CHECKED
2	11-78	Addenda Revisions Delete Bar Schedule	H.J.K.	K.R.L.
1	10-78	Permit Revision Extended Retaining Wall Added Guard Rail at Fuel Oil Storage Area	H.J.K.	K.R.L.

CITY OF HOUSTON
DEPARTMENT OF PUBLIC WORKS

ALMEDA SIMS
SLUDGE DISPOSAL
PLANT - 1973

RETAINING WALL DETAILS

RECOMMENDED FOR APPROVAL:
BINKLEY & HOLMES, INC., CONSULTING ENGINEERS

APPROVED:
CHIEF ENGINEER
ASST. CHIEF ENGINEER
ASST. DIRECTORS OF PUBLIC WORKS
DIRECTOR OF PUBLIC WORKS

DESIGNED BY: M.D.J.
DRAWN BY: G. DORMAN
CHECKED BY: M.D.J.
SCALE: AS NOTED
DATE: Dec., 1973
SHEET 23 OF 200 SHEETS
DRAWING NO. 18045

D-FS-905A | REVISIONS

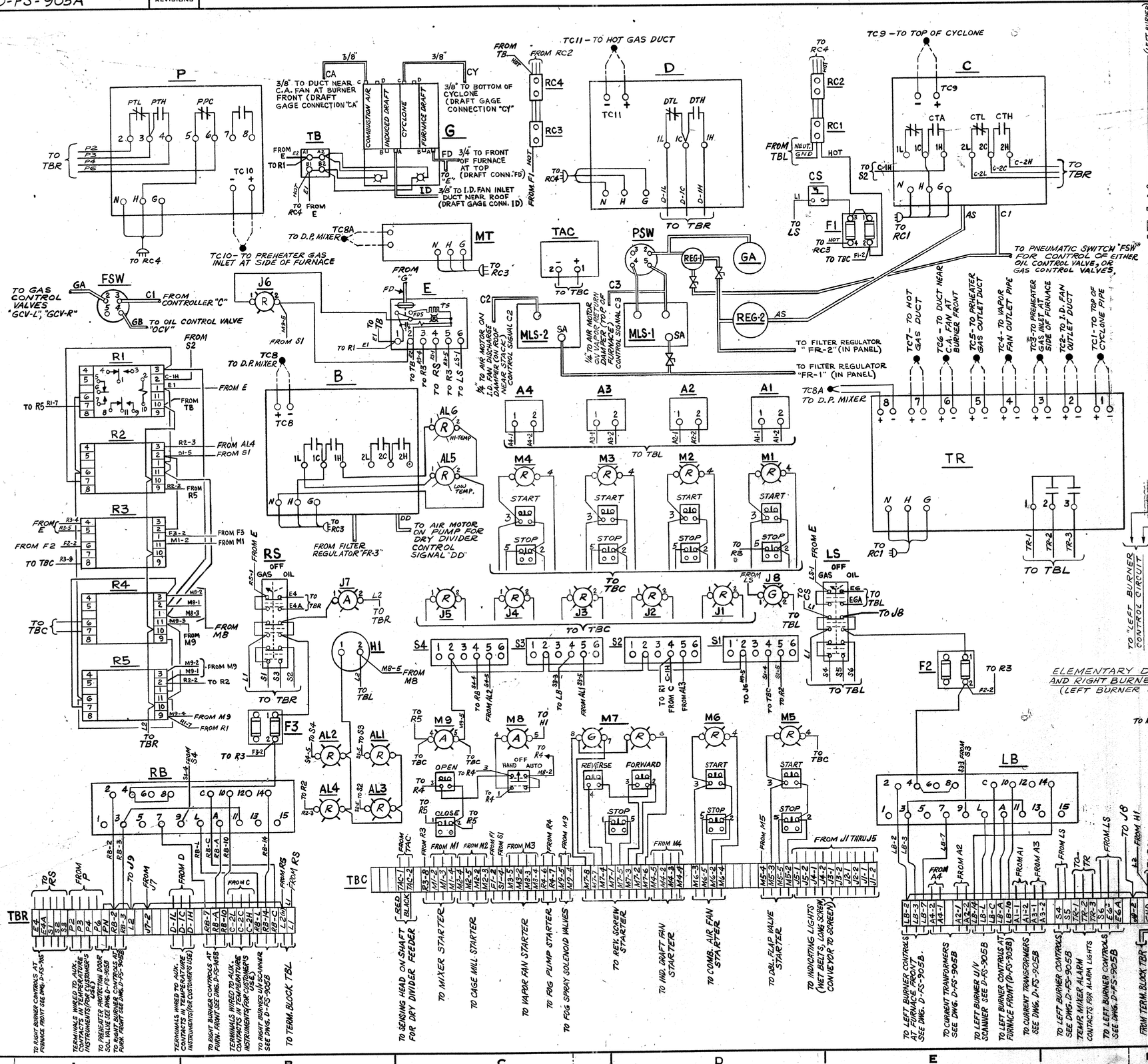

LEGEND (FOR ELEM. DIAG.)

- △ CTA - CYCLONE TEMP. CONTROLLER ALARM CONTACTS.
- EL - IGNITER SPARK ELECTRODE
- △ FDS - FURNACE DRAFT SWITCH.
- FP1 - FOG PUMP #1 MOTOR STARTER COIL.
- FP2 - FOG PUMP #2 MOTOR STARTER COIL.
- △ H1 - ALARM HORN
- △ AL2 - FLAME OUT-RIGHT BURNER ALARM LIGHT.
- △ AL3 - CYCLONE TEMP ALARM LIGHT
- LOP - LOW OIL PRESSURE SWITCH
- IGV - IGNITER SOLENOID VALVE
- ITR - IGNITION TRANSFORMER
- △ LD - LOW DRAFT RELAY (IN FDS ENCLOSURE)
- LFS - LOW FIRE START SWITCH (ON BURNER CONTROL GAS VALVE).
- LGP - LOW GAS PRESSURE SWITCH.
- MGV - MANUAL RESET SAFETY SHUT-OFF VALVE HOLDING COIL.
- MS - MICRO SWITCH IN MANUAL RESET GAS VALVE
- OLS - MOTOR STARTER OVERLOAD RELAY CONTACTS.
- △ PPC - PREHEATER PROTECTION DOOR CONTROL CONTACTS.
- PSV - PREHEATER PROTECTION DOOR SOLENOID VALVE.
- △ R1 - CYCLONE TEMPERATURE AUX. RELAY.
- △ R2 - VAPOR FAN OFF AUXILIARY RELAY. (A)
- △ R3 - VAPOR FAN OFF AUXILIARY RELAY (B).
- △ R4 - FOG PUMP AUXILIARY RELAY.
- △ R5 - SPRAY WATER SOLENOID VALVE RELAY.
- △ RF - FLAME RELAY-FLAME SAFEGUARD CONTROL
- △ RM - MASTER RELAY-FLAME SAFEGUARD CONTROL
- △ S1 - VAPOR FAN OFF ALARM SILENCING RELAY
- △ S2 - CYCLONE TEMPERATURE ALARM SILENCING RELAY
- △ S3 - LEFT BURNER FLAME OUT ALARM SILENCING RELAY.
- △ S4 - RIGHT BURNER FLAME OUT ALARM SILENCING RELAY.
- △ TS - THERMAL TIME DELAY RELAY (IN "FDS" ENCL.)
- VFC - VAPOR FAN MOTOR STARTER AUX. CONTACT
- WS - FOG SPRAY WATER SOLENOID VALVES
- RS - FUEL SELECTION SWITCH (GAS-OFF-OIL)

△ INDICATES ITEMS ON CONTROL PANEL
Ⓡ INDICATING LIGHTS R=RED, G=GREEN, A=AMBER
X NUMBERED TERMINALS ON FIREYE CONTROL CHASSIS.
▫ DEVICE & RELAY SOCKET TERMINALS
⊗ PANEL BOARD FIELD TERMINALS
(— HEAVY) WIRING ON FLAME SAFEGUARD CHASSIS
-- FIELD WIRING

NOTE: ALL FIELD WIRING AND PIPING TO BE FURNISHED AND INSTALLED BY C.E., INC, EXCEPT THAT MARKED THUS ⊗ WHICH IS TO BE FURNISHED & INSTALLED BY OTHERS.

CONTRACT COVERS (2) TWO UNITS, ONE (1) UNIT SHOWN.

JOB NO. 3304-D5

CONTRACT NO. 41277

CONTROL WIRING DIAGRAM
FOR CITY OF HOUSTON
HOUSTON, TEXAS

SCALE ✗
DRAWN BY EGK
TRACED BY
DATE 1-6-78
CHECKED BY
APPROVED

THIS DRAWING IS THE PROPERTY OF COMBUSTION ENGINEERING, INC.
AND IS NOT TO BE REPRODUCED, OR USED TO FURNISH ANY INFORMATION FOR MAKING OF DRAWINGS OR APPARATUS EXCEPT WHERE PROVIDED FOR BY AGREEMENT WITH SAID COMPANY.

DRAWING NO. D-FS-905A-0

HUMBLEY & HOLMES, INC. Consulting Engineers
☐ NO EXCEPTIONS NOTED
☐ EXCEPTIONS NOTED
☐ MAKE AND RESUBMIT FOR RECORD
☐ RETURNED FOR CORRECTION
Review does not relieve contractor of responsibility for conformity with contract requirements, correct details and fit of parts when assembled.
HUMBLEY & HOLMES, INC. BY [signature] DATE 4/25/78
CITY OF HOUSTON BY [signature] DATE 4/26/78

W. W. RECORDS MICROFILM DATE 5/8/82

ASBUILT SHOP DRAWING

DWG. NO. 18045 H (SHT. NO. 23 OF)

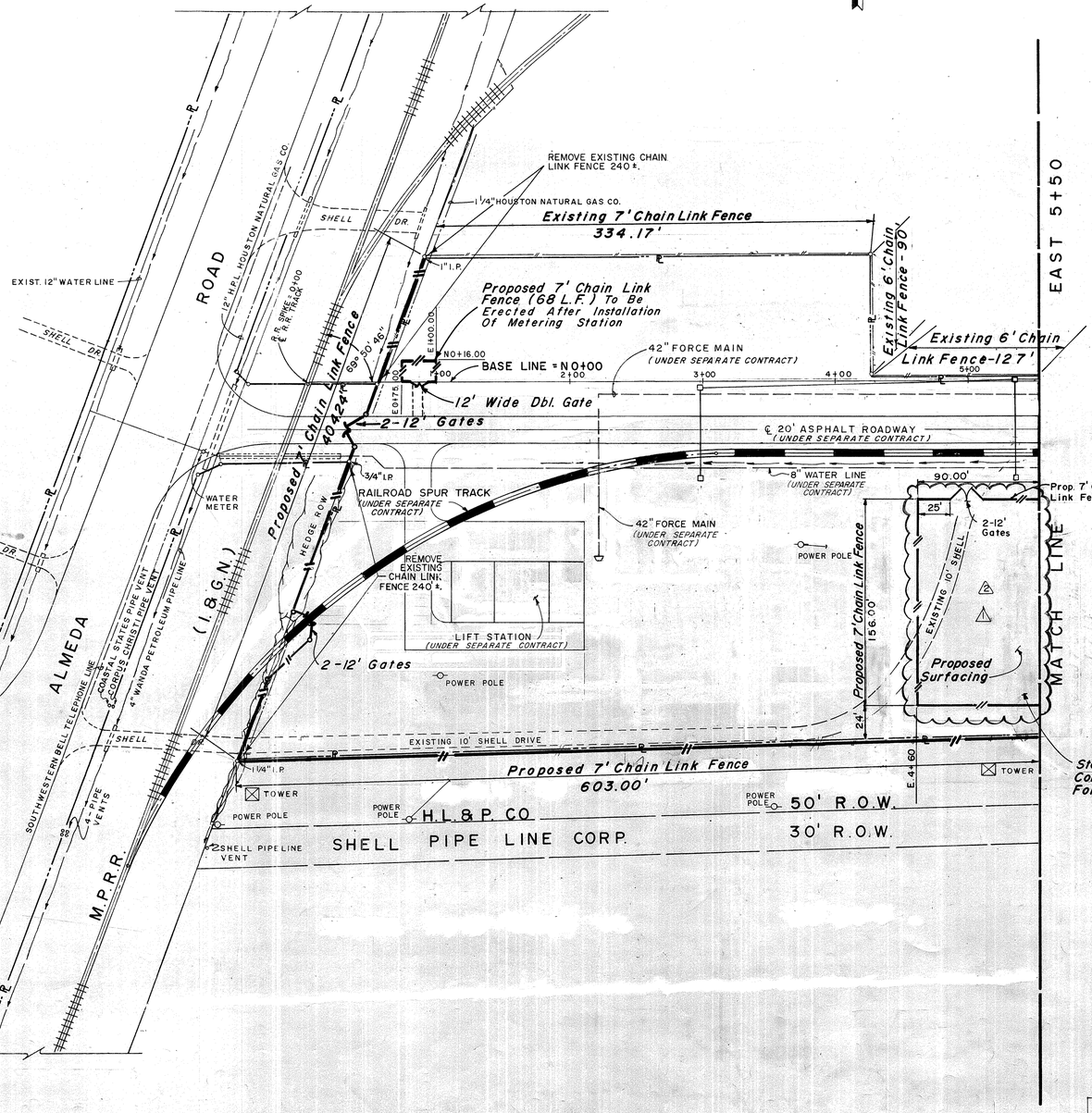

REV. NO.	DATE	DESCRIPTION	DESIGN	CHECKED
2	10-78	PERMIT REVISION REVISED STORAGE AREA	H.J.K	K.R.L.
1	10-77	ADDED STORAGE AREA AND FENCING	K.L.	K.L.

STATE OF TEXAS — PAUL R. HOLMES — 27638 — REGISTERED PROFESSIONAL ENGINEER

STATE OF TEXAS — JAMES A. BINKLEY — NO. 04292 — REGISTERED PROFESSIONAL ENGINEER

CITY OF HOUSTON
DEPARTMENT OF PUBLIC WORKS

ALMEDA SIMS SLUDGE DISPOSAL PLANT – 1973

FENCE PLAN

RECOMMENDED FOR APPROVAL:
BINKLEY & HOLMES, INC., CONSULTING ENGINEERS

APPROVED:
CHIEF ENGINEER — ASST. CHIEF ENGINEER
ASST. DIRECTORS OF PUBLIC WORKS
DIRECTOR OF PUBLIC WORKS

DESIGNED BY: M. B. J.
DRAWN BY: I. GONZALEZ
CHECKED BY: M. B. J.
SCALE: 1" = 50'
DATE: Dec., 1973
SHEET 24 OF 200 SHEETS
DRAWING NO. 18045

D-FS-905B

I.C. LEADWIRE HONEYWELL #5W2P13 (FOR TC9)

M.A. LEADWIRE HONEYWELL #5W2B14 (FOR TC1, TC2, TC3, TC4, TC5, TC6, TC7, TC10, TC11, LEADWIRE HONEYWELL #1W2P4 FOR TC8)

TC1, TC3, TC4, TC7, TC8, TC10 & TC11

T.C. LEADWIRES TO BE RUN DIRECT TO T.C. TERMINALS IN INSTRUMENTS

TC9, TC1, TC2, TC3, TC4, TC5, TC6, TC7, TC8, TC10, TC11

TC5 & TC6

M.A. THERMOCOUPLE HONEYWELL #5A10PA-24'-3H20

CONTROL DAMPER

I.D. FAN, AMERICAN STD. SIZE 37, SERIES 106

MULTI CLONE

AIR MOTOR CONOFLOW B-52SC-1 WITH MODEL 31 POSITIONER (SEE DWG. C-DI-11541A, C-DI-11541B)

I.C. PENCIL TYPE THERMOCOUPLE HONEYWELL #2(3M15G24-3 W/ PROT. TUBE #Y-30071402-18-H

2" IPS FOG SPRAY CONNECTIONS

DRAFT GAGE CONN. SEE DWG. S-34

M.A. THERMOCOUPLE HONEYWELL #5A10PA24-3H20

2" IPS FOG SPRAY CONNECTIONS

VAPOR FAN, AMERICAN STD. SIZE 37, SERIES 106,

14'-0" CYCLONE COLLECTOR

AIR MOTOR, CONOFLOW B-52SC-1 WITH MODEL 31 POSITIONER (SEE DWG. D-DI-11535)

FILTER REGULATOR WITH GAGE CONOFLOW # FH-60XT-KXG-1 (0 TO 60 PSI)

SHUT OFF VALVE, RAY. DI-7996

C.A. FAN, AMERICAN STD. SIZE 193, SERIES 106 CONTROL DAMPER

C.A. PREHEATER

AIR MOTOR CONOFLOW B-52SC-1 WITH MODEL 31 POSITIONER (SEE DWG. S-DI-11521A&B, B-DI-11523)

DRAFT GAGE CONNECTION SEE DWG S-34

CONTROL SIGNAL CONNECTION "DD"

CONTROL SIGNAL CONNECTION "C2"

DRAFT GAGE CONNECTION "I.D."

CONTROL SIGNAL CONNECTION "C1"

CONTROL SIGNAL CONNECTION "GA"

LOW DRAFT SWITCH & DRAFT GAGE CONNECTION "FD"

DRAFT GAGE CONNECTION "CA"

DRAFT GAGE CONNECTION "CY"

CONTROL SIGNAL CONNECTION "GB"

CONTROL SIGNAL CONNECTION "C3"

AIR SUPPLY CONNECTION "AS"

DRAFT GAGE CONN. SEE DWG. S-34

SHUT OFF VALVE, RAY. DI-7996

2" IPS FOG SPRAY CONNS.

VAPOR RETURN DAMPER

OVERFLOW To Product Screw

AIR MOTOR CONOFLOW #B52SC-1 WITH MODEL 31 POSITIONER

PUMP-VICKERS #PVB-10

BURGESS COMPLETE HYDRAULIC POWER UNIT

FILTER REGULATOR W/ GAGE CONOFLOW #FH-60XT-KXG1 (0-60 PSI)

SHUT-OFF VALVE RAY. DI-7996

1" IPS WATER SPRAY CONNECTION

MEGOPAK THERMOCOUPLE HONEYWELL #2T2N15-G10-3 (INPUT TO RECORDER "B" & DIGITAL INDICATOR "MT")

1½" IPS SUPPLY LINE FOR C.M. WATER SPRAY CONNECTIONS.

2" IPS FOG SPRAY CONNECTIONS

CAGE MILL #375-30 (FOR WATER PIPING TO WATER COOLED BEARINGS SEE DWG. S-898B).

TO YRPM SENSOR ON SHAFT OF DRY DIVIDER FEEDER

"TBL"

"TBC"

"TBR"

TO INSTRUMENT AIR SUPPLY 100 PSI SEE DWG. D-DI-11396

PRESSURE GAGE, RAY. PART #FA-601

FILTER REGULATOR RAY. PART # FA-1784

LOW GAS PRESSURE SWITCH MERCOID TYPE DAW-33-3 RANGE 1 TO 35 PSI. (2-REQ'D)

"LOW FIRE COCK" 3 WAY 2 PORT WITH WRENCH HAYS # 7610 RAY. PART #FA-2000

SHUT OFF VALVE RAY. DI-7996

NORTH AM. FIG. 1-10.05 2" PORT VALVE WITH # 1600 AIR MOTOR, # BZE-2RN SWITCH & CONOFLOW "COMMANDAIRE" POSITIONER.

M.A. THERMOCOUPLE HONEYWELL #5A10PA24-3H20

SAFETY SHUT OFF VALVE WITH MICRO SWITCH 1/2" OPTIMUS 20 EY-B080-2 LOCATE ADJACENT TO BURNER

#90-20205 PRESSURE GAGE, MAXON 0 TO 30 PSI

10 RS.I.

MAIN VALVE 3" (DE ZURIK)

BY PASS VALVE 2" (DE ZURIK)

SHUT OFF VALVE 3/4" (DE ZURIK)

3" SHUT OFF VALVE (DE ZURIK)

PRESSURE REGULATOR FISHER #298TEK6IL

PRESSURE GAGE MAXON 0-30PSI

PILOT VALVE

SHUT OFF VALVE 2" (DE ZURIK)

SHUT OFF VALVE 1" (DE ZURIK)

HYDRAMOTOR VALVE GEN. CONT. HIIBAF122.

"IGV"

IGNITION TRANSFORMER "ITR"

"OCV" "MOS" "MOV"

PART OF FUEL SELECTION SWITCH IN CONTROL PANEL

CHECK VALVE

LOW FIRE COCK

OIL RETURN LINE TO SUPPLY TANK

PRESSURE REGULATOR FISHER TYPE 630

SHUT-OFF VALVE DEZURIK 1"

PORT VALVE W/ AIR MOTOR & LOW FIRE SWITCH

"LFS"

GAS LINE SAFETY SHUT-OFF VALVE W/ MICRO-SWITCH (TYPICAL)

PRESSURE GAGE 0-30PSI

3" MAIN VALVE (DEZURIK)

FILTER PRESSURE REGULATOR RAY. PART # FA-1784

"LOW FIRE COCK" 3 WAY, 2 PORT WITH WRENCH HAYS # 7610 RAY. PART NO FA-2000

HYDRAMOTOR VALVE (GAS PILOT LINE)

FIREYE PUSHBUTTON ADJACENT TO BURNER (TYPICAL)

RS

OIL PUMP UNIT

OIL SUPPLY LINE FROM SUPPLY TANK

DIFFERENTIAL PRESSURE REGULATING VALVE

CONDUIT BOX SAFETY SHUT-OFF VALVE W/ MICRO-SWITCH MAXON #730 (TYPICAL)

FILTER REGULATOR WITH GAGE CONOFLOW # FH-60XT-KXG-1 (0-60 PSI)

FILTER REGULATOR WITH GAGE CONOFLOW # FH-60XT-KXG-1 (0-125 PSI)

M.A. THERMOCOUPLE HONEYWELL #5A10PA24-3H20

VARIABLE SPEED HYDRAULIC MOTOR DRY DIVIDER

3 WAY SOLENOID VALVE, GEN. CONTROLS CAT. NO. K3CA1432 — PN "PSV"

AIR MOTOR CONOFLOW B-52SW-1 (SEE DWG. D-SI-1740 & D-SI-1741)

FREEHEATER PROTECTION DOOR

EXACT LOCATION TO BE DETERMINED IN FIELD

M.A. THERMOCOUPLE HONEYWELL #5B10PA24-3H20 DUAL (SEE DWG. D-SI-1696)

M.A. THERMOCOUPLE HONEYWELL #5B10PA24-3H20

TC3, TC7, TC10 & TC11

ELEVATION

THROAT TILE PEABODY

LEFT BURNER

BURNER PEABODY M-12

HEAT INSUL. NIPPLE FIREYE #35-127

U/V SCANNER FIREYE MODEL 45UV1-1020

RIGHT BURNER

THROAT TILE PEABODY

BURNER PEABODY M-12

HEAT INSUL. NIPPLE FIREYE #35-127

U/V SCANNER FIREYE MODEL 45UV1-1020

TO CURRENT TRANSFORMERS IN MOTOR CONTROL CENTER (SEE "TABLE A") MCC #1a FOR UNIT #1 MCC #2A FOR UNIT #2

TO NAT. GAS SUPPLY 15 PSI 30,000 CFH

(LEFT BURNER CONTROL)

115 V., 60 HZ. A.C. SUPPLY L1 #1a FOR UNITS #1 LP #2A FOR UNIT #2

(LEFT BURNER SCANNER)

TO MCC #1 a FOR UNIT # 1 MCC #2A FOR UNIT # 2

TO MCC'S #1A #2A FOR UNITS #1 & 2

TO MCC #1A FOR UNITS #1 & 2

TO MCC #2A FOR UNITS #1 & 2

(RIGHT BURNER CONTROL)

(RIGHT BURNER SCANNER)

AUX. CONTACTS (IN PANEL TEMPERATURE INSTRUMENT) PROVIDED FOR CUSTOMER'S USE.

TO "FOG SPRAY" SOLENOID VALVES (FURNISHED BY OTHERS)

PUSH BUTTON STATION (2-REQ'D) G.E. #CR2940AJ202B FURNISHED BY C.E. INC. (FIELD MOUNTING & WIRING BY OTHERS).

"RUN" "STOP" X1

PRESSURE SWITCH

OIL SWITCH

M

MOTOR STARTER BY OTHERS

PANEL FIELD WIRING & PIPING (SEE NOTE "A")

* INDICATES FIELD WIRING BY OTHERS

CONTROL PANEL (SEE REFERENCE DWGS.)

AIR COMPRESSOR (2 REQ'D) SEE DWG. D-DI-11396

TABLE "A"

(CURRENT TRANSFORMERS)

FURNISHED BY C.E. INC. (FIELD MOUNTING BY OTHERS)

MOTOR	C.T. RATIO	GEN. ELECTRIC CAT. NO. TRANS.	GEN. ELECTRIC CAT. NO. MTG. BRKT.	AMMETER PANEL CIR. NO.
MIXER	100/5	631X27	894456IG1	A1
CAGE MILL	100/5	631X27	894456IG1	A2
VAPOR FAN	300/5	631X30	894456IG1	A3
INDUCED DRAFT FAN	300/5	631X30	894456IG1	A4

REFERENCE DRAWINGS

D-FS-905C — CONTROL PANEL ARRANGEMENT
D-FS-905A — PANEL PIPING & WIRING DIAGRAM
D-FS-905 — ARRANGEMENT OF BURNER PIPING
D-FS-905D — CONTROL PANEL B/M

NOTE "A":- ALL PIPING AND TUBING MUST BE CLEAN AND FREE OF CHIPS BEFORE INSTALLING AND BEFORE FINAL CONNECTION IS MADE.

CONTRACT COVERS TWO (2) UNITS ONE (1) UNIT SHOWN

W. W. RECORDS MICROFILM DATE 8/6/82 JOB NO. 3304-DS

BURNS & ROGERS, INC. Consulting Engineers — NOT RECOMMENDED FOR CONSTRUCTION — REVISED AS NOTED — FOR APPROVAL — FOR CONSTRUCTION — FOR BIDDING PURPOSES — Review does not relieve Contractor of responsibility for conformity with contract requirements, correct details and all of pertinent requirements. BURNS & ROGERS, INC. BY [illegible] DATE 8/6/82

CONTRACT NO. 41277 SERIAL NO. 77030 & 77031

TITLE SCHEMATIC CONTROL DIAGRAM

FOR FLASH DRYING SYSTEM (UNITS #1,2) CITY OF HOUSTON, TEXAS

SCALE	APPR.	DATE 11/6/78
DRAWN EGK	DATE	CHKD.
TRACED	DATE	CHKD.

THIS DRAWING IS THE PROPERTY OF COMBUSTION ENGINEERING, INC. RAYMOND DIV., CHICAGO, ILL. AND IS NOT TO BE REPRODUCED, OR LOANED TO FURNISH ANY INFORMATION FOR MAKING OF DRAWINGS OR APPARATUS EXCEPT WHERE PROVIDED FOR BY AGREEMENT WITH SAID COMPANY.

DRAWING NO. D-FS-905B-0

ASBUILT SHOP DRAWING

DWG. NO. 18045 (SHT. NO. 2-4 OF)

E5+00 E6+00 E7+00 E8+00 E9+00 E10+00 E11+00 E12+00 E13+00 E14+00 E15+00 E16+00 E17+00 E18+00

N5+00 N4+00 N3+00 N2+00 N1+00 0+00 S1+00 S2+00 S3+00 S4+00 S5+00

N

Existing 7' Chain Link Fence 328.0'

Proposed 7' Chain Link Fence 307.0'

Existing 7' Chain Link Fence 419.0'

TYPE "F" INLET (UNDER SEPARATE CONTRACT)

24" STORM SEWER (UNDER SEPARATE CONTRACT)

42" FORCE MAIN (UNDER SEPARATE CONTRACT)

TYPE "F" INLET (UNDER SEPARATE CONTRACT)

EXISTING FENCE

30" STORM SEWER (UNDER SEPARATE CONTRACT)

TYPE "C" M.H. w/ "F" INLET TOP (UNDER SEPARATE CONTRACT)

EXISTING 7' CHAIN LINK FENCE

24" STORM SEWER (UNDER SEPARATE CONTRACT)

TYPE "F" INLET (UNDER SEPARATE CONTRACT)

30" STORM SEWER (UNDER SEPARATE CONTRACT)

20' SHELL ROADWAY (UNDER SEPARATE CONTRACT)

AERATION TANKS (UNDER SEPARATE CONTRACT)

6+00 7+00 8+00 9+00 10+00 11+00 12+00 13+00 14+00 15+00 16+00 17+00 18+00

BASE LINE = N 0+00

67' 24" STORM SEWER (UNDER SEPARATE CONTRACT)

℄ 20' ASPHALT ROADWAY (UNDER SEPARATE CONTRACT)

PROPOSED FUEL OIL UNLOADING FACILITIES

COMPRESSOR BUILDING (UNDER SEPARATE CONTRACT)

Railroad Spur Tracks (Under Separate Contracts)

PROP. FUEL OIL DAY TANK

PROPOSED FERRIC CHLORIDE STORAGE TANKS TRUCK RAMP

PROPOSED SCREENING FACILITY

PROPOSED WAS PUMP AD

TYPE 'C' M.H. (UNDER SEPARATE CONTRACT)

42" STORM SEWER (UNDER SEPARATE CONTRACT)

PROP. FILTRATE SEAL PIT

PROPOSED DRYER ROOM

PROP. AIR LIFT BLOWER PAD

PROP. PUMP CONTROL BUILDING

PROPOSED SLUDGE THICKENER TANK

TYPE "C" M.H. (UNDER SEPARATE CONTRACT)

48" STORM SEWER (UNDER SEPARATE CONTRACT)

Prop. 7' Chain Link Fence

153.18'

Storage Area Fence To Be Completed Within 30 Days, Following Notice To Proceed

PROPOSED LOADING & STORAGE BUILDING (UNDER SEPARATE CONTRACT)

PROPOSED CHEMICAL ROOM

PROPOSED FILTER ROOM

PROPOSED MCC ROOM

PROPOSED POWER CENTER No.2

PROPOSED ASPHALTIC CONCRETE PAVEMENT

PROPOSED SLUDGE PUMP PAD

PROPOSED POWER CENTER No.1

PROPOSED CONSTANT HEAD TANK

EXIST TOWER

PROPOSED SUPERINTENDENT'S OFFICE AND LUNCH ROOM

PROPOSED FUEL OIL STORAGE TANKS

EXIST TOWER

7' CHAIN LINK FENCE (UNDER SEPARATE CONTRACT)

E 16+9

MATCH LINE EAST 5+50

Proposed 7' Chain Link Fence 165'

E 7+15

Proposed Retaining Wall W/Guard Rail

See Sheet No. 23

H.L. & P. CO. 50' R.O.W.

SHELL PIPE LINE CORP. 30' R.O.W.

REV. NO.	DATE	DESCRIPTION	DESIGN	CHECKED
4	10-78	PERMIT REVISION EXTENDED RETAINING WALL AND DELETED FENCING	H.J.K.	K.R.L.
3	6-77	REVISED RETAINING WALL	J.C.S	K.R.L.
2	3-77	GENERAL MODIFICATIONS & ADDITIONS	J.C.S	S.R.S.
1	4-76	DELETED LIFT STA. & BLOWER PAD	J.J.	D.R.Y.

CITY OF HOUSTON
DEPARTMENT OF PUBLIC WORKS

ALMEDA SIMS SLUDGE DISPOSAL PLANT - 1973

FENCE PLAN

RECOMMENDED FOR APPROVAL:
Earl R. Holmes
BINKLEY & HOLMES, INC., CONSULTING ENGINEERS

APPROVED:
Walter Williams
CHIEF ENGINEER — ASST. CHIEF ENGINEER

ASST. DIRECTORS OF PUBLIC WORKS

E B Cape
DIRECTOR OF PUBLIC WORKS

DESIGNED BY: M. D. J. & H.R.E.
DRAWN BY: T. YRIGOYEN & G. DORMAN
CHECKED BY: M. D. J. & H.R.E.
SCALE: 1" = 50'
DATE: Dec., 1973
SHEET 25 OF 200 SHEETS
DRAWING NO. 18045

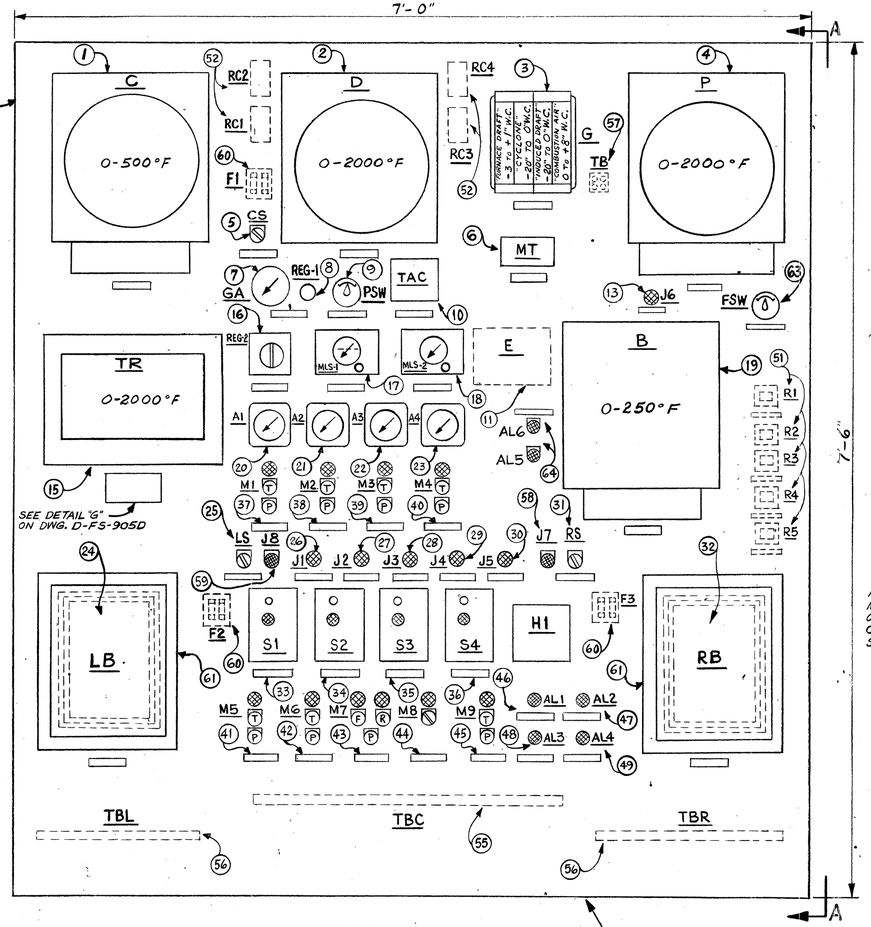

FRONT VIEW
INSTRUMENTS

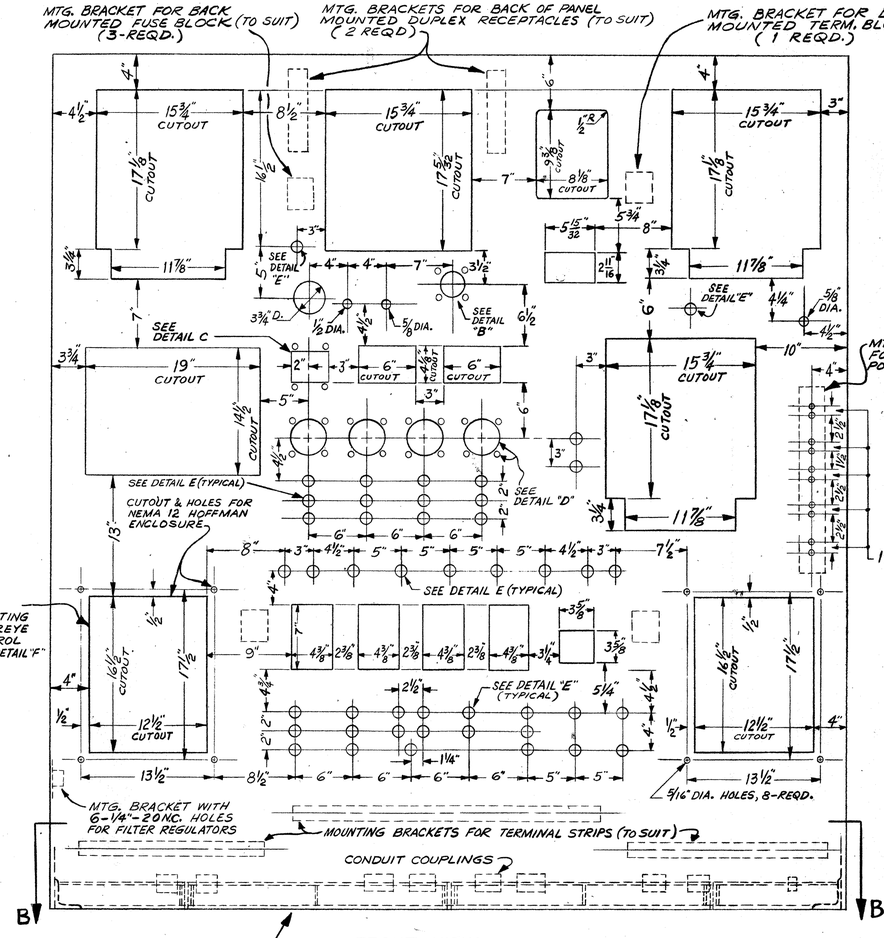

FRONT VIEW
CUTOUTS

NOTE: ENCLOSURE TO BE REINFORCED SUFFICIENTLY TO INSURE A RIGID PANEL WITHOUT PERCEIVABLE DEFLECTION.

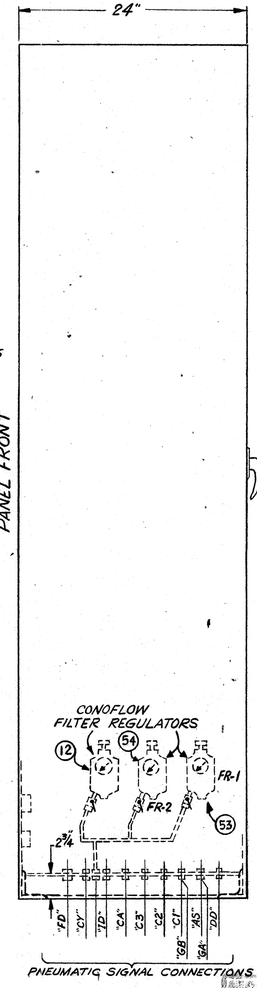

SECTION A-A

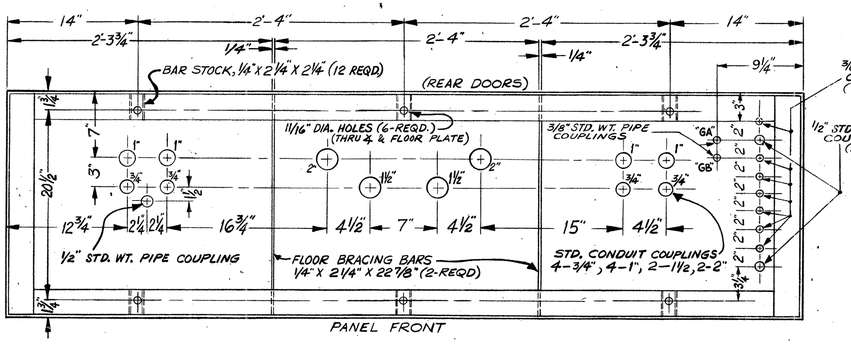

SECTION B-B

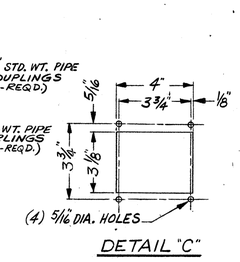

DETAIL "C"

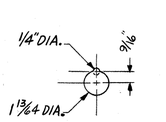

DETAIL "E"
(45) REQD.

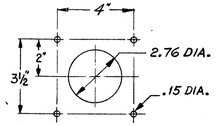

DETAIL "B"

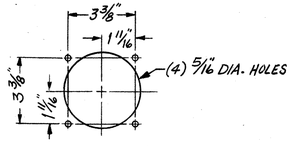

DETAIL "D"

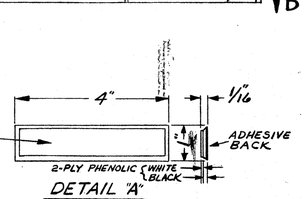

DETAIL "A"

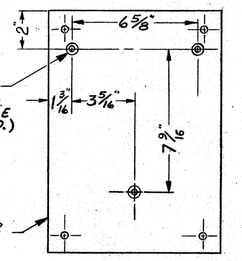

DETAIL "F"

W. W. RECORDS MICROFILM DATE 6/26/82

REFERENCE DWGS:
CONTROL PANEL B/M – D-FS-905D
CONTROL WIRING DIAG. – D-FS-905A
BURNER PIPING SCHEMATIC – D-FS-905
SCHEMATIC CONTROL DIAG. – D-FS-905B

ASBUILT SHOP DRAWING

BAILEY & HOLMES, INC. Consulting Engineers
☐ EXCEPTIONS NOTED
☐ EXCEPTIONS NOTED
☐ AS NOTED AND AMENDED FOR EXCEPTIONS
☐ SUBMITTED FOR CONSTRUCTION
Review does not relieve contractor of responsibility for compliance with contract requirements, correct dimensions and for proper fabrication.
BAILEY & HOLMES, INC. BY [signature] DATE 11/25/82

CONTRACT COVERS TWO (2) UNITS ONE (1) UNIT SHOWN.

JOB NO. 3304-DS
SERIAL NO. 77030 & 77031 CONTRACT NO. 41277

CONTROL PANEL LAYOUT
FOR CITY OF HOUSTON
HOUSTON, TEXAS

SCALE 1½"=1'-0" DATE 1/6/78
DRAWN BY EGK CHECKED BY
TRACED BY APPROVED

THIS DRAWING IS THE PROPERTY OF COMBUSTION ENGINEERING, INC.
AND IS NOT TO BE REPRODUCED, OR USED TO FURNISH ANY INFORMATION FOR MAKING OF DRAWINGS OR APPARATUS EXCEPT WHERE PROVIDED FOR BY AGREEMENT WITH SAID COMPANY.

DRAWING NO. D-FS-905C-0

DWG. NO. 18045 H (SHT. NO. 2 OF)

POST 126-3

D-FS-905D

REVISIONS

BILL OF MATERIAL

ITEM	DESIG.	QTY.	DESCRIPTION & NAMEPLATE ENGRAVING	
1	C	1	RECORDING PNEUMATIC CONTROLLER, HONEYWELL #15201216-01-43-2-093-024-00 WITH OPTIONS NO: 062, 082, 168, 064, 049, 160, 144. NAMEPLATE: CYCLONE TEMPERATURE CONTROL.	
2	D	1	ELECTRONIK INDICATING RECORDER, HONEYWELL #15201816-01-43-2-000-024-00 WITH OPTIONS NO: 168, 081, 062, 064. NAMEPLATE: DRYER INLET TEMPERATURE.	
3	G	1	DRAFT GAUGE 4-POINT, BAILEY TYPE PGAOS MODEL L126, L225, H135. NAMEPLATE: DRAFT GAUGE.	
4	P	1	ELECTRONIK INDICATING CONTROLLER, HONEYWELL #15601316-01-43-2-033 WITH OPTIONS NO: 064, 168 NAMEPLATE: DEODORIZING TEMPERATURE CONTROL	
5	CS	1	TWO-POSITION SELECTOR SWITCH, G.E. #CR2940UB202A WITH LEGEND PLATE #NP118406D (OFF-ON) NAMEPLATE: INSTRUMENTS	*
6	MT	1	DIGITAL TEMPERATURE INDICATOR, DORIC MODEL 400A, RANGE DESIGNATOR K (TYPE K WIRING) NAMEPLATE: "MIXER TEMPERATURE"	
7	GA	1	SINGLE RECEIVER GAUGE, MOORE # 3189-51, 3 1/2" DIAL, RANGE 3-15 PSI NAMEPLATE: VAPOR DAMPER CONTROL - SIGNAL BIAS	
8	REG-1	1	BIASING REGULATOR, MOORE MODEL 681 NULLMATIC M/F TYPE, INPUT 3-15 PSI, SUPPLY MINIMUM 3 PSI ABOVE OUTPUT, BIAS ADJUSTMENT +16 TO -12 PSI, NAMEPLATE: SAME AS ITEM 7 ABOVE.	
9	PSW	1	TWO POSITION PNEUMATIC SWITCH, "AUTOMATIC - MANUAL", HONEYWELL #SP-401A1004 NAMEPLATE: VAPOR DAMPER CONTROL SELECTOR	
10	TAC	1	TACHOMETER FOR DRY DIVIDER FEEDER SPEED, ELECTRO SENSORS ROTACH MODEL H5001T, 0-5000 RPM. NAMEPLATE: DRY DIVIDER FEEDER SPEED	
11	E	1	LOW DRAFT SWITCH, CLEVELAND MODEL AFS952	
12	FR-3	1	FILTER REGULATOR WITH GAGE, RANGE 0-60 PSI, CONOFLOW MODEL FH-60XT-KXG1 (FOR TEMP. CONTROLLER "B")	
13	J6	1	INDICATING LIGHT, RED LENS, G.E. #CR2940UC212B2 NAMEPLATE: LOW FURNACE DRAFT	*
14	ENCL	1	ENCLOSURE PER PANEL SPECIFICATION NOTE #1.	*
15	TR	1	ELECTRONIK MULTI-POINT STRIP CHART RECORDER, HONEYWELL #Y15303826-08-43-2-000-002-11 WITH OPTIONS 062, 064, 168, "082" BLK. FINISH, NAMEPLATE: +1 PURPLE - CYCLONE, +2 RED - STACK, +3 BLACK - DEOD. PREH. GAS INLET, +4 BLUE-VAPOR FAN OUTLET, +5 GREEN - DEOD. PREH. GAS OUTLET, +6 BROWN - COMBUSTION AIR, +7 PURPLE - DRYER INLET, +8 BLUE - MIXER	
16	REG-2	1	PRESSURE REGULATOR, HONEYWELL # 30352920 NAMEPLATE: PRESSURE REGULATOR	
17	MLS-1	1	MANUAL LOADING STATION, HONEYWELL #53102-21-70, SINGLE POINT NAMEPLATE: VAPOR DAMPER - MANUAL STATION	
18	MLS-2	1	MANUAL LOADING STATION, HONEYWELL #53102-12-70, DUAL POINT NAMEPLATE: INDUCED DRAFT DAMPER - MANUAL STATION	
19	B	1	DRY DIVIDER TEMPERATURE RECORDER-CONTROLLER, HONEYWELL #15201216-01-43-1-093-024-00 WITH OPTIONS: 062, 082, 168, 064, 049, 160, 144. NAMEPLATE: "DRY DIVIDER TEMPERATURE CONTROL"	
20	A1	1	AMMETER - MIXER, G.E. #50-103131-LSPK, TYPE AB-40 A.C., 0 TO 100 AMP SCALE RANGE NAMEPLATE: MIXER	
21	A2	1	AMMETER - CAGE MILL, G.E. # SAME AS ABOVE NAMEPLATE: CAGE MILL	
22	A3	1	AMMETER - VAPOR FAN, G.E. #50-103131-LSRX, TYPE AB-40 A.C., 0 TO 300 AMP SCALE RANGE NAMEPLATE: VAPOR FAN	
23	A4	1	AMMETER - INDUCED DRAFT FAN, G.E. # SAME AS ABOVE NAMEPLATE: INDUCED DRAFT FAN	
24, 32	LB, RB	2	ELECTRONIC FLAME CONTROL RELAY, FIREYE #25SU5 MODEL 1Q11C WITH MOUNTING FRAME FIREYE #60-1287-5, NAMEPLATES: RIGHT BURNER ; LEFT BURNER	
25	LS	1	FUEL SELECTOR SWITCH "OIL-OFF-GAS" LEFT BURNER, G.E. #CR2940UB203B (2NO-2NC CONTACTS) WITH LEGEND #NP-118582B, NAMEPLATE: FUEL SELECTION LEFT BURNER	*
26-30	J1-J5	5	INDICATING LIGHT, RED LENS, G.E. #CR2940UC212B2, NAMEPLATES: (J1) "CONVEYOR A", (J2) "CONVEYOR B", (J3) "CONVEYOR E AND F", (J4) "CONVEYOR C", (J5) "CONVEYOR D"	*
31	RS	1	FUEL SELECTOR SWITCH "OIL-OFF-GAS" RIGHT BURNER, G.E. #CR2940UB203B (2NO-2NC CONTACTS) WITH LEGEND #NP-118582B, NAMEPLATE: FUEL SELECTION RIGHT BURNER.	*
33-36	S1-S4	4	ALARM SILENCER, HONEYWELL #R4155A-1044 WITH AMBER LENS. NAMEPLATES: (S1) "VAPOR FAN OFF", (S2) "CYCLONE TEMPERATURE", (S3) "LEFT BURNER", (S4) "RIGHT BURNER"	
37 THRU 42	M1 THRU M6	6	INDICATING LIGHT, RED LENS, G.E. #CR2940UC212B2, PUSHBUTTON G.E. #CR2940UA202B WITH "START" LEGEND PLATE #118025C, PUSHBUTTON G.E. #CR2940UA202C WITH "STOP" LEGEND PLATE #118025D. NAMEPLATES: (M1) "MIXER", (M2) "CAGE MILL", (M3) "VAPOR FAN", (M4) "INDUCED DRAFT FAN", (M5) "DOUBLE FLAP VALVE", (M6) "COMBUSTION AIR FAN"	*
43	M7	1	INDICATING LIGHTS (2 REQD) RED & GREEN LENS, GE. #CR2940UC212C2 & CR2940UC212B2, PUSHBUTTON (3 REQD) G.E. #CR2940UA202B WITH "FORWARD" LEGEND PLATE #118070A & "REVERSE" LEGEND PLATE #118070B & "STOP" LEGEND PLATE #118025D. NAMEPLATE "CONVEYOR S1" (FOR DRYER #1), "CONVEYOR S2" (FOR DRYER #2)	*
45	M9	1	INDICATING LIGHT, AMBER LENS, G.E. #CR2940UC212D2, PUSHBUTTON G.E. #CR2940UA202B WITH LEGEND PLATE "OPEN" #118148C, PUSHBUTTON G.E. #CR2940UA202C WITH LEGEND PLATE #118428B "CLOSE"	*
46 THRU 49	AL1, 2 3, 4	4	INDICATING LIGHT, RED LENS, G.E. #CR2940UC212B2, NAMEPLATES: (AL1) "LEFT BURNER", (AL2) "VAPOR FAN OFF", (AL3) "RIGHT BURNER", (AL4) "CYCLONE TEMPERATURE"	*
50	H1	1	ALARM HORN, RONAN MODEL 350F, FLUSH MOUNTED, 120V./60HZ.	*
51	R1,2,3,4,5	5	CONTROL RELAYS, POTTER-BRUMFIELD #KAP14AG, 3PDT PLUG-IN TYPE, 120V/60HZ., A.C.	*
52	RC1,2,3,4	4	DUPLEX POLARIZED RECEPTACLE (125V, 15A.) WITH HANDY BOX & COVER & (6) SIX CORDS WITH POLARIZED PLUGS.	*
53	FR-1	1	FILTER REGULATOR WITH GAGE, RANGE 0-125 PSI, CONOFLOW MODEL FH-60XT-KXG1 (FOR MANUAL LOADING STATION)	
54	FR-2	1	FILTER REGULATOR WITH GAGE, RANGE 0-60 PSI, CONOFLOW MODEL FH-60XT-KXG1 (FOR BIAS CONTROL STATION)	
55	TBC	1	60-POINT TERMINAL BLOCK, #8-32 SCREW TERMINALS (G.E. TYPE CR151A2 OR EQUAL)	*
56	TBR & TBL	2	32-POINT TERMINAL BLOCK, #8-32 SCREW TERMINALS (G.E. TYPE CR151A2 OR EQUAL)	*
57	TB	1	2-POINT TERMINAL BLOCK, #8-32 SCREW TERMINALS (G.E. TYPE CR151A2 OR EQUAL)	*
58	J7	1	INDICATING LIGHT (2-REQD) AMBER LENS, G.E. #CR2940UC212D2 WITH LEGEND PLATE G.E. #118582B MARKED "RIGHT BURNER ON"	*
59	J8	1	INDICATING LIGHT (2-REQD) GREEN LENS, G.E. #CR2940UC212C2 WITH LEGEND PLATE G.E. #118582B MARKED "LEFT BURNER ON"	*

BILL OF MATERIAL

ITEM	DESIG.	QTY.	DESCRIPTION & NAMEPLATE ENGRAVING	
60	F1, F2, F3	6	CARTRIDGE FUSE, 15 AMP, ECONOMY TYPE ERN15 (OR EQUAL)	*
61	LB RB	2	NEMA 12 ENCLOSURE, HOFFMAN #A-161206FMLP WITH PANEL (13"x9") #A16P12 FOR MOUNTING OF FIREYE FLAME RELAY.	*
62	PB	2	PUSHBUTTON STATION, G.E. #CR2940AJ202B "RUN" & "STOP" (FOR FIELD MOUNTING & WIRING BY CUST., FOR CONTROL OF AIR COMPRESSOR ON INSTRUMENT AIR SUPPLY)	*
63	FSW	1	PNEUMATIC TWO-POSITION SWITCH, HONEYWELL #SP401A1004, POSITION 1 - OIL, POSITION 2 - GAS, NAMEPLATE: (LINE 1) "FUEL SELECTION"; (LINE 2) "OIL GAS".	
44	M8	1	INDICATING LIGHT, RED LENS, G.E. #CR2940UC212B2, SELECTOR SWITCH G.E. #CR2940US203B (2NO, 2NC) SPRING RETURN FROM LEFT, 3-POSITION WITH LEGEND PLATE #NP-130099A "HAND-OFF-AUTO", W/ NAMEPLATE: "FOG PUMP"	
64	AL5 AL6	2	INDICATING LIGHT RED LENS, G.E. #CR2940UC212B2 WITH LEGEND PLATE #NP-118583A "LOW" FOR AL5 & "HIGH" FOR AL6, NAMEPLATE: MIXER TEMPERATURE	

PANEL SPECIFICATIONS:

1. ENCLOSURE: NEMA 12 WELDED CONSTRUCTION, 1/8" H.R. STEEL CABINET #11 GAUGE, FLUSH CHANNELED, 3 GASKETED REAR DOORS WITH THREE POINT LATCHES. FRONT PANEL REINFORCEMENT WHERE REQUIRED.
2. PAINTING: INTERIOR AND EXTERIOR SURFACES TO BE PRIMED. EXTERIOR, TWO FINISHING COATS OF ASA BLACK SATIN GLOSS. INTERIOR, ONE FINISHING COAT OF ASA NO. 61 LIGHT GREY.
3. WIRING: OPEN PANEL BOARD TYPE TO CONFORM WITH NEMA STANDARDS. WIRE TO BE #14 AWG - 7 STRAND GEN. ELECTRIC TYPE SIS 600V INSULATION. PREINSULATED WIRE TERMINALS. INSULATING BUSHINGS AT ALL OPENINGS WHERE WIRES ENTER ENCLOSURES.
4. PIPING BETWEEN COMPONENTS IN PANEL TO BE 1/4" O.D. (EXCEPT WHERE 1/2" O.D. IS NOTED), .035" WALL COPPER TUBING WITH FLARED FITTINGS. TUBES & FIELD PIPING CONNECTION TO BE TAGGED.
5. DEVICE NAMEPLATES ON FRONT OF PANEL TO BE PER DETAIL "A", EXCEPT N.P. #15 TO BE PER C-E DWG. B-D-11391 DEVICE LABELS WITHIN CABINET TO BE PLASTIC ADHESIVE TAPE PLACED SO THAT DEVICE CAN BE REPLACED WITHOUT HAVING TO REMARK.
6. TERMINAL BLOCKS WILL HAVE EACH POINT IDENTIFIED INDELIBLY.
7. BOTH ENDS OF WIRES TO BE TAGGED WITH PRINTED PLASTIC ADHESIVE BACKED WRAP AROUND MARKERS.
8. * - INDICATES EQUIPMENT FURNISHED BY CONTROL PANEL FABRICATOR, ALL OTHER EQUIPMENT FURNISHED BY C-E RAYMOND.

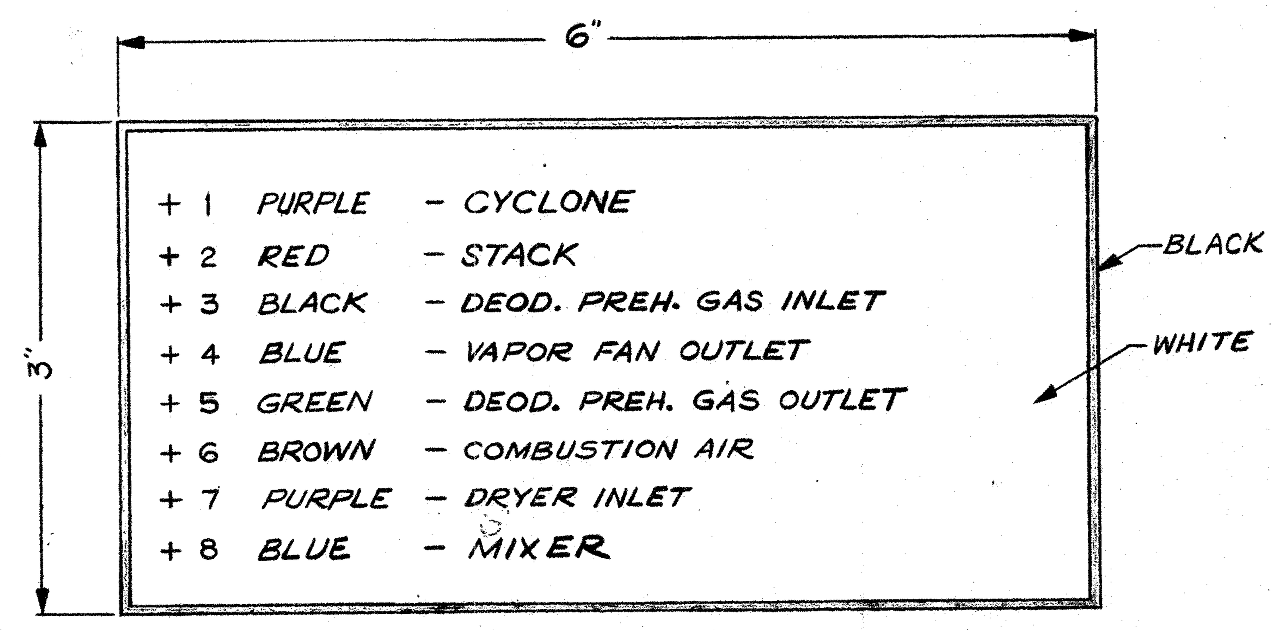

DETAIL "G"

NAMEPLATE FOR TEMP. RECORDER "TR", MATERIAL 2-PLY PHENOLIC, 1/16" THICK - WHITE FACE - BLACK CORE, ADHESIVE BACK, 3/16" HIGH LETTERS WITH 1/8" SPACING BETWEEN LINES.

ASBUILT SHOP DRAWING

W. W. RECORDS MICROFILM DATE 6/26/82

CONTRACT COVERS (2) TWO UNITS, ONE (1) UNIT SHOWN.

JOB NO. 3304-DS

CONTRACT NO. 41277

CONTROL PANEL - BILL OF MATERIAL

FOR CITY OF HOUSTON

HOUSTON, TEXAS

SCALE ✗ DATE 1/6/78
DRAWN BY EGK CHECKED BY
TRACED BY APPROVED DED 3/15/78

THIS DRAWING IS THE PROPERTY OF COMBUSTION ENGINEERING, INC. AND IS NOT TO BE REPRODUCED, OR USED TO FURNISH ANY INFORMATION FOR MAKING OF DRAWINGS OR APPARATUS EXCEPT WHERE PROVIDED FOR BY AGREEMENT WITH SAID COMPANY.

DRAWING NO. D-FS-905D-0

DWG. NO. 18045 (SHT. NO. 26 OF)

POST 126-3

E5+00 E6+00 E7+00 E8+00 E9+00 E10+00 E11+00 E12+00 E13+00 E14+00 E15+00 E16+00 E17+00 E18+00

N5+00 N4+00 N3+00 N2+00 N1+00 0+00 S1+00 S2+00 S3+00 S4+00 S5+00

N

MATCH LINE EAST 5+50

TYPE "F" INLET (UNDER SEPARATE CONTRACT)
24" STORM SEWER (UNDER SEPARATE CONTRACT)
42" FORCE MAIN (UNDER SEPARATE CONTRACT)
TYPE "F" INLET (UNDER SEPARATE CONTRACT)
EXISTING FENCE
30" STORM SEWER (UNDER SEPARATE CONTRACT)
TYPE "C" M.H W/"F" INLET TOP (UNDER SEPARATE CONTRACT)
EXISTING 7' CHAIN LINK FENCE
24" STORM SEWER (UNDER SEPARATE CONTRACT)
℄ 20' ASPHALT ROADWAY (UNDER SEPARATE CONTRACT)
RAILROAD SPUR TRACK NO.1 (UNDER SEPARATE CONTRACT)
PROP FUEL OIL DAY TANK
RAILROAD SPUR TRACK NO.2 (UNDER SEPARATE CONTRACT)
PROPOSED FERRIC CHLORIDE STORAGE TANKS TRUCK RAMP
PROPOSED SCREENING FACILITY
PROPOSED CONCRETE PAYMENT
PROPOSED FUEL OIL UNLOADING FACILITIES
PROPOSED WAS PUMP PAD
PROPOSED LOADING & STORAGE BUILDING (UNDER SEPARATE CONTRACT)
PROPOSED DRYER ROOM
PROPOSED FILTER ROOM
PROPOSED CHEMICAL ROOM
PROPOSED MCC ROOM
PROPOSED ASPHALTIC CONCRETE PAVEMENT
PROPOSED POWER CENTER No.2
PROPOSED SLUDGE PUMP PAD
PROPOSED SLUDGE THICKENER TANK
SEE NOTE 1 FOR SURF. TRT.
TYPE 'C' M.H. (UNDER SEPARATE CONTRACT)
COMPRESSOR BUILDING (UNDER SEPARATE CONTRACT)
42" STORM SEWER (UNDER SEPARATE CONTRACT)
TYPE "C" M.H. (UNDER SEPARATE CONTRACT)
48" STORM SEWER (UNDER SEPARATE CONTRACT)
PROPOSED POWER CENTER No.1
PROPOSED CONSTANT HEAD TANK
PROPOSED RETAINING WALL
EXIST TOWER
PROPOSED SUPERINTENDENT'S OFFICE AND LUNCH ROOM
PROPOSED FUEL OIL STORAGE TANKS
EXIST TOWER
7' CHAIN LINK FENCE (UNDER SEPARATE CONTRACT)
AERATION TANKS (UNDER SEPARATE CONTRACT)
20' SHELL ROADWAY (UNDER SEPARATE CONTRACT)
BASE LINE = N 0+00
42" FORCE MAIN (UNDER SEPARATE CONTRACT)
H.L. & P. CO. 50' R.O.W.
SHELL PIPE LINE CORP. 30' R.O.W.

LEGEND
LIMITS OF SEEDING

REV. NO.	DATE	DESCRIPTION	DESIGN	CHECKED
4	10-78	PERMIT REVISION REMOVED SEEDING	H.J.K.	K.R.L.
3	6-77	GENERAL REVISIONS	J.C.S.	K.R.L.
2	3-77	GENERAL REVISIONS	J.C.S.	S.R.S.
1	4-76	DELETED LIFT STA. & BLOWER PAD	J.J.	D.R.Y.

CITY OF HOUSTON
DEPARTMENT OF PUBLIC WORKS

ALMEDA SIMS
SLUDGE DISPOSAL
PLANT- 1973

LANDSCAPING PLAN

RECOMMENDED FOR APPROVAL:
Paul R. Holmes
BINKLEY & HOLMES, INC., CONSULTING ENGINEERS

APPROVED:
Walter Williams
CHIEF ENGINEER ASST. CHIEF ENGINEER
ASST. DIRECTORS OF PUBLIC WORKS
E.S. Bear
DIRECTOR OF PUBLIC WORKS

DESIGNED BY: M.D.T., HRE
DRAWN BY: T. YRIGOYEN & G. DORMAN
CHECKED BY: M.D.J., HRE
SCALE: 1" = 50'
DATE: Dec., 1973
SHEET 27 OF 200 SHEETS
DRAWING NO. 18045

E-51-1699	REVISION	1	ADD C/N 41277 NOTE 4-7-78

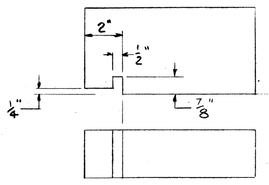

BRICK DETAIL
CUT FROM 9X4½X2½" STRAIGHTS IN FIELD. 450 REQ'D. PER FURNACE

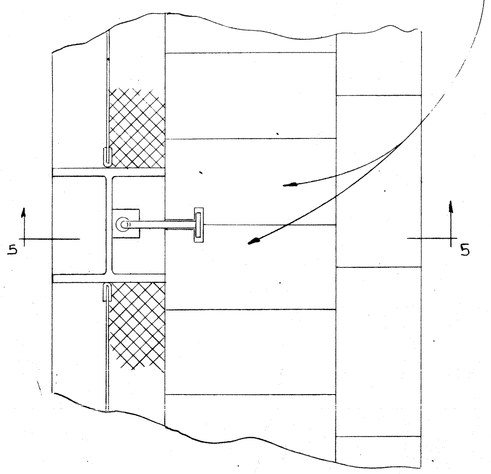

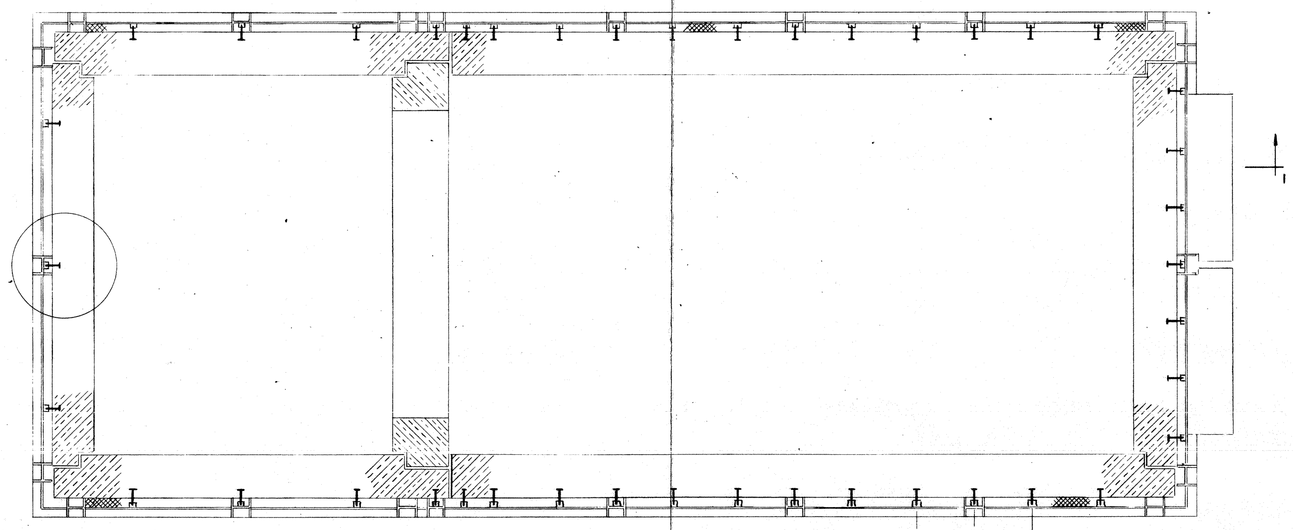

SECTION 4-4

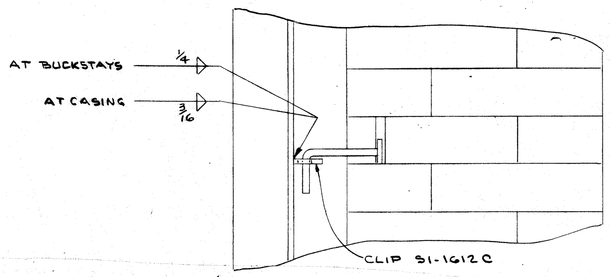

SECTION 5-5

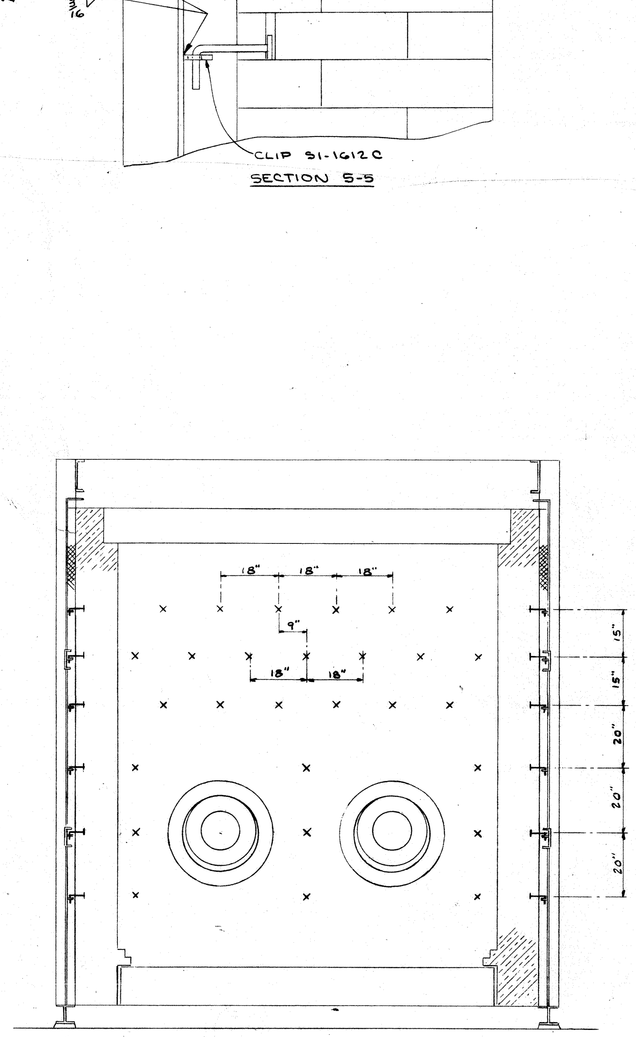

SECTION 2-2

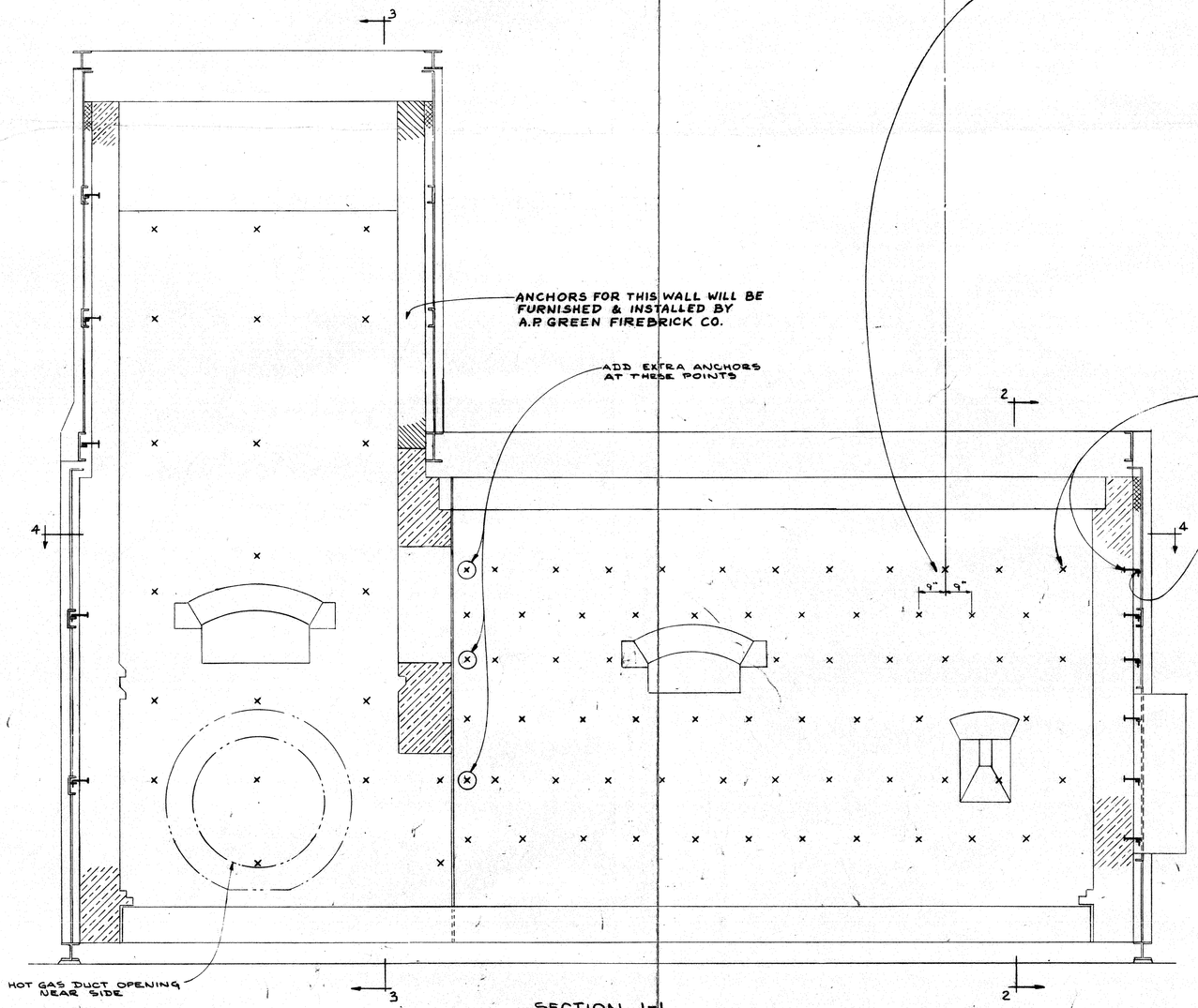

SECTION 1-1

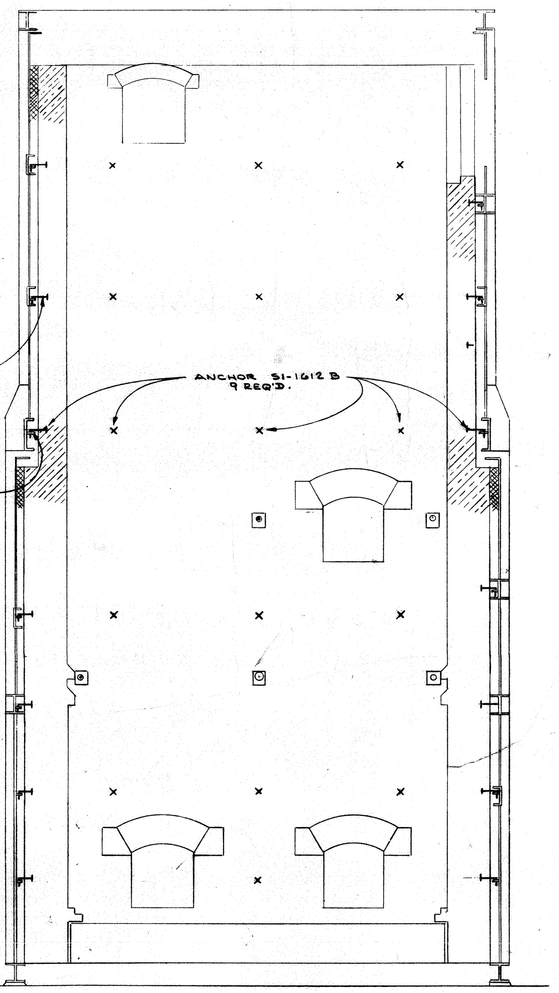

SECTION 3-3

C/N-40771 — AS SHOWN FOR UNITS 1 & 3
OPPOSITE HAND FOR UNITS 2 & 4

C/N 41277 — AS SHOWN FOR UNIT 2
OPP. HAND FOR UNIT 1
⚠

ASBUILT SHOP DRAWING

SARGENT & LUNDY, INC. Consulting Engineers
☒ NO EXCEPTIONS NOTED
☐ EXCEPTIONS NOTED
SUBMIT ____ PRINTS FOR DISTRIBUTION
☐ RETURNED FOR CORRECTION
Review does not relieve contractor of responsibility for conformity with contract requirements, correct details and fit of parts when assembled.
SARGENT & LUNDY, INC. BY [signature] DATE 5/31/78
CITY OF HOUSTON BY _____ DATE _____

J-0
JOB NO. 3304-DS
41277
RAYMOND DIVISION, CHICAGO, ILL. CONTR. NO. 40771

WALL ANCHOR ARRANGEMENT
FOR CITY OF HOUSTON

SCALE 1/2"=1'-0" DRAWN BY C.H. DATE 5-3-78
TRACED BY CHECKED BY [signature]
APPROVED [signature]

THIS DRAWING IS THE PROPERTY OF COMBUSTION ENGINEERING, INC.
AND IS NOT TO BE REPRODUCED, OR USED TO FURNISH ANY INFORMATION FOR MAKING OF DRAWINGS OR APPARATUS EXCEPT WHERE PROVIDED FOR BY AGREEMENT WITH SAID COMPANY.

DRAWING NO. E-51-1699-1

DWG. NO. 18045 (SHT. NO. 27 OF)

E-51-1602

18045

W. W. RECORDS MICROFILM DATE 5-26-78

SIXTEEN NO. 136-R ASSEMBLY

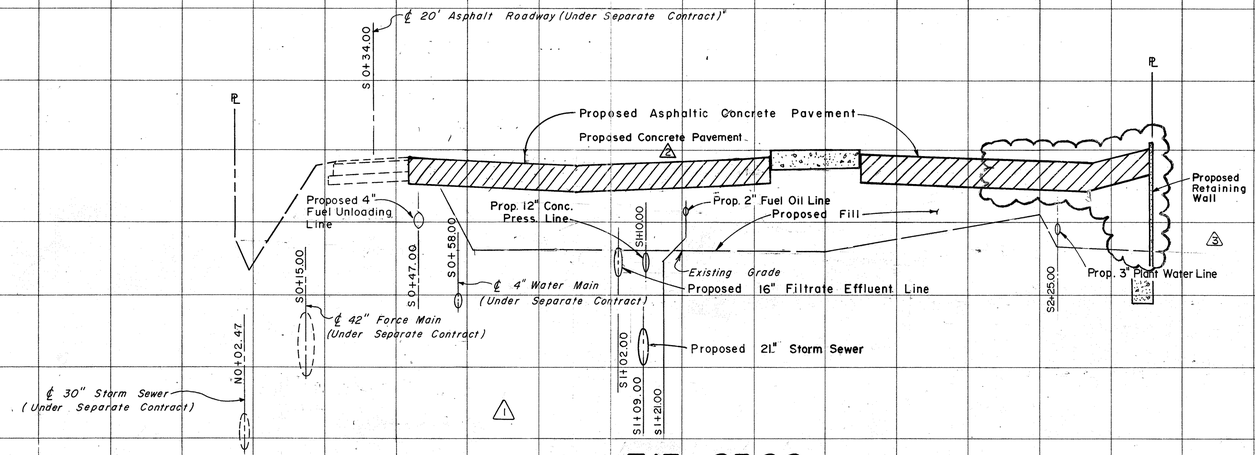

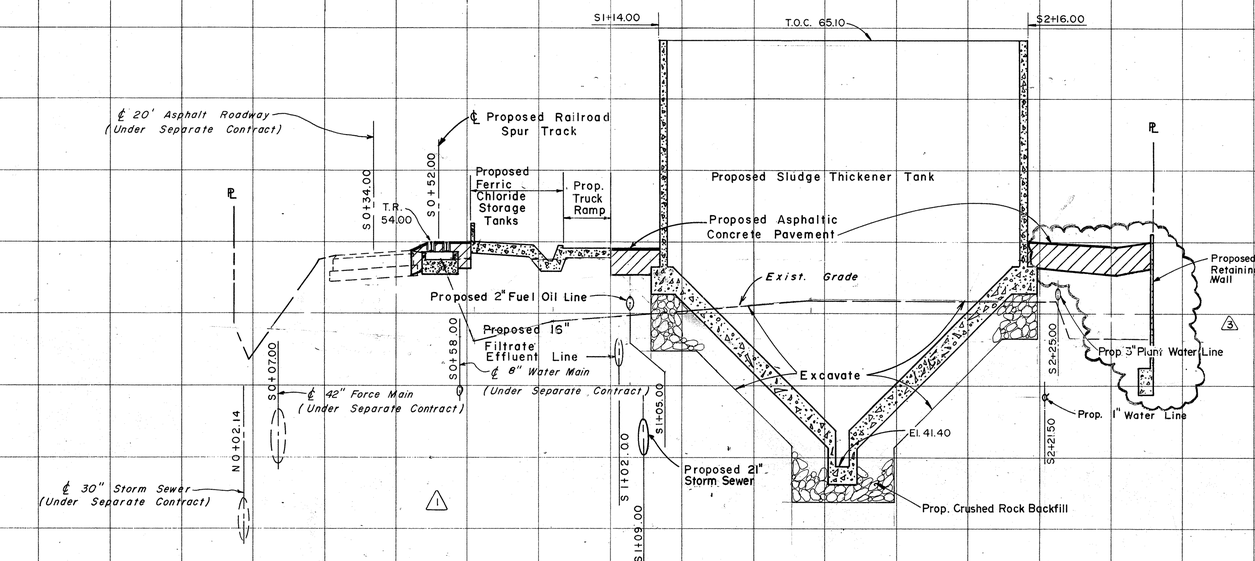

REV. NO.	DATE	DESCRIPTION	DESIGN	CHECKED
3	10-78	PERMIT REVISION-ADDED RETAINING WALL & PAVMNT.	H.J.K.	K.R.L.
2	6-77	GENERAL REVISIONS	J.C.S.	K.R.L.
1	3-77	GENERAL REVISIONS	J.C.S.	S.R.S.

CITY OF HOUSTON
DEPARTMENT OF PUBLIC WORKS

ALMEDA SIMS SLUDGE DISPOSAL PLANT-1973

CROSS SECTIONS

RECOMMENDED FOR APPROVAL:
BINKLEY & HOLMES, INC., CONSULTING ENGINEERS

APPROVED:
CHIEF ENGINEER — ASST. CHIEF ENGINEER
ASST. DIRECTORS OF PUBLIC WORKS
DIRECTOR OF PUBLIC WORKS

DESIGNED BY: M. B. J. & H.R.E.
DRAWN BY: G. DORMAN
CHECKED BY: M. B. J. & H.R.E.
SCALE: HORIZ. 1" = 20', VERT. 1" = 4'
DATE: Dec., 1973
SHEET 28 OF 200 SHEETS
DRAWING NO. 18045

0+00 S1+00 S2+00

℄ 20' Asphalt Roadway (Under Separate Contract)
℄ Proposed Railroad Spur Tracks (Under Separate Contract)
S0+34.00 S0+52.00 S0+72.00
Proposed Grade
T.R. 54.00
Prop. Loading and Storage Building (Under Separate Contract)
Prop. Grade
Existing Grade
Proposed Fill
Proposed Fill
℄ Proposed 8" Gas Line
S0+07.00 S0+12.00
℄ 42" Force Main (Under Separate Contract)
N0+01.00
℄ 24" Storm Sewer (Under Separate Contract)
S0+58.00
℄ 8" C.I. Water Main (Under Separate Contract)
Proposed Retaining Wall
Proposed Sanitary Sewer
7'-6"
54 50 46 42 38

E 9+25.00 (2)

℄ 20' Asphalt Roadway (Under Separate Contract)
℄ Proposed Railroad Spur Tracks (Under Separate Contract)
S0+34.00 S0+52.00
Prop. Grade
Prop. Loading and Storage Building (Under Separate Contract)
Prop. Retaining Wall
Proposed Fill
Existing Grade
℄ Proposed 8" Gas Line
S0+07.00 S0+12.00
℄ 42" Force Main (Under Separate Contract)
N0+01.00
℄ 24" Storm Sewer (Under Separate Contract)
℄ 8" C.I. Water Main (Under Separate Contract)
S0+58.0
Proposed 8" Sanitary Sewer
7'-6"
54 50 46 42 38

E 8+10.00 (2)

℄ 20' Asphalt Roadway (Under Separate Contract)
℄ Proposed Railroad Spur Track (Under Separate Contract)
S0+34.00 S0+52.00
T.R. 54.00
Proposed Grade
Existing Grade
℄ Proposed 8" Gas Line
S0+07.00 S0+12.00
℄ 42" Force Main (Under Separate Contract)
N0+01.00
℄ 24" Storm Sewer (Under Separate Contract)
S0+58.00
℄ 8" C.I. Water Main (Under Separate Contract)
Proposed Retaining Wall T.O.W. El. 54.50
Proposed Sanitary Sewer
7'-6"
54 50 46 42 38

E 7+25.00 (2)

0+00 S1+00 S2+00

℄ 20' Asphalt Roadway (Under Separate Contract)
℄ Proposed Railroad Spur Track (Under Separate Contract)
S0+34.00 S0+52.00
T.R. 54.00
Proposed Asphaltic Concrete Pavement
Proposed Fill
Prop. Power Center Slab
Proposed Fuel Oil Line
Existing Grade
Prop. Retaining Wall
Prop. 3" Plant Water Line
Prop. 8" Sludge Line
℄ 8" C.I. Water Main (Under Separate Contract)
S0+58.00
Prop. 2" Air, Water & Ferric Chloride Lines
Prop. 16" Filtrate Effluent Line
Prop. 8" Drain Line
S0+07.00
℄ 42" Force Main (Under Separate Contract)
N0+01.58
Prop. 15" Storm Sewer
S0+79.00
℄ 30" Storm Sewer (Under Separate Contract)
S2+15.00 S2+19.00
7'-6"
Prop. Sanitary Sewer
54 50 46 42 38

E 12+00.00 (2)

℄ 20' Asphalt Roadway (Under Separate Contract)
℄ Proposed Railroad Spur Track (Under Separate Contract)
S0+34.00 S0+52.00
T.R. 54.00
Proposed Dryer Room S1+05.00
Proposed Filter Room S1+61.96
Proposed Asphaltic Concrete Pavement
S2+20.58 S2+40.53
Proposed Constant Head Tank
Proposed Fill
Existing Grade
Proposed Retaining Wall
Prop. 10" Drain Line
S0+07.00 S0+58.00
℄ 8" C.I. Water Main (Under Separate Contract)
℄ 42" Force Main (Under Separate Contract)
N0+01.12
Prop. 15" Storm Sewer
S0+79.00
℄ 30" Storm Sewer (Under Separate Contract)
Proposed Sanitary Sewer
7'-6"
54 50 46 42 38

E 11+00.00 (2)

REV. NO.	DATE	DESCRIPTION	DESIGN	CHECKED
4	10-78	CONSTRUCTION REVISION REVISED 8" SANITARY SEWER	H.J.K.	K.R.L.
3	6-77	GENERAL REVISIONS	J.C.S.	K.R.L.
2	3-77	SECTIONS GENERALLY REVISED TO SUIT PLANS	J.C.S.	S.R.S.
1	4-76	REVISED SAN. SEWER & FORCE MAIN	J.J.	D.R.Y.

CITY OF HOUSTON
DEPARTMENT OF PUBLIC WORKS

ALMEDA SIMS
SLUDGE DISPOSAL
PLANT - 1973

CROSS SECTIONS

RECOMMENDED FOR APPROVAL:
BINKLEY & HOLMES, INC., CONSULTING ENGINEERS

APPROVED:
CHIEF ENGINEER — ASST. CHIEF ENGINEER
ASST. DIRECTORS OF PUBLIC WORKS
DIRECTOR OF PUBLIC WORKS

DESIGNED BY: M.D.J. & H.R.E.
DRAWN BY: G. DORMAN
CHECKED BY: M.D.J. & H.R.E.
SCALE: HORIZ. 1"=20', VERT. 1"=4'
DATE: Dec., 1973
SHEET 29 OF 200 SHEETS
DRAWING NO. 18045

BILL OF MATERIAL

MARK	REQ'D	DESCRIPTION	REMARKS	WT.

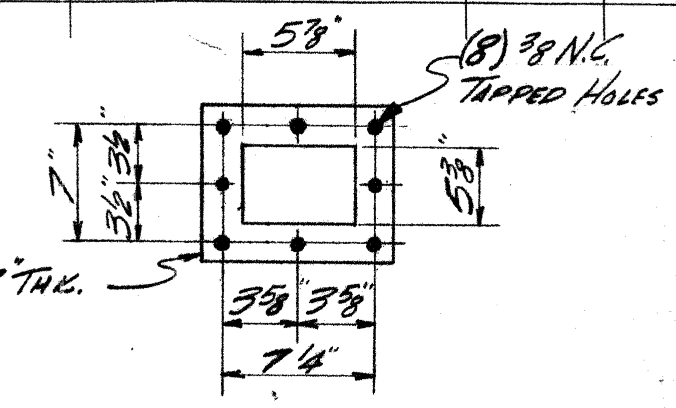

SECTION A-A
DUST VALVE DISCHARGE FLG.

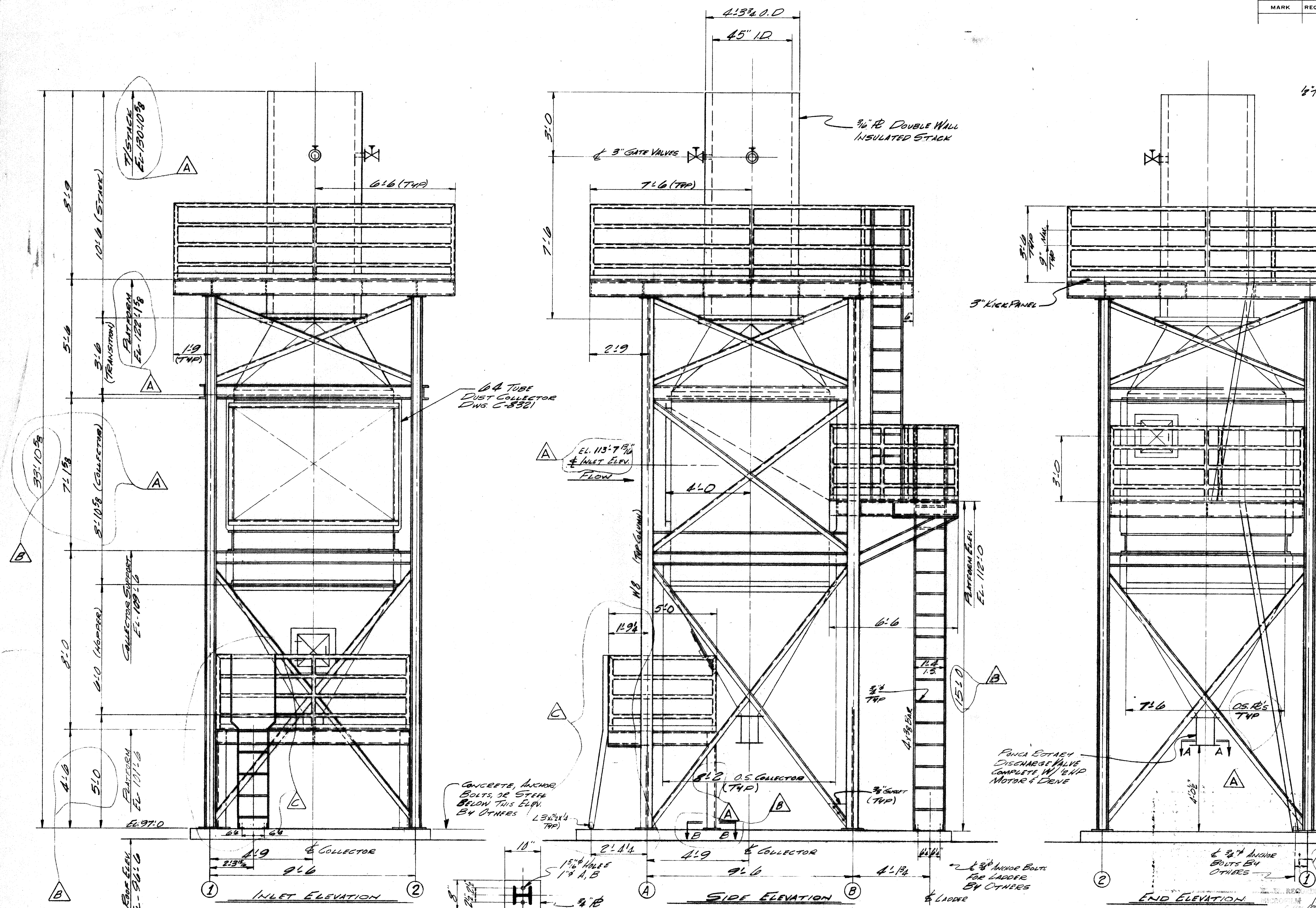

NOTES:
1. TWO SYSTEMS REQ'D AS SHOWN.
2. EQUIPMENT SHOWN WILL BE DESIGNED IN ACCORDANCE W/ THE JOB SPECIFICATION WHICH INCLUDES THE CITY OF HOUSTON BUILDING CODE, OSHA REGULATIONS & OTHERS AS APPLICABLE.
3. DUST COLLECTOR, HOPPER, STACK & STRUCTURAL STEEL PAINTED WITH MOBILE 10-86 HIGH HEAT ZINC DUST SILVER GRAY PAINT.
4. LADDERS & PLATFORMS TO BE GALVANIZED.
5. ALL EQUIPMENT SHOWN ON THIS DWG. SUPPLIED BY BARRON IND. INC. UNLESS NOTED.
6. SEAL WELD CONNECTING FLANGES ON INSIDE AFTER ERECTION.

APR 11 1978
JOB NO. 3304-DS

ASBUILT SHOP DRAWING

NO.	BY	DATE	DESCRIPTION	
C	GNK	2-17-78	REV ANCHOR BOLT LOCATION EL. 97'-0 & REV. LADDER @ EL 101'-6	TCM 2-20-78
B	GNK	1-27-78	REV. PER APPROVAL DWGS.	TCM 1-27-78
A	GNK	1-3-78	REV. COLLECTOR WIDTH & HEIGHT	TCM 1-9-78

REVISIONS

NOTICE
THIS DRAWING IS THE PROPERTY OF BARRON INDUSTRIES AND IS LOANED ON THE CONDITION THAT IT SHALL NOT BE MADE PUBLIC, COPIED, OR REPRODUCED IN WHOLE OR IN PART UNLESS AUTHORIZED BY BARRON INDUSTRIES.
ALL ITEMS OF MATERIAL AND EQUIPMENT SHOWN BUT NOT FURNISHED BY BARRON INDUSTRIES ARE FOR ILLUSTRATIVE PURPOSES ONLY AND BARRON INDUSTRIES SHALL NOT BE HELD RESPONSIBLE FOR PERFORMANCE, OPERATION OR INSTALLATION OF SUCH EQUIPMENT.

BARRON INDUSTRIES
ENGINEERS & MANUFACTURERS
Leeds, Alabama

COMBUSTION ENGR PROCESS EQUIP. CHICAGO ILL.

CITY OF HOUSTON, HOUSTON, TEXAS
ALMEDA SIMS SLUDGE PLANT

SLUDGE DRYER DUST COLLECTOR - ARRG'T OF COLLECTOR, STACK & PLATFORMS

DRAWN BY - DATE	CHECKED BY - DATE	APPROVED BY - DATE
GNK 12-9-77	N.B. 12-20-77	

SCALE	DRAWING NO.	REV
½" = 1'-0	C-8382	C
JOB NO. M-3420	SHEET 1 OF 2	

DWG. NO. 18045 (SHT. NO. 29 OF)

C-M-1423-JAX	REVISIONS	1	CARBON STL. & DUCTILE IRON ADDED. C.H. 8-13-71	2	REDRAWN R.J.C. 12-2-75	3	UPDATED DETAILS, & ADD. PART NOS. 4-23-77

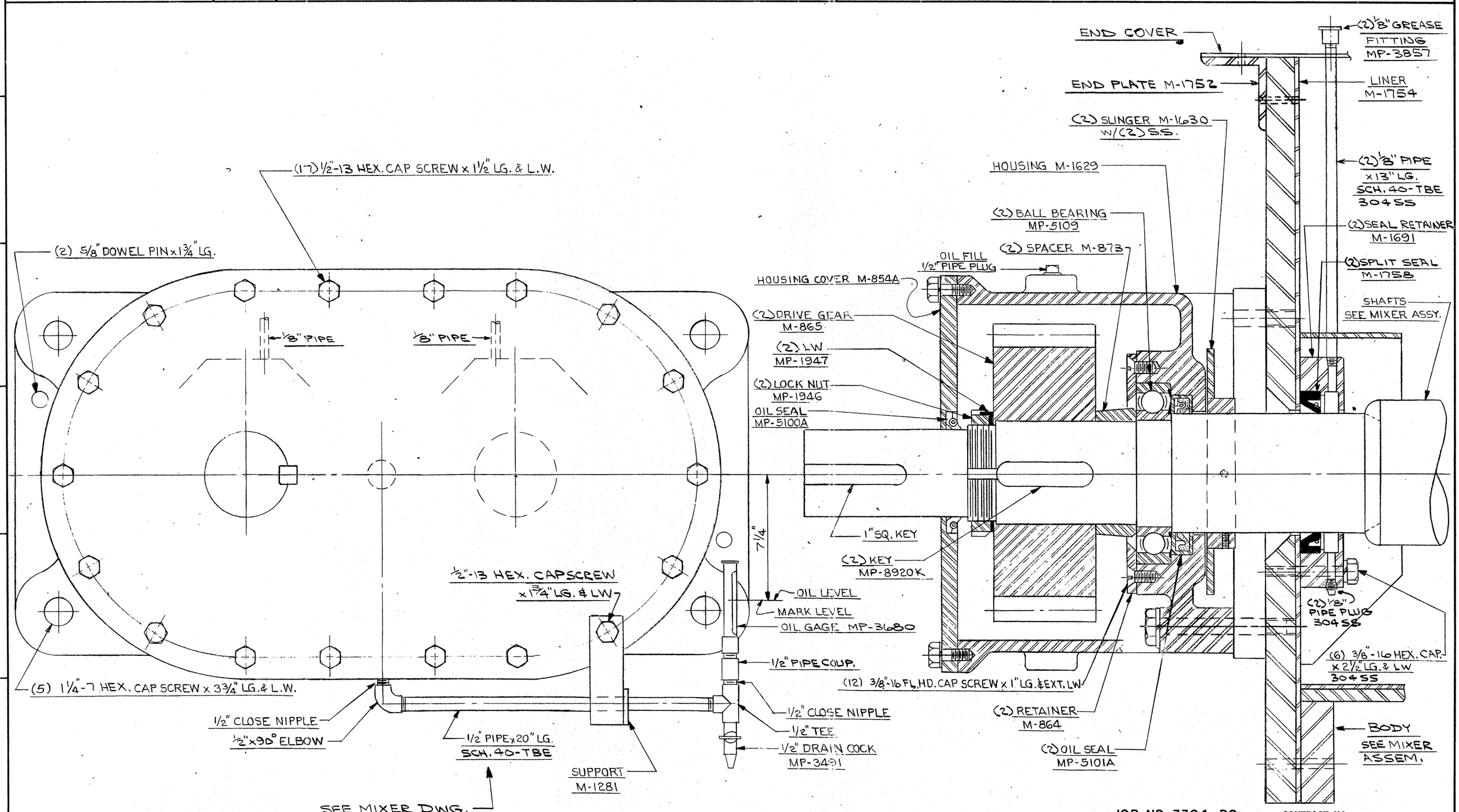

CITY OF HOUSTON
DEPT. OF PUBLIC WORKS — WASTEWATER DIVISION

REVIEWED FOR GENERAL CONFORMANCE WITH DESIGN CONCEPT OF PROJECT AND GENERAL COMPLIANCE WITH THE CONTRACT DRAWINGS SPECIFICATIONS, AND DOCUMENTS.

☒ NO EXCEPTION
☐ EXCEPTIONS AS NOTED
☐ REJECTED - REVISE AND RESUBMIT

Review of shop drawings shall in no way relieve the contractor of responsibility for deviation from requirements of contract documents, nor for errors or omissions in shop drawings. Contractor is responsible for confirming and correlating dimensions at job site, for information which pertains to fabrication processes or construction techniques, for fit of parts when assembled, and for coordination of work of all trades. This review does not supercede or overrule laboratory analysis or test reports.

BY: [illegible]
DATE: 12-4-78

BINKLEY & HOLMES, INC. Consulting Engineers
☒ NO EXCEPTIONS NOTED
☐ EXCEPTIONS NOTED
REVISE AND RESUBMIT FOR DISTRIBUTION
☐ RETURNED FOR CORRECTION
Review does not relieve contractor of responsibility for conformity with contract requirements, correct details and fit of parts when assembled.
BINKLEY & HOLMES, INC. BY [illegible] DATE 11/30/78
CITY OF HOUSTON BY [illegible] DATE 12-4-78

FILL GEAR CASE WITH HIGH-GRADE TURBINE OIL CONTAINING RUST & OXIDATION INHIBITORS & A VISCOSITY OF APPROX. 900 SECONDS SAYBOLT @ 100°F

FILL SEALS THROUGH GREASE PIPE WITH A #2 LITHIUM BASE GREASE HAVING AN ASTM DROPPING POINT OF 375°F MINIMUM AND A WORKED PENETRATION OF 260-290 AT 77°F

J-3

ASBUILT SHOP DRAWING

C-M-1423-JA
C-M-1423-J

W. W. RECORDS MICROFILM DATE 6/26/82

JOB NO. 3304-DS CONTRACT NO.

THRUST BEARING ASSEMBLY
24" DOUBLE PADDLE MIXER
FOR

SCALE —
DRAWN BY CJC
TRACED BY —
DATE 10-23-70
CHECKED BY CH
APPROVED BGT 9/7/71

THIS DRAWING IS THE PROPERTY OF COMBUSTION ENGINEERING, INC.

AND IS NOT TO BE REPRODUCED, OR USED TO FURNISH ANY INFORMATION FOR MAKING OF DRAWINGS OR APPARATUS EXCEPT WHERE PROVIDED FOR BY AGREEMENT WITH SAID COMPANY.

DRAWING NO. C-M-1423-JAX-3

DWG. NO. 18045 (SHT. NO. 30 OF)

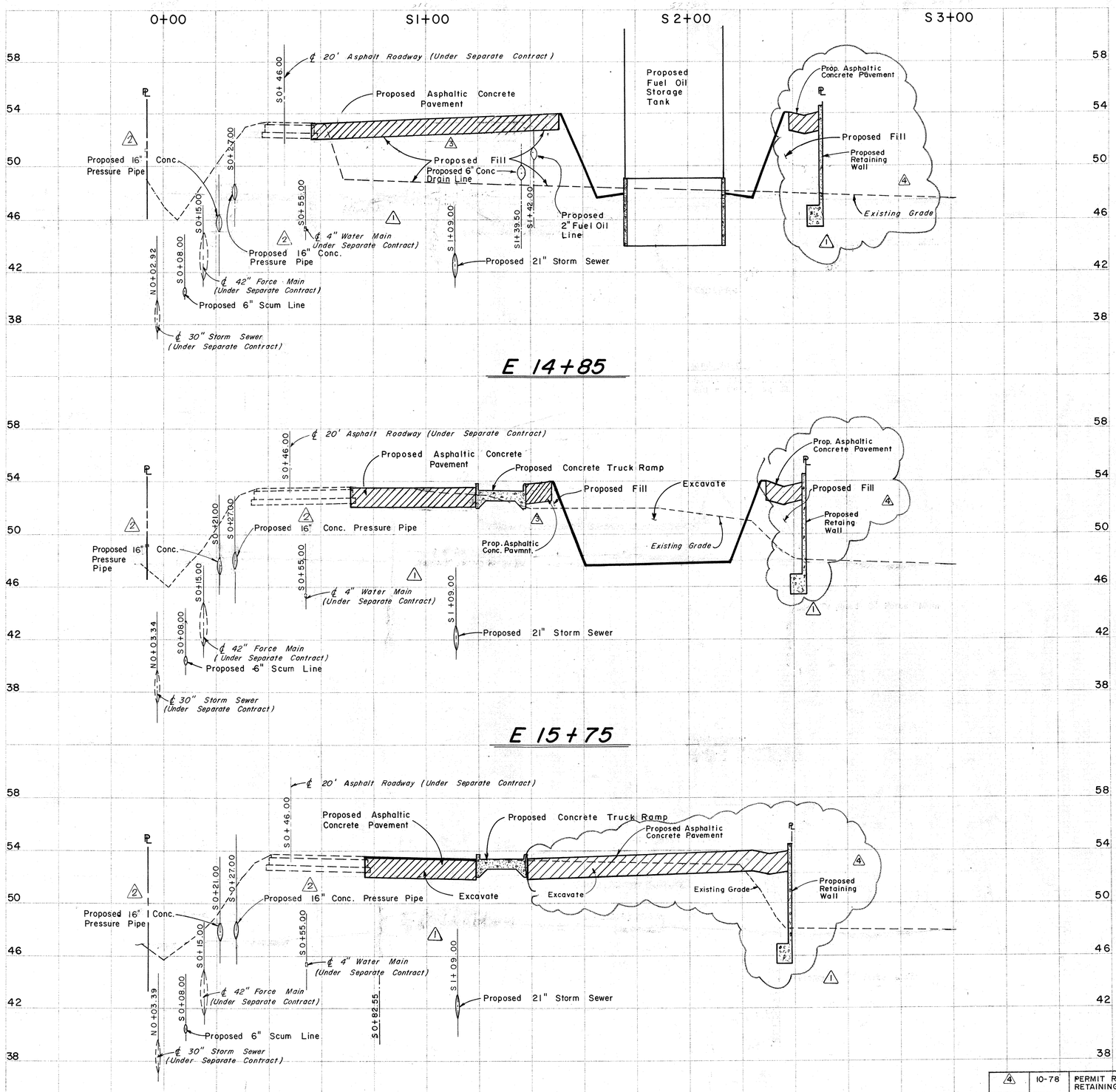

REV. NO	DATE	DESCRIPTION	DESIGN	CHECKED
4	10-78	PERMIT REVISIONS – ADDED RETAINING WALL & PAVMNT.	H.J.K.	K.R.L.
3	6-77	GENERAL REVISIONS	J.C.S.	K.R.L.
2	3-77	8" AIRLINE (UNDER SEP. CONT) REMOVED – 36" & 24" CONC PRESS. PIPES REV'D TO 16"	J.C.S.	S.R.S.
1	4-76	Added 8" Air Line Removed 6" Force Main	J.C.J.	D.R.Y.

STATE OF TEXAS — K. R. EICHSTEDT — 34665 — REGISTERED PROFESSIONAL ENGINEER

STATE OF TEXAS — PAUL R. HOLMES — 27638 — REGISTERED PROFESSIONAL ENGINEER

CITY OF HOUSTON
DEPARTMENT OF PUBLIC WORKS

ALMEDA SIMS SLUDGE DISPOSAL PLANT-1973

CROSS SECTIONS

RECOMMENDED FOR APPROVAL:
BINKLEY & HOLMES, INC., CONSULTING ENGINEERS

APPROVED:
CHIEF ENGINEER — ASST. CHIEF ENGINEER
ASST. DIRECTORS OF PUBLIC WORKS
DIRECTOR OF PUBLIC WORKS

DESIGNED BY: R.P.D. & H.R.E.
DRAWN BY: G. DORMAN
CHECKED BY: T.G.L. & H.R.E.
SCALE: HORIZ. 1"=20', VERT. 1"=4'
DATE: SEPT. 1975
SHEET 30 OF 200 SHEETS
DRAWING NO. 18045

BILL OF MATERIAL				
MARK	REQ'D	DESCRIPTION	REMARKS	WT.

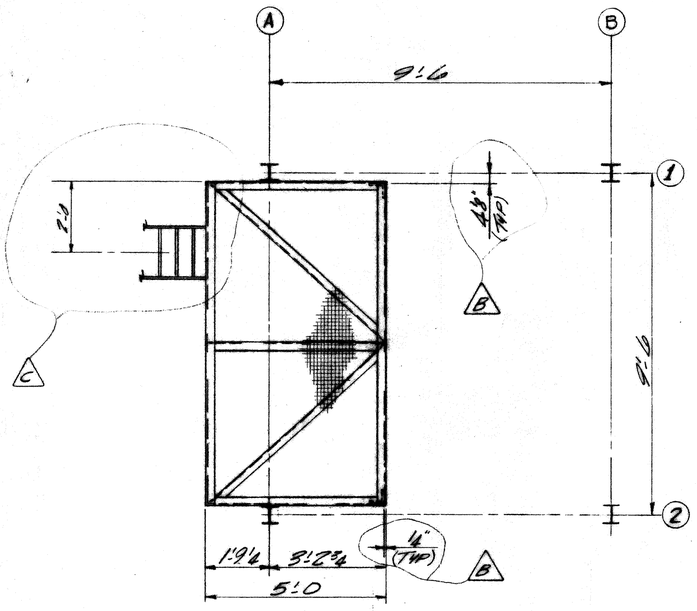

PLAN @ PLATFORM
ELEV. 101'-6 (T.O.S.)

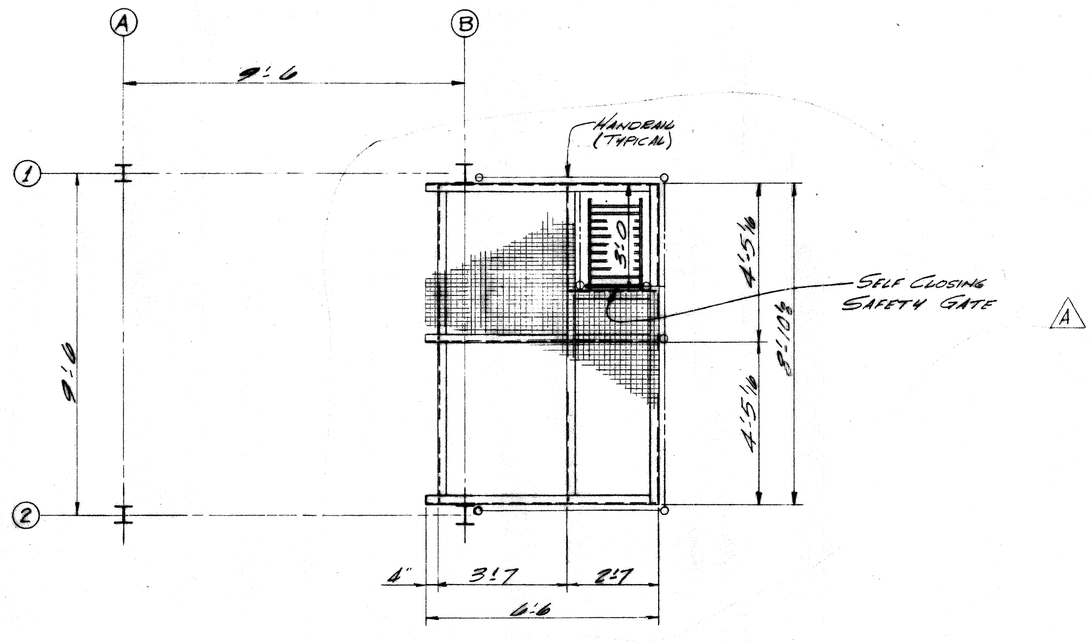

PLAN @ PLATFORM
ELEV. 112'-0

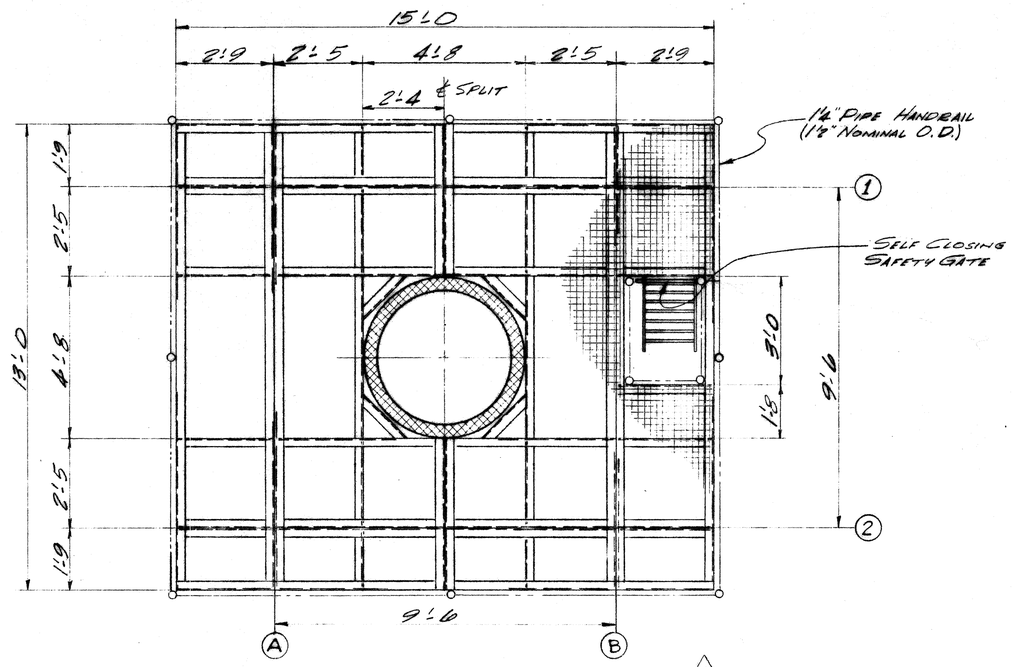

PLAN @ PLATFORM
ELEV. 122'-1⅝ (T.O.S.)

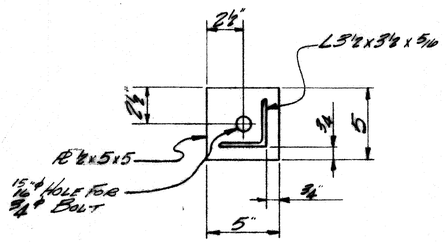

SECTION B-B

B

SHIRLEY & HOLMES, INC. Consulting Engineers
☒ NO EXCEPTIONS NOTED
☐ EXCEPTIONS NOTED
REVIEW AND RESUBMIT FOR DISTRIBUTION
☐ RETURNED FOR CORRECTION
Review does not relieve contractor of responsibility for conformity with contract requirements, correct details and fit of parts when assembled.
SHIRLEY & HOLMES, INC. BY [illegible] DATE 4/3/78
CITY OF HOUSTON BY [illegible] DATE 12-4-78

CITY OF HOUSTON
DEPT. OF PUBLIC WORKS — WATERWATER DIVISION
REVIEWED FOR GENERAL CONFORMANCE WITH DESIGN CONCEPT OF PROJECT AND GENERAL COMPLIANCE WITH THE CONTRACT DRAWINGS SPECIFICATIONS, AND DOCUMENTS.
☒ NO EXCEPTION
☐ EXCEPTIONS AS NOTED
☐ REJECTED - REVISE AND RESUBMIT
Review of shop drawings shall in no way relieve the contractor of responsibility for deviation from requirements of contract documents, nor for errors or omissions in shop drawings. Contractor is responsible for confirming and correlating dimensions at job site, for information which pertains to fabrication processes or construction techniques, for fit of parts when assembled, and for coordination of work of all trades. This review does not supercede or overrule laboratory analysis or test reports.
BY: [illegible]
DATE: 12-4-78

W. W. RECORDS
MICROFILM
DATE 6/06/83

ASBUILT SHOP DRAWING

SEE SHEET 1 FOR NOTES.

APR 11 1978
CERTIFIED COPY
BY [illegible]
BARRON INDUSTRIES
LEEDS, ALABAMA

JOB NO. 3304-DS

NO.	BY	DATE	DESCRIPTION
C	GNK	8-18-78	REV. DIMS. & ℄ PER 2-20-78
			REV. LADDER LOCATION EL-101-6
B	GNK	1-8-78	REV. PER APPROVAL DWGS PER 1-27-78
A	GNK	12-13-77	REV. PLATFORM @ EL-112'-0 & CHANGE ℄ EL-101'-6 TO 122'-1⅝

REVISIONS

NOTICE
THIS DRAWING IS THE PROPERTY OF BARRON INDUSTRIES AND IS LOANED ON THE CONDITION THAT IT SHALL NOT BE MADE PUBLIC, COPIED, OR REPRODUCED IN WHOLE OR IN PART UNLESS AUTHORIZED BY BARRON INDUSTRIES.
ALL ITEMS OF MATERIAL AND EQUIPMENT SHOWN, BUT NOT FURNISHED BY BARRON INDUSTRIES ARE FOR ILLUSTRATIVE PURPOSES ONLY AND BARRON INDUSTRIES SHALL NOT BE HELD RESPONSIBLE FOR PERFORMANCE, OPERATION OR INSTALLATION OF SUCH EQUIPMENT.

BARRON INDUSTRIES
ENGINEERS & MANUFACTURERS
Leeds, Alabama

COMBUSTION ENGR. PROCESS EQUIP.
CHICAGO, ILL.

CITY OF HOUSTON HOUSTON, TEXAS
ALMEDA SIMS SLUDGE PLANT
SLUDGE DRYER DUST COLLECTOR-
HEIGHT OF COLLECTOR, STACK & PLATFORMS

DRAWN BY – DATE	CHECKED BY – DATE	APPROVED BY – DATE
GNK 12-13-77	M.B. 12-20-77	

SCALE	DRAWING NO.	REV.
⅜" = 1'-0	C-8322	C
JOB NO. M-3420	SHEET 2 OF 2	

DWG. NO. 18045 (SHT. NO. 30 OF)

DRAFTRACE 280

SOUTH ELEVATION

REV NO	DATE	DESCRIPTION	DESIGN	CHECKED
2	6-77	Rev. Air Piping	J.C.S.	K.R.L
1	3-77	Rev. Piping Add Chemical & M.C.C. Room	J.C.S.	S.R.S.

CITY OF HOUSTON
DEPARTMENT OF PUBLIC WORKS

ALMEDA-SIMS
SLUDGE DISPOSAL
PLANT-1973

FILTER ROOM
SOUTH ELEVATION

RECOMMENDED FOR APPROVAL:
BINKLEY & HOLMES, INC., CONSULTING ENGINEERS

APPROVED:
CHIEF ENGINEER
ASST. CHIEF ENGINEER
ASST. DIRECTORS OF PUBLIC WORKS
DIRECTOR OF PUBLIC WORKS

DESIGNED BY: M.B.J
DRAWN BY: E. Thomas
CHECKED BY: M.B.J.
SCALE: 1/4" = 1'-0"
DATE: Dec., 1973
SHEET 31 OF 200 SHEETS
DRAWING NO. 18045

D-SP-703A	REVISIONS	2	REDRAWN, ADD. I.D. SYSTEMS 4-4-27-78

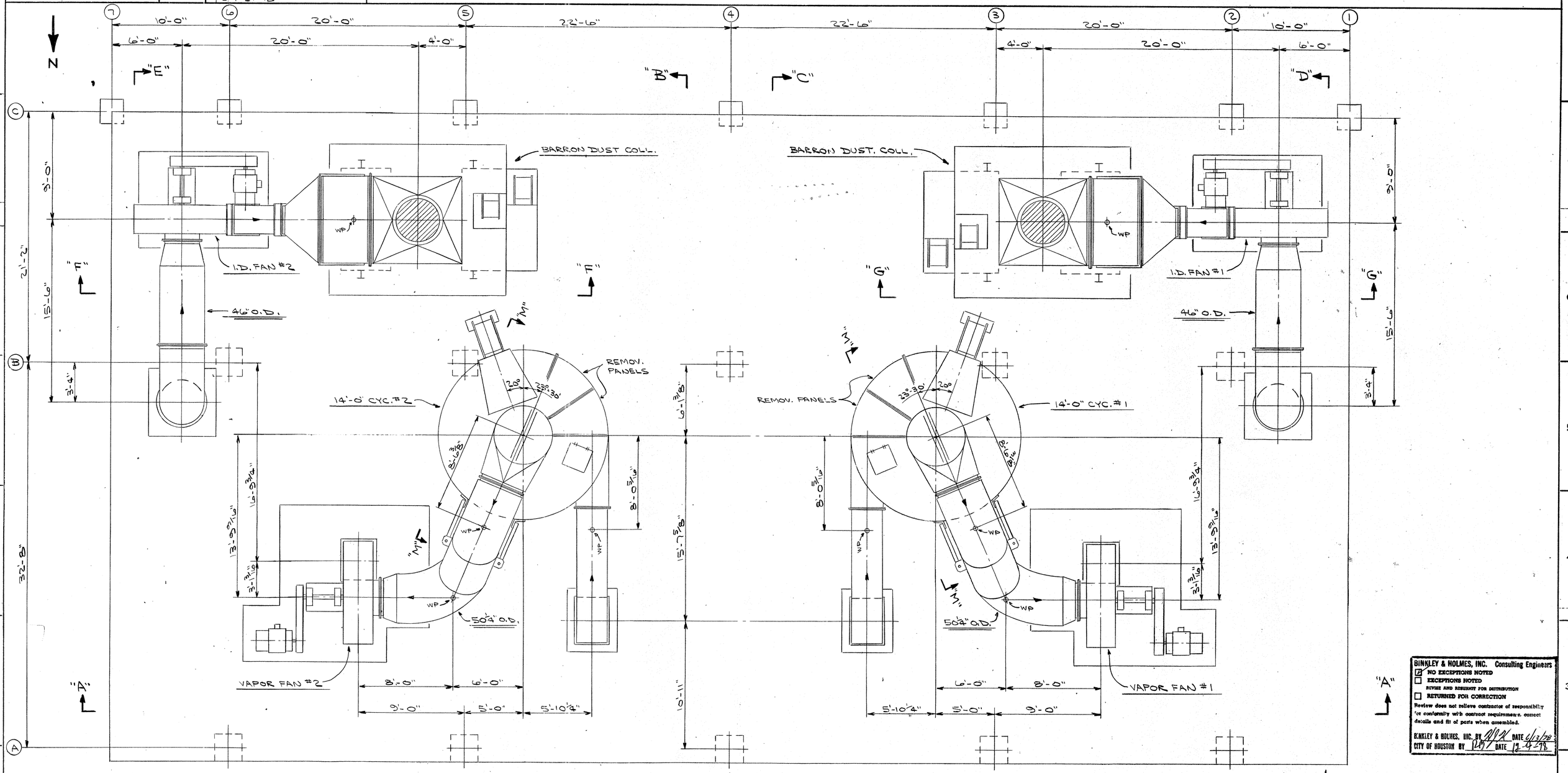

THE FOLLOWING EQUIPMENT NOT FURNISHED BY C.E. RAYMOND.

- FOUNDATION AND BOLTS EXCEPT AS NOTED
- MOTORS AND DRIVES EXCEPT AS NOTED
- SUPPORTS EXCEPT AS NOTED
- HOPPERS AND BINS
- CONVEYORS AND ELEVATORS
- SPOUTS
- ROOF FLASHINGS EXCEPT AS NOTED

NOTES:

ALL PIPING SHOULD BE SUPPORTED INDEPENDENTLY AND BRACED BY OTHERS.
PIPING PIECE NUMBERS WILL BE MARKED AS SHOWN IN SHOP.

- ○ MATCH MARKS
- □ PIPE PIECE NO.
- L.F. LOOSE FLANGE, WELD TO PIPE IN FIELD.
- ⊗ 3" ADDED TO LENGTH OF PIPE.
- P.C. 1" PIPE COUPLING & PIPE PLUG. EXCEPT AS NOTED

CITY OF HOUSTON
DEPT. OF PUBLIC WORKS — WASTEWATER DIVISION

REVIEWED FOR GENERAL CONFORMANCE WITH DESIGN CONCEPT OF PROJECT AND GENERAL COMPLIANCE WITH THE CONTRACT DRAWINGS SPECIFICATIONS, AND DOCUMENTS.

- ☑ NO EXCEPTION
- ☐ EXCEPTIONS AS NOTED
- ☐ REJECTED - REVISE AND RESUBMIT

Review of shop drawings shall in no way relieve the contractor of responsibility for deviation from requirements of contract documents, nor for errors or omissions in shop drawings. Contractor is responsible for confirming and correlating dimensions at job site, for information which pertains to fabrication processes or construction techniques, for fit of parts when assembled, and for coordination of work of all trades. This review does not supercede or overrule laboratory analysis or test reports.

BY: RLM
DATE: 12-4-78

D-SP-703B LOWER PLAN
D-SP-703C ELEV. "A-A"
D-SP-703D VIEW "B-B" & "C-C"
D-SP-703E VIEW "D-D" & "E-E"
D-SP-703F ELEV. "F-F" & "G-G", VIEW "M-M" & MISC. PLANS

ASBUILT SHOP DRAWING W. W. RECORDS MICROFILM DATE 6/26/82

BINKLEY & HOLMES, INC. Consulting Engineers
☑ NO EXCEPTIONS NOTED
☐ EXCEPTIONS NOTED
REVISE AND RESUBMIT FOR DISTRIBUTION
☐ RETURNED FOR CORRECTION
Review does not relieve contractor of responsibility re conformity with contract requirements, correct details and fit of parts when assembled.
BINKLEY & HOLMES, INC. BY [signature] DATE 6/3/78
CITY OF HOUSTON BY RLM DATE 12-4-78

SERIAL NOS. 77030 & 77031
JOB NO. 3304-DS CONTRACT NO. 41277

(2) 14'-0" CAGE MILL FLASH DRYING SYSTEMS
ROOF PLAN
FOR
ALMEDA SIMS PLANT
CITY OF HOUSTON, TEXAS

SCALE 1/4" = 1'-0" DATE 1-28-76
DRAWN BY E CHECKED BY Ben
TRACED BY APPROVED RLM

THIS DRAWING IS THE PROPERTY OF COMBUSTION ENGINEERING, INC.
AND IS NOT TO BE REPRODUCED, OR USED TO FURNISH ANY INFORMATION FOR MAKING OF DRAWINGS OR APPARATUS EXCEPT WHERE PROVIDED FOR BY AGREEMENT WITH SAID COMPANY.

DRAWING NO. D-SP-703A-2

DWG. NO. 18045 H (SHT. NO. 31 OF)

POST-126-3

105'-0"

10'-0" | 20'-0" | 22'-6" | 22'-6 | 20'-0" | 10'-0"

7'-2½" ℄ 16"Φ Foot Pulley

16'-Φ Foot Pulley 7'-2½"

3'-0" 9"

4'-0" Wide Pipe Trench For 6" & 8" Filtrate Lines And 4" Seal Water Drain Line & Fog Pump Drain

2'-6"

4'-0" (Typ.)

14'-6"

℄ Pump — Dry Vacuum Pump No. 1

℄ Pump — Wet Vacuum Pump No. 1

℄ Pump — Dry Vacuum Pump No. 2

CONVEYOR "E"

℄ Pump — Dry Vacuum Pump No. 3

℄ Pump — Wet Vacuum Pump No. 2

CONVEYOR "F"

Dry Vacuum Pump See Detail M 175-A

℄ Pump — Dry Vacuum Pump No. 4

Wet Vacuum Pump See Detail N 175-A

℄ Pump — Wet Vacuum Pump No. 3

9'-6"

6'-0" | 4'-0" | 5'-6" | 9'-0" | 5'-6" | 16'-10" | 5'-8" | 6'-0" | 16'-6" | 6'-0" | 10'-0" | 4'-0"

3'-0" (Typ.)

8'-4" ℄ 16"Φ Ft. Pulley

2'-3" ℄ Conv.

4'-3"

9'-0" ℄ Conv.

CONVEYOR "B"

CONVEYOR "A"

For Conveyors See Sht. 109 to 114

CONVEYOR "D"

℄ 16"Φ Foot Pulley

2'-3" Conv. ℄

CONVEYOR "C"

5'-8" ℄ 24"Φ Head Pulley

8'-4" ℄ 16"Φ Foot Pulley

4'-0" ℄ 16"Φ Foot Pulley

60'-0"

9'-6"

17'-6"

Filter Blowers See Detail Sections H 173 J 173

Plant Air See Detail Sections K 173 L 173

Instrument Air Compressors & Air Dryer See Detail F 172

Plant Water Tank & Pumps (N.P.W.) See Detail Sections D 172 E 172

12'-0" | 2'-8" | 3'-8" | 6'-4"

Non-Potable Water Tank

7'-0" Dia. Plant Water Tank Approx. 3000 Gal.

6" | 2'-3" | 1'-3"

1'-10" | 5'-6"

For Piping Plans Sht. 168 & 169

5'-10"

Stairway Type I See Sheet 52

UP

℄ 6" C.I. City Water (Potable) Line El. 64.50

℄ Polymer Dilution System Rack

Rolling Door See Detail D 122

Chemical Room See Sht. 118 To 122

Polymer Pumps

Concentrated Polymer Storage Tank #5

Concentrated Polymer Storage Tank #6

Diluted Polymer Use Tank #7

Diluted Ferric Chloride Use Tank #8

Emergency Shower & Eye Wash

Drinking Fountain

WALL HEATER

REST ROOM SEE SHT. 70

WH

Ferric Chloride Dilution System Rack

EXHAUST FAN

Air Lift Blowers See Detail B 67

5'-8"

1'-0" | 3'-4" | 2'-0" | 3'-4" | 1'-7"

Air Lift To Constant Head Tank From Sludge Holding Tank

Blower Pad See Sht. 67

Sludge Holding Tank Aeration Blowers, See Detail Section A 67

(Holding Tank Air Blowers)

Blower Pad See Sht. 67

Density Meter Pad See Sht. 57

Instrument Air Compressors and Air Dryers (By Others)

Air Lift To Constant Head Tank From Sludge Holding Tank

Air Dryer

Instrument Air Compressor

Air Dryer

Instrument Air Compressor

20'-0"

10'-0"

10'-0"

17'-6"

10'-0" | 20'-0" | 11'-3" | 11'-3" | 11'-3" | 11'-3" | 10'-0" | 10'-0" | 10'-0"

63'-9"

1 | 2 | 3 | 3A | 4 | 4A | 5 | 5A | 6 | 7

N

NOTE:

FOR SIZE AND LOCATION OF ELEC. CONDUIT OPENINGS IN SLAB, SEE ELECTRICAL DRAWINGS.

REV. NO.	DATE	DESCRIPTION	DESIGN	CK
3	11-78	Construction Revisions Rev. Vacuum Pump Layout Rev. Platform @ Bulited Chemical Tanks	M.J.K	KRL
2	6-77	Rev. Air Piping Rev. Vacuum Pumps Add Inst. Air Comp. Add Chemical Room	J.C.S.	KRL
1	3-77		J.C.S	S.R.S.

CITY OF HOUSTON
DEPARTMENT OF PUBLIC WORKS

ALMEDA-SIMS SLUDGE DISPOSAL PLANT - 1973

FILTER ROOM EQUIPMENT LAYOUT ELEVATION 54.50

RECOMMENDED FOR APPROVAL:
BINKLEY & HOLMES, INC., CONSULTING ENGINEERS

APPROVED:
CHIEF ENGINEER — ASST. CHIEF ENGINEER
ASST. DIRECTORS OF PUBLIC WORKS
DIRECTOR OF PUBLIC WORKS

DESIGNED BY: M.D.T
DRAWN BY: M. NUNIZ
CHECKED BY: M.D.T
SCALE: 1/4" = 1'-0"
DATE: Dec., 1973
SHEET 32 OF 200 SHEETS
DRAWING NO. 18045

D-SP-703B | REVISION 2 | UPDATED DETS., REV. OIL PUMP L 4-27-78

N

E

B

C

D

A

10'-0" | 20'-0" | 22'-6" | 22'-6" | 20'-0" | 10'-0"

7 6 5 4 3 2 1

C

B

A

PEABODY OIL PUMP
LOD-7-300
FIELD: ENLARGE (4) BASE MTG. HOLES TO 7/8" DIA.

C.A. FAN #2

C.A. FAN #1

4'-0" | 22½"

11" | 3'-2¾" | 8'-2¾" | 5'-11" | 24" O.D. | 3'-4"

WP

HANGER ASSEM-C

C.A. PREHEATER

(2) HANGER ASSEM-B

HANGER ASSEM-A

UPPER PLAT. & LADDER D-51-1764

LOWER PLAT. D-51-1763

16'-9¾"

HANGER ASSEM-E

4'-0"

5'-6½"

(2) HANGER ASSEM-D

SUPPORT B2A

SUPPORT B1A

(2)PC

24" D.P. MIXER #2

24" D.P. MIXER #1

375-30 CAGE MILL #2

375-30 CAGE MILL #1

10'-3½"

2'-8½"

56½" O.D.

4'-1¼"

10'-11"

13'-2"

6'-7½" | 6'-7½"

10" | 2'-10" | 3'-8" | 7'-2¼" | 9'-0" | 10'-10¼"

℄ FURNACE #2

℄ FURNACE #1

21'-2"

32'-8"

OPERATOR ROOM
SEE D-SP-703F

CITY OF HOUSTON
DEPT. OF PUBLIC WORKS — WASTEWATER DIVISION

REVIEWED FOR GENERAL CONFORMANCE WITH DESIGN CONCEPT OF PROJECT AND GENERAL COMPLIANCE WITH THE CONTRACT DRAWINGS SPECIFICATIONS, AND DOCUMENTS.

☑ NO EXCEPTIONS
☐ EXCEPTIONS AS NOTED
☐ REJECTED - REVISE AND RESUBMIT

Review of shop drawings shall in no way relieve the contractor of responsibility for deviation from requirements of contract documents, nor for errors or omissions in shop drawings. Contractor is responsible for confirming and correlating dimensions at job site, for information which pertains to fabrication processes or construction techniques, for fit of parts when assembled, and for coordination of work of all trades. This review does not supercede or overrule laboratory analysis or test reports.

BY: RM
DATE: 12-4-75

BINKLEY & HOLMES, INC. Consulting Engineers
☑ NO EXCEPTIONS NOTED
☐ EXCEPTIONS NOTED
REVISE AND RESUBMIT FOR DISTRIBUTION
☐ RETURNED FOR CORRECTION
Review does not relieve contractor of responsibility for conformity with contract requirements & correct details and fit of parts when assembled.
BINKLEY & HOLMES, INC. BY [illegible] DATE 12/3/75
CITY OF HOUSTON BY RM DATE 12-4-75

D-SP-703A — ROOF PLAN
D-SP-703C — ELEV. A-A
D-SP-703D — VIEW B-B & C-C
D-SP-703E — VIEW D-D & E-E

ASBUILT SHOP DRAWING

W. W. RECORDS MICROFILM DATE 6/21/82

SERIAL NOS. 77030 & 77031
JOB NO. 3304-DS
CONTR. NO. 41277

(2) 14'-0" CAGE MILL FLASH DRYING SYSTEMS
LOWER PLAN
FOR ALMEDA SIMS PLANT
CITY OF HOUSTON, TEXAS

SCALE ¼" = 1'2
DRAWN BY L
TRACED BY
DATE 1-28-76
CHECKED BY
APPROVED EWC - 1-28-76

THIS DRAWING IS THE PROPERTY OF COMBUSTION ENGINEERING, INC. AND IS NOT TO BE REPRODUCED, OR USED TO FURNISH ANY INFORMATION FOR MAKING OF DRAWINGS OR APPARATUS EXCEPT WHERE PROVIDED FOR BY AGREEMENT WITH SAID COMPANY.

DRAWING NO. D-SP-703B-2

DWG. NO. 18045 (SHT. NO. 32 OF)

DIETZGEN No. 138-3 AGEPROOF

105'-0"

10'-0" | 20'-0" | 1'-3" | 22'-6" | 10'-8" | 22'-6 | 8'-8" | 20'-0" | 10'-0"

14'-6" | 9'-6" | 9'-0" | 9'-6" | 18'-6" | 9'-6" | 9'-0" | 9'-6" | 17'-6" | 20'-0"

3'-6" 12" EXHAUST FROM VACUUM PUMP

Fog Fire Pumps See Detail G 174

3'-6" 10" EXHAUST FROM VACUUM PUMP

3'-6" 10" EXHAUST FROM VACUUM PUMP

AS REQUIRED FOR EQUIPMENT FURNISHED

2'-0" 6" CONTROL CABINET 24" WIDE x 30" DEEP

6'-7¾" 5'-10"

Vacuum Filter Unit Drive No. 2

Vacuum Filter Unit Drive No. 4

Vacuum Filter Unit Drive No. 6

Vacuum Filter Unit Drive No. 1

Vacuum Filter Unit Drive No. 3

Vacuum Filter Unit Drive No. 5

N

NOTE:

FOR SIZE AND LOCATION OF ELEC. CONDUIT OPENINGS IN SLAB, SEE ELECTRICAL DRAWINGS.

Flocculator (Typ) 5'-4"

Flocculation Control Cabinet See Detail A 178B

3'-8"

3'-10" & Filter & Flocculator

Chemical Control Rack See Detail G 172

Handrail See Detail Sht. 46

Rolling Door See Sht.

14'-0" x 14'-0" Opening

Note: Jib Crane Mounted 1000# Cap. 180° Rotation w/ 12 Adj.

Down STAIRWAY TYPE 1 SEE SHT. 52

UP STAIRWAY TYPE 5 SEE SHT. 52

17'-6" | 19'-2" | 33'-4" | 33'-4" | 19'-2" | 17'-6"

MOTOR CONTROL CENTER ROOM For Plan & Detail See Sht. 70

LUNCH ROOM SEE SHT. NO. 70

SUPERINTENDENTS OFFICE SEE SHT. NO. 70

CONSTANT HEAD TANK

SLUDGE HOLDING TANK SEE SHT. NO. 55

SINK

A/C Unit

A/C Unit

10'-0" | 10'-0" | 20'-0"

10'-0" | 20'-0" | 11'-3" | 11'-3" | 11'-3" | 11'-3" | 10'-0" | 10'-0" | 10'-0"

1 2 3 3A 4 4A 5 5A 6 7

C D E F G H J K

REV. NO.	DATE	DESCRIPTION	DESIGN	CK
5	10-79	Construction Revisions Modify Block Walls	D.D.C.	HJK
4	3-79	Construction Revisions Relocate Chemical Pipe Rack And Control Cabinet	WGW	HJK
3	12-78	Construction Revisions Relocate Vac. Exhaust Line	HJK	KRL
2	11-78	Addendum Revisions Add 2nd Fog Fire Pump.	HJK	KRL
1	3-77	Rev. Flocculation System - Add M.C.C. Relocate F.F. Pump	J.C.S.	SRS

CITY OF HOUSTON
DEPARTMENT OF PUBLIC WORKS

ALMEDA-SIMS SLUDGE DISPOSAL PLANT-1973

FILTER ROOM EQUIPMENT LAYOUT ELEVATION 70.50

RECOMMENDED FOR APPROVAL:
BINKLEY & HOLMES, INC., CONSULTING ENGINEERS

APPROVED:
CHIEF ENGINEER — ASST. CHIEF ENGINEER
ASST. DIRECTORS OF PUBLIC WORKS
DIRECTOR OF PUBLIC WORKS

DESIGNED BY: M.D.J.
DRAWN BY: M. MUNIZ
CHECKED BY: M.D.J.
SCALE: 1/4" = 1'-0"
DATE: Dec., 1979
SHEET 33 OF 200 SHEETS
DRAWING NO. 18045

D-SP-703C	REVISION	2	ADD. MARKS & 4-27-78

VAPOR FAN #2
A-S SIZE 37, SERIES 106 FAN
SPEED = 993 RPM
150 HP, 1200 RPM TEFC MOTOR
WT. = 5900 LBS.

BELT GUARD
DF-1238B
W/(2) 3/4" DIA. MTG. HOLES
ANCHORS (NOT BY CE)
WELD MTG. L TO FAN IN FIELD

RELIEF VENT D1-11371
BUMPER D1-63361H

50 1/4" O.D.

EL. 116'-5"

EL. 113'-6"

EL. 110'-2 1/8"

EL. 99'-0"

EL. 97'-0"

46" O.D.

2" PIPE COUP. (FS)

EXP. JT. D1-11315

PC (FS)

VAPOR DAMPER D1-11521B

VAPOR HOOD D1-11527

EL. 85'-2"

C.A. PREHEATER

EL. 77'-1 1/2"

2" PIPE COUP.

4'-0"

24" O.D.

C.A. FAN #2
A-S SIZE 19, SERIES 106 FAN
W/OUTLET DAMPER
SPEED = 1299 RPM
15 HP, 1200 RPM TEFC MOTOR
WT. = 950 LBS.

FL. EL. 54'-6"

16" DBL. VALVE SC-17745

DRY DIVIDER

9" SCREW CONV.

EL. 80'-6"

℄ MIX. #2

7'-2 1/4"

2'-8 1/2"

3'-8"

HOPPER M-1931A

DISCH. SPOUT D1-10922

EL. 66'-8 1/2"

(4) 2" PIPE

(2) 2" PC

6'-5"

LF - DO NOT WELD IN FIELD

56 1/2" O.D.

10'-10 1/4"

22'-6"

375-30 CAGE MILL #2

℄ FURNACE #2

10'-0"

11'-0"

9'-0"

6'-7 1/2"

22 1/2"

RELIEF VENT D1-11371
BUMPER D1-63361H

50 1/4" O.D.

EL. 97'-0"

2'-11"

2'-7 1/4"

7'-6"

7'-4 3/4"

5'-0"

4'-4 1/4"

3'-0"

4'-0"

18"

16" DBL. VALVE SC-17745

DRY DIVIDER

9" SCREW CONV.

℄ MIX. #1

7'-2 1/4"

HOPPER M-1931B

DISCH. SPOUT D1-10922

EL. 66'-8 1/2"

56 1/2" O.D.

10'-10 1/4"

22'-6"

375-30 CAGE MILL #1

℄ FURNACE #1

VAPOR FAN #1
A-S SIZE 37, SERIES 106 FAN
SPEED = 993 RPM
150 HP, 1200 RPM TEFC MOTOR
WT. = 5900 LBS.

BELT GUARD
DF-1258A
W/(2) 3/4" DIA. MTG. HOLES
ANCHORS (NOT BY CE)
WELD MTG. L TO FAN IN FIELD

46" O.D.

EL. 97'-0"

EXP. JT. D1-11315

PC (FS)

VAPOR DAMPER D1-11521A

VAPOR HOOD D1-11527

EL. 77'-1 1/2"

2" PIPE COUP.

4'-0"

24" O.D.

C.A. FAN #1
A-S SIZE 19, SERIES 106 FAN
W/OUTLET DAMPER
SPEED = 1299 RPM
15 HP, 1200 RPM TEFC MOTOR
WT. = 950 LBS.

6'-5"

LF - DO NOT WELD IN FIELD

6'-7 1/2"

9'-0"

11'-0"

10'-0"

22 1/2"

CITY OF HOUSTON
DEPT. OF PUBLIC WORKS — WASTEWATER DIVISION

REVIEWED FOR GENERAL CONFORMANCE WITH DESIGN CONCEPT OF PROJECT AND GENERAL COMPLIANCE WITH THE CONTRACT DRAWINGS SPECIFICATIONS, AND DOCUMENTS:

- ☒ NO EXCEPTION
- ☒ EXCEPTIONS AS NOTED
- ☐ REJECTED - REVISE AND RESUBMIT

Review of shop drawings shall in no way relieve the contractor of responsibility for deviation from requirements of contract documents, nor for errors or omissions in shop drawings. Contractor is responsible for confirming and correlating dimensions at job site, for information which pertains to fabrication processes or construction techniques, for fit of parts when assembled, and for coordination of work of all trades. This review does not supercede or overrule laboratory analysis or test results. 85-C

BY: [illegible]
DATE: 12-4-78

C.A. PREHEATER

BINKLEY & HOLMES, INC. Consulting Engineers
☒ NO EXCEPTIONS NOTED
☐ EXCEPTIONS NOTED
REVISE AND RESUBMIT FOR DISTRIBUTION
☐ RETURNED FOR CORRECTION
Review does not relieve contractor of responsibility for conformity with contract requirements, correct details and fit of parts when assembled.
BINKLEY & HOLMES, INC. BY [illegible] DATE 6/3/76
CITY OF HOUSTON BY [illegible] DATE 12-4-78

SERIAL NOS. 77030 & 77031
JOB NO. 3304-DS
CONTR. NO. 41377

(2) 14'-0" CAGE MILL FLASH DRYING SYSTEMS
FOR ALMEDA SIMS PLANT
CITY OF HOUSTON, TEXAS

SCALE 1/4" = 1'2
DRAWN BY [illegible]
TRACED BY
DATE 1-28-76
CHECKED BY
APPROVED [illegible] 1/28/76

THIS DRAWING IS THE PROPERTY OF COMBUSTION ENGINEERING, INC.
AND IS NOT TO BE REPRODUCED, OR USED TO FURNISH ANY INFORMATION FOR MAKING OF DRAWINGS OR APPARATUS EXCEPT WHERE PROVIDED FOR BY AGREEMENT WITH SAID COMPANY.

DRAWING NO. D-SP-703C-2

DWG. NO. 18045 (SHT. NO. 33 OF)

ELEV. A-A

D-SP-703A — ROOF PLAN
D-SP-703B — LOWER PLAN

W. W. RECORDS MICROFILM DATE 6/16/82

ASBUILT SHOP DRAWING

DIETZGEN No. 138-3 AGEPROOF

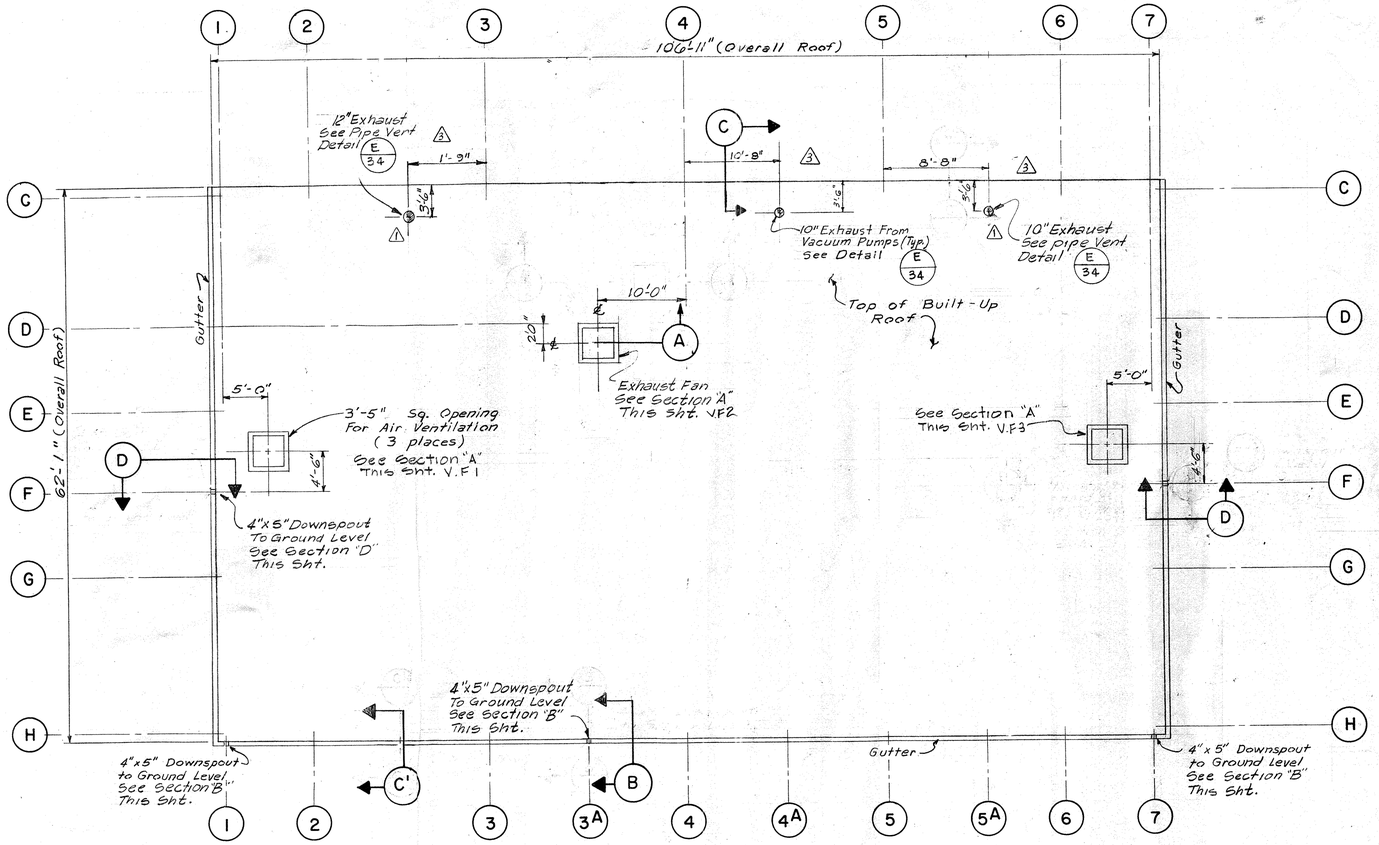

PLAN - ROOF LAYOUT

Scale: 1/8" = 1'-0"

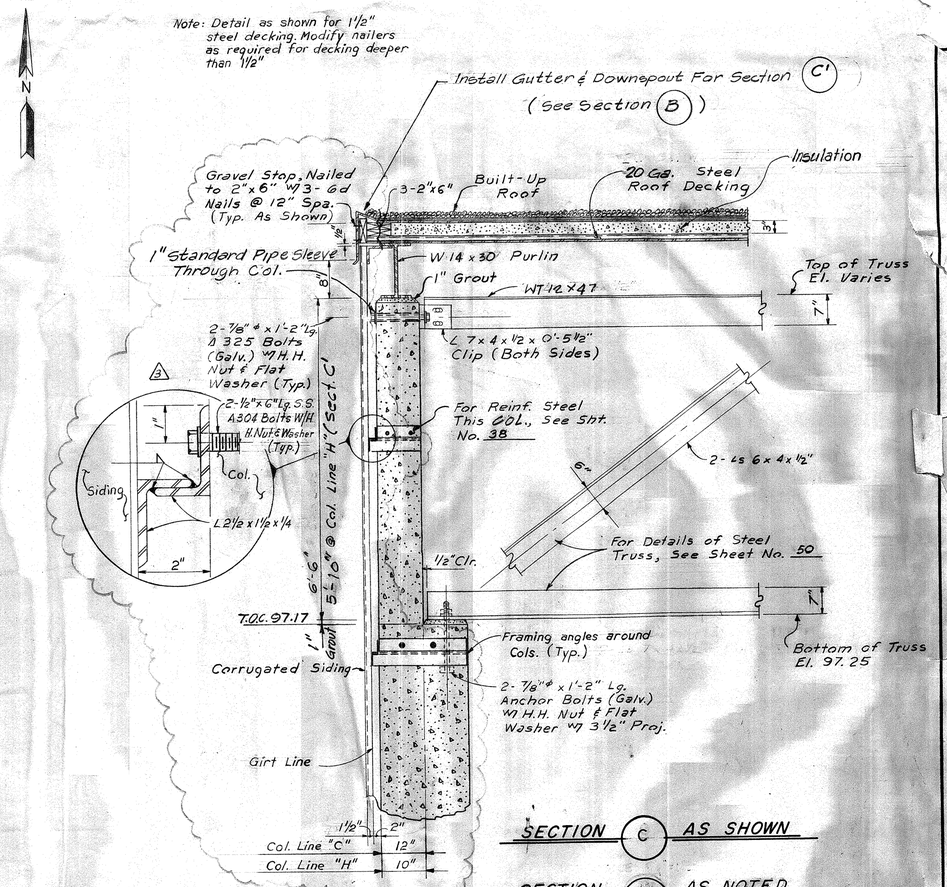

SECTION C AS SHOWN

SECTION C' AS NOTED

Scale ¾" = 1'-0"

Note: Gutter, Brace, Gravel Stop, and Downspout Shall Be 26 Ga. Stainless Steel.

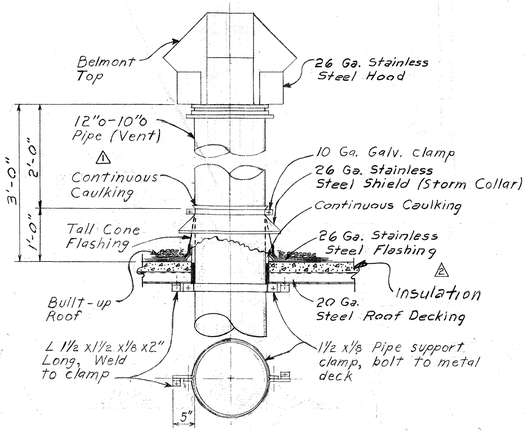

3 REQUIRED

PIPE VENT DETAIL E 34

Scale: ¾" = 1'-0"

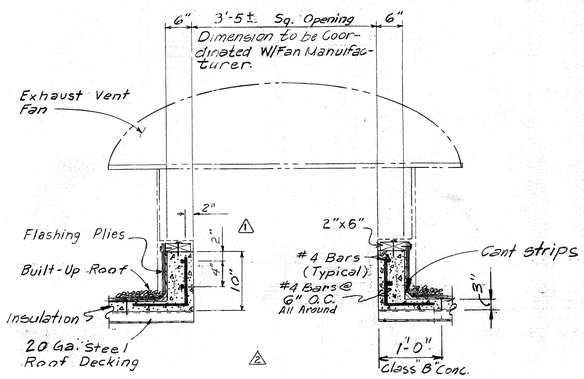

ROOF VENTILATOR DETAIL

SECTION A

Scale: ¾" = 1'-0"

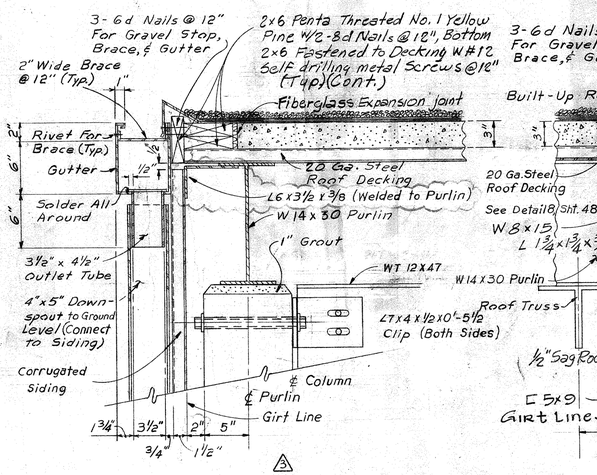

SECTION B

Scale: 1½" = 1'-0"

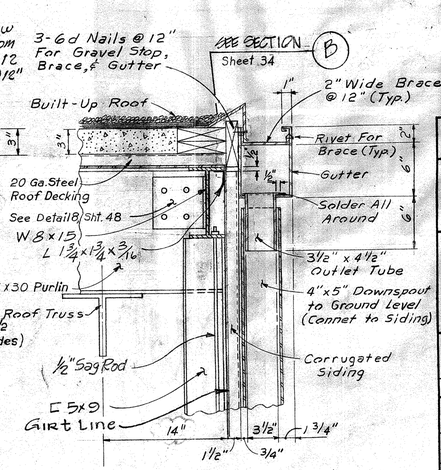

SECTION D

Scale: 1½" = 1'-0"

REV. NO.	DATE	DESCRIPTION	DESIGN	CHECKED
3	11-78	Contruction Revision. Relocate Vacuum Exhaust Vent. Rev. Girt Line, Gravel Stop & Gutter Details	H.J.K.	K.R.L.
2	6-77	Rev. Exhaust Fan Rev. Exhaust Vent	J.C.S.	K R L
1	3-77	Rev. Exhaust Fan Dim. Rev. Exhaust Vent Pipe	J.C.S.	S R S

CITY OF HOUSTON
DEPARTMENT OF PUBLIC WORKS

ALMEDA SIMS SLUDGE DISPOSAL PLANT - 1973

FILTER ROOM
ROOF LAYOUT AND DETAILS

RECOMMENDED FOR APPROVAL:
BINKLEY & HOLMES, INC., CONSULTING ENGINEERS

APPROVED:
CHIEF ENGINEER — ASST. CHIEF ENGINEER
ASST. DIRECTORS OF PUBLIC WORKS
DIRECTOR OF PUBLIC WORKS

DESIGNED BY: V Jafri
DRAWN BY: G. Dorman
CHECKED BY: M.D.J.
SCALE: AS NOTED
DATE: Dec., 1973
SHEET 34 OF 200 SHEETS
DRAWING NO. 18045

D-SP-703D | REVISION 2 | ADD. MARKS & 4-27-78

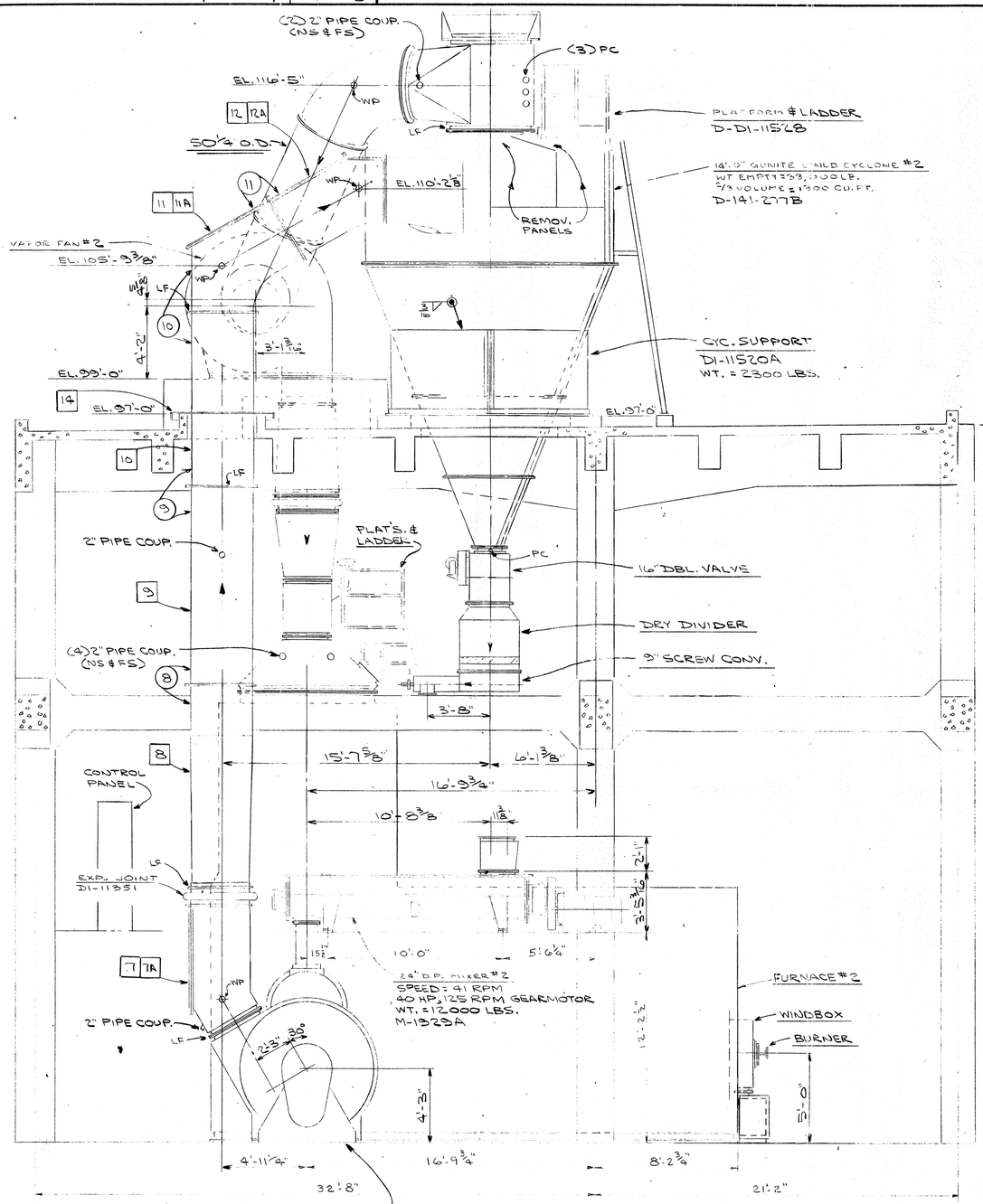

375-30 CAGE MILL #2
S/N 77031
SPEED = 218 RPM
30 HP, 900 RPM TEFC MOTOR
WT. = 17500 LBS.
FD-1900B

VIEW B-B

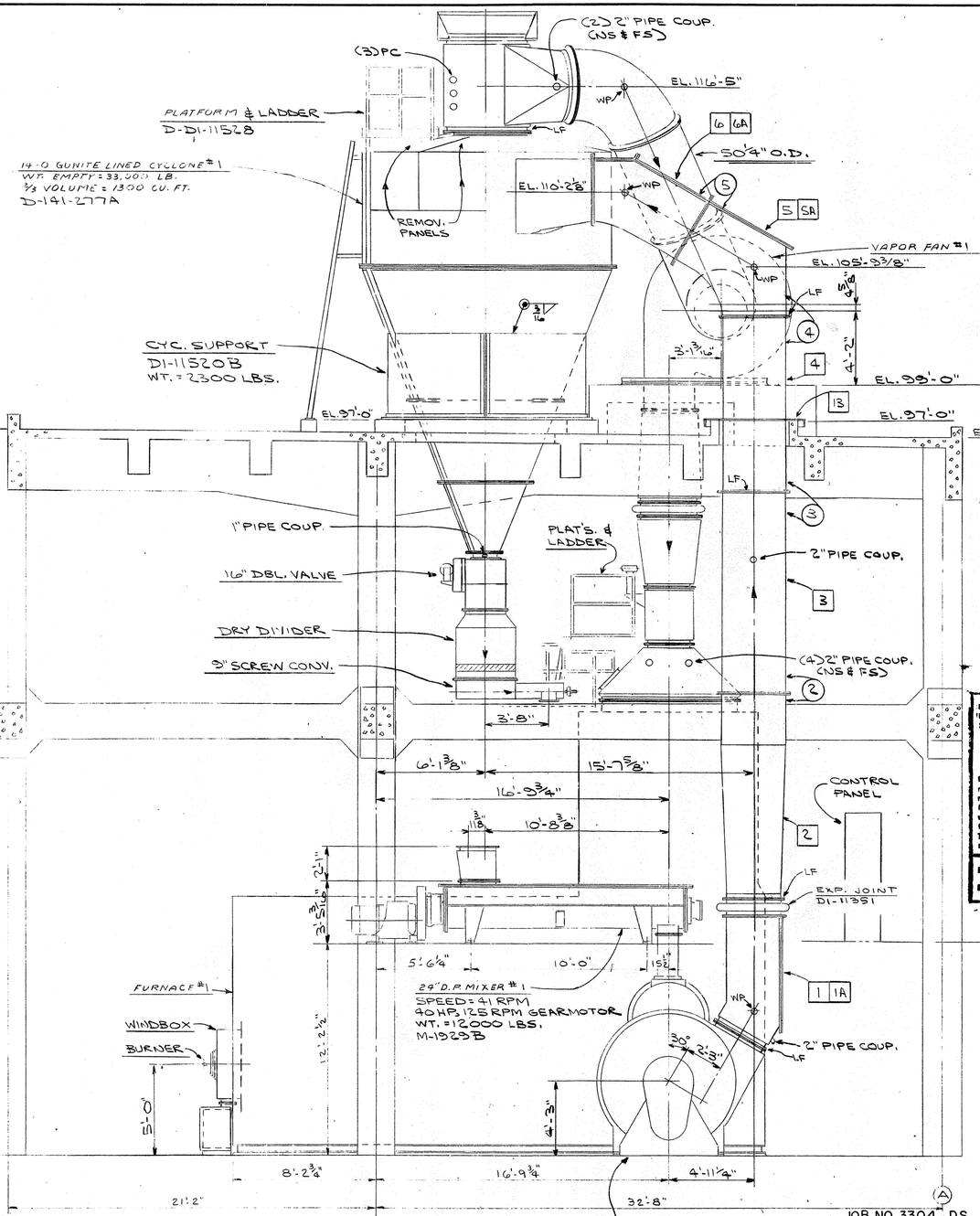

375-30 CAGE MILL #1
S/N 77030
SPEED = 218 RPM
30 HP, 900 RPM TEFC MOTOR
WT. = 17500 LBS.
FD-1900A

VIEW C-C

ASBUILT SHOP DRAWING

D-SP-703A — ROOF PLAN
D-SP-703B — LOWER PLAN

W. W. RECORDS MICROFILM DATE 6/26/03

CITY OF HOUSTON
DEPT. OF PUBLIC WORKS — WASTEWATER DIVISION

REVIEWED FOR GENERAL CONFORMANCE WITH DESIGN CONCEPT OF PROJECT AND GENERAL COMPLIANCE WITH THE CONTRACT DRAWINGS SPECIFICATIONS, AND DOCUMENTS:

- ☒ NO EXCEPTION
- ☐ EXCEPTIONS AS NOTED
- ☐ REJECTED - REVISE AND RESUBMIT

Review of shop drawings shall in no way relieve the contractor of responsibility for deviation from requirements of contract documents, nor for errors or omissions in shop drawings. Contractor is responsible for confirming and correlating dimensions at job site, for information which pertains to fabrication processes or construction techniques, for fit of parts when assembled, and for coordination of work of all trades. This review does not supercede or overrule laboratory analysis or test reports.

BY: RLN
DATE: 12-4-78

BINKLEY & HOLMES, INC. Consulting Engineers

- ☒ NO EXCEPTIONS NOTED
- ☐ EXCEPTIONS NOTED
- REVISE AND RESUBMIT FOR DISTRIBUTION
- ☐ RETURNED FOR CORRECTION

Review does not relieve contractor of responsibility for conformity with contract requirements, correct details and fit of parts when assembled.

BINKLEY & HOLMES, INC. BY [illegible] DATE 6/3/76
CITY OF HOUSTON BY RLN DATE 12-4-78

SERIAL NOS. 77030 & 77031
JOB NO. 3304-DS
CONTR. NO. 41277

(2) 14'-0" CAGE MILL FLASH DRYING SYSTEMS
FOR ALMEDA SIMS PLANT
CITY OF HOUSTON, TEXAS

SCALE ½" = 12" | DATE 1-28-76
DRAWN BY [illegible] | CHECKED BY
TRACED BY | APPROVED CWG - 1-28-76

THIS DRAWING IS THE PROPERTY OF COMBUSTION ENGINEERING, INC. AND IS NOT TO BE REPRODUCED, OR USED TO FURNISH ANY INFORMATION FOR MAKING OF DRAWINGS OR APPARATUS EXCEPT WHERE PROVIDED FOR BY AGREEMENT WITH SAID COMPANY.

DRAWING NO. D-SP-703D-2

DWG. NO. 18045 (SHT. NO. 34 OF)

DIETZGEN No. 138-3 AGEPROOF

106'-4"

Outside Face of Filter Room Grade Beam & 16" Sq. Column

See Dryer Room "Structural Slab Plan @ Elev. 54.50" on Sht. No. 74 For Details.

1/2" Premoulded Expansion Joint

Enc. In Conc. 6" D.I. Drain To M.H.

C.O.

F.D. In Elevator Shaft Top Elev. 49.75

NOTE: Details And Reinforcing Steel For Footings And Columns Along Column Line "G" Are Shown With Dryer Room Details.

See Additional Sheet (Relocation of Filtrate Seal Pit) For Continuation of Pipe Trench.

Outside Face of Filter Room Grade Beam.

¢ 16"x 24" Col. And 2'6" ¢ Footing @ Col. Lines "D", "E", "F", & "G"

Floor Slab Note

6" Concrete Floor Slab Reinforced With 6"x 6" 8/8 Welded Wire Mesh Over 8" Sand Stabilized Shell

Top of Pipe Trench Wall Elev. 54.50

El. 49.63

8" M.I. C.I. Drain See Sht. No. 173

All Places Where Pad Base Interferes With Footing Cope The Base With 1/2" Clearance

1/2" x 3/16" Serr. Bar Grating (Galv.) W/ Support & 1 3/4" x 1 9/16" x 1/4" (Typ.)

El. 50.67

Type "1A" Ftg.

Type "1B" Ftg.

Type "1" Ftg.

1/2" Premolded Expansion Joint (Typ. All Around)

1/2" Premolded Exp. Joint (Typ.) All Around Pads

16" x 24" Col. W/ Type "3A" Footing

Floor Drain

8" C.I. Fig. x P.E. Wall Pipe x 24" Long With Blind Flg.

TYP. FLOOR DRAIN DETAIL

Not to Scale

Dry Vacuum Pump No. 1 — 15'-6" x 4'-0"

Wet Vacuum Pump No. 1 — 10'-3" x 4'-0"

Dry Vacuum Pump No. 2 — 13'-6" x 4'-0"

Dry Vacuum Pump No. 3 — 13'-6" x 4'-0"

Wet Vacuum Pump No. 2 — 10'-3" x 4'-0"

Dry Vacuum Pump No. 4 — 13'-6" x 4'-0"

Wet Vacuum Pump No. 3 — 10.5" x 4'-0"

SLOPE 1/8" FT MIN. (TYP.)

Silencer

Typ. Plan For Ea. Dry Vacuum Pump

Typ. Plan For Ea. Wet Vacuum Pump

NOTE: SEE SHEET 169 FOR VACUUM PUMP ARRANGEMENT

For Sections And Details of Dry Vacuum Pump Pads And Wet Vacuum Pump Pads See Sht. No. 36.

NOTE: All Interior Columns To Be 16"x 16" W/ Type "1" Footing, Except As Noted. All Columns to Have 1/2" Premolded Expansion Joint Material All Around.

Top of Wall Elev. 54.25

Elev. 51.50

30"x 48" Grate - Neenah #R-4891-A, Reliance or equal.

Top of Drainage Trench Wall Elev. 54.25

8" C.I.M.J. to San Sewer

Slope

1/2" Premolded Exp. Joint (Typ. All Around)

6" C.I.M.J. G.5%

3-Filter Air Blowers

NOTE: SEE SHEET 169 FOR AIR COMPRESSOR PAD.

P.E.L. 52.50 (TYP.)

Elev. 52.50

Add 10 #5, @ 12" Max. Spa. to Slab Reinf. Under Pads.

Elev. 54.50

3'-1" (Typ.)

3'-1 1/2" (Typ.)

3'-1" x 5'-0" Air Comp. Pad

5'-0" (Typ.)

COMPRESSOR PAD

16" x 24" Grade Beam - See Sht. No. 36 For Detail.

Top of F.D. Elev. 54.25 & EL. 52.61 (TYP.)

1'-5"

3'-2"

10'-0"

1/2" Premolded Exp. Joint (Typ. All Around)

See Floor Drain Detail This Sht.

2'-7" x 4'-10" Plant Water Pump Pad

See Sht. No. 172 For Detail of Plant Water Tank Pad And Reinf. Steel in Pad.

See SHT. 52

Outside Face of Filter Room Grade Beam.

20" Sq. Col. W/ Type "4" Footing

16" x 24" Grade Beam - See Sht. No. 36 For Detail.

20" Sq. Col. W/ Type "4A" Footing

16" Sq. Col. W/ Type "2" Footing

20" Sq. Col. W/ Type "4B" Footing

16" Sq. Col. W/ Type "2" Footing

20" Sq. Col. W/ Type "5" Footing

20" Sq. Col. W/ Type "3" Footing

For Details And Reinforcing Steel in Grade Beams Between Lines "3A" And "4A" See Sht. No. 57

For Continuation of Slab And Details Beyond Line "H" - See Constant Head Tank "Structural Slab Plan @ Elev. 54.50" on Sht. No. 56.

SLAB CONT. ON SHT. 122

STRUCTURAL SLAB PLAN AT ELEVATION 54.50

Scale: 1/4" = 1'-0"

REV. NO.	DATE	DESCRIPTION	DESIGN	CHECKED
4	11-78	Construction Revision Rev. Vacuum Pump Layout	H.J.K.	K.R.L.
3	6-78	Foundation Revisions.	H.J.K.	K.R.L.
2	6-77	Rev. Staircase Pads	J.C.S.	K.R.L.
1	3-77	General Modifications to Dimensions	J.C.S.	S.P.S.
5	11-78	Construction Revision	J.L.R.	H.J.K.

CITY OF HOUSTON
DEPARTMENT OF PUBLIC WORKS

ALMEDA SIMS SLUDGE DISPOSAL PLANT—1973

FILTER ROOM STRUCTURAL SLAB PLAN AT ELEV. 54.50

RECOMMENDED FOR APPROVAL:
Paul R. Holmes
BINKLEY & HOLMES, INC., CONSULTING ENGINEERS

APPROVED:
Walter Hollins — CHIEF ENGINEER — ASST. CHIEF ENGINEER
ASST. DIRECTORS OF PUBLIC WORKS
E.B. Cape
DIRECTOR OF PUBLIC WORKS

DESIGNED BY: K. Jarri
DRAWN BY: G. McVicar
CHECKED BY: M.D.J. & S.P.S.
SCALE: As Shown
DATE: Dec., 1973
SHEET 35 OF 200 SHEETS
DRAWING NO. 18045

STATE OF TEXAS — PAUL R. HOLMES — 27638 — REGISTERED PROFESSIONAL ENGINEER

STATE OF TEXAS — JAMES A. BINKLEY — 24282 — REGISTERED PROFESSIONAL ENGINEER

D-SP-703E	REVISION	2	ADD. I.D. FANS & PIPING, E ADD. MARKS 4-27-78

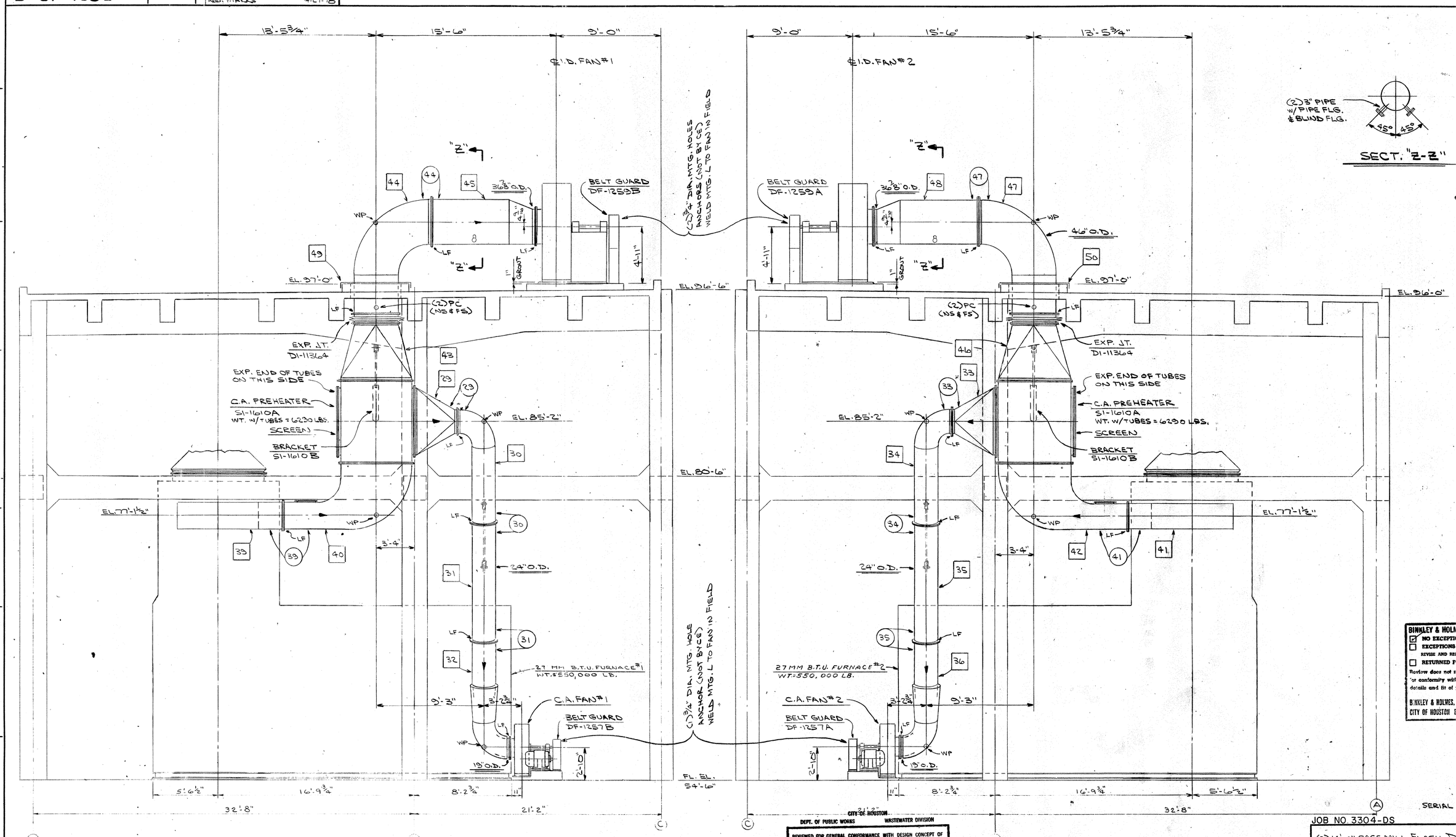

VIEW D-D

VIEW E-E

D-SP-703A — ROOF PLAN
D-SP-703B — LOWER PLAN

BINKLEY & HOLMES, INC. Consulting Engineers
☑ NO EXCEPTIONS NOTED
☐ EXCEPTIONS NOTED
REVISE AND RESUBMIT FOR DISTRIBUTION
☐ RETURNED FOR CORRECTION
Review does not relieve contractor of responsibility for conformity with contract requirements, correct details and fit of parts when assembled.
BINKLEY & HOLMES, INC. BY _____ DATE 4/3/78
CITY OF HOUSTON BY _____ DATE _____

CITY OF HOUSTON
DEPT. OF PUBLIC WORKS WASTEWATER DIVISION
REVIEWED FOR GENERAL CONFORMANCE WITH DESIGN CONCEPT OF PROJECT AND GENERAL COMPLIANCE WITH THE CONTRACT DRAWINGS SPECIFICATIONS, AND DOCUMENTS:
☑ NO EXCEPTION
☐ EXCEPTIONS AS NOTED
☐ REJECTED - REVISE AND RESUBMIT
Review of shop drawings shall in no way relieve the contractor of responsibility for deviation from requirements of contract documents, nor for errors or omissions in shop drawings. Contractor is responsible for confirming and correlating dimensions at job site, for information which pertains to fabrication processes or construction techniques, for fit of parts when assembled, and for coordination of work of all trades. This review does not supercede or overrule laboratory analysis or test reports.
BY: LM
DATE: 12-4-78

ASBUILT SHOP DRAWING

W. W. RECORDS MICROFILM DATE 4/26/78

SERIAL NOS. 77030 & 77031
JOB NO 3304-DS CONTR. NO. 41277

(2) 14'-0" CAGE MILL FLASH DRYING SYSTEMS
FOR ALMEDA SIMS PLANT
CITY OF HOUSTON, TEXAS

SCALE 1/4" = 1'2" DATE 1-28-76
DRAWN BY L CHECKED BY
TRACED BY APPROVED CWC - 1-28-76

THIS DRAWING IS THE PROPERTY OF COMBUSTION ENGINEERING, INC. AND IS NOT TO BE REPRODUCED, OR USED TO FURNISH ANY INFORMATION FOR MAKING OF DRAWINGS OR APPARATUS EXCEPT WHERE PROVIDED FOR BY AGREEMENT WITH SAID COMPANY.

DRAWING NO. D-SP-703E-2

DWG. NO. 18045 (SHT. NO. 35 OF)

DIETZGEN No. 138-3 AGEPROOF

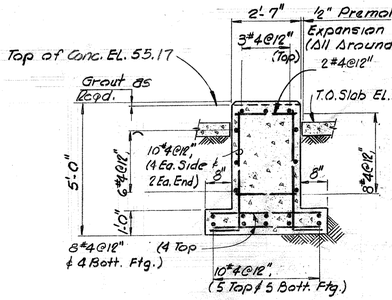

PLANT WATER PUMP FOUNDATION

2'-7" x 4'-10" Lg. (3 Req'd)

Scale: 3/8" = 1'-0"

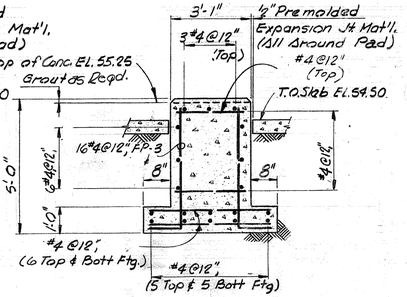

PLANT AIR COMP. FOUNDATION

3'-1" x 5'-0" Lg. (3 Req'd)

Scale: 3/8" = 1'-0"

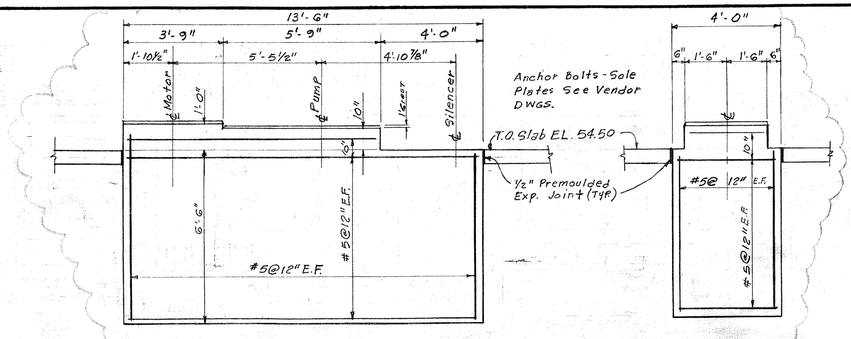

⚠4 DRY VACUUM PUMP FOUNDATION

13'-6" x 4'-0" (4 Req'd)

Scale: 3/8" = 1'-0"

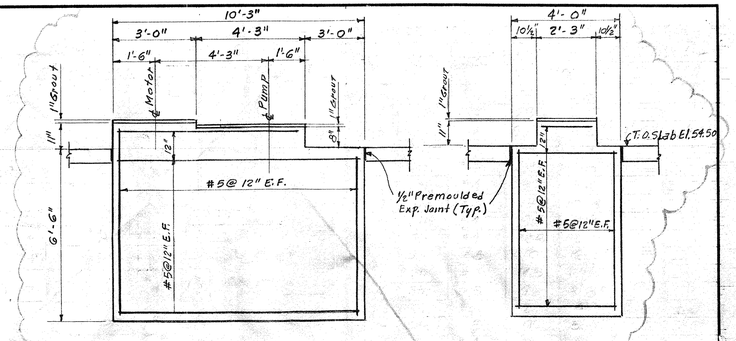

⚠4 WET VACUUM PUMP FOUNDATION

10'-3" x 4'-0" (3 Req'd)

Scale: 3/8" = 1'-0"

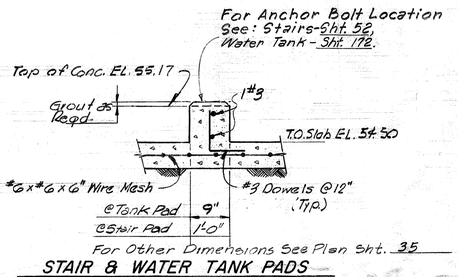

STAIR & WATER TANK PADS

Scale: 3/4" = 1'-0"

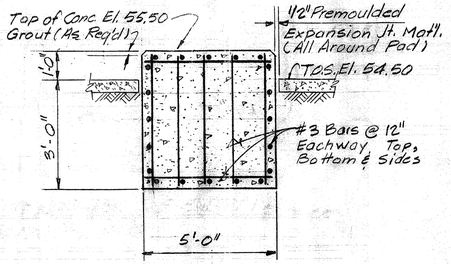

INSTRUMENTATION COMPRESSOR PAD

5'-0" x 6'-6" Lg. (1 Req'd)

Scale: 3/8" = 1'-0"

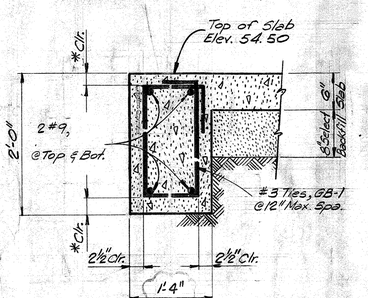

⚠4 * For Grade Beams Running North/South Clearance Shall Be 3" And East/West Clearance Shall Be 1½"

TYPICAL GRADE BEAM SECTION

Scale: 1" = 1'-0"

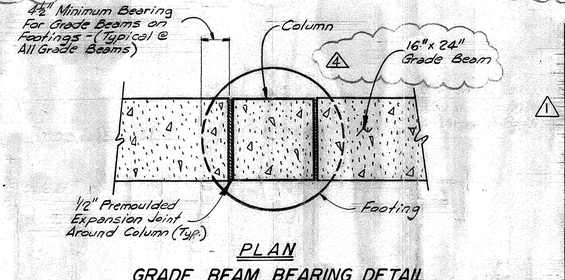

PLAN

GRADE BEAM BEARING DETAIL

Scale: 1" = 1'-0"

GB-1	2	#3	148	6'-0"	1'-7"	0'-9"
GB-2	Str.	#9	8	12'-6"		
GB-3	Str.	#9	20	7'-11"		
GB-4	Str.	#9	8	7'-5"		
GB-5	Str.	#9	8	15'-8"		
GB-6	Str.	#9	4	17'-11"		
GB-7	Str.	#9	4	9'-5"		
Pipe Trench						
PT-1	Str.	#4	230	3'-9"		
PT-2	Str.	#4	4	3'-2"		
PT-3	Str.	#4	4	*102'-1"		
PT-4	Str.	#4	4	7'-8"		
PT-5	Str.	#4	4	*105'-7"		
PT-6	3	#4	5	10'-3"	7'-7"	1'-4"
PT-7	3	#4	6	*108'-2"	*106'-6"	1'-4"
PT-8	3	#4	8	6'-3"	3'-7"	1'-4"
PT-9	3	#4	104	7'-3"	4'-7"	1'-4"
PT-10	1	#4	24	4'-0"	2'-0"	2'-0"
Drainage Trench						
DT-1	Str.	#4	6	*105'-0"		
DT-2	3	#4	4	*108'-9"	*104'-5"	2'-2"
DT-3	3	#4	37	6'-7"	2'-7"	2'-5"
DT-4	3	#4	33	6'-11"	2'-7"	2'-2"
DT-5	3	#4	37	7'-3"	2'-7"	2'-4"

* Includes 2-1'-6" Laps

NOTE:

1.) All Exposed Corners of Concrete to Have 3/4" Chamfer - Unless Noted

2.) For Location of Foundation Pads - See Sht. No. 35.

3.) See Equipment Manufacturer's Drawings For Anchor Bolt Location.

4.) Overall Dimensions Of Concrete Pads To Provide a minimum of 4" Concrete Bolt Cover at edges.

5.) EQUIPMENT FOUNDATION DIMENSION AND ELEVATIONS SHOWN ARE APPROXIMATE AND ARE TO BE ADJUSTED AS REQ'D BY EQUIPMENT FURNISHED

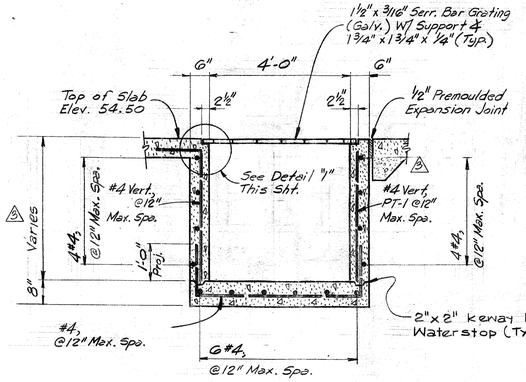

TYPICAL PIPE TRENCH SECTION

Scale: ½" = 1'-0"

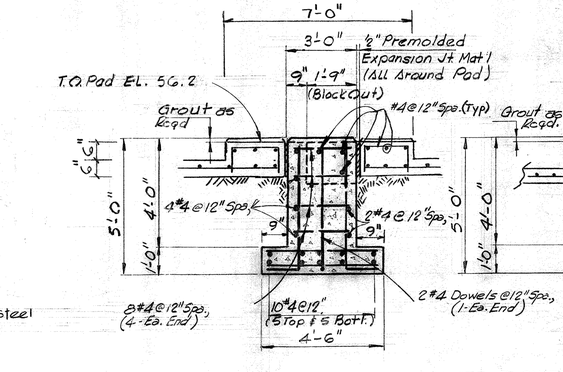

FILTER BLOWER FOUNDATION

2'-6" x 4'-9" Lg. (3 Req'd)

Scale: 3/8" = 1'-0"

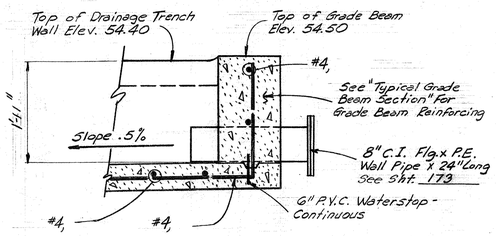

SECTION A / 36

Scale: 3/4" = 1'-0"

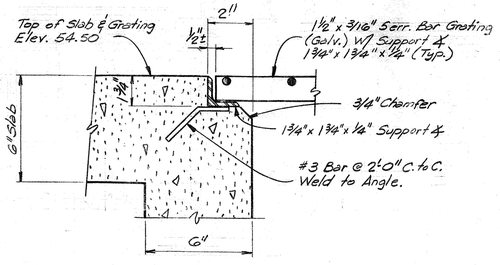

DETAIL "1"

Scale: 3" = 1'-0"

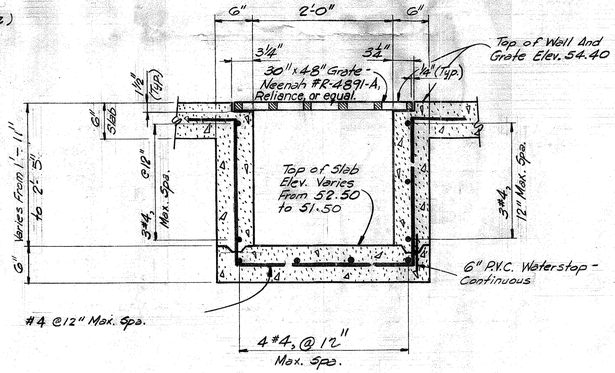

TYPICAL DRAINAGE TRENCH SECTION

Scale: 1" = 1'-0"

REV NO.	DATE	DESCRIPTION	DESIGN	CHECKED
⚠5	6-78	Foundation Revisions.	H.J.K.	K.R.L.
⚠4	6-77	ADD NOTE 5	J.C.S	K.R.L
⚠3	3-77	Bar Marks & Bar Schedule Deleted	J.C.S	S.E.S.
⚠4	11-78	Construction Revision Rev. Vacuum Pump Found.	H.J.K.	K.R.L

JAMES A. BINKLEY 24262 REGISTERED PROFESSIONAL ENGINEER

R. HOLMES 21 REGISTERED PROFESSIONAL ENGINEER

CITY OF HOUSTON
DEPARTMENT OF PUBLIC WORKS

ALMEDA SIMS SLUDGE DISPOSAL PLANT — 1973

FILTER ROOM FOUNDATION PADS AND MISCELLANEOUS DETAILS

RECOMMENDED FOR APPROVAL:
BINKLEY & HOLMES, INC., CONSULTING ENGINEERS

APPROVED:
CHIEF ENGINEER — ASST. CHIEF ENGINEER
ASST. DIRECTORS OF PUBLIC WORKS
DIRECTOR OF PUBLIC WORKS

DESIGNED BY: M. Jafri
DRAWN BY: G.T. RYAN & G. McVicar
CHECKED BY: M.D.T. & S.E.S.
SCALE: As Shown
DATE: Dec. 1973
SHEET 36 OF 200 SHEETS
DRAWING NO. 18045

CITY OF HOUSTON
DEPT. OF PUBLIC WORKS — WASTEWATER DIVISION

REVIEWED FOR GENERAL CONFORMANCE WITH DESIGN CONCEPT OF PROJECT AND GENERAL COMPLIANCE WITH THE CONTRACT DRAWINGS SPECIFICATIONS, AND DOCUMENTS:

- [x] NO EXCEPTION
- [ ] EXCEPTIONS AS NOTED
- [ ] REJECTED - REVISE AND RESUBMIT

Review of shop drawings shall in no way relieve the contractor of responsibility for deviation from requirements of contract documents, nor for errors or omissions in shop drawings. Contractor is responsible for confirming and correlating dimensions at job site, for information which pertains to fabrication processes or construction techniques, for fit of parts when assembled, and for coordination of work of all trades. This review does not supercede or overrule laboratory analysis or test reports.

BY: [signature]
DATE: 12-4-78

BINKLEY & HOLMES, INC. Consulting Engineers
- [x] NO EXCEPTIONS NOTED
- [ ] EXCEPTIONS NOTED
REVISE AND RESUBMIT FOR DISTRIBUTION
- [ ] RETURNED FOR CORRECTION

Review does not relieve contractor of responsibility for conformity with contract requirements, correct details and fit of parts when assembled.

BINKLEY & HOLMES, INC. BY [signature] DATE 6/13/78
CITY OF HOUSTON BY [signature] DATE 12-4-78

SERIAL NOS. 77030 & 77031

JOB NO. 3304-DS CONTRACT NO. 41277

(2) 14'-0" CAGE MILL FLASH DRYING SYSTEMS

FOR
ALMEDA SIMS PLANT
CITY OF HOUSTON, TEXAS

SCALE 1/4" = 1'-0" DATE 4-27-78
DRAWN BY [initials] CHECKED BY [initials]
TRACED BY APPROVED RLM

THIS DRAWING IS THE PROPERTY OF COMBUSTION ENGINEERING, INC.

AND IS NOT TO BE REPRODUCED, OR USED TO FURNISH ANY INFORMATION FOR MAKING OF DRAWINGS OR APPARATUS EXCEPT WHERE PROVIDED FOR BY AGREEMENT WITH SAID COMPANY.

W. W. RECORDS MICROFILM DATE 6/16/82

ASBUILT SHOP DRAWING

DRAWING NO. D-SP-703F-0

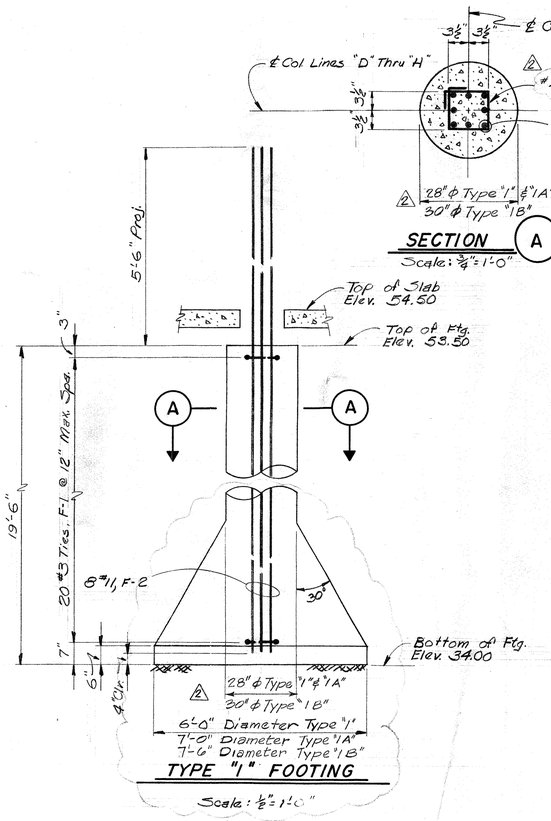

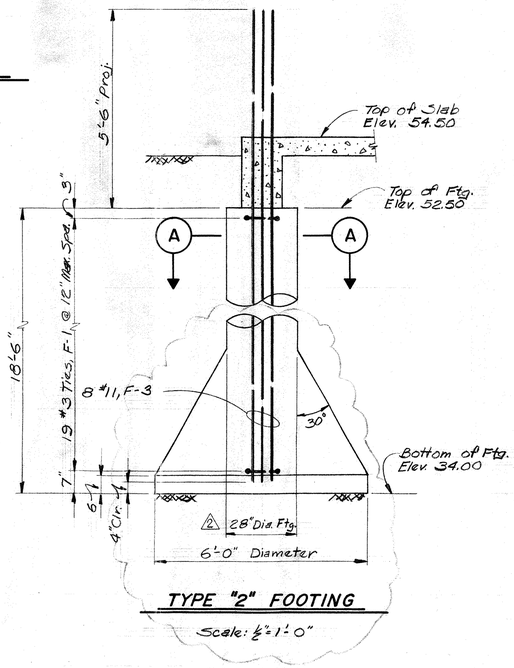

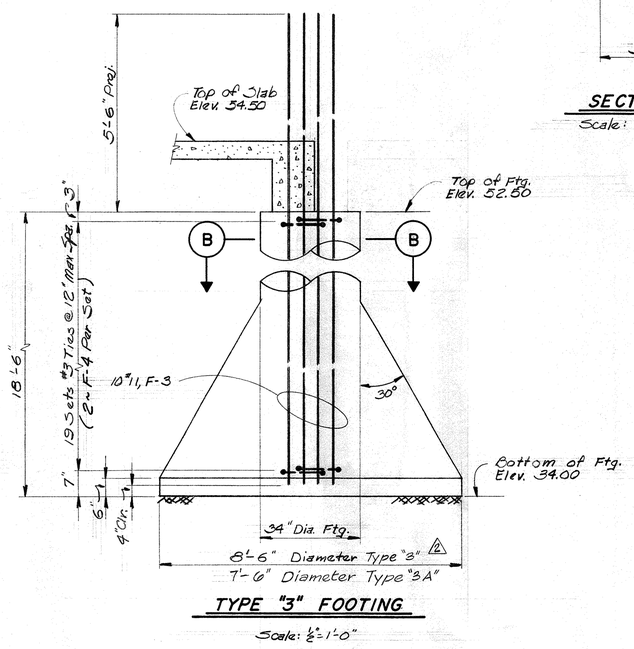

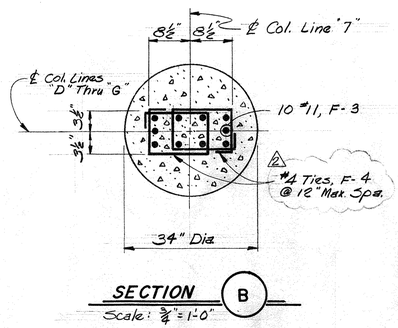

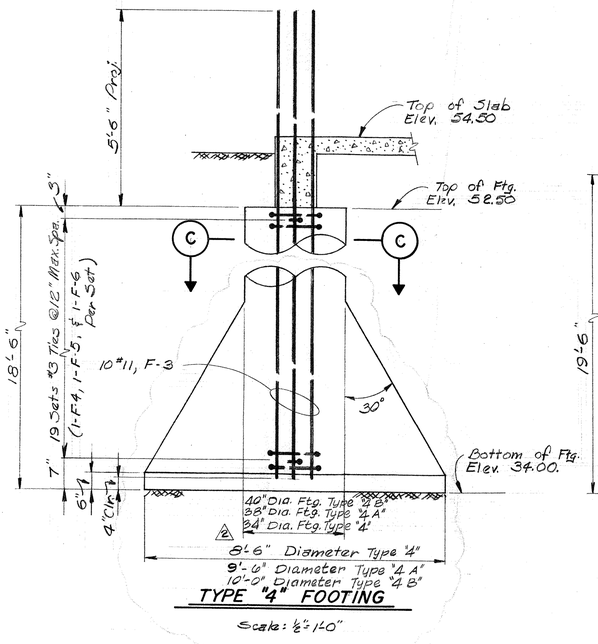

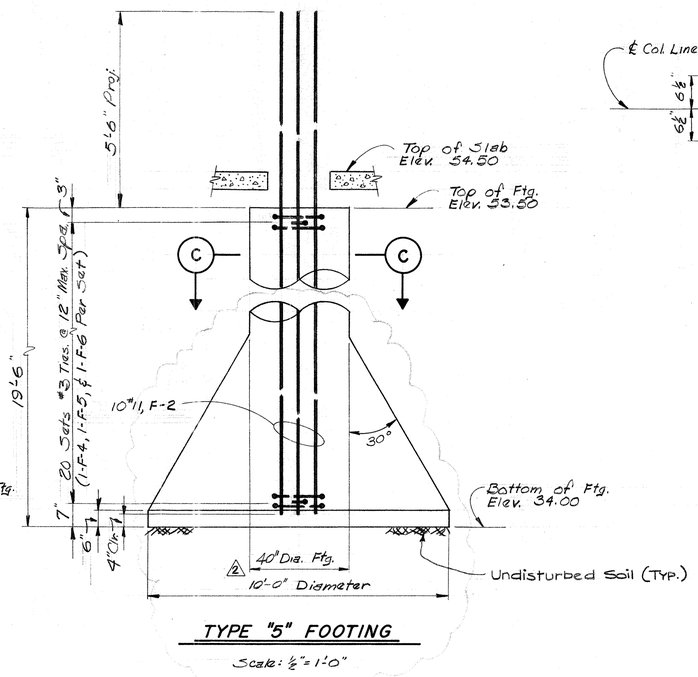

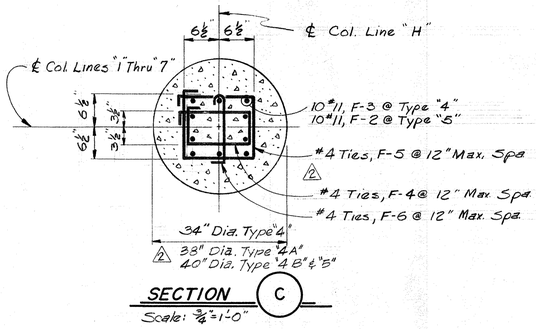

REV. No.	DATE	DESCRIPTION	DESIGN	CHECKED
2	6-78	Construction Revision Rev. Footings	H.U.K.	K.R.L.
1	3-77	Bar Schedule Deleted	J.C.S.	S.R.S.

CITY OF HOUSTON
DEPARTMENT OF PUBLIC WORKS

ALMEDA SIMS
SLUDGE DISPOSAL
PLANT – 1973

FILTER ROOM

FOOTING DETAILS

RECOMMENDED FOR APPROVAL:
BINKLEY & HOLMES, INC., CONSULTING ENGINEERS

APPROVED:
CHIEF ENGINEER — ASST. CHIEF ENGINEER
ASST. DIRECTORS OF PUBLIC WORKS
DIRECTOR OF PUBLIC WORKS

DESIGNED BY: V. Jara
DRAWN BY: E.N. Smith
CHECKED BY: M.D.J. & S.R.S.
SCALE: As Shown
DATE: Dec. 1973
SHEET 37 OF 200 SHEETS
DRAWING NO. 18045

D-SP-703G | REVISIONS

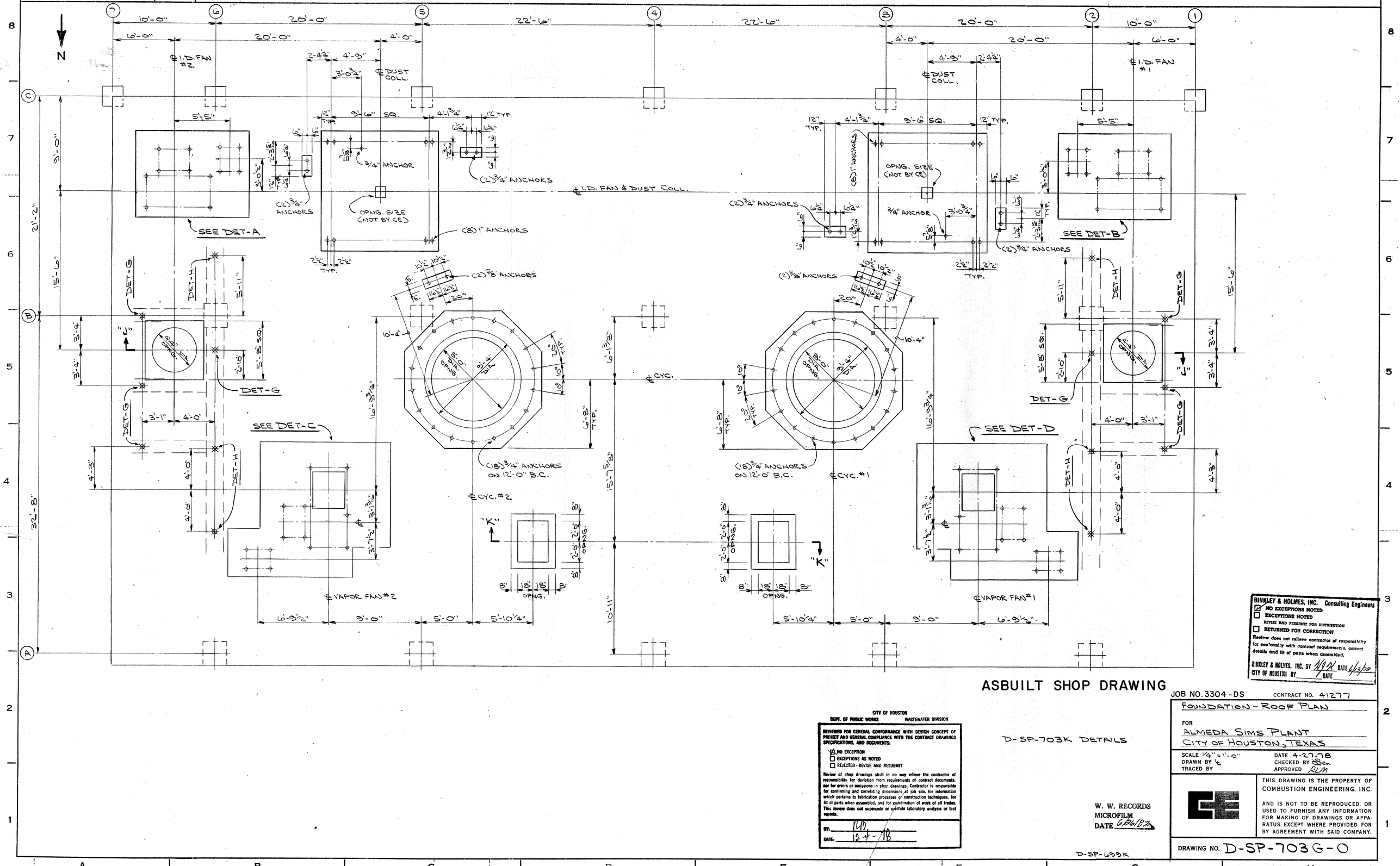

BINKLEY & HOLMES, INC. Consulting Engineers
☒ NO EXCEPTIONS NOTED
☐ EXCEPTIONS NOTED
REVISE AND RESUBMIT FOR DISTRIBUTION
☐ RETURNED FOR CORRECTION
Review does not relieve contractor of responsibility for conformity with contract requirements, correct details and fit of parts when assembled.
BINKLEY & HOLMES, INC. BY _____ DATE 6/3/78
CITY OF HOUSTON BY _____ DATE

ASBUILT SHOP DRAWING

CITY OF HOUSTON
DEPT. OF PUBLIC WORKS — WASTEWATER DIVISION

REVIEWED FOR GENERAL CONFORMANCE WITH DESIGN CONCEPT OF PROJECT AND GENERAL COMPLIANCE WITH THE CONTRACT DRAWINGS SPECIFICATIONS, AND DOCUMENTS:

☒ NO EXCEPTION
☐ EXCEPTIONS AS NOTED
☐ REJECTED - REVISE AND RESUBMIT

Review of shop drawings shall in no way relieve the contractor of responsibility for deviation from requirements of contract documents, nor for errors or omissions in shop drawings. Contractor is responsible for confirming and correlating dimensions at job site, for information which pertains to fabrication processes or construction techniques, for fit of parts when assembled, and for coordination of work of all trades. This review does not supercede or overrule laboratory analysis or test reports.

BY: _____
DATE: 12-4-78

D-SP-703K DETAILS

W. W. RECORDS
MICROFILM
DATE 6/30/78

D-SP-699K

JOB NO. 3304-DS CONTRACT NO. 41277

FOUNDATION - ROOF PLAN

FOR ALMEDA SIMS PLANT
CITY OF HOUSTON, TEXAS

SCALE 1/4" = 1'-0" DATE 4-27-78
DRAWN BY L CHECKED BY Ben
TRACED BY APPROVED RLM

THIS DRAWING IS THE PROPERTY OF COMBUSTION ENGINEERING, INC.

AND IS NOT TO BE REPRODUCED, OR USED TO FURNISH ANY INFORMATION FOR MAKING OF DRAWINGS OR APPARATUS EXCEPT WHERE PROVIDED FOR BY AGREEMENT WITH SAID COMPANY.

DRAWING NO. D-SP-703G-0

DWG. NO. 18045 H (SHT. NO. 37 OF)

POST 126-3

REV. No.	DATE	DESCRIPTION	DESIGN
1	3-77	General Revisions	J.C.S.
2	6-77	Dimension Change	J.C.S. K.
3	6-78	Foundation Revisions	H.J.K. K.R.L.
4	10-78	Construction Revisions Sect. F To Reflect 16"x30" Girders - Change Col. Ties From #3 To #4	J.L.R. H.J.K

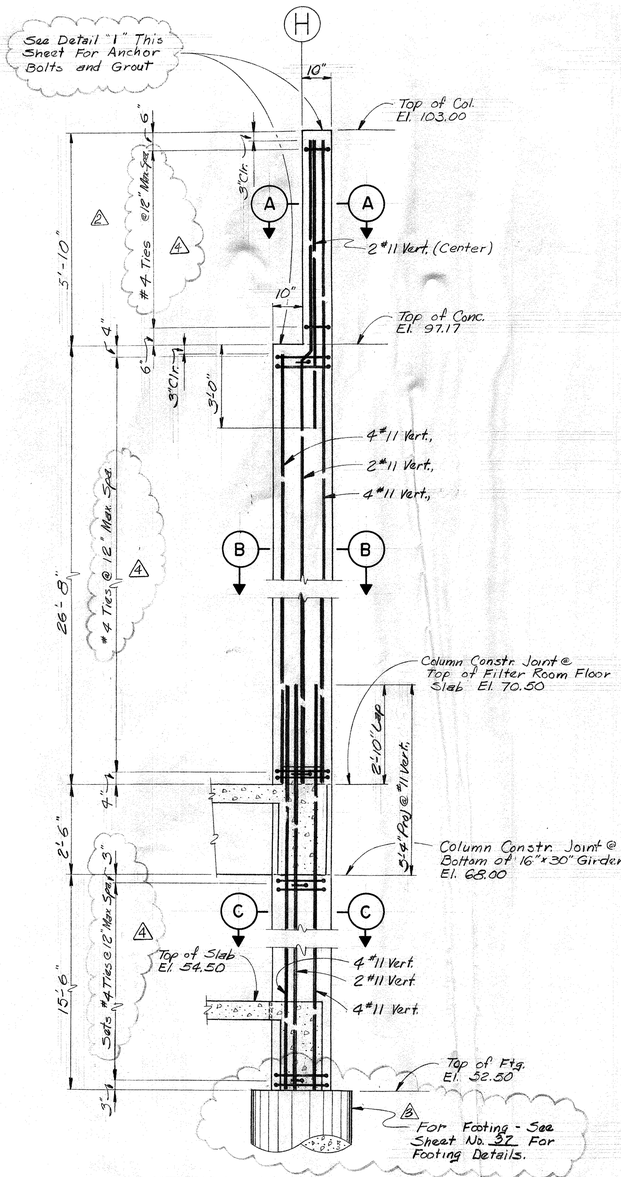

ELEVATION AT COLUMNS H-1, H-2, H-3

Scale: 1/2"=1'-0"

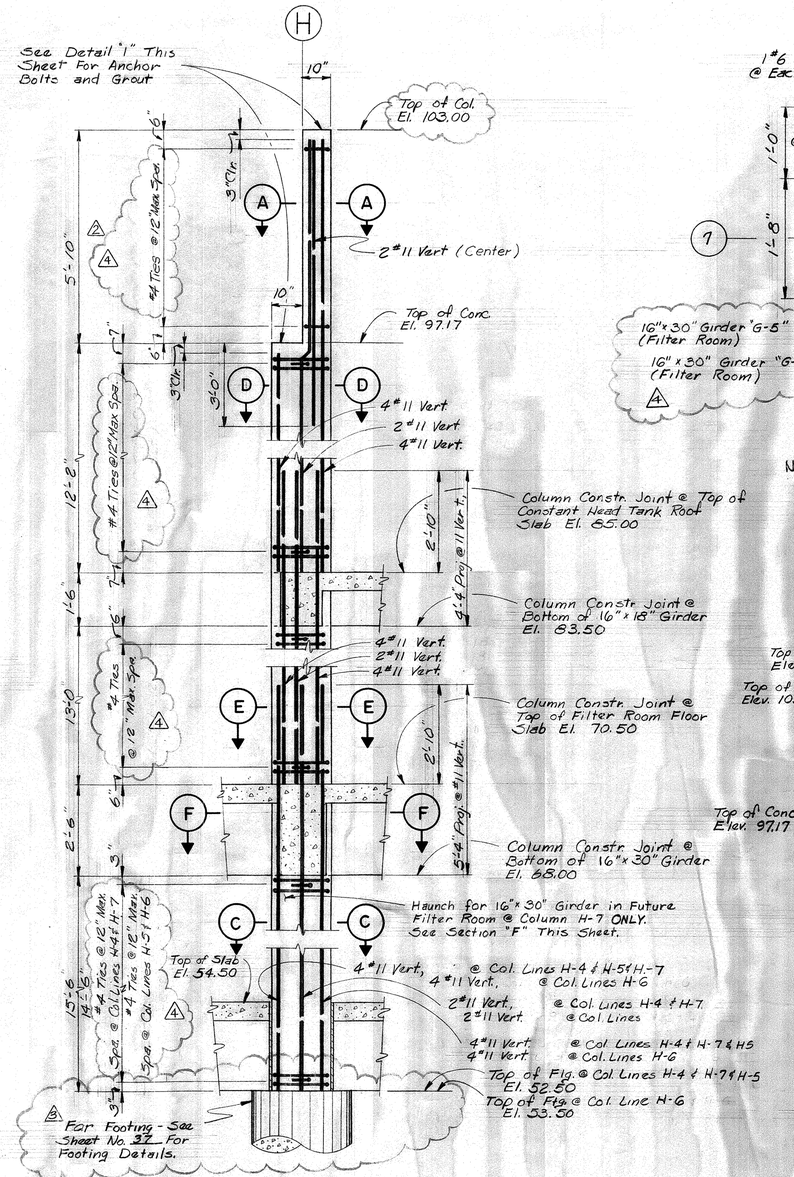

ELEVATION AT COLUMNS H-4, H-5, H-6 & H-7

Scale: 1/2"=1'-0"

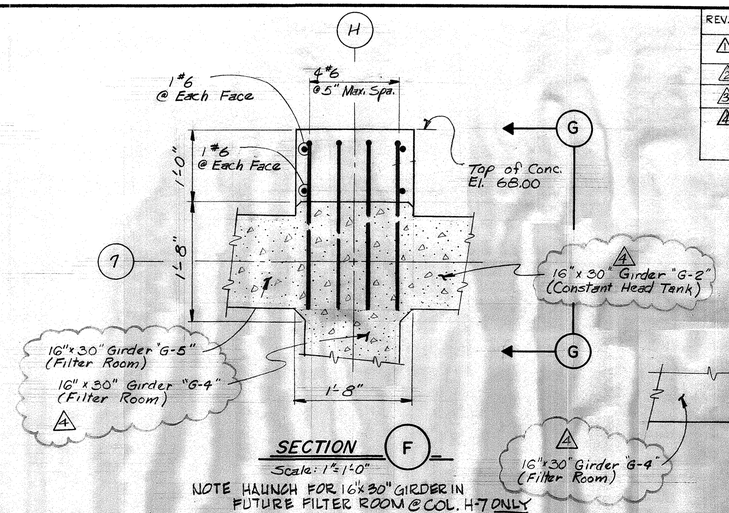

SECTION F

Scale: 1"=1'-0"

NOTE HAUNCH FOR 16"x30" GIRDER IN FUTURE FILTER ROOM @ COL. H-7 ONLY

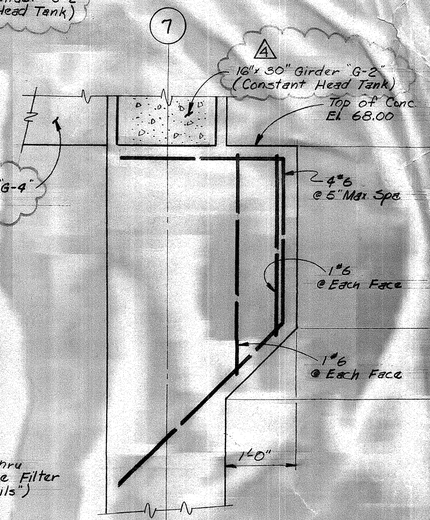

SECTION G

Scale: 1"=1'-0"

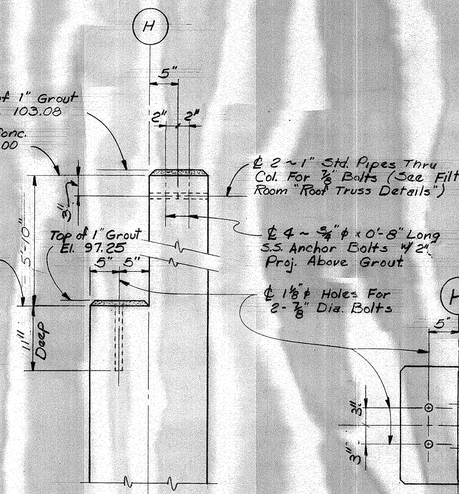

DETAIL "1"

Scale: 1"=1'-0"

(This Detail Typical @ All 20" Sq. Columns on Line "H")

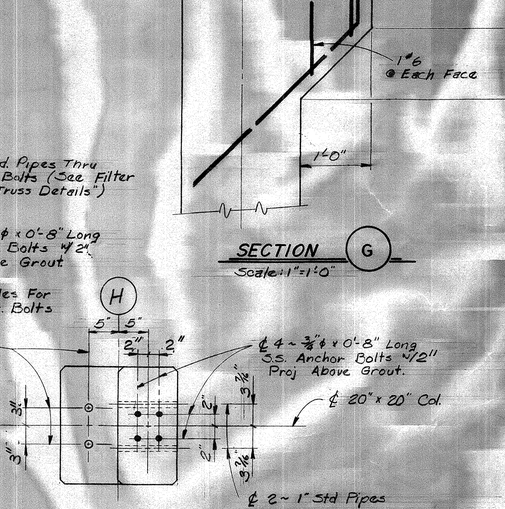

PLAN AT DETAIL "1"

Scale: 1"=1'-0"

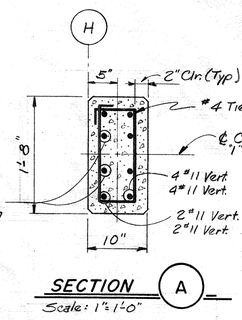

SECTION A

Scale: 1"=1'-0"

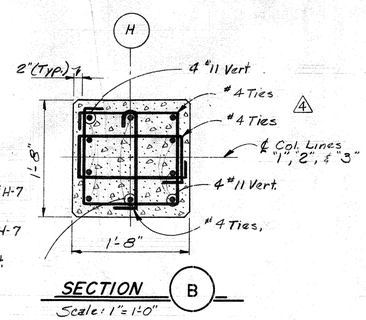

SECTION B

Scale: 1"=1'-0"

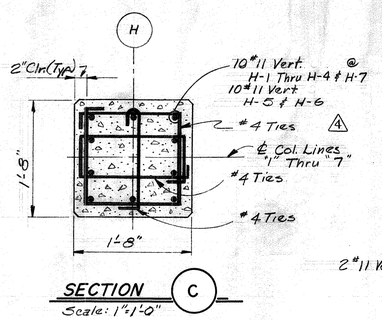

SECTION C

Scale: 1"=1'-0"

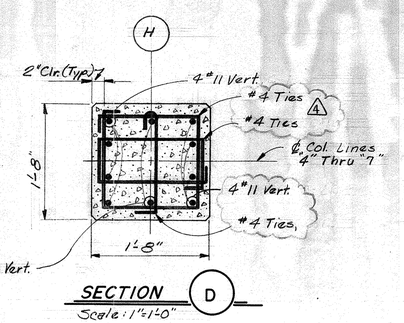

SECTION D

Scale: 1"=1'-0"

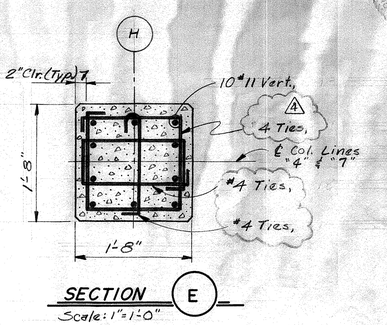

SECTION E

Scale: 1"=1'-0"

CITY OF HOUSTON
DEPARTMENT OF PUBLIC WORKS

ALMEDA SIMS SLUDGE DISPOSAL PLANT - 1973

FILTER ROOM COLUMN DETAILS

RECOMMENDED FOR APPROVAL:
BINKLEY & HOLMES, INC., CONSULTING ENGINEERS

APPROVED:
Walter Williams
CHIEF ENGINEER — ASST. CHIEF ENGINEER
ASST. DIRECTORS OF PUBLIC WORKS
DIRECTOR OF PUBLIC WORKS

DESIGNED BY: V. Jarri
DRAWN BY: E.N. Smith
CHECKED BY: MBJ & S.R.S.
SCALE: As Shown
DATE: Dec. 1973
SHEET 38 OF 200 SHEETS
DRAWING NO. 18045

D-SP-703G

REVISIONS		
1	DET. A & B: 2'-10" WAS 3'-0½"	L 11-29-78
2	REV. DUST COLL. & ROOF OPNGS.	L 1-11-79

N

#I.D. FAN #2

#I.D. FAN #1

#DUST COLL.

#I.D. FAN & DUST COLL.

#CYC.

#CYC. #1

#CYC. #2

#VAPOR FAN #2

#VAPOR FAN #1

SEE DET-A

SEE DET-B

SEE DET-C

SEE DET-D

DET-G

DET-H

(8) 1" ANCHORS

(2) 3/4" ANCHORS

3/4" ANCHOR

12" DIA. OPNG.

(2) 5/8" ANCHORS

(18) 3/4" ANCHORS ON 12'-0" B.C.

OPNG.

CITY OF HOUSTON
DEPT. OF PUBLIC WORKS — WASTEWATER DIVISION

REVIEWED FOR GENERAL CONFORMANCE WITH DESIGN CONCEPT OF PROJECT AND GENERAL COMPLIANCE WITH THE CONTRACT DRAWINGS, SPECIFICATIONS, AND DOCUMENTS.

- [x] NO EXCEPTION
- [ ] EXCEPTIONS AS NOTED
- [ ] REJECTED - REVISE AND RESUBMIT

Review of shop drawings shall in no way relieve the contractor of responsibility for deviation from requirements of contract documents, nor for errors or omissions in shop drawings. Contractor is responsible for confirming and correlating dimensions at job site, for information which pertains to fabrication processes or construction techniques, for fit of parts when assembled, and for coordination of work of all trades. This review does not supersede or overrule laboratory analysis or test reports.

BY: _____

DATE: 2-3-79

ASBUILT SHOP DRAWING

JOB. NO. 3304-DS CONTRACT NO. 41277

FOUNDATION - ROOF PLAN

FOR ALMEDA SIMS PLANT
CITY OF HOUSTON, TEXAS

SCALE 1/4" = 1'-0" DATE 4-27-78
DRAWN BY L CHECKED BY Ben
TRACED BY APPROVED RLM

D-SP-703K DETAILS

BINKLEY & HOLMES, INC. Consulting Engineers
- [x] NO EXCEPTIONS NOTED
- [ ] EXCEPTIONS NOTED
  REVISE AND RESUBMIT FOR DISTRIBUTION
- [ ] RETURNED FOR CORRECTION

Review does not relieve contractor of responsibility for conformity with contract requirements, correct details and fit of parts when assembled.

BINKLEY & HOLMES, INC. BY _____ DATE 1/9/79
CITY OF HOUSTON BY _____ DATE 2-3-79

W. W. RECORDS
MICROFILM
DATE 6/26/82

D-SP-699K

THIS DRAWING IS THE PROPERTY OF COMBUSTION ENGINEERING, INC.

AND IS NOT TO BE REPRODUCED, OR USED TO FURNISH ANY INFORMATION FOR MAKING OF DRAWINGS OR APPARATUS EXCEPT WHERE PROVIDED FOR BY AGREEMENT WITH SAID COMPANY.

DRAWING NO. D-SP-703G-2

DWG. NO. 18045 H (SHT. NO. 38 OF)

POST 126-3

D-SP-703H | REVISIONS

N

10'-0" | 20'-0" | 22'-6" | 22'-6" | 20'-0" | 10'-0"

℄ C.A. FAN #2

SEE DET-E

℄ FURNACE #2

OIL PUMP

(4) 3/4" ANCHORS

℄ FURNACE #1

SEE DET-F

℄ C.A. FAN #1

(16) 3/4" ANCHORS

15 SPCS. @ 4'-8" = 23'-4"

(16) 3/4" ANCHORS

(16) 3/4" ANCHORS

8'-9" GROOVE

8'-9" GROOVE

DRAIN PIPE

DRAIN PIPE

℄ CAGE MILL #2

℄ CAGE MILL #1

CITY OF HOUSTON
DEPT. OF PUBLIC WORKS — WASTEWATER DIVISION

REVIEWED FOR GENERAL CONFORMANCE WITH DESIGN CONCEPT OF PROJECT AND GENERAL COMPLIANCE WITH THE CONTRACT DRAWINGS SPECIFICATIONS, AND DOCUMENTS:

☒ NO EXCEPTION
☐ EXCEPTIONS AS NOTED
☐ REJECTED - REVISE AND RESUBMIT

Review of shop drawings shall in no way relieve the contractor of responsibility for deviation from requirements of contract documents, nor for errors or omissions in shop drawings. Contractor is responsible for confirming and correlating dimensions at job site, for information which pertains to fabrication processes or construction techniques, for fit of parts when assembled, and for coordination of work of all trades. This review does not supercede or overrule laboratory analysis or test reports.

BY: RJB
DATE: 12-4-78

BINKLEY & HOLMES, INC. Consulting Engineers
☒ NO EXCEPTIONS NOTED
☐ EXCEPTIONS NOTED
REVISE AND RESUBMIT FOR DISTRIBUTION
☐ RETURNED FOR CORRECTION
Review does not relieve contractor of responsibility for conformity with contract requirements, correct details and fit of parts when assembled.
BINKLEY & HOLMES, INC. BY RJB DATE 6/13/78
CITY OF HOUSTON BY RJB DATE 12-4-78

D-SP-703K DETAILS

W. W. RECORDS MICROFILM DATE 6/26/79

JOB NO. 3304-DS CONTRACT NO. 41277

FOUNDATION - FLOOR PLAN

FOR
ALMEDA SIMS PLANT
CITY OF HOUSTON, TEXAS

SCALE 1/2"=1'-0" DATE 4-20-78
DRAWN BY E CHECKED BY Ben
TRACED BY APPROVED RCM

THIS DRAWING IS THE PROPERTY OF COMBUSTION ENGINEERING, INC.
AND IS NOT TO BE REPRODUCED, OR USED TO FURNISH ANY INFORMATION FOR MAKING OF DRAWINGS OR APPARATUS EXCEPT WHERE PROVIDED FOR BY AGREEMENT WITH SAID COMPANY.

ASBUILT SHOP DRAWING

DRAWING NO. D-SP-703H-0

DWG. NO. 18045 H (SHT. NO. 39 OF)

POST 126-3

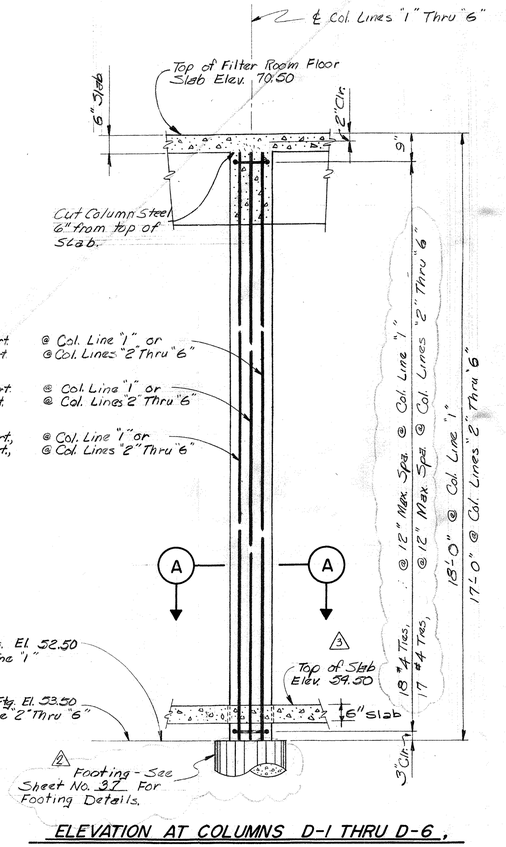

ELEVATION AT COLUMNS D-1 THRU D-6, E-1 THRU E-6, F-1 THRU F-6, & G-1 THRU G-6

Scale: ½"=1'-0"

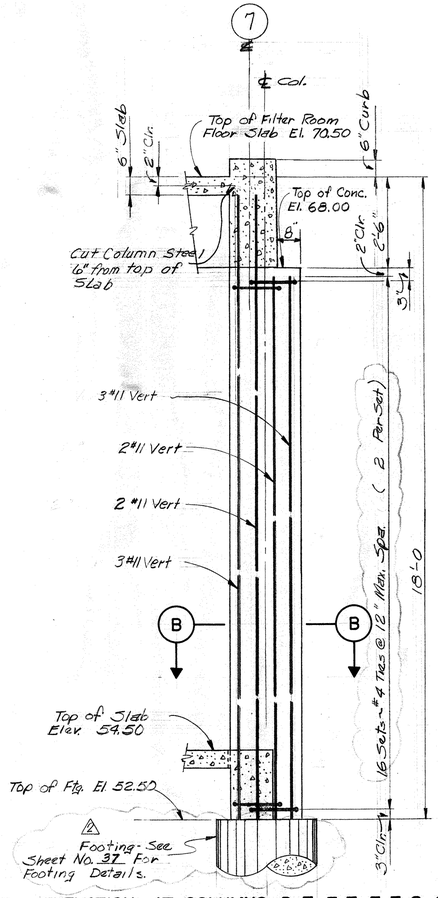

ELEVATION AT COLUMNS D-7, E-7, F-7, & G-7

Scale: ½"=1'-0"

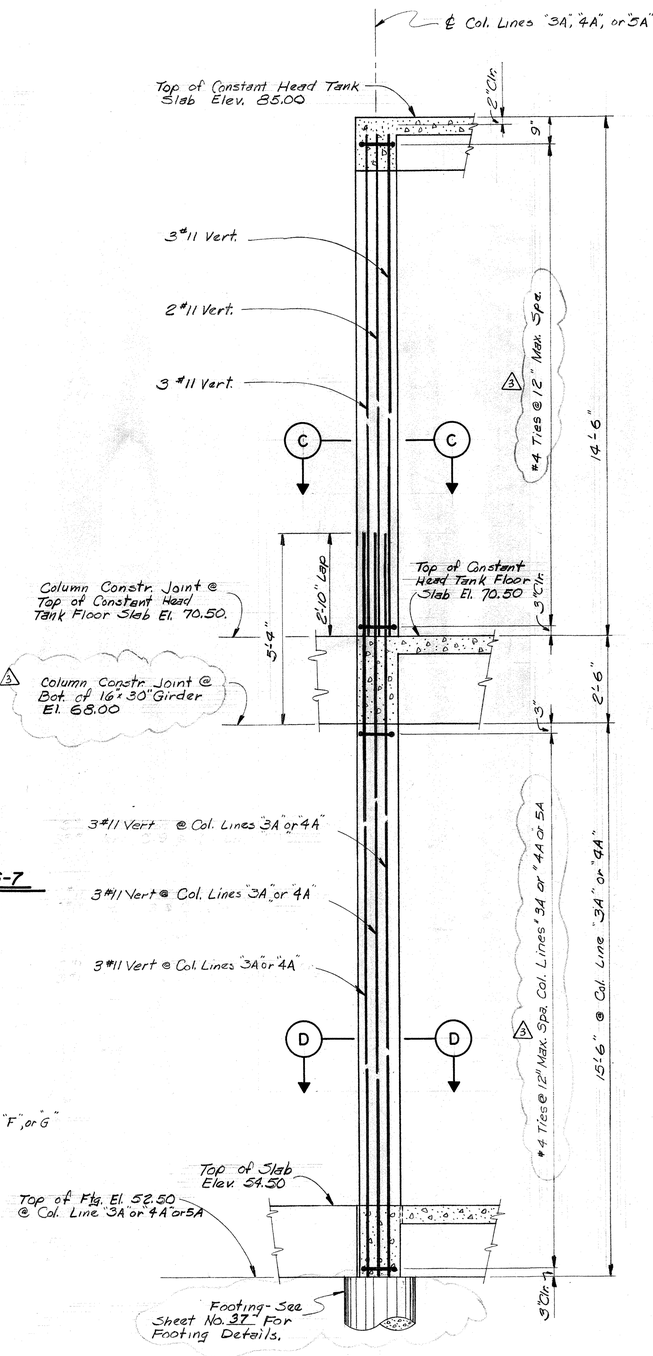

ELEVATION AT COLUMNS H-3A, H-4A, & H-5A

Scale: ½"=1'-0"

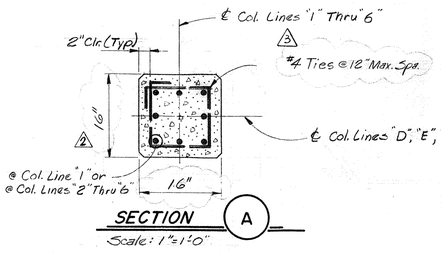

SECTION A

Scale: 1"=1'-0"

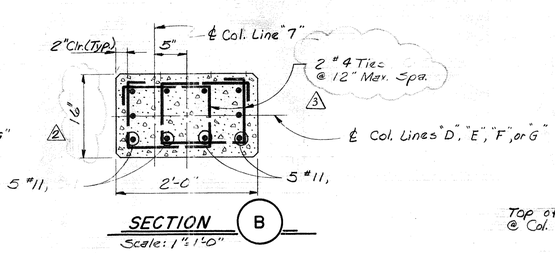

SECTION B

Scale: 1"=1'-0"

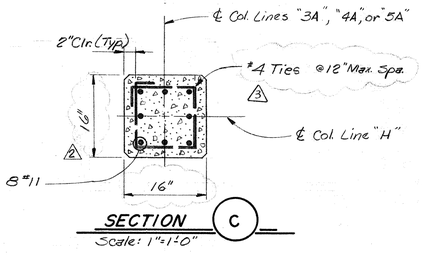

SECTION C

Scale: 1"=1'-0"

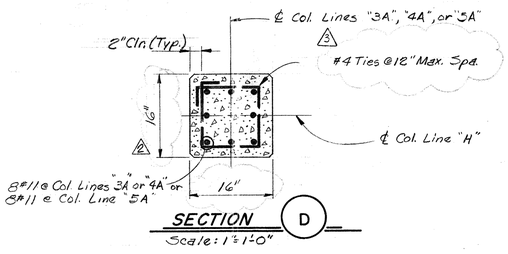

SECTION D

Scale: 1"=1'-0"

REINFORCING STEEL SCHEDULE FOR FILTER ROOM COLUMNS

MARK	TYPE	SIZE	NO. REQ'D.	LENGTH PER BAR	BENT BAR DIM. "A"	"B"
C-1	Str.	#11	52	17'-10"		
C-2	Str.	#11	160	16'-10"		
C-3	1	#3	504	4'-0"	0'-10"	0'-10"
C-4	OMITTED					
C-5	1	#3	128	4'-8"	1'-2"	0'-10"
C-6	Str.	#11	20	15'-4"		
C-7	Str.	#11	24	14'-4"		
C-8	Str.	#11	66	20'-10"		
C-9	Str.	#11	28	19'-10"		
C-10	1	#3	42	4'-4"	1'-4"	0'-6"
C-11	1	#3	295	6'-0"	1'-4"	1'-4"
C-12	1	#3	287	4'-6"	1'-4"	0'-7"
C-13	2	#3	895	2'-5"	1'-4"	
C-14	Str.	#11	12	26'-5"		
C-15	3	#11	6	32'-6"	As Shown	
C-16	Str.	#11	12	32'-5"		
C-17	Str.	#11	14	8'-9"		
C-18	Str.	#11	40	17'-4"		
C-19	Str.	#11	16	11'-11"		
C-20	3	#11	8	18'-0"	As Shown	
C-21	Str.	#11	16	17'-11"		
C-22	Str.	#6	2	2'-4"		
C-23	Str.	#6	2	2'-10"		
C-24	4	#6	4	7'-9"	As Shown	

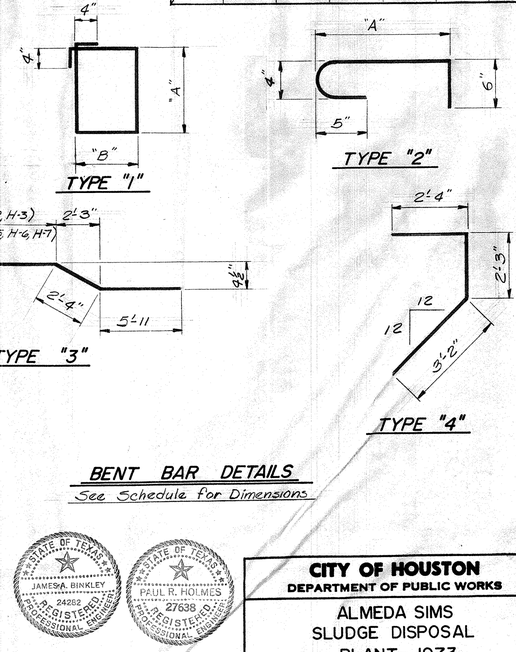

BENT BAR DETAILS

See Schedule for Dimensions

STATE OF TEXAS JAMES A. BINKLEY 24262 REGISTERED PROFESSIONAL ENGINEER

STATE OF TEXAS PAUL R. HOLMES 27638 REGISTERED PROFESSIONAL ENGINEER

CITY OF HOUSTON
DEPARTMENT OF PUBLIC WORKS

ALMEDA SIMS SLUDGE DISPOSAL PLANT—1973

FILTER ROOM COLUMN DETAILS

RECOMMENDED FOR APPROVAL:
BINKLEY & HOLMES, INC., CONSULTING ENGINEERS

APPROVED:
CHIEF ENGINEER
ASST. CHIEF ENGINEER
ASST. DIRECTORS OF PUBLIC WORKS
DIRECTOR OF PUBLIC WORKS

DESIGNED BY: V. Jafri
DRAWN BY: E.N. Smith
CHECKED BY: M.B.J. & S.R.S.
SCALE: As Shown
DATE: Dec., 1973
SHEET 33 OF 200 SHEETS
DRAWING NO. 18045

REV. NO.	DATE	DESCRIPTION	DESIGN	CHECKED
3	11-78	Construction Revisions Deleted Bar Schedule Changed Ties From #3 To #4 Corrected Girder Ref. To 16x30"	J.L.R.	H.J.K.
2	6-78	Foundation Revisions	H.J.K.	K.R.L.
1	3-77	General Revisions	J.C.S.	S.R.S.

REINFORCING STEEL SCHEDULE FILTER ROOM, FLOOR SLAB

MARK	TYPE	SIZE	NO. REQ'D	LENGTH PER BAR	BENT BAR DIM. "A"	"B"
FF-1	Str.	#6	10	86'-5"	★	
FF-2	Str.	#6	50	108'-8"	★	
FF-3	1	#6	156	3'-5"	2'-5"	1'-2"
FF-4	Str.	#4	208	14'-3"		
FF-5	Str.	#4	32	10'-3"		
FF-6	Str.	#6	100	9'-0"		
FF-7	Str.	#6	64	9'-6"		
FF-8	Str.	#4	144	6'-10"		
FF-9	Str.	#4	32	5'-9"		
FF-10	Str.	#6	16	10'-0"		
FF-11	Str.	#8	6	5'-0"		
FF-12	Str.	#4	172	17'-6"		
FF-13	Str.	#4	28	11'-8"		
FF-14	Str.	#6	402	4'-6"		
FF-15	2	#4	84	3'-11"	1'-6"	0'-11"
FF-16	Str.	#4	2	0'-9"		
FF-17	Str.	#4	6	8'-1"		
FF-18	Str.	#4	2	18'-1"		
FF-19	2	#4	19	4'-3"	1'-9"	0'-11"
FF-20	Str.	#4	2	59'-1"	★	
FF-21	Str.	#4	2	93'-7"	★	
FF-22	Str.	#6	312	Varies		

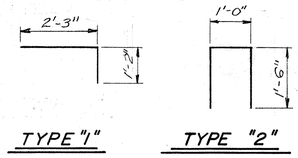

TYPE "1" TYPE "2"

BENT BAR DETAILS

NOTE: 6" High Curb along Col. Line 7 of Filter Room, To Be Class "B" Conc. For Future Addition.

Indicates 6" High Curb.

Indicates 9" High Curb.

For Pipe Openings in Slab See Sht. 45

For Anchor Bolts location See Sht. 45

STRUCTURAL PLAN
ELEV.- 70.50
Scale: 1/4"=1'-0"

SECTION (A)
Scale: 3/4"=1'-0"

SECTION (B)

NOTE: For Anchor Bolt Location & Size See Sheet No 45

NOTE: Jib Crane Floor Plate Mounted 1,000 lb. Capacity. 180° Rotation w/12'-0" Boom.

REV. NO.	DATE	DESCRIPTION	DESIGN	CHECKED
4	3-79	Construction Revision Made all Filter Openings Symmetrical and Typical Added Anchor Bolt Locations	W.G.W.	H.J.K.
3	11-78	Construction Revision Delete Bar Schedule Change G-3 & G-5 To 16'x 30" Change B-5 To 14'x 30" Add B-7 Change B-6A & B-8 To 16'x30" Rev. Sect. A & B To Reflect 16'x 30 Girder	J.L.R.	H.J.K.
2	6-77	Rev. Stair Case	J.C.S.	K.R.L
1	3-77	General Revisions	J.C.S.	S.R.S.

CITY OF HOUSTON
DEPARTMENT OF PUBLIC WORKS

ALMEDA SIMS
SLUDGE DISPOSAL
PLANT—1973

FILTER ROOM
STRUCTURAL PLAN
ELEV. — 70.50

RECOMMENDED FOR APPROVAL:
BINKLEY & HOLMES, INC., CONSULTING ENGINEERS

APPROVED:
CHIEF ENGINEER — ASST. CHIEF ENGINEER
ASST. DIRECTORS OF PUBLIC WORKS
DIRECTOR OF PUBLIC WORKS

DESIGNED BY: V. Jain
DRAWN BY: E.N. Smith
CHECKED BY: M.D.H. & S.R.S.
SCALE: As Shown
DATE: Dec. 1973
SHEET 40 OF 200 SHEETS
DRAWING NO. 18045

STATE OF TEXAS — JAMES A. BINKLEY — 24262 — REGISTERED PROFESSIONAL ENGINEER
STATE OF TEXAS — PAUL R. HOLMES — 27638 — REGISTERED PROFESSIONAL ENGINEER

D-SP-703J | REVISIONS

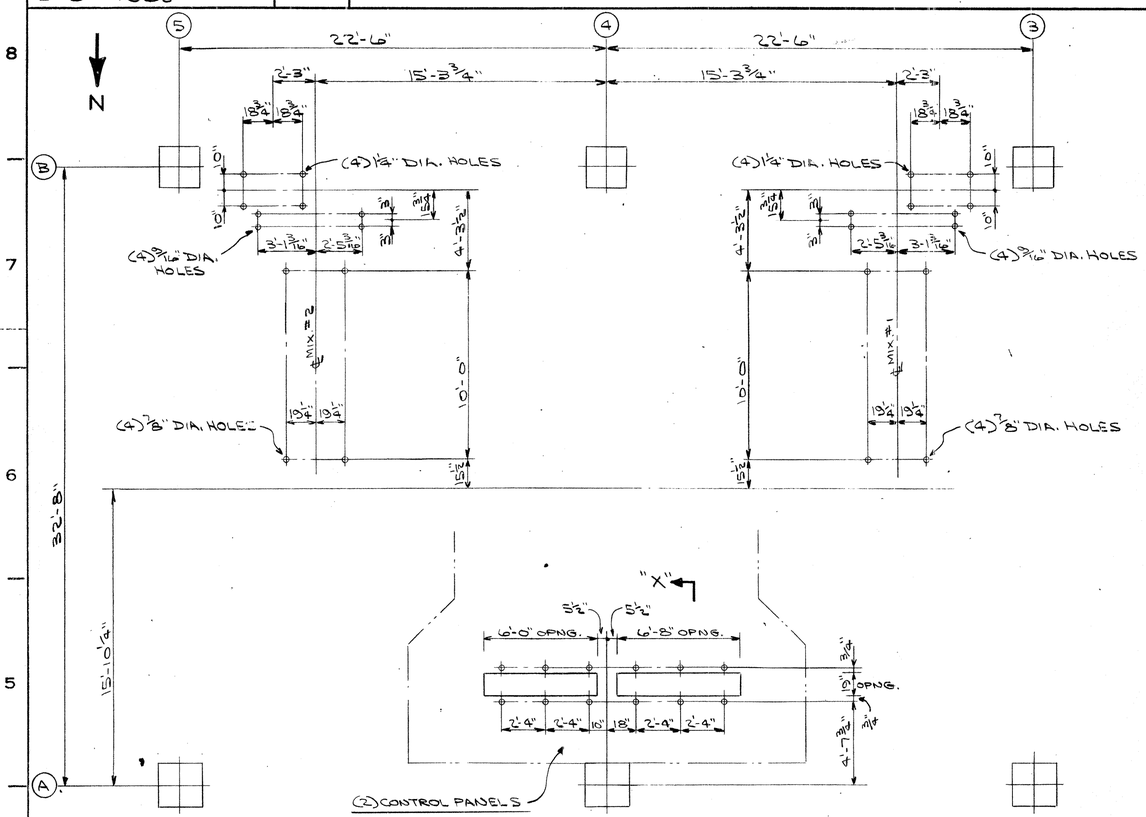

PLAN VIEW
T/ PLAT. STL. EL. 66'-8 1/2"

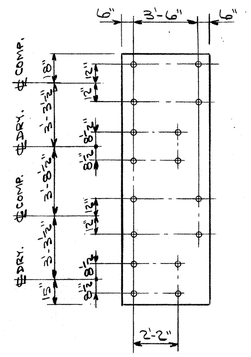

PLAN
AIR COMPRESSORS & AIR DRYERS

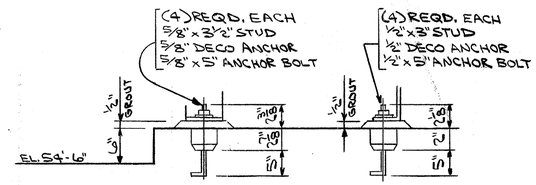

(2) AIR COMP. (2) AIR DRYER

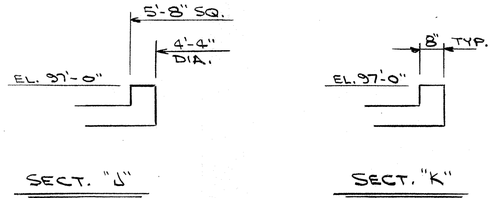

SECT. "J" SECT. "K"

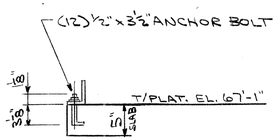

SECT. "X"

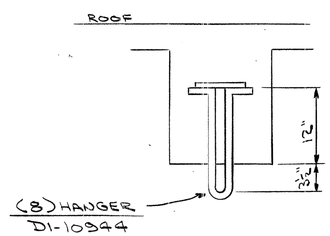

DET-G

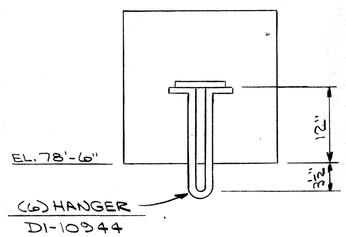

DET-H

CITY OF HOUSTON
DEPT. OF PUBLIC WORKS — WASTEWATER DIVISION

REVIEWED FOR GENERAL CONFORMANCE WITH DESIGN CONCEPT OF PROJECT AND GENERAL COMPLIANCE WITH THE CONTRACT DRAWINGS SPECIFICATIONS, AND DOCUMENTS.

- ☑ NO EXCEPTION
- ☐ EXCEPTIONS AS NOTED
- ☐ REJECTED - REVISE AND RESUBMIT

Review of shop drawings shall in no way relieve the contractor of responsibility for deviation from requirements of contract documents, nor for errors or omissions in shop drawings. Contractor is responsible for confirming and correlating dimensions at job site, for information which pertains to fabrication processes or construction techniques, for fit of parts when assembled, and for coordination of work of all trades. This review does not supercede or overrule laboratory analysis or test reports.

BY: [illegible]
DATE: 12-4-78

ASBUILT SHOP DRAWING

BINKLEY & HOLMES, INC. Consulting Engineers
- ☑ NO EXCEPTIONS NOTED
- ☐ EXCEPTIONS NOTED — REVISE AND RESUBMIT FOR DISTRIBUTION
- ☐ RETURNED FOR CORRECTION

Review does not relieve contractor of responsibility for conformity with contract requirements, correct details and fit of parts when assembled.

BINKLEY & HOLMES, INC. BY [illegible] DATE 6/13/80
CITY OF HOUSTON BY [illegible] DATE 12-4-78

JOB NO. 3304-DS CONTRACT NO. 41277

FOUNDATION - PLAN & DETAILS

FOR ALMEDA SIMS PLANT
CITY OF HOUSTON, TEXAS

SCALE 1/4"=1'-0" DATE 4-27-78
DRAWN BY L CHECKED BY [illegible]
TRACED BY APPROVED RLM

THIS DRAWING IS THE PROPERTY OF COMBUSTION ENGINEERING, INC.

AND IS NOT TO BE REPRODUCED, OR USED TO FURNISH ANY INFORMATION FOR MAKING OF DRAWINGS OR APPARATUS EXCEPT WHERE PROVIDED FOR BY AGREEMENT WITH SAID COMPANY.

DRAWING NO. D-SP-703J-0

W. W. RECORDS
MICRO-FILM
DATE 4/26/82

DWG. NO. 18045 H (SHT. NO. 40 OF)

POST 126-3

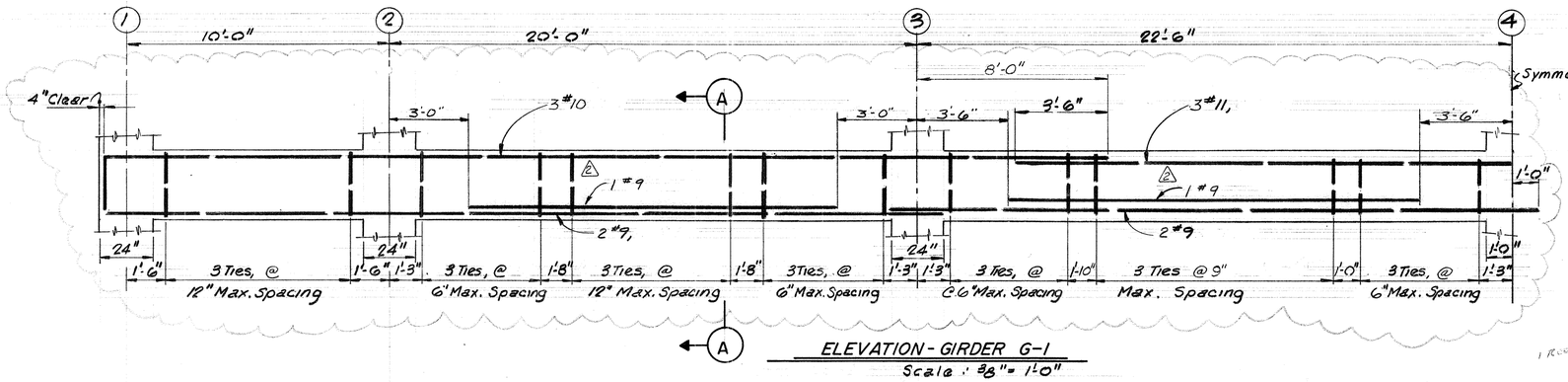

ELEVATION - GIRDER G-1

Scale : 3/8" = 1'-0"

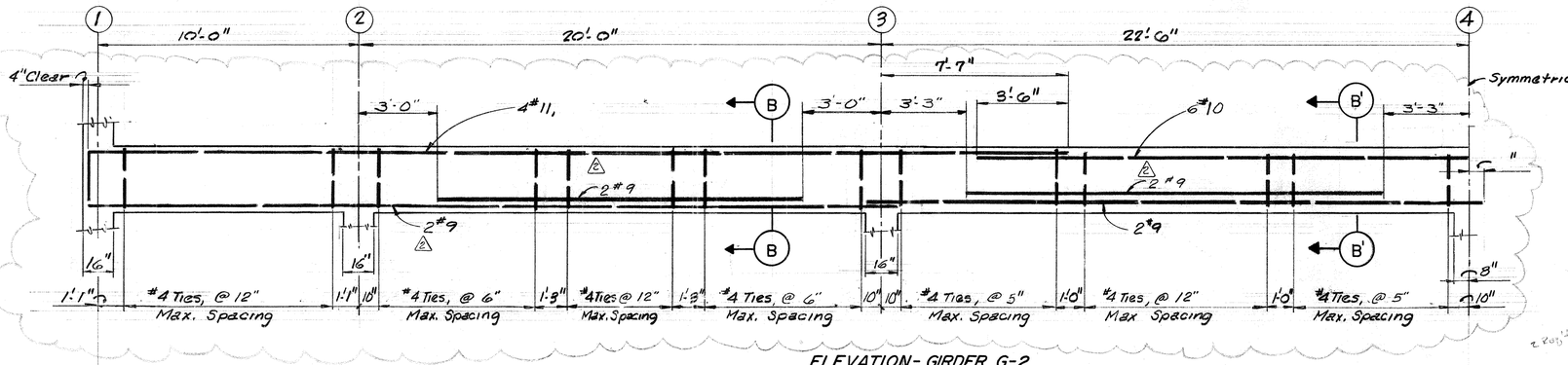

ELEVATION - GIRDER G-2

Scale : 3/8" = 1'-0"

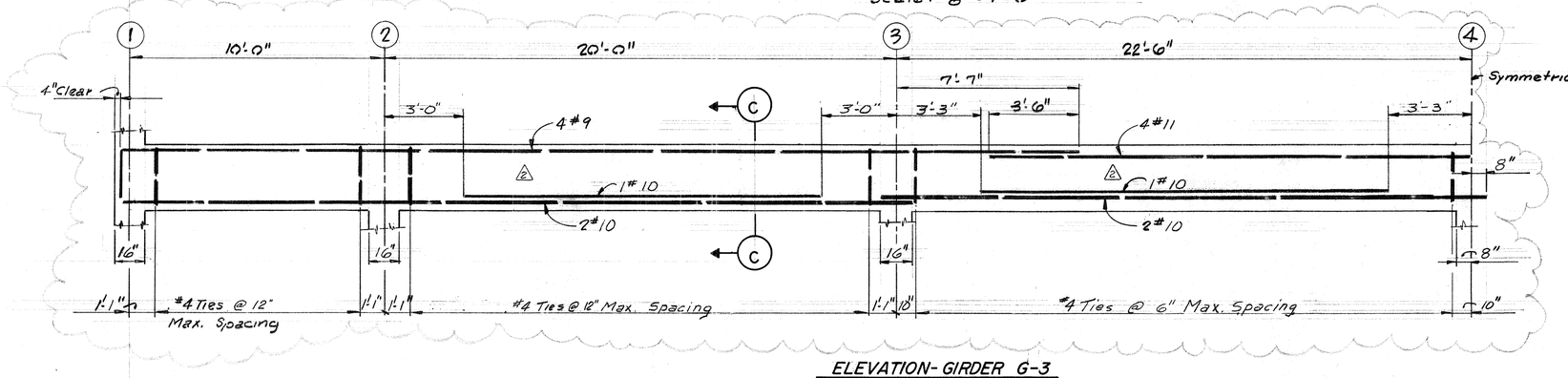

ELEVATION - GIRDER G-3

Scale : 3/8" = 1'-0"

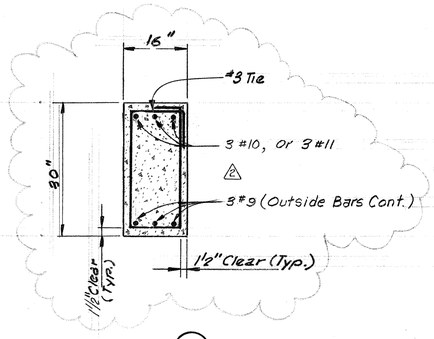

SECTION (A)

Scale : 3/4" = 1'-0"

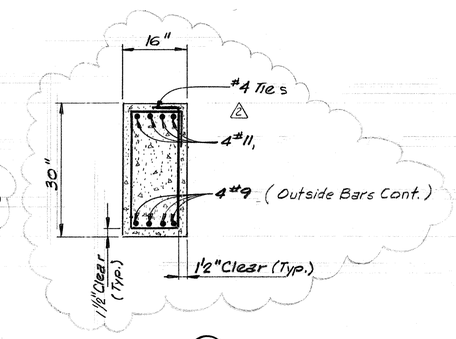

SECTION (B)

Scale : 3/4" = 1'-0"

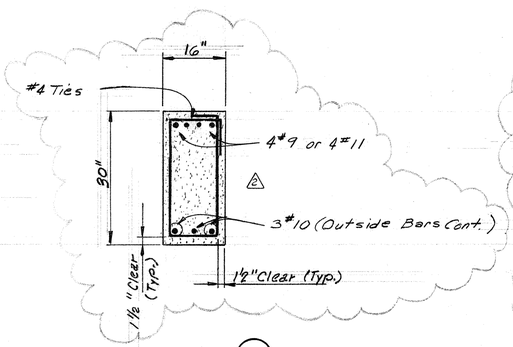

SECTION (C)

Scale : 3/4" = 1'-0"

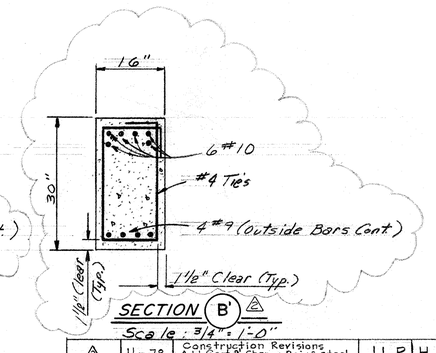

SECTION (B') △2

Scale : 3/4" = 1'-0"

△2

REINFORCING STEEL SCHEDULE FOR GIRDERS, G-1, G-2 AND G-3

MARK	TYPE	SIZE	NO. REQ'D	LENGTH PER BAR	Bent Bar Dim. "A"	Bent Bar Dim. "B"
		Girder	G-1			
G-101	1	#11	8	40'-0"	38'-0"	2'-0"
G-102	Str.	#11	8	37'-8"		
G-103	Str.	#9	8	31'-10"		
G-104	Str.	#9	8	24'-6"		
G-105	2	#3	65	7'-0"	2'-2"	0'-11"
		Girder	G-2			
G-201	1	#11	16	40'-0"	38'-0"	2'-0"
G-202	Str.	#11	16	37'-8"		
G-203	Str.	#9	16	31'-0"		
G-204	Str.	#9	16	23'-8"		
G-205	2	#4	84	7'-0"	2'-2"	0'-11"
		Girder	G-3			
G-301	1	#10	16	40'-0"	38'-0"	2'-0"
G-302	Str.	#10	16	37'-8"		
G-303	Str.	#9	16	31'-0"		
G-304	Str.	#9	16	23'-8"		
G-305	2	#4	50	7'-0"	2'-2"	0'-11"

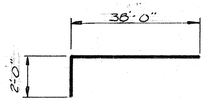

TYPE 1

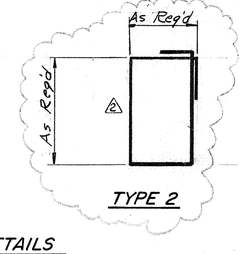

TYPE 2

BENT BAR DETAILS

N.T.S

STATE OF TEXAS — JAMES A. BINKLEY — 24282 — REGISTERED PROFESSIONAL ENGINEER

STATE OF TEXAS — PAUL E. HOLMES — 27638 — REGISTERED PROFESSIONAL ENGINEER

CITY OF HOUSTON
DEPARTMENT OF PUBLIC WORKS

ALMEDA SIMS
SLUDGE DISPOSAL
PLANT - 1973

FILTER ROOM

GIRDERS @ EL. 70.50

G-1, G-2 & G-3

RECOMMENDED FOR APPROVAL:
BINKLEY & HOLMES, INC., CONSULTING ENGINEERS

APPROVED:
CHIEF ENGINEER — ASST. CHIEF ENGINEER
ASST. DIRECTORS OF PUBLIC WORKS
DIRECTOR OF PUBLIC WORKS

DESIGNED BY: V. Jafri
DRAWN BY: G.T. RYAN & S.R.S.
CHECKED BY: M.B.J.
SCALE: As Shown
DATE: Dec. 1973
SHEET 41 OF 200 SHEETS
DRAWING NO. 18045

REV.NO.	DATE	DESCRIPTION	DESIGN	CHECKED
△2	11-78	Construction Revisions Add Sect. B; Change Reinf. Steel & Tie Spacing, Delete Bar Sched.	J.L.R.	H.J.K.
△1	3-77	General Revisions	J.C.S.	S.R.S.

D-SP-703K | REVISIONS

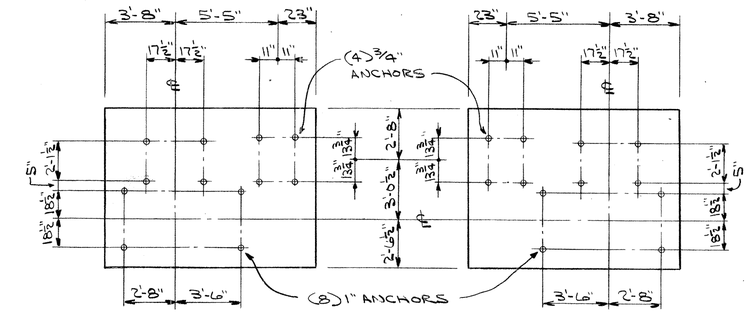

DET-A
I.D. FAN #2

DET-B
I.D. FAN #1

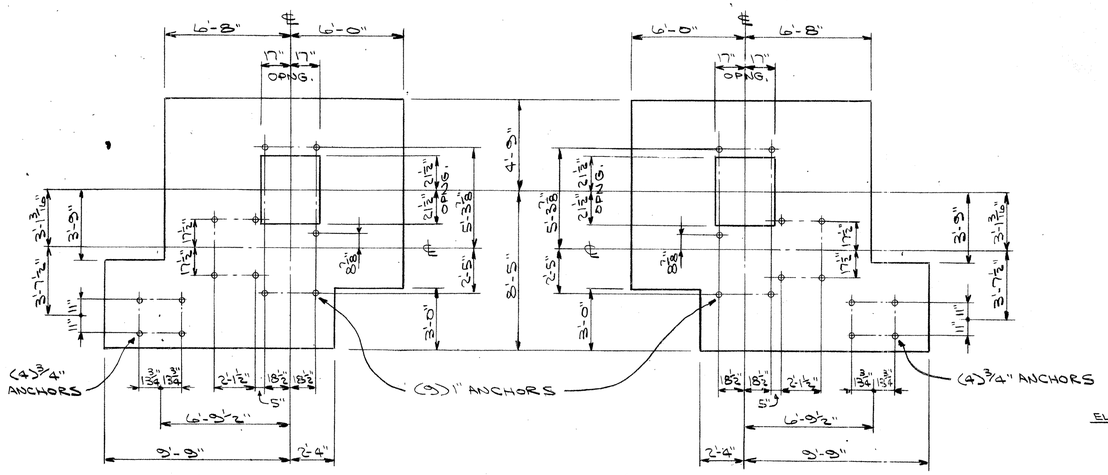

DET-C
VAPOR FAN #2

DET-D
VAPOR FAN #1

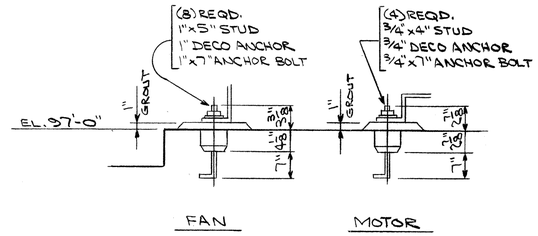

I.D. FANS #1 & #2

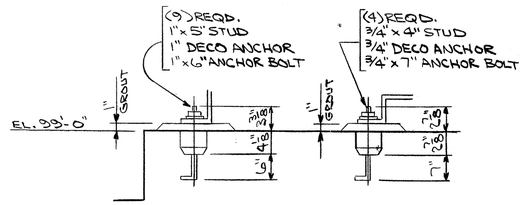

VAPOR FANS #1 & #2

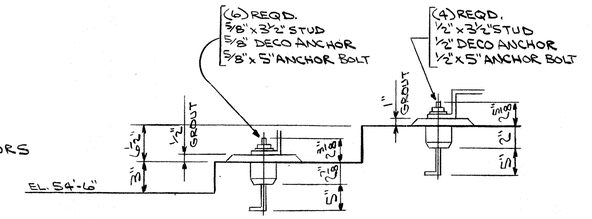

C.A. FANS #1 & #2

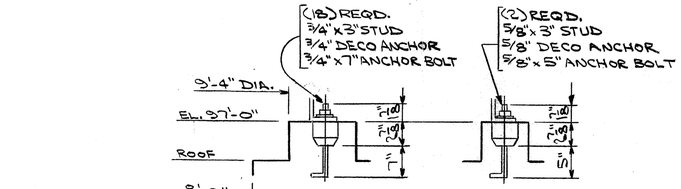

CYCLONES #1 & #2

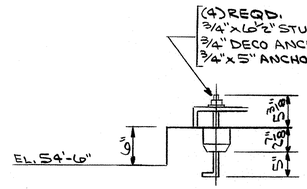

OIL PUMP

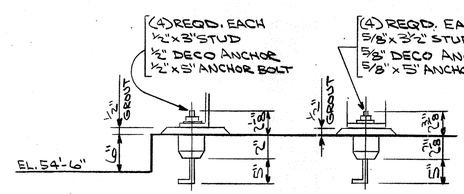

(2) AIR DRYER (2) AIR COMP.

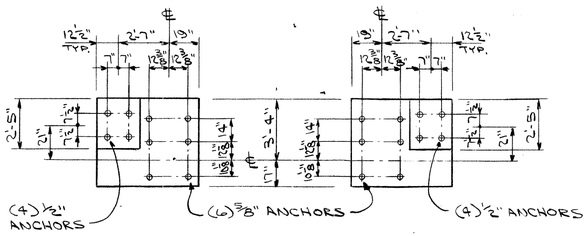

DET-E
C.A. FAN #2

DET-F
C.A. FAN #1

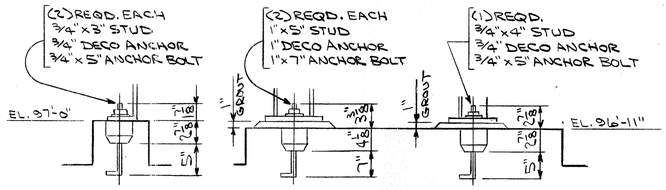

DUST COLLECTOR #1 & #2

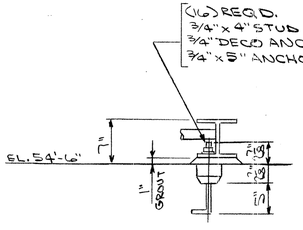

FURNACE #1 & #2

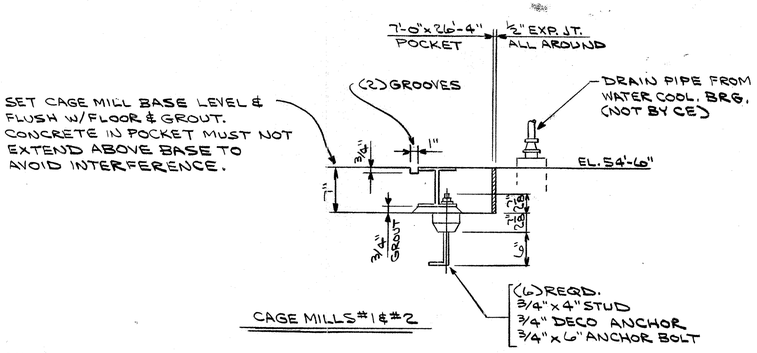

CAGE MILLS #1 & #2

CITY OF HOUSTON
DEPT. OF PUBLIC WORKS — WASTEWATER DIVISION

REVIEWED FOR GENERAL CONFORMANCE WITH DESIGN CONCEPT OF PROJECT AND GENERAL COMPLIANCE WITH THE CONTRACT DRAWINGS SPECIFICATIONS, AND DOCUMENTS:

- [x] NO EXCEPTION
- [ ] EXCEPTIONS AS NOTED
- [ ] REJECTED - REVISE AND RESUBMIT

Review of shop drawings shall in no way relieve the contractor of responsibility for deviation from requirements of contract documents, nor for errors or omissions in shop drawings. Contractor is responsible for confirming and correlating dimensions at job site, for information which pertains to fabrication processes or construction techniques, for fit of parts when assembled, and for coordination of work of all trades. This review does not supercede or override laboratory analysis or test reports.

BY: _____
DATE: 12-4-78

ASBUILT SHOP DRAWING

W. W. RECORDS
MICROFILM
DATE 6/26/82

BINKLEY & HOLMES, INC. Consulting Engineers
- [x] NO EXCEPTIONS NOTED
- [ ] EXCEPTIONS NOTED — REVISE AND RESUBMIT FOR DISTRIBUTION
- [ ] RETURNED FOR CORRECTION

Review does not relieve contractor of responsibility for conformity with contract requirements, correct details and fit of parts when assembled.

BINKLEY & HOLMES, INC. BY _____ DATE 6/26/78
CITY OF HOUSTON BY _____ DATE 12-4-78

JOB NO. 3304-DS CONTRACT NO. 41277

FOUNDATION DETAILS

FOR

ALMEDA SIMS PLANT
CITY OF HOUSTON, TEXAS

SCALE 1/4"=1'-0" DATE 4-27-78
DRAWN BY L CHECKED BY Ben
TRACED BY APPROVED RLM

THIS DRAWING IS THE PROPERTY OF COMBUSTION ENGINEERING, INC.

AND IS NOT TO BE REPRODUCED, OR USED TO FURNISH ANY INFORMATION FOR MAKING OF DRAWINGS OR APPARATUS EXCEPT WHERE PROVIDED FOR BY AGREEMENT WITH SAID COMPANY.

DRAWING NO. D-SP-703K-0

DWG. NO. 18045 H (SHT. NO. 41 OF)

POST 126-3

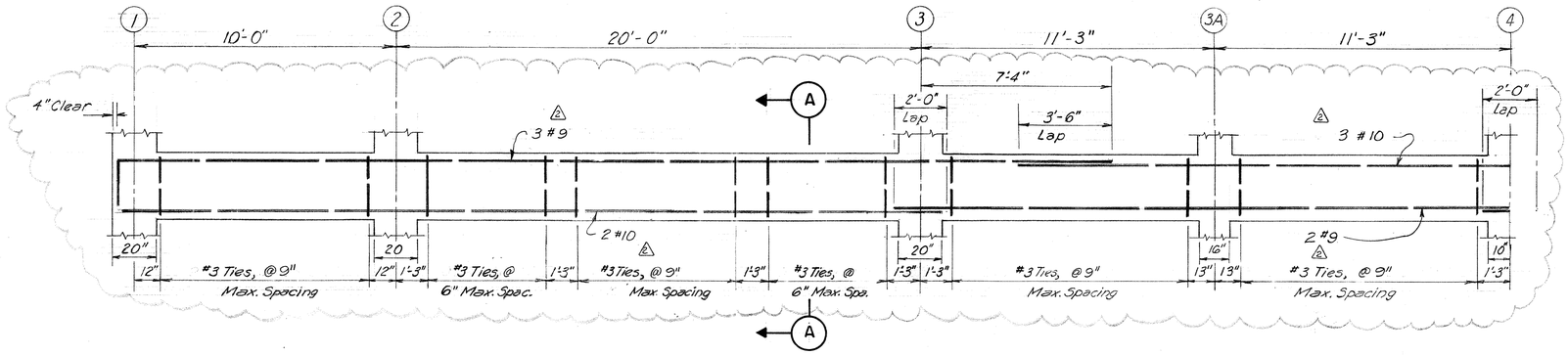

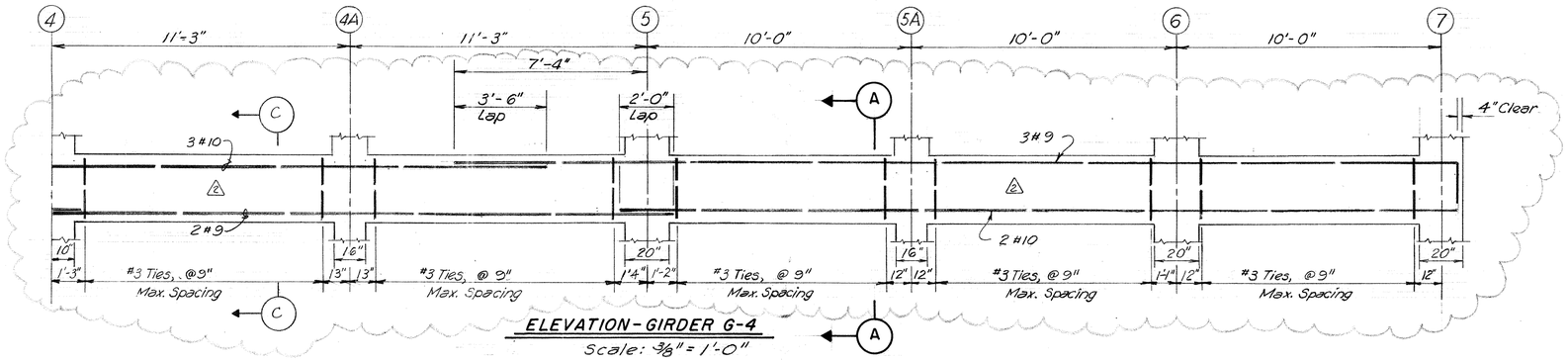

ELEVATION - GIRDER G-4

Scale: 3/8" = 1'-0"

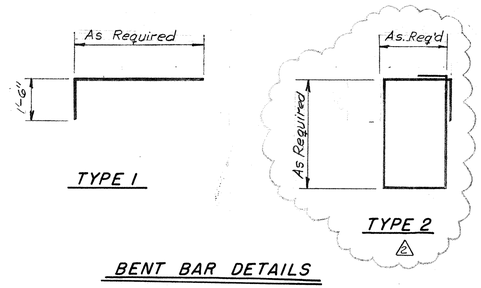

BENT BAR DETAILS

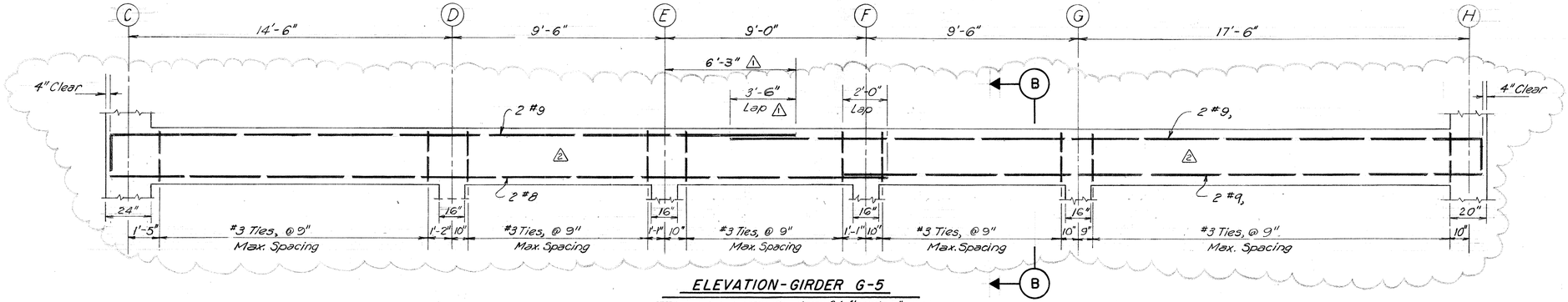

ELEVATION - GIRDER G-5

Scale: 3/8" = 1'-0"

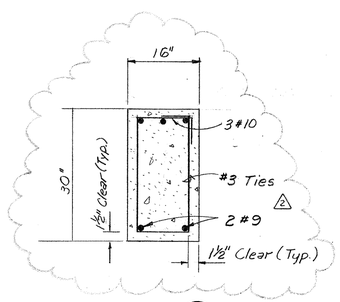

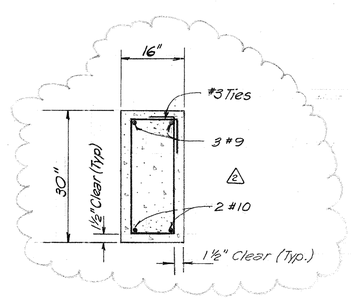

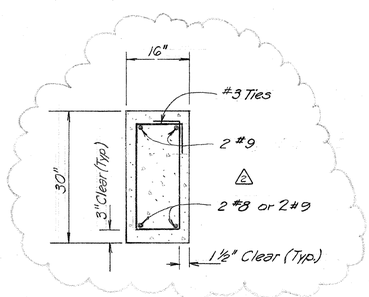

REINFORCING STEEL SCHEDULE FOR GIRDERS G-4 AND G-5

DELETE

MARK	TYPE	SIZE	NO. REQ'D	LENGTH PER BAR	BENT BAR DIM. "A"	BENT BAR DIM. "B"
		Girder G-4				
G-401	1	#11	8	40'-0"	38'-0"	2'-0"
G-402	Str.	#11	4	37'-4"		
G-403	Str.	#9	8	31'-6"		
G-404	Str.	#9	8	24'-2"		
G-405	2	#3	95	7'-6"	2'-2"	0'-11"
		Girder G-5				
G-501	1	#9	4	33'-4"	31'-4"	2'-0"
G-502	1	#9	4	35'-8"	33'-8"	2'-0"
G-503	Str.	#8	4	34'-8"		
G-504	Str.	#8	4	28'-6"		
G-505	2	#3	112	7'-2"	2'-0"	0'-11"

REV. No.	DATE	DESCRIPTION	DESIGN	CHECKED
2	11-78	Construction Revision Add Section C Change Reinf. Steel & Tie Spacing Change G-5 To 16"x30" Deleted Bar Schedule	J.L.R.	H.J.K.
1	3-77	Dimensions Changed	J.C.S.	S.R.S.

JAMES A. BINKLEY 24282 REGISTERED PROFESSIONAL ENGINEER — STATE OF TEXAS

PAUL R. HOLMES 27638 REGISTERED PROFESSIONAL ENGINEER — STATE OF TEXAS

CITY OF HOUSTON
DEPARTMENT OF PUBLIC WORKS

ALMEDA SIMS
SLUDGE DISPOSAL
PLANT - 1973

FILTER ROOM

GIRDERS @ EL. 70.50

G-4 & G-5

RECOMMENDED FOR APPROVAL:
BINKLEY & HOLMES, INC., CONSULTING ENGINEERS

APPROVED:
CHIEF ENGINEER — ASST. CHIEF ENGINEER
ASST. DIRECTORS OF PUBLIC WORKS
DIRECTOR OF PUBLIC WORKS

DESIGNED BY: V. Jarri
DRAWN BY: FRED SINCLAIR
CHECKED BY: M.D.J. & S.R.S.
SCALE: AS SHOWN
DATE: Dec., 1973
SHEET 42 OF 200 SHEETS
DRAWING NO. 18045

D-SP-703K	REVISIONS	1	DET. A & B: 2'-10½" WAS 2'-8", 2'-10" WAS 3'-0½", 1'-6¾" WAS 1'-3¾"	E 11-27-78

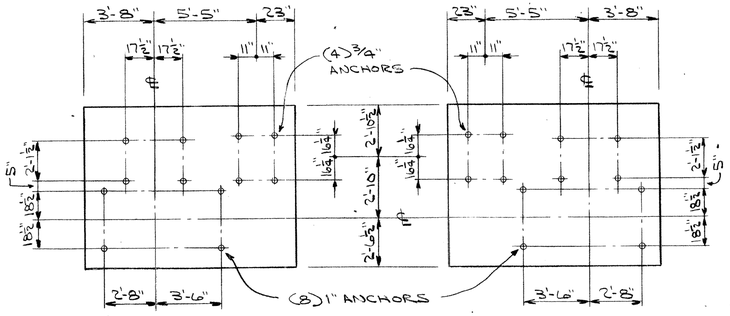

DET - A
I.D. FAN #2

DET - B
I.D. FAN #1

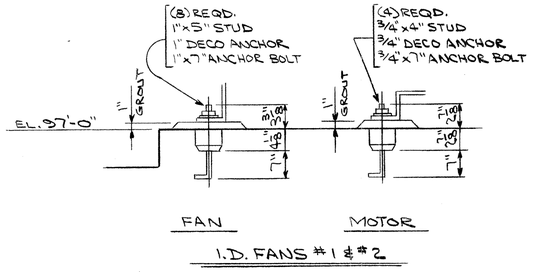

I.D. FANS #1 & #2

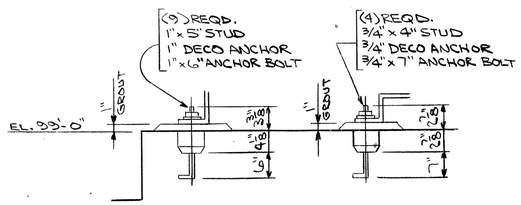

VAPOR FANS #1 & #2

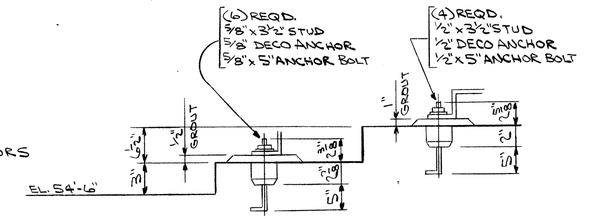

C.A. FANS #1 & #2

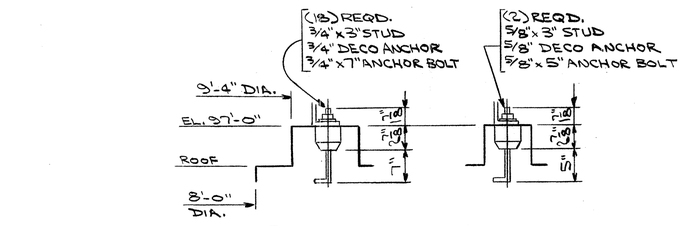

CYCLONES #1 & #2

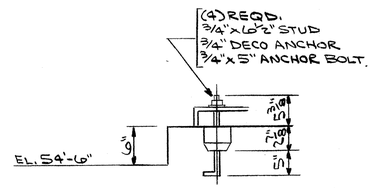

OIL PUMP

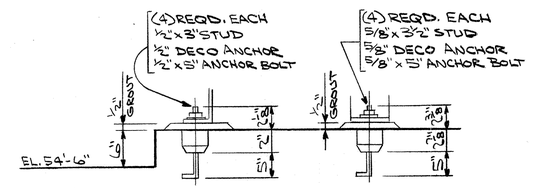

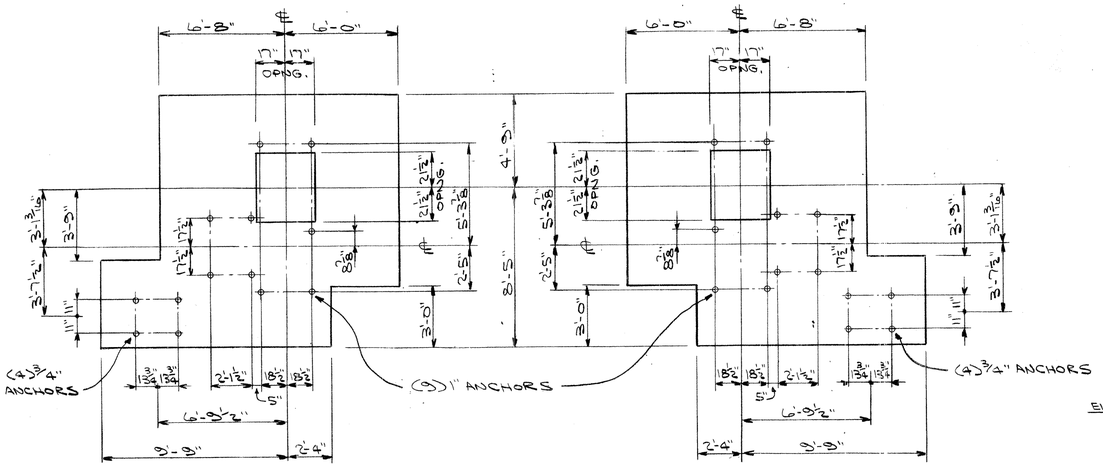

DET - C
VAPOR FAN #2

DET - D
VAPOR FAN #1

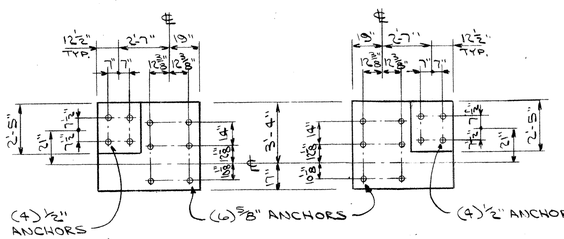

DET - E
C.A. FAN #2

DET - F
C.A. FAN #1

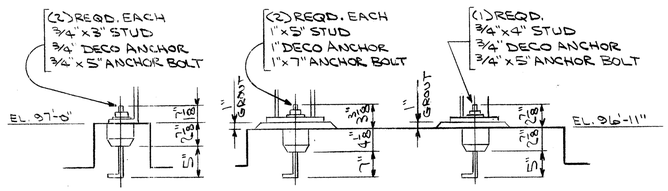

DUST COLLECTOR #1 & #2

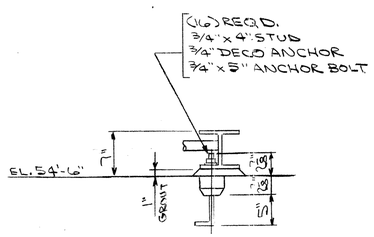

FURNACE #1 & #2

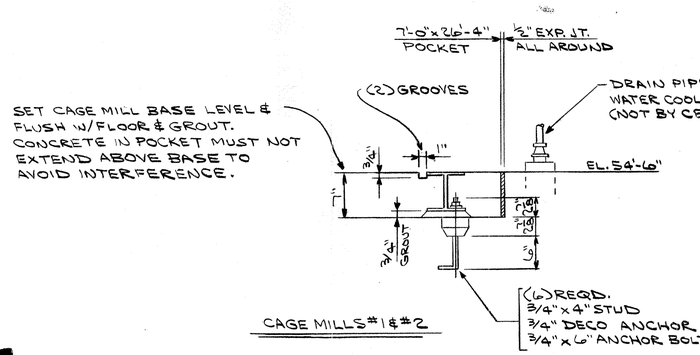

CAGE MILLS #1 & #2

CITY OF HOUSTON
DEPT. OF PUBLIC WORKS — WATERWORKS DIVISION

REVIEWED FOR GENERAL CONFORMANCE WITH DESIGN CONCEPT OF PROJECT AND GENERAL COMPLIANCE WITH THE CONTRACT DOCUMENTS SPECIFICATIONS, AND DOCUMENTS.

- ☑ NO EXCEPTIONS
- ☐ EXCEPTIONS AS NOTED
- ☐ RESUBMIT - REVISE AND RESUBMIT

Review of shop drawings shall in no way relieve the contractor of responsibility for deviation from requirements of contract documents, responsibility for deviation from requirements of contract documents, responsibility for and general compliance with the contract documents. Contractor is responsible for errors or omissions in shop drawings. Contractor is responsible for confirming and correlating dimensions at job site, for information which pertains to fabrication processes or construction techniques, for fit of parts when assembled, and for coordination of work of all trades. This review does not supercede or supersede laboratory analysis or test reports.

BY: [signature]
DATE: 12-26-78

BINKLEY & HOLMES, INC. Consulting Engineers

- ☑ NO EXCEPTIONS NOTED
- ☐ EXCEPTIONS NOTED
- ☐ REVISE AND RESUBMIT FOR DISTRIBUTION
- ☐ RETURNED FOR CORRECTION

Review does not relieve contractor of responsibility for conformity with contract requirements, correct details and fit of parts when assembled.

BINKLEY & HOLMES, INC. BY [signature] DATE 12/26/78
CITY OF HOUSTON BY _____ DATE _____

ASBUILT SHOP DRAWING

W. W. RECORDS
MICROFILM
DATE 6/26/80

JOB NO. 3304-DS CONTRACT NO. 41277

FOUNDATION DETAILS

FOR
ALMEDA SIMS PLANT
CITY OF HOUSTON, TEXAS

SCALE 1/4" = 1'-0" DATE 4-27-78
DRAWN BY YL CHECKED BY [illegible]
TRACED BY APPROVED RLM

THIS DRAWING IS THE PROPERTY OF COMBUSTION ENGINEERING, INC.

AND IS NOT TO BE REPRODUCED, OR USED TO FURNISH ANY INFORMATION FOR MAKING OF DRAWINGS OR APPARATUS EXCEPT WHERE PROVIDED FOR BY AGREEMENT WITH SAID COMPANY.

DRAWING NO. D-SP-703K-0

DWG. NO. 18045 H (SHT. NO. 42 OF)

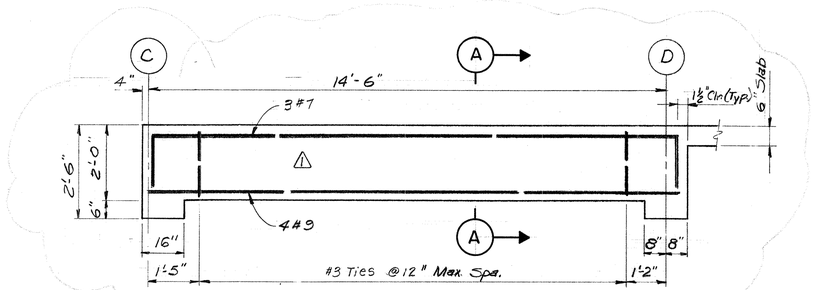

ELEVATION BEAM B-1

Scale: 1/2"=1'-0"

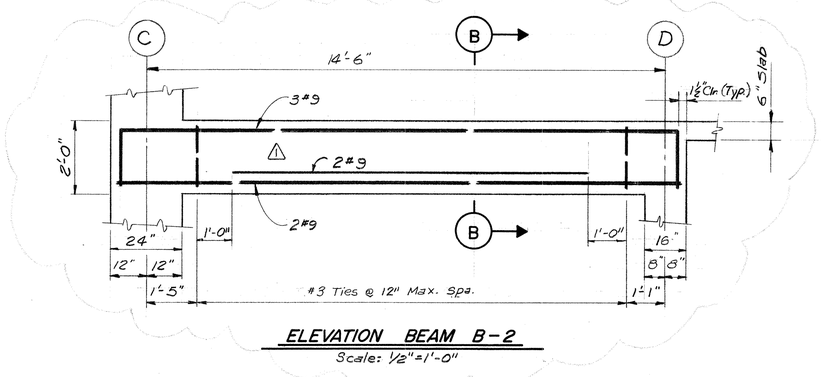

ELEVATION BEAM B-2

Scale: 1/2"=1'-0"

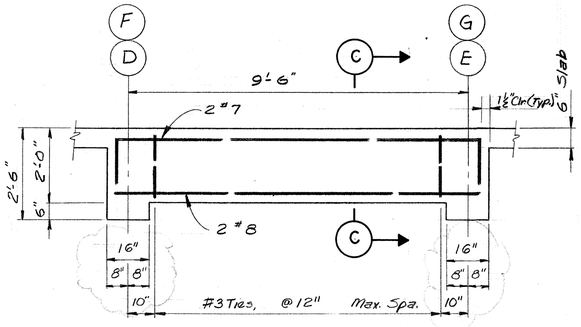

ELEVATION BEAM B-3

Scale: 1/2"=1'-0"

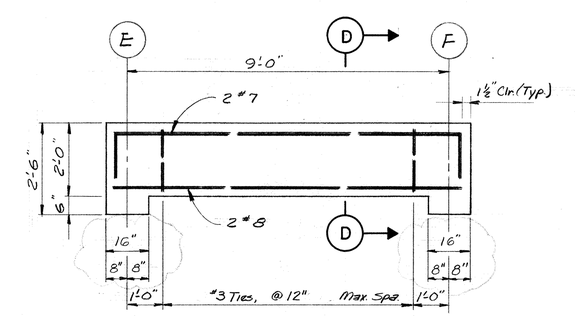

ELEVATION BEAM B-4

Scale: 1/2"=1'-0"

REINFORCING STEEL SCHEDULE FOR BEAMS B-1 Thru B-4						
MARK	TYPE	SIZE	NO. REQ'D.	LENGTH PER BAR	BENT BAR DIM. "A"	BENT BAR DIM. "B"
			BEAM B-1			
B-101	1	#8	40	17'-10"	15'-0"	1'-5"
B-102	Str.	#7	30	15'-0"		
B-103	2	#3	130	5'-10"	1'-6"	0'-9"
			BEAM B-2			
B-201	1	#9	20	19'-0"	15'-10"	1'-7"
B-202	Str.	#8	20	15'-10"		
B-203	2	#3	45	6'-2"	1'-6"	0'-11"
			BEAM B-3			
B-301	1	#7	24	12'-11"	10'-5"	1'-3"
B-302	Str.	#8	24	10'-5"		
B-303	2	#3	108	5'-10"	1'-6"	0'-9"
			BEAM B-4			
B-401	1	#7	12	12'-5"	9'-11"	1'-3"
B-402	Str.	#8	12	9'-11"		
B-403	2	#3	48	5'-10"	1'-6"	0'-9"

DELETED

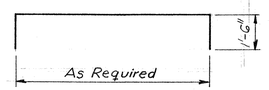

TYPE "1"

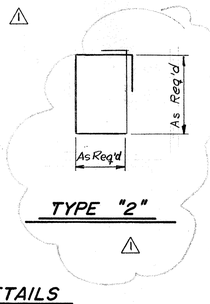

TYPE "2"

BENT BAR DETAILS

See Schedule for Dimensions

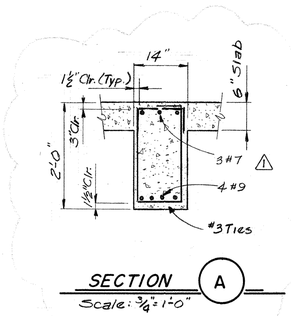

SECTION A

Scale: 3/4"=1'-0"

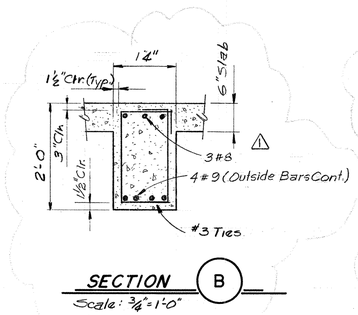

SECTION B

Scale: 3/4"=1'-0"

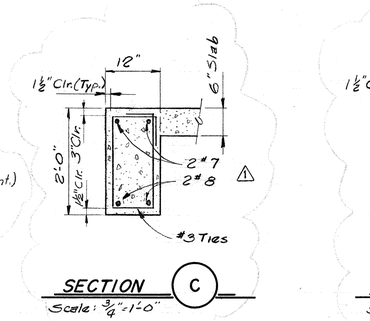

SECTION C

Scale: 3/4"=1'-0"

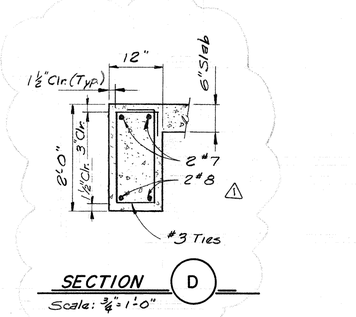

SECTION D

Scale: 3/4"=1'-0"

REV. NO.	DATE	DISCRIPTION	DESING	CHECKED
1	11-78	Construction Revisions Change Steel For B-1 & B-2 Change Ties & Spacing Deleted Bar Schedule	J.L.R	H.J.K

JAMES A. BINKLEY — STATE OF TEXAS — 24282 — REGISTERED PROFESSIONAL ENGINEER

PAUL R. HOLMES — STATE OF TEXAS — 27638 — REGISTERED PROFESSIONAL ENGINEER

CITY OF HOUSTON
DEPARTMENT OF PUBLIC WORKS

ALMEDA SIMS
SLUDGE DISPOSAL
PLANT—1973

FILTER ROOM
BEAMS @ ELEV. 70.50
B-1, B-2, B-3, & B-4

RECOMMENDED FOR APPROVAL:
BINKLEY & HOLMES, INC., CONSULTING ENGINEERS

APPROVED:
CHIEF ENGINEER — ASST. CHIEF ENGINEER
ASST. DIRECTORS OF PUBLIC WORKS
DIRECTOR OF PUBLIC WORKS

DESIGNED BY: V. Jain
DRAWN BY: E.N. Smith
CHECKED BY: M.D.J. & S.P.S.
SCALE: As Shown
DATE: Dec., 1973
SHEET 43 OF 200 SHEETS
DRAWING NO. 18045

D-SP-703K	REVISIONS	1	DET. A & B: 2'-10½" WAS 2'-8" ↕ 2'-10" WAS 3'-0½" ; 11⅝" WAS 13¾" 11-21-78	2	DUST COLL - ADD ↕ ROOF OPNG. 1-11-79

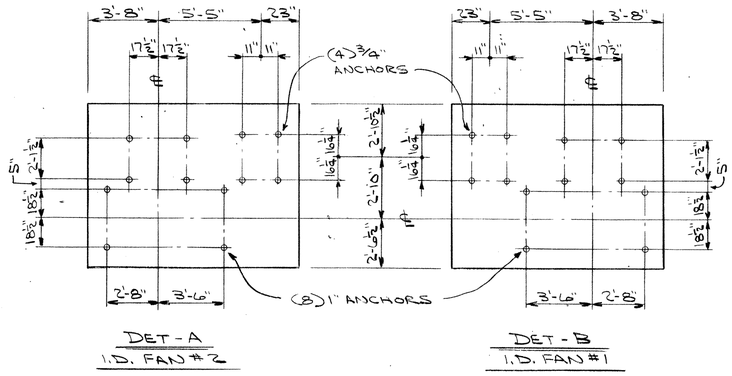

DET - A
I.D. FAN #2

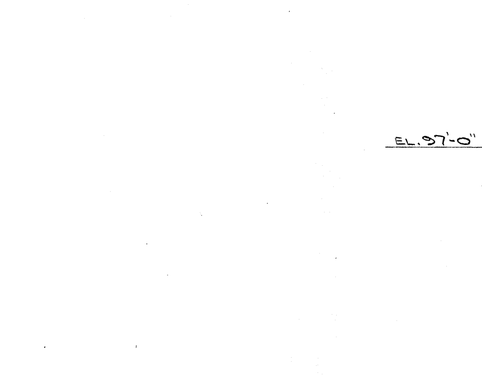

DET - B
I.D. FAN #1

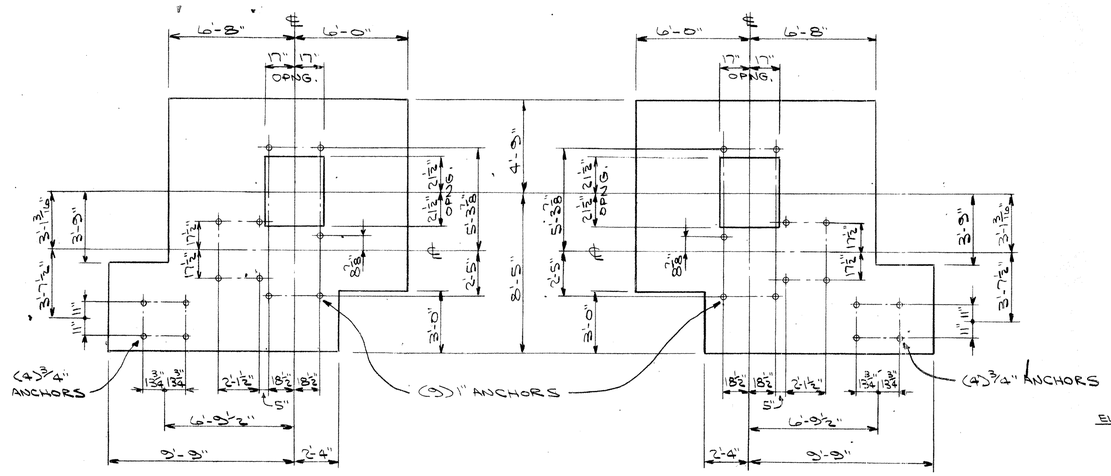

DET-C
VAPOR FAN #2

DET-D
VAPOR FAN #1

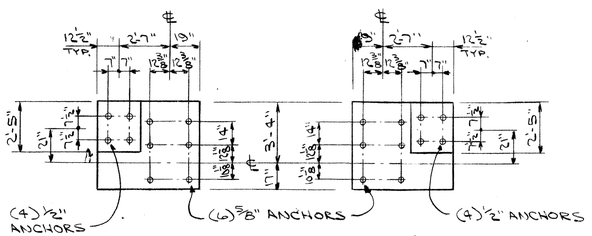

DET-E
C.A. FAN #2

DET-F
C.A. FAN #1

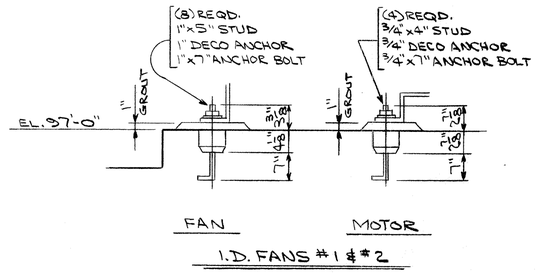

I.D. FANS #1 & #2

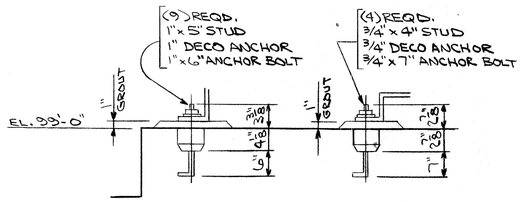

VAPOR FANS #1 & #2

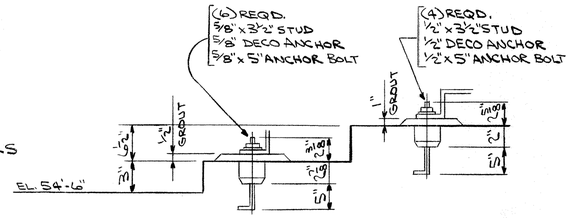

C.A. FANS #1 & #2

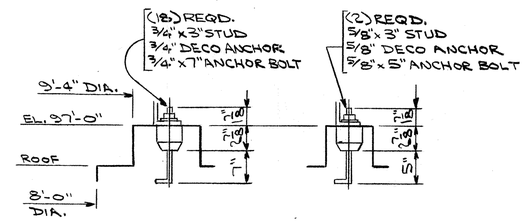

CYCLONES #1 & #2

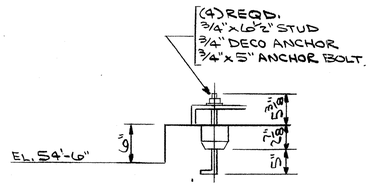

OIL PUMP

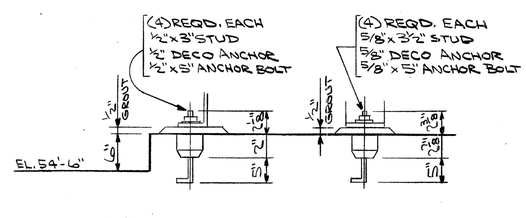

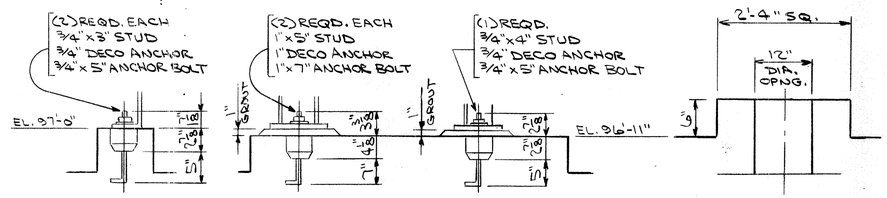

DUST COLLECTOR #1 & #2

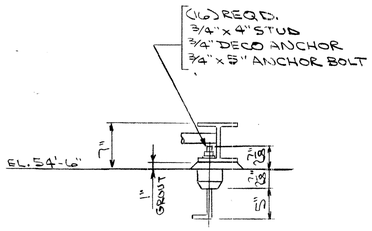

FURNACE #1 & #2

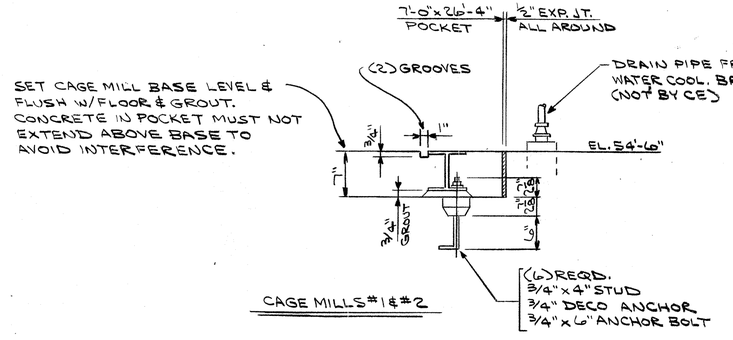

CAGE MILLS #1 & #2

BINKLEY & HOLMES, INC. Consulting Engineers
☑ NO EXCEPTIONS NOTED
☐ EXCEPTIONS NOTED
REVISE AND RESUBMIT FOR DISTRIBUTION
☐ RETURNED FOR CORRECTION
Review does not relieve contractor of responsibility for conformity with contract requirements, correct details and fit of parts when assembled.
BINKLEY & HOLMES, INC. BY [signature] DATE 1/9/79
CITY OF HOUSTON BY [signature] DATE 2-3-79

ASBUILT SHOP DRAWING

W. W. RECORDS
MICROFILM
DATE 4/24/82

JOB NO. 3304-DS CONTRACT NO. 41277

FOUNDATION DETAILS

FOR
ALMEDA SIMS PLANT
CITY OF HOUSTON, TEXAS

SCALE 1/4" = 1'-0" DATE 9-27-78
DRAWN BY [illegible] CHECKED BY [illegible]
TRACED BY APPROVED RLM

THIS DRAWING IS THE PROPERTY OF COMBUSTION ENGINEERING, INC.
AND IS NOT TO BE REPRODUCED, OR USED TO FURNISH ANY INFORMATION FOR MAKING OF DRAWINGS OR APPARATUS EXCEPT WHERE PROVIDED FOR BY AGREEMENT WITH SAID COMPANY.

DRAWING NO. D-SP-703K-2

IST 126-3

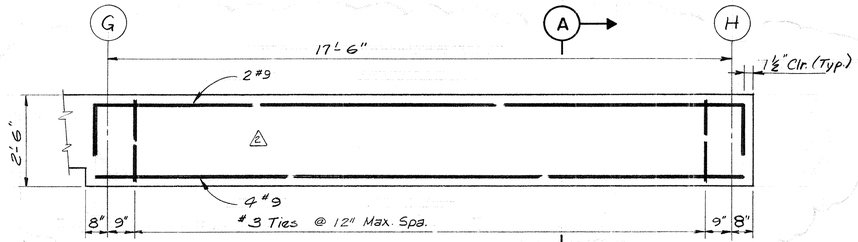

ELEVATION BEAM B-5

Scale: ½" = 1'-0"

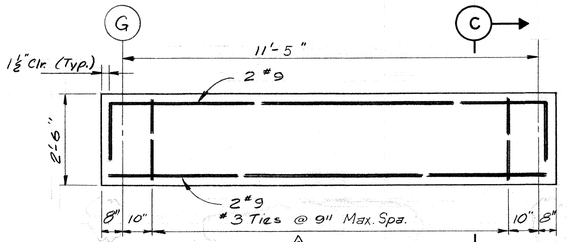

ELEVATION BEAM B-7

Scale: ½" = 1'-0"

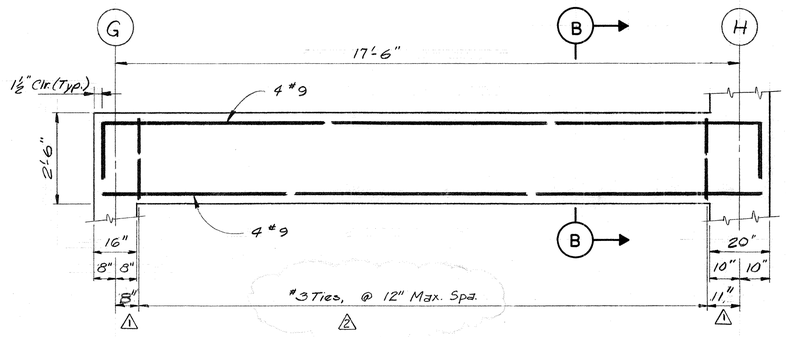

ELEVATION BEAM B-6

Scale: ½" = 1'-0"

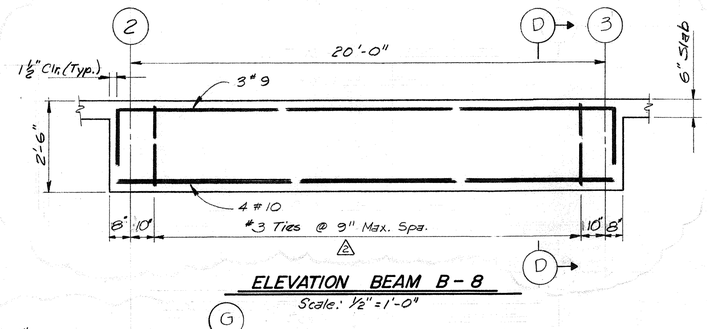

ELEVATION BEAM B-8

Scale: ½" = 1'-0"

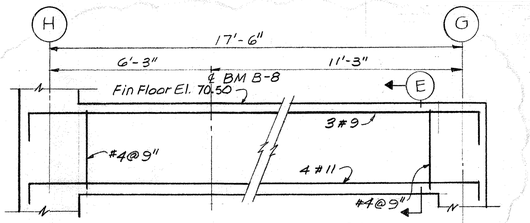

ELEVATION BEAM B-6A

2 - Required

Scale: 1/2" = 1'-0"

REINFORCING STEEL SCHEDULE FOR BEAMS B-5 THRU B-8					
MARK	TYPE	SIZE	NO. REQ'D.	LENGTH PER BAR	BEN. "A"
		BEAM B-5			
B-501	1	#8	36	21'-3"	18'-5"
B-502	Str.	#9	36	18'-5"	
B-503	2	#3	153	6'-10"	2'-0"
		BEAM B-6			
B-601	1	#9	20	21'-10"	18'-8"
B-602	Str.	#9	20	18'-8"	
B-603	2	#3	85	7'-2"	2'-0"
		BEAM B-7			
B-701	1	#9	2	15'-8"	12'-6"
B-702	Str.	#9	2	12'-6"	
B-703	2	#3	11	6'-10"	2'-0"
		BEAM B-8			
B-801	1	#9	2	17'-4"	14'-2"
B-802	Str.	#9	2	14'-2"	
B-803	2	#3	13	6'-10"	2'-0"

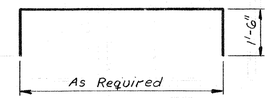

TYPE "1"

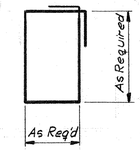

TYPE "2"

BENT BAR DETAILS

See Schedule for Dimensions

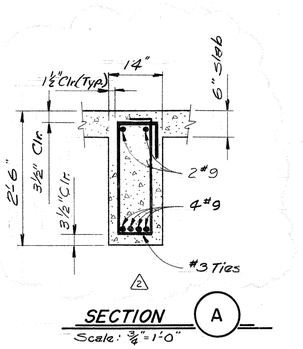

SECTION A

Scale: ¾" = 1'-0"

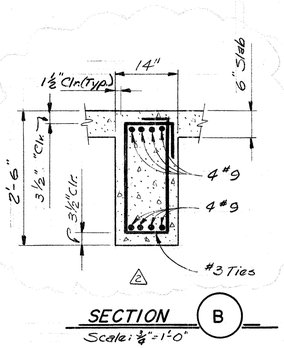

SECTION B

Scale: ¾" = 1'-0"

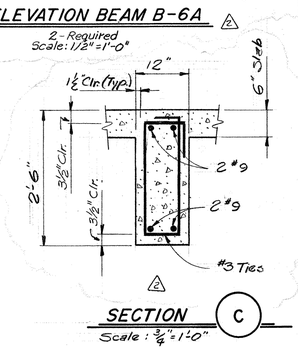

SECTION C

Scale: ¾" = 1'-0"

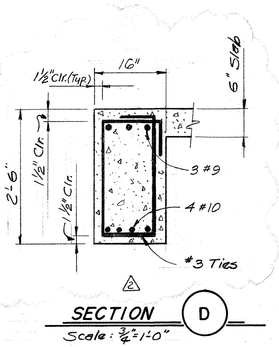

SECTION D

Scale: ¾" = 1'-0"

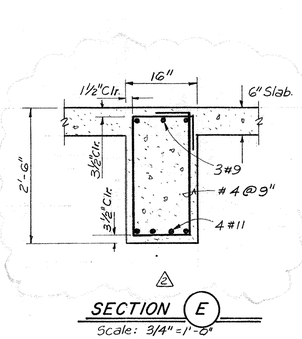

SECTION E

Scale: 3/4" = 1'-0"

REV. NO.	DATE	DESCRIPTION	DESIGN	CHECKED
2	11-78	Construction Revisions Deleted Bar Sched., Change Ties Change Beams B-7, B-8 & B-6A Add Elev. B-6A & Sect. E, Change Rein. Steel	J.L.R	H.J.K.
1	3-77	Dimensions Changed	J.C.S.	S.R.S.

CITY OF HOUSTON
DEPARTMENT OF PUBLIC WORKS

ALMEDA SIMS
SLUDGE DISPOSAL
PLANT – 1973

FILTER ROOM
BEAMS @ ELEV. 70.50
B-5, B-6, B-7, & B-8

RECOMMENDED FOR APPROVAL:
Paul R. Holmes
BINKLEY & HOLMES, INC., CONSULTING ENGINEERS

APPROVED:
Walter Williams
CHIEF ENGINEER — ASST. CHIEF ENGINEER
ASST. DIRECTORS OF PUBLIC WORKS
DIRECTOR OF PUBLIC WORKS

DESIGNED BY: V. Jaeri
DRAWN BY: E.N. Smith
CHECKED BY: M.D.J. & S.R.S.
SCALE: As Shown
DATE: Dec., 1973
SHEET 44 OF 200 SHEETS
DRAWING NO. 18045

D-SP-703X	REVISION	1	ADD. DUST COLL. & ITEM 26 & 4 ITEMS 8 & 9: TOTAL QUAN. WERE 1	4-28-78

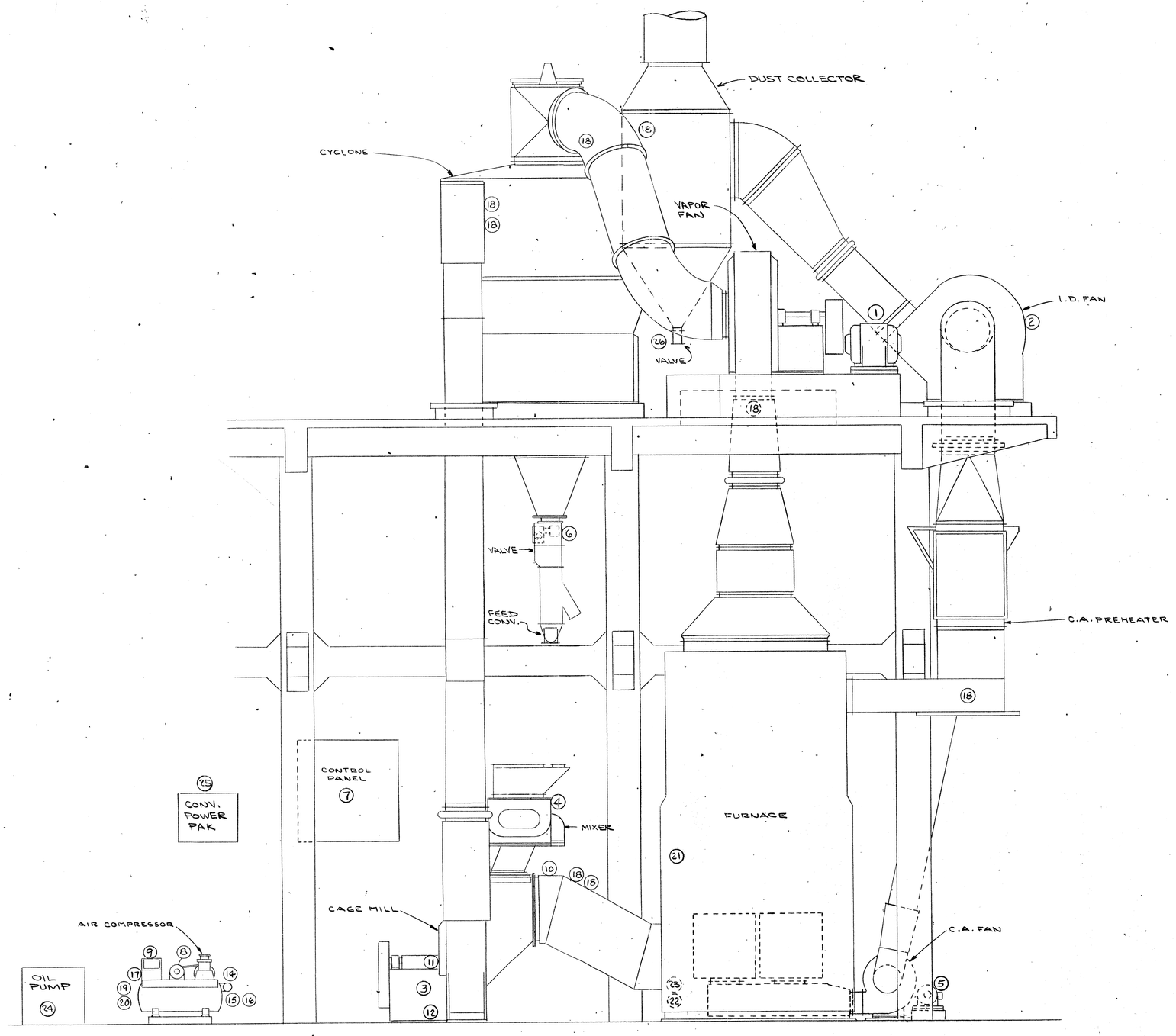

ITEM	POWER REQUIREMENTS		QUAN. PER UNIT	TOTAL 2-UNITS
26	DUST COLL. VALVE	½HP 1PH. 60CY. 115V	1	2
24	OIL PUMP	5HP. 3PH. 60CY. 460V.	—	2
1	VAPOR FAN MOTOR	150HP. 3PH. 60CY. 460V.	1	2
2	I.D. FAN MOTOR	150HP. 3PH. 60CY. 460V.	1	2
3	CAGE MILL MOTOR	30HP. 3PH. 60CY. 460V.	1	2
4	MIXER MOTOR	40HP. 3PH. 60CY. 460V.	1	2
5	C.A. FAN MOTOR	15HP. 3PH. 60CY. 460V.	1	2
6	D.F. VALVE MOTOR	¾HP. 3PH. 60CY. 460V.	1	2
7	CONTROL PANEL	20AMPS, 1PH. 60CY. 115V.	1	2
8	AIR COMPRESSOR	10HP. 3PH. 60CY. 460V.	—	2
9	AIR DRYER	½HP. 1PH. 60CY. 115V.	—	2
25	CONV. POWER PAK	7½HP. 3PH. 60CY. 460V.	1	2
	WATER REQUIREMENTS			
10	HOT GAS DUCT	1¼" PIPE 80PSI. 25GPM.	1	2
11	C.M. BEARING SUPPLY	½" PIPE FREE FLOW 1GPM.	1	2
12	C.M. BEARING DRAIN	1" PIPE FREE FLOW	1	2
13	MIXER	1¼" PIPE 80PSI. 25GPM.	1	2
14	AFTER COOLER SUPPLY	½" PIPE 80PSI. 3GPM.	—	1
15	AFTER COOLER DRAIN	½" PIPE FREE FLOW	—	1
16	AFTER COOLER TRAP	½" PIPE FREE FLOW	—	1
17	AIR DRYER TRAP	½" PIPE FREE FLOW	—	1
18	FOG SPRAY CONNECTION	2" PIPE COUPLING	8	16
19	WATER COOLED CONDENSER SUPPLY	½" PIPE 80PSI. 1GPM.	—	1
20	WATER COOLED CONDENSER DRAIN	½" PIPE FREE FLOW	—	1
	COMPRESSED AIR SUPPLY *			
21	SOOT BLOWERS	1¼" PIPE 200PSI. 30SCFM.	1	2
	NATURAL GAS SUPPLY			
22	GAS BURNERS	4" PIPE 15PSI. 30,000SCFH.	1	2
	#2 FUEL OIL SUPPLY **			
23	OIL BURNERS	1" PIPE 300PSI 1406#/HR.	1	2

* COMPRESSED AIR SUPPLY & PIPING, FOR CONTROLS FOR 2 UNITS, FURNISHED & INSTALLED BY CE.

** #2 FUEL OIL INCREASED PRESSURE & PIPING, FOR CONTROLS FOR 2 UNITS, FURNISHED & INSTALLED BY CE.

BINKLEY & HOLMES, INC. Consulting Engineers
☑ NO EXCEPTIONS NOTED
☐ EXCEPTIONS NOTED
REVISE AND RESUBMIT FOR DISTRIBUTION
☐ RETURNED FOR CORRECTION
Review does not relieve contractor of responsibility to conformity with contract requirements, correct details and fit of parts when assembled.
BINKLEY & HOLMES, INC. BY [signature] DATE 6/13/78
CITY OF HOUSTON BY [signature] DATE 12-4-78

CITY OF HOUSTON
DEPT. OF PUBLIC WORKS WASTEWATER DIVISION
REVIEWED FOR GENERAL CONFORMANCE WITH DESIGN CONCEPT OF PROJECT AND GENERAL COMPLIANCE WITH THE CONTRACT DRAWINGS SPECIFICATIONS, AND DOCUMENTS.
☑ NO EXCEPTION
☐ EXCEPTIONS AS NOTED
☐ REJECTED - REVISE AND RESUBMIT
Review of shop drawings shall in no way relieve the contractor of responsibility for deviation from requirements of contract documents, nor for errors or omissions in shop drawings. Contractor is responsible for confirming and correlating dimensions at job site, for information which pertains to fabrication processes or construction techniques, for fit of parts when assembled, and for coordination of work of all trades. This review does not supercede or overrule laboratory analysis or test reports.
BY: [signature]
DATE 12-4-78

ASBUILT SHOP DRAWING

W. W. RECORDS
MICROFILM
DATE 6/20/82

JOB NO. 3304-DS
RAYMOND DIVISION, CHICAGO, ILL. CONTR. NO. 41277

POWER, WATER, GAS, OIL & AIR REQ.
FOR ALMEDA SIMS PLANT
CITY OF HOUSTON, TEXAS

SCALE 1/8" = 1'-0" DATE 4-29-76
DRAWN BY L CHECKED BY
TRACED BY APPROVED C.W. 4/30/76

THIS DRAWING IS THE PROPERTY OF COMBUSTION ENGINEERING, INC. AND IS NOT TO BE REPRODUCED, OR USED TO FURNISH ANY INFORMATION FOR MAKING OF DRAWINGS OR APPARATUS EXCEPT WHERE PROVIDED FOR BY AGREEMENT WITH SAID COMPANY.

DRAWING NO. D-SP-703X-1

DWG. NO. 18045 (SHT. NO. 44 OF)

DIETZGEN No. 138-3 AGEPROOF

105'-0"

10'-0" | 20'-0" | 22'-6" | 22'-6" | 20'-0" | 10'-0"

3/4"ϕ X 12" long S.S. A.B. w/H.H. Nut & Flat Washer (3" Proj.)

2'-10" 4'-4" 2'-10" 1'-3" 3'-2" 2'-0" 3'-8" 3'-9" 3'-2" 1'-3" 1'-3" 3'-3" 3'-3" 3'-3" 3'-3" 3'-3" 3'-8" 2'-0" OPEN 1'-0" 1'-3" 1'-3" 3'-4" 3'-4" 3'-4" 3'-4" 3'-4" 3'-4" 3'-4" 1'-3" 1'-3" 1'-1" 3'-9" 3'-9" 3'-9" 3'-2" 1'-3" 2'-10" 4'-4" 2'-10"

2½" TYP. | 2½" (TYP.) | 2½" (TYP.) | 2½" (TYP.)

Fog Fire Pump

4" Dia Sleeve

8" Dia. Sleeve

22" Dia. Sleeve

10" Dia Sleeve

4" Dia. Sleeve

10" Dia. Sleeve

18" Dia. Sleeve

8" Dia. Sleeve

5" Dia. Sleeve

Typ. Grating Support

Typ. Grating

Typ. Sleeve Penetrations

3/4"ϕ x 12" Long S.S. Anchor Bolts W/H.H. Nut & Flat Washer (3" Proj.)

Back of Channel

C10X15.3

Handrail See Sht. 46

Down

Jib Crane Pad See Sht. No. 40 For Details.

3/4"ϕ x 12" Long S.S. Anchor Bolts W/H.H. Nut & Flat Washer (3" Proj.) 20 Req'd.

3/4"ϕ x 12" Long S.S. Anchor Bolts W/H.H. Nut & Flat Washer (3" Proj.) 12 Req'd.

1/2"ϕ x 0'-6" Long Galv. Anchor Bolts w/ Galv. Nut & Washer (1½" Proj.) 13 Req'd.

& Fillers

11'-3" | 11'-3" | 11'-3" | 11'-3" | 10'-0" | 10'-0" | 10'-0"

1 2 3 3A 4 4A 5 5A 6 7

C D E F G H

PLAN AT ELEV. 70.50

Scale: 1/4" = 1'-0"

B#6 FF-22@ Top & Bott. Each Pipe Sleeve Opening in Slab

½" Min. Clear (Typical)

O.D. of Sleeve

1" Min. Lap (Typ.)

TYPICAL DETAIL OF EXTRA REINFORCING AT PIPE OPENINGS IN SLAB

Not to Scale

NOTE:

~~1. See Reinforcing Steel Schedule on Sht. No. 40 For Reinforcing Steel at Pipe Sleeve Openings.~~

2. All Sleeves to Extend 3" Above Floor.

REV. NO.	DATE	DESCRIPTION	DESIGN	CHECKED
5	3-79	Construction Revision Modifing Grating - Relocated & Added Pipe Sleeves	W.G.W.	H.J.K.
4	11-78	Construction Revisions Change Location & Size Vacuum Exhaust Sleeves	J.L.R.	H.J.K.
3	10-78	Construction Revisions Added & Relocated Pipe Penetrations For Additional Fog Pump	H.J.K.	K.R.L.
2	6-77	Rev. Staircase Add Note	J.C.S.	K.R.L.
1	3-77	Rev. To Comply W/ Piping Move Fog Pump	J.C.S.	S.R.S.

CITY OF HOUSTON
DEPARTMENT OF PUBLIC WORKS

ALMEDA SIMS SLUDGE DISPOSAL PLANT - 1973

FILTER ROOM

GRATING AND PIPE SLEEVE LAYOUT AT ELEV. 70.50

RECOMMENDED FOR APPROVAL:
BINKLEY & HOLMES, INC., CONSULTING ENGINEERS

APPROVED:
CHIEF ENGINEER — ASST. CHIEF ENGINEER
ASST. DIRECTORS OF PUBLIC WORKS
DIRECTOR OF PUBLIC WORKS

DESIGNED BY: V. Jafri
DRAWN BY: S. McVicar
CHECKED BY: M.D.J. & S.R.S.
SCALE: As Shown
DATE: Dec. 1973
SHEET 45 OF 200 SHEETS
DRAWING NO. 18045

STATE OF TEXAS — JAMES A. BINKLEY — 24282 — REGISTERED PROFESSIONAL ENGINEER

STATE OF TEXAS — PAUL R. HOLMES — 27638 — REGISTERED PROFESSIONAL ENGINEER

D-SP-703X	REVISION	1 ADD. DUST COLL. & ITEM 26 & ITEMS 8 & 9 : TOTAL QUAN. WERE 1 4-28-78	2 ITEM 2 WAS 150 HP & 11-23-78

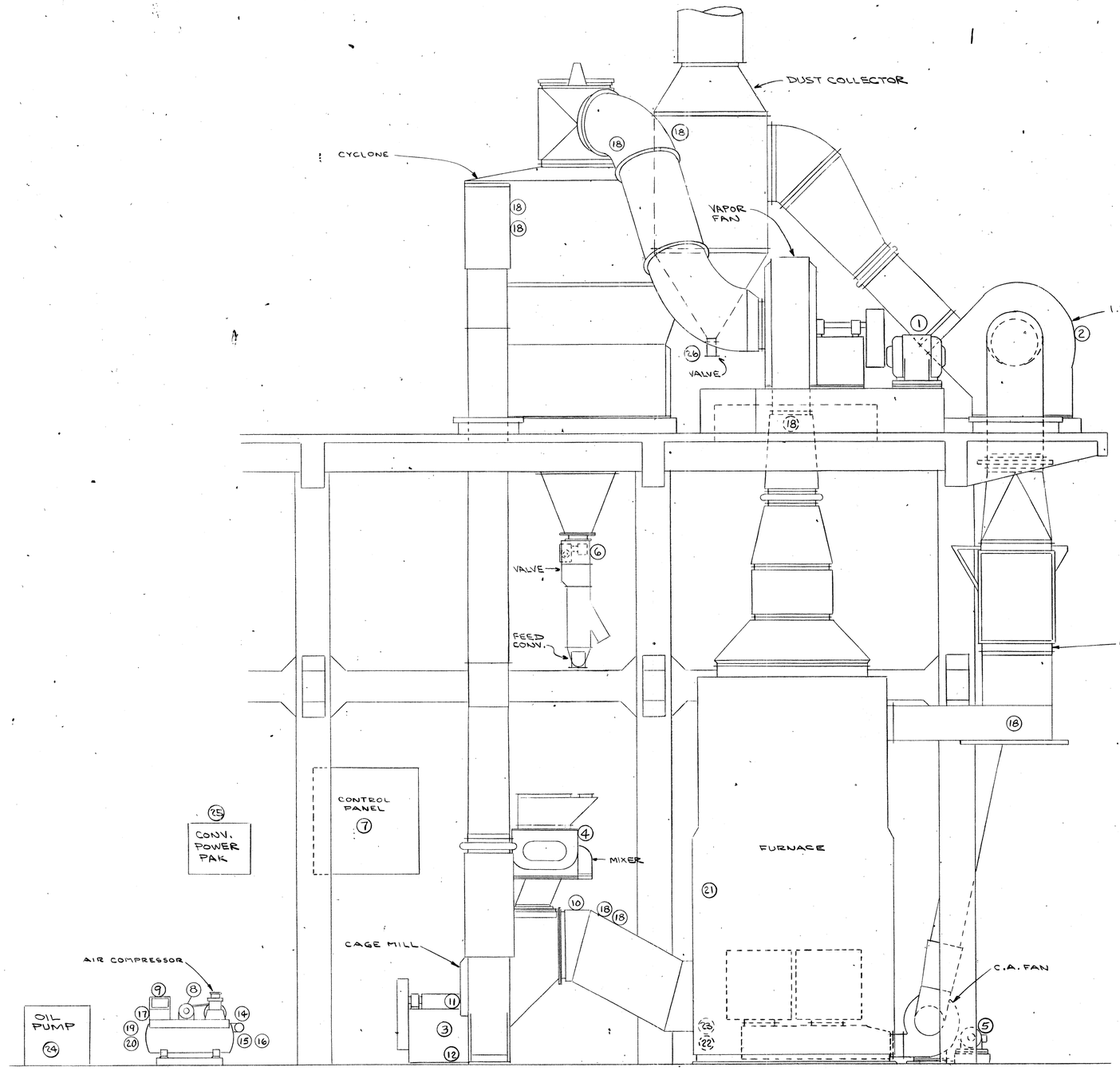

ITEM	POWER REQUIREMENTS	QUAN. PER UNIT	TOTAL 2-UNITS
26	DUST COLL. VALVE ½ HP 1 PH. 60 CY. 115V	1	2
24	OIL PUMP 5 HP. 3PH. 60CY. 460V.	—	2
1	VAPOR FAN MOTOR 150 HP. 3PH. 60 CY. 460 V.	1	2
2	I.D. FAN MOTOR 200 HP. 3PH. 60 CY. 460 V.	1	2
3	CAGE MILL MOTOR 30 HP. 3PH. 60 CY. 460 V.	1	2
4	MIXER MOTOR 40 HP. 3PH. 60 CY. 460 V.	1	2
5	C.A. FAN MOTOR 15 HP. 3PH. 60 CY. 460 V.	1	2
6	D.F. VALVE MOTOR ¾ HP. 3PH. 60 CY. 460 V.	1	2
7	CONTROL PANEL 20 AMPS. 1PH. 60CY. 115 V.	1	2
8	AIR COMPRESSOR 10 HP. 3PH. 60CY. 460 V.	—	2
9	AIR DRYER ½ HP. 1PH. 60 CY. 115 V.	—	2
25	CONV. POWER PAK 7½ HP. 3PH. 60CY. 460V.	1	2
	WATER REQUIREMENTS		
10	HOT GAS DUCT 1¼" PIPE 80 PSI. 25 GPM.	1	2
11	C.M. BEARING SUPPLY ½" PIPE FREE FLOW 1 GPM.	1	2
12	C.M. BEARING DRAIN 1" PIPE FREE FLOW	1	2
13	MIXER 1¼" PIPE 80 PSI. 25 GPM.	1	2
14	AFTER COOLER SUPPLY ½" PIPE 80 PSI. 3 GPM.	—	1
15	AFTER COOLER DRAIN ½" PIPE FREE FLOW	—	1
16	AFTER COOLER TRAP ½" PIPE FREE FLOW	—	1
17	AIR DRYER TRAP ½" PIPE FREE FLOW	—	1
18	FOG SPRAY CONNECTION 2" PIPE COUPLING	8	16
19	WATER COOLED CONDENSER SUPPLY ½" PIPE 80 PSI. 1 GPM.	—	1
20	WATER COOLED CONDENSER DRAIN ½" PIPE FREE FLOW	—	1
	COMPRESSED AIR SUPPLY *		
21	SOOT BLOWERS 1¼" PIPE 200 PSI. 30 SCFM.	1	2
	NATURAL GAS SUPPLY		
22	GAS BURNERS 4" PIPE 15 PSI. 30,000 SCFH.	1	2
	#2 FUEL OIL SUPPLY **		
23	OIL BURNERS 1" PIPE 300 PSI 1406 #/HR.	1	2

* COMPRESSED AIR SUPPLY & PIPING, FOR CONTROLS FOR 2 UNITS, FURNISHED & INSTALLED BY CE.

** #2 FUEL OIL INCREASED PRESSURE & PIPING, FOR CONTROLS FOR 2 UNITS, FURNISHED & INSTALLED BY CE.

BINKLEY & HOLMES, INC. Consulting Engineers
☑ NO EXCEPTIONS NOTED
☐ EXCEPTIONS NOTED
REVISE AND RESUBMIT FOR DISTRIBUTION
☐ RETURNED FOR CORRECTION
Review does not relieve contractor of responsibility for conformity with contract requirements, correct details and fit of parts when assembled.
BINKLEY & HOLMES, INC. BY _____ DATE 12/20/78
CITY OF HOUSTON BY _____ DATE _____

CITY OF HOUSTON
DEPT. OF PUBLIC WORKS WASTEWATER DIVISION
REVIEWED FOR GENERAL CONFORMANCE WITH DESIGN CONCEPT OF PROJECT AND GENERAL COMPLIANCE WITH THE CONTRACT DRAWINGS SPECIFICATIONS, AND DOCUMENTS.
☑ NO EXCEPTION
☐ EXCEPTIONS AS NOTED
☐ REJECTED - REVISE AND RESUBMIT
Review of shop drawings shall in no way relieve the contractor of responsibility for deviation from requirements of contract documents, nor for errors or omissions in shop drawings. Contractor is responsible for confirming and correlating dimensions at job site, for information which pertains to fabrication processes or construction techniques, for fit of parts when assembled, and for coordination of work of all trades. This review does not supercede or override laboratory analysis or test reports.
BY: _____
DATE: 12-4-78

ASBUILT SHOP DRAWING

W. W. RECORDS MICROFILM DATE: 6/26/82

JOB NO. 3304-DS
RAYMOND DIVISION, CHICAGO, ILL. CONTR. NO. 41277

POWER, WATER, GAS, OIL & AIR REQ.
FOR ALMEDA SIMS PLANT
CITY OF HOUSTON, TEXAS

SCALE 1/8" = 1'-0" DATE 4-23-76
DRAWN BY E CHECKED BY
TRACED BY APPROVED J.V. 9/30/76

THIS DRAWING IS THE PROPERTY OF COMBUSTION ENGINEERING, INC. AND IS NOT TO BE REPRODUCED, OR USED TO FURNISH ANY INFORMATION FOR MAKING OF DRAWINGS OR APPARATUS EXCEPT WHERE PROVIDED FOR BY AGREEMENT WITH SAID COMPANY.

DRAWING NO. D-SP-703X-2

DWG. NO. 18045 (SHT. NO. 45 OF 5)

DIETZGEN No. 136-3 AGEPROOF

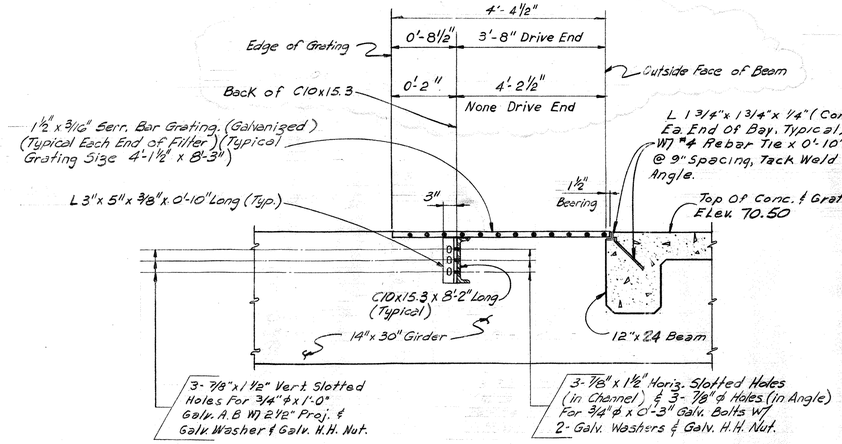

SECTION A/46 AS SHOWN (TYPICAL 6 PLACES)
Scale: ¾" = 1'-0"

SECTION A'/46 OPP. HAND (TYPICAL 6 PLACES)
Scale: ¾" = 1'-0"

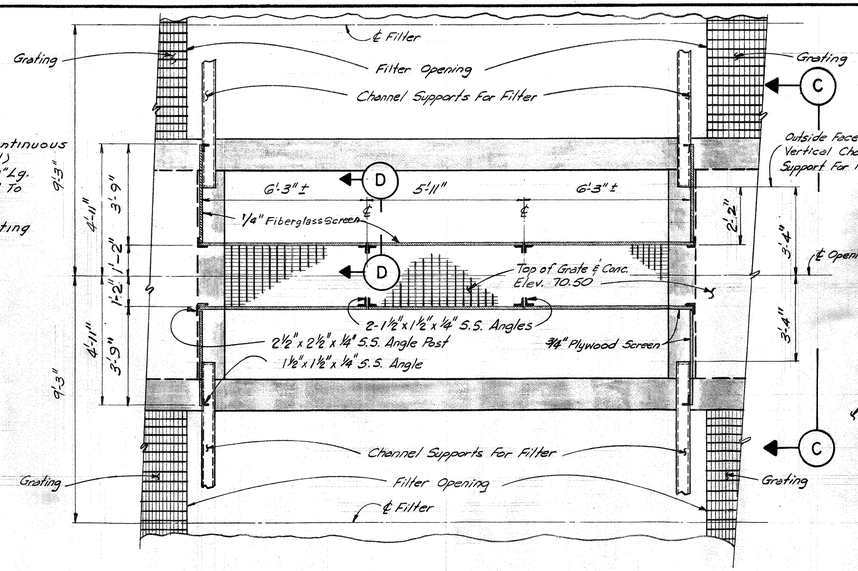

PLAN – REMOVABLE PLYWOOD SPLASH GUARD
Scale: 3/8" = 1'-0"

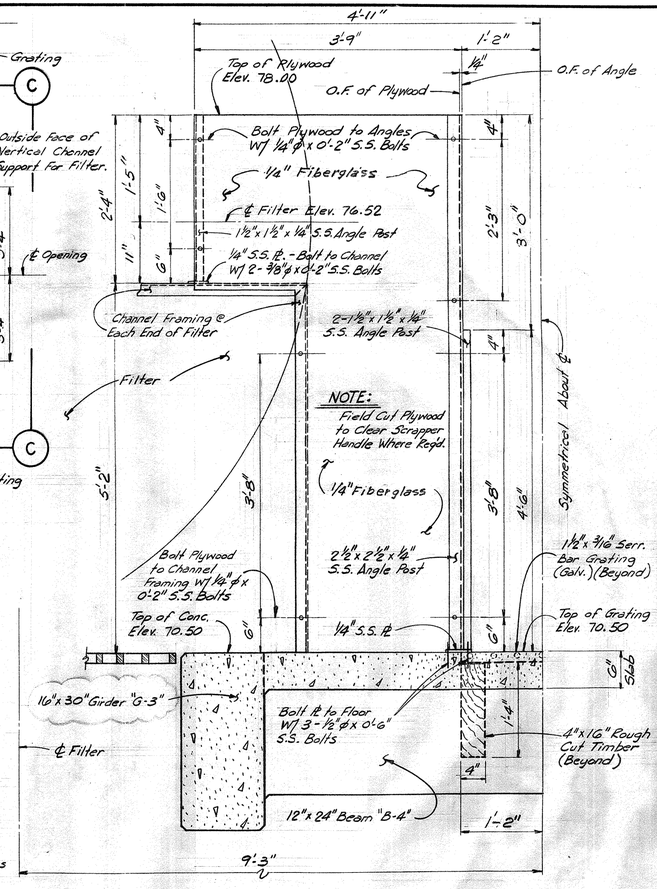

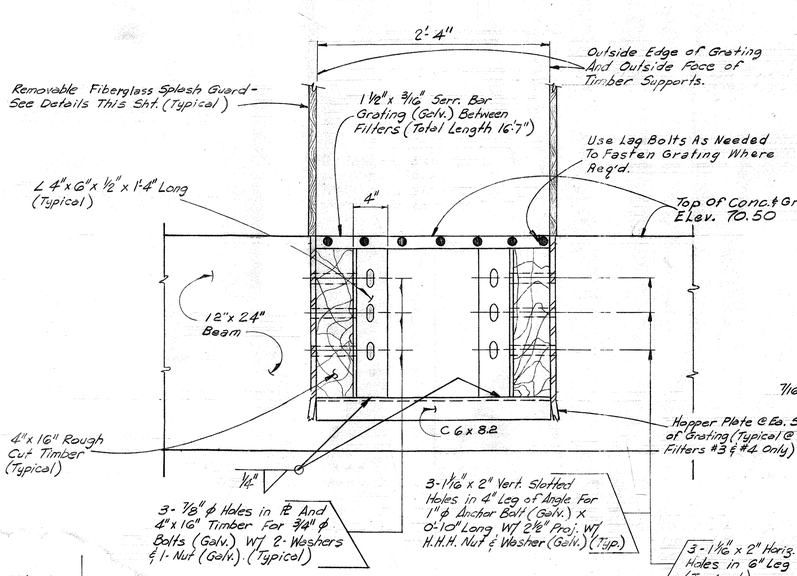

PLAN – END POST
Scale: 3" = 1'-0"

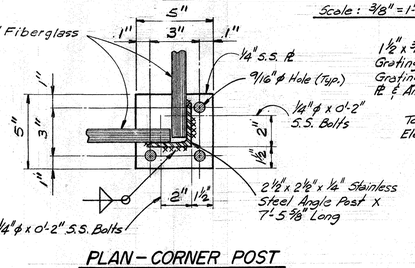

PLAN – CORNER POST
Scale: 3" = 1'-0"

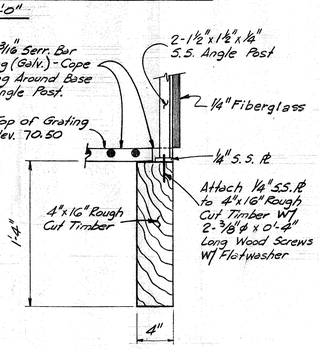

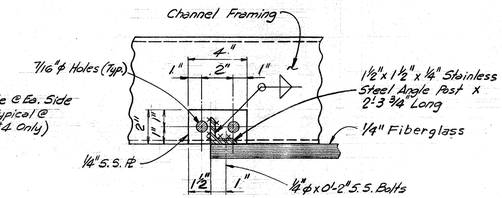

PLAN – END POST
Scale: 3" = 1'-0"

SECTION B/46
Scale: 1½" = 1'-0"
(TYPICAL 6 PLACES)

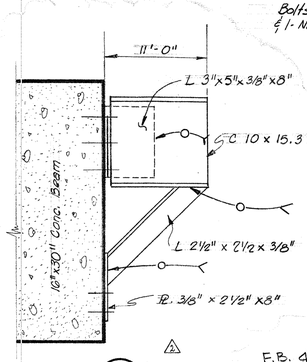

SECTION E/46
Scale: 1½" = 1'-0"
3 THUS
3 OPPOSITE HAND

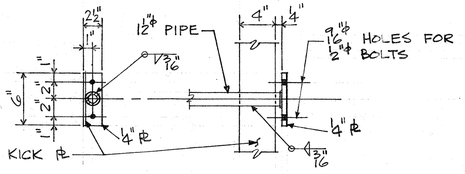

TYPICAL HANDRAIL BASE ℄ DETAIL
SCALE: 1½" = 1'-0"

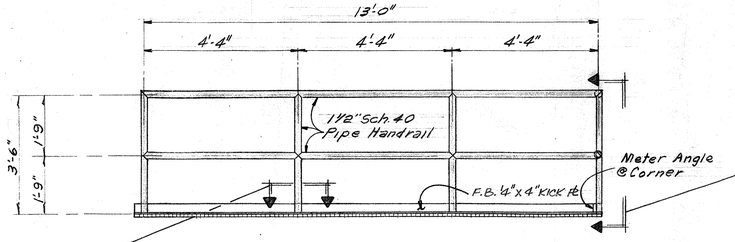

HANDRAIL DETAILS
Scale: ½" = 1'-0"

SECTION C
Scale: 1" = 1'-0"

SECTION D
Scale: 1½" = 1'-0"

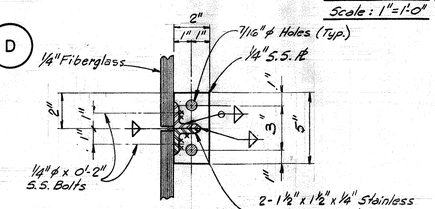

PLAN – CENTER POST
Scale: 3" = 1'-0"

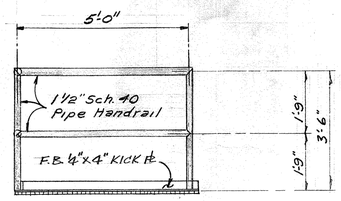

NOTE: 4" x 16" Timber To Be Creosoted (12 lb/cf) AWPA C1-74, Dense Structural Grade T2 L0 S.P.I.B.

REV. NO.	DATE	DESCRIPTION	DESIGN	CHECKED
⚠	5-79	Construction Revision Modified Grating Support.	W.G.W.	H.J.K.
⚠	3-77	General Modifications to Dimensions	J.C.S.	S.R.S.

STATE OF TEXAS — JAMES A. BINKLEY — 24282 — REGISTERED PROFESSIONAL ENGINEER

STATE OF TEXAS — PAUL R. HOLMES — 27638 — REGISTERED PROFESSIONAL ENGINEER

CITY OF HOUSTON
DEPARTMENT OF PUBLIC WORKS

ALMEDA SIMS SLUDGE DISPOSAL PLANT—1973

FILTER ROOM
GRATING, HANDRAIL, AND SPLASH GUARD DETAILS

RECOMMENDED FOR APPROVAL:
BINKLEY & HOLMES, INC., CONSULTING ENGINEERS

APPROVED:
CHIEF ENGINEER — ASST. CHIEF ENGINEER
ASST. DIRECTORS OF PUBLIC WORKS
DIRECTOR OF PUBLIC WORKS

DESIGNED BY: V. Jarri
DRAWN BY: G. McVicar
CHECKED BY: M.D.J. & S.R.S.
SCALE: As Shown
DATE: Dec. 2, 1973
SHEET 46 OF 200 SHEETS
DRAWING NO. 18045

D-FS-905 | REVISIONS | 1 | ITEM 16 QTY WAS 2, ITEM 27 QTY WAS 6. 4-12-78 EGK

BILL OF MATERIAL

ITEM	QTY.	DESCRIPTION
1	2	PEABODY BURNER, TYPE ML-12, DUAL-FUEL, CAP. 12,000,000 BTU/HR.
2	2	IGNITOR W/ IGNITION TRANSFORMER, TYPE FPM PEABODY
3	2	IGNITION CABLE, PEABODY
4	2	PUSHBUTTON STATION, IGNITION, FIREYE TYPE 51CQ1 MODEL 1006
5	2	SHUT-OFF COCK, 3/4" DE ZURIK # 0075, FIG425, S, 1, RS51, FIG483
6	2	FLEXIBLE HOSE, GAS, PEABODY, 3/4"
7	2	HYDRAMOTOR GAS VALVE, 1", GENERAL CONTROLS # H118AF122
8	3	SHUT-OFF COCK, 1", DE ZURIK # 0100, FIG425, S, 1, RS51, FIG483
9	1	PILOT GAS PRESSURE REGULATOR, FISHER TYPE 630, 2" NPT
10	1	OIL PUMP SET, PEABODY MODEL LOD-7-300 (SERVES 2 FURNACES)
11	4	PRESSURE GAGE (0-30 PSI) MARSHALLTOWN FIG. NO. 24 (4½" DIAL)
12	1	MAIN GAS PRESSURE REGULATOR, 2", FISHER # 298T-EK-61L WITH PILOT & FILTER
13	2	ADJUSTABLE PORT VALVE WITH AIR MOTOR, 2", NORTH AMERICAN #1005 W/ 1600 AIR MOTOR
14	7	SHUT OFF COCK, 2", DE ZURIK # 0200, FIG 435, S, 1, RS51, FIG483
15	2	SAFETY SHUT-OFF VALVE, 1½", C-E CONTROLS #TV-8080-2 (MAXON)
16	3	SHUT-OFF COCK, 3", DE ZURIK # 0300, FIG435, S, 1, RS51, FIG483
17	2	SHUT-OFF COCK, ½", 600 PSI, POWELL FIG. 2612 W.O.G.
18	2	CHECK VALVE, ½" IPS, 600 LB., POWELL #126 W.O.G.
19	2	FLAME SCANNER, FIREYE #45UV-1 MODEL 1020
20	2	SUPERVISORY COCK, 1" IPS, FIREYE # FM4GT
21	3	GAGE COCK, ¼", MARSHALLTOWN FIG. 125
22	2	SAFETY SHUT-OFF VALVE, 1" IPS, MAXON SERIES 730, WITH SPDT SWITCH
23	2	PRESSURE GAGE, OIL, 0-600 PSI, MARSHALLTOWN FIG. 24, 4½" DIAL
24	1	DIFFERENTIAL PRESSURE REDUCING & REGULATING VALVE, 1" IPS, CASHCO 1000 HP-6+1
25	3	PLUG VALVE, 3/4", ROCKWELL-NORDSTROM FIG. 2024
26	3	LOW FIRE COCK, ¼", 3-WAY, 2-PORT W/ WRENCH RAYMOND PART NO. FA-2000
27	7	OIL SHUT-OFF VALVE, 1" IPS, ROCKWELL-NORDSTROM FIG. 2024
28	2	NEEDLE VALVE, ¼" IPS, MARSHALLTOWN FIG. 200
29	1	OIL CONTROL VALVE, 3/4", NORTH AMERICAN #1005 W/ #1600 AIR MOTOR
30	1	GLOBE VALVE, ¼", POWELL FIG. 171
31	1	GLOBE VALVE, ½" POWELL FIG. 171
32	2	HEAT INSULATING NIPPLE, FIREYE # 35-127
33	2	BLACK IRON NIPPLE STD. WT. 2" LG. WITH BLACK IRON STD. WT. COUPLING 1" I.P.S.

ALL ITEMS SHOWN ARE FOR ONE FURNACE UNIT, EXCEPT FOR ITEM 10, CONTRACT CALLS FOR (2) TWO FURNACE UNITS, DRAWING SHOWS (1) ONE UNIT.

REFERENCE DWGS:

CONTROL WIRING DIAGRAM — D-FS-905A
CONTROL PANEL ARRANGEMENT — D-FS-905C
SCHEMATIC CONTROL DIAGRAM — D-FS-905B
CONTROL PANEL BILL OF MATERIAL — D-FS-905D

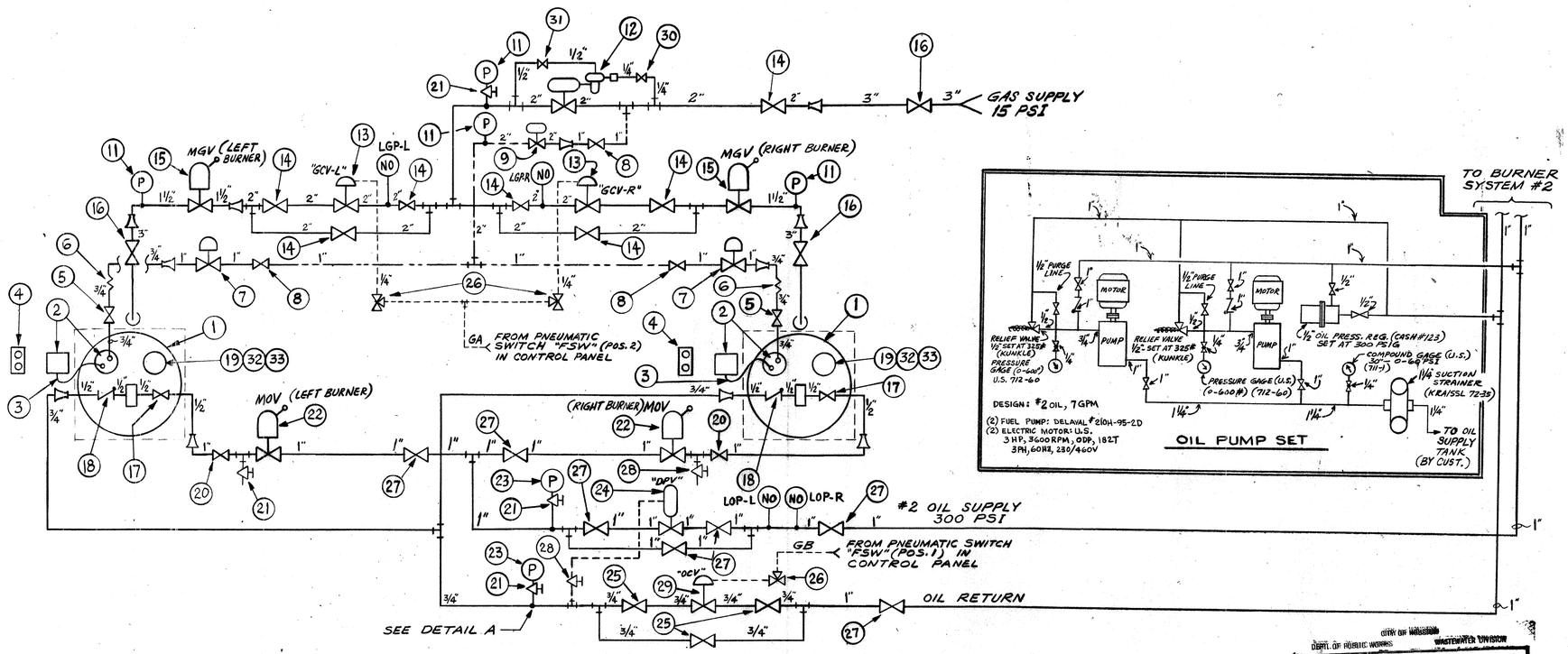

CITY OF HOUSTON
DEPT. OF PUBLIC WORKS — WASTEWATER DIVISION

REVIEWED FOR GENERAL CONFORMANCE WITH DESIGN CONCEPT OF PROJECT AND GENERAL COMPLIANCE WITH THE CONTRACT DRAWINGS SPECIFICATIONS, AND ORDINANCES.

- [X] AND EXCEPTION
- [ ] EXCEPTIONS AS NOTED
- [ ] RESUBMIT - REVISE AND RESUBMIT

Review of shop drawings shall in no way relieve the contractor of responsibility for deviation from requirements of contract documents, error or omissions in shop drawings. Contractor is responsible for confirming and correlating dimensions at job site, for information which pertains to fabrication processes or construction techniques, for coordination between trades and the coordination of work of all trades. This review does not supersede or override laboratory analysis or test results.

BY: [illegible]
DATE: 12-4-78

PIPING NOTE:

PIPING LAYOUT AND SIZING AS SHOWN ON THIS DRAWING IS BASED ON MINIMUM PIPE LENGTH WITH STRAIGHT RUNS USED WHEREVER POSSIBLE. A MINIMUM AMOUNT OF ELBOWS SHOULD BE USED, USING 90° LONG RADIUS ELBOWS. CLEAN COMMERCIAL STEEL PIPE (NON-GALVANIZED), SHOULD BE USED UTILIZING ASTM SCHEDULE 30 OR 40 IN ALL CASES. ALL MANIFOLDS SHOULD BE CENTER FED.

CAUTION:

EXCESSIVELY LONG PIPE RUNS OR LARGE QUANTITIES OF FITTINGS MAY NECESSITATE INCREASING PIPE SIZES WHERE NECESSARY TO REDUCE LINE PRESSURE LOSSES.

ALL EQUIPMENT AND ITEMS LABELED ARE SUPPLIED BY C-E RAYMOND/BARTLETT-SNOW/EHRSAM.

ALL PIPE, FITTINGS AND ACTUAL ASSEMBLY OF PIPING SYSTEM TO BURNERS & FROM PUMP SET TO BURNERS ARE BY C-E CONTRACTOR.
ALL PIPING FROM PUMP SET TO TANK ARE BY CUSTOMER'S CONTRACTOR.

NOTE:
LOCATE TAP ON TOP OR SIDE OF PIPE PARALLEL TO VALVE SHAFT WITH UNDISTURBED STRAIGHT RUNS *UPSTREAM AND DOWNSTREAM.

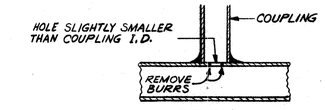

DETAIL A

INSTALLATION OF PRESSURE TAPS
*MINIMUM 5 PIPE DIAMETERS UPSTREAM
MINIMUM 2 PIPE DIAMETERS DOWNSTREAM

THIS IS A SCHEMATIC DWG, NOT A PIPING DWG. REFER TO VENDOR CATALOGS AND INDUSTRY STANDARDS FOR PROPER INSTALLATION OF PIPING AND COMPONENTS. PRESSURES AND TEMPERATURES ARE PER PROPOSAL AND CONTRACT.

BURNER PIPING KEY

1. ———— MAIN FUEL LINES (GAS, OIL, ETC.)
2. — — — COMBUSTION AIR LINES
3. — · — · — PILOT FUEL LINES
4. — - — - — IMPULSE LINES
5. WHEN SUPERVISORY AIR IS REQUIRED FOR FM COCK SYSTEMS THE COMBUSTION AIR LINE SYMBOL WILL BE APPLICABLE.
6. ALL PIPING IS SHOWN IN SCHEMATIC FORM. ACTUAL ASSEMBLY ARRANGEMENTS, ROUTING, AND MISCELLANEOUS FITTINGS ARE SUBJECT TO EQUIPMENT LAYOUT AND FIELD CONDITIONS.

SHIRLEY & HOLMES, INC. Consulting Engineers
- [X] NO EXCEPTIONS NOTED
- [ ] EXCEPTIONS NOTED
- [ ] MADE AS CORRECT FOR RETENTION
- [ ] RETURNED FOR CORRECTION

Review does not relieve contractor of responsibility for conformity with contract requirements, correct details and fit of parts which assemblies.

SHIRLEY & HOLMES, INC. BY [illegible] DATE 6/22/78
CITY OF HOUSTON BY [illegible] DATE 12-4-78

ASBUILT SHOP DRAWING

JOB NO. 3304-DS
SERIAL NO. 77030 & 77031 CONTRACT NO. 4/277

BURNER PIPING SCHEMATIC
FOR CITY OF HOUSTON
HOUSTON, TEXAS

SCALE NONE
DRAWN BY EGK
TRACED BY —
DATE 1/6/78
CHECKED BY [illegible]
APPROVED [illegible] 1/11/78

THIS DRAWING IS THE PROPERTY OF COMBUSTION ENGINEERING, INC.
AND IS NOT TO BE REPRODUCED, OR USED TO FURNISH ANY INFORMATION FOR MAKING OF DRAWINGS OR APPARATUS EXCEPT WHERE PROVIDED FOR BY AGREEMENT WITH SAID COMPANY.

DRAWING NO. D-FS-905-1

W. W. RECORDS MICROFILM DATE 6/26/78

DWG. NO. 18045 H (SHT. NO. 46 OF)

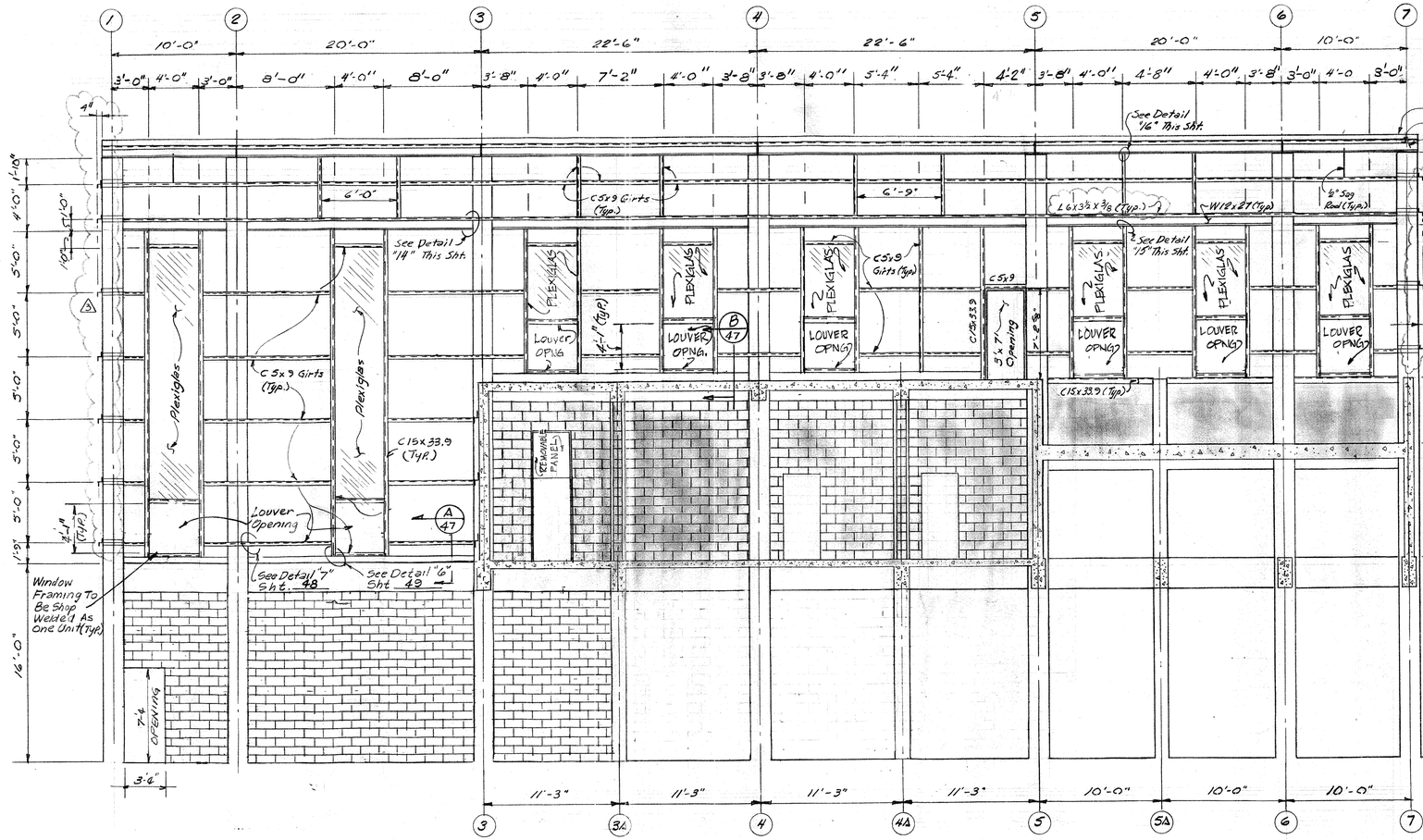

SOUTH ELEVATION (Column Line "H")

Scale: 3/16" = 1'-0"

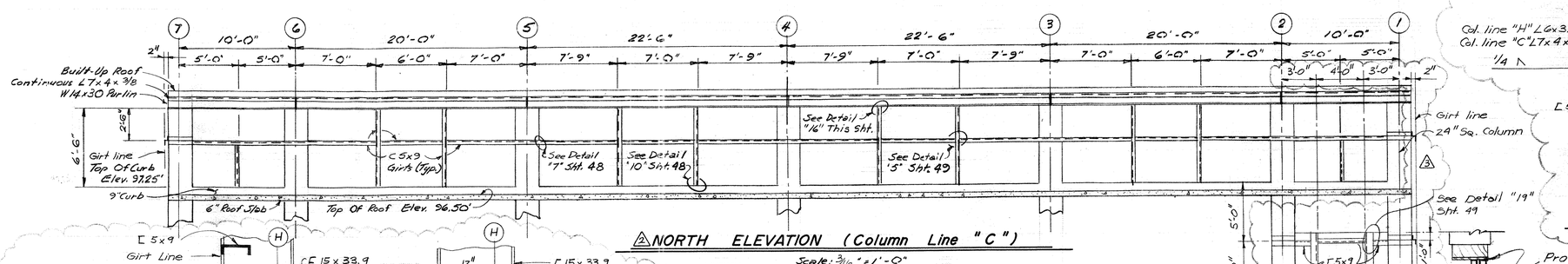

NORTH ELEVATION (Column Line "C")

Scale: 3/16" = 1'-0"

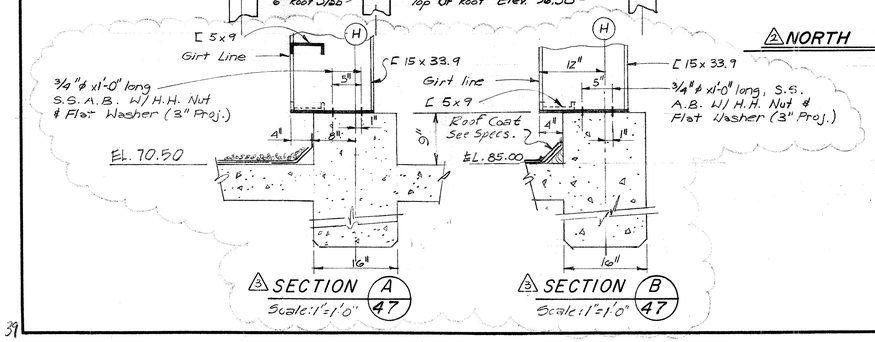

SECTION A 47

Scale: 1"=1'-0"

SECTION B 47

Scale: 1"=1'-0"

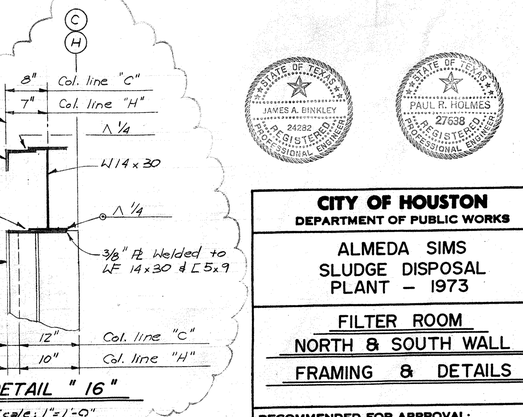

DETAIL "14"

Scale: 1½" = 1'-0"

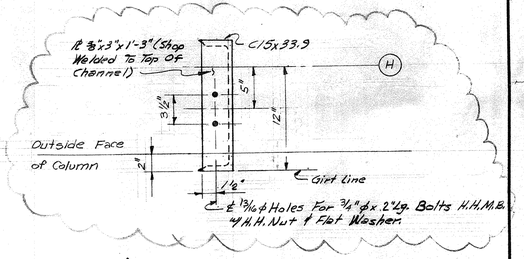

DETAIL "15"

Scale: 1½" = 1'-0"

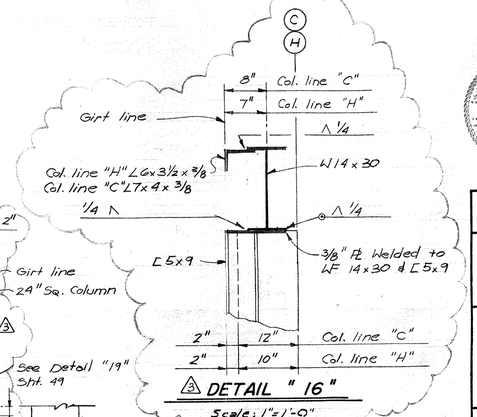

DETAIL "16"

Scale: 1"=1'-0"

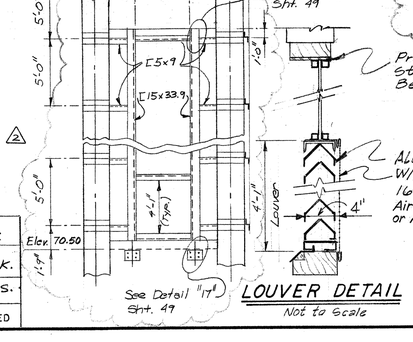

LOUVER DETAIL

Not to Scale

REV. NO.	DATE	DESCRIPTION	DESIGN	CHECKED
3	11-78	Construction Revision Rev. Girt Framing Details	J.L.R	H.J.K.
2	11-78	Addenda Added Siding Between Col. Lines 1&2; 6&7 on North Elev.	J.L.R.	H.J.K.
1	3-77	General Modifications to Dimensions	J.C.S.	S.R.S.

JAMES A. BINKLEY — 24282 — REGISTERED PROFESSIONAL ENGINEER — STATE OF TEXAS

PAUL R. HOLMES — 27638 — REGISTERED PROFESSIONAL ENGINEER — STATE OF TEXAS

CITY OF HOUSTON
DEPARTMENT OF PUBLIC WORKS

ALMEDA SIMS SLUDGE DISPOSAL PLANT – 1973

FILTER ROOM
NORTH & SOUTH WALL
FRAMING & DETAILS

RECOMMENDED FOR APPROVAL:
BINKLEY & HOLMES, INC., CONSULTING ENGINEERS

APPROVED:
CHIEF ENGINEER — ASST. CHIEF ENGINEER
ASST. DIRECTORS OF PUBLIC WORKS
DIRECTOR OF PUBLIC WORKS

DESIGNED BY: V. Jarri
DRAWN BY: C.A. MARRULLIER
CHECKED BY: M.D.J. & S.R.S.
SCALE: As Shown
DATE: Dec. 9 1973
SHEET 47 OF 200 SHEETS
DRAWING NO. 18045

D-SI-1763 | REVISIONS | 1 | RB 1-2-78 E 5-1-78

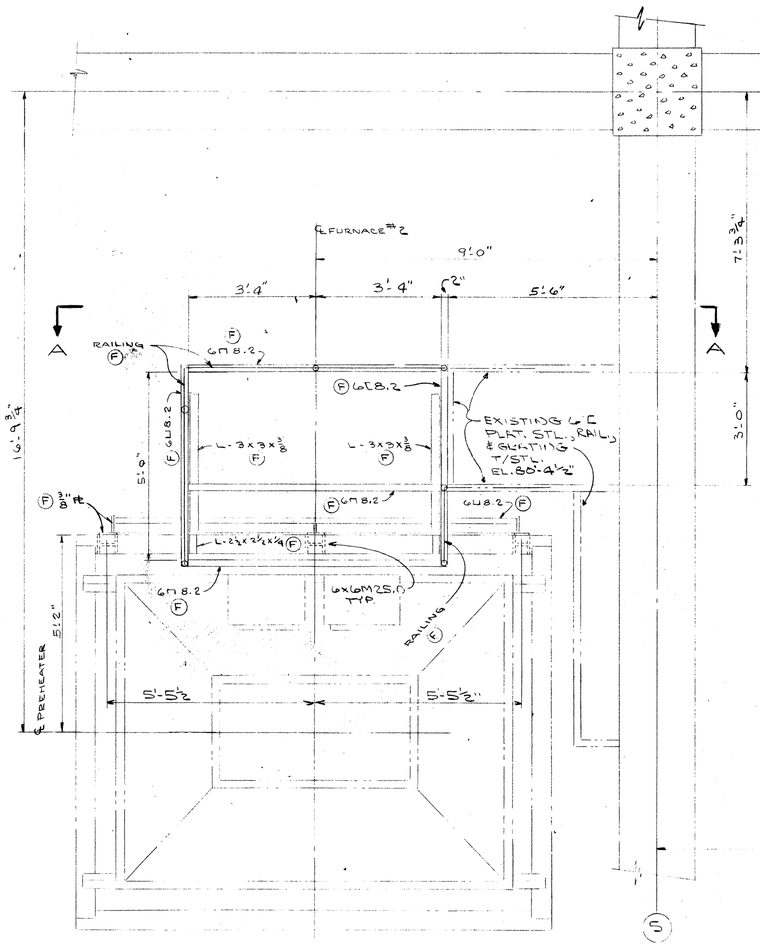

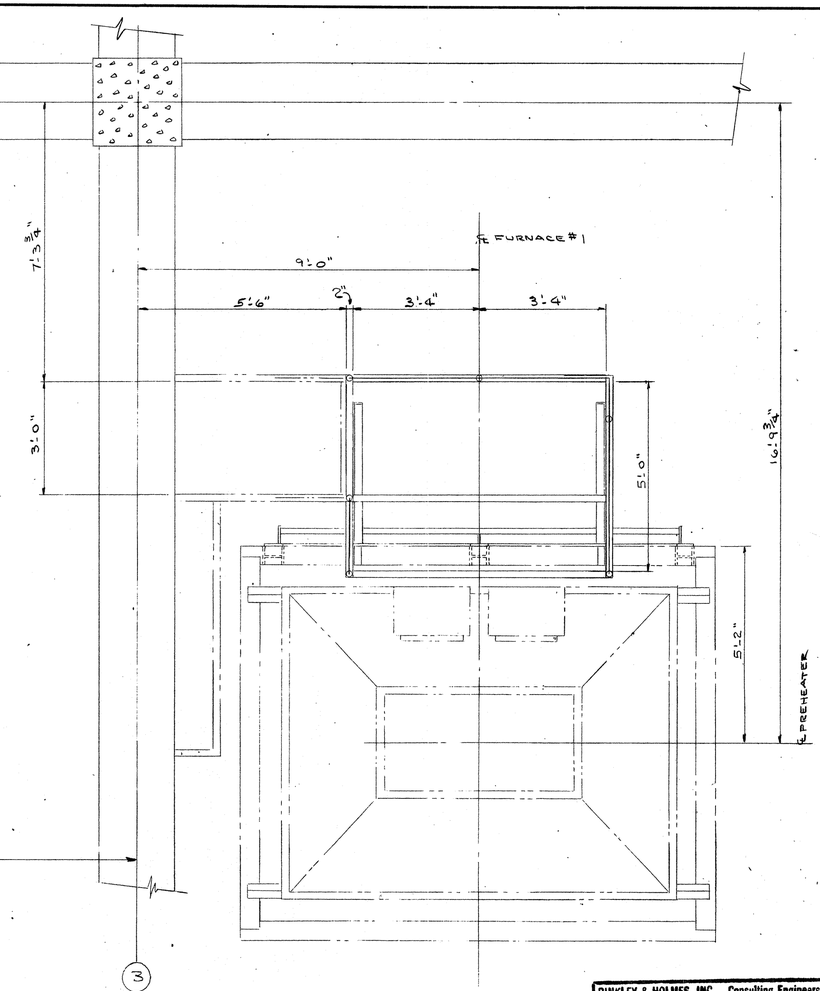

45'-0"

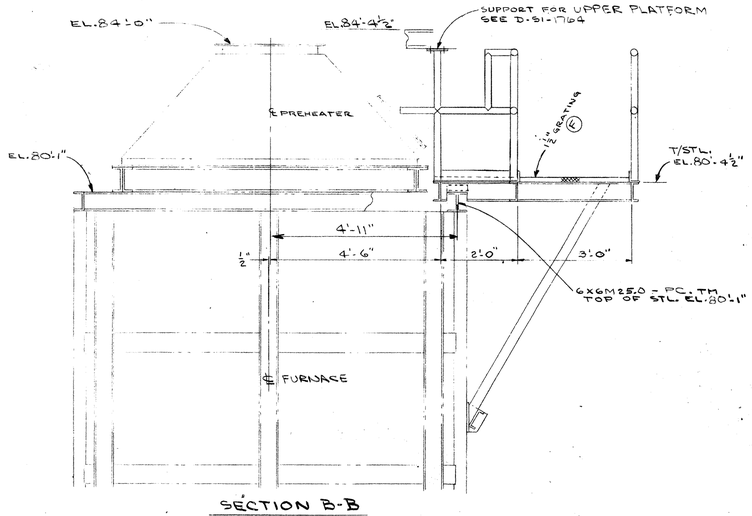

SECTION B-B

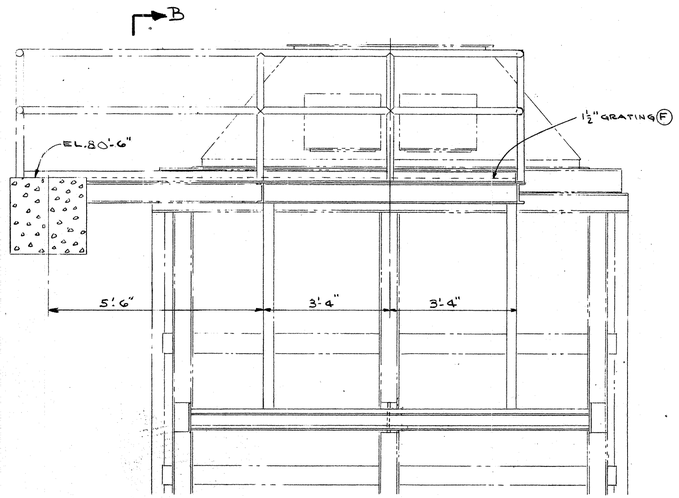

SECTION A-A
AS SHOWN FOR UNIT 2
OPPOSITE FOR UNIT 1

GRATING, SUPPORTS, RAILINGS & LADDER MARKED (F) ARE TO BE FURNISHED & INSTALLED IN FIELD BY CE.

SEE D-SI-1764 FOR UPPER PLATFORM

GRATING, RAILING & LADDER TO BE HOT DIP GALVANIZED AFTER FABRICATION.

SUPPORT STEEL TO BE PAINTED.

CITY OF HOUSTON
DEPT. OF PUBLIC WORKS — WASTEWATER DIVISION

REVIEWED FOR GENERAL CONFORMANCE WITH DESIGN CONCEPT OF PROJECT AND GENERAL COMPLIANCE WITH THE CONTRACT DRAWINGS SPECIFICATIONS, AND DOCUMENTS.

☒ NO EXCEPTION
☐ EXCEPTIONS AS NOTED
☐ REJECTED - REVISE AND RESUBMIT

Review of shop drawings shall in no way relieve the contractor of responsibility for deviation from requirements of contract documents, nor for errors or omissions in shop drawings. Contractor is responsible for confirming and correlating dimensions at job site, for information which pertains to fabrication processes or construction techniques, for fit of parts when assembled, and for coordination of work of all trades. This review does not supercede or overrule laboratory analysis or test reports.

BY: [signature]
DATE: 12-4-78

BINKLEY & HOLMES, INC. Consulting Engineers
☑ NO EXCEPTIONS NOTED
☐ EXCEPTIONS NOTED
REVISE AND RESUBMIT FOR DISTRIBUTION
☐ RETURNED FOR CORRECTION
Review does not relieve contractor of responsibility for conformity with contract requirements, correct details and fit of parts when assembled.
BINKLEY & HOLMES, INC. BY [signature] DATE 6/13/78
CITY OF HOUSTON BY [signature] DATE 12-4-78

W. W. RECORDS MICROFILM DATE 6/6/1978

D-SI-1708

ASBUILT SHOP DRAWING

JOB NO. 3304-DS CONTRACT NO. 41277

PREHEATER - LOWER PLATFORM

FOR CITY OF HOUSTON

SCALE ½" = 1'-0" DRAWN BY [illegible] TRACED BY
DATE 7-15-77 CHECKED BY [illegible] APPROVED [signature] 6/1/78

THIS DRAWING IS THE PROPERTY OF COMBUSTION ENGINEERING, INC.
AND IS NOT TO BE REPRODUCED, OR USED TO FURNISH ANY INFORMATION FOR MAKING OF DRAWINGS OR APPARATUS EXCEPT WHERE PROVIDED FOR BY AGREEMENT WITH SAID COMPANY.

DRAWING NO. D-SI-1763-1

POST 126-3

DWG. NO. 18045 H (SHT. NO. 47 OF [illegible])

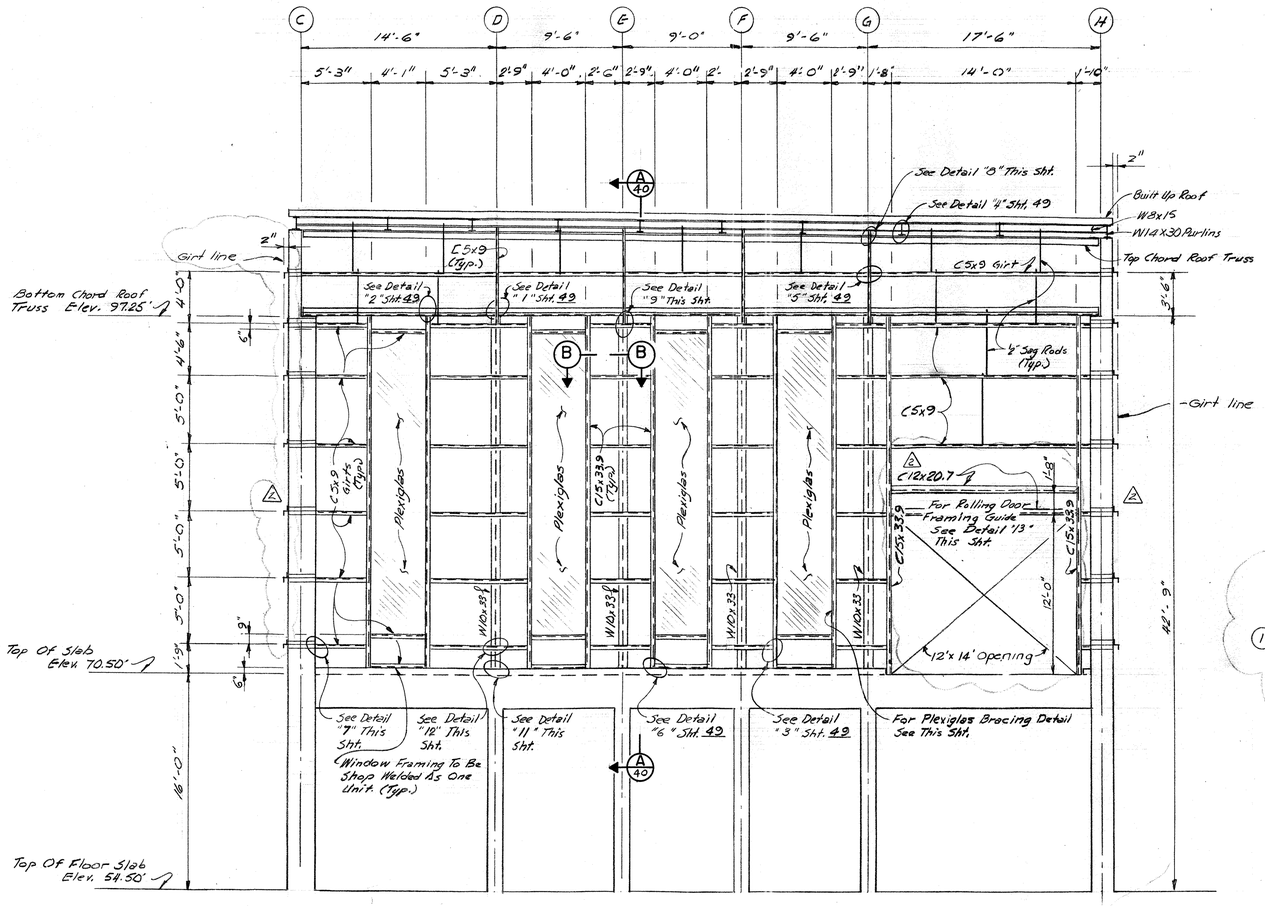

WEST ELEVATION (Column Line "1")

Scale: 3/16"=1'-0"

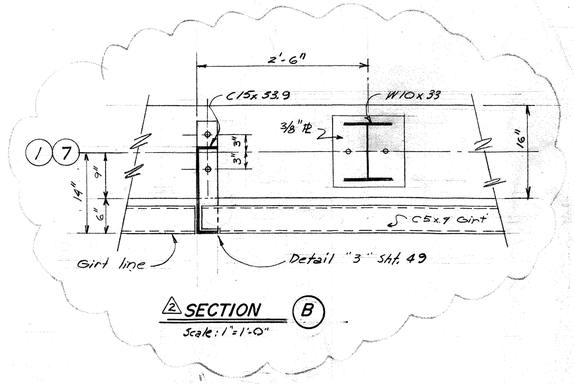

2 SECTION (B)

Scale: 1"=1'-0"

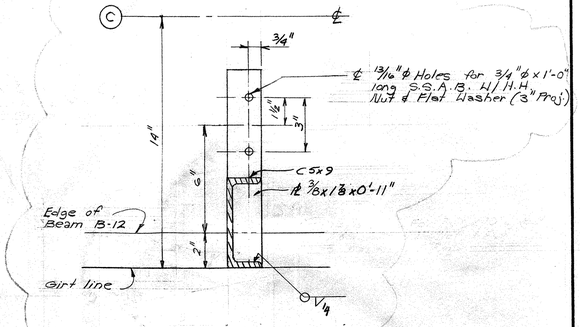

2 DETAIL "10"

Scale: 3"=1'-0"

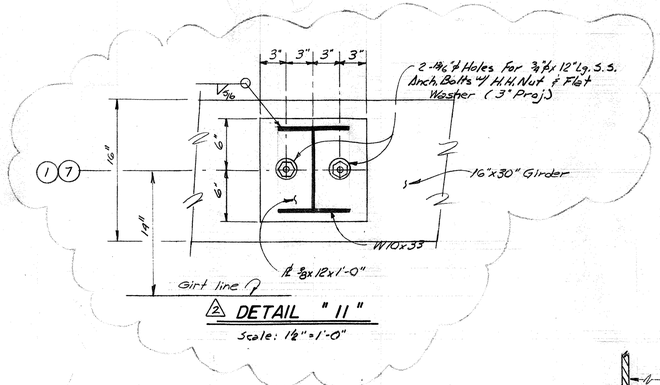

2 DETAIL "11"

Scale: 1½"=1'-0"

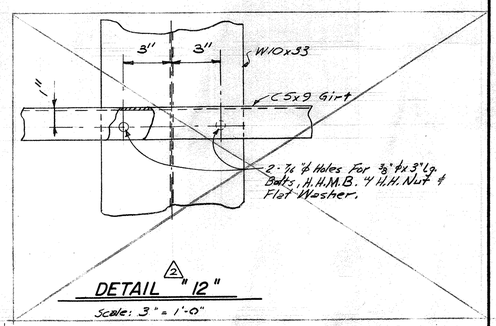

2 DETAIL "12"

Scale: 3"=1'-0"

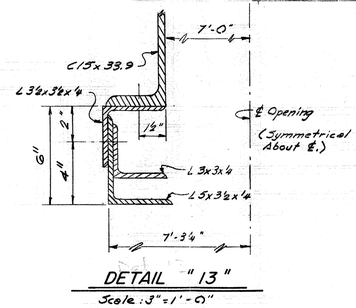

DETAIL "13"

Scale: 3"=1'-0"

Notes:
1. All Steel To Be Hot-Dip Galv. After Fabrication.

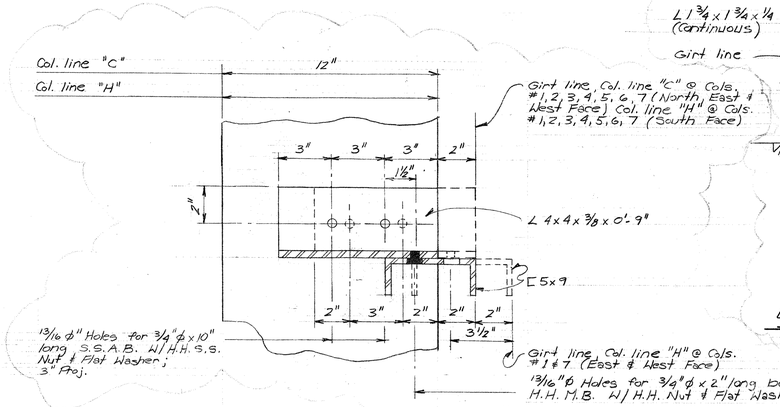

2 DETAIL "7"

Scale: 3"=1'-0"

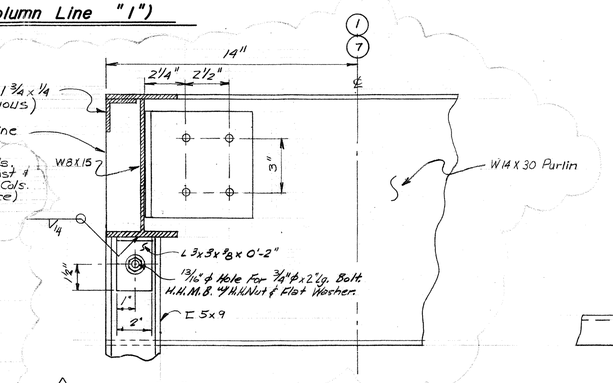

2 DETAIL "8"

Scale: 3"=1'-0"

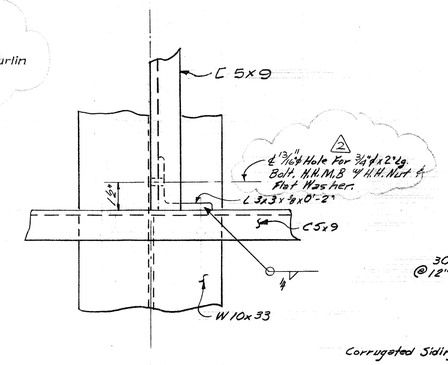

DETAIL "9"

Scale: 3"=1'-0"

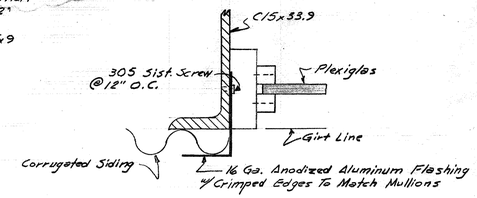

PLEXIGLAS BRACING DETAIL

Scale: 3"=1'-0"

REV. No.	DATE	DESCRIPTION	DESIGN	CHECKED
2	11-78	Construction Revisions Rev. Girt Framing & Details Deleted Detail "12" Added C12x20.7 For Rolling Door	J.L.R.	H. J. K.
1	3-77	General Modifications to Dimensions	J.C.S.	S.R.S.

CITY OF HOUSTON
DEPARTMENT OF PUBLIC WORKS

ALMEDA SIMS SLUDGE DISPOSAL PLANT – 1973

FILTER ROOM
WEST WALL

FRAMING & DETAILS

RECOMMENDED FOR APPROVAL:
BINKLEY & HOLMES, INC., CONSULTING ENGINEERS

APPROVED:
CHIEF ENGINEER — ASST. CHIEF ENGINEER
ASST. DIRECTORS OF PUBLIC WORKS
DIRECTOR OF PUBLIC WORKS

DESIGNED BY: V. Jaeki
DRAWN BY: CA. MARRULLIER
CHECKED BY: M. D. J & S.E.S.
SCALE: As Shown
DATE: Dec., 1973
SHEET 48 OF 200 SHEETS
DRAWING NO. 18045

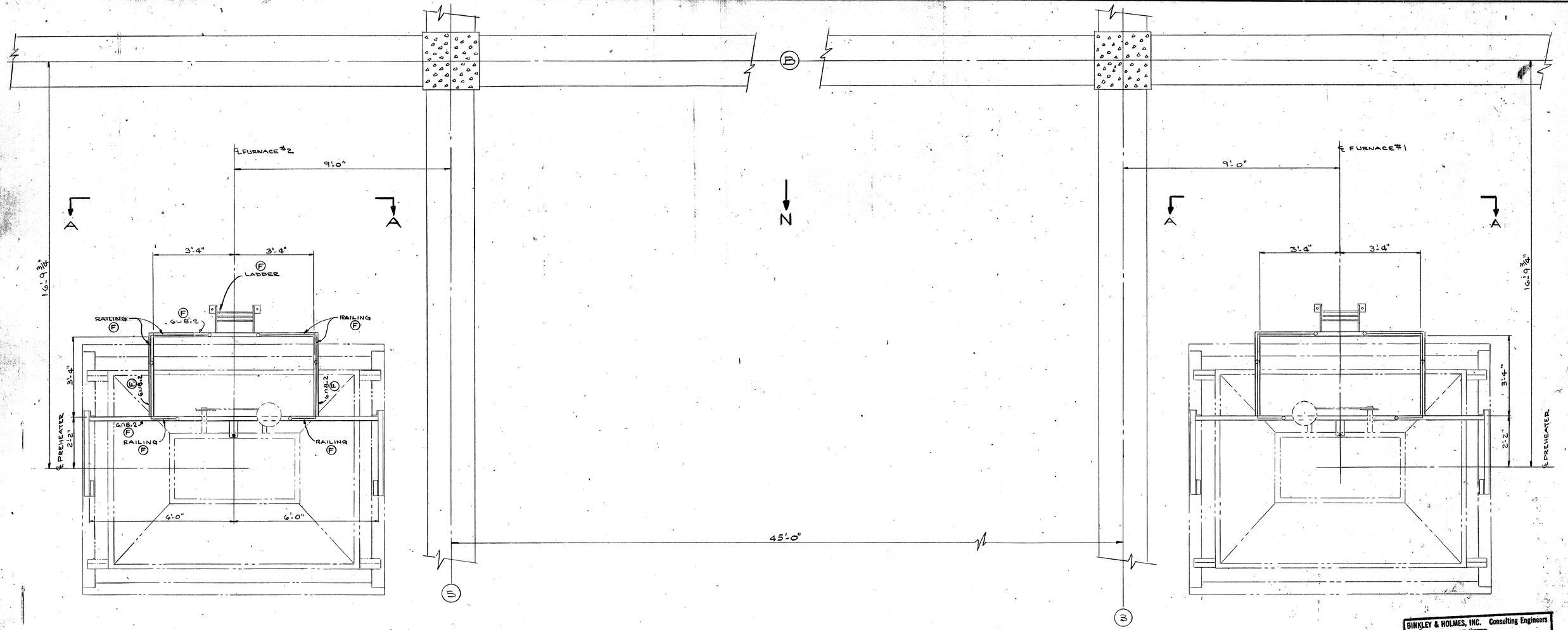

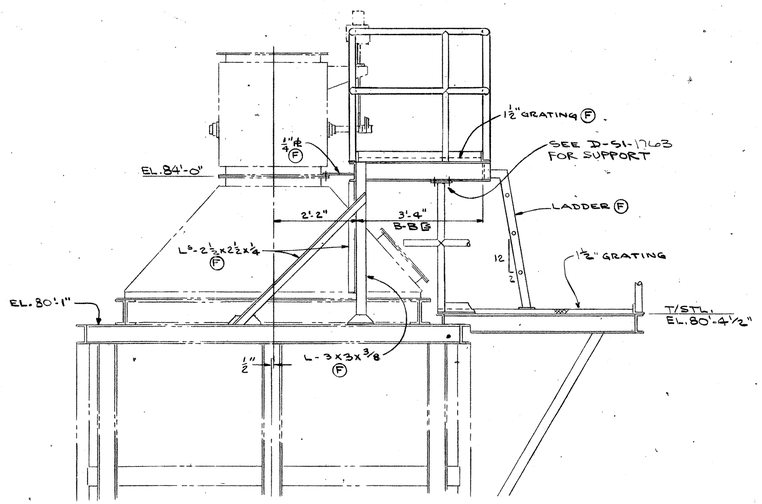

SECTION B-B

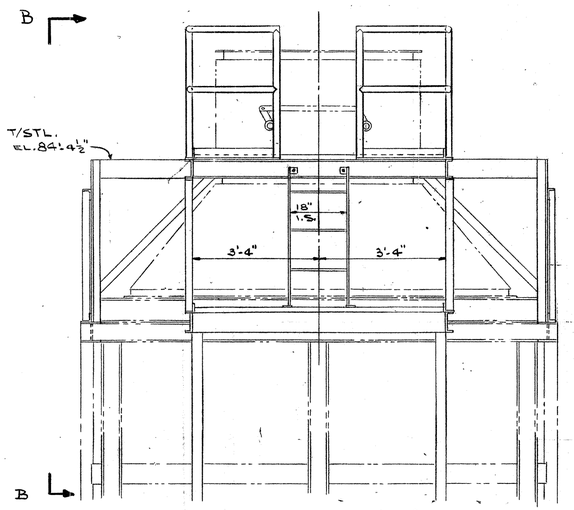

SECTION A-A

GRATING, SUPPORTS, RAILINGS & LADDER MARKED Ⓕ ARE TO BE FURNISHED & INSTALLED IN FIELD BY C.E.

SEE D-SI-1763 FOR LOWER PLATFORM.

GRATING, RAILING & LADDER TO BE HOT DIP GALVANIZED AFTER FABRICATION.

SUPPORT STEEL TO BE PAINTED.

BINKLEY & HOLMES, INC. Consulting Engineers
☑ NO EXCEPTIONS NOTED
☐ EXCEPTIONS NOTED
REVISE AND RESUBMIT FOR DISTRIBUTION
☐ RETURNED FOR CORRECTION
Review does not relieve contractor of responsibility for conformity with contract requirements, correct details and fit of parts when assembled.
BINKLEY & HOLMES, INC. BY _____ DATE 4/13/78
CITY OF HOUSTON BY _____ DATE 12-4-78

CITY OF HOUSTON
DEPT. OF PUBLIC WORKS WASTEWATER DIVISION
REVIEWED FOR GENERAL CONFORMANCE WITH DESIGN CONCEPT OF PROJECT AND GENERAL COMPLIANCE WITH THE CONTRACT DRAWINGS SPECIFICATIONS, AND DOCUMENTS:
☑ NO EXCEPTION
☐ EXCEPTIONS AS NOTED
☐ REJECTED - REVISE AND RESUBMIT
Review of shop drawings shall in no way relieve the contractor of responsibility for deviation from requirements of contract documents, nor for errors or omissions in shop drawings. Contractor is responsible for confirming and correlating dimensions at job site, for information which pertains to fabrication processes or construction techniques, for fit of parts when assembled, and for coordination of work of all trades. This review does not supercede or overrule laboratory analysis or test reports.
BY. _____
DATE: 12-4-78

W. W. RECORDS MICROFILM DATE 6/26/78

D-SI-1709

ASBUILT SHOP DRAWING

JOB NO. 3304-DS CONTRACT NO. 41277

PREHEATER - UPPER PLATFORM & LADDER

FOR CITY OF HOUSTON

SCALE 1/4" = 1'-0" DATE 7-15-77
DRAWN BY L CHECKED BY
TRACED BY APPROVED 12/1/78

THIS DRAWING IS THE PROPERTY OF COMBUSTION ENGINEERING, INC.
AND IS NOT TO BE REPRODUCED, OR USED TO FURNISH ANY INFORMATION FOR MAKING OF DRAWINGS OR APPARATUS EXCEPT WHERE PROVIDED FOR BY AGREEMENT WITH SAID COMPANY.

DRAWING NO. D-SI-1764-1

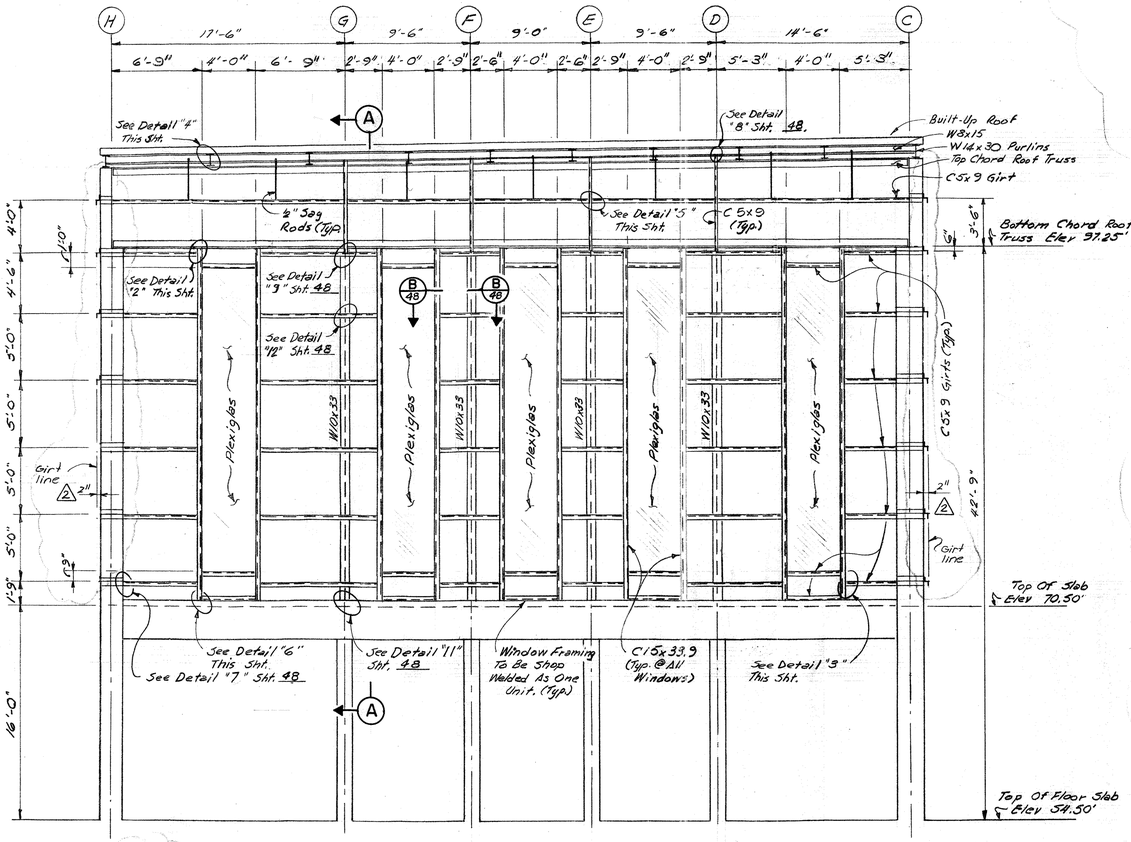

EAST ELEVATION (Column Line "7")

Scale: 3/16" = 1'-0"

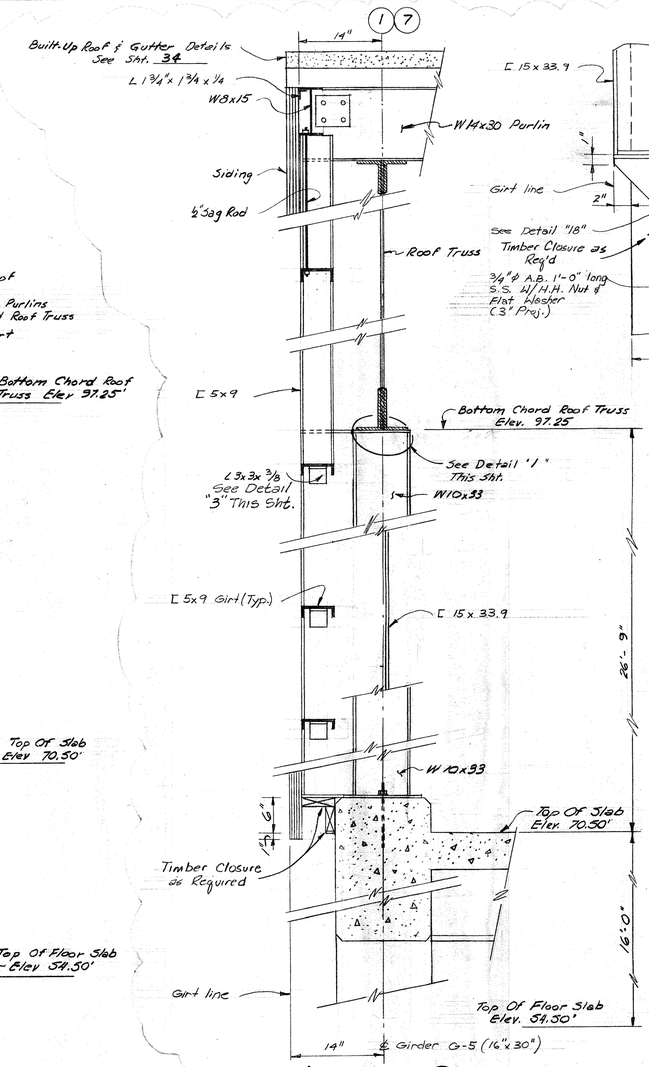

⚠2 SECTION (A)

Scale: 1" = 1'-0"

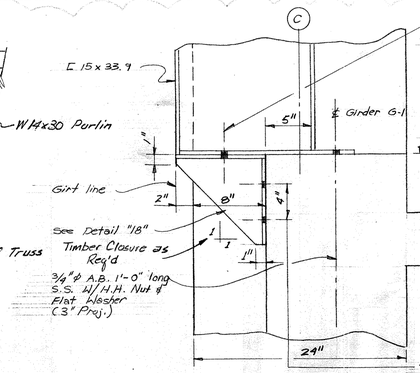

⚠2 DETAIL "17"

Scale: 1½" = 1'-0"

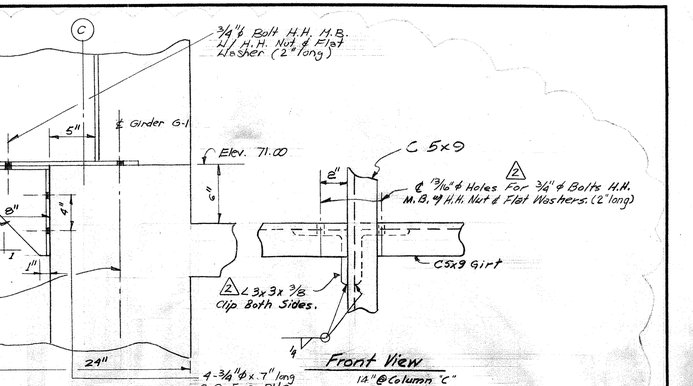

⚠2 DETAIL "5"

Scale: 3" = 1'-0"

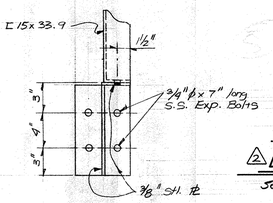

⚠2 DETAIL "18"

Scale: 1½" = 1'-0"

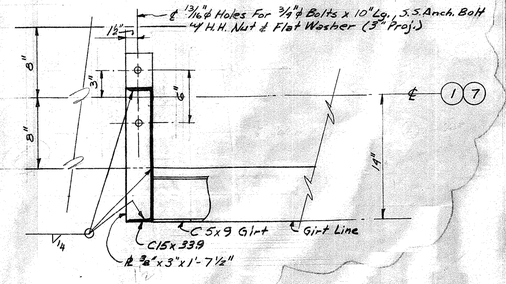

⚠2 DETAIL "6"

Scale: 1½" = 1'-0"

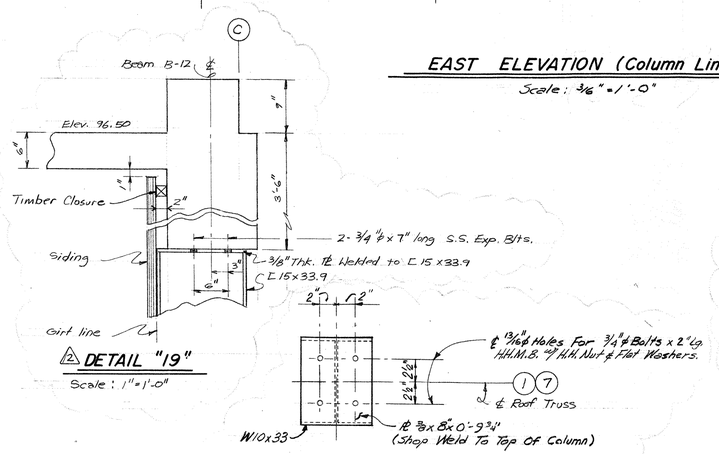

⚠2 DETAIL "19"

Scale: 1" = 1'-0"

⚠2 DETAIL "1"

Scale: 1½" = 1'-0"

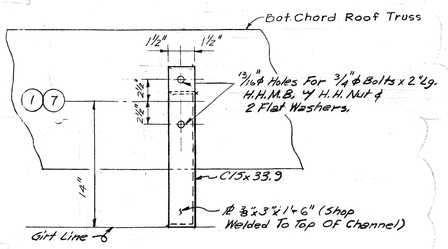

⚠2 DETAIL "2"

Scale: 1½" = 1'-0"

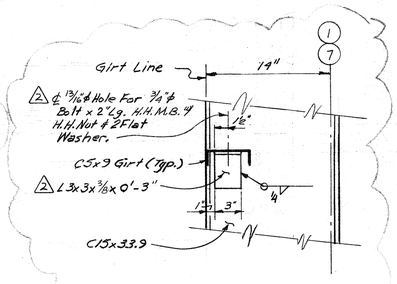

⚠2 DETAIL "3"

Scale: 1½" = 1'-0"

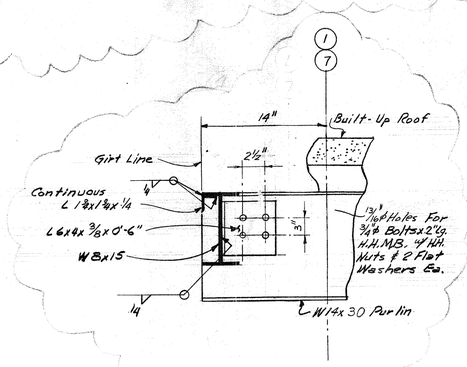

⚠2 DETAIL "4"

Scale: 1½" = 1'-0"

REV. NO.	DATE	DESCRIPTION	DESIGN	CHECKED
⚠2	11-78	Construction Revisions Rev. Girt Framing & Details Add Details "17" "18" & "19"	J.L.R.	H.J.K.
⚠1	3-77	General Modifications to Dimensions	J.C.S.	S.R.S.

STATE OF TEXAS — JAMES A. BINKLEY — 24282 — REGISTERED PROFESSIONAL ENGINEER

STATE OF TEXAS — PAUL R. HOLMES — 27638 — REGISTERED PROFESSIONAL ENGINEER

CITY OF HOUSTON
DEPARTMENT OF PUBLIC WORKS

ALMEDA SIMS SLUDGE DISPOSAL PLANT — 1973

FILTER ROOM
EAST WALL
FRAMING & DETAILS

RECOMMENDED FOR APPROVAL:
BINKLEY & HOLMES, INC., CONSULTING ENGINEERS

APPROVED:
CHIEF ENGINEER — ASST. CHIEF ENGINEER
ASST. DIRECTORS OF PUBLIC WORKS
DIRECTOR OF PUBLIC WORKS

DESIGNED BY: Y. Jafri
DRAWN BY: C.A. MARRILLIER
CHECKED BY: M.D.J. & S.E.S.
SCALE: As Shown
DATE: Dec., 1973
SHEET 49 OF 200 SHEETS
DRAWING NO. 10845

D-M-1929 | REVISION

END COVER M-1617A
HINGED COVER M-1617C
COVER SUPPORT M-1617D
HINGED COVER M-1617B
INLET COVER M-1330B
4-9/16" DIA. HOLES
DRIVEN SHAFT M-1751B
4-1¼" DIA. HOLES
10" 10"
WESTINGHOUSE 40 HP-125 RPM, FRAME 324TB75D. GEARMOTOR, WITH SLIDE RAILS. TEFC, 230/460-3-60 ASSEM. F-2
SLIDE RAILS
INSPECTION COVER M-1618
NAME PLATE MP-11283
(4) #4 MET. DR. SCREW x 3/16" LG. - TYPE U
(5) 5/8" HEX. BOLT x 1½" LG. w/HN & LW
(6) 5/8" HEX. BOLT x 2" LG. w/HN, LW & BEVEL WASHER
(2) 5/8" HEX. BOLT x 2" LG. w/HN, LW & BEVEL WASHER
INSP. COVER M-1618
(5) 5/8" HEX. BOLT x 1½" LG. w/HN & LW
DRIVE SHAFT M-1751A
KEY MP-8919A5
160-2, 2" PITCH DOUBLE ROLLER CHAIN DRIVE.
15 TOOTH, TYPE B MOTOR SPROCKET, 3 5/8" BORE - 7/8 x 7/16" KW & SS
46 TOOTH, TYPE C MIXER SPROCKET, 4⅛" BORE - 1" x ½" KW & SS
CHAIN LENGTH = 68 PITCHES (11'-4" LG.)
MIXER = 41 RPM.
(10) 5/8" HEX. BOLT x 2" LG. w/HN, LW & BEVEL WASHER
ASSEMBLY M-1929A
S/N 77031
11'-1¼"
15 5/8" ℄ DRIVE
℄ GUARD
15¾"
11½"
3"
COVERS
M-1617 AA
M-1617 C
M-1617 D
M-1330A
M-1617 BB
11'-1¼"
15¾"
3" 3"
CHAIN GUARD M-1760B
GUARD BASE M-1760C
DRIVE SHAFT M-1751A
19¾"
19¾"
2'-5 5/16"
2'-3"
BODY M-1774B
3-1 3/16"
13¾" 18¾"
4-9/16" DIA. HOLES
4-1¼" DIA. HOLES
10" 10"
40 HP MOTOR ASSEM. F-1
15½"
10'-0"
4-3½"
1" PIPE CONNECTION FOR MAKE-UP WATER MANIFOLD. MANIFOLD TO BE FABRICATED & INSTALLED IN FIELD BY C.E. INC., AS REQ'D. (8) ½" 14HSS40 NOZZLES
(8) CLAMP ASSEM. B-M-6710
LINER M-1613
END PLATE M-1612
FLOATING BRG. ASSEM. C-M-1422JA
ASSEMBLY M-1929B
SAME AS M-1929A EXCEPT AS NOTED
S/N 77030
(KICKER M-1615B (NEAR SHAFT)
(KICKER M-1615A (FAR SHAFT)
BOLT M-1621 1" LOCKWASHER
SADDLE M-932
PADDLE M-1663
TIP - M-687
PADDLE ASSEM. A-S-855
T/STL.
2½"
½" SHIM
THERMOCOUPLE ASSEM. B-M-1776
(NS) M-1929A
(FS) M-1929B
BODY M-1774A
LINER ASSEM. C-M-1805
10'-0"
13 3/8"
18 5/16"
10" 10"
4'-3½"
15½"
3½" 2½"
2½" 3½"
4-7/8" DIA. HOLES
19¾"
19¾"
4'-2 15/16"
LINER M-1754
END PLATE M-1752
THRUST BRG. ASSEM. C-M-1423JAX
20 11/16"
36.146" CTRS.
CHAIN GUARD M-1760A
(4) ½" HEX. BOLT x 1¼" LG. w/HN
CHAIN GUARD BASE M-1760C
19 3/16"
22"
9 11/32" 9 11/32"
℄ MTR.
2'-2 5/16"
2'-5 3/16"
3'-1 3/16"
℄ MIXER
1'-0"

CITY OF HOUSTON
DEPT. OF PUBLIC WORKS — WASTEWATER DIVISION
REVIEWED FOR GENERAL CONFORMANCE WITH DESIGN CONCEPT OF PROJECT AND GENERAL COMPLIANCE WITH THE CONTRACT DRAWINGS SPECIFICATIONS, AND DOCUMENTS.
☑ NO EXCEPTION
☐ EXCEPTIONS AS NOTED
☐ REJECTED - REVISE AND RESUBMIT
Review of shop drawings shall in no way relieve the contractor of responsibility for deviation from requirements of contract documents, nor for errors or omissions in shop drawings. Contractor is responsible for confirming and correlating dimensions at job site, for information which pertains to fabrication processes or construction techniques, for fit of parts when assembled, and for coordination of work of all trades. This review does not supersede or overrule laboratory analysis or test reports.
BY: DM
DATE: 12-4-78

BINKLEY & HOLMES, INC. Consulting Engineers
☑ NO EXCEPTIONS NOTED
☐ EXCEPTIONS NOTED
REVISE AND RESUBMIT FOR DISTRIBUTION
☐ RETURNED FOR CORRECTION
Review does not relieve contractor of responsibility for conformity with contract requirements, correct details and fit of parts when assembled.
BINKLEY & HOLMES, INC. BY: DATE 6/6/78
CITY OF HOUSTON BY: DATE 12-4-78

W. W. RECORDS MICROFILM D-M-1750 DATE 12-6-78

ASBUILT SHOP DRAWING

JOB NO. 3304-DS
RAYMOND DIVISION, CHICAGO, ILL. CONTR. NO. 41277

1 24" D.F. MIXER ASSEM.
FOR CITY OF HOUSTON, TEXAS
SCALE 3" = 1'-0" DRAWN BY L TRACED BY
DATE 6-7-77 CHECKED BY DM APPROVED HHV 6-8-77

THIS DRAWING IS THE PROPERTY OF COMBUSTION ENGINEERING, INC. AND IS NOT TO BE REPRODUCED, OR USED TO FURNISH ANY INFORMATION FOR MAKING OR DRAWINGS FOR APPARATUS EXCEPT WHERE PROVIDED FOR BY AGREEMENT WITH SAID COMPANY.

DRAWING NO. D-M-1929-O
DWG. NO. 18045 (SHT. NO. 49 OF)

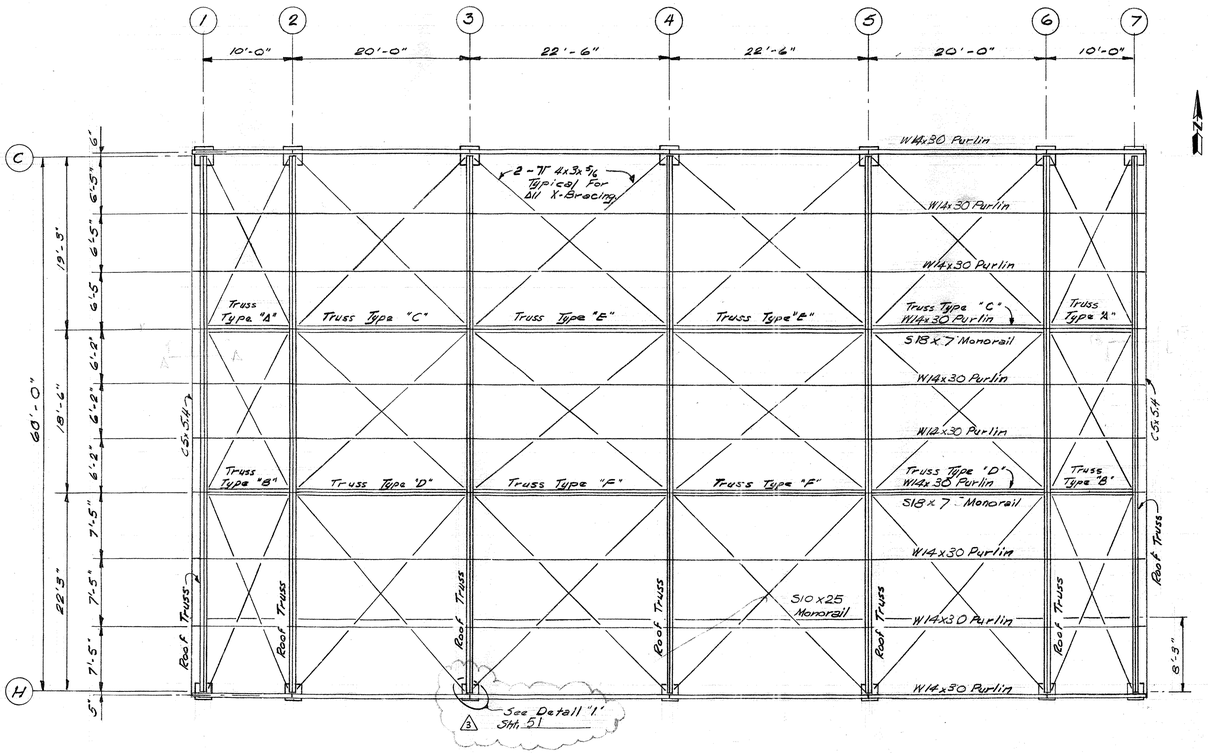

FILTER ROOM ROOF FRAMING PLAN

Scale: 3/8" = 1'-0"

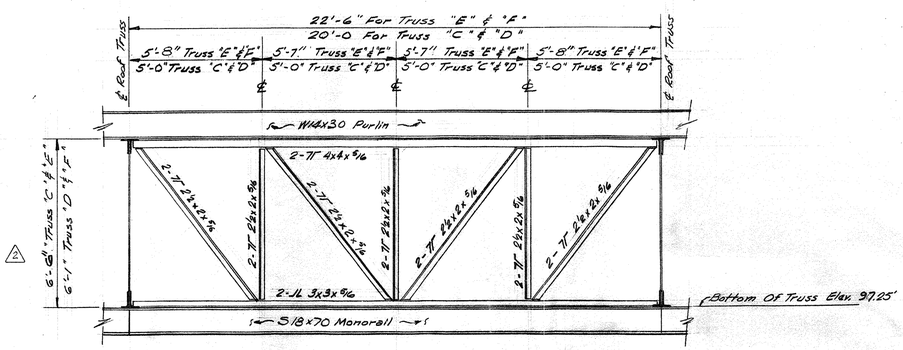

BRACING TRUSSES "C", "D", "E" & "F"

Scale: 3/8" = 1'-0"

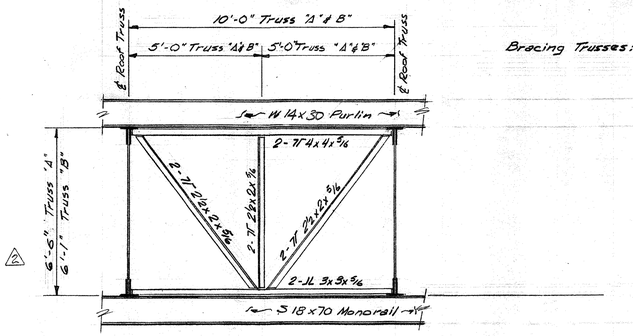

BRACING TRUSSES "A" & "B"

Scale: 3/8" = 1'-0"

Bracing Trusses: 2 Req'd. Each Type.

Notes;
1. All Steel To Be Hot-Dipped Galv. After Fabrication.
2. On All Truss Members Using Angles Of Unequal Legs, The Short Leg Is Outstanding.
3. All "X-Bracing Same At Top & Bottom Cords.
4. Monorails Run From Column Line "1" To Column Line "7".

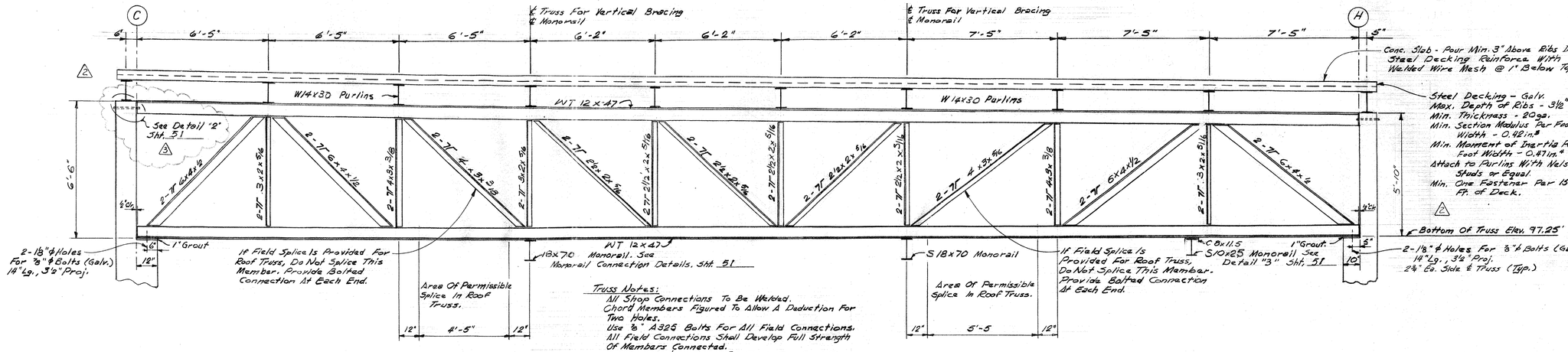

Truss Notes:
All Shop Connections To Be Welded.
Chord Members Figured To Allow A Deduction For Two Holes.
Use ⅞" A325 Bolts For All Field Connections.
All Field Connections Shall Develop Full Strength Of Members Connected.
All Gusset PL's To Be ⅜" Thick For Roof Truss & ⅝" For Bracing Trusses.

ROOF TRUSS (7 req'd.)

Scale: 3/8" = 1'-0"

REV. NO.	DATE	DESCRIPTION	DESIGN	CHECKED
3	11-78	Construction Revisions Change Detail 1 & Detail 2 Reference To Sht 51	H.J.K.	K.R.L.
2	6-77	Rev. Dimension	J.C.S	K.R.L
1	3-77	General Modifications to Dimensions	J.C.S.	S.R.S.

JAMES A. BINKLEY — STATE OF TEXAS — 24252 — REGISTERED PROFESSIONAL ENGINEER

PAUL R. HOLMES — STATE OF TEXAS — 27638 — REGISTERED PROFESSIONAL ENGINEER

CITY OF HOUSTON
DEPARTMENT OF PUBLIC WORKS

ALMEDA SIMS SLUDGE DISPOSAL PLANT — 1973

FILTER ROOM

ROOF FRAMING PLAN AND TRUSS ELEVATIONS

RECOMMENDED FOR APPROVAL:
BINKLEY & HOLMES, INC., CONSULTING ENGINEERS

APPROVED:
Walter Williams
CHIEF ENGINEER
ASST. CHIEF ENGINEER
ASST. DIRECTORS OF PUBLIC WORKS
DIRECTOR OF PUBLIC WORKS

DESIGNED BY: V. Jafri
DRAWN BY: C.A. MARRULLIER
CHECKED BY: M. M. J. & S.P.S.
SCALE: As Shown
DATE: Dec., 1973
SHEET 50 OF 200 SHEETS
DRAWING NO. 108345

D-D1-11528

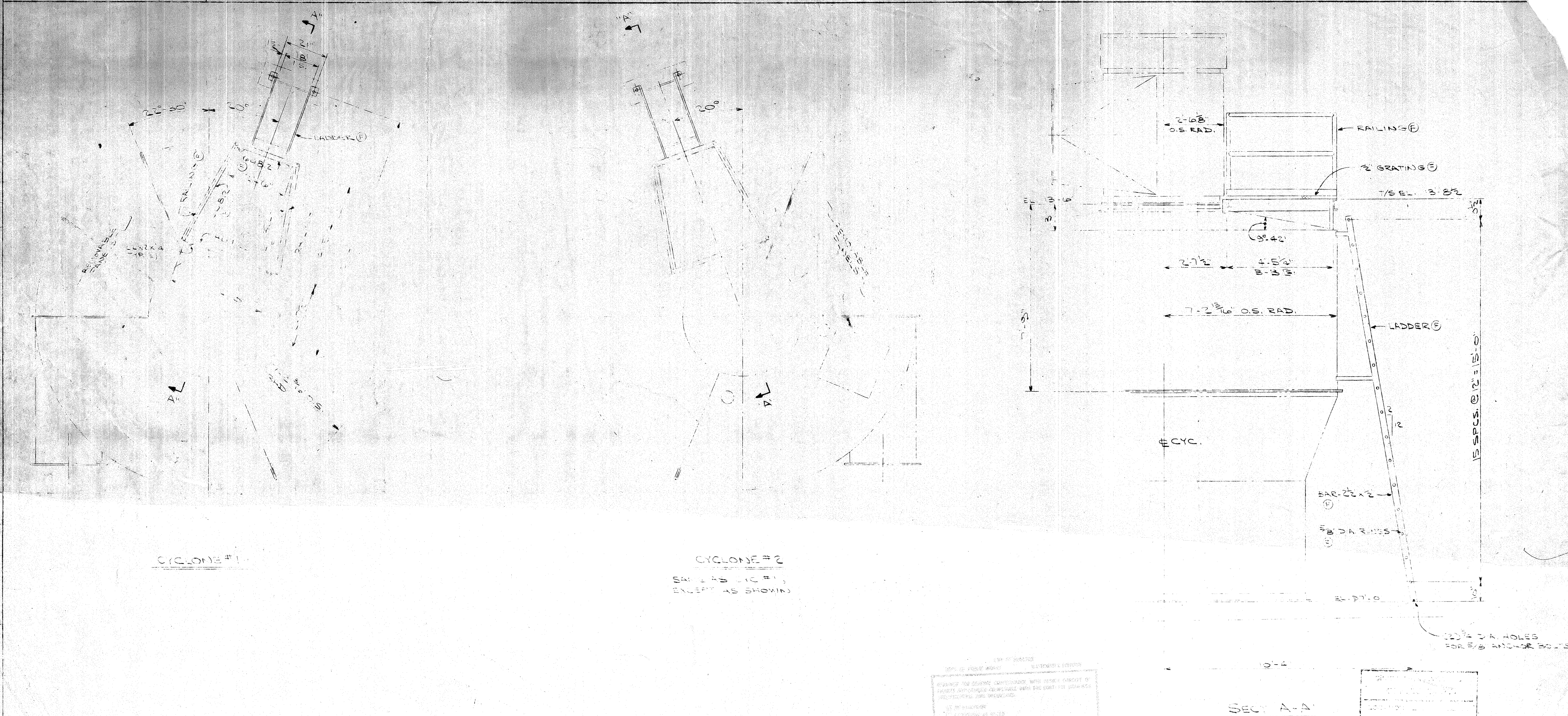

NOTES:

GRATING, SUPPORT STL., RAILINGS & LADDER MARKED (F) ARE BY CE & INSTALLED IN FIELD BY CE.

GRATING, RAILINGS & LADDER ARE TO BE HOT-DIP GALV. AFTER FABRICATION.

SUPPORT STL. IS TO BE PAINTED.

ASBUILT SHOP DRAWING

C-D1-11387

CYCLONE - PLATFORM & LADDER

FOR CITY OF HOUSTON

SCALE 1/2" = 1'-0

DRAWN BY

TRACED BY

CHECKED BY

APPROVED

THIS DRAWING IS THE PROPERTY OF COMBUSTION ENGINEERING, INC. AND IS NOT TO BE REPRODUCED, OR USED TO FURNISH ANY INFORMATION FOR MAKING OF DRAWINGS OR APPARATUS EXCEPT WHERE PROVIDED FOR BY AGREEMENT WITH SAID COMPANY.

DRAWING NO. D-D1-11528-0

DWG. NO. 18045

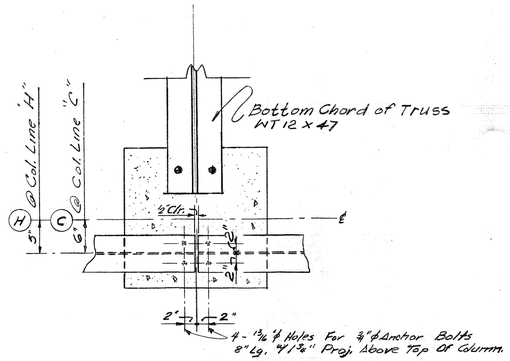

DETAIL "1"

Scale: 1"=1'-0"

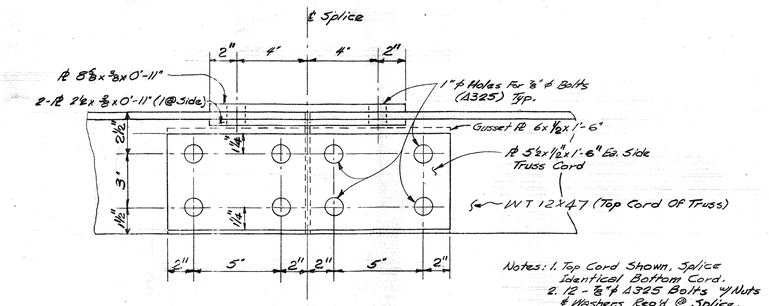

SIDE VIEW

Notes: 1. Top Cord Shown, Splice Identical Bottom Cord.
2. 12 - 7/8" ϕ A325 Bolts 4 Nuts & Washers Req'd @ Splice.

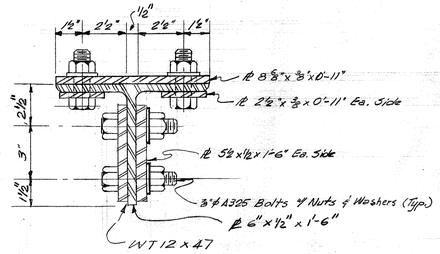

SECTION

NTS

ROOF TRUSS SPLICE DETAIL

Scale: 3"=1'-0"

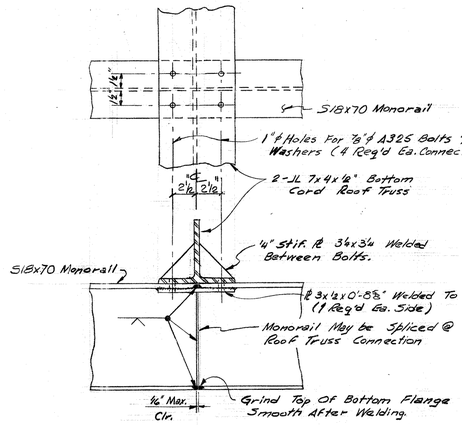

ROOF TRUSS CONNECTION

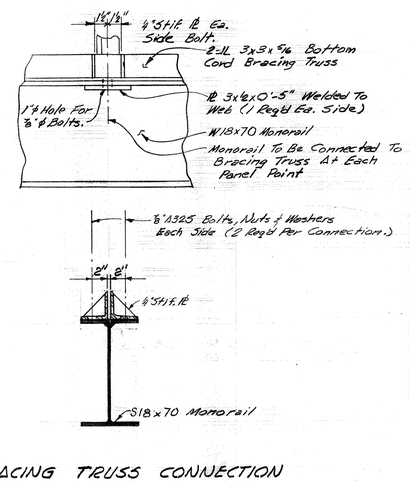

BRACING TRUSS CONNECTION

MONORAIL CONNECTION DETAILS

Scale: 1 1/2"=1'-0"

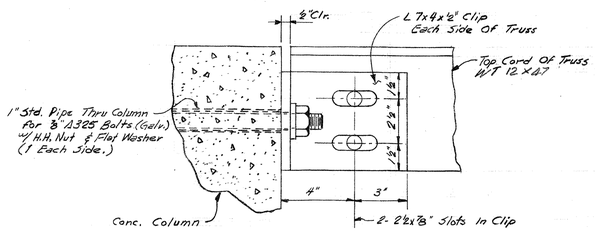

SIDE VIEW

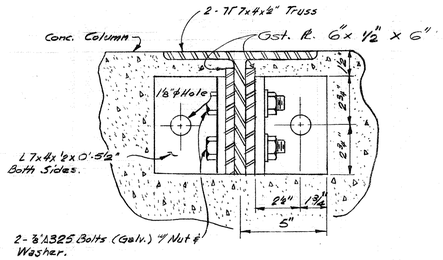

SECTION

NTS

DETAIL "2"

Scale: 3"=1'-0"

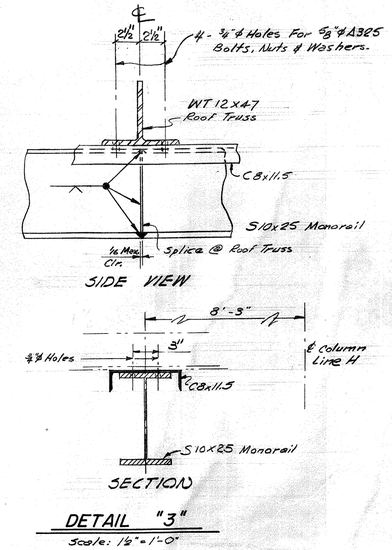

SIDE VIEW

SECTION

DETAIL "3"

Scale: 1 1/2"=1'-0"

STATE OF TEXAS — JAMES A. BINKLEY — 24282 — REGISTERED PROFESSIONAL ENGINEER

STATE OF TEXAS — PAUL L. HOLMES — 27638 — REGISTERED PROFESSIONAL ENGINEER

REV. No.	DATE	DESCRIPTION		
1	3-77	General Modifications to Dimensions	J.C.S.	S.R.S.

CITY OF HOUSTON
DEPARTMENT OF PUBLIC WORKS

ALMEDA SIMS SLUDGE DISPOSAL PLANT — 1973

FILTER ROOM

MISCELLANEOUS ROOF FRAMING DETAILS

RECOMMENDED FOR APPROVAL:
BINKLEY & HOLMES, INC., CONSULTING ENGINEERS

APPROVED:
Walter Williams — CHIEF ENGINEER
ASST. CHIEF ENGINEER
ASST. DIRECTORS OF PUBLIC WORKS
DIRECTOR OF PUBLIC WORKS

DESIGNED BY: V. JAFRI
DRAWN BY: C.A. MARRULLIER
CHECKED BY: M. B. J. & S.R.S.
SCALE: As Shown
DATE: Dec. 2 1973
SHEET 51 OF 200 SHEETS
DRAWING NO. 18045

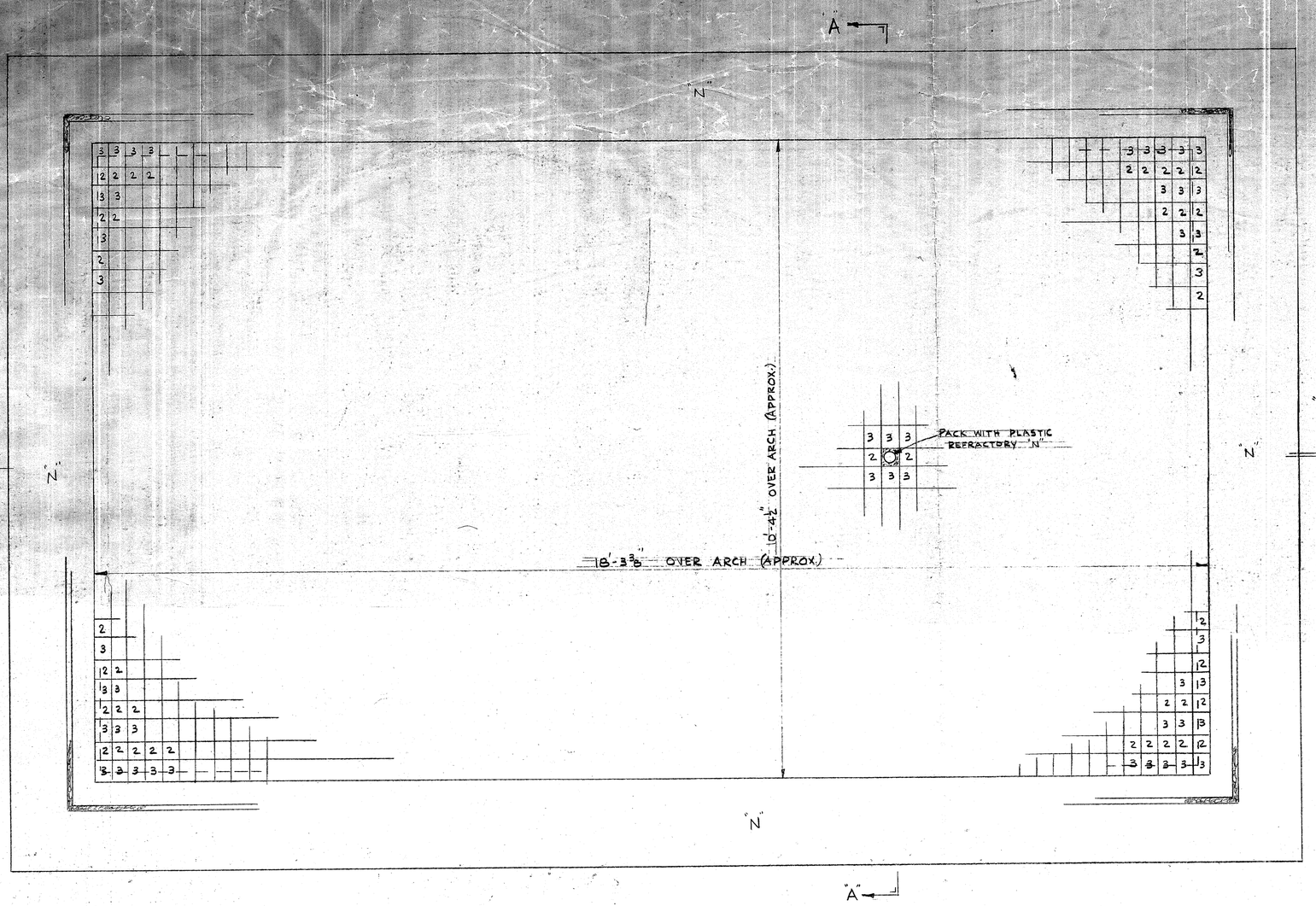

PLAN VIEW

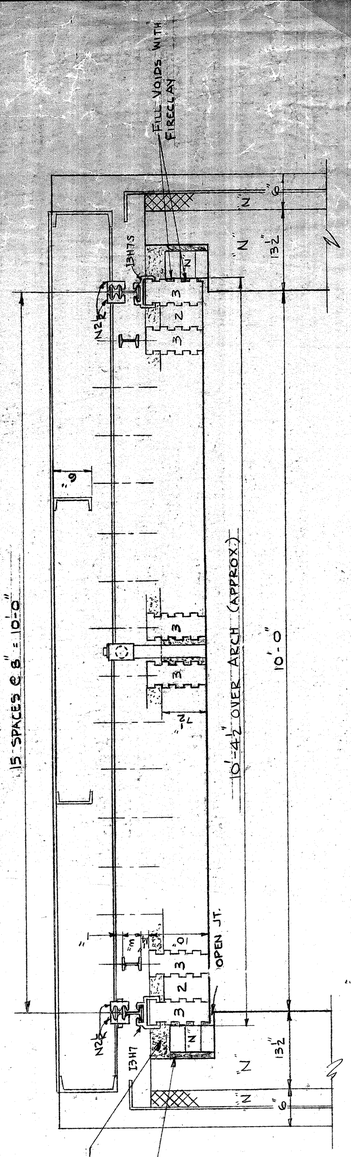

SECTION A-A

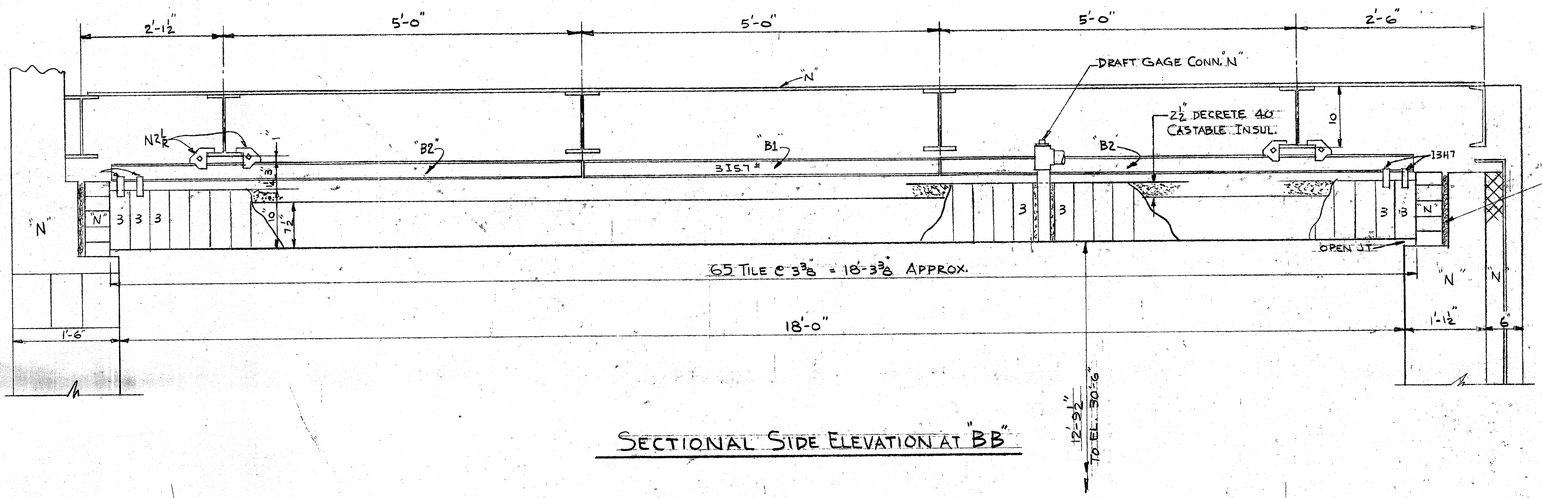

SECTIONAL SIDE ELEVATION AT "BB"

NOTES:
1- ALL STEEL IS "N" EXCEPT 3 1/8 CS.7#
2- ALL TILE TO BE LAID IN FIRECLAY.

LIST OF MATERIAL REQ'D FOR ONE(1) INSTALLATION

TILE (1ST QUAL.)					CASTINGS			
SYM.	EXACT AMT.	SPARES	TOTAL	NAME	EXACT AMT.	SPARES	TOTAL	NAME
2	374	1		MSA2	1040		10	13H7
3	1040	20	1060	MSA3	128	3	131	N2L
					128	3	131	N2R
1000# FIRECLAY								
1000# DECRETE 40					PLAIN MATERIAL			
					16	3 1/8 CS.7" x 9-11¾" - B1		
					32	3 1/8 CS.7" x 6-7½" - B2		

FOR M. H. DETRICK CO.
REPAIR PARTS 2284 W. HOLCOMBE BLVD.
CONTACT SUITE 206, HOUSTON, TEXAS 770
YOUR DETRICK REPRESENTATIVE WILL GIVE FAST & EFFICIENT REPAIR ORDER SERVICE OR ASSISTANCE WITH YOUR MAINTENANCE PROBLEMS.

CERTIFIED FOR CONSTRUCTION
M. H. DETRICK CO.

THIS DRAWING IS THE PROPERTY OF THE M. H. DETRICK CO. AND IS LOANED UPON CONDITION THAT IT IS NOT TO BE COPIED OR REPRODUCED, IN WHOLE OR IN PART, OR USED FOR FURNISHING INFORMATION TO OTHERS, OR FOR ANY OTHER PURPOSE DETRIMENTAL TO THE INTERESTS OF THE M. H. DETRICK CO. AND IS TO BE RETURNED UPON REQUEST.

ORIGINAL CONSTRUCTIONS SHOWN ON THIS DRAWING ARE PROTECTED BY PATENTS AND/OR PATENT APPLICATIONS OF M. H. DETRICK CO.

THIS DRAWING IS BASED ON INFORMATION DERIVED FROM: OUR DRWG NO.

MATERIAL MARKED "N" IS NOT FURNISHED BY THE M. H. DETRICK CO.

M. H. DETRICK CO. CHICAGO, ILL.

JOB NO.	DATE	NO. INST'S.

DETRICK CONSTRUCTIONS APPLIED TO

FLASH DRYERS FURNACE ROOF

FOR

CITY OF HOUSTON
HOUSTON, TEXAS

DRAWN BY		DATE	SCALE 1" = 1'-0"
TRACED BY		DATE	No
CHECKED BY		DATE	

REVISIONS:-

DWG NO 180453 SHT # 1 OF 1

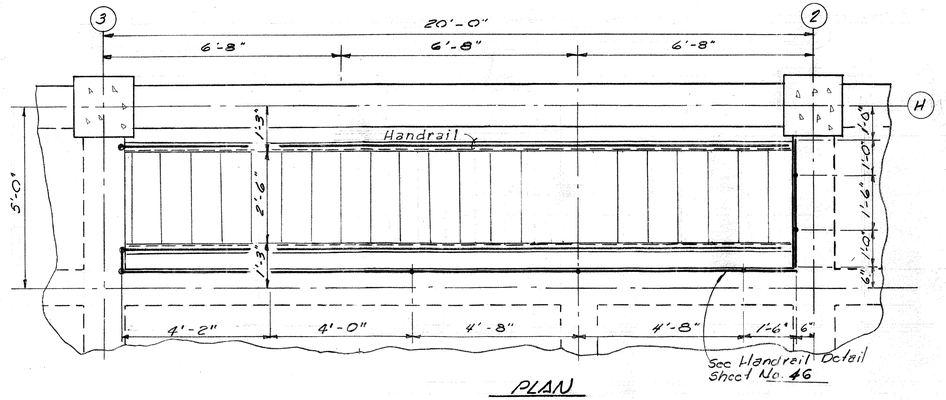

PLAN

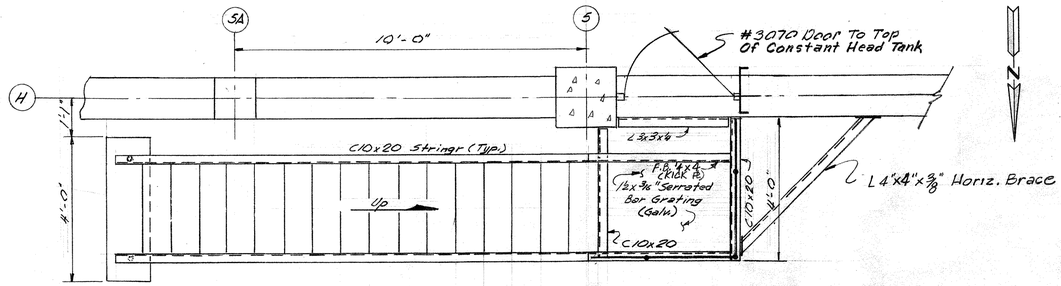

PLAN

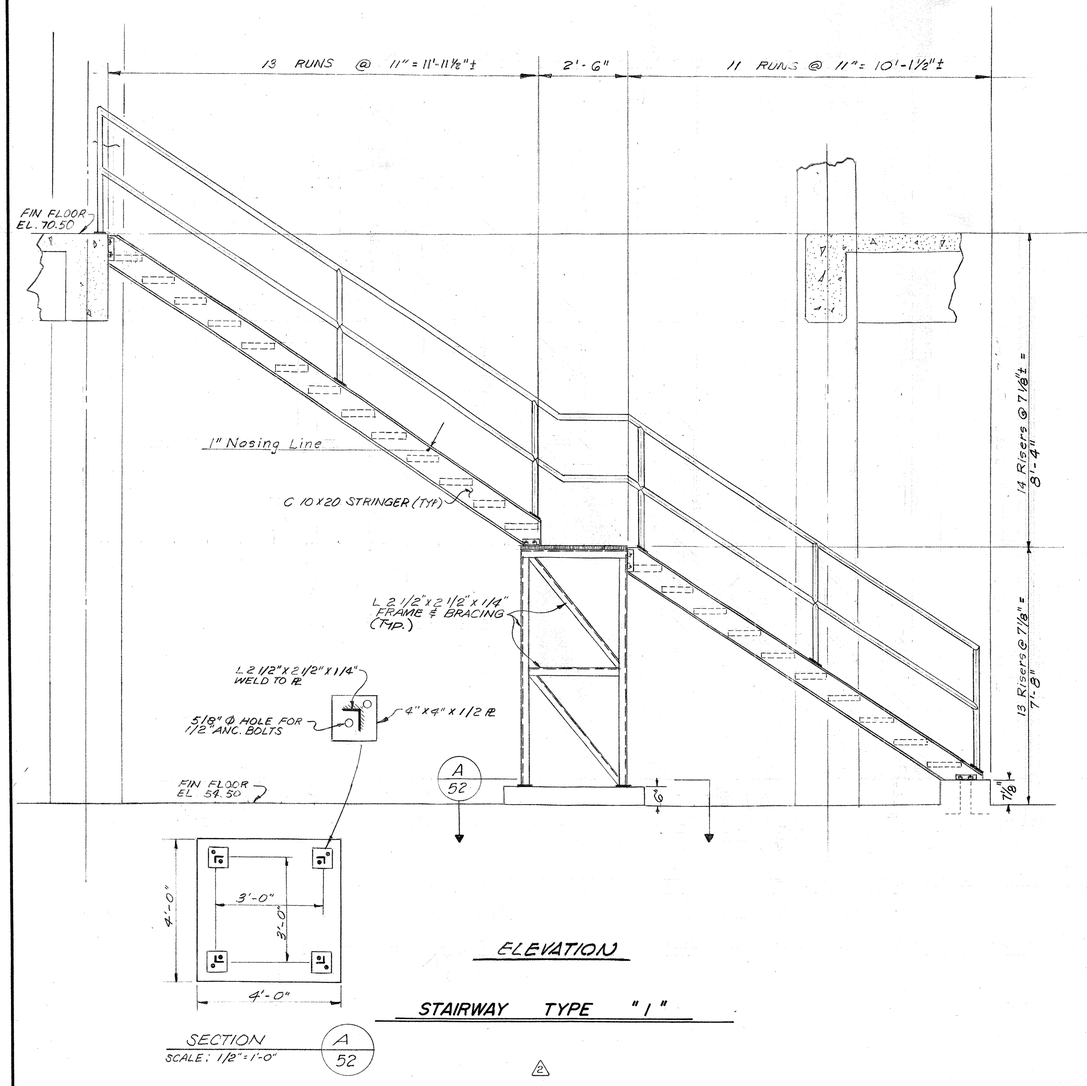

ELEVATION

STAIRWAY TYPE "1"

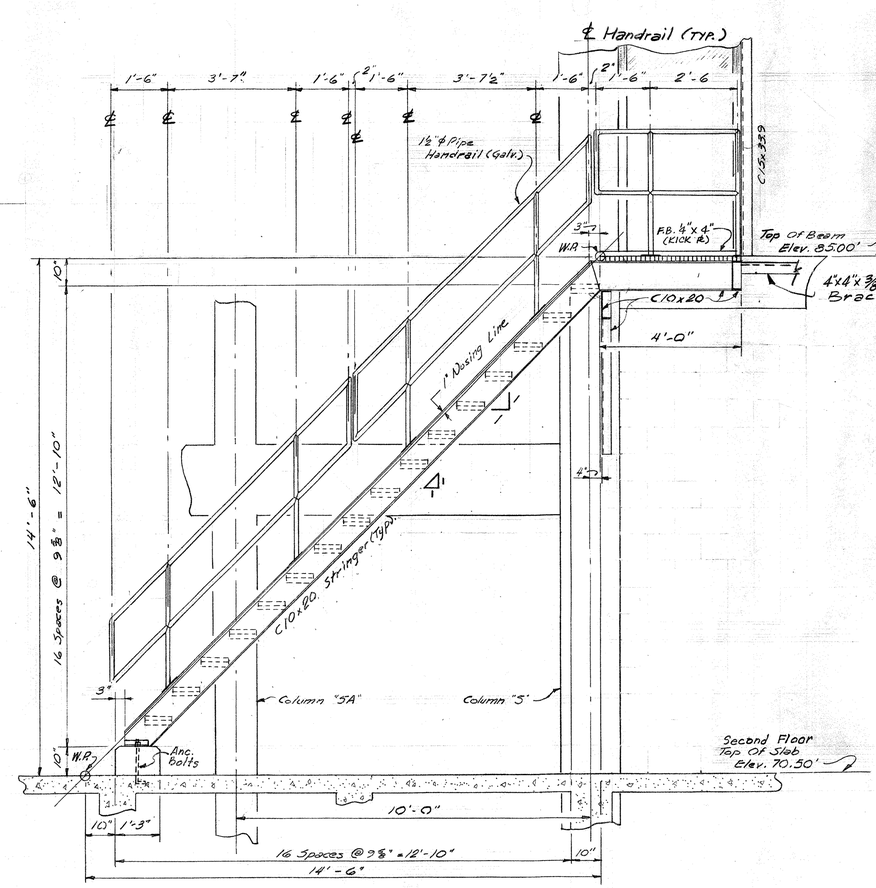

ELEVATION

STAIRWAY TYPE "2"

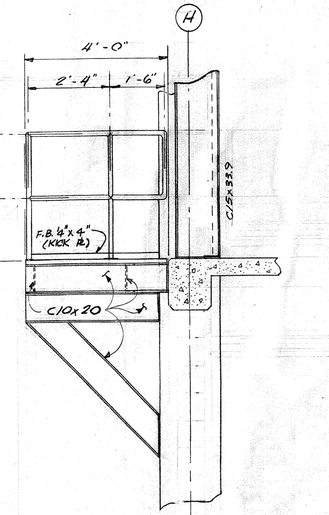

SIDE ELEVATION

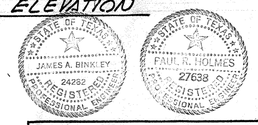

CITY OF HOUSTON
DEPARTMENT OF PUBLIC WORKS

ALMEDA SIMS
SLUDGE DISPOSAL
PLANT – 1973

FILTER ROOM
STAIR DETAILS
TYPES "1" & "2"

RECOMMENDED FOR APPROVAL:
BINKLEY & HOLMES, INC., CONSULTING ENGINEERS

APPROVED:
CHIEF ENGINEER — ASST. CHIEF ENGINEER
ASST. DIRECTORS OF PUBLIC WORKS
DIRECTOR OF PUBLIC WORKS

DESIGNED BY: K Jafri
DRAWN BY: C.A. MARRILLIER
CHECKED BY: M. D. J. & S.R.S.
SCALE: 4" = 1'-0"
DATE: Dec. 1973
SHEET 52 OF 200 SHEETS
DRAWING NO. 18045

REV. No.	DATE	DESCRIPTION	DESIGN	CHECKED
2	6-77	Rev. Stairway No 1	J.C.S.	K.R.L.
1	3-77	General Modifications	J.C.S.	S.R.S.

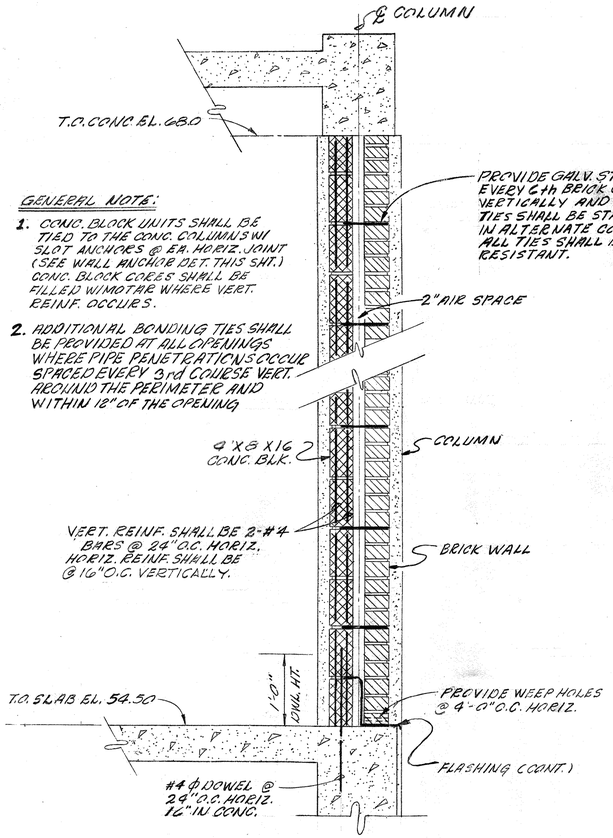

TYPICAL SECTION THRU FILTER ROOM

SCALE: 1"=1'-0"

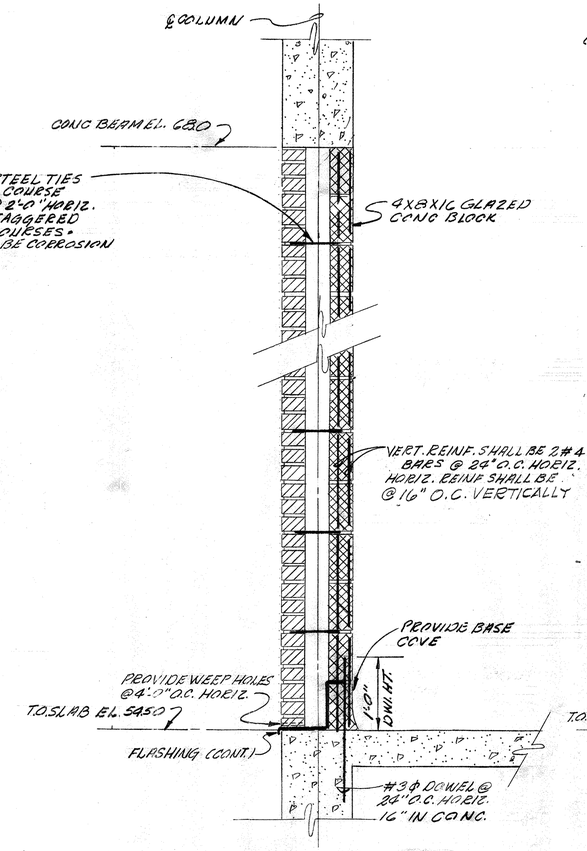

TYPICAL SECTION THRU CHEMICAL ROOM POLYMER ROOM AND RESTROOM EXTERIOR WALLS

SCALE: 1"=1'-0"

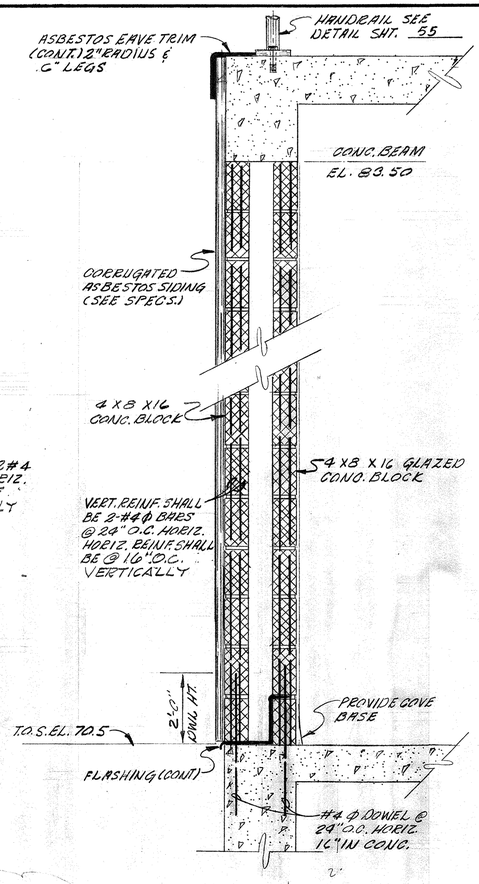

TYPICAL SECTION THRU LUNCH ROOM EXTERIOR WALL

SCALE: 1"=1'-0"

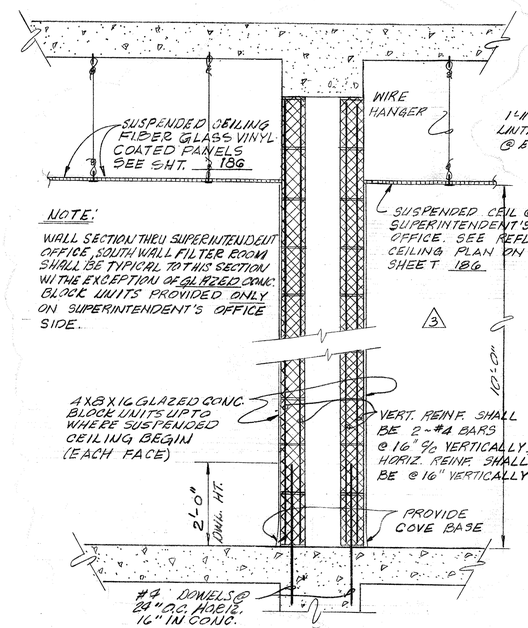

TYPICAL SECTION THRU REST ROOM LUNCH ROOM & SUPERINTENDENTS OFFICE

SCALE: 1"=1'-0"

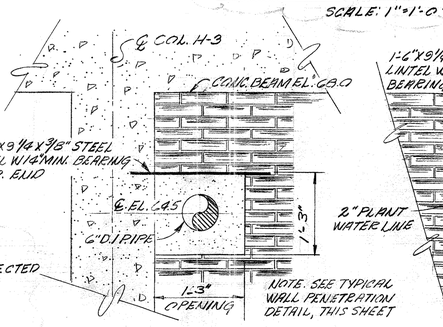

WALL OPENING "A"

N.T.S.

SEE SHT. 32

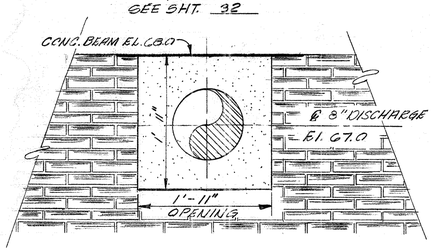

WALL OPENING "C"

N.T.S.

SEE SHT. 67

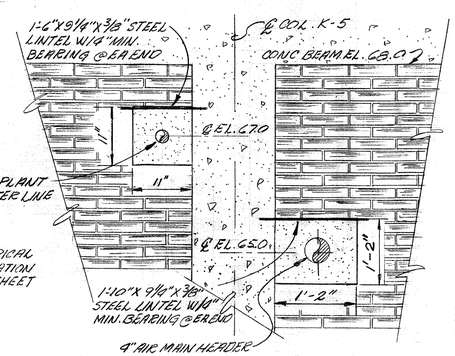

WALL OPENING "B"

N.T.S.

SEE SHT. 67

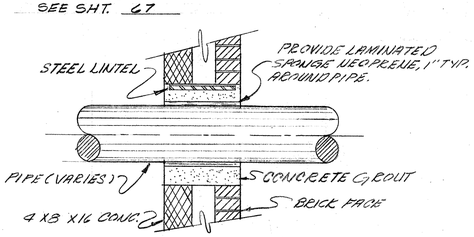

TYPICAL WALL PENETRATION DETAIL

N.T.S.

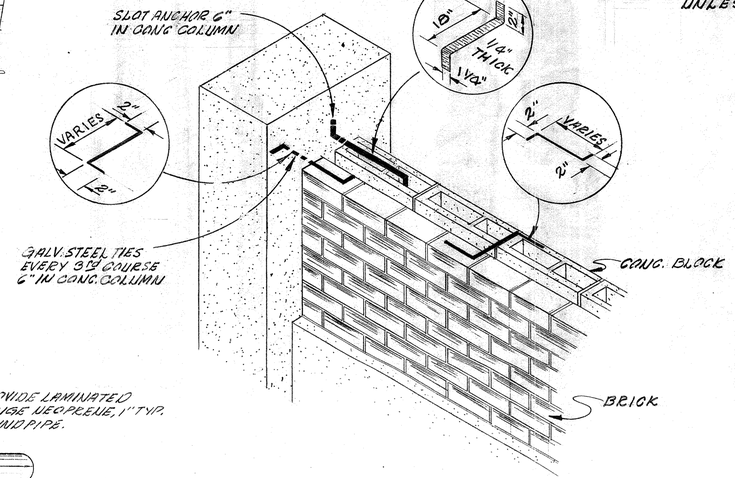

TYPICAL WALL ANCHOR DETAIL

N.T.S.

NOTE:

WHERE MASONY OPENINGS OCCUR, PROVIDE STANDARD CONC. BLOCK LINTEL W/ 2-#3 ϕ BARS. ALLOW MIN. 6" BEARING EA. END. UNLESS OTHERWISE NOTED.

STATE OF TEXAS — JAMES A. BINKLEY — 24282 — REGISTERED PROFESSIONAL ENGINEER

STATE OF TEXAS — PAUL R. HOLMES — 27638 — REGISTERED PROFESSIONAL ENGINEER

REV. NO:	DATE	DESCRIPTION	DESIGN	CHECKED
3	10-79	Construction Revisions Modify Block Walls	D.D.C.	H.J.K.
2	6-77	General Modifications	J.C.S.	K.R.L.
1	3-77	General Modifications	J.C.S.	S.R.S.

CITY OF HOUSTON
DEPARTMENT OF PUBLIC WORKS

ALMEDA SIMS SLUDGE DISPOSAL PLANT - 1973

FILTER ROOM ARCHITECTURAL SECTIONS & DETAILS

RECOMMENDED FOR APPROVAL:
BINKLEY & HOLMES, INC., CONSULTING ENGINEERS

APPROVED:
CHIEF ENGINEER — ASST. CHIEF ENGINEER
ASST. DIRECTORS OF PUBLIC WORKS
DIRECTOR OF PUBLIC WORKS

DESIGNED BY: R. ESPINOZA
DRAWN BY: I. GONZALEZ
CHECKED BY: M.P.J. & S.R.S.
SCALE:
DATE: Dec., 1973
SHEET 53 OF 200 SHEETS
DRAWING NO. 18045

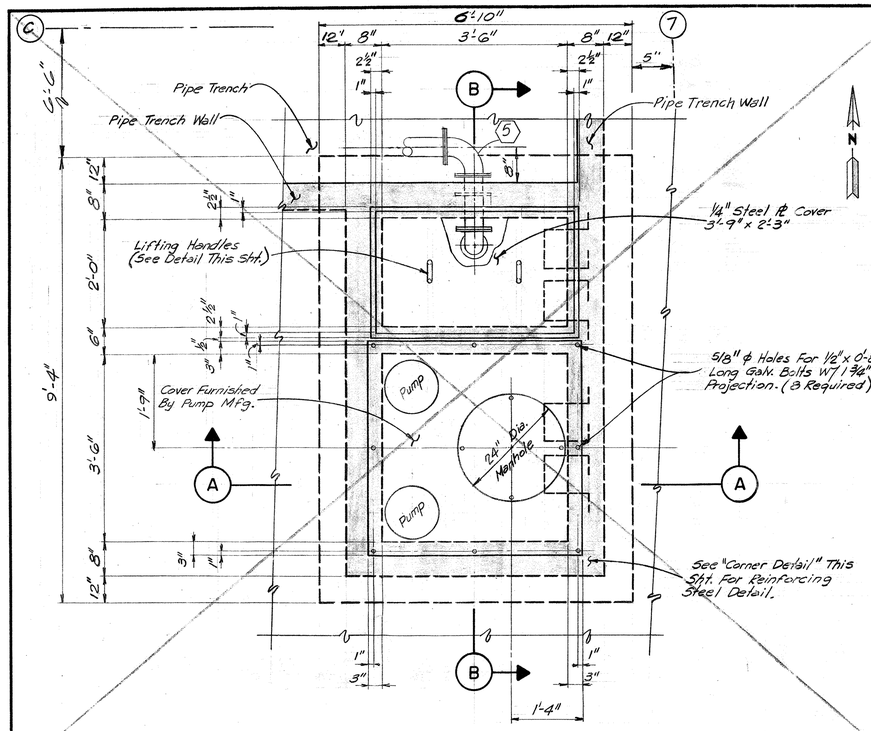

FOR PIPING DETAIL SEE SHT. 174

PLAN – SEAL WATER RECIRCULATION PIT

Scale: 3/4" = 1'-0"

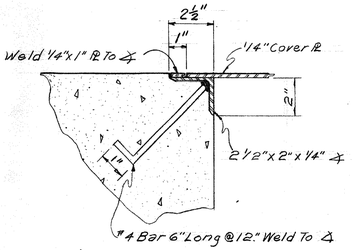

DETAIL "1"

Scale: 3" = 1'-0"

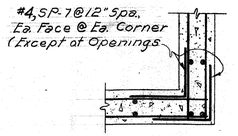

CORNER DETAIL

Scale: 3/4" = 1'-0"

Reinforcing Steel Schedule
Seal Water Recirculation Pit

Mark	Type	Size	No Req'd	Length Per Bar	Bent Bar Dim. 'A'	Bent Bar Dim. 'B'
SP-1	Str.	#4	18	6'-6"		
SP-2	1	#4	50	3'-8½"	2'-3"	1'-6"
SP-3	Str.	#4	40	4'-6"		
SP-4	Str.	#4	50	7'-7"		
SP-5	Str.	#4	12	9'-0"		
SP-6	Str.	#4	32	7'-0"		
SP-7	1	#4	80	4'-0"	2'-0"	2'-0"

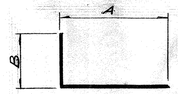

TYPE "1" BENT BAR DETAIL

See Schedule For Dimensions

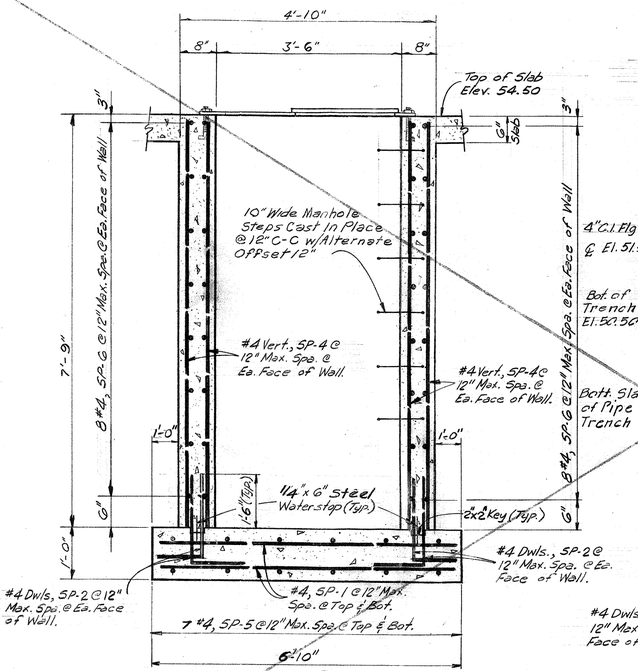

SECTION (A)

Scale: 3/4" = 1'-0"

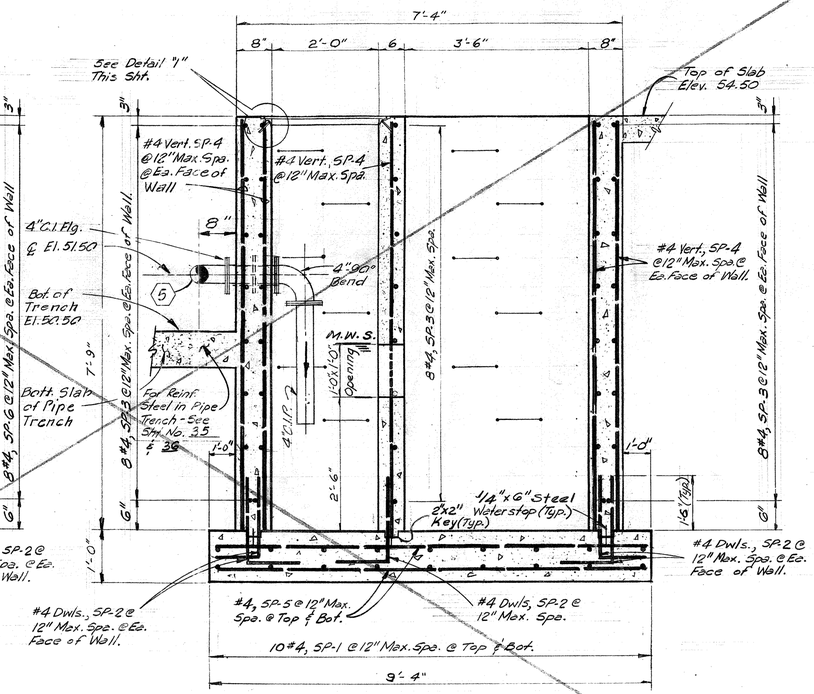

SECTION (B)

Scale: 3/4" = 1'-0"

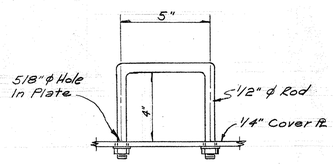

LIFTING HANDLE IN UP POSITION

Scale: 3" = 1'-0"

REV. NO.	DATE	DESCRIPTION	DESIGN	CHECKED
2	11-77	Addendum Revision Delete Recirculation Pit	H.J.K.	H.J.K.
1	8-77	General Modifications to Dimensions	J.C.S	S.E.S.

JAMES A. BINKLEY — 24282 — REGISTERED PROFESSIONAL ENGINEER — STATE OF TEXAS

PAUL R. HOLMES — 27638 — REGISTERED PROFESSIONAL ENGINEER — STATE OF TEXAS

CITY OF HOUSTON
DEPARTMENT OF PUBLIC WORKS

ALMEDA SIMS SLUDGE DISPOSAL PLANT – 1973

FILTER ROOM – SEAL WATER RECIRCULATION PIT

RECOMMENDED FOR APPROVAL:
BINKLEY & HOLMES, INC., CONSULTING ENGINEERS

APPROVED:
Walter Williams
CHIEF ENGINEER — ASST. CHIEF ENGINEER
ASST. DIRECTORS OF PUBLIC WORKS
DIRECTOR OF PUBLIC WORKS

DESIGNED BY: V. Jafri
DRAWN BY: K. Covington & G. McVicar
CHECKED BY: M. D. J. & S.E.S.
SCALE: As Shown
DATE: Dec. 2 1973
SHEET 54 OF 200 SHEETS
DRAWING NO. 18045

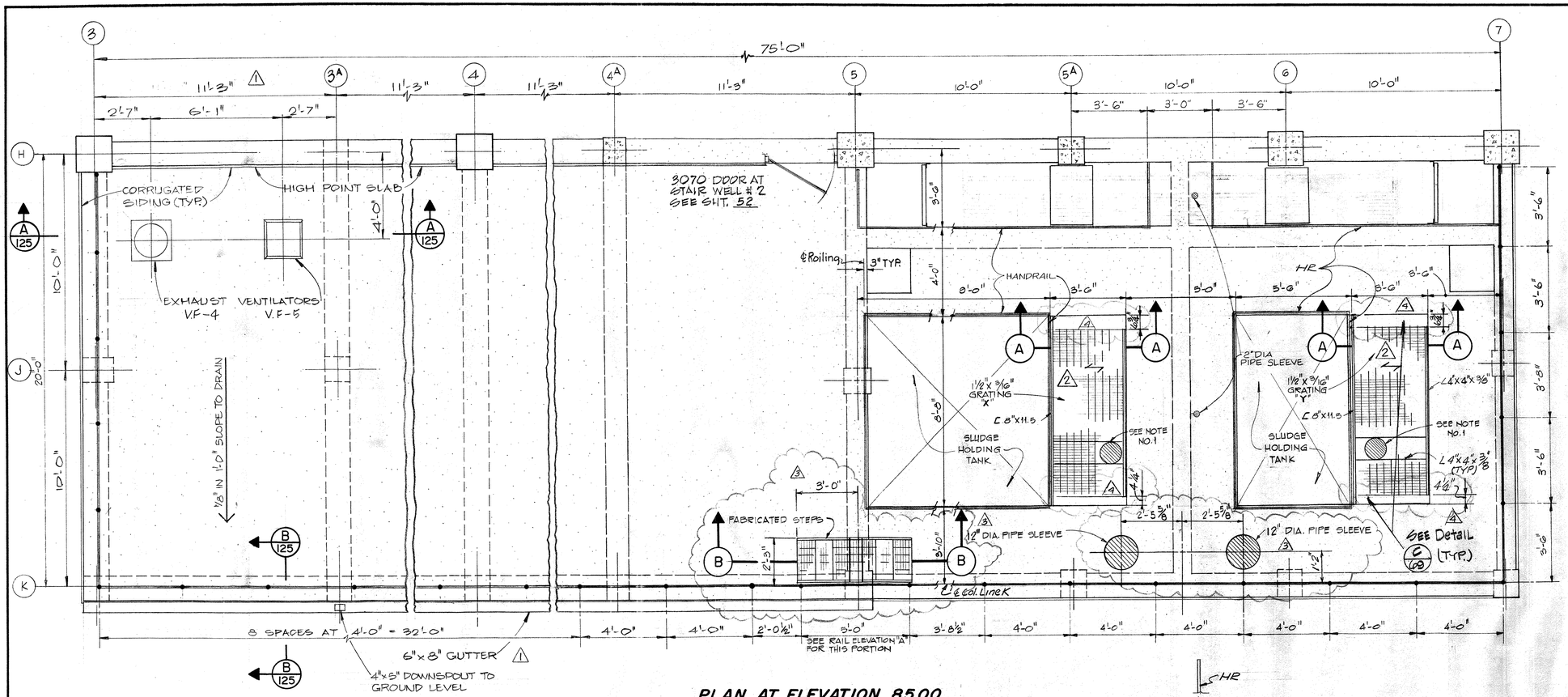

PLAN AT ELEVATION 85.00

SCALE: 3/8"=1'-0"

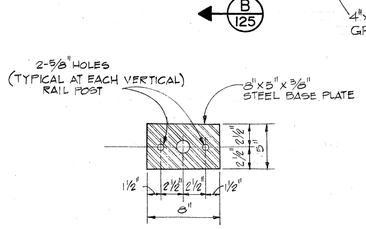

(TYP) HANDRAIL PLATE CONNECTION

NTS

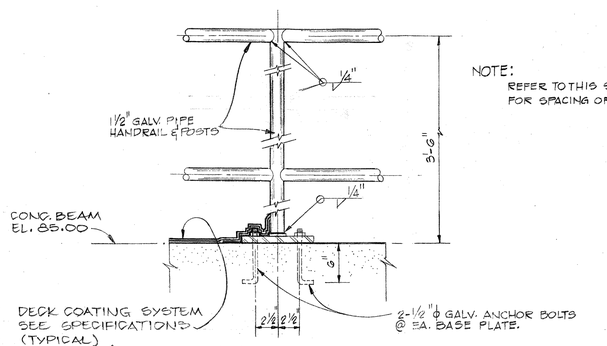

NOTE: REFER TO THIS SHEET FOR SPACING OF RAILPOSTS.

(TYP) HANDRAIL ELEVATION

NTS

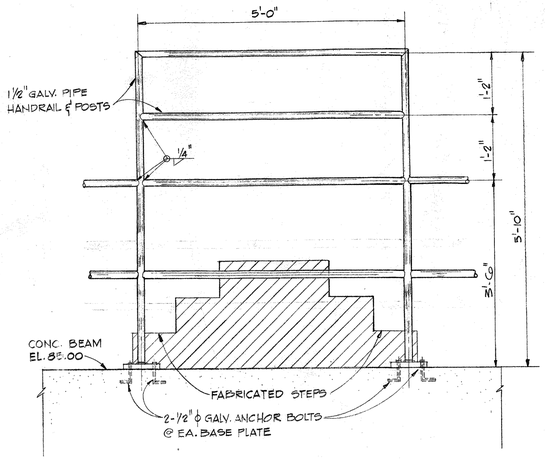

HANDRAIL ELEVATION "A"

SCALE: 3/4"=1'-0"

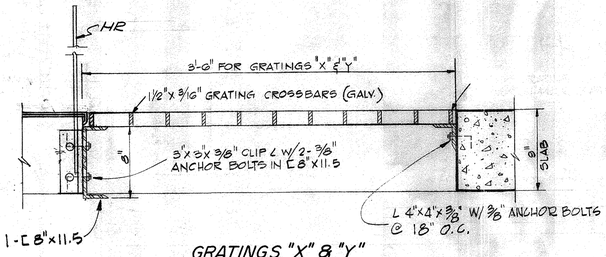

GRATINGS "X" & "Y" SECTION (A)

SCALE: 1½"=1'-0"

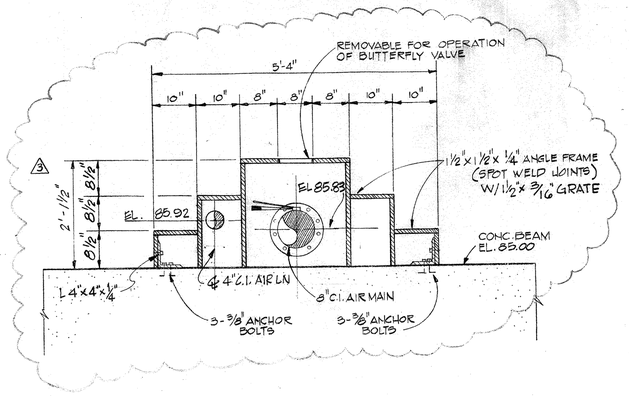

FABRICATED STEPS SECTION (B)

SCALE: 3/4"=1'-0"

NOTES:

1. HOLES IN GRATING "X" & "Y" TO BE LOCATED SIZED AND SPACED FROM CONSTANT HEAD TANK PIPING PLANS.
2. SEE FRAME & SUPPORT DETAILS FOR GRATINGS THIS DRAWING.

REV. NO.	DATE	DESCRIPTION	DESIGN	CHECKED
4	1-80	CONSTRUCTION REVISION CLARIFIED HOLDING TANK DETAILS	W.G.W.	H.J.K
3	11-78	CONSTRUCTION REVISIONS CHANGE 18" SLEEVES TO 12" AND REVISED CENTER CHANGING CLARIFIED STEP LOCATION	C.A.B.	H.J.K.
2	6-9-77	REV. GRATING, ADD WALK	J.C.S	K.R.L
1	3-7-77	GRATING ADDED TO TANK, ROOF EXTENDED TO ℄ 3, GUTTER, ROOF DECKING & VENTS. ADDED	J.C.S.	S.R.S.

CITY OF HOUSTON
DEPARTMENT OF PUBLIC WORKS

ALMEDA SIMS
SLUDGE DISPOSAL
PLANT 1973

CONSTANT HEAD TANK

PLAN AT ELEVATION 85.00

RECOMMENDED FOR APPROVAL:
BINKLEY & HOLMES, INC., CONSULTING ENGINEERS

APPROVED:
CHIEF ENGINEER — ASST. CHIEF ENGINEER
ASST. DIRECTORS OF PUBLIC WORKS
DIRECTOR OF PUBLIC WORKS

DESIGNED BY: V. Jafri
DRAWN BY: D. HOGAN
CHECKED BY: M. B. J.
SCALE: AS NOTED
DATE: DEC 1973
SHEET 55 OF 200 SHEETS
DRAWING NO. 18045

STATE OF TEXAS — PAUL R. HOLMES — 27638 — REGISTERED PROFESSIONAL ENGINEER

STATE OF TEXAS — JAMES A. BINKLEY — 24282 — REGISTERED PROFESSIONAL ENGINEER

NOTE:
DETAILS AND REINFORCING STEEL FOR FOOTINGS AND COLUMNS ALONG COL. LINE "H" ARE SHOWN WITH FILTER ROOM DETAILS.

63'-9"

11'-3" | 11'-3" | 11'-3" | 10'-0" | 10'-0" | 10'-0"

12" | 3'-4" | 2'-0" | 3'-4" | 1'-7"

3A | 4 | 4A | 5 | 5A | 6 | 7

H | J | K

10'-0" SLAB CONT. ON SHT. 122

10'-0"

TOP GRATE EL. 54.25

C.O.

4" POLYPROPYLENE FLOOR DRAIN (TYPICAL FOR CHEMICAL ROOM)

6" POLYPROPYLENE

FOR DRAIN LINE SEE SHT. 73

54.25

16" SQ. COL. W/ TYPE "3" FOOTING

GB-2

AIRLIFT BLOWER PAD

5'-5"

6'-1"

AIRLIFT BLOWER PAD

1/2" PREMOLDED EXP. JOINT (TYP. ALL AROUND)

TOP GRATE EL. 54.25

EL. 54.50

6" D.I. M.J. DRAIN SLOPE @ 0.5%

16" SQ. COLUMN W/ TYPE "1" FOOTING

TOP GRATE EL. 54.25

16"x24" GRADE BEAM SEE SHT. No. 57 FOR DETAIL

GB-2

EL. 54.42

SEE AERATION BLOWER PAD DETAIL

F 57

EL. 54.42

EL. 54.42

16" SQ. COLUMN W/ TYPE "1A" FOOTING

6" CONC. SLAB W/ 6"x 6"x 6/6 W.W.M.

REST ROOM SEE SHT. 73

54.25

16" SQ. COL. W/ TYPE "2" FOOTING

EL. 54.50

54.33

54.50

TOP GRATE EL. 54.25

6" POLYPROPYLENE

16" SQ. COLUMN W/ TYPE "2" FOOTING

16" SQ. COL. W/ TYPE "2" FOOTING 7'-0" 8"

SAMPLING PUMP & DENSITY METER PAD

INSTRUMENT AIR COMPRESSORS PAD

13'-8"

GB-2

EL. 54.5

12'-5½"

EL. 54.50

2'-6"

EL. 54.50

12'-5½"

EL. 54.50

GB-1

2'-2"

GB-1

GB-1

GB-2

GB-2

GB-2

16" SQ. COL. W/ TYPE "2A" FTG.

16" SQ. COL. W/ TYPE "2A" FOOTING

16" SQ. COL. W/ TYPE "1A" FTG.

16" x 24" GRADE BEAM SEE SHT. NO. 57 FOR DETAIL.

6" D. I. DRAIN ENG. IN CONC. FROM ELEVATOR SHAFT TO M.H. ELEV. 46.00 @ M.H.

7'-4"

10"

7'-4"

4'-9" | 3'-5" | 3'-3" | 2'-0" | 3'-5" | 2'-9" | 2'-0" | 2'-0" | 4'-11" | 3'-1"

STRUCTURAL SLAB PLAN AT ELEVATION 54.50

Scale: 3/8"=1'-0"

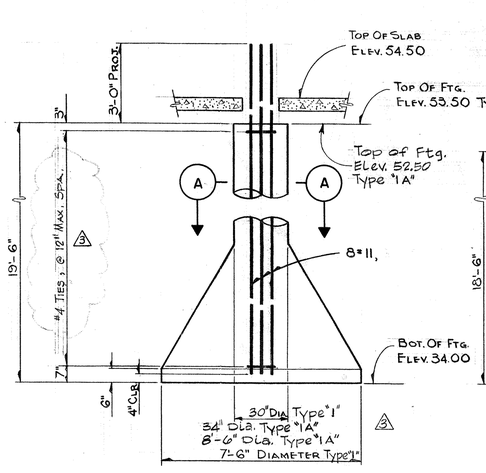

TYPE "1" & "1A" FOOTING

Scale: 3/8"=1'-0"

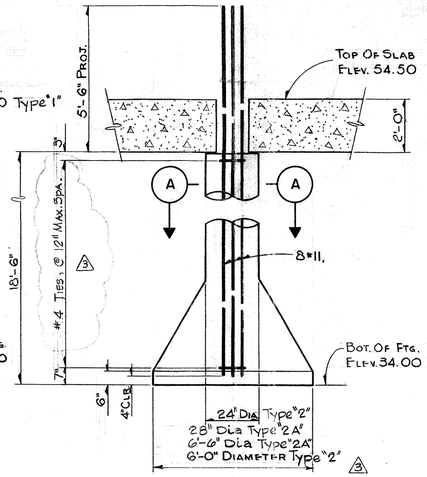

TYPE "2" & "2A" FOOTING

Scale: 3/8"=1'-0"

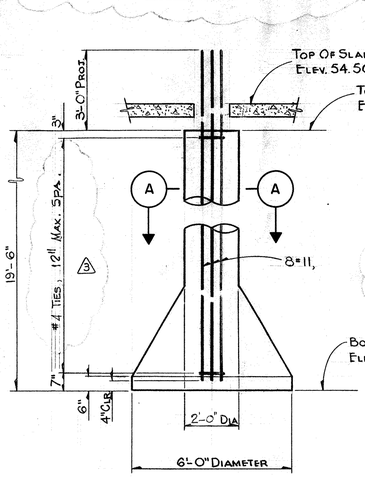

TYPE "3" FOOTING

Scale: 3/8"=1'-0"

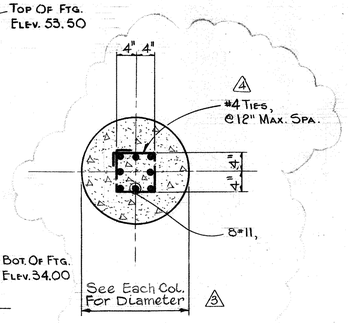

SECTION A

Scale: 3/4"=1'-0"

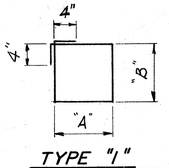

TYPE "1"

BENT BAR DETAILS

REV. NO.	DATE	DESCRIPTION	DESIGN	CHECKED
4	11-78	Construction Revisions Change 14" Cols to 16" Cols.	J.L.R.	H.J.K.
3	6-78	Foundation Revisions	H.J.K.	K.R.L.
2	2-77	STEEL SCHEDULE & GENERAL MODIFICATIONS	J.C.J.	S.R.S.
1	4-76	REVISED AIRLIFT BLOWER PAD	J.C.J.	D.R.Y.

STATE OF TEXAS — JAMES A. BINKLEY — No. 24282 — REGISTERED PROFESSIONAL ENGINEER

STATE OF TEXAS — PAUL R. HOLMES — 27638 — REGISTERED PROFESSIONAL ENGINEER

CITY OF HOUSTON
DEPARTMENT OF PUBLIC WORKS

ALMEDA SIMS SLUDGE DISPOSAL PLANT – 1973

CONSTANT HEAD TANK STRUCTURAL SLAB PLAN AT ELEV. 54.50

RECOMMENDED FOR APPROVAL:
BINKLEY & HOLMES, INC., CONSULTING ENGINEERS

APPROVED:
CHIEF ENGINEER — ASST. CHIEF ENGINEER
ASST. DIRECTORS OF PUBLIC WORKS
DIRECTOR OF PUBLIC WORKS

DESIGNED BY: V. Jafri
DRAWN BY: V. Jafri
CHECKED BY: M. D. J.
SCALE: As Shown
DATE: DEC. 1973
SHEET 56 OF 200 SHEETS
DRAWING NO. 18045

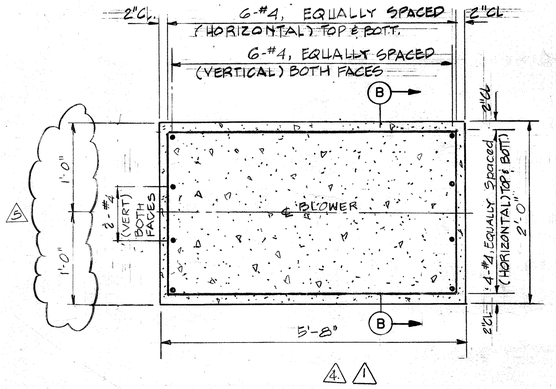

PLAN - TYP. AIR LIFT BLOWER PAD - 12 P.S.I.

Scale: None

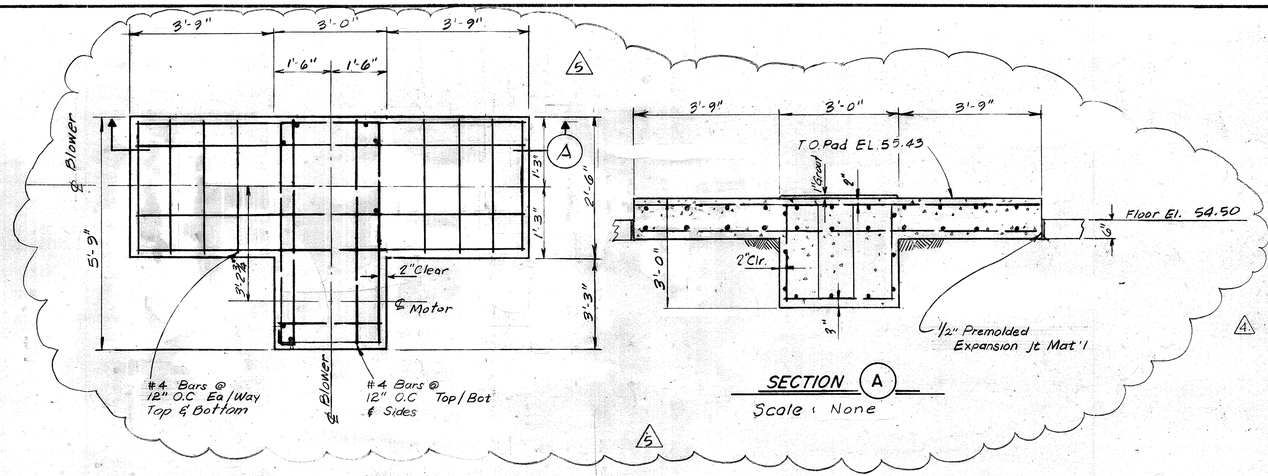

SECTION (A)

Scale : None

PLAN - TYP. SLUDGE AERATION BLOWER PAD - (F/57)

Scale None

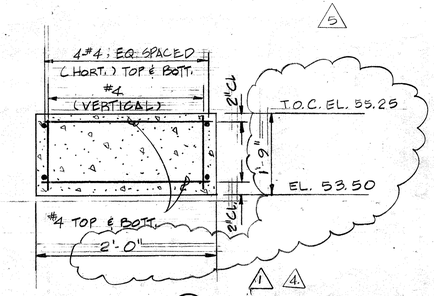

SECTION (B)

Scale : None

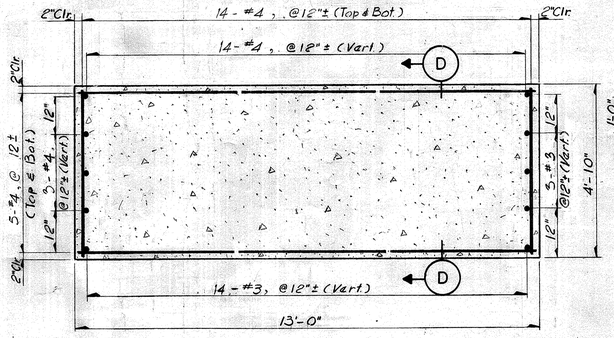

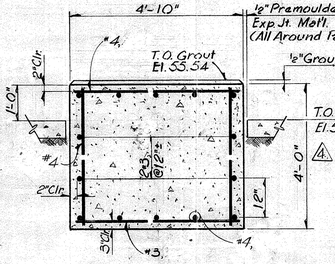

SECTION - (D)

Scale: ½" = 1'-0"

PLAN - INSTRUMENT AIR COMPRESSOR PAD

Scale: ½" = 1'-0"

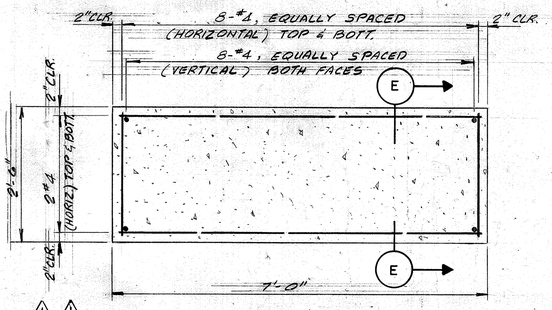

PLAN - SAMPLING PUMP & DENSITY METER PAD

SCALE: ¾" = 1'-0"

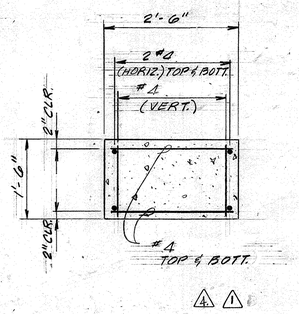

SECTION (E)

SCALE: ¾" = 1'-0"

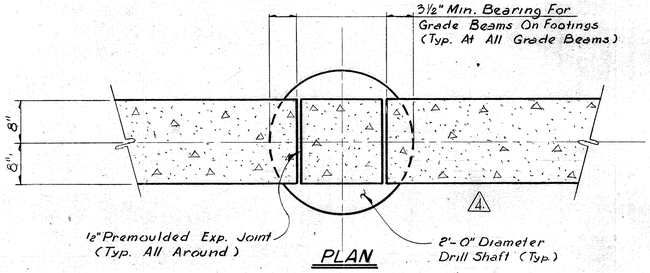

PLAN

GRADE BEAM BEARING DETAIL

Scale: 1"=1'-0"

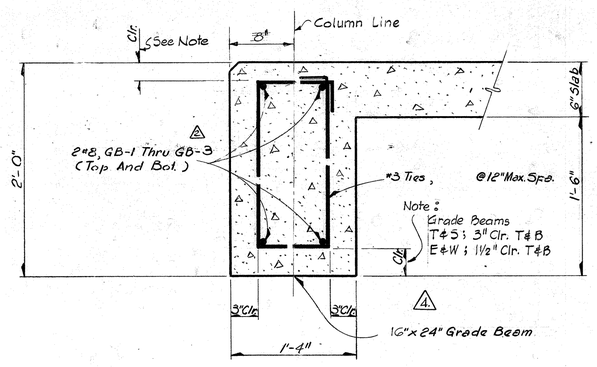

TYPICAL GRADE BEAM SECTION

Scale: 1½"=1'-0"

REV. NO	DATE	DESCRIPTION	DESIGN	CHECKED
5	6-79	Construction Revisions Blower Foundation Dimension Changes	A.C.B	H.J.K.
4	11-78	Construction Revisions	J.L.R	H.J.K.
3	6-77	Add Note	J.C.S	K.R.L
2	2-77	STEEL SCHEDULE & BAR MARK CHANGED	J.C.S.	S.R.S.
1	4-76	ADDED SAMPLING PUMP & DENSITY METER PAD, & REVISED AIRLIFT BLOWER PAD	J.C.J.	D.R.Y.

REINFORCING STEEL SCHEDULE FOR FOUNDATION PADS & GRADE BEAMS

MARK	TYPE	SIZE	No REQD.	LENGTH PER BAR	BENT BAR DIM. "A"	"B"
SA-1	Str.	#4	36	2'-10"		
SA-2	Str.	#4	18	5'-7"		
SA-3	Str.	#4	18	6'-2"		
SA-4	Str.	#4	72	2'-7"		
SA-5	2	#4	9	12'-2"	5'-7"	2'-9"
SA-6	2	#4	9	13'-4"	6'-2"	3'-4"
GB-1	Str.	#8	16	9'-8"	4	
GB-2	Str.	#8	40	8'-5"	4	
GB-3	Str.	#8	4	18'-5"	4	
GT-1	3	#3	173	5'-4"	1'-7"	0'-8"
AL-1	Str.	#4	8	5'-5"		
AL-2	Str.	#4	12	5'-1"	1	
AL-3	Str.	#4	16	1'-6"		
AC-1	Str.	#4	28	4'-6"		
AC-2	Str.	#4	34	3'-8"		
AC-3	Str.	#4	14	12'-8"		
DM-1	Str.	#4	4	6'-9"		
DM-2	Str.	#4	16	2'-3"	1	
DM-3	Str.	#4	16	1'-3"		

NOTE

1. Equipment Foundation Dimension And Elevation Shown Are Approximate And Are To Be Adjusted Read By Equipment Furnished.

3

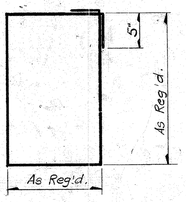

BENT BAR DETAILS

N.T.S.

CITY OF HOUSTON
DEPARTMENT OF PUBLIC WORKS

ALMEDA SIMS SLUDGE DISPOSAL PLANT - 1973

CONSTANT HEAD TANK FOUNDATION PADS & GRADE BEAM DETAILS

RECOMMENDED FOR APPROVAL:
BINKLEY & HOLMES, INC., CONSULTING ENGINEERS

APPROVED:
CHIEF ENGINEER — ASST. CHIEF ENGINEER

ASST. DIRECTORS OF PUBLIC WORKS
DIRECTOR OF PUBLIC WORKS

DESIGNED BY: V. Jafri
DRAWN BY: V. Jafri
CHECKED BY: M.D.W.
SCALE: As Shown
DATE: DEC. 1973
SHEET 57 OF 200 SHEETS
DRAWING NO. 18045

REINFORCING STEEL SCHEDULE FOR PIPE OPENINGS IN SLAB AND WALLS

MARK	TYPE	SIZE	NO. REQD. PER BAR	LENGTH BENT BAR DIM. A	B
PP-1	STR.	#4	4	3'-11"	
PP-2	STR.	#4	8	1'-10"	
PP-3	STR.	#4	4	3'-4"	
PP-4	STR.	#4	4	5'-6"	

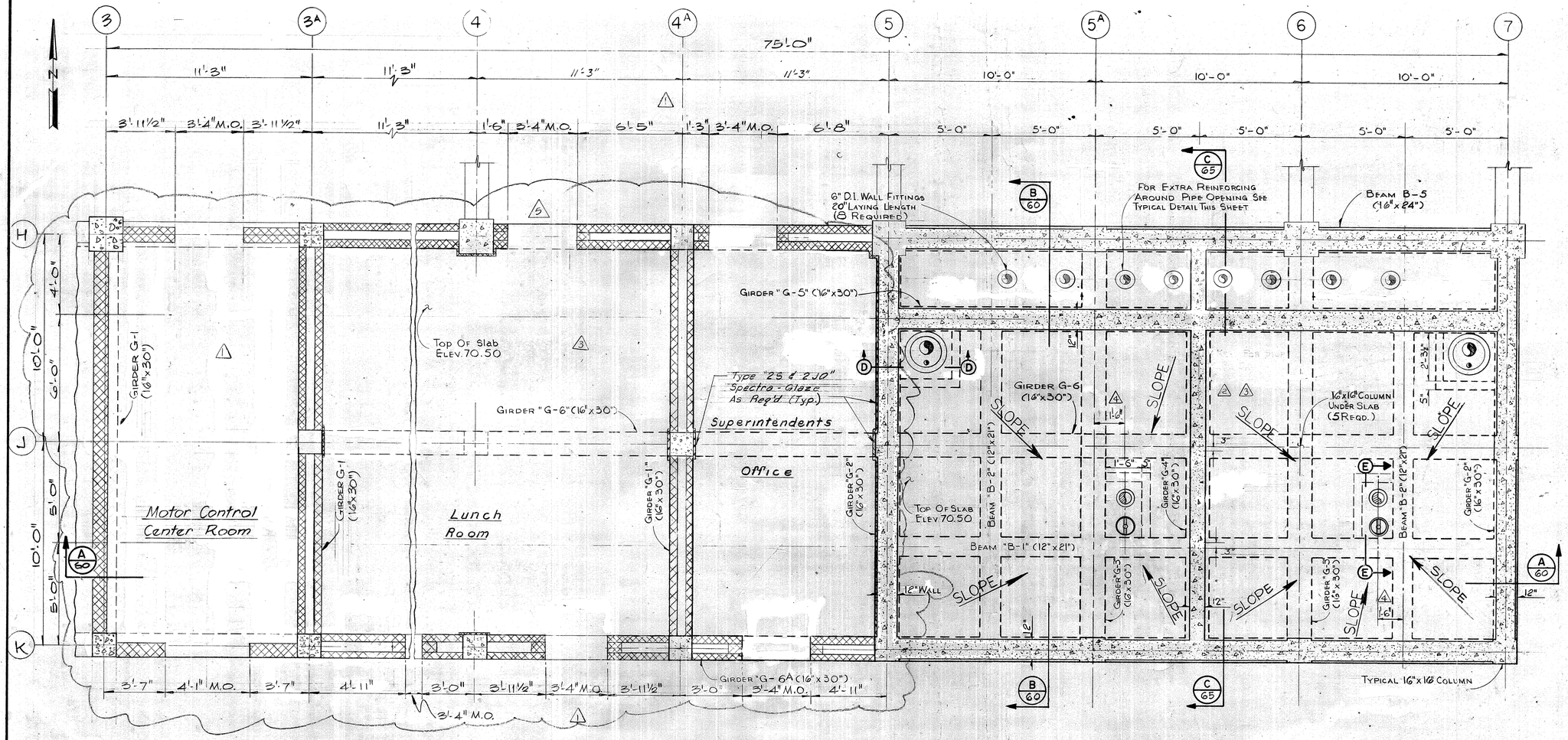

SECTIONAL PLAN AT ELEV. 79.75 & 70.50

SCALE: 3/16" = 1'-0"

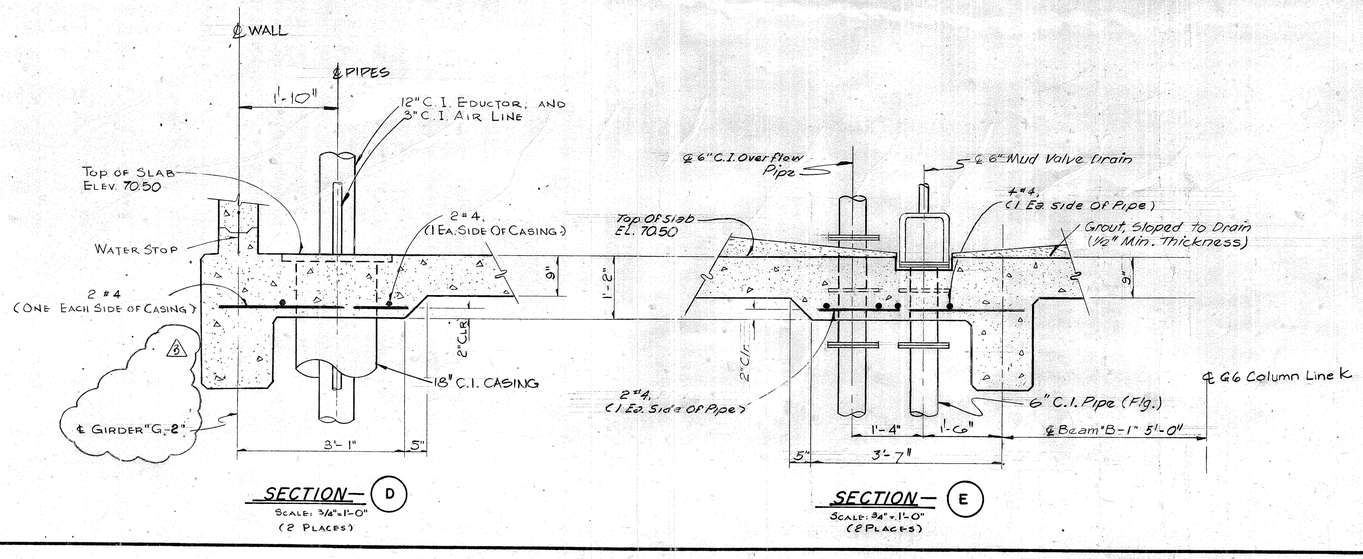

REV. N°	DATE	DESCRIPTION	DESIGN	CHECKED
5	10-79	Construction Revisions Modify Block Walls	D.D.C.	H.J.K.
4	6-79	CONSTRUCTION REVISION CHANGED OVERFLOW & MUD VALVE LOCATION TO CLEAR BEAMS	W.G.W	H.J.K
3	11.78	Construction Revision All 14" Beams Girders & Columns Changed to 16".	J.L.R.	H.J.K
2	6-77	REMOVE STOP LOG REV. PIPE OPENINGS	J.C.S	K.R.L
1	3-3-77	M.C.C. ROOM ADDED DIMS. REVISED	J.C.S	S.R.'S

JAMES A. BINKLEY — 24280 — REGISTERED PROFESSIONAL ENGINEER

PAUL P. HOLMES — 17503 — REGISTERED PROFESSIONAL ENGINEER

CITY OF HOUSTON
DEPARTMENT OF PUBLIC WORKS

ALMEDA-SIMS SLUDGE DISPOSAL PLANT-1973

CONSTANT HEAD TANK
SECTIONAL PLAN
AT ELEV. 79.75

RECOMMENDED FOR APPROVAL:
BINKLEY & HOLMES, INC., CONSULTING ENGINEERS

APPROVED:
CHIEF ENGINEER — ASST. CHIEF ENGINEER
ASST. DIRECTORS OF PUBLIC WORKS
DIRECTOR OF PUBLIC WORKS

DESIGNED BY: V. Jafri
DRAWN BY: V. Jafri
CHECKED BY: M. D. J
SCALE: As Shown
DATE: DEC. 1973
SHEET 58 OF 200 SHEETS
DRAWING NO. 18045

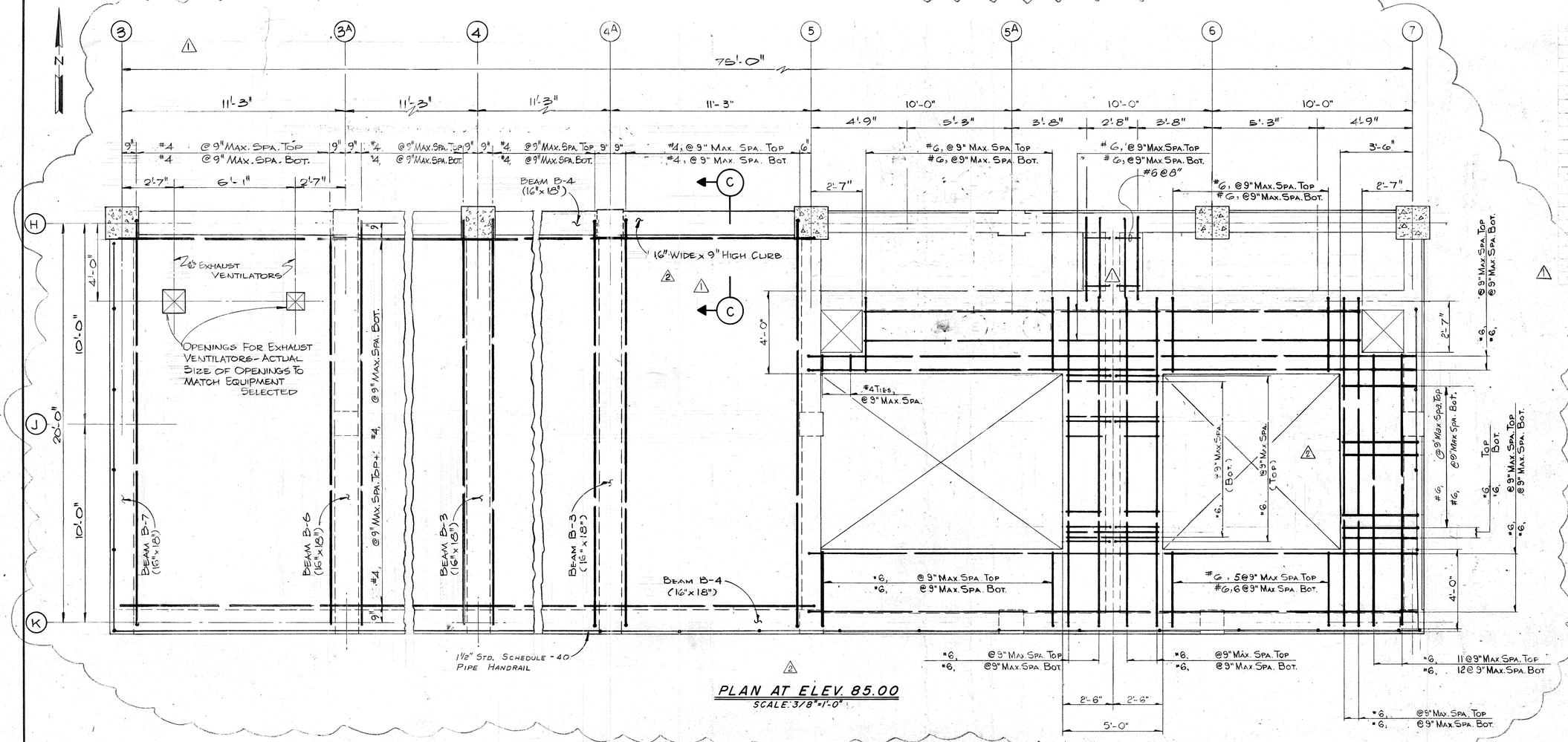

PLAN AT ELEV. 85.00

SCALE: 3/8"=1'-0"

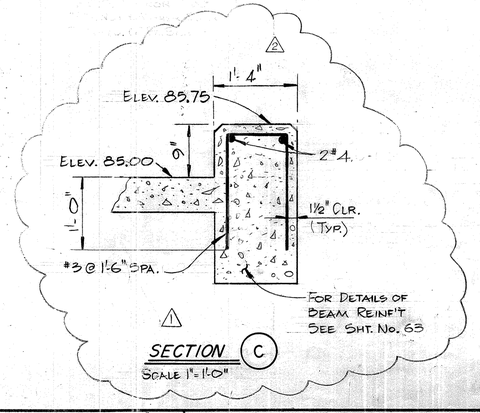

SECTION (C)

SCALE 1"=1'-0"

REV. NO.	DATE	DESCRIPTION	DESIGN	CHECKED
2	11-78	Construction Revision Revised Beams From 14" x 30" To 16"x 30"	J.L.R.	H.J.K.
1	3-1-77	OPERATOR SUPPORTS REV'D. ROOF SLAB EXTENDED TO ℄S. CURB & SECTIONS C & E ADDED	J.C.S.	S.R.S.

CITY OF HOUSTON
DEPARTMENT OF PUBLIC WORKS

ALMEDA SIMS
SLUDGE DISPOSAL
PLANT – 1973

CONSTANT HEAD TANK

SLAB AT ELEV. 85.00

RECOMMENDED FOR APPROVAL:
BINKLEY & HOLMES, INC., CONSULTING ENGINEERS

APPROVED:
CHIEF ENGINEER — ASST. CHIEF ENGINEER

ASST. DIRECTORS OF PUBLIC WORKS
DIRECTOR OF PUBLIC WORKS

DESIGNED BY: V. Jafri
DRAWN BY: V. Jafri
CHECKED BY: M.D.J.
SCALE: As Shown
DATE: DEC. 1973
SHEET 52 OF 200 SHEETS
DRAWING NO. 18045

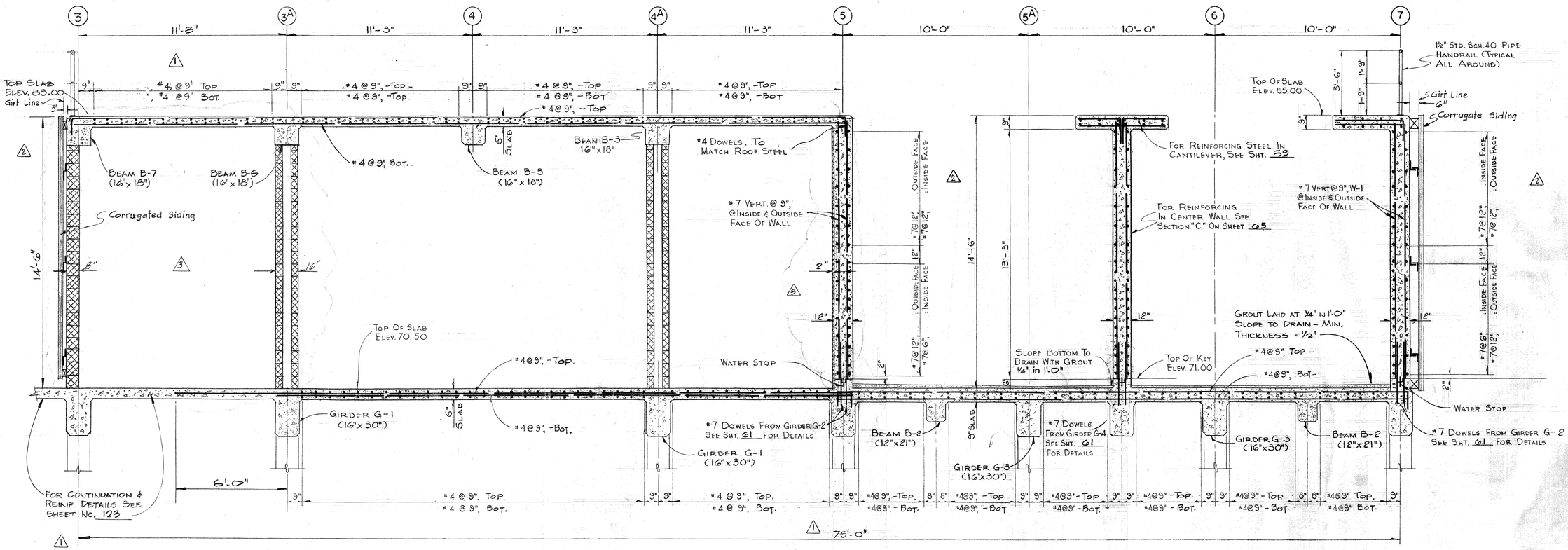

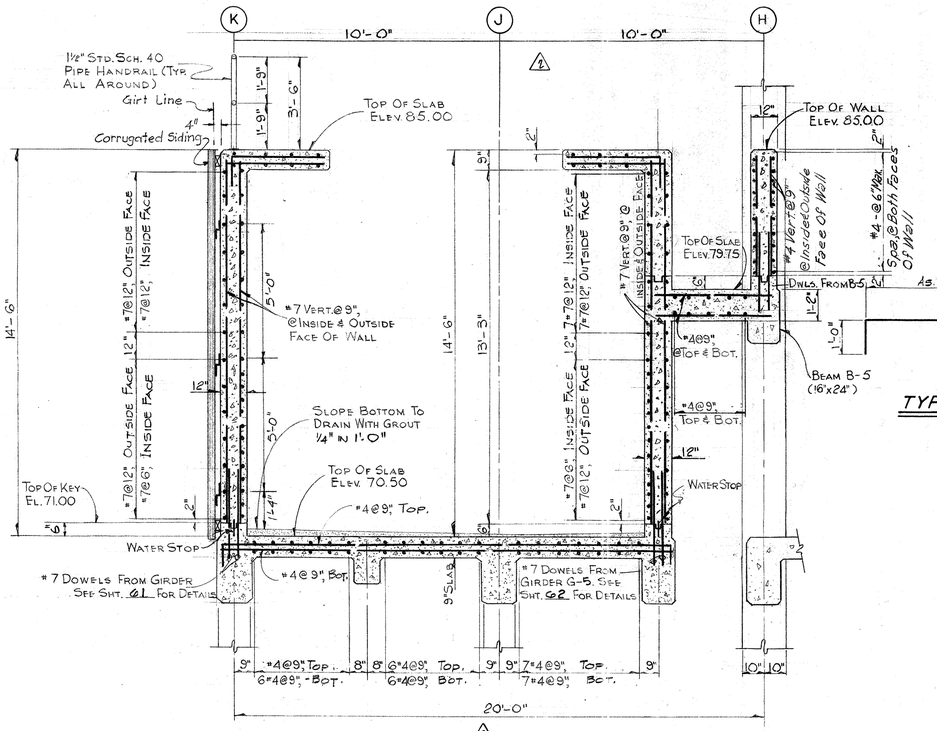

SECTION (A/60)
scale: 3/8"=1'-0"

SECTION (B/60)
scale: 3/8"=1'-0"

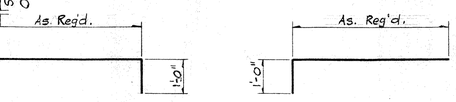

BENT BAR DETAIL

REINFORCING STEEL SCHEDULE FOR SLABS AND WALLS

MARK	TYPE	SIZE	NO. REQD.	LENGTH PER BAR	BENT BAR DIM. A	B
S-1	1	#4	101	22'-11"	20'-11"	1'-0"
S-2	STR.	#4	101	20'-8"		
S-3	1	#4	19	32'-11"	30'-11"	1'-0"
S-4	STR.	#4	19	30'-8"		
S-5	STR.	#4	80	4'-8"		
S-6	STR.	#4	10	30'-6"		
S-7	2	#4	26	47'-8"	45'-8"	1'-0"
S-8	1	#4	3	18'-11"	16'-11"	1'-0"
S-9	STR.	#4	86	16'-8"		
S-10	2	#4	26	41'-2"	40'-2"	1'-0"
S-11	STR.	#4	26	34'-11"		
S-12	STR	#4	26	45'-10"		
W-1	STR.	#7	125	13'-10"		
W-2	1	#7	68	22'-11"	20'-11"	1'-0"
W-3	1	#7	68	32'-11"	30'-11"	1'-0"
W-4	1	#4	20	32'-11"	30'-11"	1'-0"
W-5	STR.	#4	72	4'-5"		
DR-1	2	#4	26	2'-3"	1'-3"	1'-0"

REV. Nº	DATE	DESCRIPTION	DESIGN	CHECKED
3	10-79	Construction Revisions Modify Block Walls	A.D.C.	H.J.K.
2	11-78	CONSTRUCTION REVISION REVISED BEAMS FROM 14"x30" TO 16"x30" DELETED BAR SCHEDULE	J.L.R.	H.J.K.
1	3-2-77	WEST SIDE OF BLDG. EXTENDED - REINF. & SCHEDULES REV'D.	J.C.S.	S.R.S.

STATE OF TEXAS — JAMES A. BINKLEY — 24282 — REGISTERED PROFESSIONAL ENGINEER

STATE OF TEXAS — PAUL R. HOLMES — 27638 — REGISTERED PROFESSIONAL ENGINEER

CITY OF HOUSTON
DEPARTMENT OF PUBLIC WORKS

ALMEDA SIMS SLUDGE DISPOSAL PLANT-1973

CONSTANT HEAD TANK

SECTIONAL ELEVATIONS

RECOMMENDED FOR APPROVAL:
BINKLEY & HOLMES, INC., CONSULTING ENGINEERS

APPROVED:
CHIEF ENGINEER — ASST. CHIEF ENGINEER
ASST. DIRECTORS OF PUBLIC WORKS
DIRECTOR OF PUBLIC WORKS

DESIGNED BY: V. Jafri
DRAWN BY: V. Jafri
CHECKED BY: M.P.J
SCALE: As Shown
DATE: DEC. 1973
SHEET 60 OF 200 SHEETS
DRAWING NO. 18045

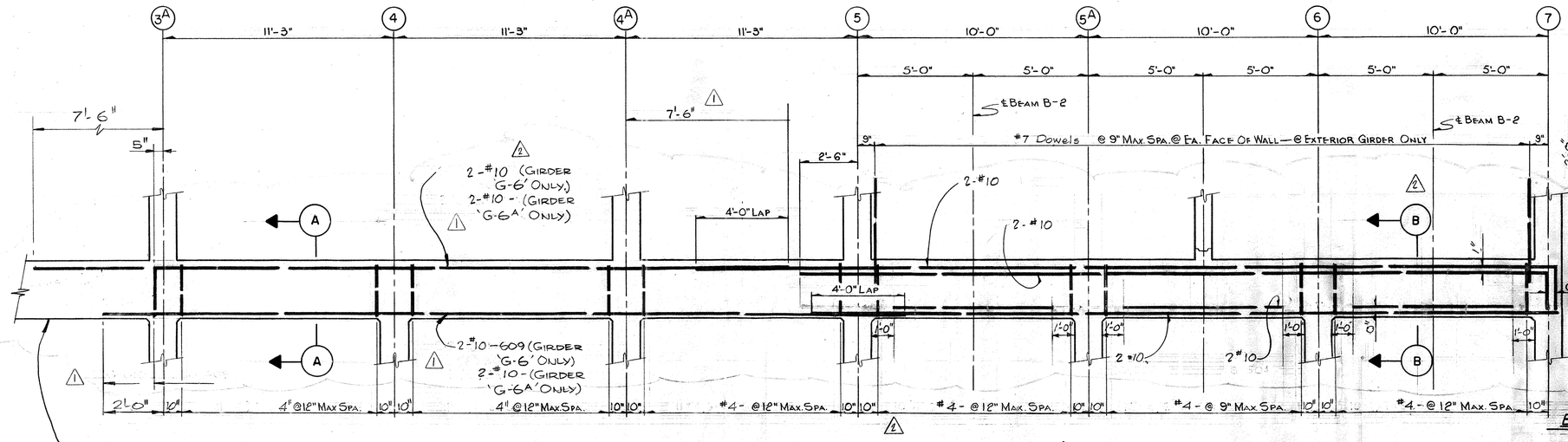

For Continuation of Girder 'G-6A' — See Sht. No. 124

ELEVATION GIRDERS G-6 & G-6A

Scale: 3/8"=1'-0"

As Reg'd.

2'-0"

TYPE '1'

As Reg'd.

2'-0"

TYPE '2'

5"

As Reg'd.

10"

As Reg'd.

TYPE '3'

BENT BAR DETAILS

N.T.S.

REINFORCING STEEL SCHEDULE

FOR GIRDERS

MARK	TYPE	SIZE	NO. REQD	LENGTH PER BAR	BENT BAR DIM. 'A'	'B'
		GIRDER G-2				
G-201	2	#8	10	24'-11"	20'-11"	2'-0"
G-202	STR.	#8	8	20'-11"		
G-203	3	#3	56	6'-11"	2'-11½"	0'-11"
G-204	STR.	#7	52	4'-6"		
		GIRDER G-3				
G-301	2	#8	10	24'-11"	20'-11"	2'-0"
G-302	2	#7	4	24'-9"	20'-9"	2'-0"
G-303	STR.	#10	8	20'-11"		
G-304	3	#4	56	6'-11"	2'-11½"	0'-11"
		GIRDER G-4				
G-401	2	#8	8	20'-11"	16'-11"	2'-0"
G-402	STR.	#8	3	16'-11"		
G-403	3	#3	16	6'-11"	2'-11½"	0'-11"
G-404	STR.	#7	21	4'-6"		
		GIRDER G-6's G-6A'				
G-601	1	#8	6	40'-2"	38'-2"	2'-0"
G-602	1	#8	4	34'-11"	32'-11"	2'-0"
G-603	STR.	#8	6	32'-5"		
G-604	STR.	#8	4	32'-11"		
G-605	3	#4	132	6'-11"	2'-3"	0'-11"
G-606	STR.	#7	39	4'-6"		
G-607	1	#8	3	32'-5"	30'-5"	2'-0"
G-608	STR.	#8	3	37'-6"		
G-609	STR.	#8	3	36'-2"		
G-610	STR.	#8	3	37'-9"		

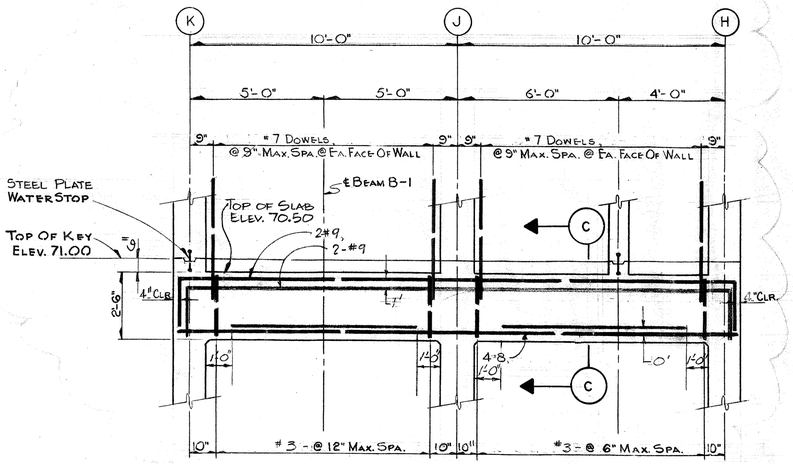

ELEVATION GIRDER G-2

(2 REQ'D)

Scale: 3/8"=1'-0"

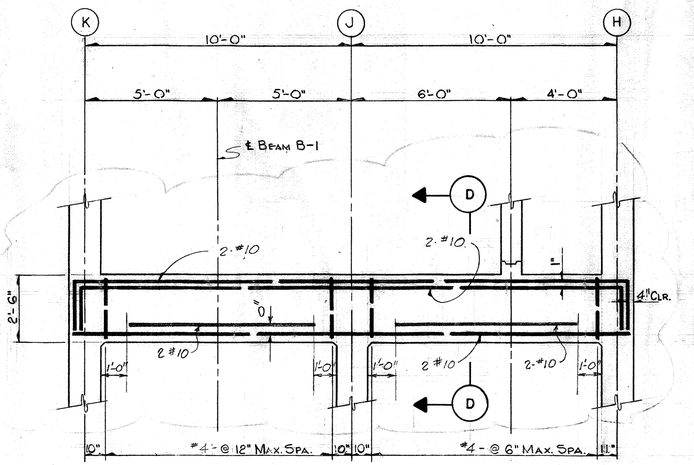

ELEVATION GIRDER G-3

Scale: 3/8"=1'-0"

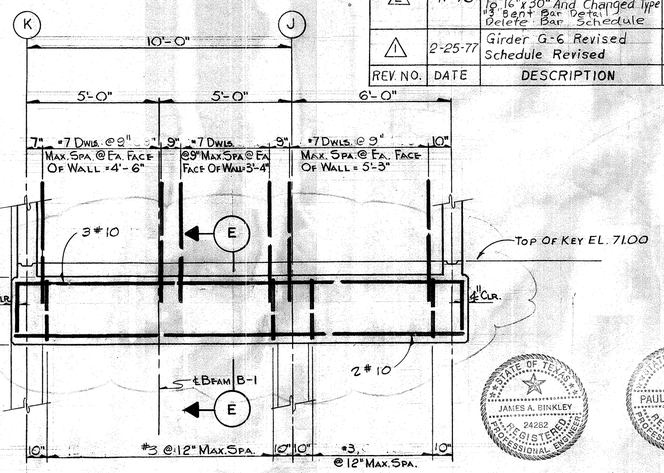

ELEVATION GIRDER G-4

Scale: 3/8"=1'-0"

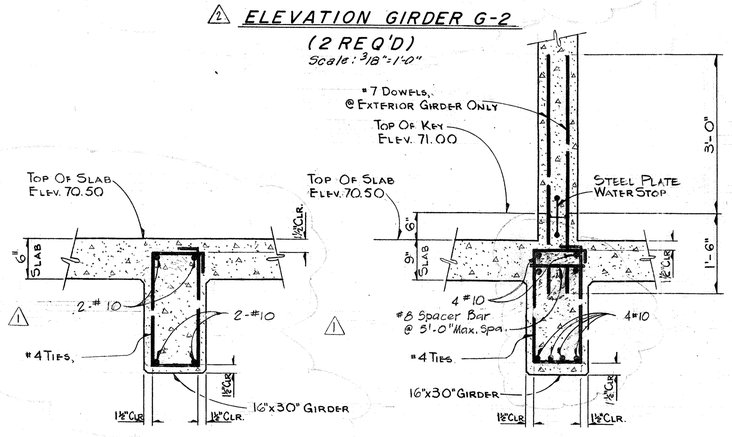

SECTION (A)

Scale: 3/4"=1'-0"

SECTION (B)

Scale: 3/4"=1'-0"

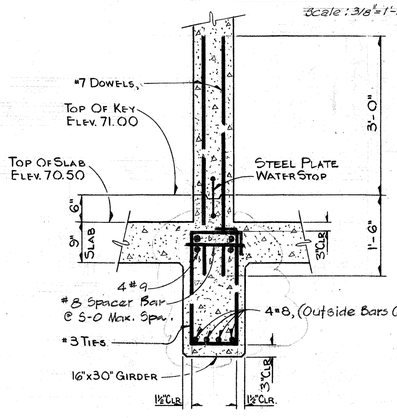

SECTION (C)

Scale: 3/4"=1'-0"

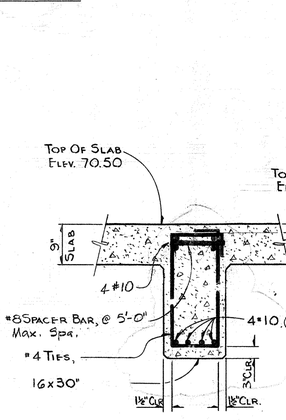

SECTION (D)

Scale: 3/4"=1'-0"

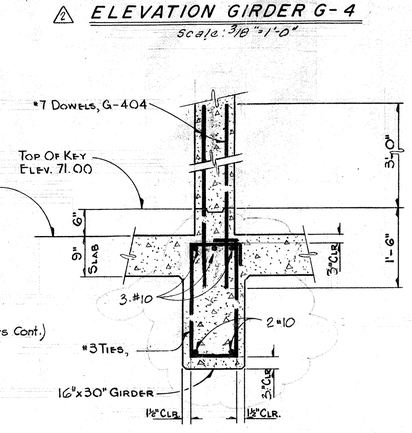

SECTION (E)

Scale: 3/4"=1'-0"

REV. NO.	DATE	DESCRIPTION	DESIGN	CHECKED
2	11-78	Construction Revision Revised Beams From 14"x30" To 16"x30" And Changed Type & Bent Bar Detail Delete Bar Schedule	J.L.R.	H.J.K.
1	2-25-77	Girder G-6 Revised Schedule Revised	J.C.S.	S.R.S.

State of Texas — James A. Binkley — 24262 — Registered Professional Engineer

State of Texas — Paul R. Holmes — 27638 — Registered Professional Engineer

CITY OF HOUSTON
DEPARTMENT OF PUBLIC WORKS

ALMEDA SIMS SLUDGE DISPOSAL PLANT - 1973

CONSTANT HEAD TANK
GIRDER 2, 3, 4, & 6
SECTIONS & DETAILS

RECOMMENDED FOR APPROVAL:
BINKLEY & HOLMES, INC., CONSULTING ENGINEERS

APPROVED:
CHIEF ENGINEER — ASST. CHIEF ENGINEER
ASST. DIRECTORS OF PUBLIC WORKS
DIRECTOR OF PUBLIC WORKS

DESIGNED BY: V. JAFRI
DRAWN BY: V. JAFRI
CHECKED BY: M.D.J
SCALE: As Shown
DATE: DEC. 1973
SHEET 61 OF 200 SHEETS
DRAWING NO. 18045

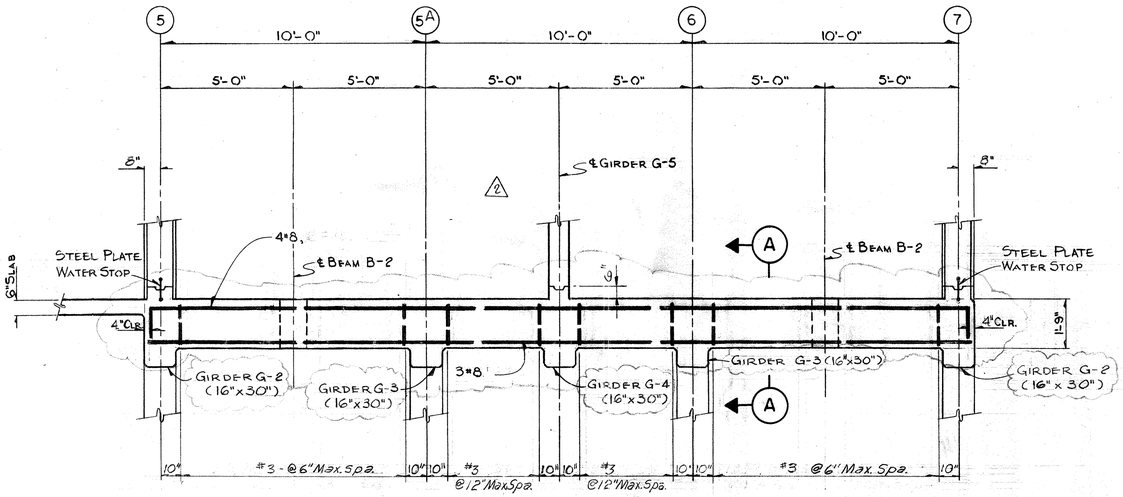

2 ELEVATION BEAM B-1
SCALE: 3/8"=1'-0"

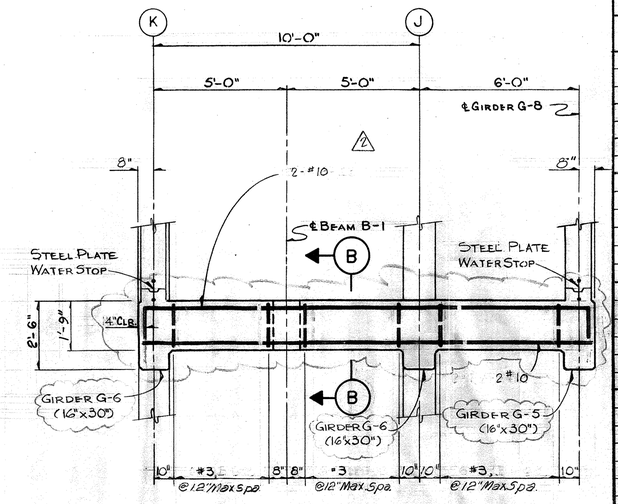

2 ELEVATION BEAM B-2
SCALE: 3/8"=1'-0"

REINFORCING STEEL SCHEDULE
FOR BEAMS AND GIRDERS

MARK	TYPE	SIZE	No. REQ'D.	LENGTH PER BAR	BENT BAR DIM. 'A'	BENT BAR DIM. 'B'
BEAM B-1						
B-101	1	#8	4	33'-5"	30'-11"	1'-3"
B-102	STR.	#8	3	30'-11"		
B-103	2	#3	46	5'-1"	1'-4½"	0'-9"
BEAM B-2						
B-201	1	#7	4	19'-5"	16'-11"	1'-3"
B-202	STR.	#7	4	16'-11"		
B-203	2	#3	32	5'-1"	1'-4½"	0'-9"
GIRDER G-1						
G-101	1	#9	8	24'-11"	20'-11"	2'-0"
G-102	STR.	#9	8	20'-11"		
G-103	2	#3	82	6'-1"	2'-1½"	0'-11"
GIRDER G-5						
G-501	1	#8	4	34'-11"	30'-11"	2'-0"
G-502	STR.	#8	3	30'-11"		
G-503	2	#3	30	6'-11"	2'-1½"	0'-11"
G-504	STR.	#7	39	4'-6"		

1 2

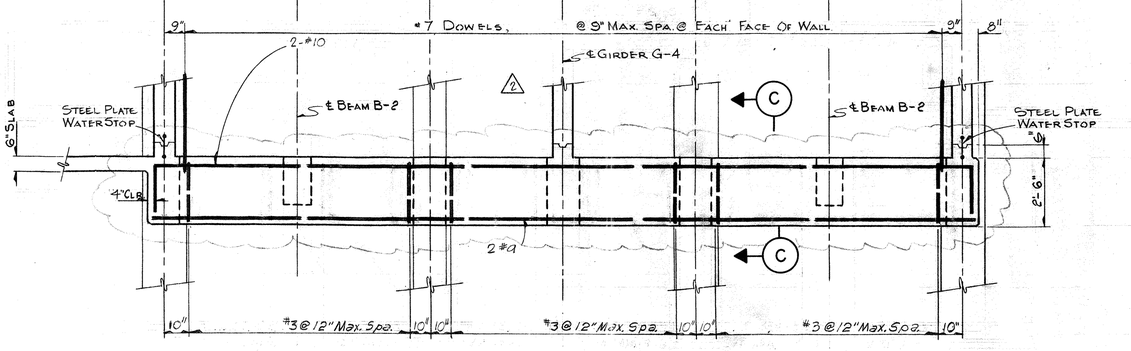

2 ELEVATION GIRDER G-5
SCALE: 3/8"=1'-0"

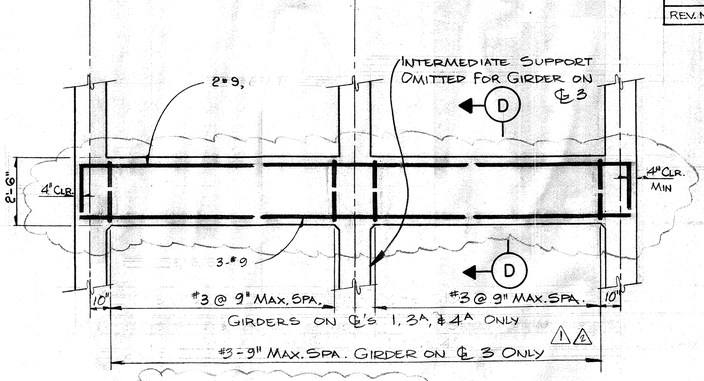

4 ELEVATION GIRDER G-1
SCALE: 3/8"=1'-0"

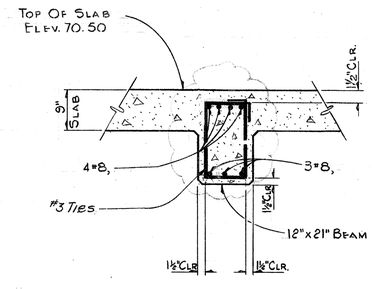

2 SECTION A
SCALE: 3/4"=1'-0"

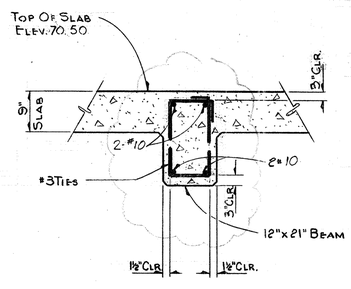

2 SECTION B
SCALE: 3/4"=1'-0"

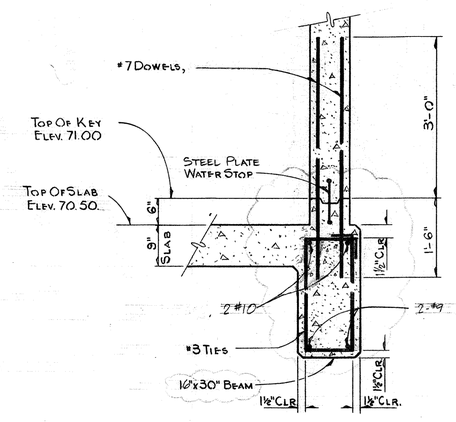

2 SECTION C
SCALE: 3/4"=1'-0"

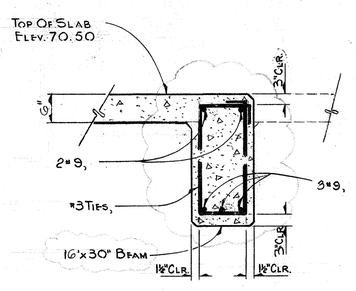

2 SECTION D
SCALE: 3/4"=1'-0"

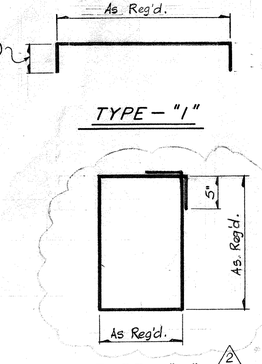

BENT BAR DETAILS
N.T.S

REV. Nº	DATE	DESCRIPTION	DESIGN	CHECKED
2	11-7	Construction Revision Revised Beams From 14"x30" To 16"x30" And Changed Type "2" Bent Bar Detail DELETED BAR SCHEDULE	J.L.R.	H.J.K.
1	2-25-77	GIRDER G-1 REVISED SCHEDULE REVISED	J.C.S.	S.R.S

STATE OF TEXAS — JAMES A. BINKLEY — 24252 — REGISTERED PROFESSIONAL ENGINEER

STATE OF TEXAS — PAUL R. HOLMES — 27638 — REGISTERED PROFESSIONAL ENGINEER

CITY OF HOUSTON
DEPARTMENT OF PUBLIC WORKS

ALMEDA SIMS SLUDGE DISPOSAL PLANT - 1973

CONSTANT HEAD TANK
BEAM & GIRDER DETAILS
BEAMS 1&2 - GIRDERS 1&5

RECOMMENDED FOR APPROVAL:
BINKLEY & HOLMES, INC., CONSULTING ENGINEERS

APPROVED:
CHIEF ENGINEER — ASST. CHIEF ENGINEER
ASST. DIRECTORS OF PUBLIC WORKS
DIRECTOR OF PUBLIC WORKS

DESIGNED BY: V. Jafri
DRAWN BY: V. Jafri
CHECKED BY: M. D.
SCALE: AS NOTED
DATE: DEC. 1973
SHEET 62 OF 200 SHEETS
DRAWING NO. 13045

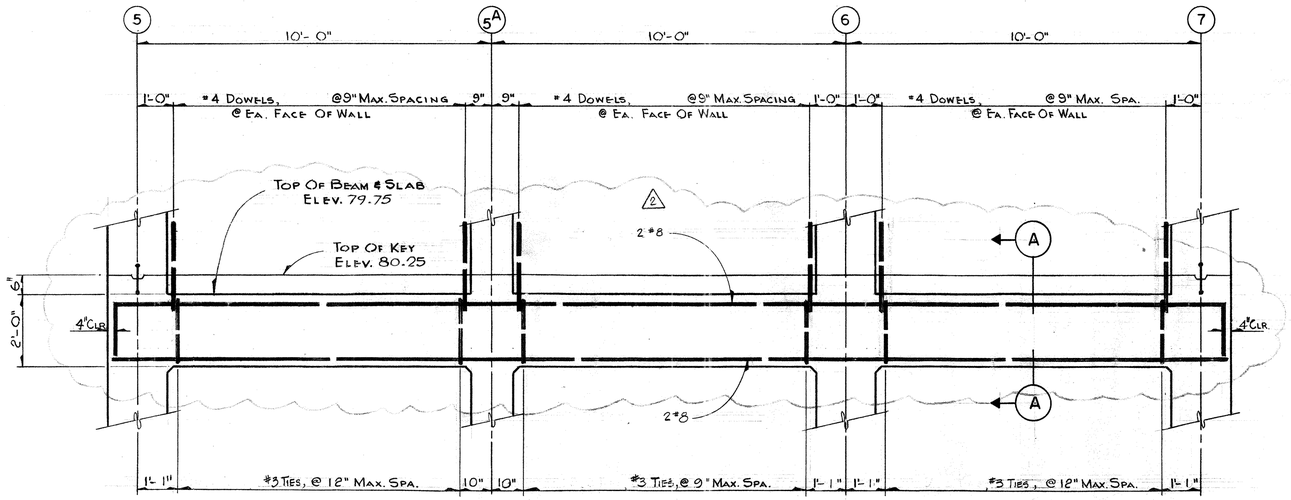

2 ELEVATION BEAM B-5

Scale: 1/2"=1'-0"

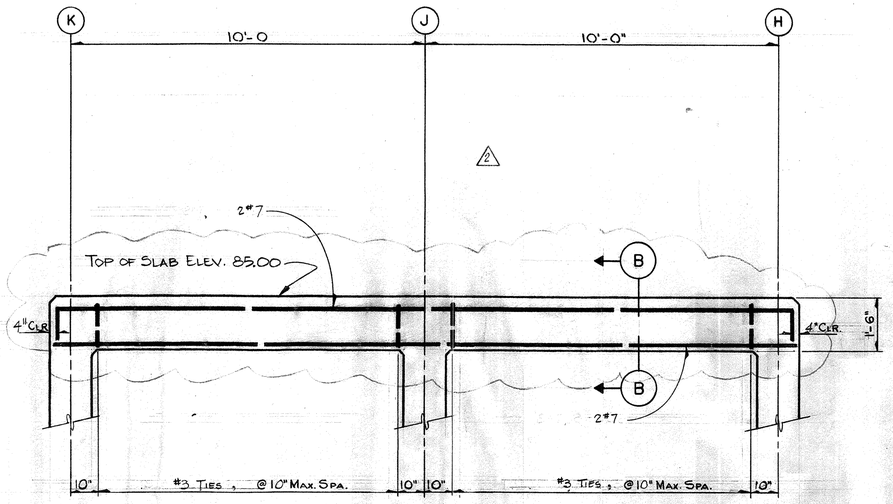

1 ELEVATION BEAM B-6

Scale: 1/2"=1'-0"

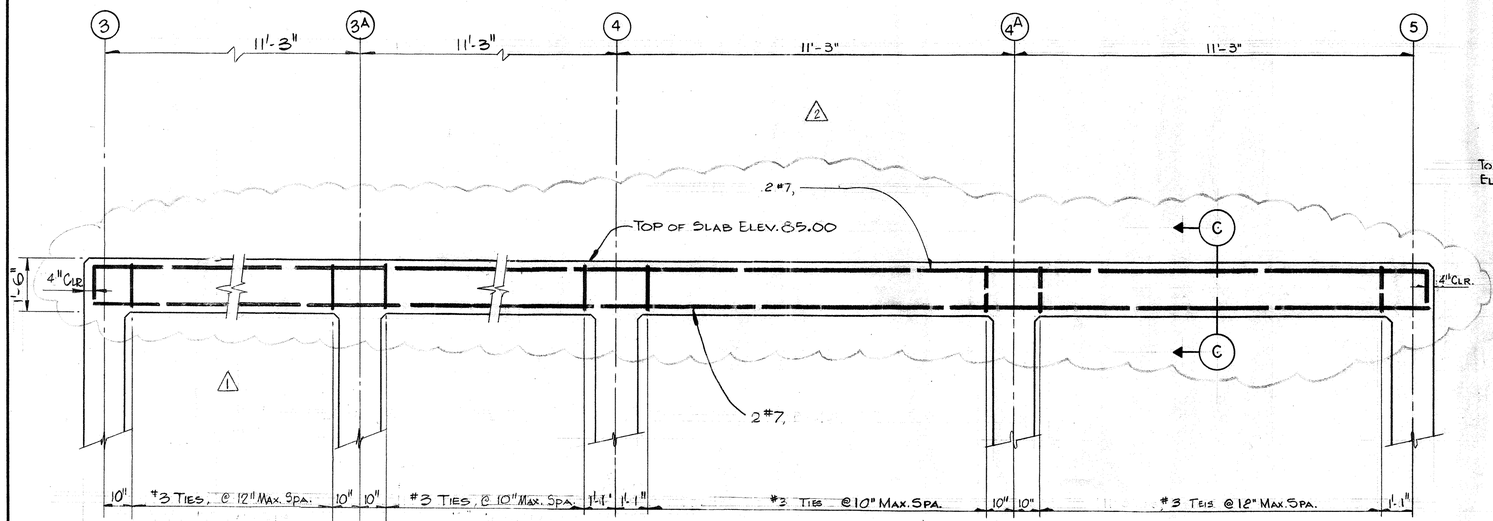

1 ELEVATION BEAM B-4

SCALE: 1/8"=1'-0"

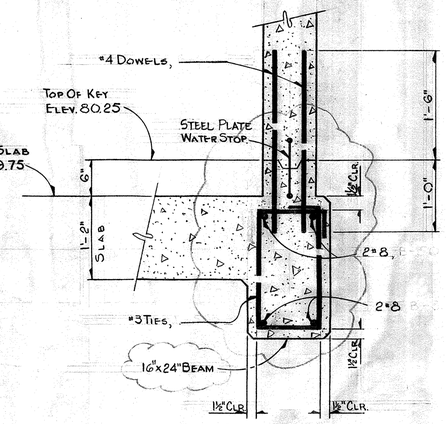

2 SECTION (A)

Scale: 1"=1'-0"

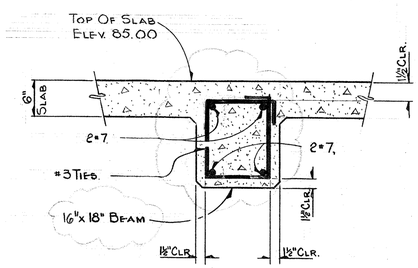

2 SECTION (B)

Scale: 1"=1'-0"

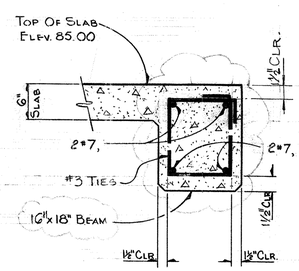

2 SECTION (C)

Scale: 1"=1'-0"

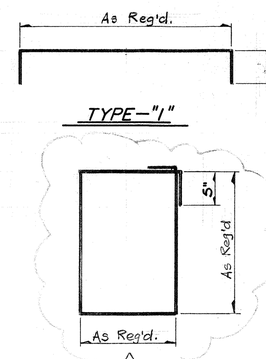

BENT BAR DETAILS

N.T.S.

REINFORCING STEEL SCHEDULE

FOR BEAMS

MARK	TYPE	SIZE	NO. REQ'D.	LENGTH PER BAR	BENT BAR DIM. 'A'	BENT BAR DIM. 'B'	
			BEAM B-6				
B-601	1	#7	2	22'-11"	20'-11"	1'-0"	
B-602	STR.	#7	2	20'-11"			
B-603	2	#3	20	4'-11"	1'-1½"	0'-11"	
			BEAM B 4				
B-401	1	#7	4	48'-2"	46'-2"	1'-0"	2
B-402	STR.	#7	4	46'-2"			
B-403	2	#3	88	4'-11"	1'-1½"	0'-11"	1
			BEAM B-5				
B-501	1	#8	2	34'-5"	32'-5"	1'-6"	
B-502	STR.	#8	2	31'-5"			1
B-503	2	#3	29	6'-1"	1'-8½"	0'-11"	
B-504	STR.	#4	36	2'-6"			

REV. No.	DATE	DESCRIPTION	DESIGN	CHECKED
2	11-78	Construction Revision Revised Beams From 14"x30" To 16"x30" And Changed Type 2 Bent Bar Detail Deleted Bar Schedule	J.L.R.	H.J.K.
1	2-25-77	BEAM B-4 EXTENDED SCHEDULE REV'D.	J.C.S.	S.R.S.

STATE OF TEXAS — JAMES A. BINKLEY — 24232 — REGISTERED PROFESSIONAL ENGINEER

STATE OF TEXAS — PAUL R. HOLMES — 27638 — REGISTERED PROFESSIONAL ENGINEER

CITY OF HOUSTON
DEPARTMENT OF PUBLIC WORKS

ALMEDA SIMS SLUDGE DISPOSAL PLANT-1973

CONSTANT HEAD TANK
BEAMS 3, 4, & 5
SECTIONS & DETAILS

RECOMMENDED FOR APPROVAL:
BINKLEY & HOLMES, INC., CONSULTING ENGINEERS

APPROVED:
CHIEF ENGINEER
ASST. CHIEF ENGINEER
ASST. DIRECTORS OF PUBLIC WORKS
DIRECTOR OF PUBLIC WORKS

DESIGNED BY: V. JAFRI
DRAWN BY: V. JAFRI
CHECKED BY: M. P. J
SCALE: AS SHOWN
DATE: DEC. 1973
SHEET 63 OF 200 SHEETS
DRAWING NO. 18045

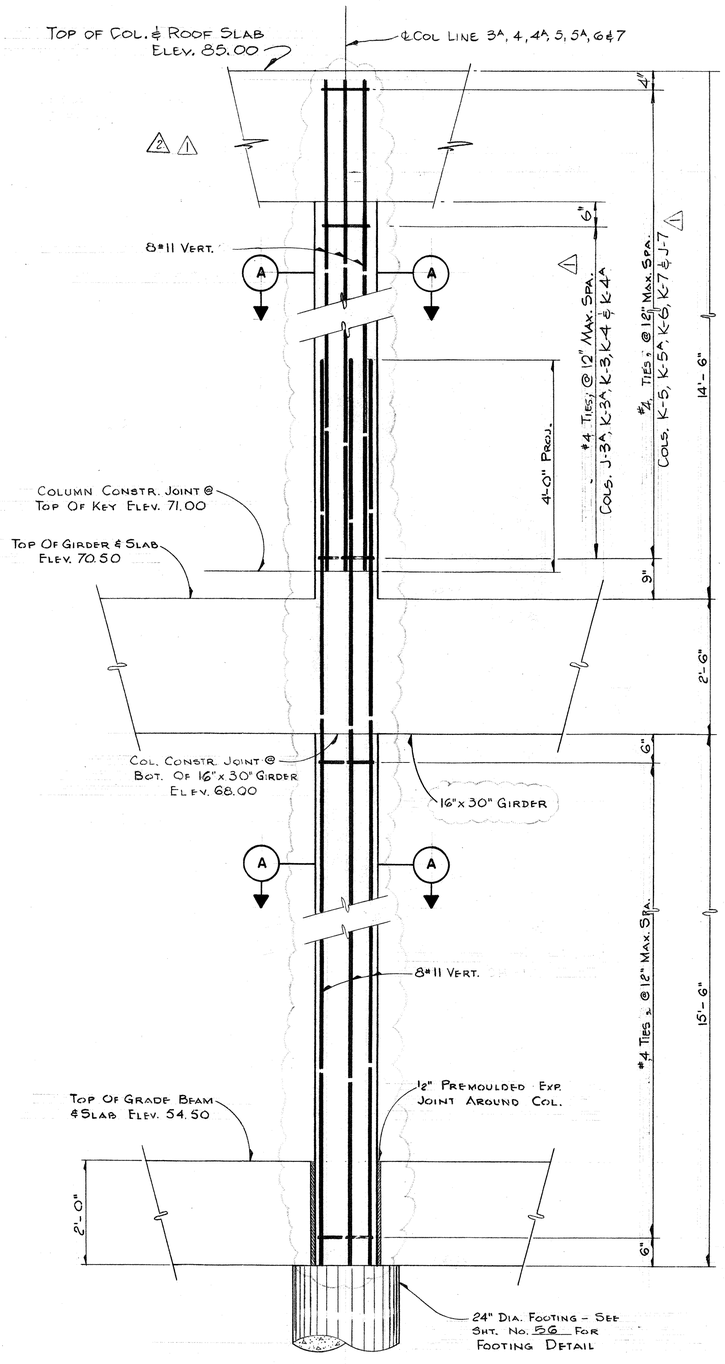

ELEVATION AT COLUMNS J-3A, K-3, K-3A, K-4, K-4A, K-5, K-5A, K-6, J-7 & K-7

SCALE: 3/4" = 1'-0"

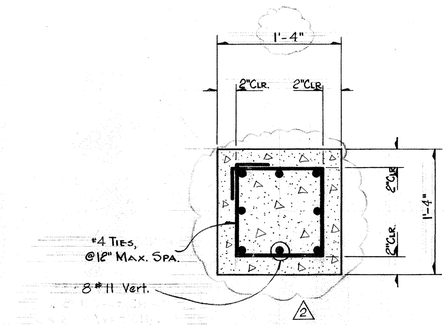

SECTION — (A)

SCALE: 1½"=1'-0"

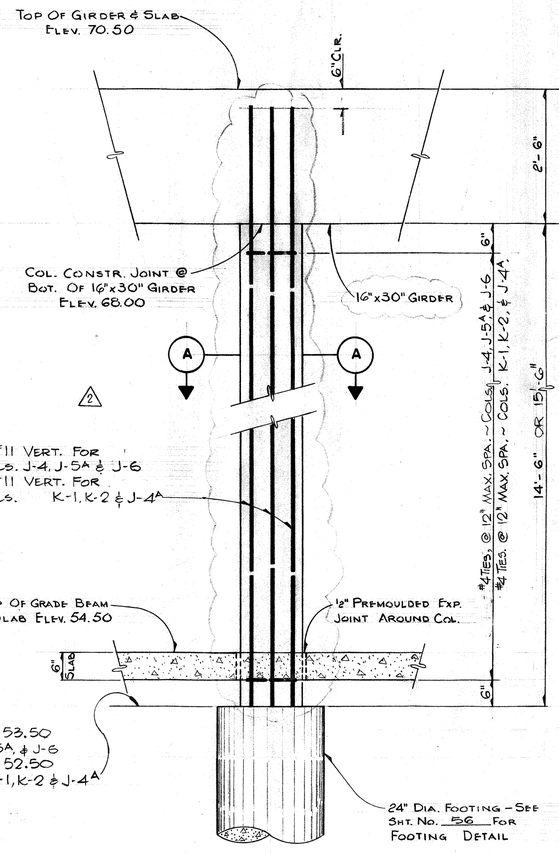

ELEVATION AT COLUMNS J-4, J-4A, J-5A, & J-6

SCALE 3/4" = 1'-0"

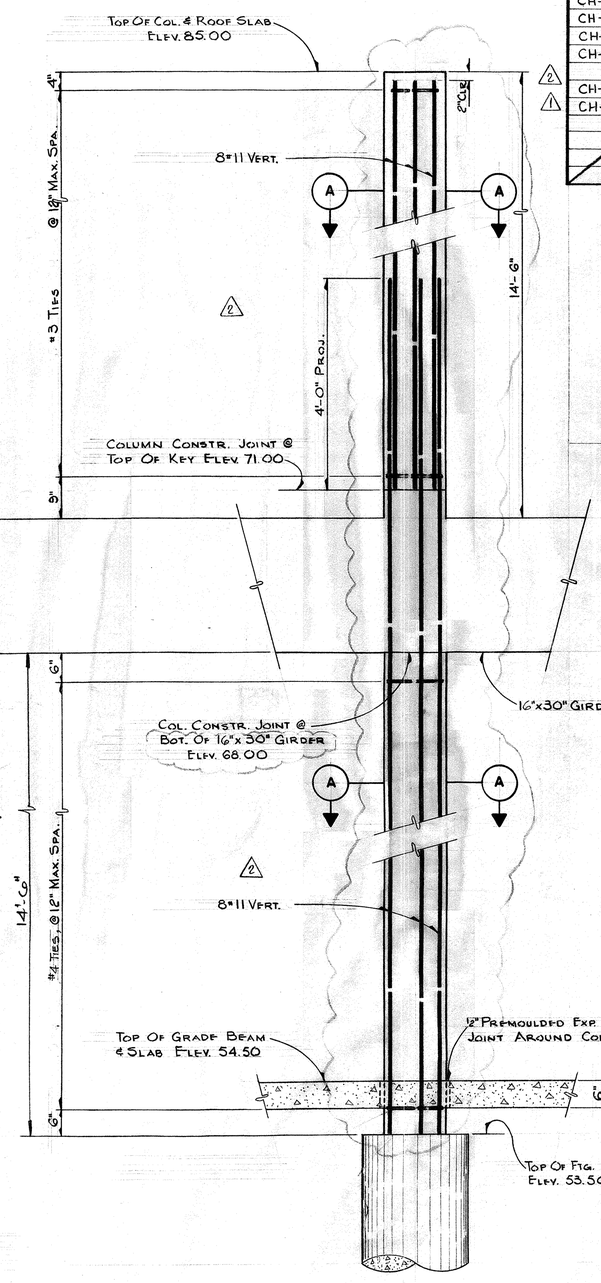

ELEVATION AT COLUMN J-5.

SCALE: 3/4"= 1'-0"

REINFORCING STEEL SCHEDULE FOR COLUMNS

MARK	TYPE	SIZE	No. REQD.	LENGTH PER BAR	BENT BAR DIM. "A"	BENT BAR DIM. "B"
CH-1	STR.	#11	80	22'-6"		
CH-2	STR.	#11	80	18'-10"		
CH-3	STR.	#11	24	16'-10"		
CH-4	STR.	#11	8	21'-6"		
CH-5	STR.	#11	8	13'-10"		
CH-6	1	#3	418	4'-0"	0'-10"	0'-10"
CH-7	STR.	#11	24	17'-10"		

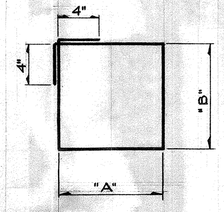

TYPE — "1" BENT BAR DETAIL

N.T.S.

REV. No.	DATE	DESCRIPTION	DESIGN	CHECKED
2	11-78	Construction Revision Revised Column & Girder Dimension From 14'-7½" to 14'-6" Delete Bar Schedule	J.L.R.	H.J.K.
1	2-28-77	COL. ELEVS. REV'D.- COLS K-1, K-2 & K-3 ADDED SCHEDULE REV'D	J.C.S.	S.R.S.

CITY OF HOUSTON
DEPARTMENT OF PUBLIC WORKS

ALMEDA–SIMS SLUDGE DISPOSAL PLANT–1973

CONSTANT HEAD TANK COLUMN DETAILS

RECOMMENDED FOR APPROVAL:
BINKLEY & HOLMES, INC., CONSULTING ENGINEERS

APPROVED:
Walter Williams
CHIEF ENGINEER — ASST. CHIEF ENGINEER
ASST. DIRECTORS OF PUBLIC WORKS
DIRECTOR OF PUBLIC WORKS

DESIGNED BY: V. Jatri
DRAWN BY: V. Jatri
CHECKED BY: M. P. J
SCALE: As Shown
DATE: DEC. 1973
SHEET 64 OF 200 SHEETS
DRAWING NO. 18045

56

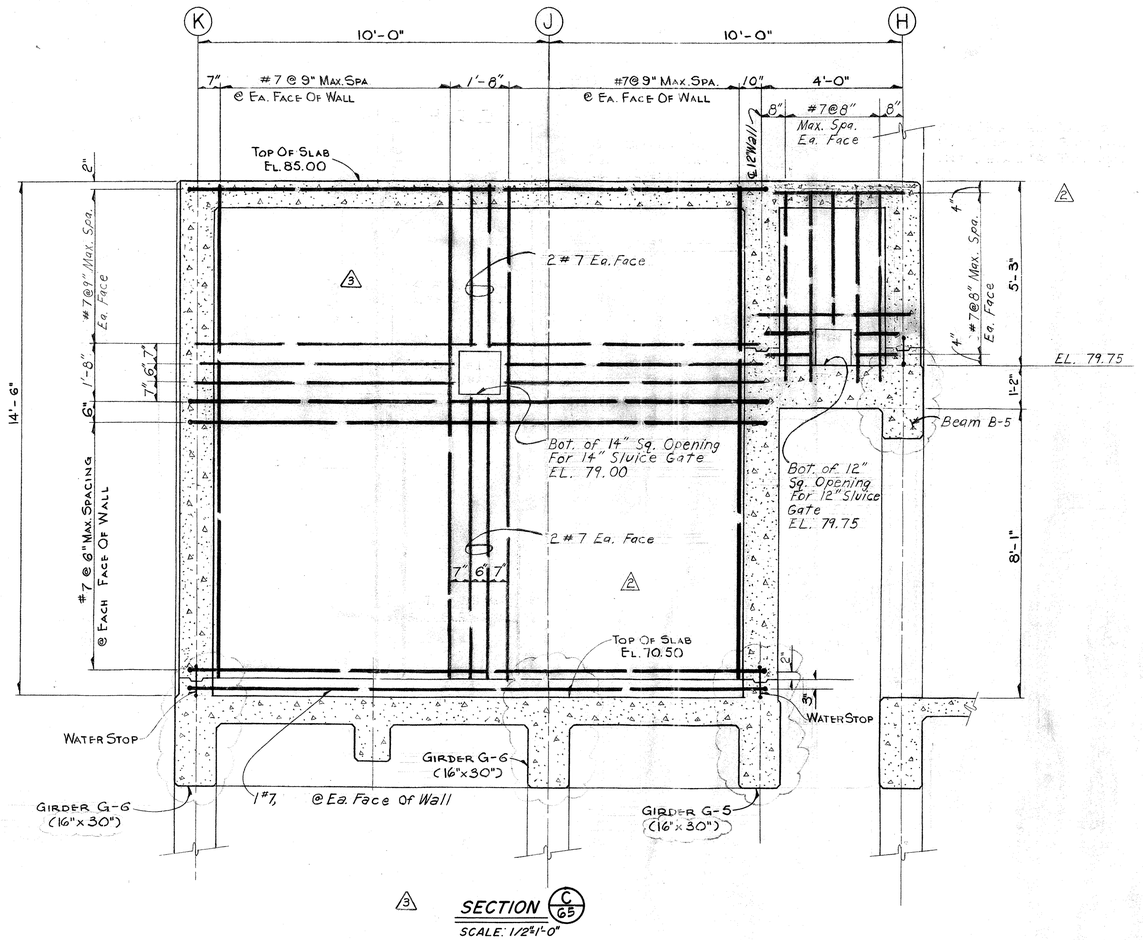

3 SECTION C/G5

SCALE: 1/2"=1'-0"

REINFORCING STEEL SCHEDULE FOR WALL & BEAM						
MARK	TYPE	SIZE	NO. REQD.	LENGTH PER BAR	BENT BAR DIM. 'A'	'B'
BEAM B-3						
B-301	2	#9	8	24'-11"	20'-11"	2'-0"
B-302	STR.	#9	6	20'-11"		
B-303	3	#5	40	4'-11"	1'-1½"	0'-11"

2

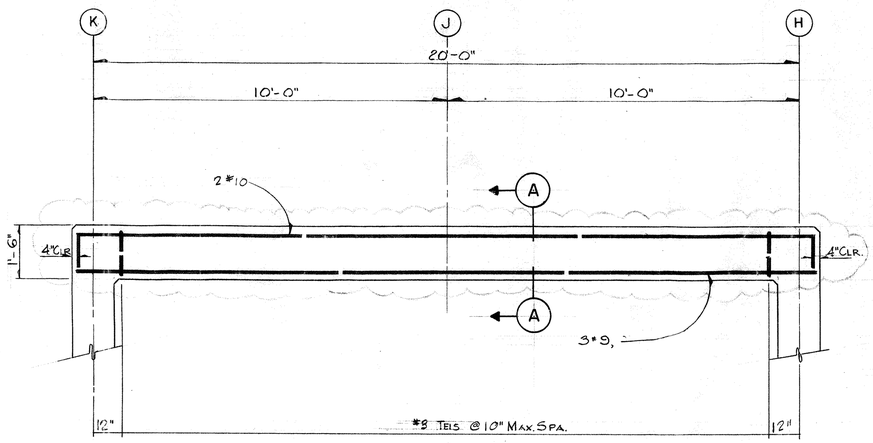

3 ELEVATION BEAM B-3.

SCALE: 1/2"=1'-0"

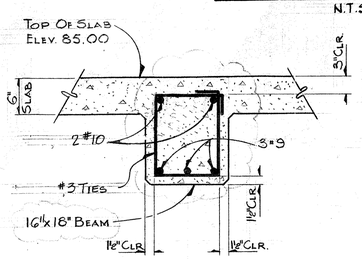

3 SECTION— A

SCALE: 1"=1'-0"

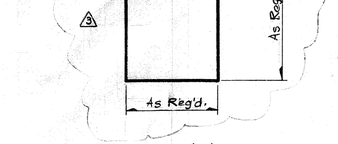

BENT BAR DETAILS

N.T.S

STATE OF TEXAS
JAMES A. BINKLEY
24282
REGISTERED
PROFESSIONAL ENGINEER

STATE OF TEXAS
PAUL R. HOLMES
27638
REGISTERED
PROFESSIONAL ENGINEER

CITY OF HOUSTON
DEPARTMENT OF PUBLIC WORKS

ALMEDA SIMS
SLUDGE DISPOSAL
PLANT—1973

CONSTANT HEAD TANK
SECTIONS AND
MISCELLANEOUS DETAILS

RECOMMENDED FOR APPROVAL:
BINKLEY & HOLMES, INC., CONSULTING ENGINEERS

APPROVED:
CHIEF ENGINEER — ASST. CHIEF ENGINEER
ASST. DIRECTORS OF PUBLIC WORKS
DIRECTOR OF PUBLIC WORKS

DESIGNED BY: V. Jafri
DRAWN BY: V. Jafri
CHECKED BY: M. P. J.
SCALE: As Shown
DATE: DEC 1973
SHEET 65 OF 200 SHEETS
DRAWING NO. 18045

REV. No	DATE	DESCRIPTION	DESIGN	CHECKED
3	11-78	CONSTRUCTION REVISION REVISED GIRDER & BEAM DIMENSION FROM 14" TO 16" AND CHANGED TYPE "3" BENT BAR DETAIL DELETED BAR SCHEDULE	J.L.R.	H.J.K.
2	6-77	REMOVE STOP LOGS ADD 14" & 12" GATES	J.C.S	K.R.L.
1	3-77	CONSTRUCTION JOINT DETAIL REMOVED	J.C.S.	S.R.S.

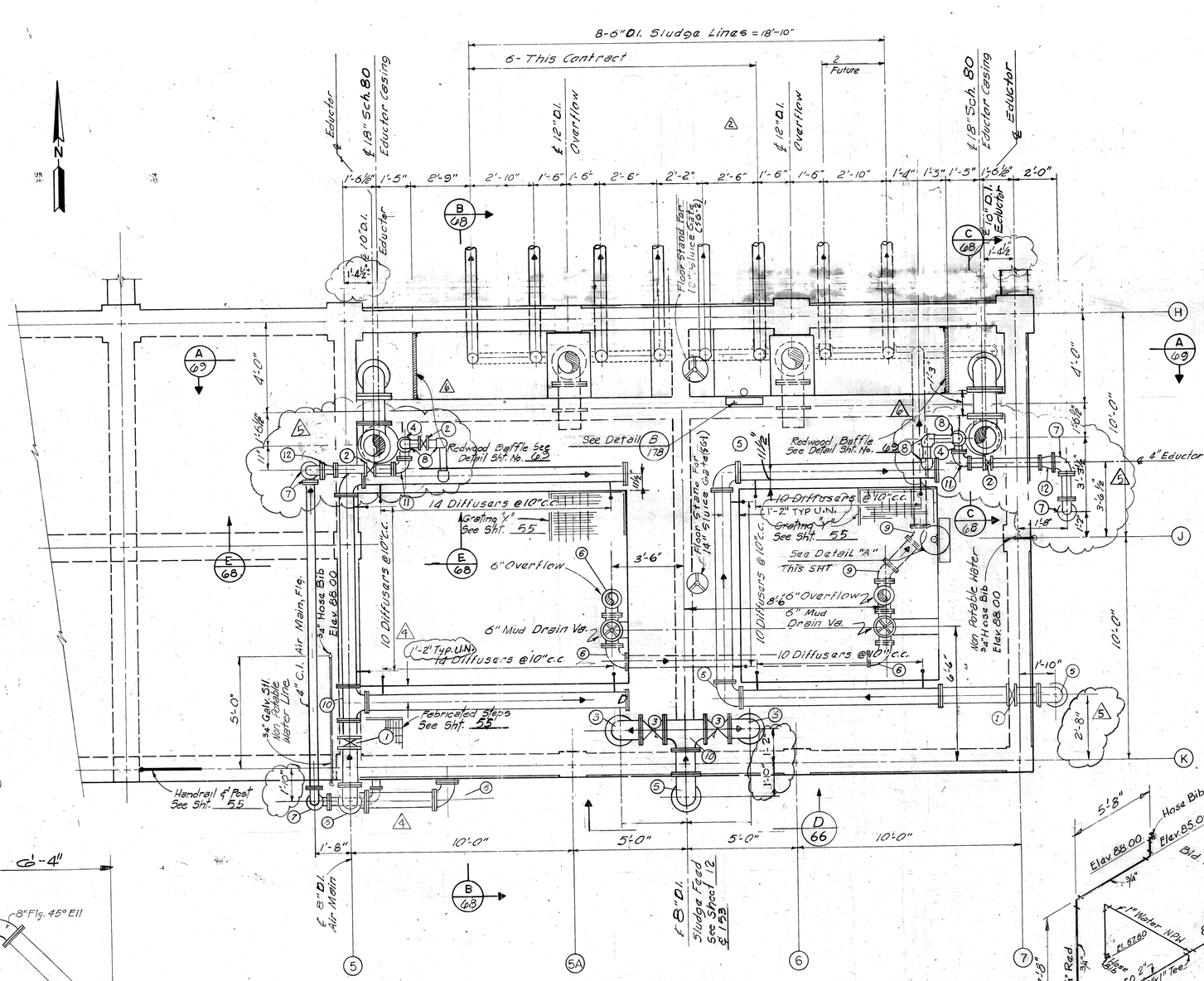

SECTION D/66

PLAN
Scale: 3/16"=1'-0"

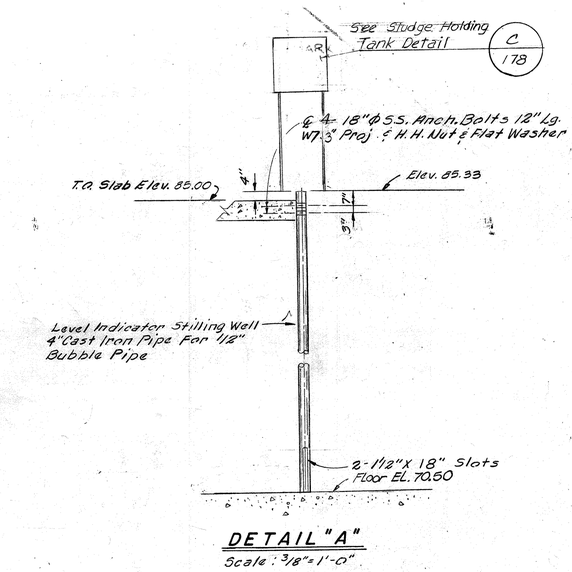

DETAIL "A"
Scale: 3/8"=1'-0"

FITTING AND VALVE SCHEDULE	
ITEM NO.	DESCRIPTION
1	8" Butterfly Valve (Water Type)
2	3" Butterfly Valve (Water Type)
3	8" Eccentric Plug Valve
4	3" C.I. Tee Flg.
5	8" D.I. 90° Bend, Flg.
6	6" D.I. 90° Bend, Flg.
7	4" C.I. 90° Bend, Flg.
8	3" GALV. 90° Bend, Screwed
9	6" D.I. 45° Bend, Flg.
10	8" D.I. Tee, Flg.
11	3" C.I. 90° Bend Flg
12	4"x3" Flg. Concentric Reducer

NOTE:
FOR SIZE AND LOCATION OF ELECTRICAL CONDUIT OPENINGS IN SLAB, SEE ELECTRICAL DWGS.

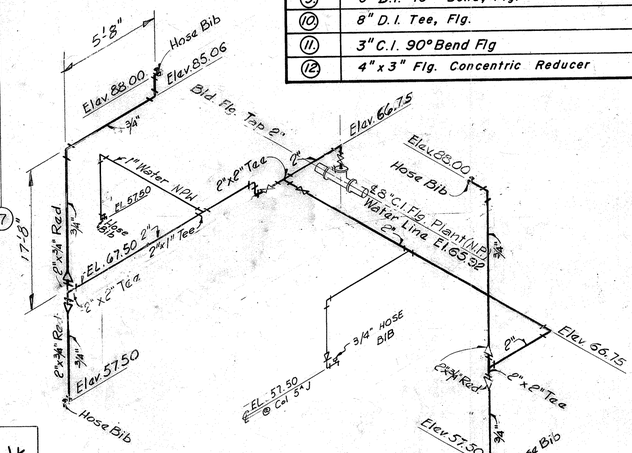

(NON POTABLE WATER)
PLANT WATER LINE SCHEMATIC
N.T.S.
For Location See Sheet No. 66 & 67

REV. NO.	DATE	DESCRIPTION	DESIGN	CHECKED
6	1-80	Construction Rev. Changed Location of Eductor Pipe and Eductor Air Line	WGW	H.J.K.
5	5-79	CONSTRUCTION REVISION Rev. Piping To Clear Siding Set Position Of Air Header	WGW	HJK
4	5-79	Change Piping As Per Addendum # Item 9.00	WGW	HJK
3	11-78	Permit Revisions Indicated That Plant Water System Is Non Potable	H.J.K.	K.R.L.
2	6-77	Rev. Sect. 'b' Rev. Piping, Add Sluice Gates Remove Telescoping Valves	J.C.S	K.R.L
1	3-77	Add Sect. D- Rev. Piping Remove Elec. Telescoping Valve Oper. Add Fl. Stand	J.C. "	S.R.S.

CITY OF HOUSTON
DEPARTMENT OF PUBLIC WORKS

ALMEDA SIMS
SLUDGE DISPOSAL
PLANT - 1973

CONSTANT HEAD TANK
PIPING PLAN

RECOMMENDED FOR APPROVAL:
BINKLEY & HOLMES, INC., CONSULTING ENGINEERS

APPROVED:
CHIEF ENGINEER — ASST. CHIEF ENGINEER
ASST. DIRECTORS OF PUBLIC WORKS
DIRECTOR OF PUBLIC WORKS

DESIGNED BY: M. B. J.
DRAWN BY: T. YRIGOYEN, I. GONZALEZ
CHECKED BY: M B J.
SCALE: AS NOTED
DATE: DEC. 1973
SHEET 66 OF 200 SHEETS
DRAWING NO. 18045

FITTING AND VALVE SCHEDULE

ITEM NO.	DESCRIPTION
1.	10" Water Butterfly Valve W/ Chain Operator
2.	10" Check Waffer Valve
3.	4" Non-Vibrating Relief Valve
4.	4" C.I. 90° Bend, Flg.
5.	12" x8" D.I. Flg. Red.
6.	4" C.I. Tee, Flg.
7.	12" D.I. Tee, Flg.
8.	12" x10" Flg. Concentric Reducer
9	4" Water Butterfly Valve With Chain Operator
10.	Expansion Joint
11.	4" C.I. 90° Bend, Screwed
12.	4" x 1'-2" (Approx.) C.I. Pipe, Screwed
13.	4" C.I. Pipe, Flg. x Screwed

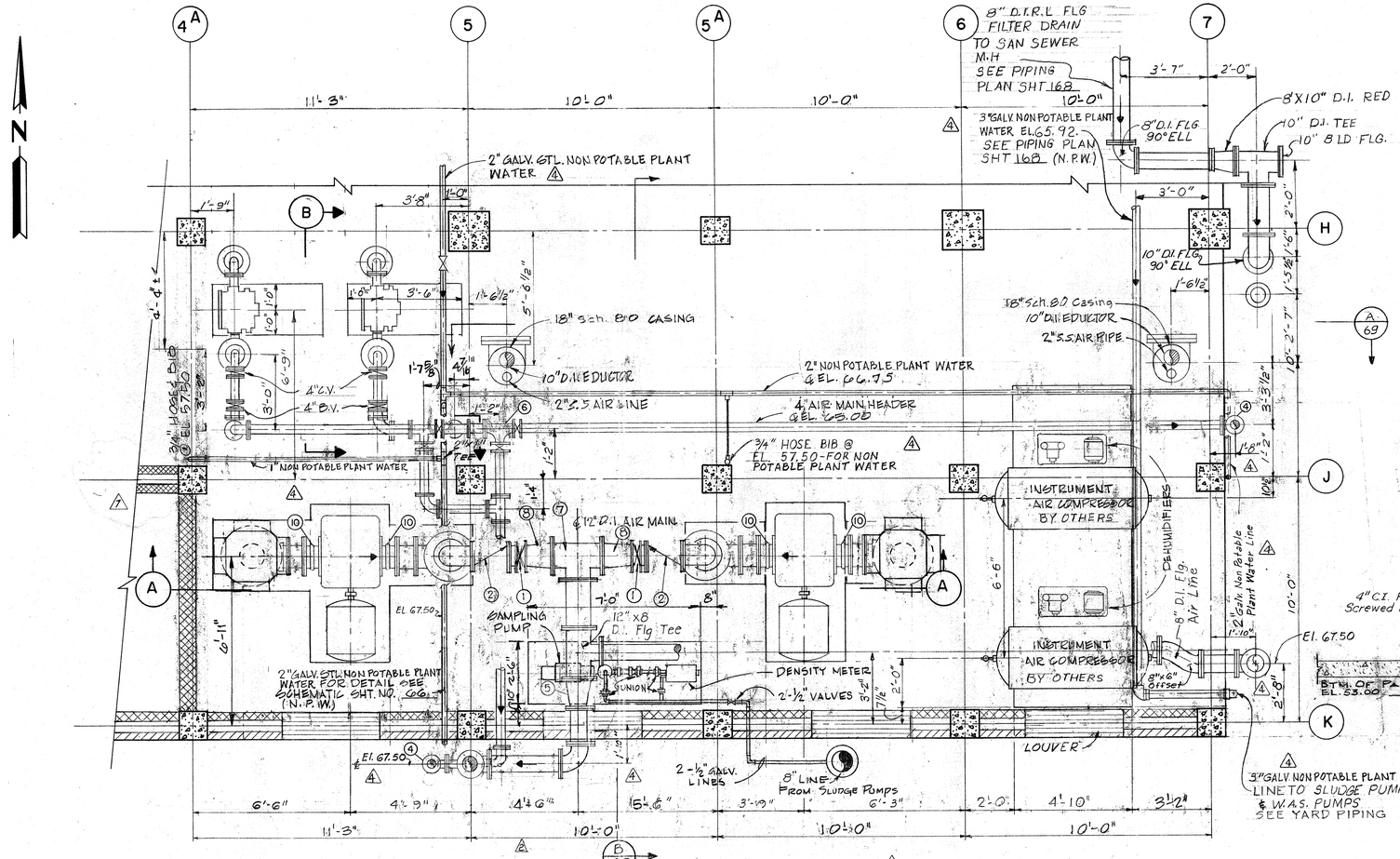

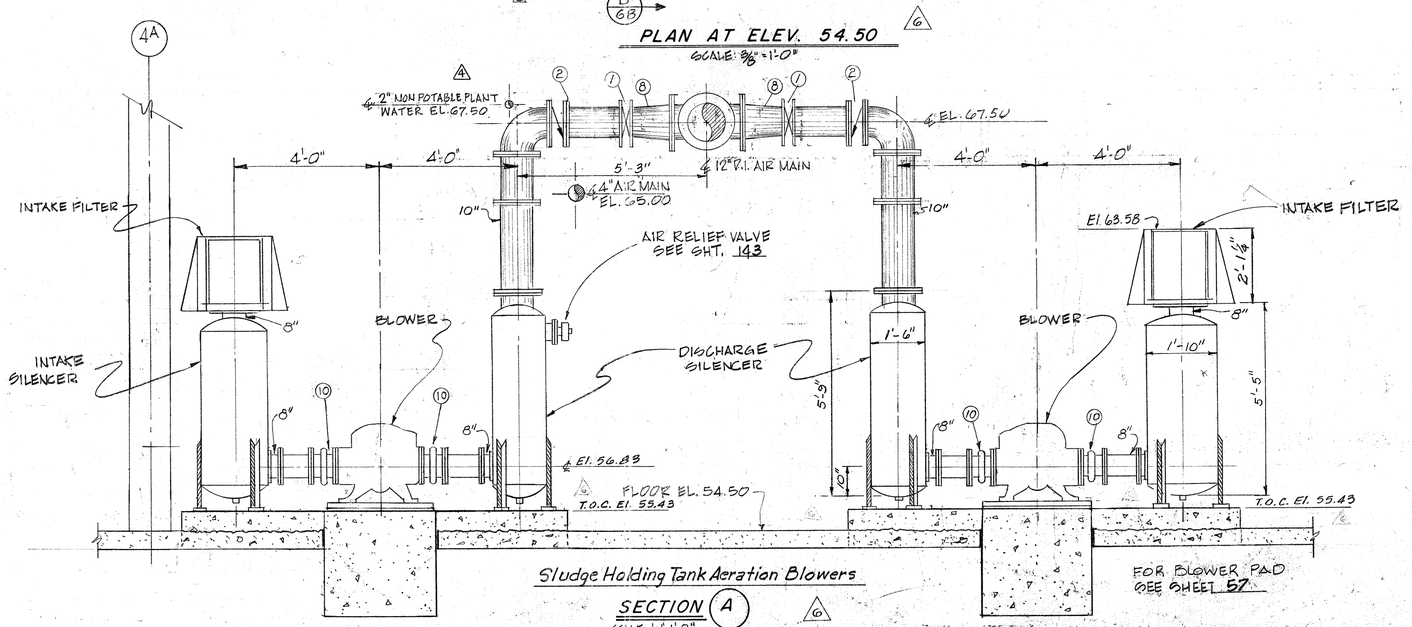

REV. NO.	DATE	DESCRIPTION	DESIGN	CHECK
7	10-79	Construction Revisions Modify Block Walls	D.D.C.	H.J.K.
6	6-79	Construction Revisions Rearranged Sludge Air Lift Blowers	A.C.B.	H.J.K.
5	11-78	Addenda Revision Added Multiple Valving System to Sludge Air Lift Blower Piping	H.J.K.	K.R.L.
4	5-79	Construction Revision Rev. 8" Air Line To Line Up With 8" Airmain At El. 85.83 Rev. Piping To Clear Siding	W.G.W.	H.J.K.
3	11-78	Permit Revisions Indicated That Plant Water System Is Non Potable	H.J.K.	K.R.L.
2	6-77	Rev. Air Piping	J.C.S.	K.R.L.
1	3-77	Rev. Piping Rev. Sludge Holding Tank Aeration Blowers	J.C.S.	S.R.S.

JAMES A. BINKLEY 24282 REGISTERED PROFESSIONAL ENGINEER

KENNETH R. HOLMES 27638 REGISTERED PROFESSIONAL ENGINEER

CITY OF HOUSTON
DEPARTMENT OF PUBLIC WORKS

ALMEDA SIMS SLUDGE DISPOSAL PLANT - 1973

CONSTANT HEAD TANK BLOWER ROOM AT ELEV. 54.50

RECOMMENDED FOR APPROVAL:
BINKLEY & HOLMES, INC., CONSULTING ENGINEERS

APPROVED:
Walter Williams
CHIEF ENGINEER — ASST. CHIEF ENGINEER
ASST. DIRECTORS OF PUBLIC WORKS
DIRECTOR OF PUBLIC WORKS

DESIGNED BY: M.B.J.
DRAWN BY: G. DORMAN
CHECKED BY: M. B.J.
SCALE: AS NOTED
DATE: DEC 1973
SHEET 67 OF 200 SHEETS
DRAWING NO. 18045

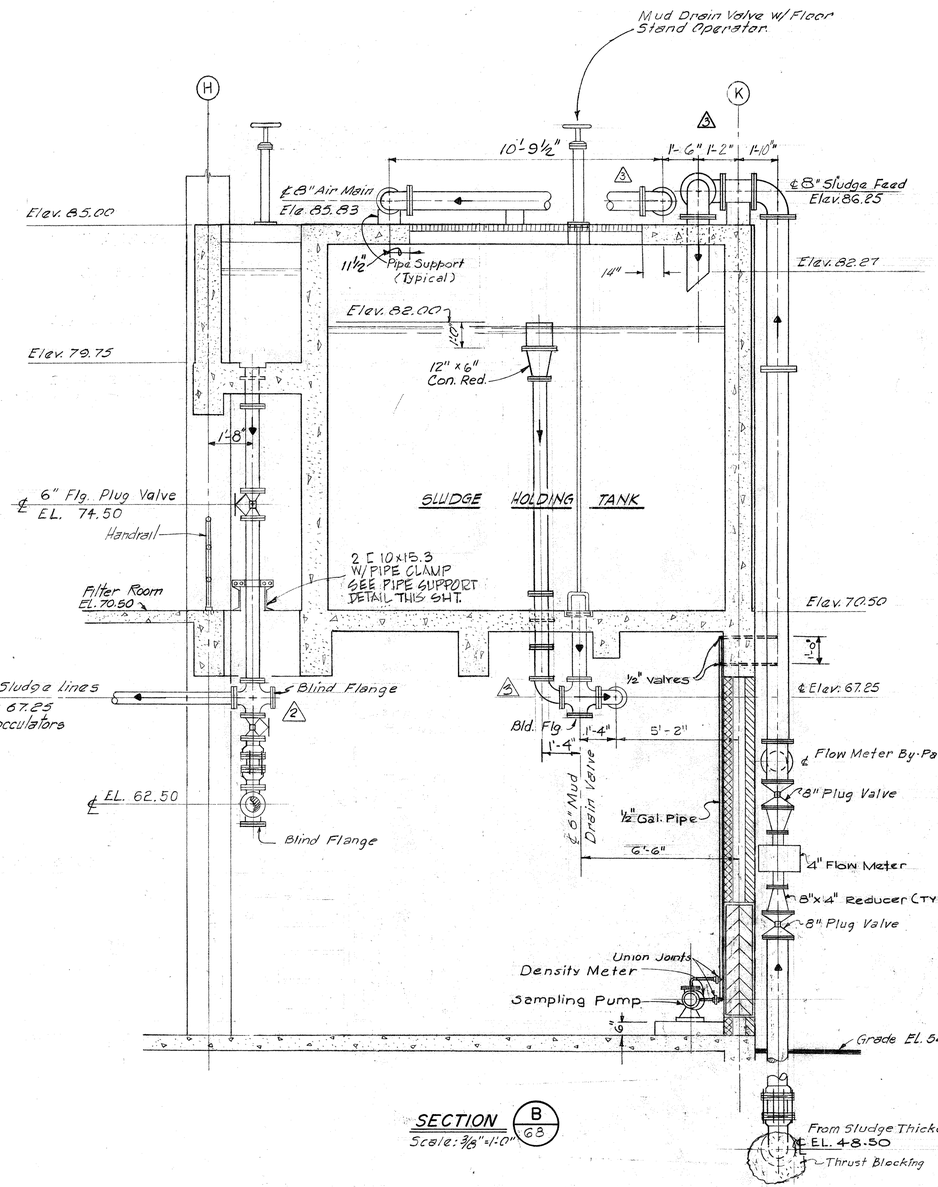

SECTION B / 68
Scale: 3/8" = 1'-0"

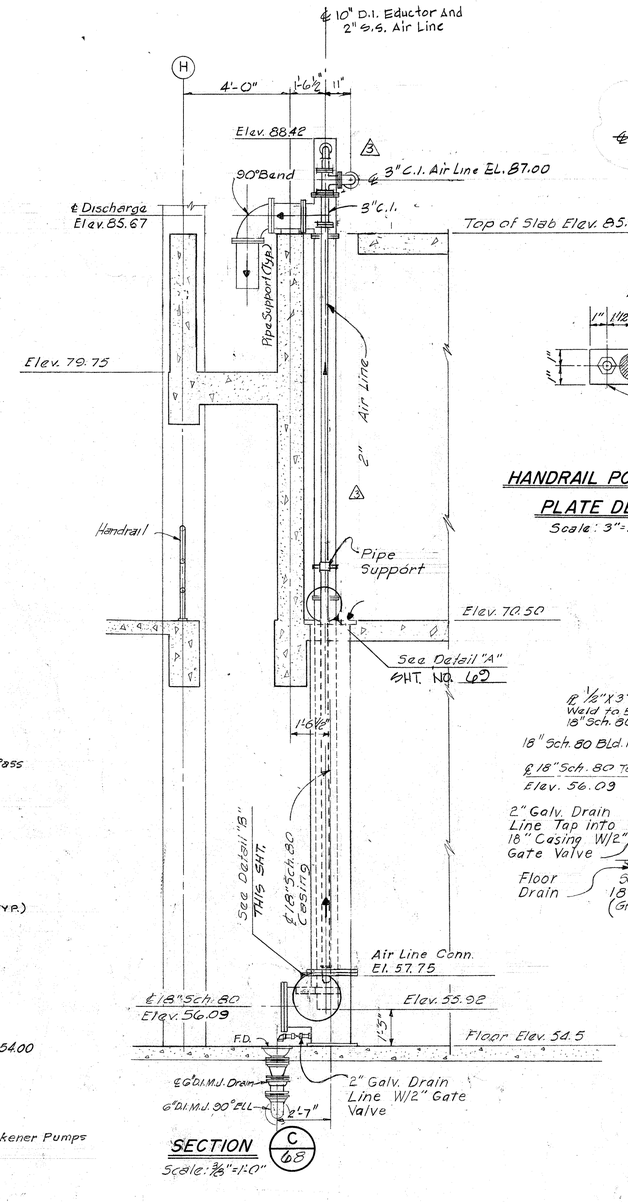

SECTION C / 68
Scale: 3/8" = 1'-0"

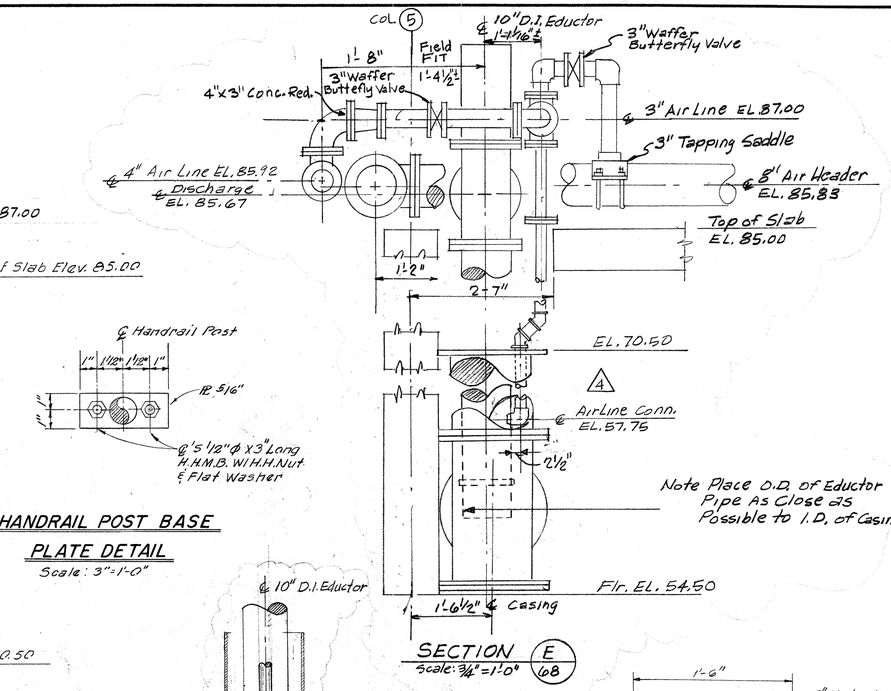

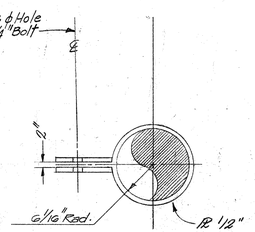

PIPE CLAMP DETAIL
N.T.S.

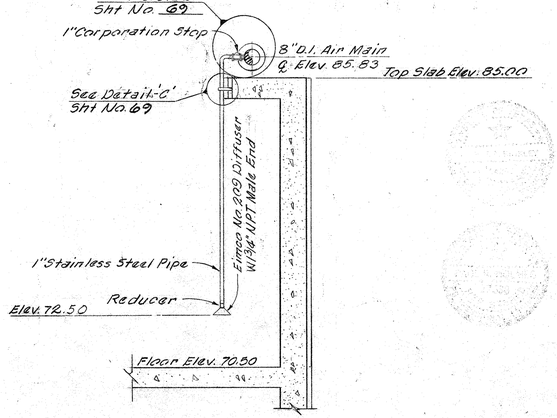

TYPICAL AIR DIFFUSER INSTALLATION
N.T.S.

REV. NO.	DATE	DESCRIPTION	DESIGN	CHECKED
4	1-80	Construction Revision Added Section "E" Revised Position of Eductor Pipe and Eductor Air Line	W.G.W.	H.J.K.
3	5/79	Construction Revision, Rev. 18" Sch. 80 Steel Tee Revised Piping To Clear Siding Set Air Header 3' Revised Position of Drain Valve and Overflow to Clear Beam	W.G.W.	H.J.K.

REV. NO.	DATE	DESCRIPTION	DESIGN	CHECKED
2	10-78	Addendum Revision. Changed 6"ø Tee To 6"ø Cross	H.J.K.	K.R.L.
1	3-77	Rev. Piping Remove Elec. Telescoping Valve Oper. Add Fl. Stand	J.C.S.	S.R.S.

CITY OF HOUSTON
DEPARTMENT OF PUBLIC WORKS

ALMEDA SIMS SLUDGE DISPOSAL PLANT - 1973

CONSTANT HEAD TANK AIR PIPING SECTIONS & DETAILS

RECOMMENDED FOR APPROVAL:
BINKLEY & HOLMES, INC., CONSULTING ENGINEERS

APPROVED:
CHIEF ENGINEER — ASST. CHIEF ENGINEER
ASST. DIRECTORS OF PUBLIC WORKS
DIRECTOR OF PUBLIC WORKS

DESIGNED BY: M.B.J.
DRAWN BY: E. YRIGOYEN, I. GONZALEZ
CHECKED BY: M.B.J.
SCALE: AS NOTED
DATE: DEC. 1973
SHEET 68 OF 200 SHEETS
DRAWING NO. 12045

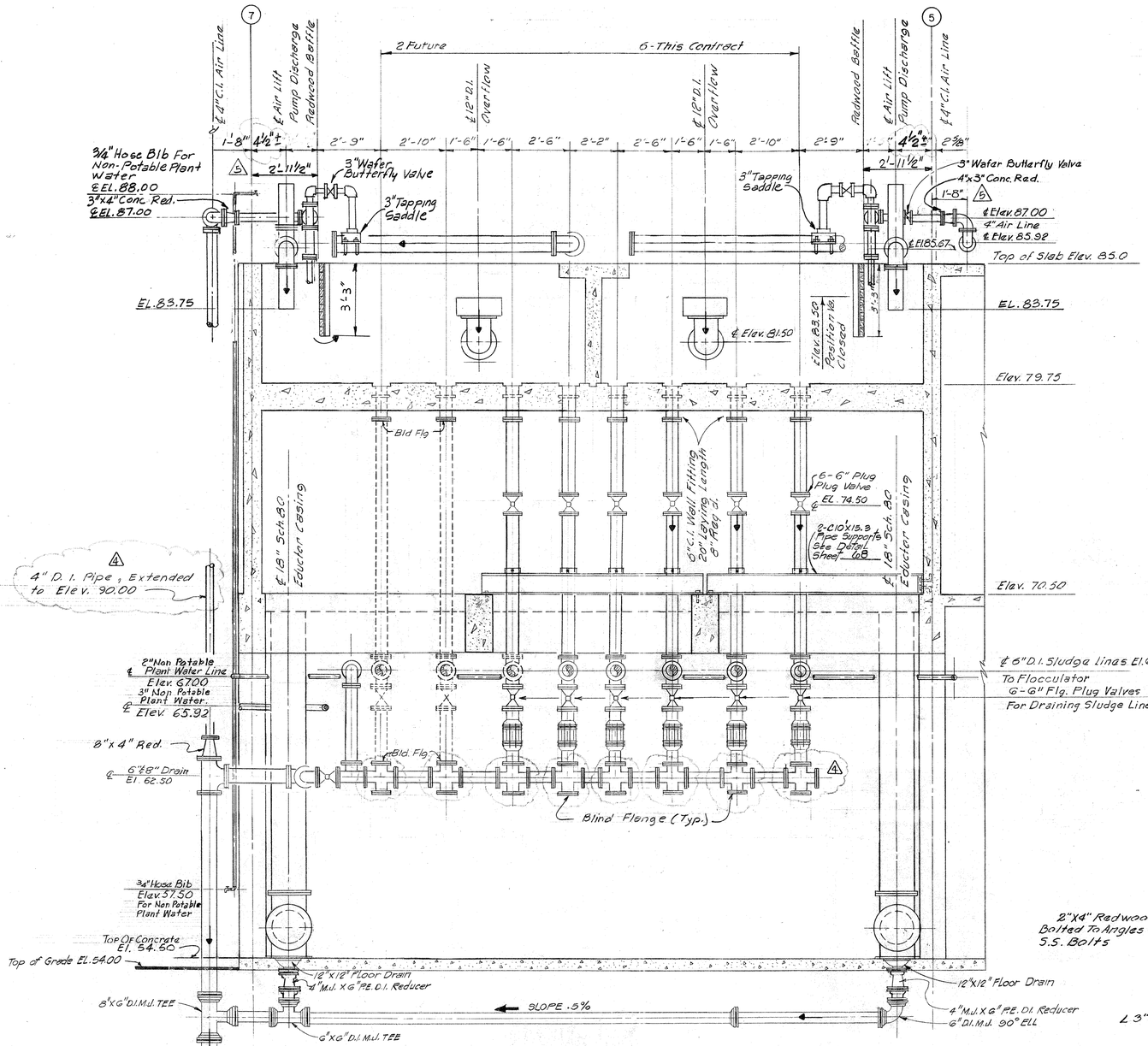

SECTION (A) 69
Scale: 3/8"=1'-0"

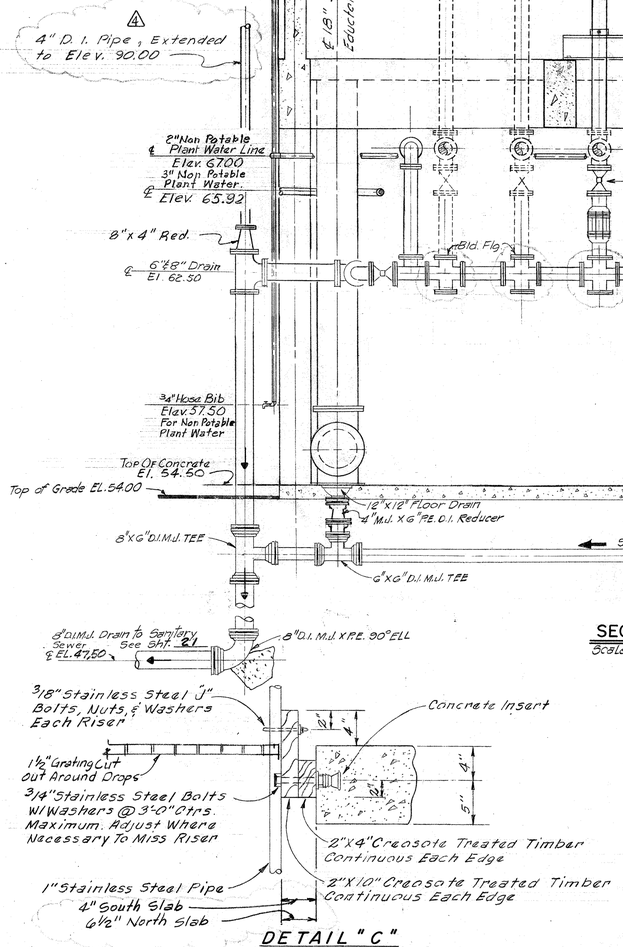

DETAIL "C"
N.T.S.

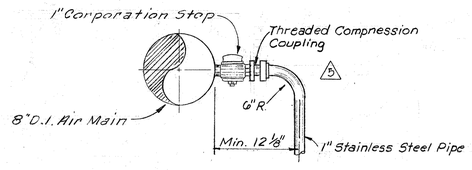

DETAIL "E"
N.T.S.

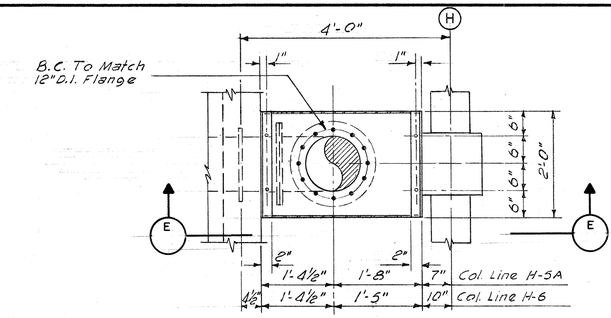

PLAN
Scale: 3/4"=1'-0"

12" D.I. Overflow Detail

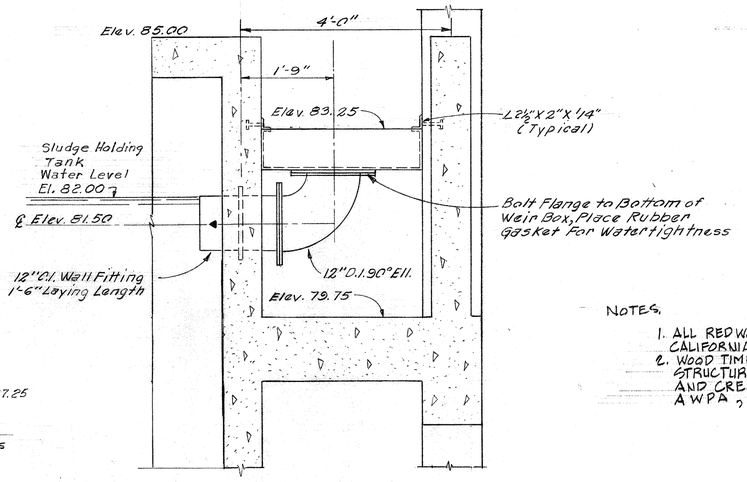

SECTION (E)
N.T.S.

NOTES.

1. ALL REDWOOD TO CLEAR HEART GRADE CALIFORNIA REDWOOD ASSOCIATION.
2. WOOD TIMBERS SHALL BE DENSE STRUCTURAL GRADE 72 K D S.P.I.B. AND CREOSOTE TREATED (12 P.C.F.) AWPA, C1-74.

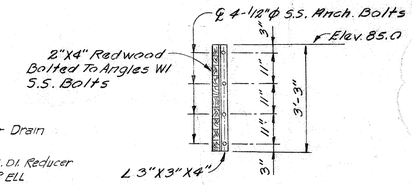

BAFFLE DETAIL
N.T.S.

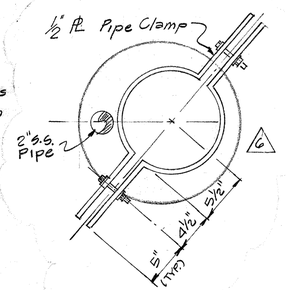

PLAN
Scale: 1½"=1'-0"

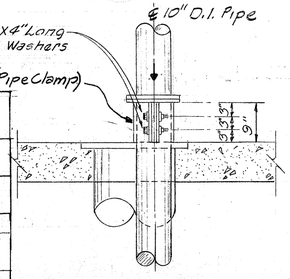

DETAIL "A"
Scale: 3/4"=1'-0"

REV NO.	DATE	DESCRIPTION	DESIGN	CHECKED
6	1-80	Construction Rev. changed Location of Eductor Pipe And Eductor Air Line.	JAW	H.J.K.
5	5-79	CONSTRUCTION REVISION Revised Piping To Clear Sideing Clarified Sparger Riser	W.G.W.	H.J.K.
4	11-78	Addenda Revision - Change 6" Tees To 6" Crosses Added 4" D.I. Vent	H.J.K.	K.R.L.
3	10-78	Permit Revision - Indicate Plant Water As Non Potable	H.J.K.	K.R.L.
2	6-77	Add Plug Valves Rev. Piping Remove Telescoping Valve	J.C.S.	K.R.L.
1	3-77	Rev. Piping Remove Elec. Telescoping Valve Oper. - Add Fl. Stand	J.C.S.	S.R.S.

STATE OF TEXAS — REGISTERED — JAMES W. HOLMES — 21039 — REGISTERED ENGINEER

CITY OF HOUSTON
DEPARTMENT OF PUBLIC WORKS

ALMEDA SIMS
SLUDGE DISPOSAL
PLANT — 1973

CONSTANT HEAD TANK
AIR PIPING SECTIONS & DETAILS

RECOMMENDED FOR APPROVAL:
BINKLEY & HOLMES, INC., CONSULTING ENGINEERS

APPROVED:
CHIEF ENGINEER — ASST. CHIEF ENGINEER
ASST. DIRECTORS OF PUBLIC WORKS
DIRECTOR OF PUBLIC WORKS

DESIGNED BY: M. O. J.
DRAWN BY: T. YRIGOYEN, I. GONZALEZ
CHECKED BY: M. B. J.
SCALE: AS NOTED
DATE: DEC. 1973
SHEET 69 OF 200 SHEETS
DRAWING NO. 18045

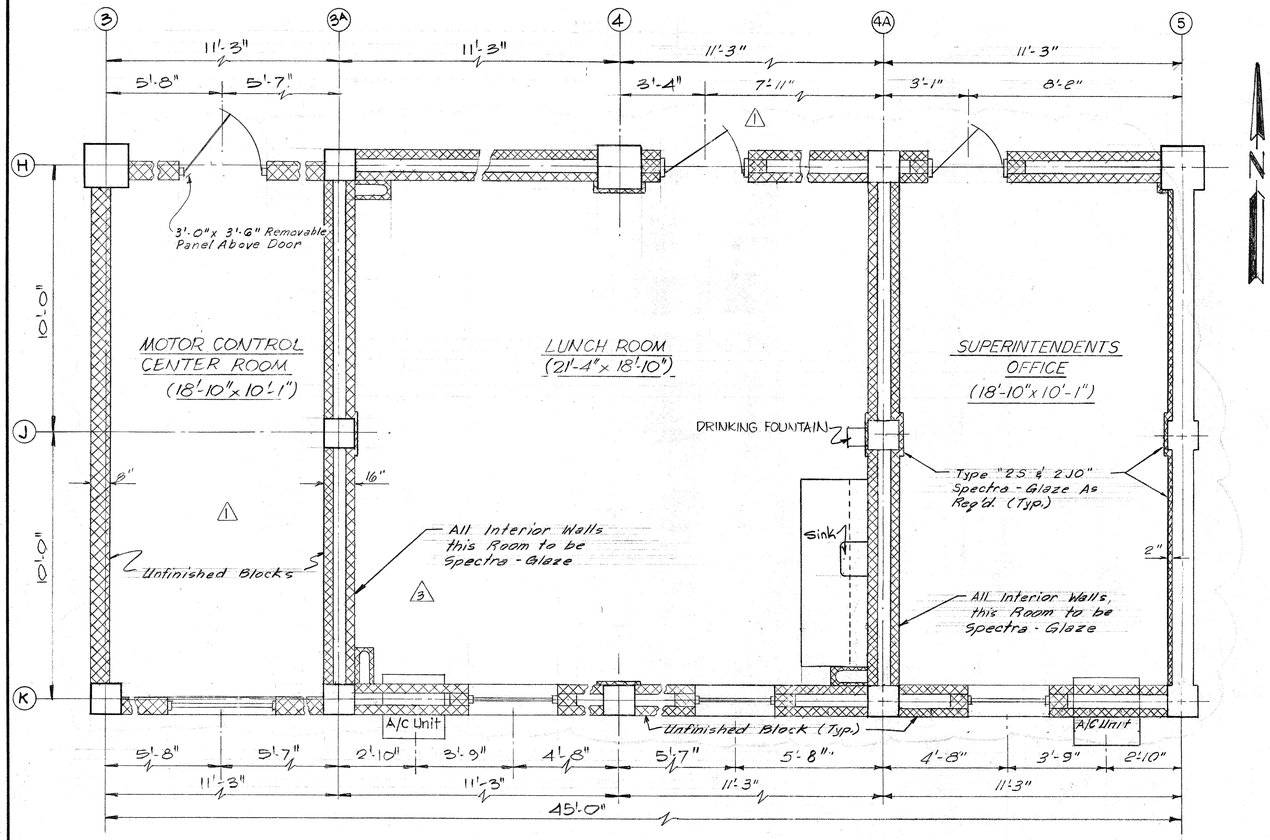

SECOND FLOOR PLAN—ELEV. 70.50

Scale: 3/8" = 1'-0"

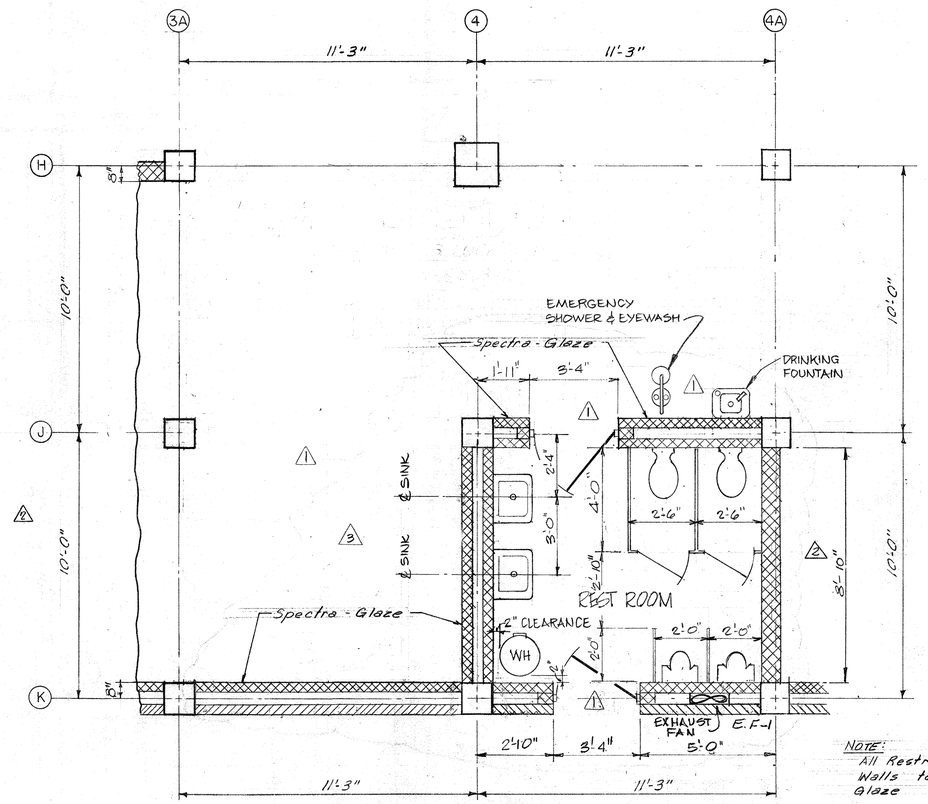

NOTE: All Restroom Interior Walls to be Spectra-Glaze

FIRST FLOOR PLAN—ELEV. 54.50

Scale: 3/8" = 1'-0"

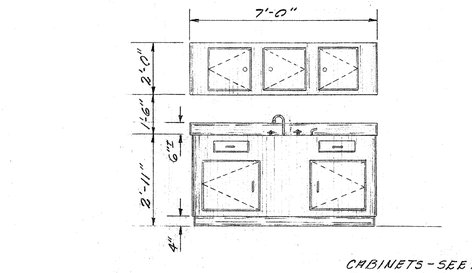

CABINETS - SEE FLOOR PLAN THIS SHEET

CABINET DETAIL

SCALE: 3/8" = 1'-0"

NOTE: ALL REDWOOD TO CLEAR HEART GRADE CALIFORNIA REDWOOD ASSOCIATION

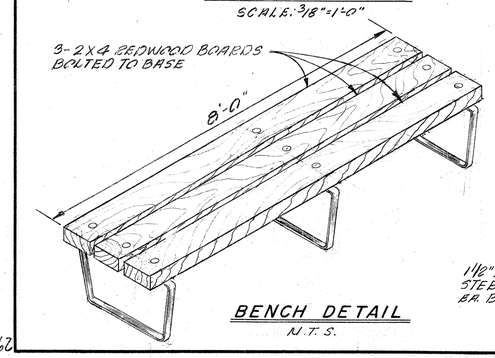

BENCH DETAIL

N.T.S.

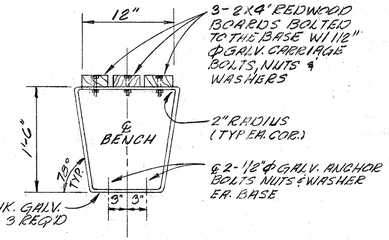

END VIEW

N.T.S.

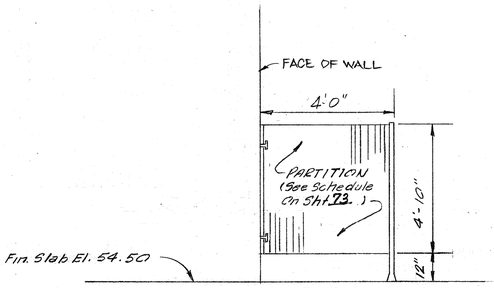

TYPICAL WATER CLOSET PARTITION DETAIL

SCALE: 3/8" = 1'-0"

REV. No	DATE	DESCRIPTION	DESIGN	CHECKED
3	10-79	Construction Revisions Modify Block Walls	D.O.C.	H.J.K.
2	11-78	Construction Revision Change 14" Col. to 16" Col.	J.L.R.	H.J.K.
1	3-4-77	M.C.C. ROOM & SHOWER ADDED, GENERAL REV'S	J.C.S.	S.R.S.

CITY OF HOUSTON
DEPARTMENT OF PUBLIC WORKS

ALMEDA-SIMS SLUDGE DISPOSAL PLANT-1973

SUPERINTENDENTS OFFICE LUNCH & REST ROOM PLAN & DETAILS

RECOMMENDED FOR APPROVAL:
BINKLEY & HOLMES, INC., CONSULTING ENGINEERS

APPROVED:
CHIEF ENGINEER — ASST. CHIEF ENGINEER
ASST. DIRECTORS OF PUBLIC WORKS
DIRECTOR OF PUBLIC WORKS

DESIGNED BY: M.P.J.
DRAWN BY: T. YRIGOYEN, I. GONZALEZ
CHECKED BY: M.P.J.
SCALE: AS NOTED
DATE: DEC. 1973
SHEET 70 OF 200 SHEETS
DRAWING NO. 18045

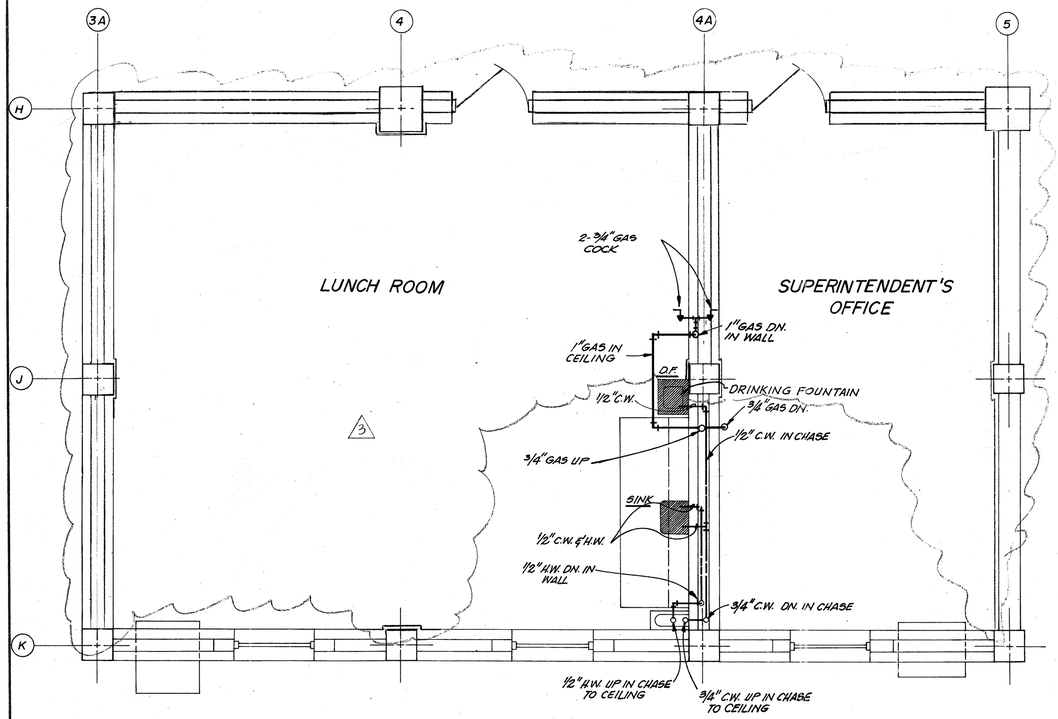

SECOND FLOOR PLAN EL. 70.50

SCALE: 3/16" = 1'-0"

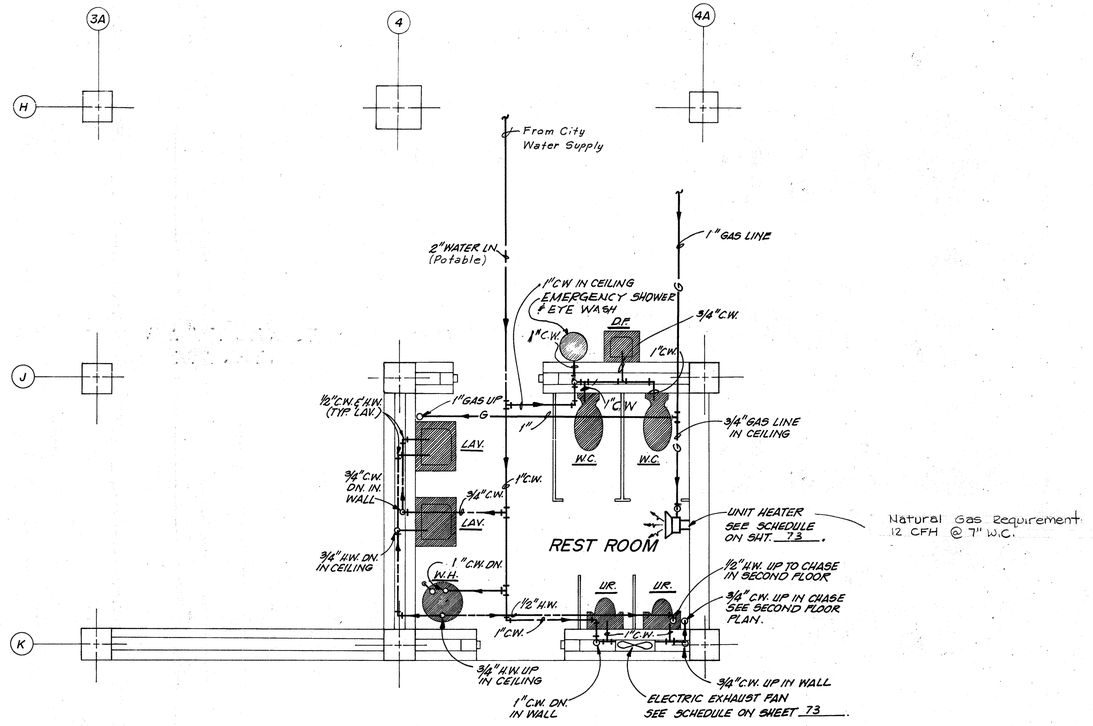

Natural Gas Requirement 12 CFH @ 7" W.C.

FIRST FLOOR PLAN EL. 54.50

SCALE: 3/16" = 1'-0"

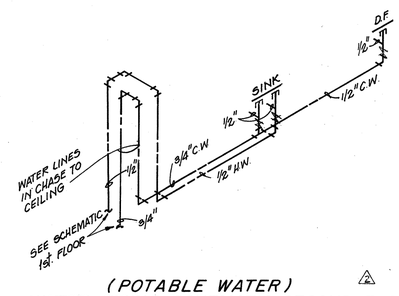

(POTABLE WATER) 2

WATER PIPING SCHEMATIC SECOND FLOOR

N.T.S.

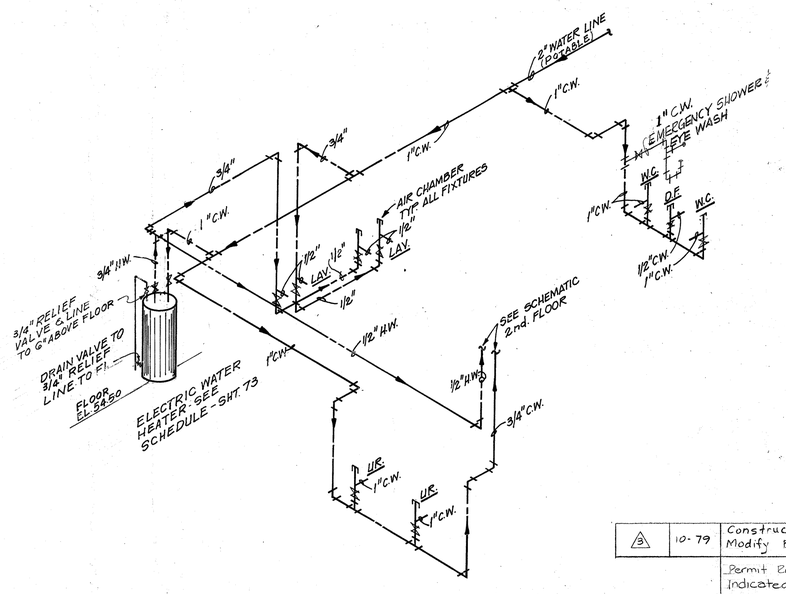

(POTABLE WATER) 2

WATER PIPING SCHEMATIC FIRST FLOOR

N.T.S.

REV. NO.	DATE	DESCRIPTION	DESIGN	CHECKED
3	10-79	Construction Revisions Modify Block Walls	D.D.C.	H.J.K.
		Permit Revisions Indicated that Water System is Potable. Added Drain Line, w/3/4" Relief and Drain Valves, to Water Heater Added Gas Requirement For Heater		
2	11-78		H.J.K.	K.R.L.
1	3-77	Rev. Plan & Schematics Remove Tanks & Pump	J.C.S.	S.R.S.

CITY OF HOUSTON
DEPARTMENT OF PUBLIC WORKS

ALMEDA-SIMS SLUDGE DISPOSAL PLANT—1973

LUNCH ROOM & REST ROOM

WATER PLUMBING PLAN

RECOMMENDED FOR APPROVAL:
BINKLEY & HOLMES, INC., CONSULTING ENGINEERS

APPROVED:
CHIEF ENGINEER — ASST. CHIEF ENGINEER

ASST. DIRECTORS OF PUBLIC WORKS
DIRECTOR OF PUBLIC WORKS

DESIGNED BY: P. ESPINOZA
DRAWN BY: D. HOGAN
CHECKED BY: M.B.J.
SCALE: AS SHOWN
DATE: DEC 1973
SHEET 72 OF 200 SHEETS
DRAWING NO. 13045

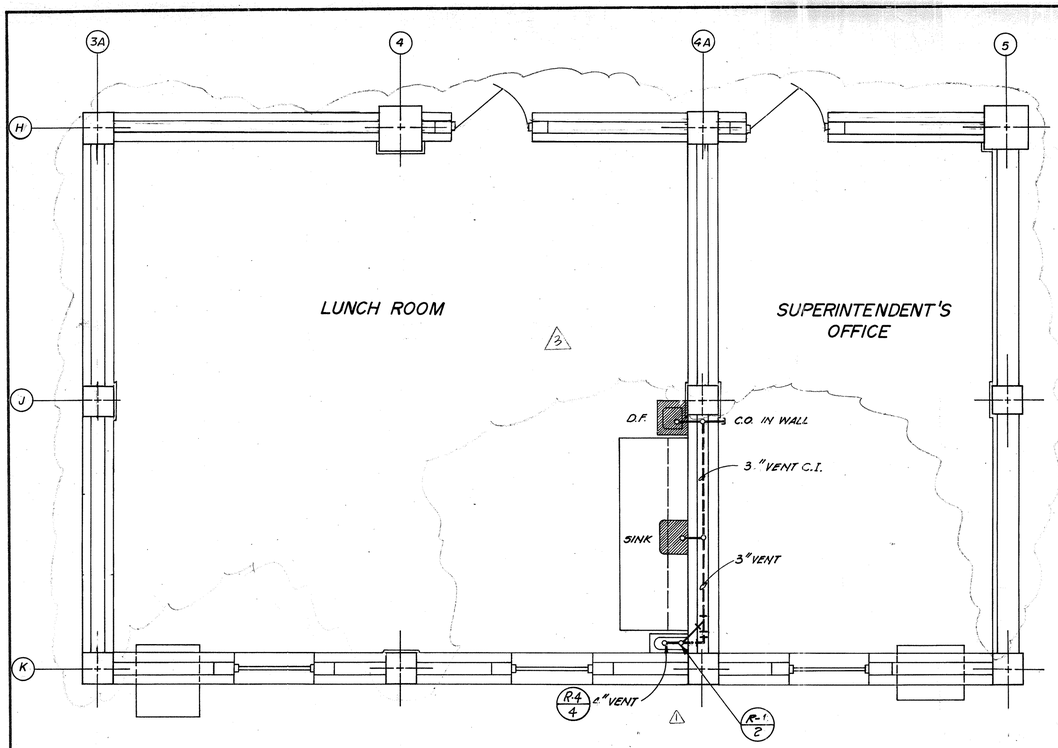

SECOND FLOOR PLAN EL.7050

SCALE: 3/8"=1'-0"

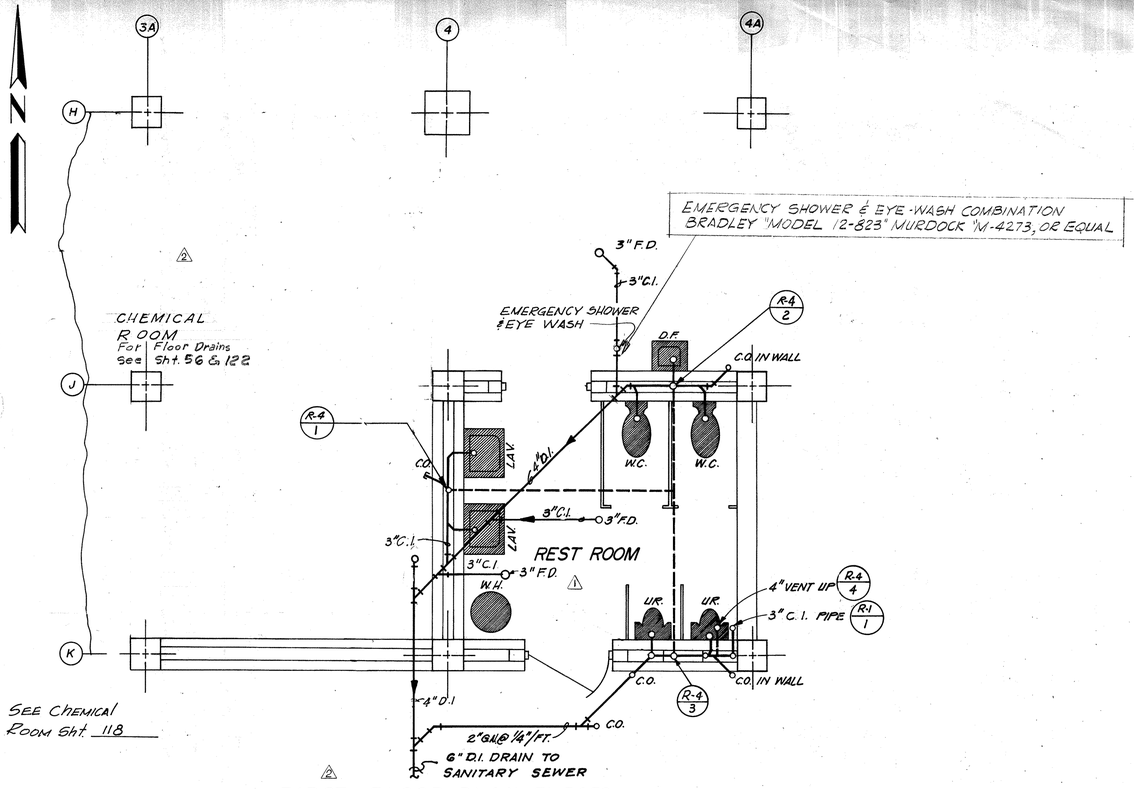

SEE CHEMICAL ROOM Sht. 118

FIRST FLOOR PLAN EL.5450

SCALE: 3/8"=1'-0"

PLUMBING SCHEDULE

FIXTURE	QTY.	DESCRIPTION
UNIT HEATER	1	"INFRA.-RED" (TEXAS INFRA.-RED RADIANT CO. INC. HOUSTON, TEX.) MODEL #ISI, AITKEN STRAIGHT SIDED 12,000 BTUH. CAP. TO BE INSTALLED ACCORDING TO THE MANUFACTURERS SPECIFICATIONS OR EQUAL.
HOSE BIBB	1	HOSE BIBBS INSIDE REST ROOM SHALL BE CHROME PLATED, BRASS W/LOCK SHIELD HANDLE; WADE, SMITH, JOSAM OR EQUAL.
WATER CLOSET (W.C.)	2	KOHLER MODEL # K-4460 COMPLETE W/SEAT MODEL K-4671-C, FLUSH VALVE; "SLOAN" MODEL # 143 YV ROYAL; AMERICAN STANDARD OR EQUAL.
URINAL (UR.)	2	KOHLER MODEL # K-4970-T, STANWELL VITREOUS CHINA HANGING BLOWOUT URINAL WITH JET, INTERNAL SPREADER WITH FLOW CONTROL, EXTENDED SHIELDS AND TRAP. PROVIDE FLUSH VALVES WITH VACUUM BREAKERS; "SLOAN" MODEL # 180-YV ROYAL; AMERICAN STANDARD OR EQUAL.
LAVATORY (LAV.)	2	KOHLER MODEL #K-2861-C HUDSON ACID-RESISTING ENAMELED CAST IRON W/ BACK 20"x18" PROVIDE FAUCET SET & 1/2" I.P.S. ANGLE SUPPLIES W/ STOPS & ANNEATED VERTICAL TUBE & 1" TRAP; AMERICAN STANDARD OR EQUAL.
DRINKING FOUNTAIN (D.F.)	2	HALSEY TAYLOR (MODEL #WT-8-A) KOHLER OR EQUAL.
SOAP DISPENSER	3	"AMERICAN DISPENSER CO." MODEL # PONDUM 72, (STAINLESS STEEL) KOHLER OR EQUAL.
WATER HEATER (W.H.)	1	DAY & NIGHT ELECTRIC W.H. MODEL #20 JUS-4 20 GAL. CAPACITY, 150 P.S.I. MAX. WORKING PRESSURE, 240 VOLTS (MAY BE USED ON 208 VOLT SYSTEMS AT REDUCED RECOVERY CAPACITY.) 1 PHASE, 2000 WATTS; SMITH EGGELHOF OR EQUAL.
SINK	1	"ELKAY" MODEL PACEMAKER/STARLITE # A.P.S.R.-2522-3 W/SINGLE LEVER FAUCET CONTROL, 10" SWING SPOUT W/SWIVEL AERATOR. PROVIDE "P" TRAP, 1/2" SUPPLIES, ALL BRASS CHROME PLATED W/STOPS, 1 1/2" DRAIN W/BASKET STRAINER; KOHLER OR EQUAL.
TOWEL DISPENSER (T.D.)	3	"FORT HOWARD" MODEL # 564, KOHLER OR EQUAL.
TOILET PARTITION	2	PARTITION SHALL BE TYPE F3 AS MANUFACTURED BY AMERICAN SANITARY PARTITION CORP, KOHLER OR EQUAL.
URINAL SCREEN	2	SCREEN SHALL BE TYPE 3, WALL HUNG, AS MANUFACTURED BY AMERICAN SANITARY PARTITION CORPORATION, KOHLER OR EQUAL.
EXHAUST FAN	1	"ACME" MODEL # FIGGG, 1/8 H.P. SIZE: 16", S.P.: 1/8", 115 V, 1 Ø, 60 HRTZ.; TRANE, HARTZELL OR EQUAL.
FLOOR DRAIN (F.D.)	3	CAST-IRON WITH INTEGRAL "P" TRAP, SEEPAGE FLANGE AND ADJUSTABLE NICKEL BRASS 5" DIA. STRAINER.
WATER HEATER VENT	1	GALV. DOUBLE WALL VENT, W/ JACK & CAP.

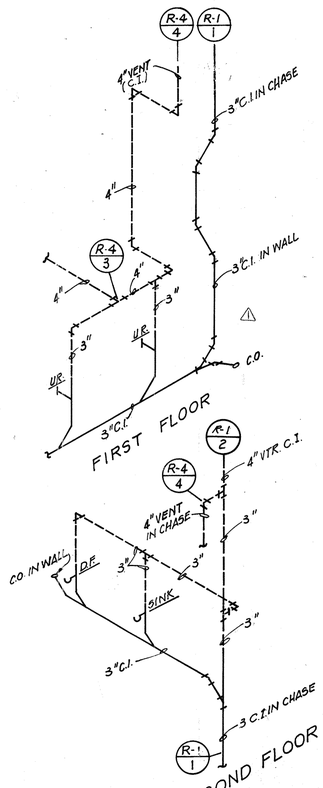

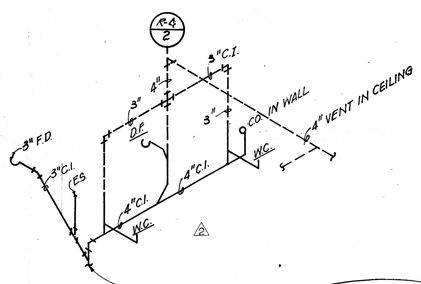

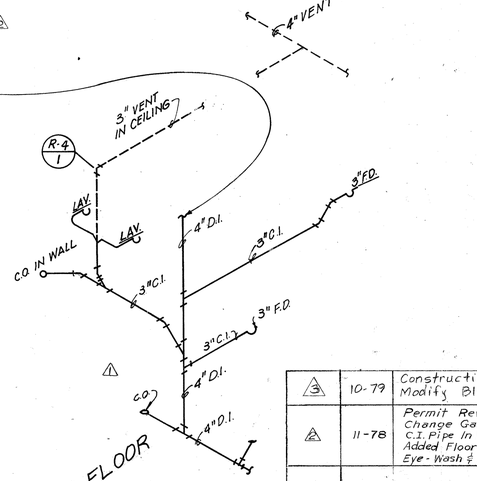

PLUMBING RISER SCHEMATICS

N.T.S.

REV NO.	DATE	DESCRIPTION	DESIGN	CHECKED
3	10-79	Construction Revisions Modify Block Walls	D.D.C.	H.J.K.
2	11-78	Permit Revision Change Galv. Pipe To C.I. Pipe In Waste Line Added Floor Drain For Eye-Wash & Water Heater	H.J.K.	K.R.L.
1	3-77	Rev. Plan, Schematics & Schedule-Add Chem. Rm.	J.C.S.	S.R.S.

CITY OF HOUSTON
DEPARTMENT OF PUBLIC WORKS

ALMEDA-SIMS SLUDGE DISPOSAL PLANT—1973

LUNCH ROOM & REST ROOM

SEWER PLUMBING PLAN

RECOMMENDED FOR APPROVAL:
BINKLEY & HOLMES, INC., CONSULTING ENGINEERS

APPROVED:
CHIEF ENGINEER — ASST. CHIEF ENGINEER
ASST. DIRECTORS OF PUBLIC WORKS
DIRECTOR OF PUBLIC WORKS

DESIGNED BY: P. ESPINOZA
DRAWN BY: D. HOGAN
CHECKED BY: M. D. J.
SCALE: AS SHOWN
DATE: DEC. 1973
SHEET 73 OF 200 SHEETS
DRAWING NO. 18045

64

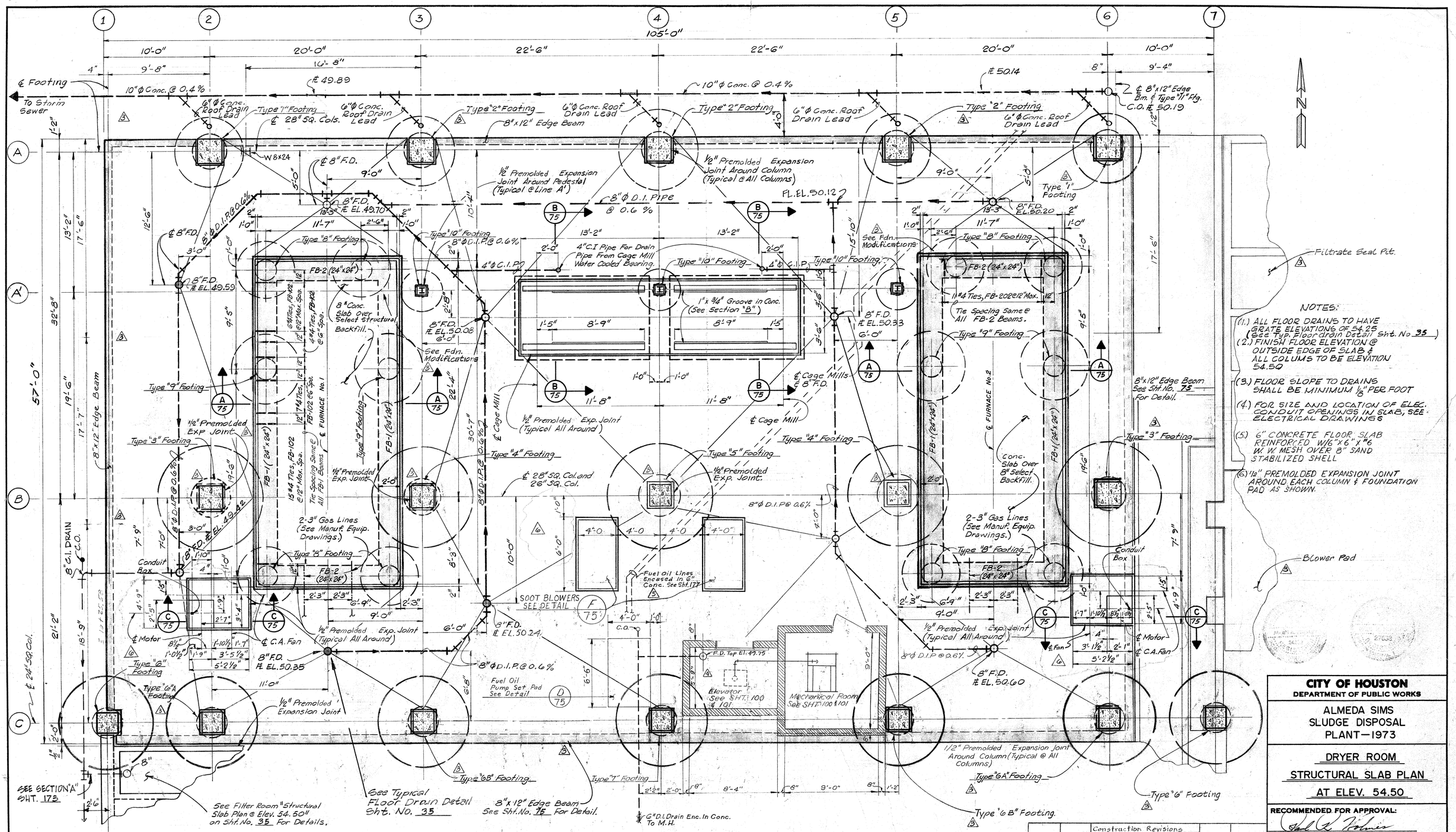

NOTES:

(1.) ALL FLOOR DRAINS TO HAVE GRATE ELEVATIONS OF 54.25 (See Typ. Floor Drain Detail Sht. No. 35)

(2.) FINISH FLOOR ELEVATION @ OUTSIDE EDGE OF SLAB & ALL COLUMS TO BE ELEVATION 54.50

(3.) FLOOR SLOPE TO DRAINS SHALL BE MINIMUM ⅛" PER FOOT

(4.) FOR SIZE AND LOCATION OF ELEC. CONDUIT OPENINGS IN SLAB, SEE ELECTRICAL DRAWINGS

(5.) 6" CONCRETE FLOOR SLAB REINFORCED W6"x6"x#6 W.W. MESH OVER 8" SAND STABILIZED SHELL

(6.) 12" PREMOLDED EXPANSION JOINT AROUND EACH COLUMN & FOUNDATION PAD AS SHOWN.

STRUCTURAL SLAB PLAN AT ELEVATION 54.50

Scale: ¼"=1'-0"

REV. NO	DATE	DESCRIPTION	DESIGN	CHECKED
6	6-79	Construction Revisions Relocated Soot Blowers; Dim. Changes for C.A. Fan Fdns.	A.C.B.	H.J.K.
5	5-79	Permit Revision Add Fuel Oil Line	W.B.S.	H.J.K
4	11-78	Permit Revision Add Floor Drain	H.J.K.	K.R.L.
3	6-78	Construction Revisions Revised Footing Size Deleted Ftgs. A-1, A4, B-1	H.J.K.	K.R.L.
2	6-77	Rev. Elevator Relocate Fuel Oil Pad	J.C.S.	K.R.L.
1	3-77	General Modifications to Dimensions	J.C.S.	S.R.S.

CITY OF HOUSTON
DEPARTMENT OF PUBLIC WORKS

ALMEDA SIMS SLUDGE DISPOSAL PLANT—1973

DRYER ROOM

STRUCTURAL SLAB PLAN

AT ELEV. 54.50

RECOMMENDED FOR APPROVAL:
BINKLEY & HOLMES, INC., CONSULTING ENGINEERS

APPROVED:
CHIEF ENGINEER — ASST. CHIEF ENGINEER
ASST. DIRECTORS OF PUBLIC WORKS
DIRECTOR OF PUBLIC WORKS

DESIGNED BY: V. Tarri
DRAWN BY: G.M.E/Vcar
CHECKED BY: M.D.J. & S.R.S.
SCALE: As Shown
DATE: 12-7-1973
SHEET: 74 OF 200 SHEETS
DRAWING NO. 18045

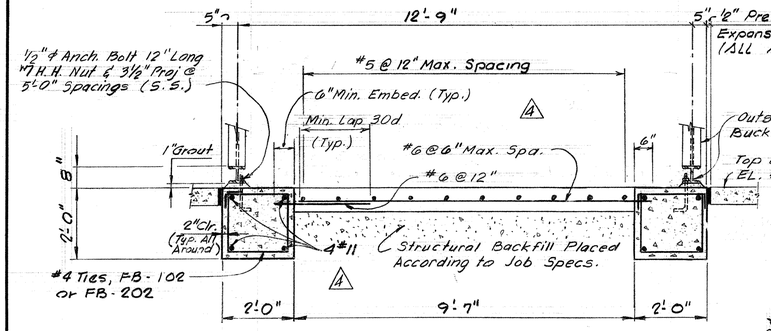

SECTION A/75

Scale: ½"=1'-0"

NOTES:
1. 6" Minimum Reinforcing Steel Embedment (Typ.) @ 12" O.C.
2. Minimum Splice Lap of 30 d. (Typ.)

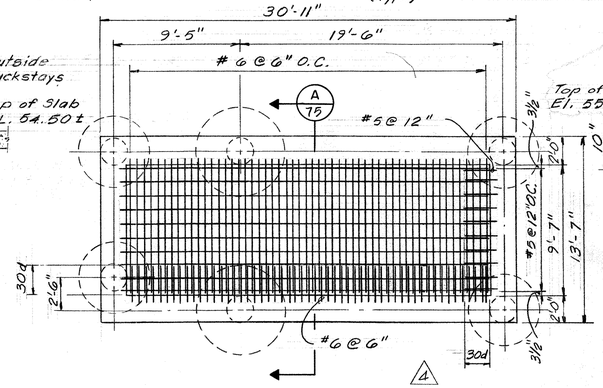

FURNACE SLAB PLAN

Scale: 3/16"=1'-0"

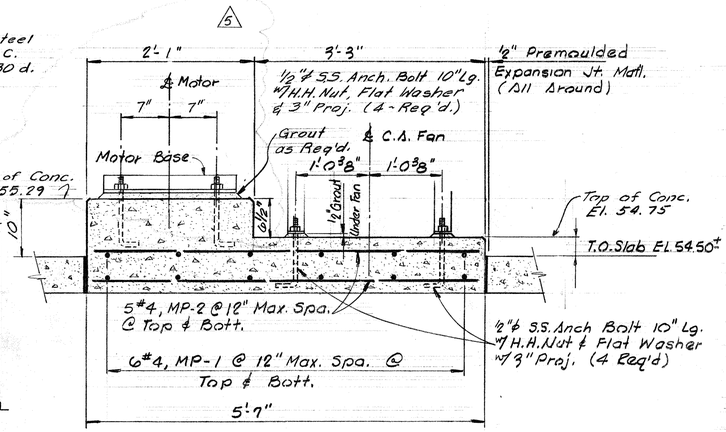

REINFORCING STEEL SCHEDULE FOR PADS, EDGE BEAMS, GRADE BEAMS, FURNACE BEAM

MARK	TYPE	SIZE	NO. REQ'D	LENGTH PER BAR	BENT BAR DIM. "A"	"B"
		FURNACE PAD				
FS-1	Str.	#5	26	29'-3"		
FS-2	Str.	#6	120	12'-8"		
		CAGE MILL PAD				
CM-1	Str.	#5	32	12'-0"		
CM-2	Str.	#5	52	7'-6"		
		MOTOR PAD				
MP-1	Str.	#4	24	4'-2"		
MP-2	Str.	#4	20	5'-3"		
		EDGE BEAMS				
EB-1	3	#5	4	#57'-2"	#56'-2"	1'-0"
EB-2	3	#5	4	9'-5"	8'-5"	1'-0"
EB-3	Str.	#5	8	17'-3"		
EB-4	Str.	#5	8	19'-9"		
EB-5	Str.	#5	4	30'-0"		
EB-6	Str.	#5	4	6'-2"		
EB-7	Str.	#5	8	7'-6"		
EB-8	Str.	#5	8	17'-7"		
EB-9	Str.	#5	8	20'-1"		
		PUMP SET PAD				
PS-1	Str.	#5	4	9"		
PS-2	Str.	#5	2	6'-0"		
PS-3	Str.	#5	2	3'-6"		
		FURNACE BEAM FB-1				
FB-101	1	#11	16	34'-7"	30'-7"	2'-0"
FB-102	2	#4	128	8'-0"	1'-8"	1'-8"
		FURNACE BEAM FB-2				
FB-201	1	#11	16	17'-3"	13'-3"	2'-0"
FB-202	2	#4	44	8'-0"	1'-8"	1'-8"

* Includes 2'-6" Lap

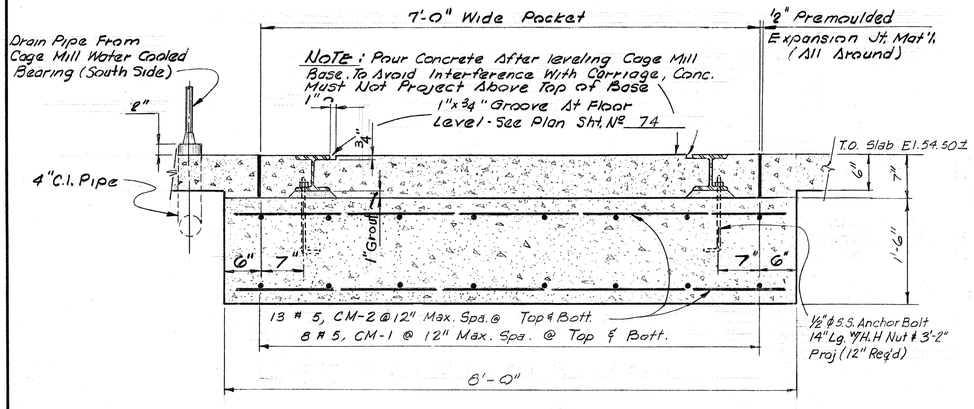

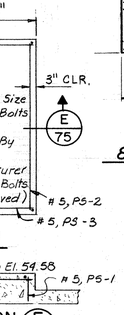

PLAN

SECTION E

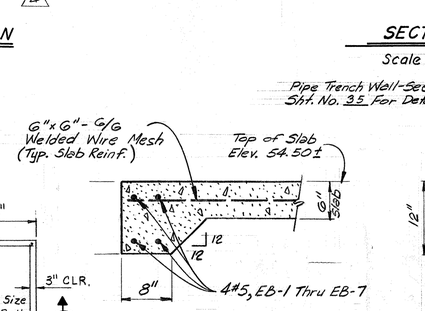

8"x12" EDGE BEAM

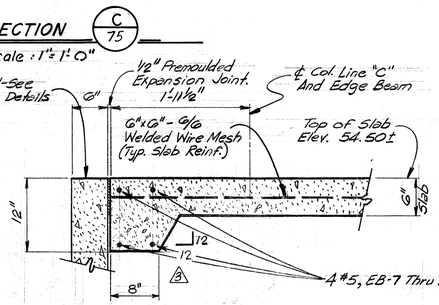

8"x12" EDGE BEAM ALONG LINE "C"

TYP. EDGE BEAM DETAILS

Scale: 1"=1'-0"

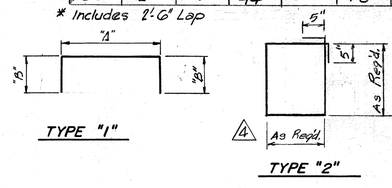

BENT BAR DETAILS

See Schedule For Dimensions

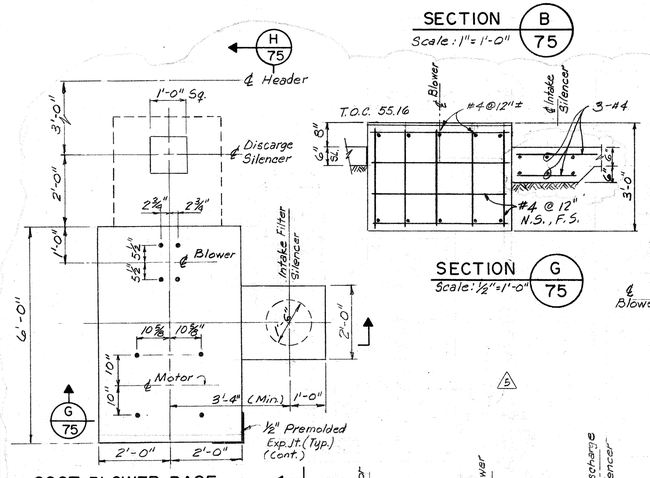

SECTION G/75

Scale: ½"=1'-0"

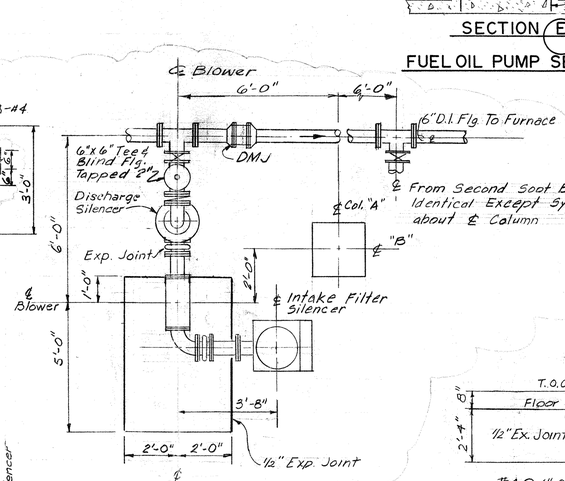

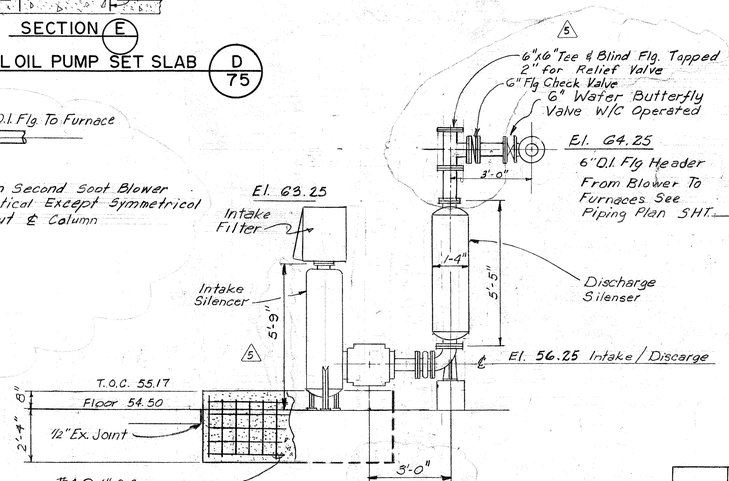

SOOT BLOWER DETAIL F/75

TYPE FOR TWO

SCALE 3/8" = 1'-0"

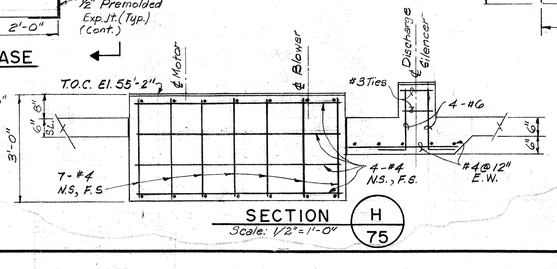

SECTION H/75

Scale: 1/2"=1'-0"

NOTE:
1.) Slab Varies In Elev For Drainage See Plan Sheet 74
2.) Equipment Foundation Dimensions And Elevations Shown Are Approximate And Are To Be Adjusted As Req'd By Equipment Furnished

REV. NO.	DATE	DESCRIPTION	DESIGN	CHECKED
5	6-79	Construction Revisions Soot Blower and C.A. Fan Dimension changed to fit equipment	A.C.B.	H.J.K.
4	5-79	Construction Revisions Change "Type 2" Bent Bar Det. Delete Bar Schedule Lowered Furnace Slab to Conform to Dryer Manuf. Requirements	D.D.C.	H.J.K.
3	6-78	Construction Revision Revised Edge Beam Det. @ Line "C"	H.J.K.	K.R.L.
2	6-77	Add Note 2	J.C.S.	K.R.L.
1	3-77	General Modifications & Soot Blowers Added	J.C.S.	S.R.S.

CITY OF HOUSTON
DEPARTMENT OF PUBLIC WORKS

ALMEDA SIMS SLUDGE DISPOSAL PLANT - 1973

DRYER ROOM

STRUCTURAL SLAB SECTIONS & MISC. DETAILS AT EL. 54.50

RECOMMENDED FOR APPROVAL:
BINKLEY & HOLMES, INC., CONSULTING ENGINEERS

APPROVED:
Walter Williams
CHIEF ENGINEER — ASST. CHIEF ENGINEER
ASST. DIRECTORS OF PUBLIC WORKS
DIRECTOR OF PUBLIC WORKS

DESIGNED BY: V. Jafri
DRAWN BY: G.T.RYAN & G. McVicar
CHECKED BY: M.W.J. & S.R.S.
SCALE: As Shown
DATE: Dec, 1973
SHEET 75 OF 200 SHEETS
DRAWING NO. 18045

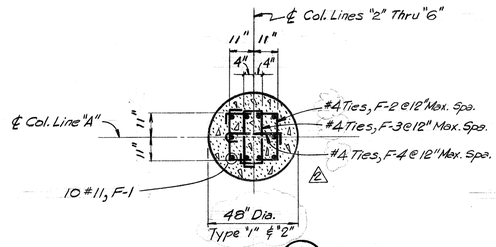

SECTION A
Scale: 3/8"=1'-0"

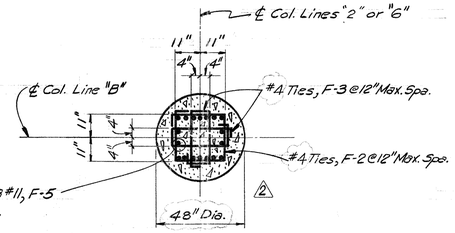

SECTION B
Scale: 3/8"=1'-0"

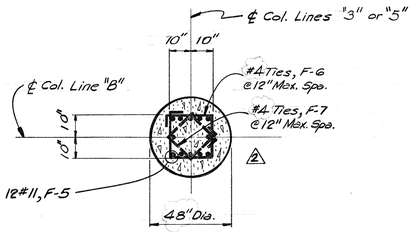

SECTION C
Scale: 3/8"=1'-0"

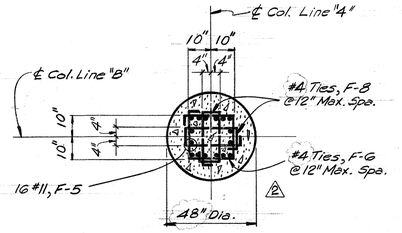

SECTION D
Scale: 3/8"=1'-0"

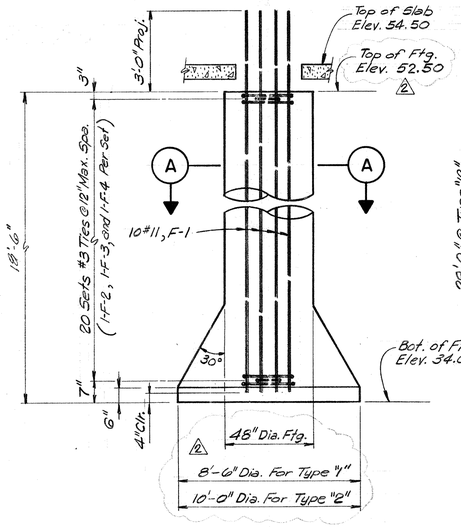

TYPE "1" & TYPE "2" FOOTINGS
Scale: 3/8"=1'-0"

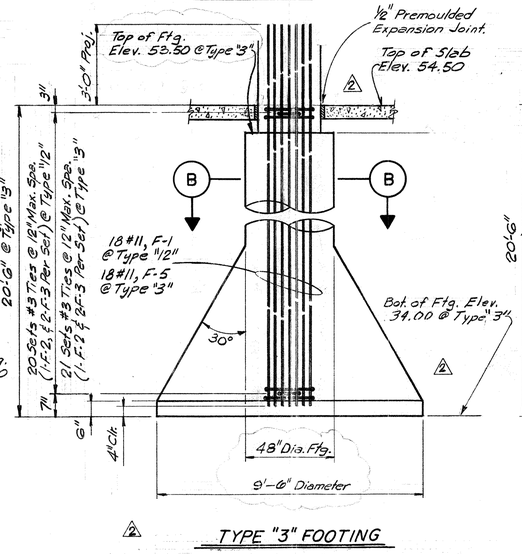

TYPE "3" FOOTING
Scale: 3/8"=1'-0"

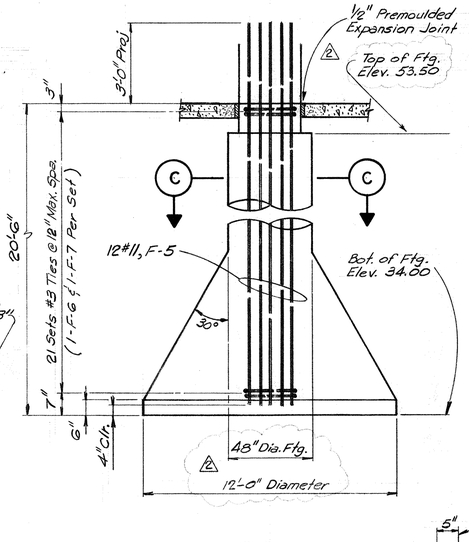

TYPE "4" FOOTING
Scale: 3/8"=1'-0"

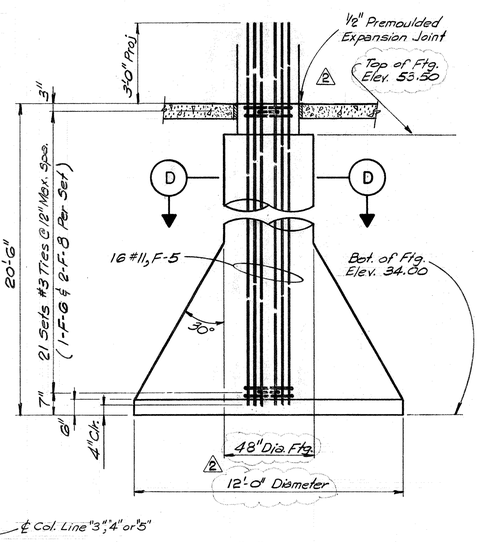

TYPE "5" FOOTING
Scale: 3/8"=1'-0"

2	6-78	Construction Revisions Revised Footing Dimensions Revised Top Of Footing And Slab Elev., Deleted Type "11" Ftg. Detail, and Bar Schedule.	H.J.K.	K.R.L.
1	3-77	General Modifications to Dimensions	J.C.S.	S.R.S.
REV. NO.	DATE	DESCRIPTION	DESIGN	CHECKED

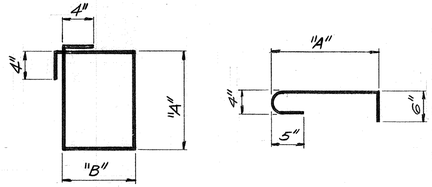

TYPE "1" TYPE "2"

BENT BAR DETAILS
See Schedule For Dimensions

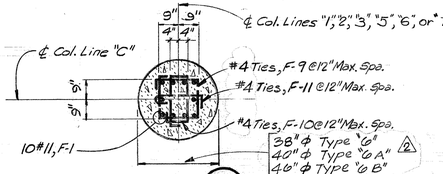

SECTION E
Scale: 3/8"=1'-0"

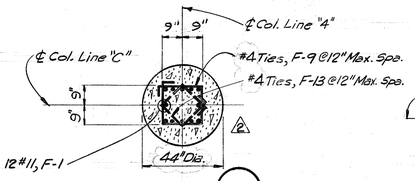

SECTION F
Scale: 3/8"=1'-0"

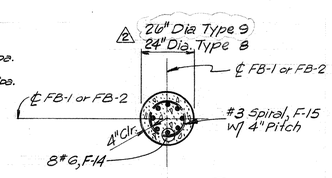

SECTION G
Scale: 3/8"=1'-0"

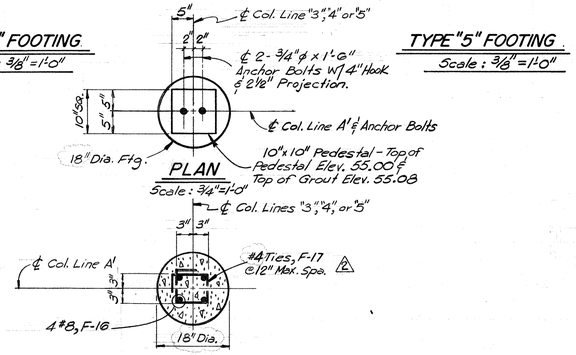

SECTION H
Scale: 3/4"=1'-0"

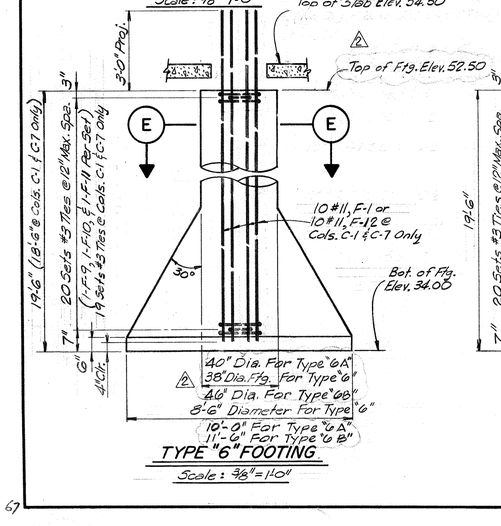

TYPE "6" FOOTING
Scale: 3/8"=1'-0"

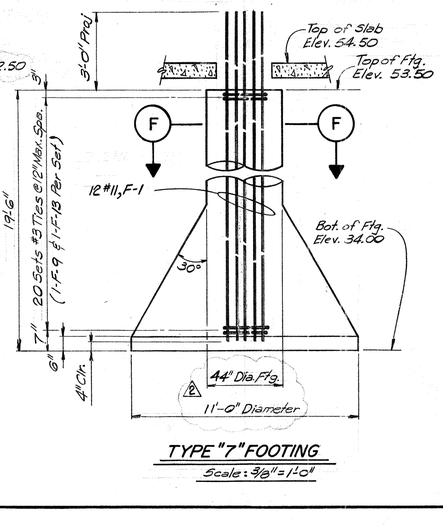

TYPE "7" FOOTING
Scale: 3/8"=1'-0"

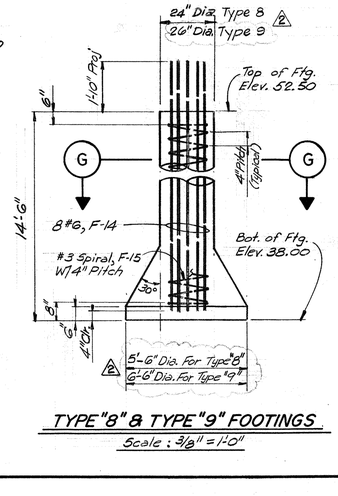

TYPE "8" & TYPE "9" FOOTINGS
Scale: 3/8"=1'-0"

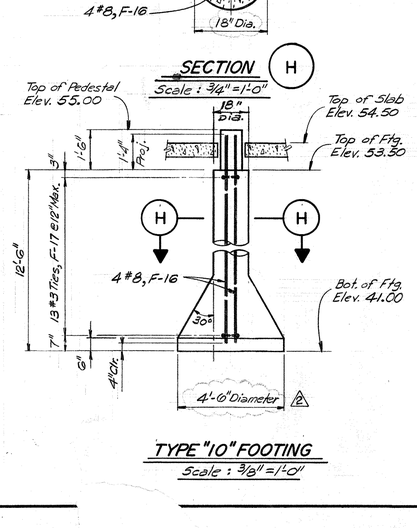

TYPE "10" FOOTING
Scale: 3/8"=1'-0"

CITY OF HOUSTON
DEPARTMENT OF PUBLIC WORKS

ALMEDA SIMS
SLUDGE DISPOSAL
PLANT—1973

DRYER ROOM

FOOTING DETAILS

RECOMMENDED FOR APPROVAL:
Paul R. Holmes
BINKLEY & HOLMES, INC., CONSULTING ENGINEERS

APPROVED:
Walter Williams
CHIEF ENGINEER — ASST. CHIEF ENGINEER
ASST. DIRECTORS OF PUBLIC WORKS
DIRECTOR OF PUBLIC WORKS

DESIGNED BY: V. Jaeri
DRAWN BY: G. Mc Vicar
CHECKED BY: M.B.J. & S.R.S.
SCALE: As Shown
DATE: Dec., 1973
SHEET 76 OF 200 SHEETS
DRAWING NO. 18045

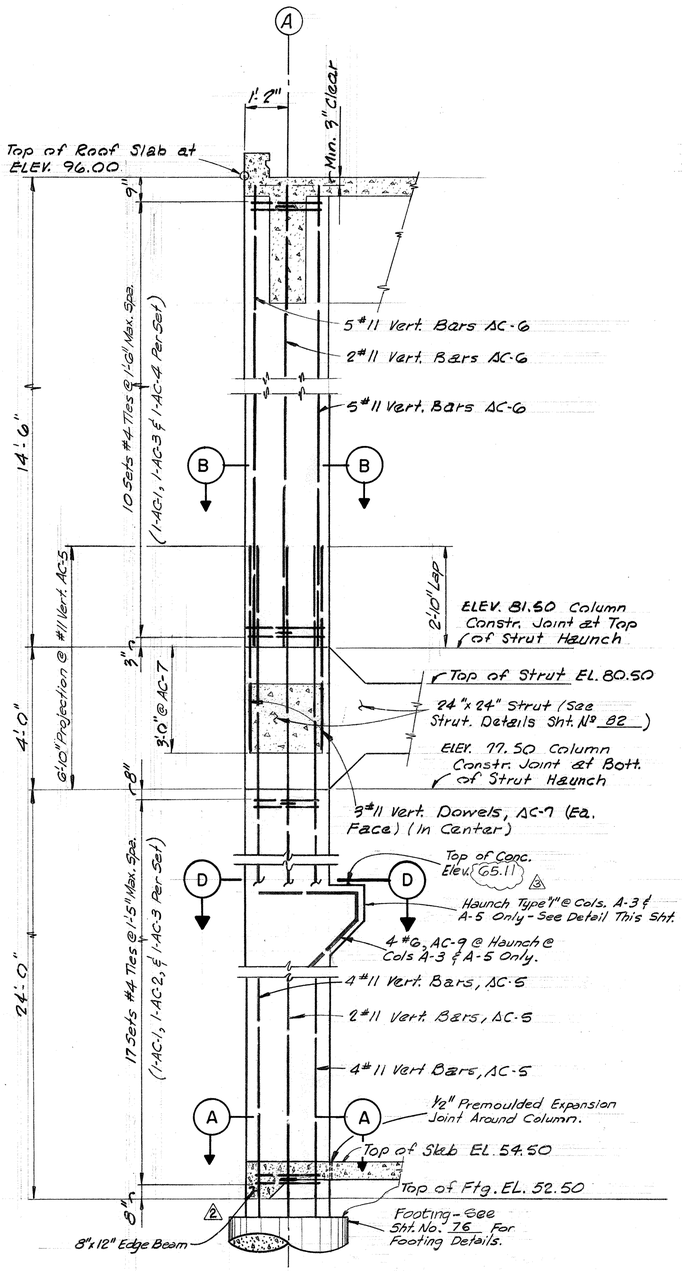

ELEVATION AT COLUMN A-2, A-3, A-5, & A-6

Scale: ½" = 1'-0"

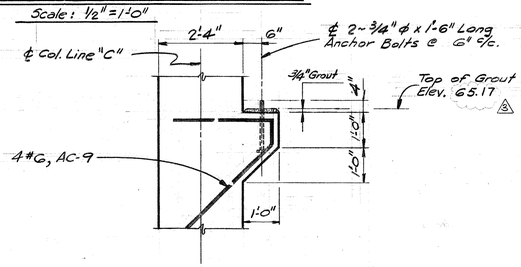

HAUNCH TYPE "1"

Scale: ½" = 1'-0"

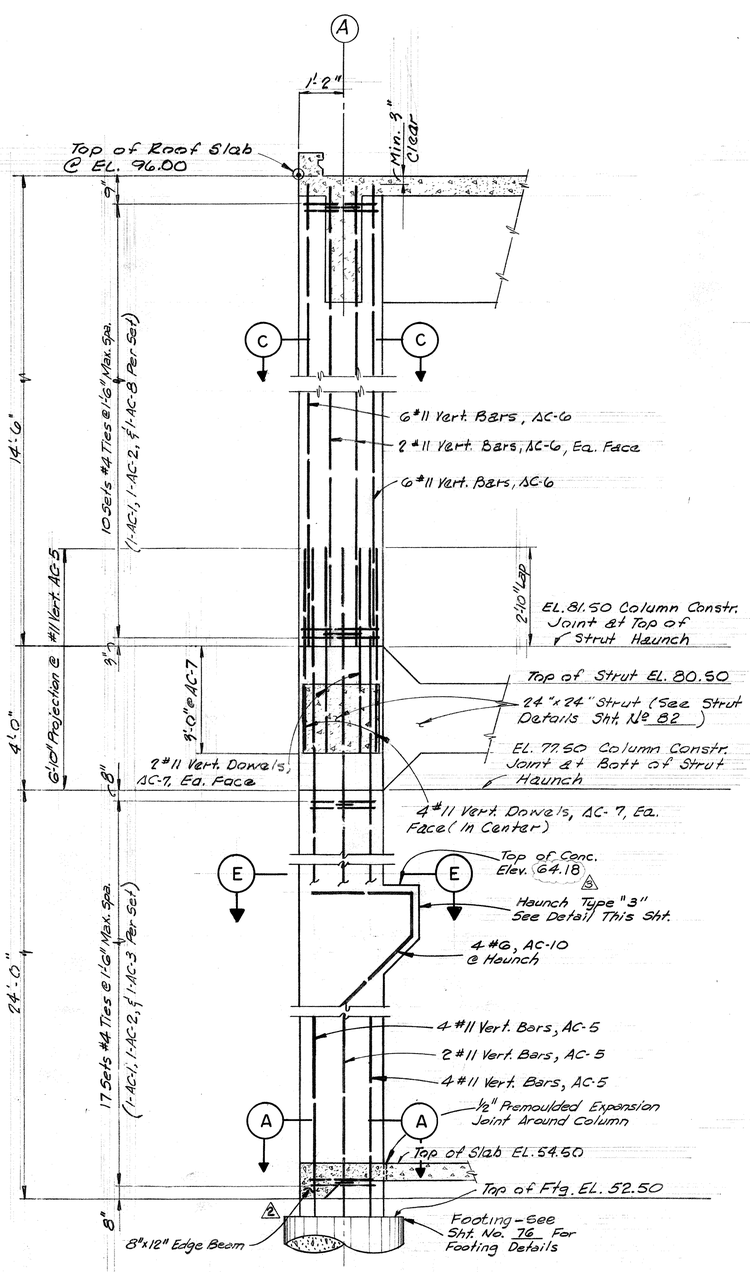

ELEVATION AT COLUMN A-4

Scale: ½" = 1'-0"

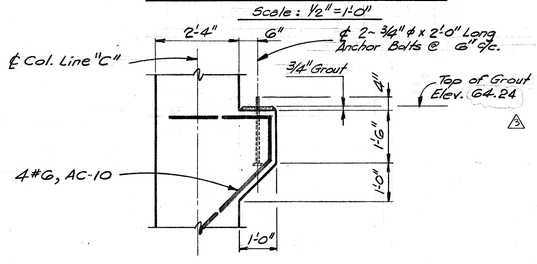

HAUNCH TYPE "3"

Scale: ½" = 1'-0"

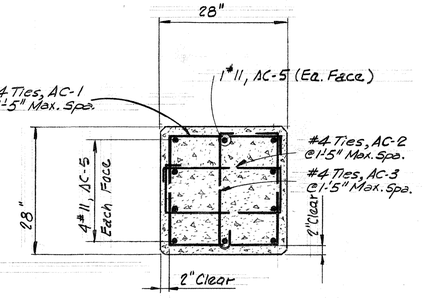

SECTION A

Scale: ¾" = 1'-0"

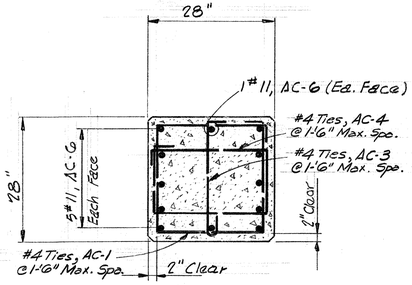

SECTION B

Scale: ¾" = 1'-0"

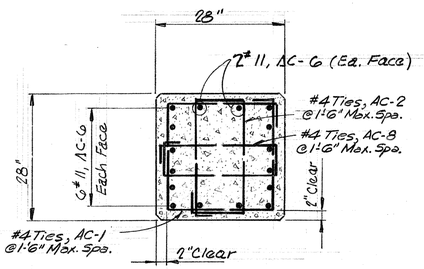

SECTION C

Scale: ¾" = 1'-0"

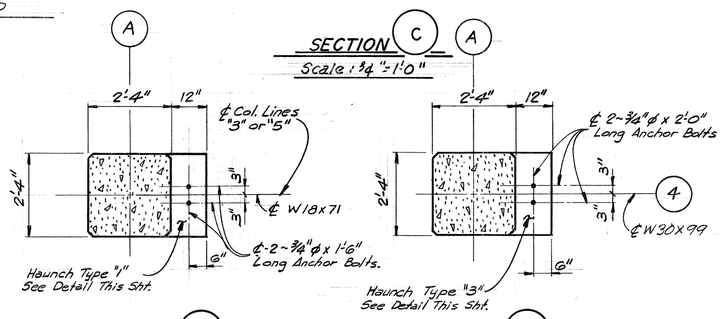

SECTION D

Scale: ½" = 1'-0"

SECTION E

Scale: ½" = 1'-0"

REINFORCING STEEL SCHEDULE FOR COLUMNS, A-1 THRU A-5

MARK	TYPE	SIZE	NO. REQ'D	LENGTH PER BAR	BENT BAR DIM. "A"	BENT BAR DIM. "B"
AC-1	1	#4	135	8'-8"	2'-0"	2'-0"
AC-2	1	#4	95	6'-4"	2'-0"	0'-10"
AC-3	2	#4	125	3'-1"	2'-0"	0'-6"
AC-4	1	#4	40	6'-10"	2'-0"	1'-1"
AC-5	Str.	#11	50	30'-10"		
AC-6	Str.	#11	64	14'-3"		
AC-7	Str.	#11	36	5'-10"		
AC-8	1	#4	10	5'-10"	2'-0"	0'-7"
AC-9	3	#6	8	7'-1"	As Shown	
AC-10	4	#6	4	8'-1"	As Shown	

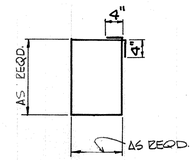

TYPE "1"

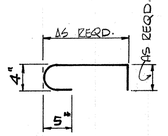

TYPE "2"

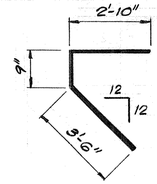

TYPE "3"

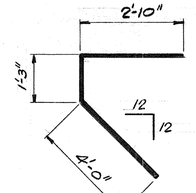

TYPE "4"

BENT BAR DETAILS

See Schedule For Dimensions

JAMES A. BINKLEY REGISTERED PROFESSIONAL ENGINEER 27638

PAUL R. HOLMES REGISTERED PROFESSIONAL ENGINEER 27638

CITY OF HOUSTON
DEPARTMENT OF PUBLIC WORKS

ALMEDA SIMS SLUDGE DISPOSAL PLANT - 1973

DRYER ROOM

COLUMN DETAILS

AT LINE "A"

RECOMMENDED FOR APPROVAL:
BINKLEY & HOLMES, INC., CONSULTING ENGINEERS

APPROVED:
CHIEF ENGINEER — ASST. CHIEF ENGINEER
ASST. DIRECTORS OF PUBLIC WORKS
DIRECTOR OF PUBLIC WORKS

DESIGNED BY: V. Jafri
DRAWN BY: G.T. RYAN & G. McVicar
CHECKED BY: M.D.T. & S.E.S.
SCALE: As Shown
DATE: Dec., 1973
SHEET 77 OF 200 SHEETS
DRAWING NO. 18045

REV. NO.	DATE	DESCRIPTION	DESIGN	CHECKED
3	5-79	Construction Rev., Delete Bar Schedule, Rev. Haunch T.O.C. Elev.	D.D.C.	H.J.K.
2	6-78	Construction Revisions, Revised Ftg. Dim. & Top of Ftg. Elev.	H.J.K.	K.R.L.
1	3-77	General Modifications to Dimensions	J.C.S.	S.R.S.

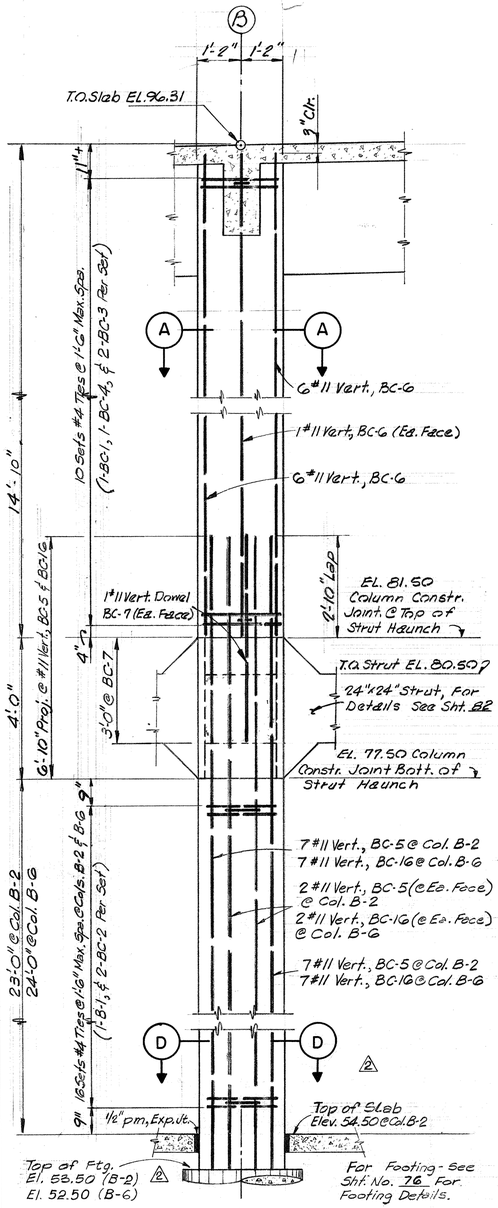

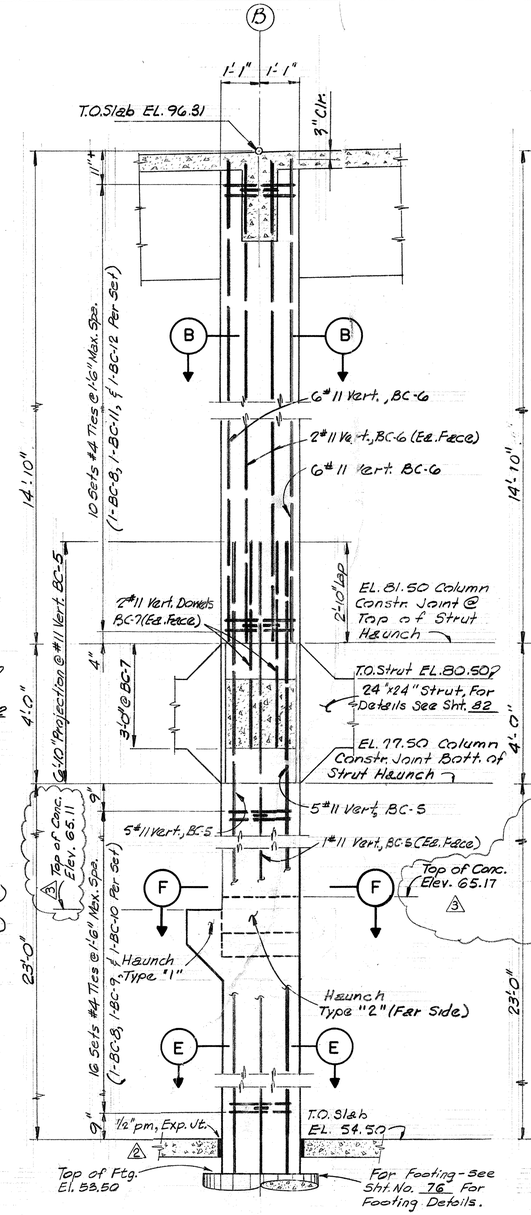

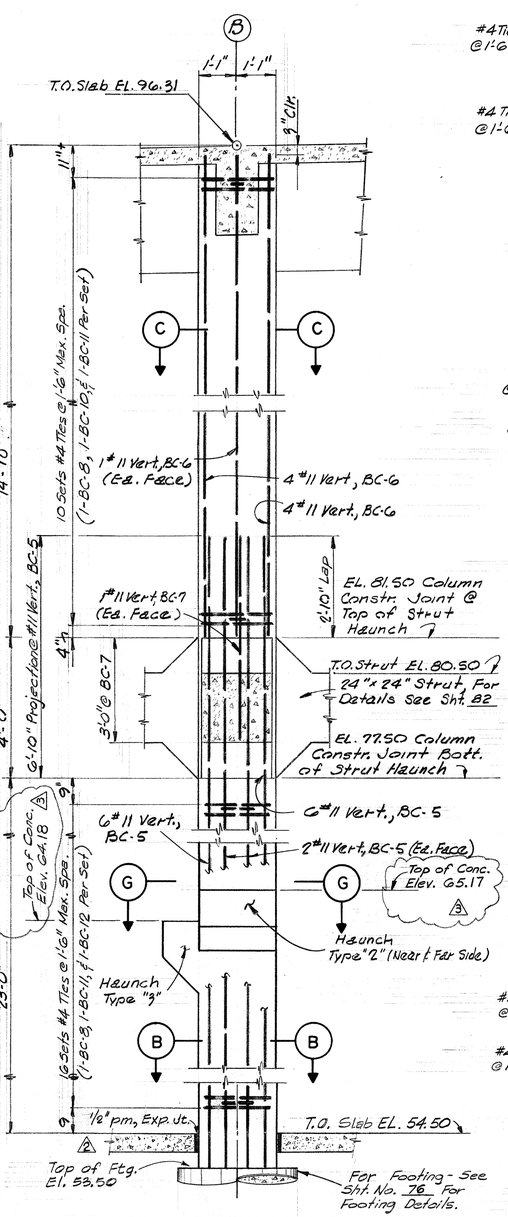

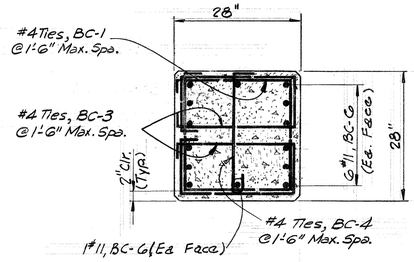

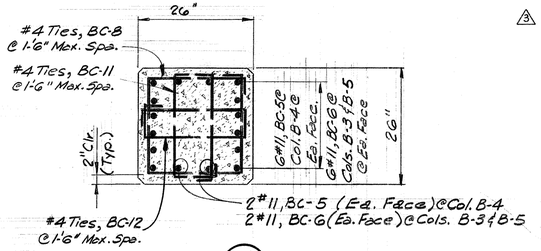

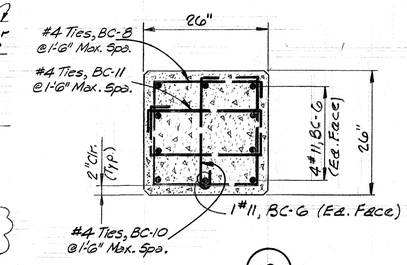

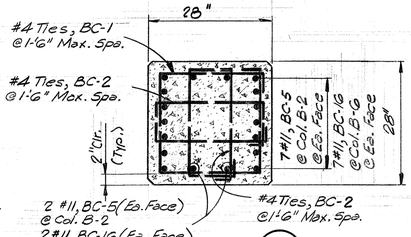

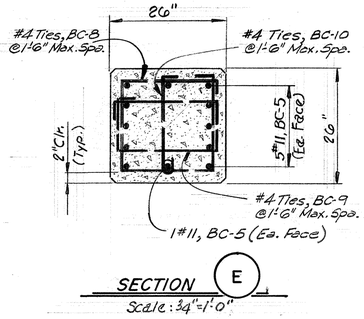

REINFORCING STEEL SCHEDULE FOR COLUMNS B-1 THRU B-5

MARK	TYPE	SIZE	NO. REQ'D	LENGTH PER BAR	BENT BAR DIM. "A"	BENT BAR DIM. "B"
BC-1	1	#4	52	8'-8	2'-0"	2'-0"
BC-2	1	#4	64	6'-4"	2'-0"	0'-10"
BC-3	1	#4	40	6'-8"	2'-0"	1'-0"
BC-4	2	#4	20	3'-1"	2'-0"	0'-6"
BC-5	Str.	#11	58	29'-10"		
BC-6	Str.	#11	70	14'-6"		
BC-7	Str.	#11	14	5'-10"		
BC-8	1	#4	78	8'-0"	1'-10"	1'-10"
BC-9	1	#4	32	6'-4"	1'-10"	1'-0"
BC-10	2	#4	42	2'-11"	1'-10"	0'-6"
BC-11	1	#4	46	5'-10"	1'-10"	0'-9"
BC-12	1	#4	36	5'-6"	1'-10"	0'-7"
BC-13	4	#6	8	7'-2"	2'-8"	0'-9"
BC-14	3	#6	16	6'-5"	2'-4"	0'-9"
BC-15	4	#6	4	7'-8"	2'-8"	1'-3"
BC-16	Str.	#11	18	30'-10"		

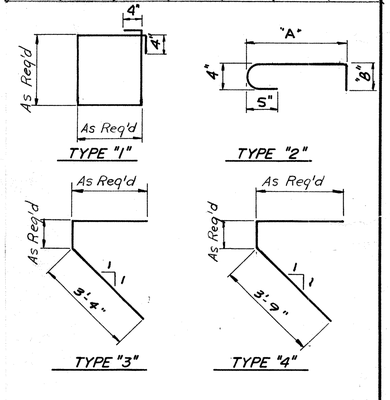

BENT BAR DETAILS

REV.No.	DATE	DESCRIPTION	DESIGN	CHECKED
3	10-78	Construction Revisions Deleted Bar Schedule Revised Haunch T.O.C. Elev.	H.J.K.	K.R.L.
2	6-78	Foundation Revisions	H.J.K.	K.R.L.
1	3-77	General Modifications to Dimensions	J.C.S.	S.R.S.

CITY OF HOUSTON
DEPARTMENT OF PUBLIC WORKS

ALMEDA SIMS SLUDGE DISPOSAL PLANT - 1973

DRYER ROOM COLUMN DETAILS AT LINE "B"

RECOMMENDED FOR APPROVAL:
BINKLEY & HOLMES, INC., CONSULTING ENGINEERS

APPROVED:
CHIEF ENGINEER. ASST. CHIEF ENGINEER
ASST. DIRECTORS OF PUBLIC WORKS
DIRECTOR OF PUBLIC WORKS

DESIGNED BY: V. Jafri
DRAWN BY: G.T. RYAN & G. McVicar
CHECKED BY: M.B.I. & S.R.S.
SCALE: As Shown
DATE: Dec., 1973
SHEET 78 OF 200 SHEETS
DRAWING NO. 18045

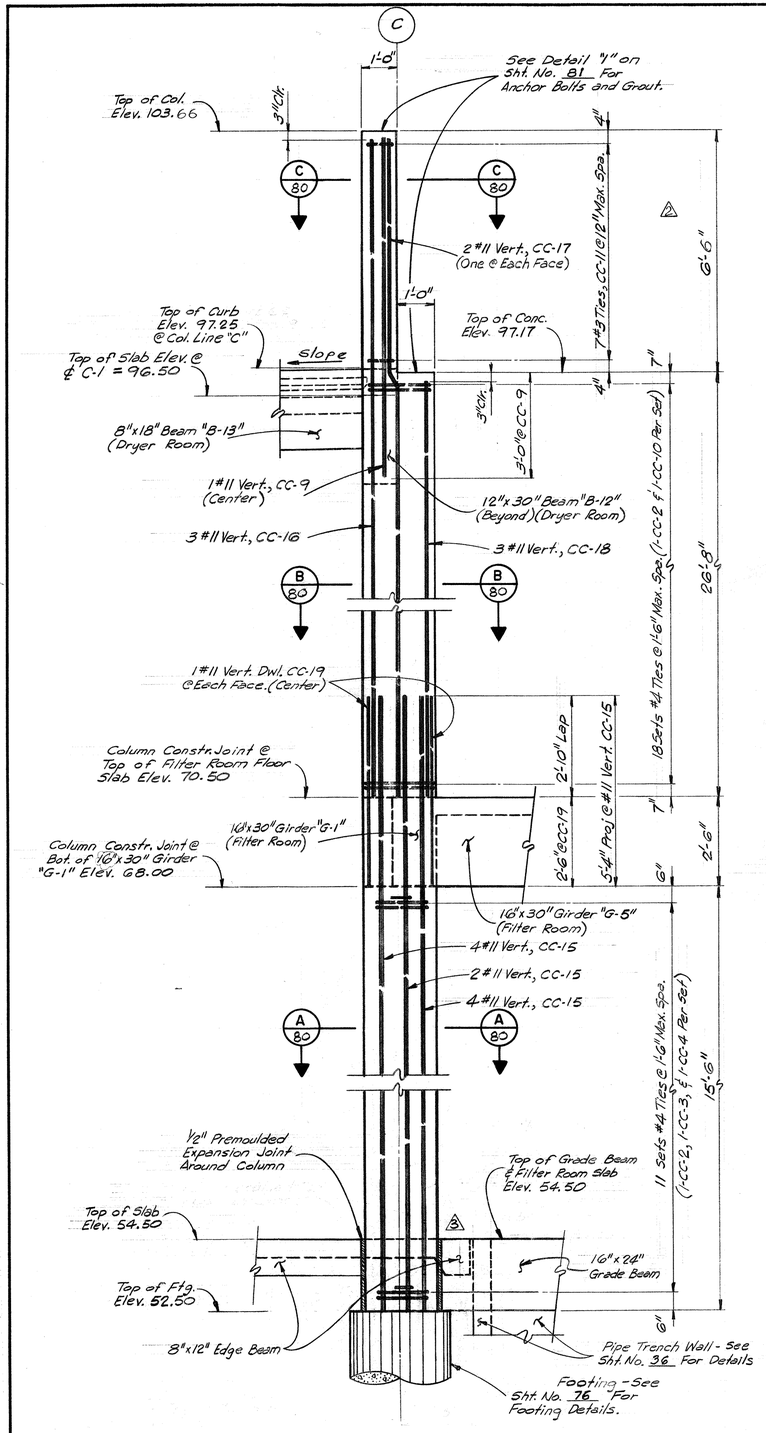

ELEVATION AT COLUMN C-1

Scale : 1/2"=1'-0"

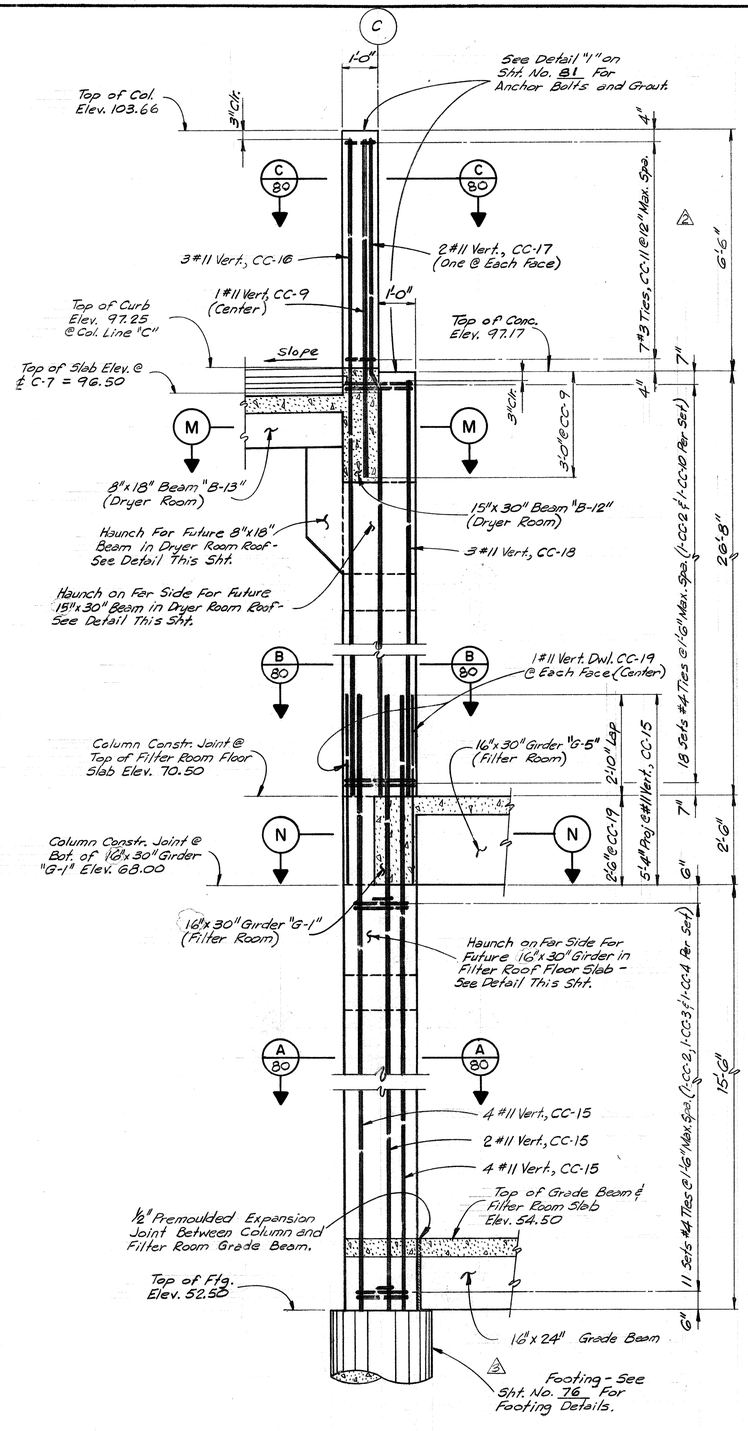

ELEVATION AT COLUMN C-7

Scale : 1/2"=1'-0"

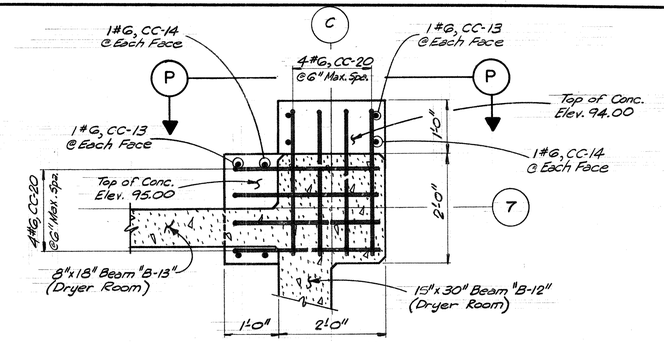

SECTION M

Scale : 3/4"=1'-0"

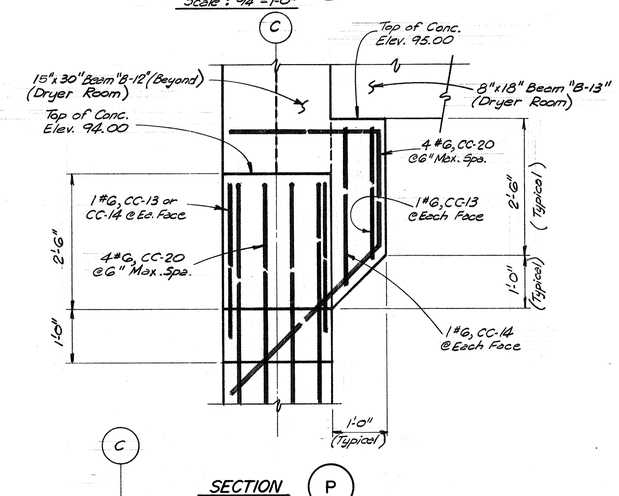

SECTION P

Scale : 3/4"=1'-0"

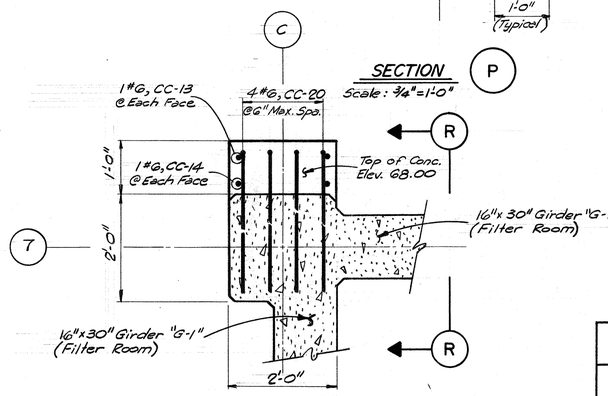

SECTION N

Scale : 3/4"=1'-0"

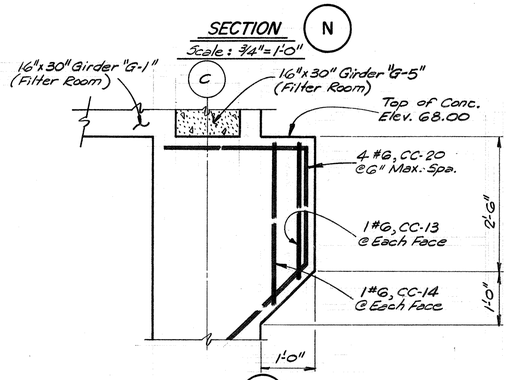

SECTION R

Scale : 3/4"=1'-0"

REV.NO.	DATE	DESCRIPTION	DESIGN	CHECKED
3	6-78	Construction Revisions Revised Footings	H.J.K.	K.R.L.
2	6-77	Dimension Change	J.C.S.	K.R.L
1	3-77	General Modifications	J.C.S.	S.R.S.

CITY OF HOUSTON
DEPARTMENT OF PUBLIC WORKS

ALMEDA SIMS
SLUDGE DISPOSAL
PLANT—1973

DRYER ROOM
COLUMN DETAILS AT LINE "C"
COLUMNS C-1 & C-7

RECOMMENDED FOR APPROVAL:
BINKLEY & HOLMES, INC., CONSULTING ENGINEERS

APPROVED:
CHIEF ENGINEER
ASST. CHIEF ENGINEER
ASST. DIRECTORS OF PUBLIC WORKS
DIRECTOR OF PUBLIC WORKS

DESIGNED BY: V. Jafri
DRAWN BY: G.McVicar
CHECKED BY: M.B.J. & S.R.S.
SCALE: As Shown
DATE: Dec., 1973
SHEET 79 OF 200 SHEETS
DRAWING NO. 18045

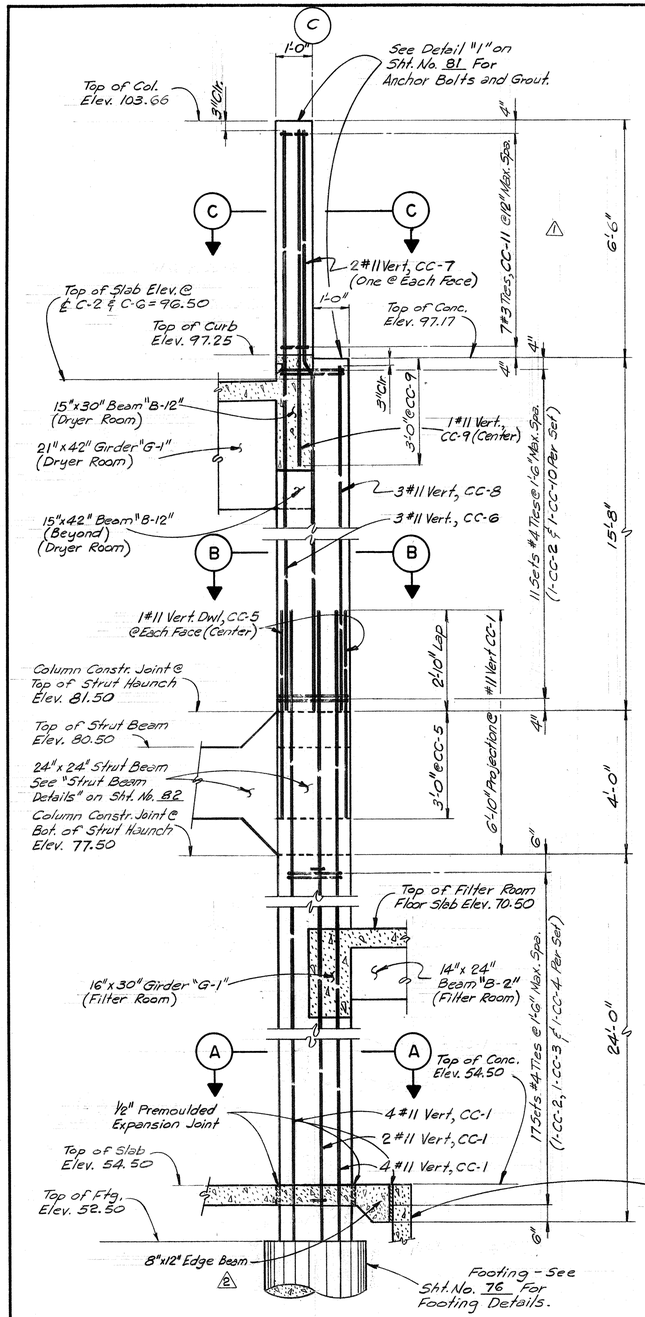

ELEVATION AT COLUMN C-2 & C-6

Scale : ½" = 1'-0"

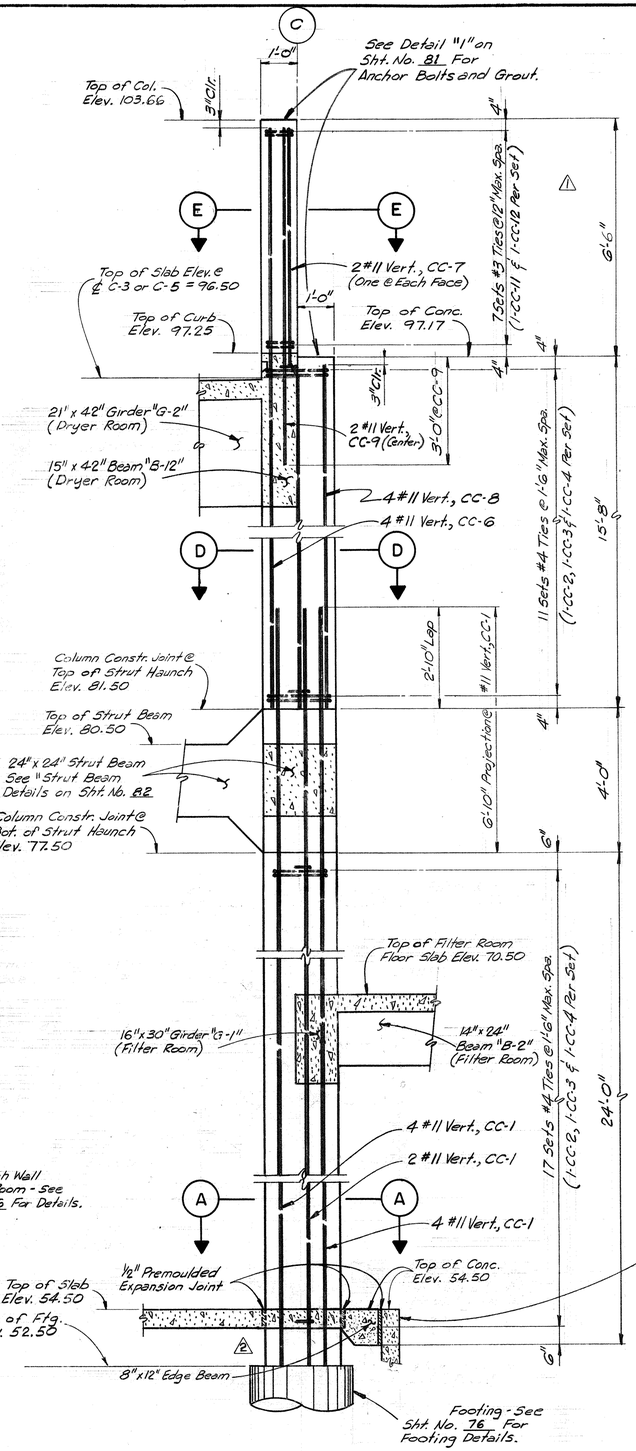

ELEVATION AT COLUMN C-3 & C-5

Scale : ½" = 1'-0"

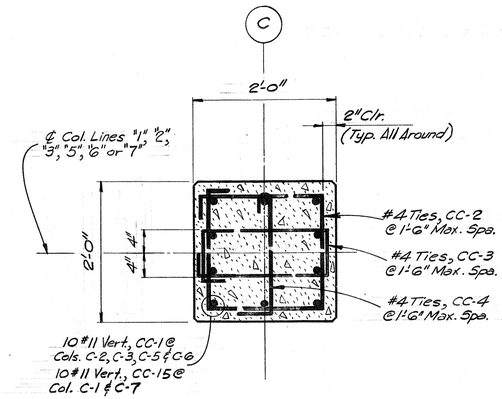

SECTION A

Scale : 1" = 1'-0"

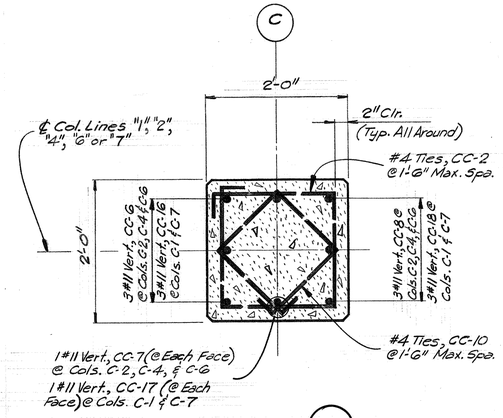

SECTION B

Scale : 1" = 1'-0"

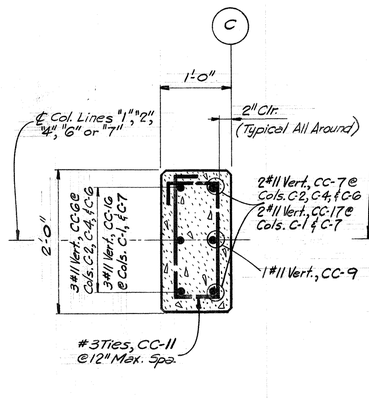

SECTION C

Scale : 1" = 1'-0"

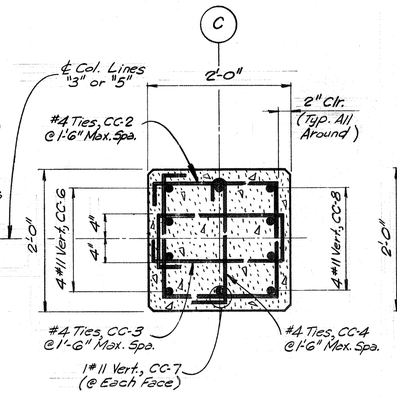

SECTION D

Scale : 1" = 1'-0"

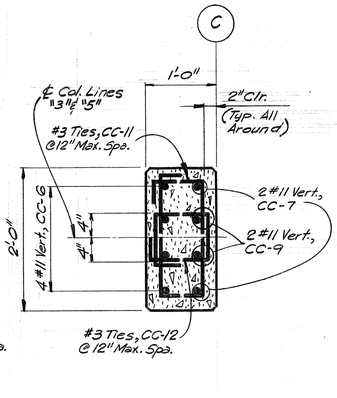

SECTION E

Scale : 1" = 1'-0"

NOTES:

1) For Reinforcing Steel Schedule See Sht. No. 81 .

REV. NO	DATE	Description	Design Check
2	6-78	Construction Revisions Revised Footings	H.J.K. K.R.L.
1	—	Dimension Change	J.L.S. S.R.S.

CITY OF HOUSTON
DEPARTMENT OF PUBLIC WORKS

ALMEDA SIMS SLUDGE DISPOSAL PLANT—1973

DRYER ROOM

COLUMN DETAILS AT LINE "C"

COLUMNS C-2, C-3, C-5, & C-6

RECOMMENDED FOR APPROVAL:
BINKLEY & HOLMES, INC., CONSULTING ENGINEERS

APPROVED:
CHIEF ENGINEER — ASST. CHIEF ENGINEER
ASST. DIRECTORS OF PUBLIC WORKS
DIRECTOR OF PUBLIC WORKS

DESIGNED BY: V. Darr
DRAWN BY: G.M.S/Vicar
CHECKED BY: M.D.J. & S.R.S.
SCALE: As Shown
DATE: Dec., 1973
SHEET 80 OF 200 SHEETS
DRAWING NO. 18045

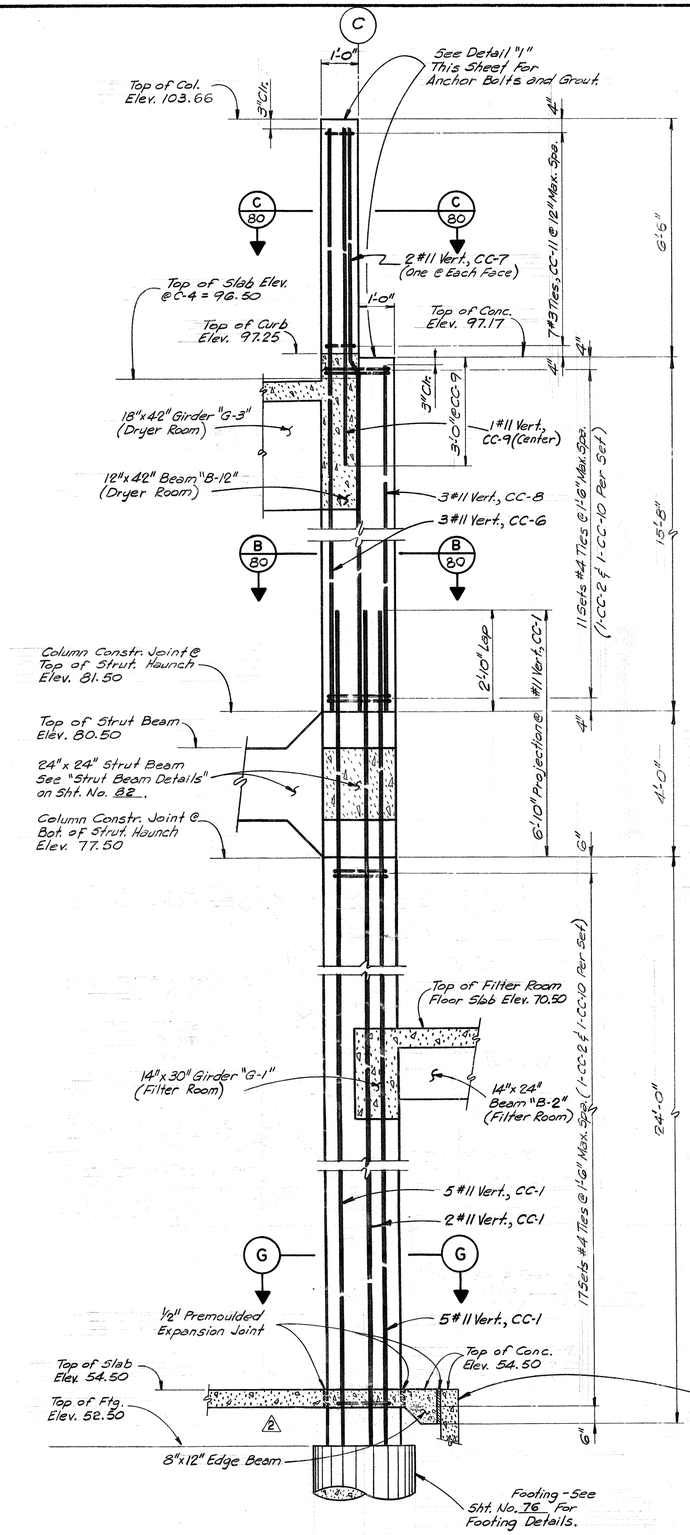

ELEVATION AT COLUMN C-4

Scale : 1/2" = 1'-0"

REV. NO	DATE	DESCRIPTION	DESIGN	CHECKED
2	6-78	Foundation Revisions	H.J.K.	K.R.L.
1	3-77	General Modifications to Dimensions	J.C.S.	S.R.S.

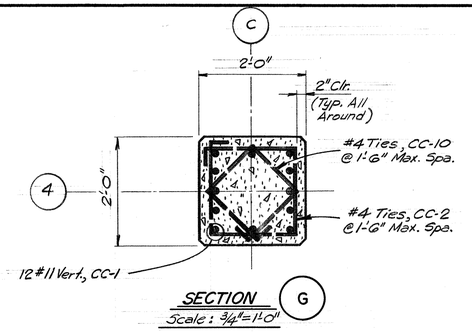

SECTION

Scale : 3/4" = 1'-0"

G

REINFORCING STEEL SCHEDULE FOR COLUMNS @ COL. LINE "C"

MARK	TYPE	SIZE	NO. REQ'D.	LENGTH PER BAR	BENT BAR DIM. A	B
CC-1	Str.	#11	52	30'-10"		
CC-2	1	#4	198	7'-4"	1'-8"	1'-8"
CC-3	1	#4	112	5'-4"	1'-8"	0'-8"
CC-4	2	#4	112	2'-9"	1'-8"	
CC-5	Str.	#11	4	5'-10"		
CC-6	Str.	#11	17	22'-1"		
CC-7	3	#11	10	22'-2"	As Shown	
CC-8	Str.	#11	17	15'-5"		
CC-9	Str.	#11	9	9'-5"		
CC-10	1	#4	86	5'-8"	1'-3"	1'-3"
CC-11	1	#3	49	5'-4"	1'-8"	0'-8"
CC-12	1	#3	14	3'-4"	0'-8"	0'-8"
CC-13	Str.	#6	6	2'-4"		
CC-14	Str.	#6	6	2'-10"		
CC-15	Str.	#11	20	20'-10"		
CC-16	Str.	#11	6	33'-1"		
CC-17	3	#11	4	33'-2"	As Shown	
CC-18	Str.	#11	6	26'-5"		
CC-19	Str.	#11	4	5'-4"		
CC-20	4	#6	12	8'-3"	As Shown	

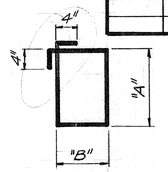

TYPE "1"

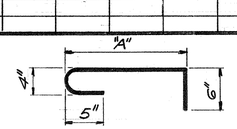

TYPE "2"

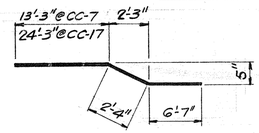

TYPE "3"

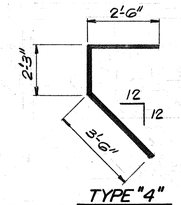

TYPE "4"

BENT BAR DETAILS

See Schedule For Dimensions

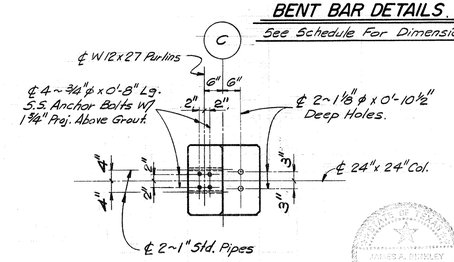

PLAN AT DETAIL "1"

Scale : 1/2" = 1'-0"

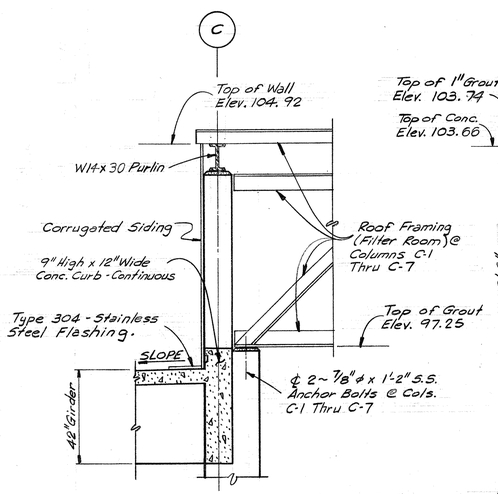

TYPICAL ROOF FRAMING DETAIL AT LINE "C"

Scale : 3/8" = 1'-0"

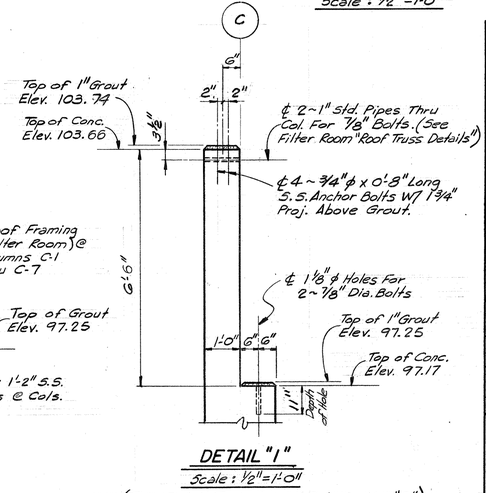

DETAIL "1"

Scale : 1/2" = 1'-0"

(This Detail Typical @ All Cols. on Line "C")

CITY OF HOUSTON
DEPARTMENT OF PUBLIC WORKS

ALMEDA SIMS
SLUDGE DISPOSAL
PLANT — 1973

DRYER ROOM

COLUMN DETAILS AT LINE "C"

COLUMN C-4

RECOMMENDED FOR APPROVAL:
BINKLEY & HOLMES, INC., CONSULTING ENGINEERS

APPROVED:
CHIEF ENGINEER
ASST. CHIEF ENGINEER
ASST. DIRECTORS OF PUBLIC WORKS
DIRECTOR OF PUBLIC WORKS

DESIGNED BY: V. Jafri
DRAWN BY: G.M.S Vicar
CHECKED BY: M.D.J. & S.R.S.
SCALE: As Shown
DATE: Dec. 1973
SHEET 81 OF 200 SHEETS
DRAWING NO. 18045

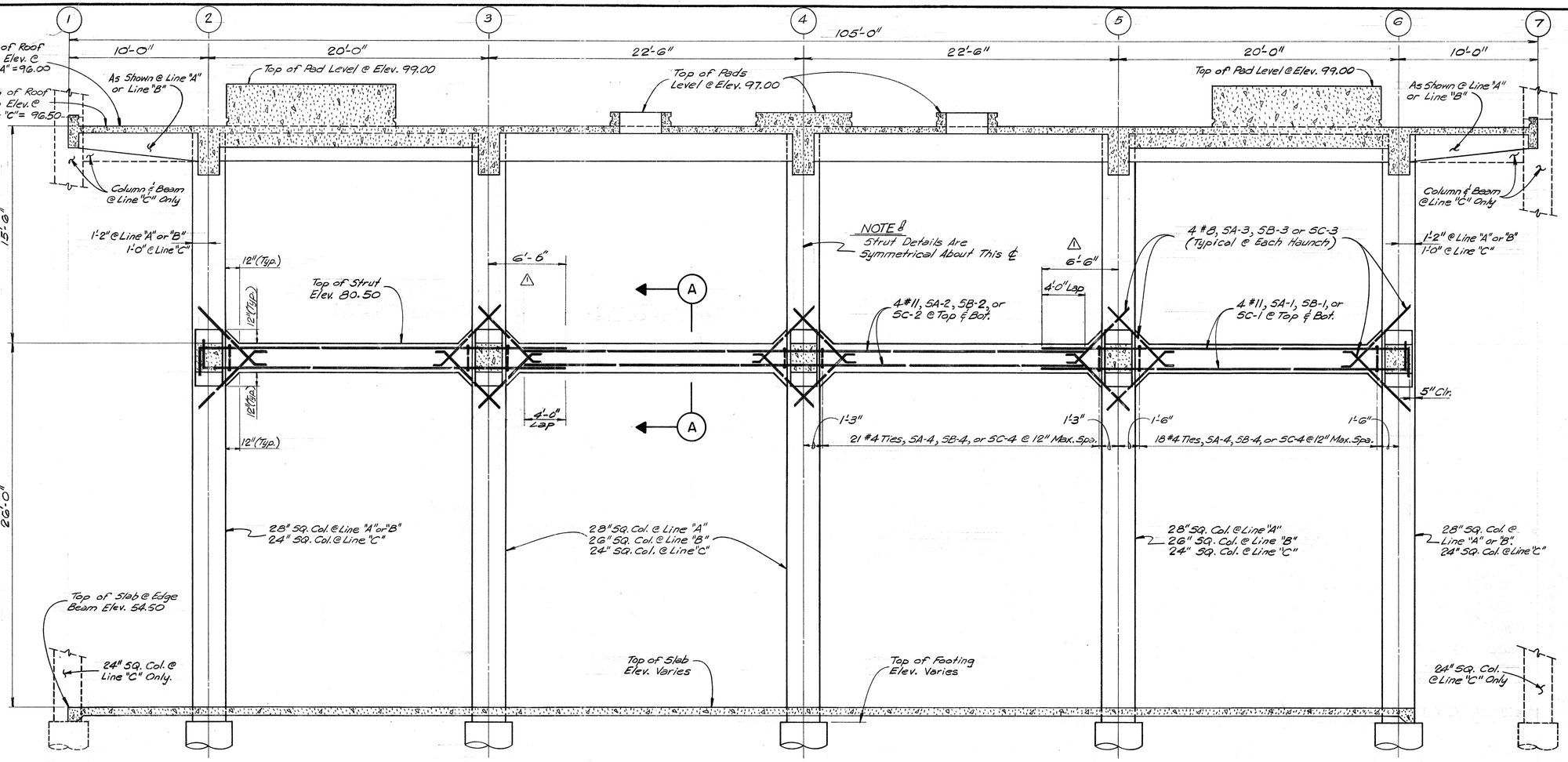

STRUT BEAM AT LINE "A", "B", or "C" (LINE "A" SHOWN)

Scale : 1/4" = 1'-0"

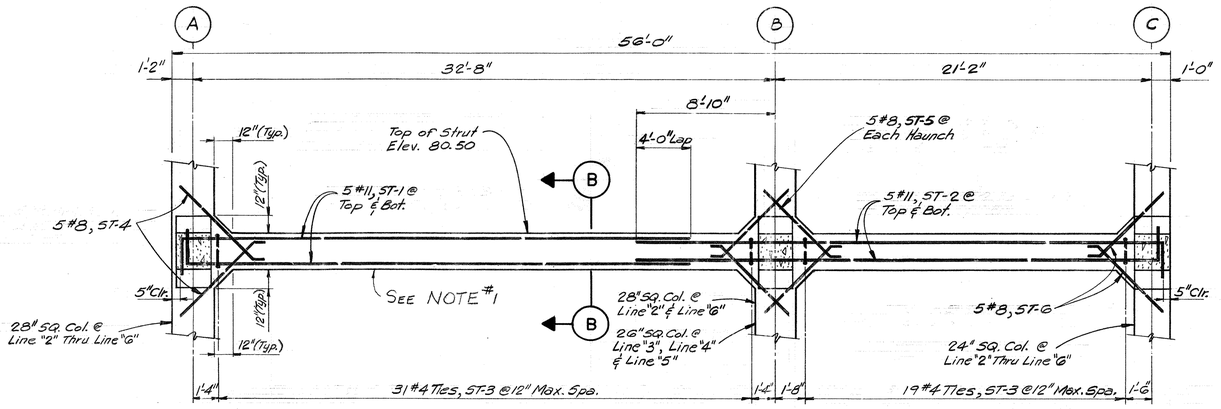

STRUT BEAM AT LINE "2", "3", "4", "5", or "6" (LINE "4" SHOWN.)

Scale : 1/4" = 1'-0"

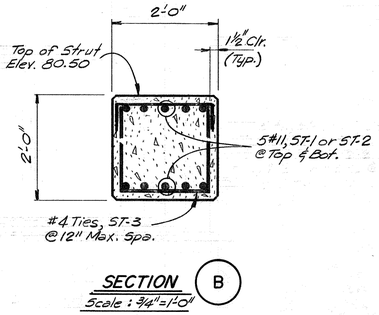

SECTION B

Scale : 3/4" = 1'-0"

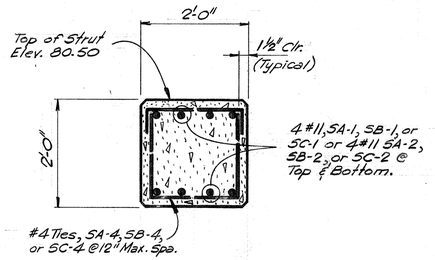

SECTION A

Scale : 3/4" = 1'-0"

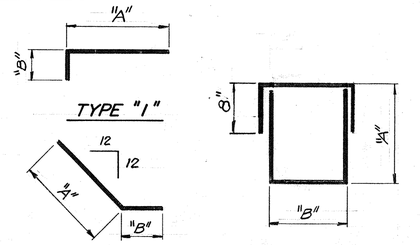

BENT BAR DETAILS

See Schedule For Dimensions

REINFORCING STEEL SCHEDULE FOR STRUT BEAMS

MARK	TYPE	SIZE	NO. REQD	LENGTH PER BAR	BENT BAR DIM. A	B
Strut Beam @ Line "A"						
SA-1	1	#11	16	28'-3"	26'-3"	2'-0"
SA-2	Str.	#11	8	40'-0"		
SA-3	2	#8	64	6'-8"	6'-2"	0'-6"
SA-4	3	#4	78	8'-4"	1'-9"	1'-9"
Strut Beam @ Line "B"						
SB-1	1	#11	16	28'-3"	26'-3"	2'-0"
SB-2	Str.	#11	8	40'-0"		
SB-3	2	#8	64	6'-6"	6'-0"	0'-6"
SB-4	3	#4	78	8'-4"	1'-9"	1'-9"
Strut Beam @ Line "C"						
SC-1	1	#11	16	28'-1"	26'-1"	2'-0"
SC-2	Str.	#11	8	40'-0"		
SC-3	2	#8	64	6'-4"	5'-10"	0'-6"
SC-4	3	#4	78	8'-4"	1'-9"	1'-9"
Strut Beams @ Line "2", "3", "4", "5" & "6"						
ST-1	1	#11	50	30'-7"	28'-7"	2'-0"
ST-2	1	#11	50	31'-7"	29'-7"	2'-0"
ST-3	3	#4	250	8'-4"	1'-9"	1'-9"
ST-4	2	#8	50	6'-8"	6'-2"	0'-6"
ST-5	2	#8	100	6'-6"	6'-0"	0'-6"
ST-6	2	#8	50	6'-4"	5'-10"	0'-6"

NOTE #1, ANCHOR BOLTS FOR CONNECTING WALKWAY FROM THE DRYER ROOM TO THE MATERIAL STORAGE BLDG. REQUIRED ON THE BEAM BETWEEN COL "A", & "B" AT COL LINE "2" @ ELE. 80.50, FOR EXACT NO. REQUIRED AND LOCATION, SEE CONTRACT C-2

REV. NO.	DATE	DESCRIPTION	DESIGN	CHECKED
⚠	3-77	General Modifications to Dimensions	J.C.S.	S.R.S.

CITY OF HOUSTON
DEPARTMENT OF PUBLIC WORKS

ALMEDA SIMS SLUDGE DISPOSAL PLANT—1973

DRYER ROOM.

STRUT BEAM DETAILS

RECOMMENDED FOR APPROVAL:
BINKLEY & HOLMES, INC., CONSULTING ENGINEERS

APPROVED:
CHIEF ENGINEER — ASST. CHIEF ENGINEER
ASST. DIRECTORS OF PUBLIC WORKS
DIRECTOR OF PUBLIC WORKS

DESIGNED BY: V. Jafri
DRAWN BY: G. McVicar
CHECKED BY: M. P. J. & S.E.S.
SCALE: As Shown
DATE: Dec., 1973
SHEET 82 OF 200 SHEETS
DRAWING NO. 18045

Note:
Staircase Structural Detail
See Sht. 106

8" Curb-For Steel See Sht. No. 88

8" Curb

Center Mast

Raised Platform For Material Hoist.

℄ Cage Mill

℄ Vapor Fan And Furnace

℄ Cage Mill & Preheater

Add 3-#4, RS-17 @ Bott. Of 6" Slab & Top Of Raised Slab ~ 5 Sides

#4, RS-19 @ 12" Max. Spac. - Each Way

3-#4, RS-19 @ Top & Bott. 10" Slab Four Sides

℄ Mast Fdn. & Beam

℄ Cyclone

℄ Monorail (See Sheet 74)

℄ Cyclone & Ladder Base

T.O.C. EL. 97.00

℄ Multiclone

℄ I.D. FAN

Elevator Opening

B-16 (12" X 18") See SHT. 88

Elevator Opening (5'9" X 8'4") See SHT. 100 & 101

1'-0" Curb For Steel See Sht. No. 88

Columns Come Thru For Truss @ Filter Room

℄ Beam

ROOF PLAN

Scale: 1/4" = 1'-0"

Notes:
1. For Handrail & Curb Details See Sht. No. 92 & Sht. No. 93
2. For Elevator Details See Sht. No. 100 & 101

REV. NO.	DATE	DESCRIPTION	DESIGNED	CHECKED
2	6-77	Rev. Elevator	J.C.S.	K.R.L.
1	3-77	General Modifications & Multiclone, & I.D. Fan added	J.C.S.	S.E.S.

JAMES A. BINKLEY — 14262 — STATE OF TEXAS — REGISTERED PROFESSIONAL ENGINEER

PAUL R. HOLMES — 27038 — STATE OF TEXAS — REGISTERED PROFESSIONAL ENGINEER

CITY OF HOUSTON
DEPARTMENT OF PUBLIC WORKS

ALMEDA SIMS
SLUDGE DISPOSAL
PLANT—1973

DRYER ROOM
STRUCTURAL DETAILS
ROOF PLAN

RECOMMENDED FOR APPROVAL:
BINKLEY & HOLMES, INC., CONSULTING ENGINEERS

APPROVED:
CHIEF ENGINEER — ASST. CHIEF ENGINEER
ASST. DIRECTORS OF PUBLIC WORKS
DIRECTOR OF PUBLIC WORKS

DESIGNED BY: V. Jaeri
DRAWN BY: E.N. SMITH & G.McVicar
CHECKED BY: M.O.J.
SCALE: 1/4"=1'0" S.E.S.
DATE: Dec., 1973
SHEET 83 OF 200 SHEETS
DRAWING NO. 16045

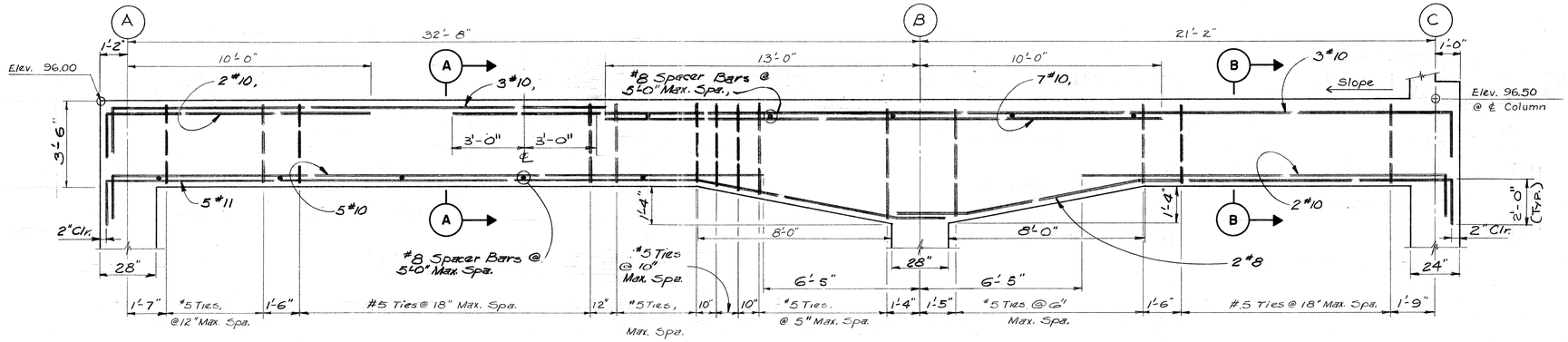

ELEVATION GIRDER G-1

2- Required
Scale: 3/8"=1'-0"

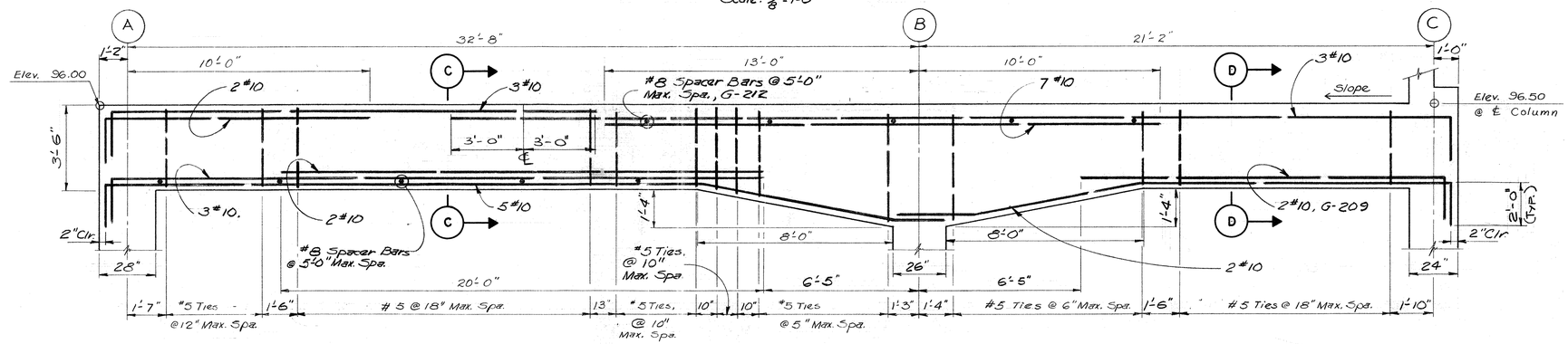

ELEVATION GIRDER G-2

2- Required
Scale: 3/8"=1'-0"

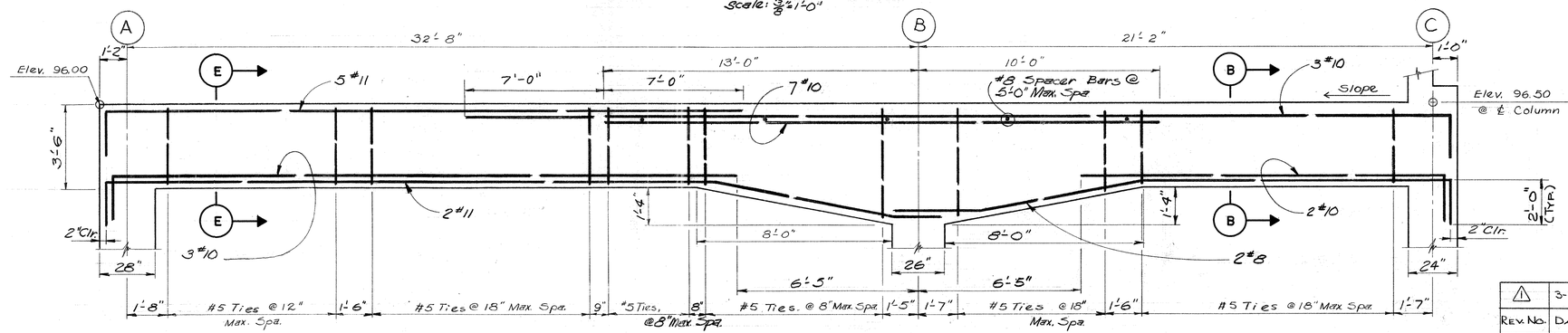

ELEVATION GIRDER G-3

1- Required
Scale: 3/8"=1'-0"

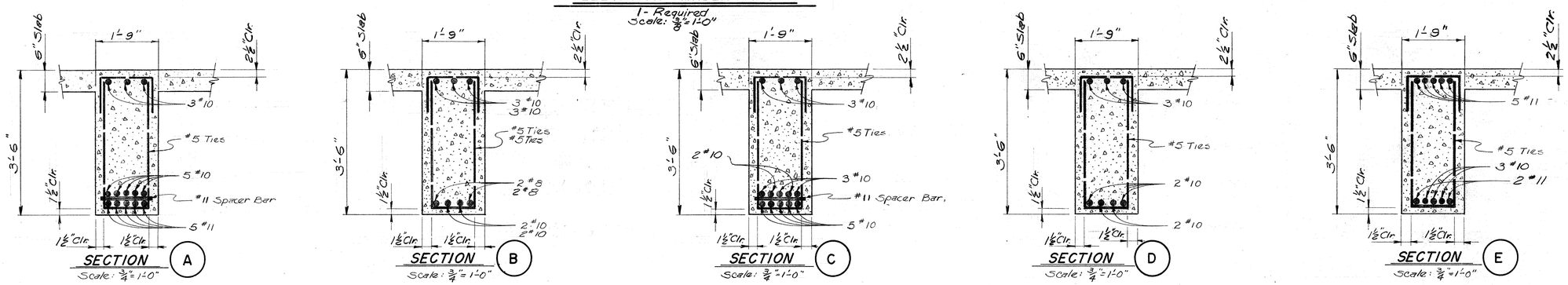

Rev. No.	Date	Description	Design	Checked
1	3-77	Bar Schedule Deleted & Dimensions Modified	J. C.S	S.R.S.

CITY OF HOUSTON
DEPARTMENT OF PUBLIC WORKS

ALMEDA SIMS
SLUDGE DISPOSAL
PLANT – 1973

DRYER ROOM
ROOF GIRDERS
G-1, G-2, & G-3

RECOMMENDED FOR APPROVAL:
BINKLEY & HOLMES, INC., CONSULTING ENGINEERS

APPROVED:
CHIEF ENGINEER — ASST. CHIEF ENGINEER
ASST. DIRECTORS OF PUBLIC WORKS
DIRECTOR OF PUBLIC WORKS

DESIGNED BY: V. Jaeri
DRAWN BY: E.N. Smith
CHECKED BY: M.B.J. & S.R.S.
SCALE: As Shown
DATE: Dec., 1973
SHEET 84 OF 200 SHEETS
DRAWING NO. 18045

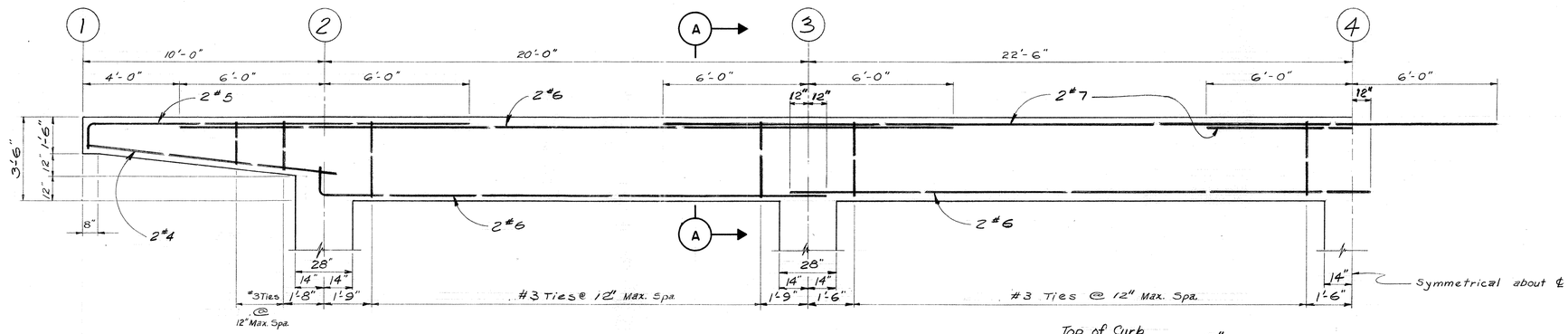

ELEVATION BEAM B-1

1- Required
Scale: 3/8"=1'-0"

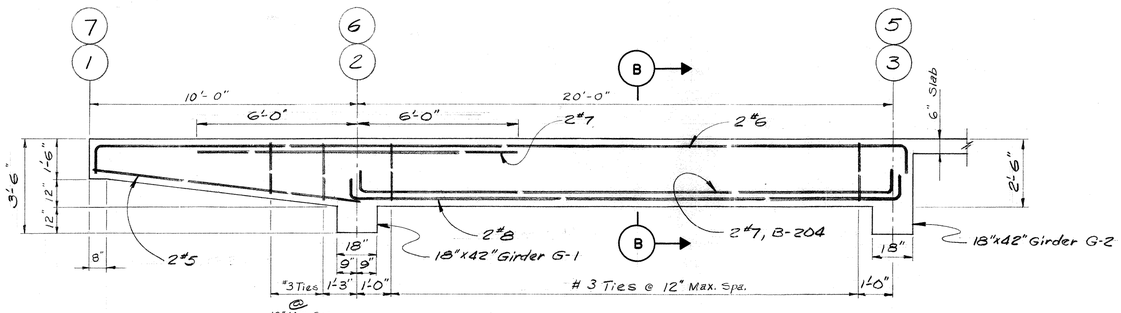

ELEVATION BEAM B-2

2- Required
Scale: 3/8"=1'-0"

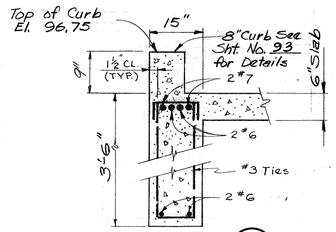

SECTION A

Scale: 3/4"=1'-0"

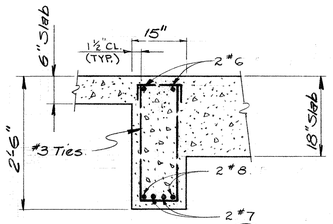

SECTION B

Scale: 3/4"=1'-0"

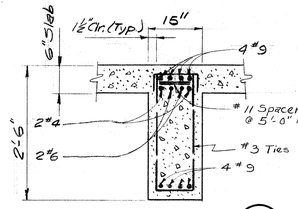

SECTION C

Scale: 3/4"=1'-0"

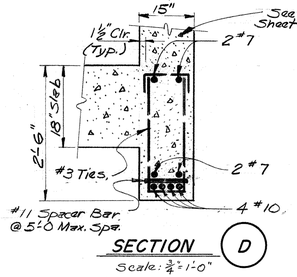

SECTION D

Scale: 3/4"=1'-0"

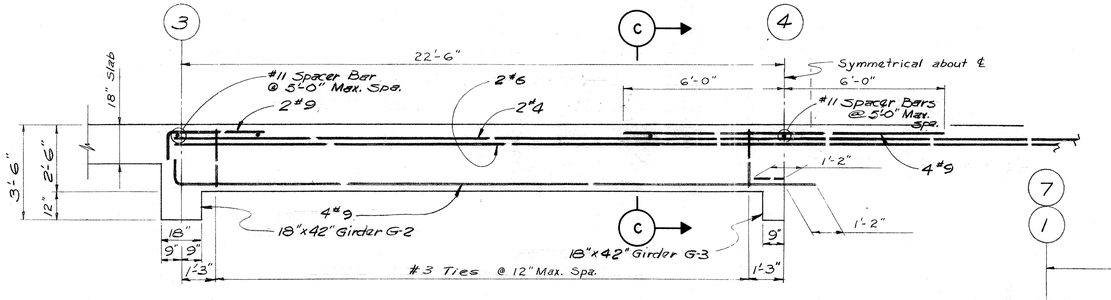

ELEVATION BEAM B-3

1- Required
Scale: 3/8"=1'-0"

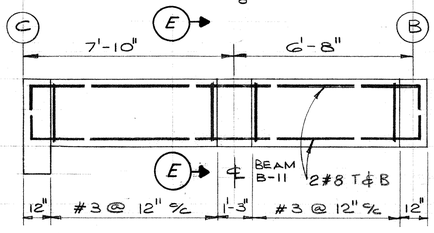

ELEVATION BEAM B'-11

Scale: 3/8"=1'-0" 2-REQ'D.

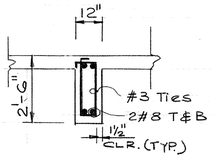

SECTION E

Scale: 3/8"=1'-0"

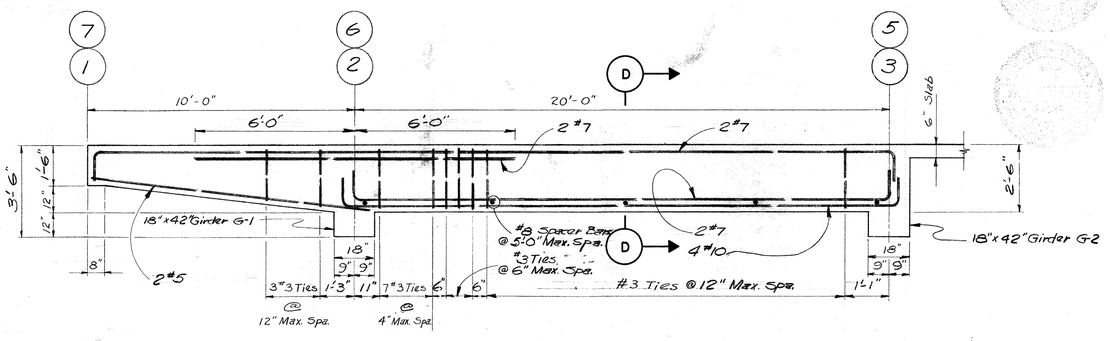

ELEVATION BEAM B-4

2- Required
Scale: 3/8"=1'-0"

REV. No.	DATE	DESCRIPTION	DESIGN	CHECKED
1	3-77	BEAM B'-11 ADDED & BAR SCHEDULE DELETED & DIMENSIONS MODIFIED	J.C.S	S.R.S.

CITY OF HOUSTON
DEPARTMENT OF PUBLIC WORKS

ALMEDA SIMS
SLUDGE DISPOSAL
PLANT—1973

DRYER ROOM
ROOF BEAMS
B-1, B-2, B-3, & B-4

RECOMMENDED FOR APPROVAL:
BINKLEY & HOLMES, INC., CONSULTING ENGINEERS

APPROVED:
CHIEF ENGINEER — ASST. CHIEF ENGINEER
ASST. DIRECTORS OF PUBLIC WORKS
DIRECTOR OF PUBLIC WORKS

DESIGNED BY: V. Tapia
DRAWN BY: E.N. Smith
CHECKED BY: M.D.J. & S.E.S.
SCALE: As Shown
DATE: Dec. 1973
SHEET 85 OF 200 SHEETS
DRAWING NO. 18045

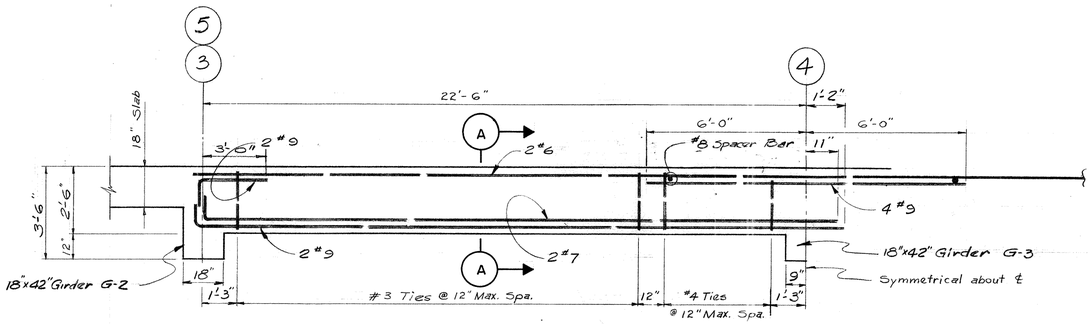

ELEVATION BEAM B-5

1- Required

Scale: 3/8"=1'-0"

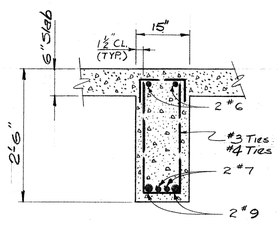

SECTION A

Scale: 3/4"=1'-0"

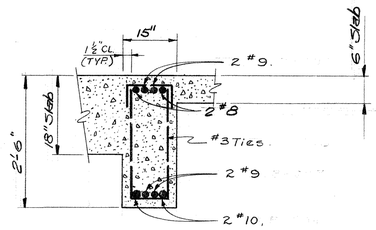

SECTION B

Scale: 3/4"=1'-0"

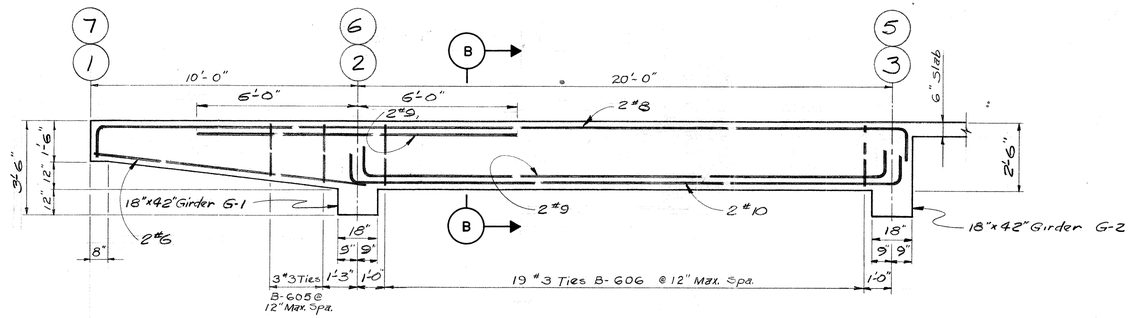

ELEVATION BEAM B-6

2- Required

Scale: 3/8"=1'-0"

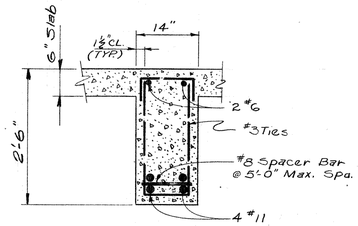

SECTION C

Scale: 3/4"=1'-0"

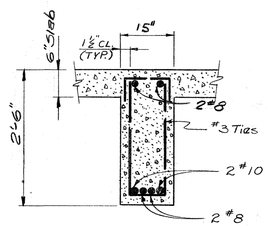

SECTION D

Scale: 3/4"=1'-0"

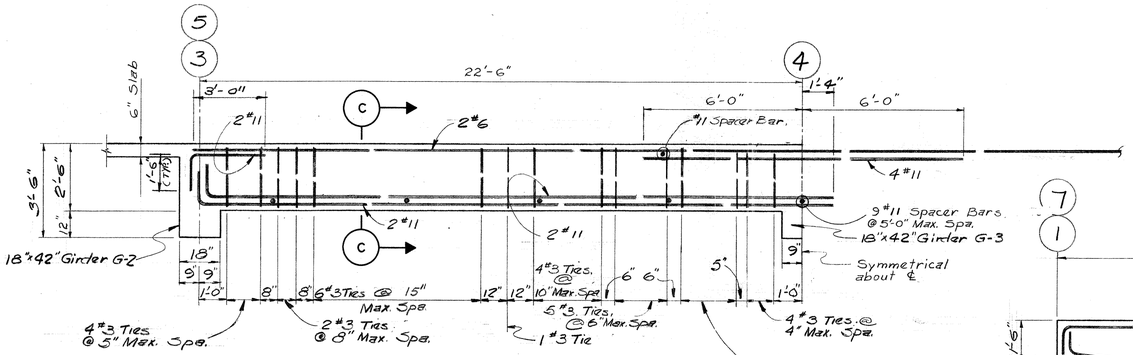

ELEVATION BEAM B-7

1- Required

Scale: 3/8"=1'-0"

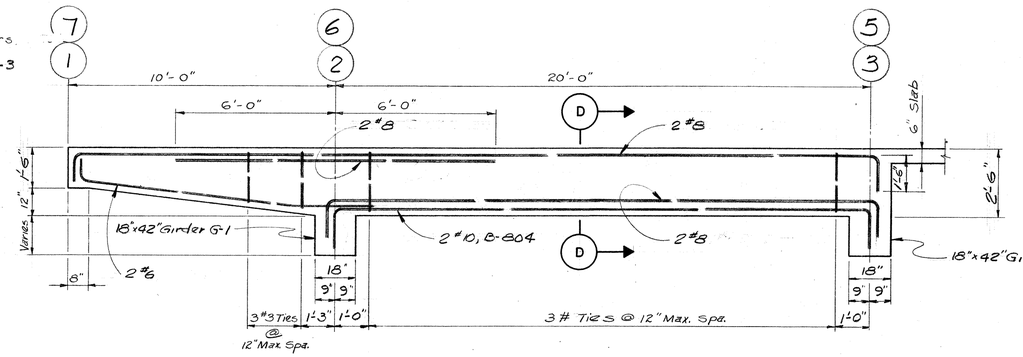

ELEVATION BEAM B-8

2- Required

Scale: 3/8"=1'-0"

REV. NO.	DATE	DESCRIPTION	DESIGN	CHECKED
1	3-77	BAR SCHEDULE DELETED & DIMENSIONS MODIFIED	JCS	SRS

CITY OF HOUSTON
DEPARTMENT OF PUBLIC WORKS

ALMEDA SIMS
SLUDGE DISPOSAL
PLANT—1973

DRYER ROOM
ROOF BEAMS
B-5, B-6, B-7, & B-8

RECOMMENDED FOR APPROVAL:
BINKLEY & HOLMES, INC., CONSULTING ENGINEERS

APPROVED:
CHIEF ENGINEER — ASST. CHIEF ENGINEER
ASST. DIRECTORS OF PUBLIC WORKS
DIRECTOR OF PUBLIC WORKS

DESIGNED BY: V. Jaffi
DRAWN BY: E-N. Smith
CHECKED BY: M.B.J.
SCALE: As Shown
DATE: Dec., 1973
SHEET 86 OF 200 SHEETS
DRAWING NO. 18045

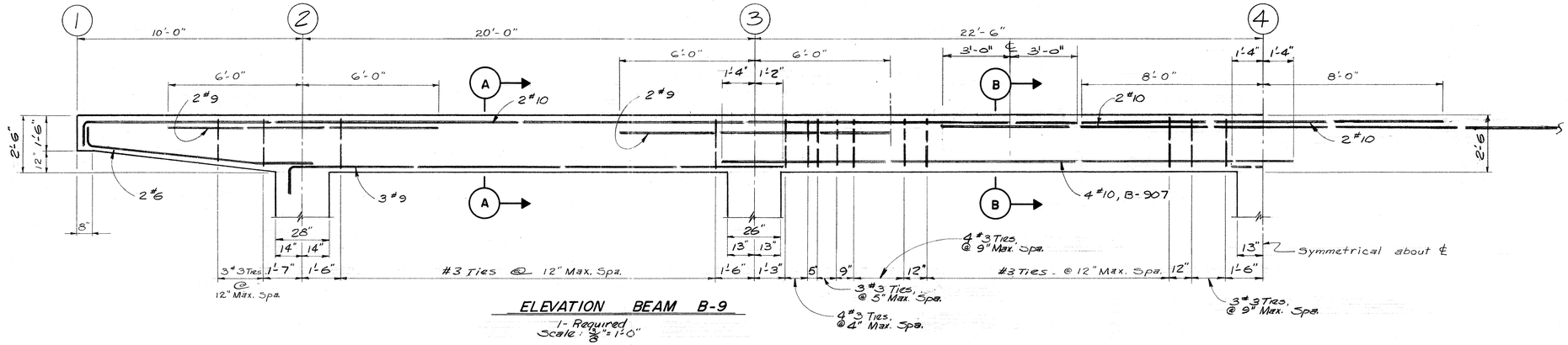

ELEVATION BEAM B-9

1- Required
Scale: 3/8"=1'-0"

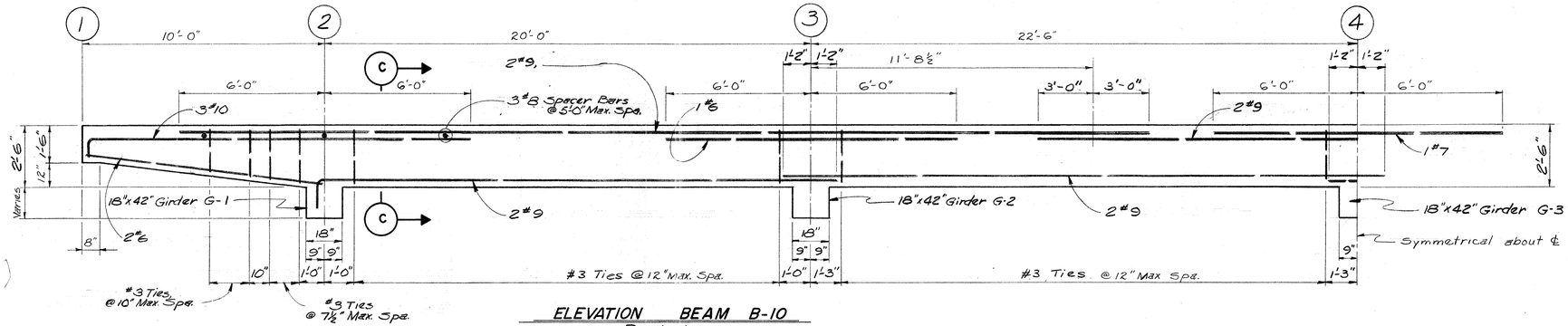

ELEVATION BEAM B-10

1- Required
Scale: 3/8"=1'-0"

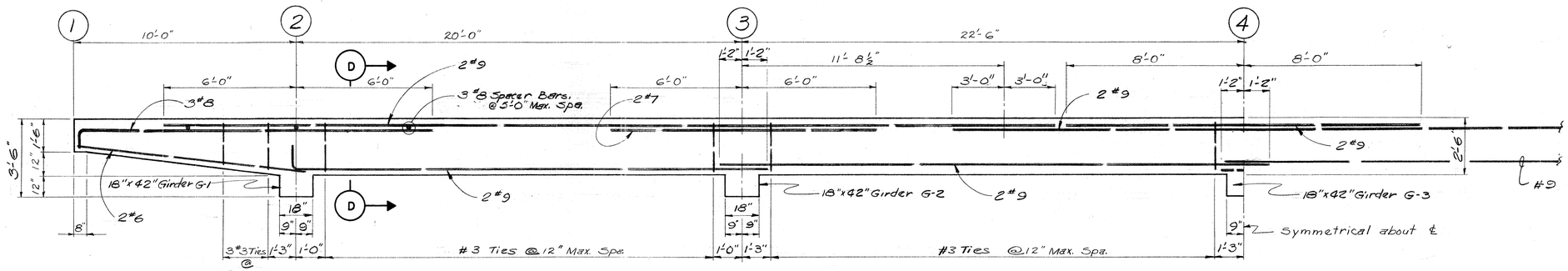

ELEVATION BEAM B-11

1- Required
Scale: 3/8"=1'-0"

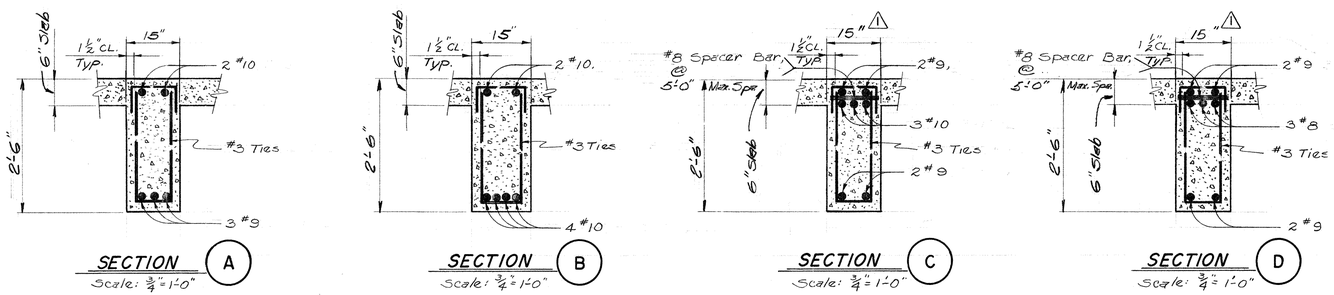

Rev. No.	Date	Description	Designed	Checked
1	3-77	Beams B10 & B-11 Sizes Modified & Steel Schedule Deleted	J.C.S	S.P.S.

CITY OF HOUSTON
DEPARTMENT OF PUBLIC WORKS

ALMEDA SIMS
SLUDGE DISPOSAL
PLANT—1973

DRYER ROOM
ROOF BEAMS
B-9, B-10, & B-11

RECOMMENDED FOR APPROVAL:
BINKLEY & HOLMES, INC., CONSULTING ENGINEERS

APPROVED:
CHIEF ENGINEER
ASST. CHIEF ENGINEER
ASST. DIRECTORS OF PUBLIC WORKS
DIRECTOR OF PUBLIC WORKS

DESIGNED BY: V. Jafri
DRAWN BY: E.N. Smith
CHECKED BY: M.D.J. & S.R.S.
SCALE: As Shown
DATE: Dec., 1973
SHEET 87 OF 200 SHEETS
DRAWING NO. 18045

REV. NO.	DATE	DESCRIPTION	DESIGN	CHECKED
1	3-77	General Modifications & Bar Schedule Deleted	J.C.S.	S.R.S.

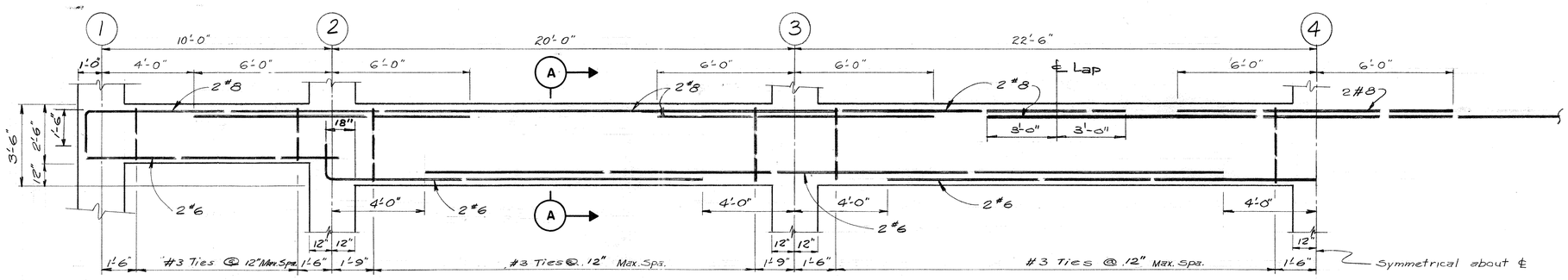

ELEVATION BEAM B-12

1- Required
Scale: 3/8"=1'-0"

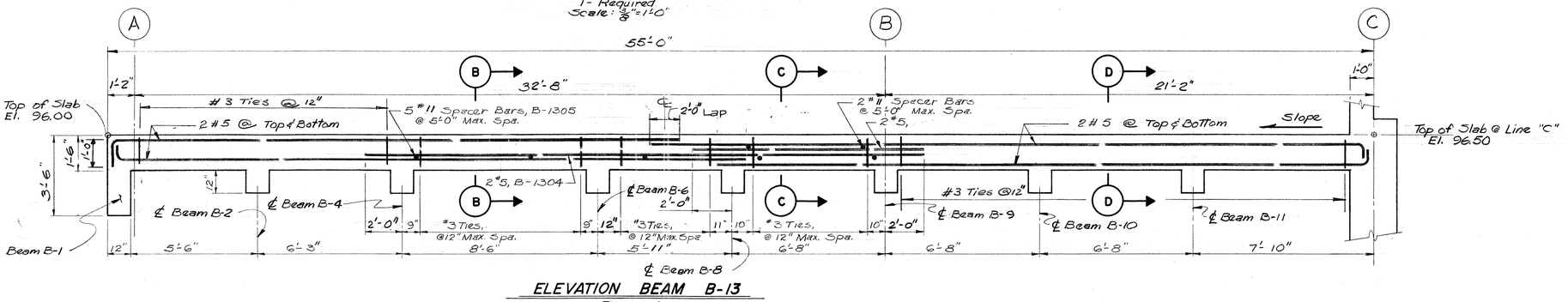

ELEVATION BEAM B-13

2- Required
Scale: 3/8"=1'-0"

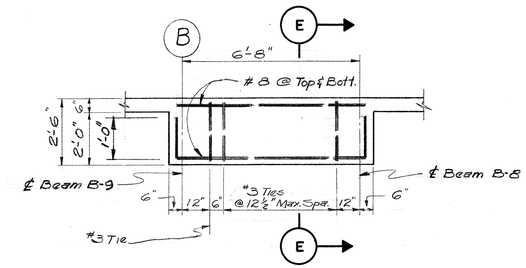

ELEVATION BEAM B-14

2- Required
Scale: 3/8"=1'-0"

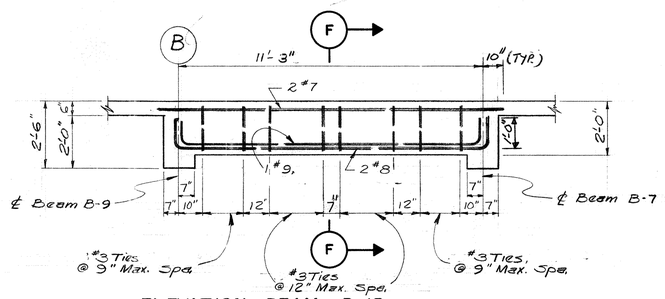

ELEVATION BEAM B-15

2- Required
Scale: 3/8"=1'-0"

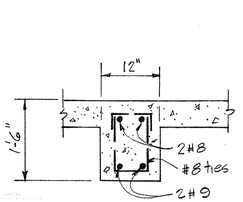

SECTION G

SCALE: 3/4"=1'-0"

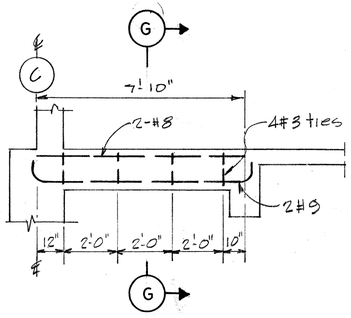

ELEVATION BEAM B-16

(1 REQD.) SCALE 3/8"=1'-0"
See Section (K) on Sht. No. 91 for Details of Roof Pad.

SECTION A

Scale: 3/4"=1'-0"

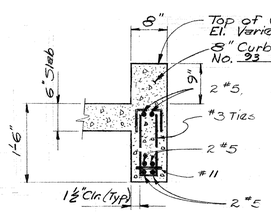

SECTION B

Scale: 3/4"=1'-0"

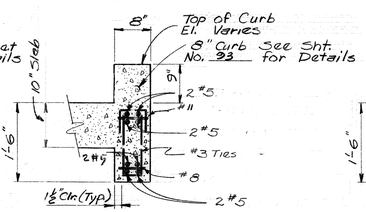

SECTION C

Scale: 3/4"=1'-0"

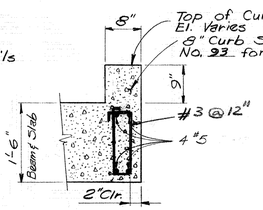

SECTION D

Scale: 3/4"=1'-0"

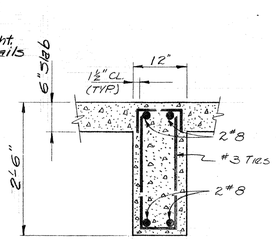

SECTION E

Scale: 3/4"=1'-0"

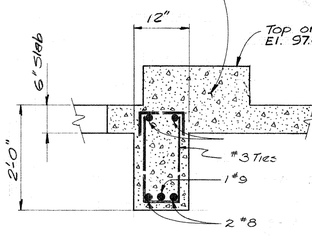

SECTION F

Scale: 3/4"=1'-0"

CITY OF HOUSTON
DEPARTMENT OF PUBLIC WORKS

ALMEDA SIMS
SLUDGE DISPOSAL
PLANT — 1973

DRYER ROOM
ROOF BEAMS
B-12, B-13, B-14, B-15 & B-16

RECOMMENDED FOR APPROVAL:
BINKLEY & HOLMES, INC., CONSULTING ENGINEERS

APPROVED:
CHIEF ENGINEER
ASST. CHIEF ENGINEER
ASST. DIRECTORS OF PUBLIC WORKS
DIRECTOR OF PUBLIC WORKS

DESIGNED BY: V. J. Jary
DRAWN BY: E. N. Smith
CHECKED BY: M B J & S. R. S.
SCALE: As Shown
DATE: Dec., 1973
SHEET 88 OF 200 SHEETS
DRAWING NO. 18045

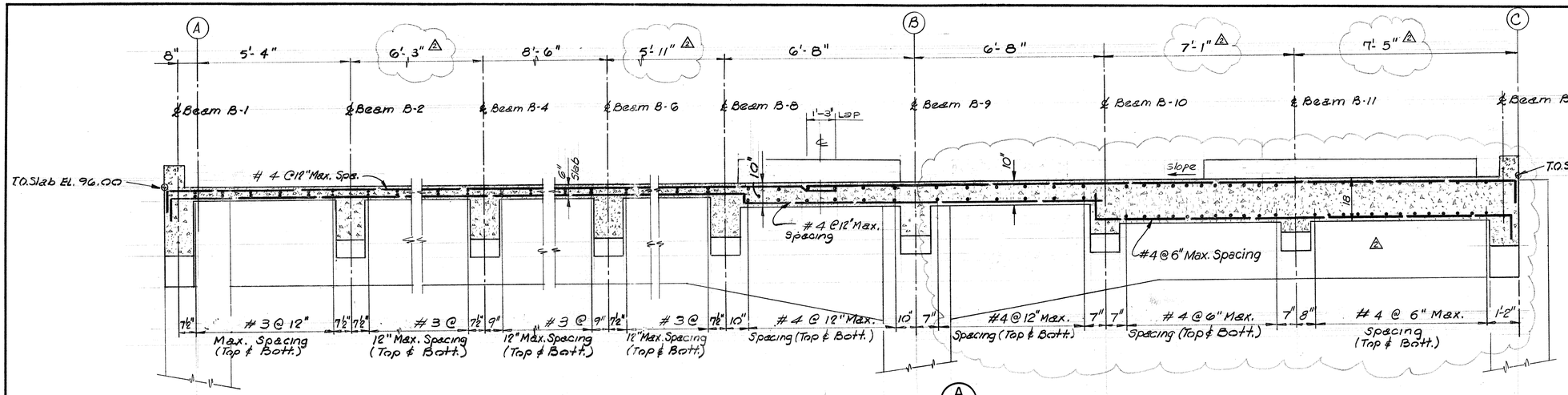

SECTION (A/B9)

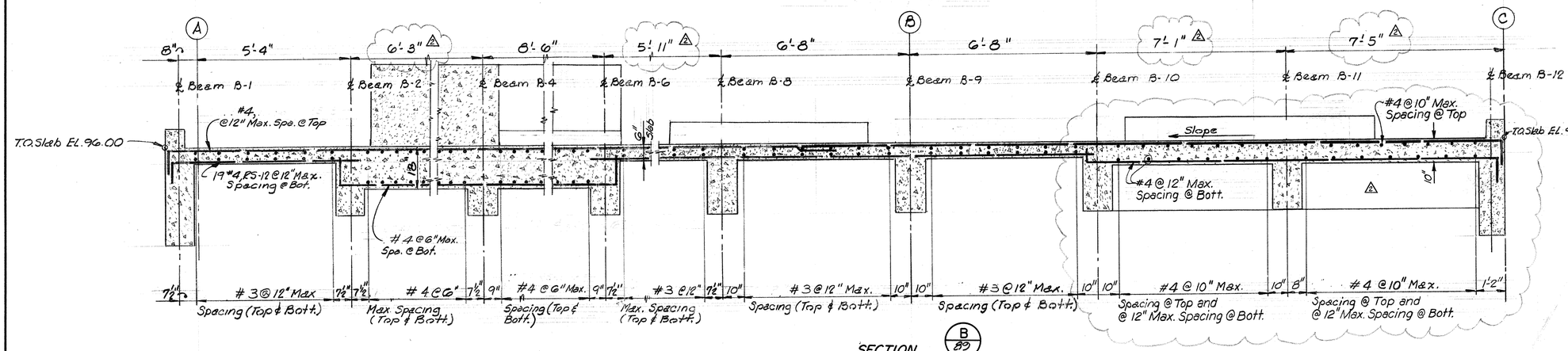

SECTION (B/B9)

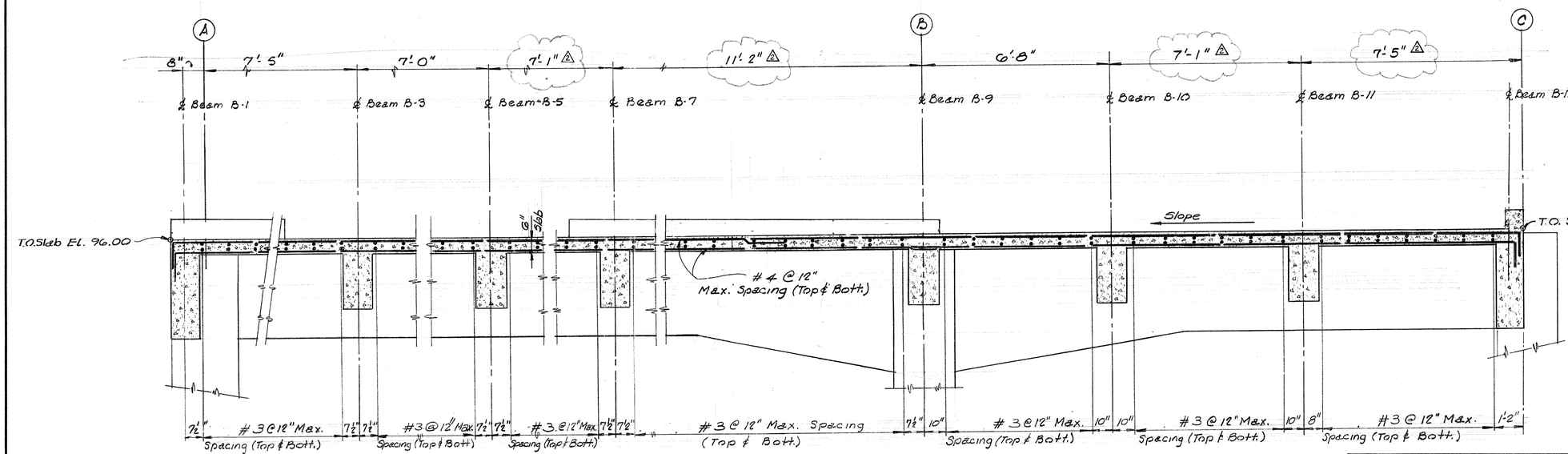

SECTION (C/B9)

TYPE "1"

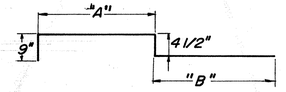

TYPE "3"

BENT BAR DETAILS

Rev. No.	Date	Description	Design	Checked
2	8-79	Changed Roof Slab Sections to agree w/ Roof Plan (Dwg. #83)	H.J.K.	K.R.L.
1	3-77	Bar Schedule Deleted & General Modifications	J.C.S.	S.R.S.

CITY OF HOUSTON
DEPARTMENT OF PUBLIC WORKS

ALMEDA SIMS
SLUDGE DISPOSAL
PLANT – 1973

DRYER ROOM
STRUCTURAL DETAILS

ROOF SLAB SECTIONS

RECOMMENDED FOR APPROVAL:
BINKLEY & HOLMES, INC., CONSULTING ENGINEERS

APPROVED:
CHIEF ENGINEER
ASST. CHIEF ENGINEER
ASST. DIRECTORS OF PUBLIC WORKS
DIRECTOR OF PUBLIC WORKS

DESIGNED BY: V. Jafri
DRAWN BY: G.T. RYAN
CHECKED BY: M.B.J. & S.R.S.
SCALE: 1/2" = 1'-0"
DATE: Dec., 1973
SHEET 89 OF 200 SHEETS
DRAWING NO. 18045

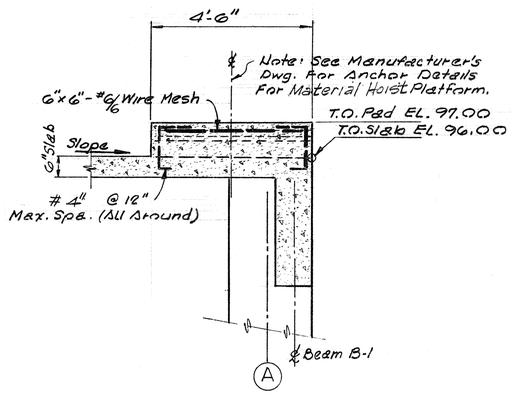

SECTION D/90
Scale: 1/2"=1'-0"

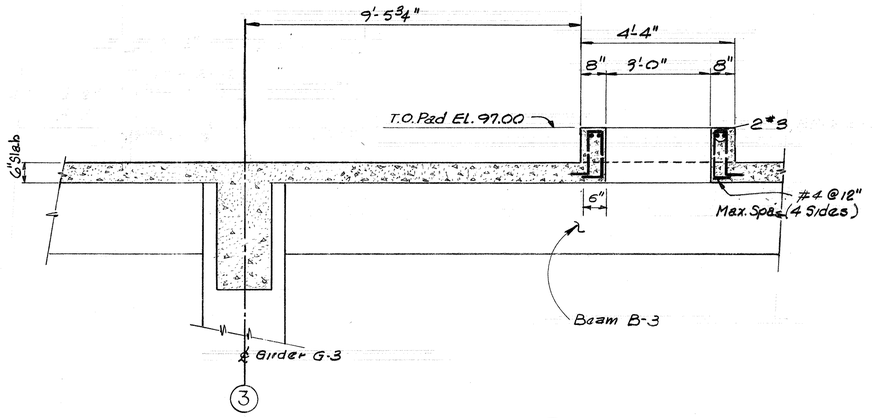

SECTION E/90
Scale: 1/2"=1'-0"

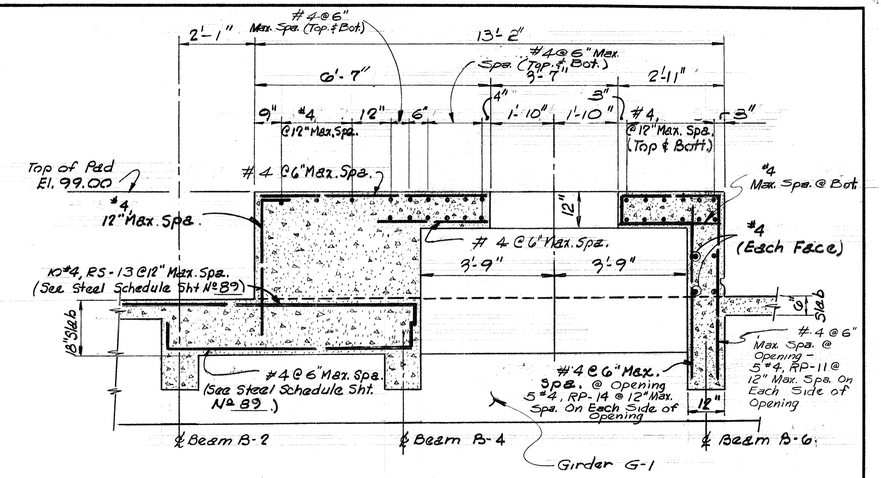

SECTION F/90
Scale: 1/2"=1'-0"

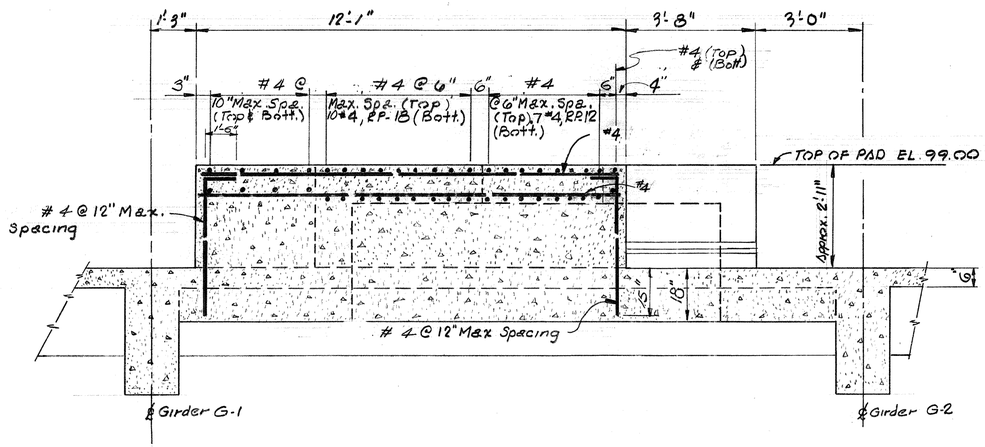

SECTION G/90
Scale: 1/2"=1'-0"

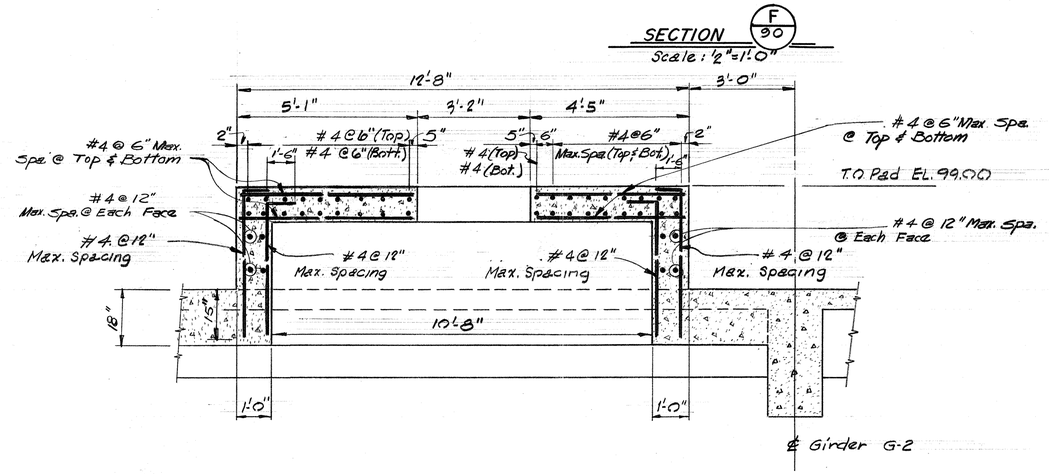

SECTION H/90
Scale: 1/2"=1'-0"

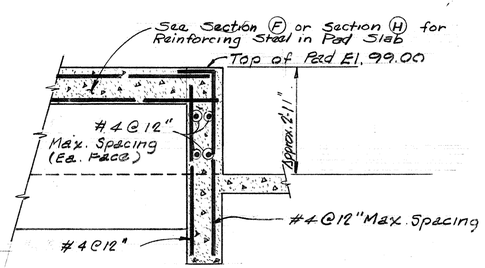

SECTION J/90
Scale: 1/2"=1'-0"

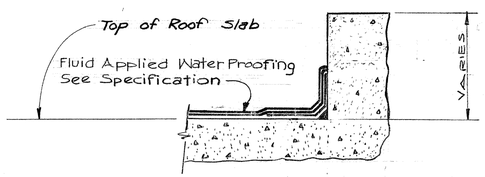

TYPICAL SECTION FOR FLASHING AT ALL RAISED ROOF SECTIONS
Scale: 1 1/2"=1'-0"

REV. NO.	DATE	DESCRIPTION	DESIGN	CHECKED
1	3-77	Roof Section Changed & Bar Mark No. Deleted From All Sections	J.C.S.	S.R.S.

CITY OF HOUSTON
DEPARTMENT OF PUBLIC WORKS

ALMEDA SIMS SLUDGE DISPOSAL PLANT – 1973

DRYER ROOM

ROOF PAD SECTIONS

RECOMMENDED FOR APPROVAL:
BINKLEY & HOLMES, INC., CONSULTING ENGINEERS

APPROVED:
CHIEF ENGINEER — ASST. CHIEF ENGINEER
ASST. DIRECTORS OF PUBLIC WORKS
DIRECTOR OF PUBLIC WORKS

DESIGNED BY: V. Jaeri
DRAWN BY: G.T. RYAN
CHECKED BY: M. B. J.
SCALE: As Shown
DATE: Dec. 1973
SHEET 90 OF 200 SHEETS
DRAWING NO. 10845

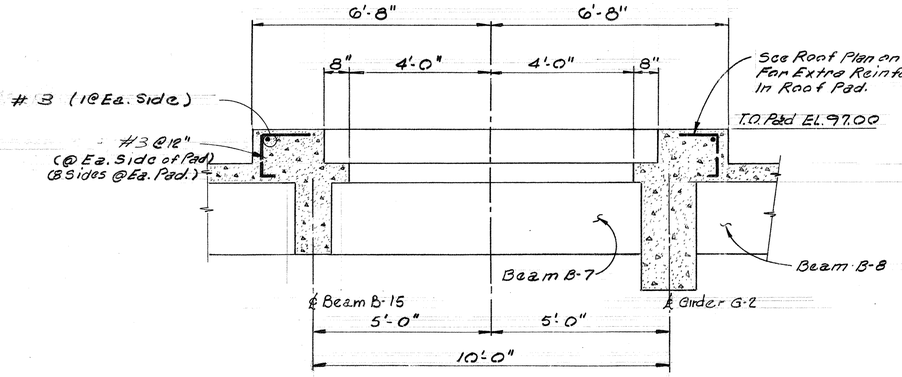

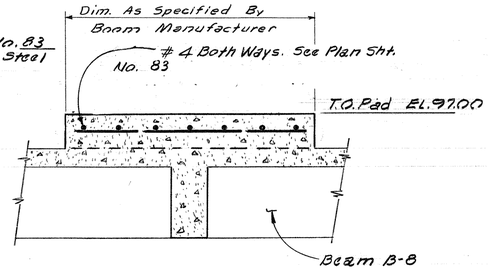

SECTION K/91

Scale: 1/2"=1'-0"

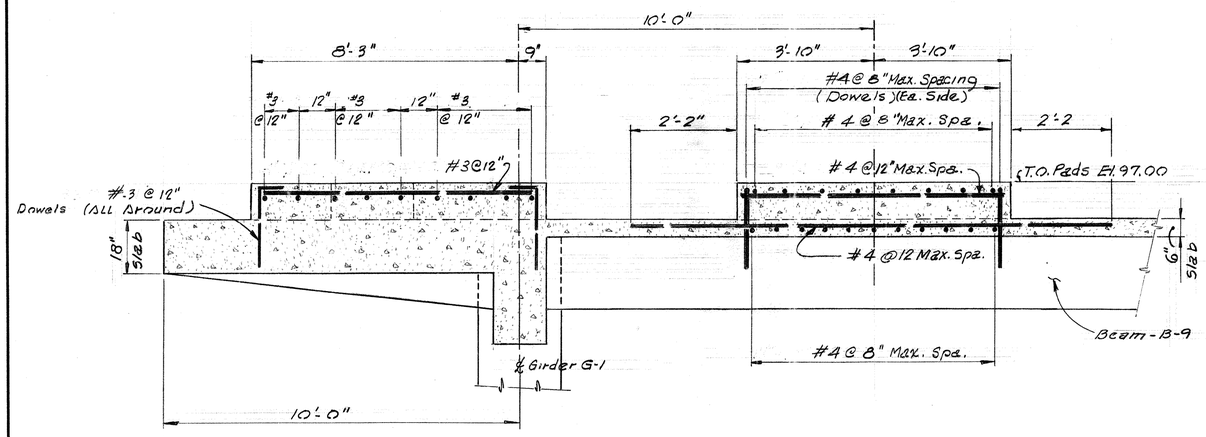

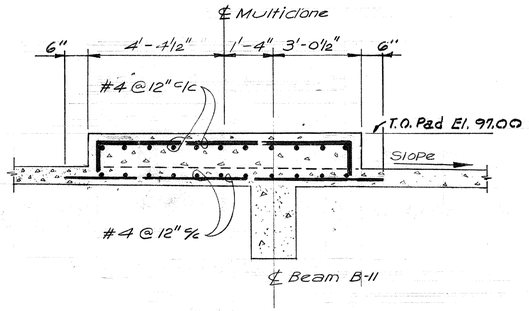

SECTION L/91

Scale: 1/2"=1'-0"

SECTION M/91 ⚠

N.T.S.

SECTION N/91

Scale: 1/2"=1'-0"

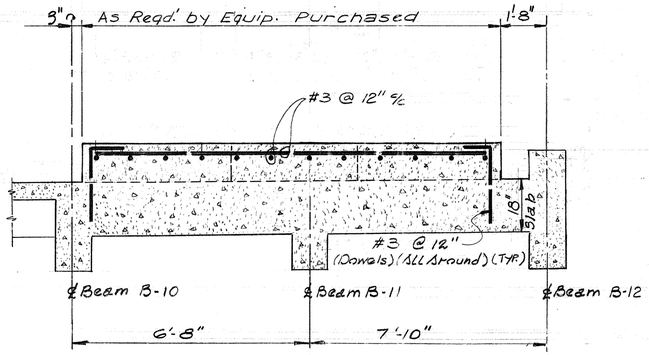

SECTION P/91 ⚠

N.T.S.

REV. NO.	DATE	DESCRIPTION	DESIGN	CHECKED
⚠	3-77	Sections 'P' & 'M' Modified & Bar Schedule Deleted	J.C.S	S.R.S.

CITY OF HOUSTON
DEPARTMENT OF PUBLIC WORKS

ALMEDA SIMS
SLUDGE DISPOSAL
PLANT - 1973

DRYER ROOM

ROOF PAD SECTIONS

RECOMMENDED FOR APPROVAL:
BINKLEY & HOLMES, INC., CONSULTING ENGINEERS

APPROVED:
CHIEF ENGINEER — ASST. CHIEF ENGINEER
ASST. DIRECTORS OF PUBLIC WORKS
DIRECTOR OF PUBLIC WORKS

DESIGNED BY: V. Jafri
DRAWN BY: G.T.RYAN
CHECKED BY: M.B.J. & S.R.S.
SCALE: As Shown
DATE: Dec., 1973
SHEET 91 OF 200 SHEETS
DRAWING NO. 18045

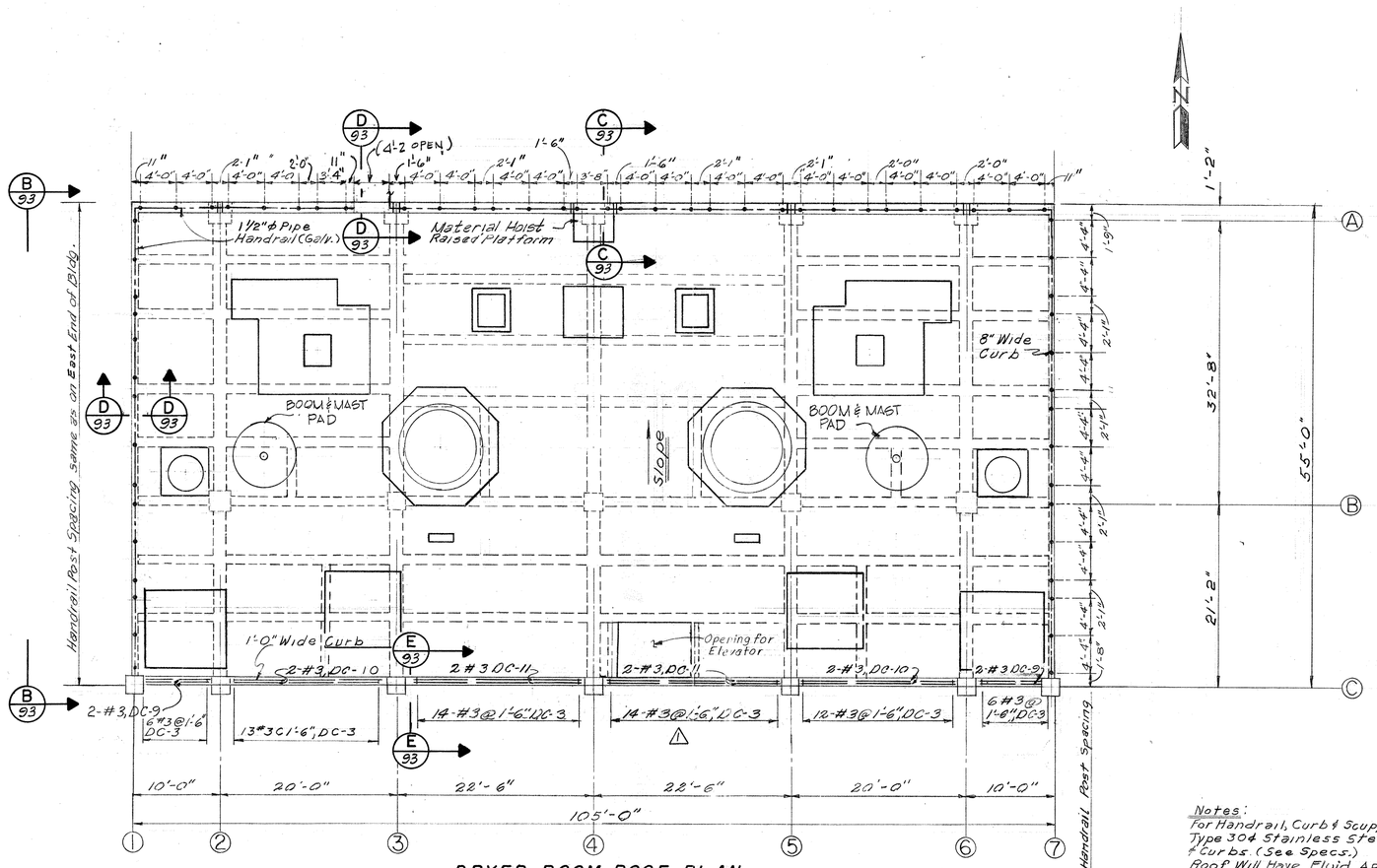

DRYER ROOM ROOF PLAN

SHOWING HANDRAIL POST SPACING

Scale: 1/8"=1'-0"

Notes:
For Handrail, Curb & Scupper Details See Sht. 93
Type 304 Stainless Steel Flashing Around All Pads
8" Curbs (See Specs.)
Roof Will Have Fluid Applied Water Proofin (See Specs.)
For Curb Steel See Steel Schedule, Sht. 93

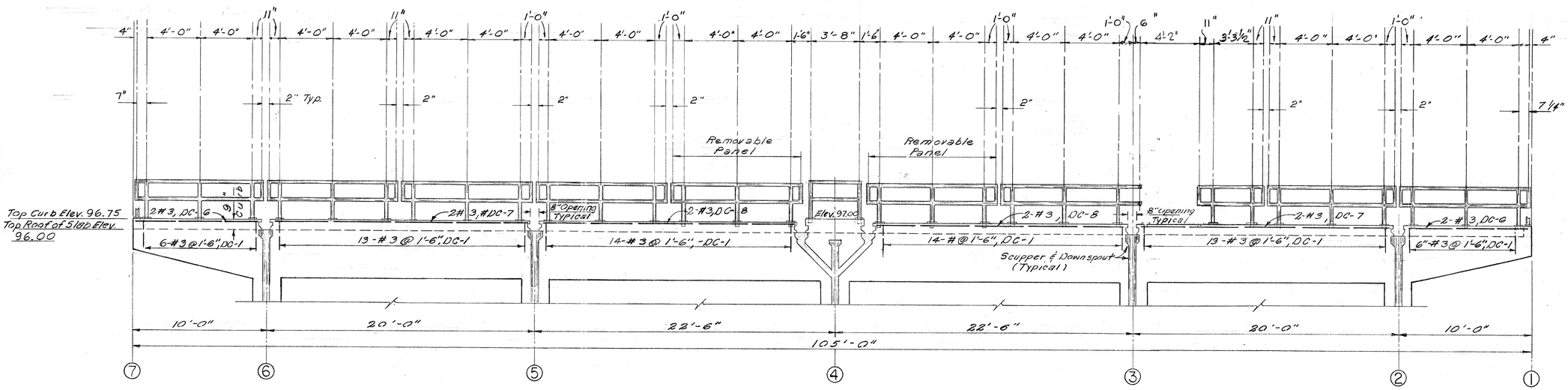

NORTH ELEVATION

Scale: 1/4"=1'-0"

Rev. No.	Date	Description	Designed	Checked
1	6-77	Rev. Elevator	J.C.S	K.R.L.

CITY OF HOUSTON
DEPARTMENT OF PUBLIC WORKS

ALMEDA SIMS SLUDGE DISPOSAL PLANT - 1973

DRYER ROOM
ROOF CURB & HANDRAIL
PLAN, ELEVATION & DETAILS

RECOMMENDED FOR APPROVAL:
BINKLEY & HOLMES, INC., CONSULTING ENGINEERS

APPROVED:
CHIEF ENGINEER — ASST. CHIEF ENGINEER
ASST. DIRECTORS OF PUBLIC WORKS
DIRECTOR OF PUBLIC WORKS

DESIGNED BY: V. Jafri
DRAWN BY: I. Gonzalez
CHECKED BY: M.B.J.
SCALE: As Shown
DATE: Dec. 1973
SHEET 92 OF 200 SHEETS
DRAWING NO. 18045

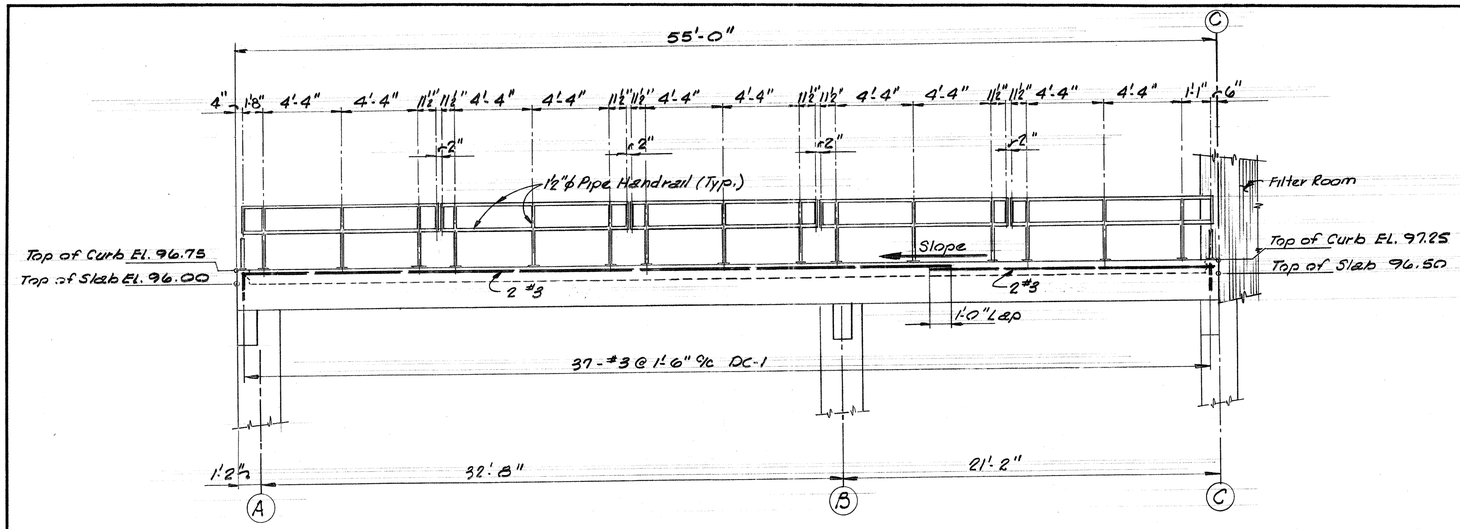

SECTION B / 93
Scale : ¼" = 1'-0"

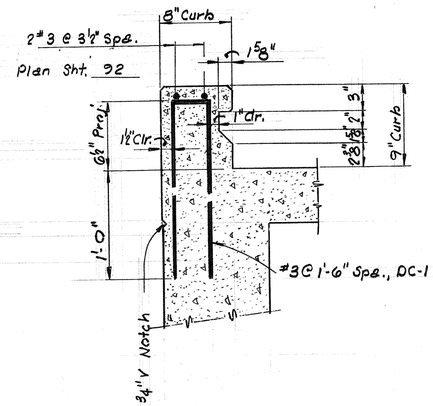

SECTION D / 93
Scale : 1½" = 1'-0"

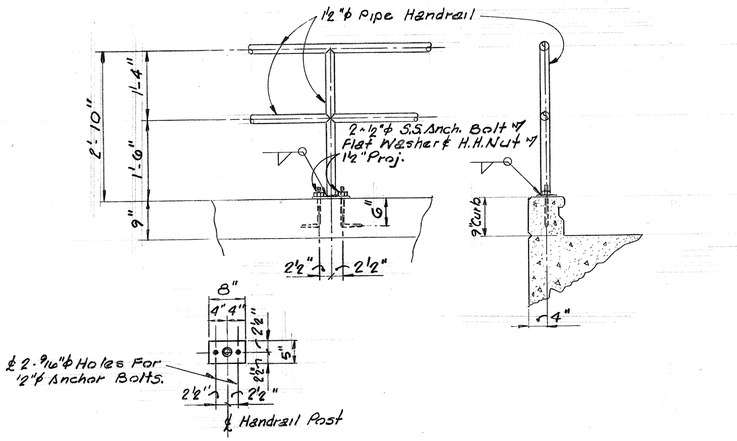

DETAILS OF STANDARD HANDRAIL POST, BASE PLATE AND ANCHOR BOLTS
Scale : ¾" = 1'-0"

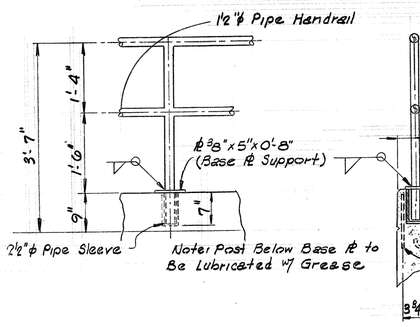

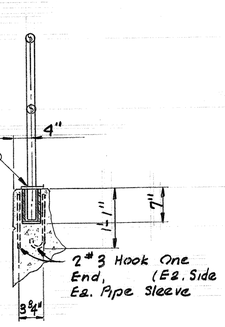

DETAILS OF REMOVABLE HANDRAIL POST BASE SUPPORT AND PIPE SLEEVE
Scale : ¾" = 1'-0"

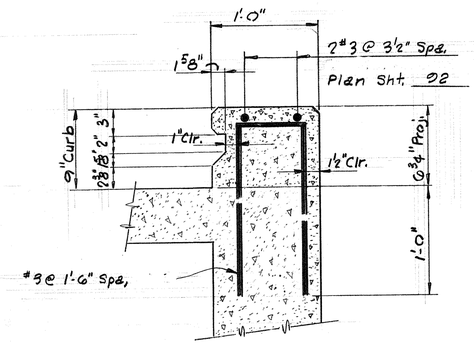

SECTION E / 93
Scale : 1½" = 1'-0"

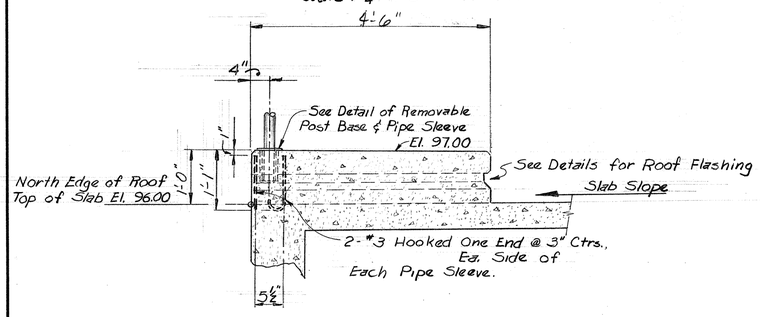

SECTION C / 93 REMOVABLE HANDRAIL POST BASE AT MATERIAL HOIST RAISED PLATFORM
Scale : ¾" = 1'-0"

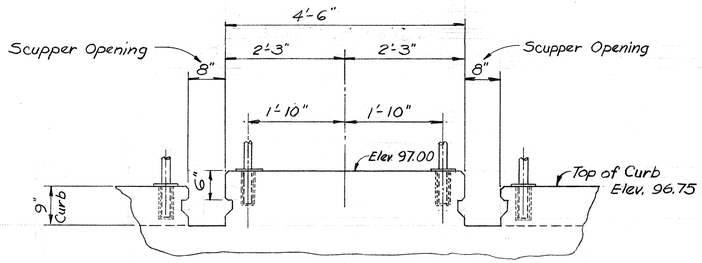

ELEVATION NORTH CURB AT MATERIAL HOIST PLATFORM
Scale : ¾" = 1'-0"

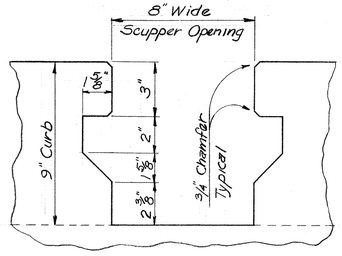

DETAILS FOR SCUPPER OPENINGS
(6 ~ REQ'D.)
Scale : 3" = 1'-0"

REV. NO.	DATE	DESCRIPTION	DESIGN	CHECKED
1	3-77	General Modifications & Bar Schedule Deleted	J.C.S.	S.E.S.

CITY OF HOUSTON
DEPARTMENT OF PUBLIC WORKS

ALMEDA SIMS SLUDGE DISPOSAL PLANT — 1973

DRYER ROOM
ROOF CURB & HANDRAIL
DETAILS

RECOMMENDED FOR APPROVAL:
Paul L. Holmes
BINKLEY & HOLMES, INC., CONSULTING ENGINEERS

APPROVED:
Walter Williams
CHIEF ENGINEER
ASST. CHIEF ENGINEER
ASST. DIRECTORS OF PUBLIC WORKS
DIRECTOR OF PUBLIC WORKS

DESIGNED BY: V. Jafri
DRAWN BY: G. Ryan & E. Smith
CHECKED BY: M.B.I. & S.E.S.
SCALE: As Shown
DATE: Dec., 1973
SHEET 93 OF 200 SHEETS
DRAWING NO. 18045

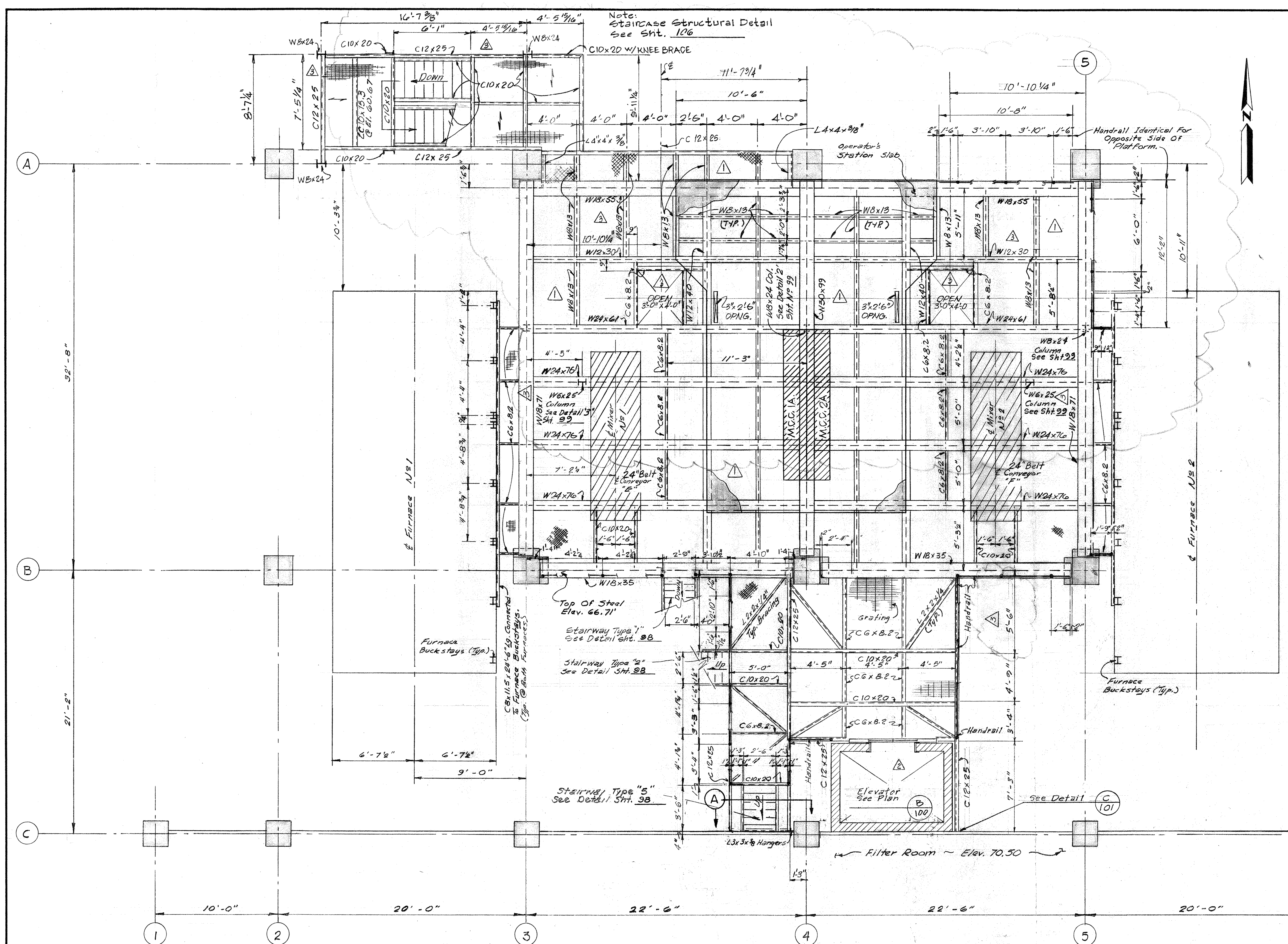

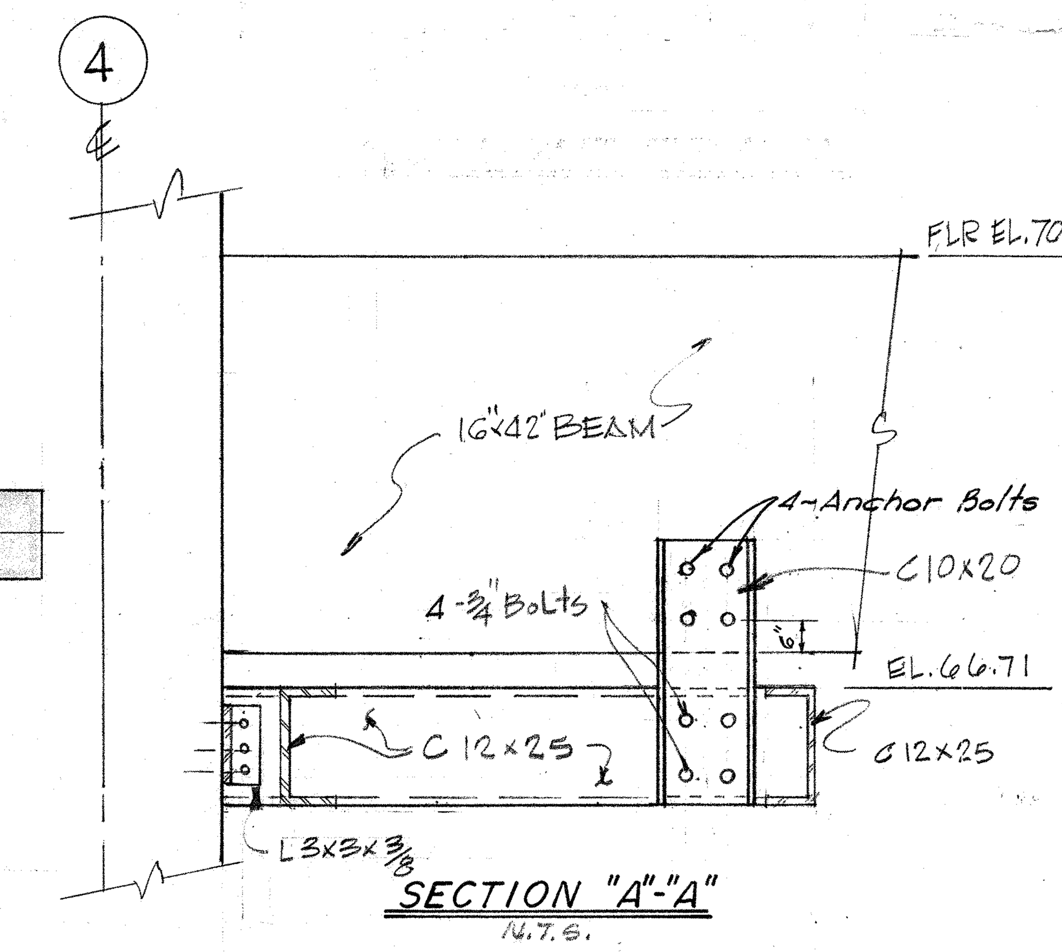

SECTION "A"-"A"
N.T.S.

WORKING PLATFORM FRAMING PLAN AT ELEVATION 66.83 (T.O.G.)

(Top Of Steel Elev. 66.71)

REV. NO.	DATE	DESCRIPTION	DESIGN	CHECKED
3	4-79	CONSTRUCTION REVISION STAIR TOWER STRUCTURAL FRAMING - SIZED & LOCATED DRYING TOWER OPENING. CHANGES IN BEAM SIZE & PLATFORM REFLECT CONSTRUCTION SUBMITTAL	D.D.C.	H.J.K.
2	6-77	Rev. Elevator	J.C.S.	K.R.L.
1	3-77	SOOT BLOWER & DETAILS REMOVED, OPERATORS STATION ENLARGED, STLWK. SIZES & LAYOUT REV'D.	J.C.S.	S.R.S.

CITY OF HOUSTON
DEPARTMENT OF PUBLIC WORKS

ALMEDA SIMS
SLUDGE DISPOSAL
PLANT — 1973

DRYER ROOM
WORKING PLATFORM FRAMING
PLAN AT ELEV. 66.83

RECOMMENDED FOR APPROVAL:
BINKLEY & HOLMES, INC., CONSULTING ENGINEERS

APPROVED:
CHIEF ENGINEER — ASST. CHIEF ENGINEER
ASST. DIRECTORS OF PUBLIC WORKS
DIRECTOR OF PUBLIC WORKS

DESIGNED BY: V. Jafri
DRAWN BY: C. A. MARRULLIER
CHECKED BY: M. B. J.
SCALE: ⅛" = 1'-0"
DATE: Dec., 1973
SHEET 94 OF 200 SHEETS
DRAWING NO. 18045

85

Note:
Staircase Structural Detail
See Sht. 98

WALKWAY FRAMING PLAN AT ELEVATION 80.50 (T.O.G.)
(Top Of Steel Elev. 80.38)

Notes:
1. Top Of Strut To Be Lightly Brushed Where Used As Part Of Walkways.
2. All Steel To Be Hot-Dipped Galv. After Fabrication.

REV. No.	DATE	DESCRIPTION	DESIGN	CHECKED
2	6-77	Rev. Elevator & Handrail	J.C.S	K.R.L
1	1-77	LOCATION OF C12x25'S-SUPPORTS FOR CONV'S. S-3 & S-4 REVISED	L.V.C.	J.A.

CITY OF HOUSTON
DEPARTMENT OF PUBLIC WORKS

ALMEDA SIMS
SLUDGE DISPOSAL
PLANT — 1973

DRYER ROOM
WALKWAY FRAMING

PLAN AT ELEV. 80.50

RECOMMENDED FOR APPROVAL:
BINKLEY & HOLMES, INC., CONSULTING ENGINEERS

APPROVED:
CHIEF ENGINEER
ASST. CHIEF ENGINEER
ASST. DIRECTORS OF PUBLIC WORKS
DIRECTOR OF PUBLIC WORKS

DESIGNED BY: V. Jafri
DRAWN BY: C.A. MARRULLER
CHECKED BY: M.D.J.
SCALE: 4"=1'-0"
DATE: Dec. 1973
SHEET 95 OF 200 SHEETS
DRAWING NO. 18045

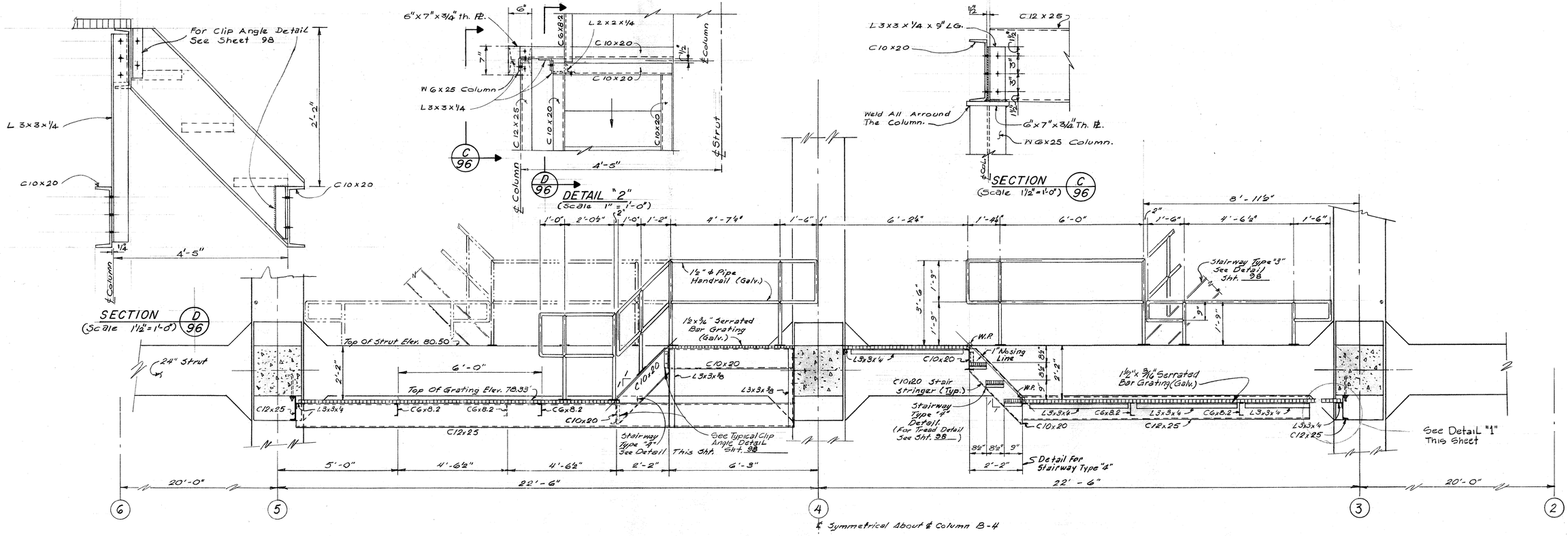

REV. Nº	DATE	DESCRIPTION	DESIGN	CHECKED
1	1-77	CONVEYOR S-3 & S-4 SETTING OUT REVISED	L.V.C	J. A.

CITY OF HOUSTON
DEPARTMENT OF PUBLIC WORKS

ALMEDA SIMS SLUDGE DISPOSAL PLANT — 1973

DRYER ROOM
FRAMING SECTIONS & DETAILS
AT ELEV. 80.50

RECOMMENDED FOR APPROVAL:
BINKLEY & HOLMES, INC., CONSULTING ENGINEERS

APPROVED:
CHIEF ENGINEER
ASST. CHIEF ENGINEER
ASST. DIRECTORS OF PUBLIC WORKS
DIRECTOR OF PUBLIC WORKS

DESIGNED BY: V. Jafri
DRAWN BY: C.A. MARRULLIER
CHECKED BY: M. D. S.
SCALE: AS NOTED
DATE: Dec., 1973
SHEET 96 OF 200 SHEETS
DRAWING NO. 18045

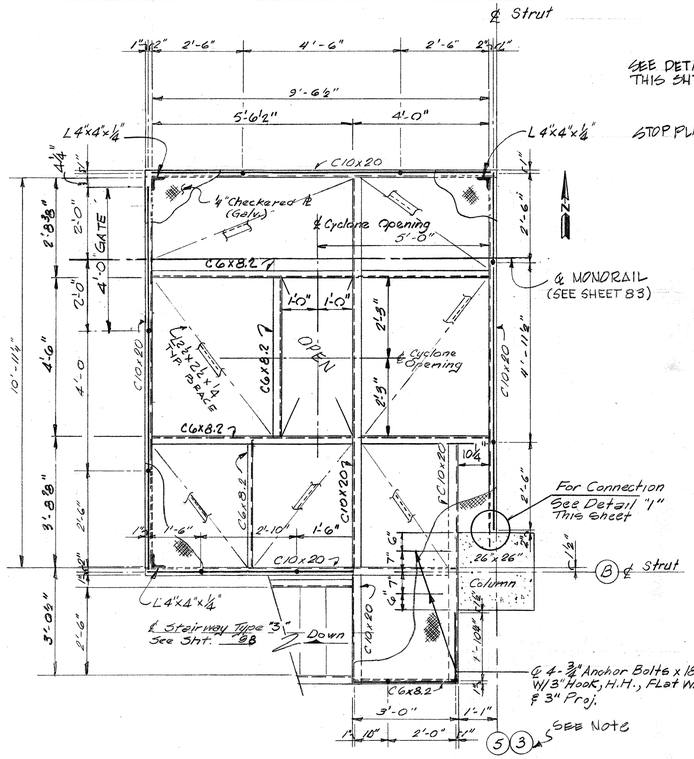

FRAMING PLAN AT ELEV. 85.38 (T.O.R.)
(TOP OF STEEL ELEV. 85.35)
Scale ½"=1'-0"

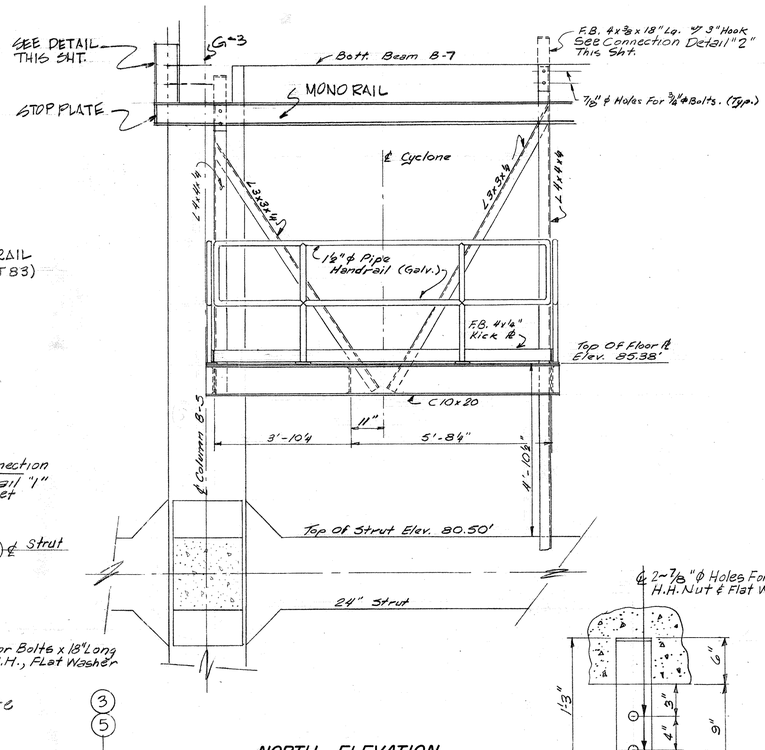

NORTH ELEVATION
Scale: ½"=1'-0"

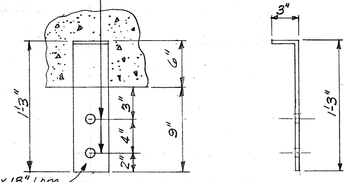

CONNECTION DETAIL "2"
Scale 1½"=1'-0"

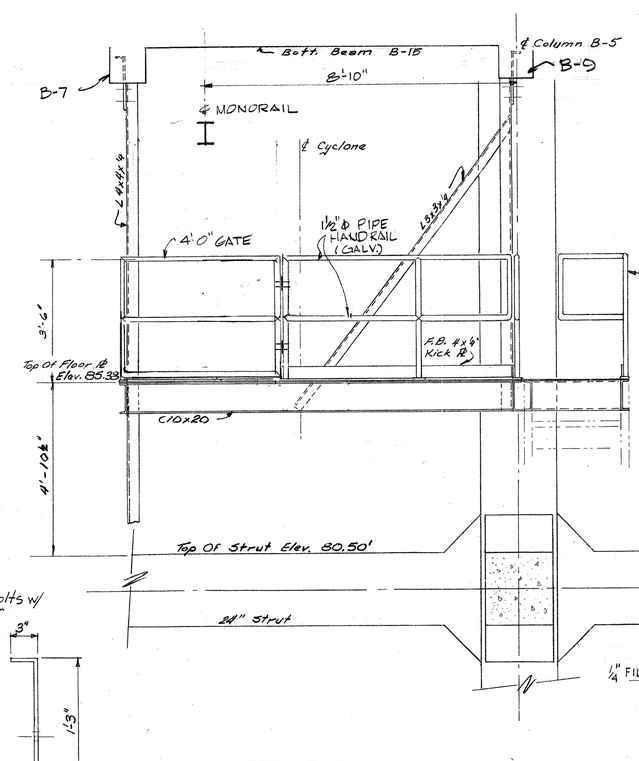

WEST ELEVATION
Scale: ½"=1'-0"

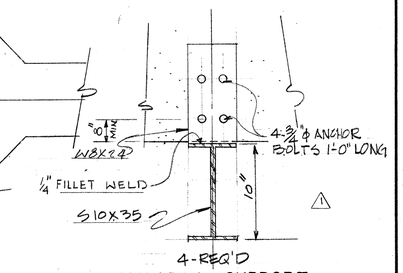

4-REQ'D
MONORAIL SUPPORT DETAIL
N.T.S.

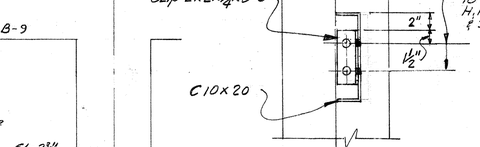

CONNECTION DETAIL "1"
Scale 1½"=1'-0"

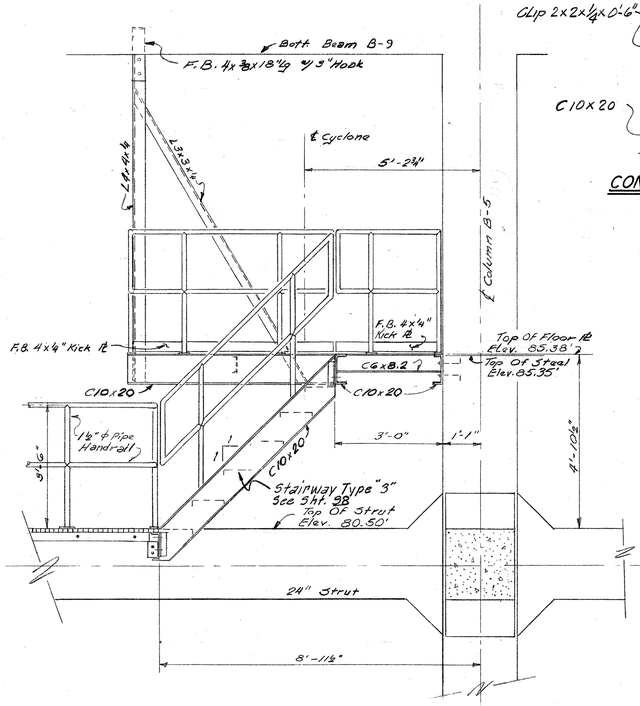

SOUTH ELEVATION
Scale: ½"=1'-0"

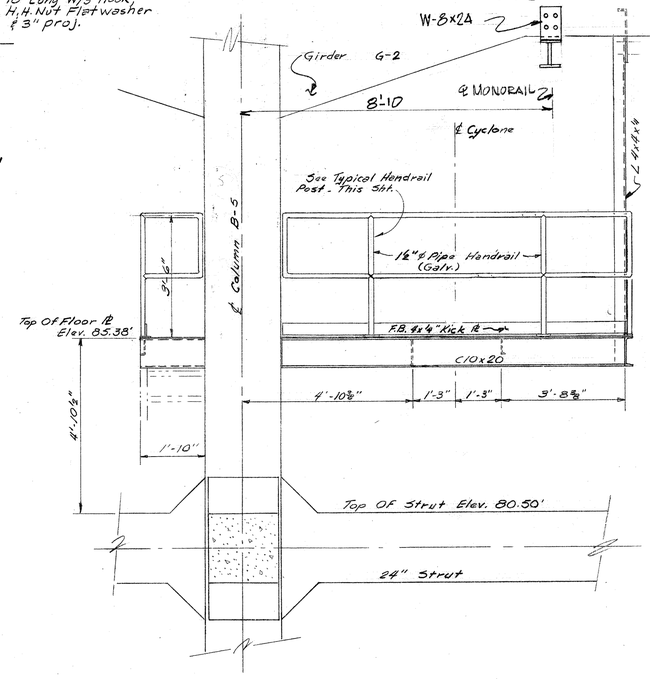

EAST ELEVATION
Scale: ½"=1'-0"

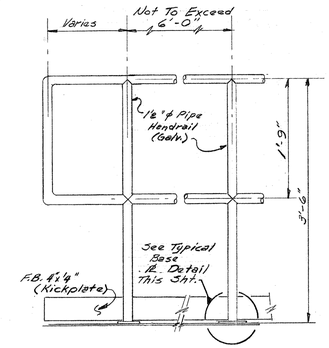

TYPICAL HANDRAIL POST
Scale: 1"=1'-0"

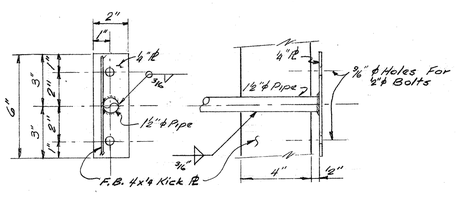

TYPICAL HANDRAIL BASE ℞ DETAIL
Scale: 3"=1'-0"

Notes:
1- Platform @ Column B-3 Is Identical But Opposite Hand.
2- All Steel To Be Hot-Dipped Galv. After Fabrication.

REV. NO.	DATE	DESCRIPTION	DESIGN	CHECKED
1	3-77	REVISED MONORAIL & MISCELL. PLATFORM STEEL	J.C.S.	G.R.S.

CITY OF HOUSTON
DEPARTMENT OF PUBLIC WORKS

ALMEDA SIMS
SLUDGE DISPOSAL
PLANT – 1973

DRYER ROOM
FRAMING PLAN AT
ELEV. 85.38
ELEVATIONS & DETAILS

RECOMMENDED FOR APPROVAL:
BINKLEY & HOLMES, INC., CONSULTING ENGINEERS

APPROVED:
CHIEF ENGINEER
ASST. CHIEF ENGINEER
ASST. DIRECTORS OF PUBLIC WORKS
DIRECTOR OF PUBLIC WORKS

DESIGNED BY: V. Japri
DRAWN BY: C. MARRULLIER
CHECKED BY: M. B. J.
SCALE: As Shown
DATE: Dec., 1973
SHEET 97 OF 200 SHEETS
DRAWING NO. 18045

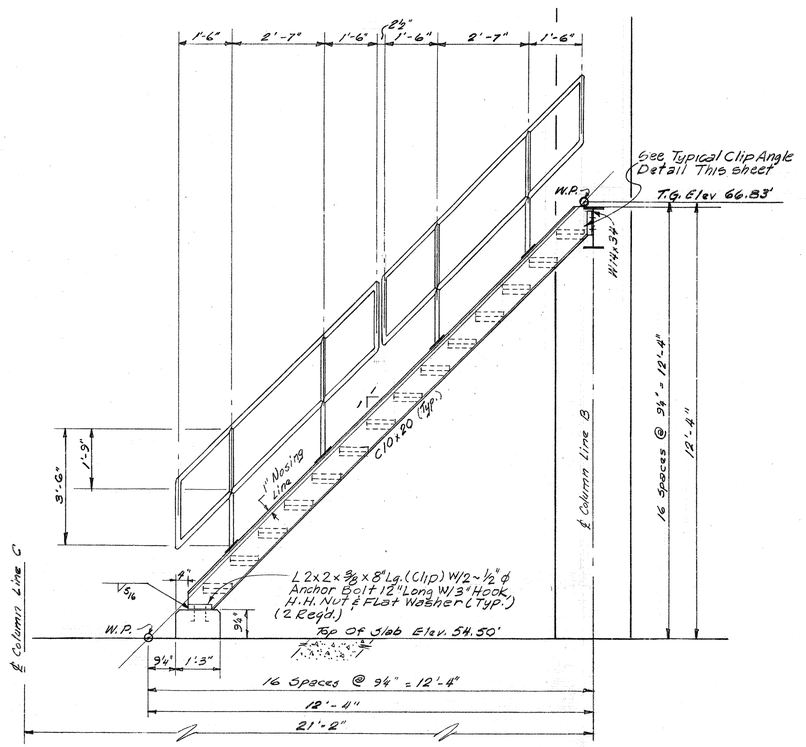

STAIRWAY TYPE "1"

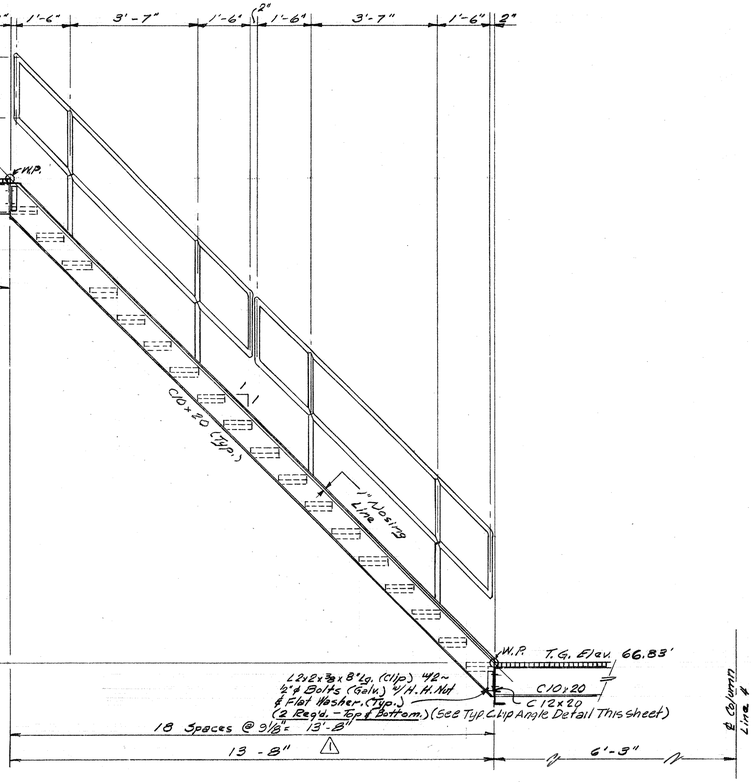

STAIRWAY TYPE "2"

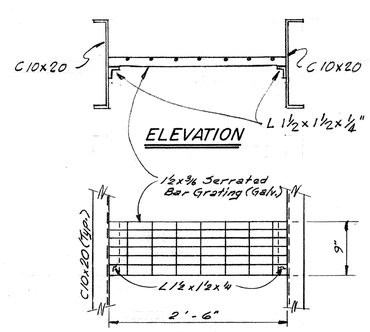

PLAN

TYPICAL TREAD DETAIL

n.t.s.

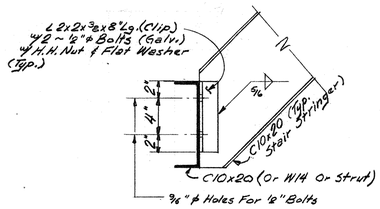

TYPICAL CLIP ANGLE DETAIL

n.t.s.

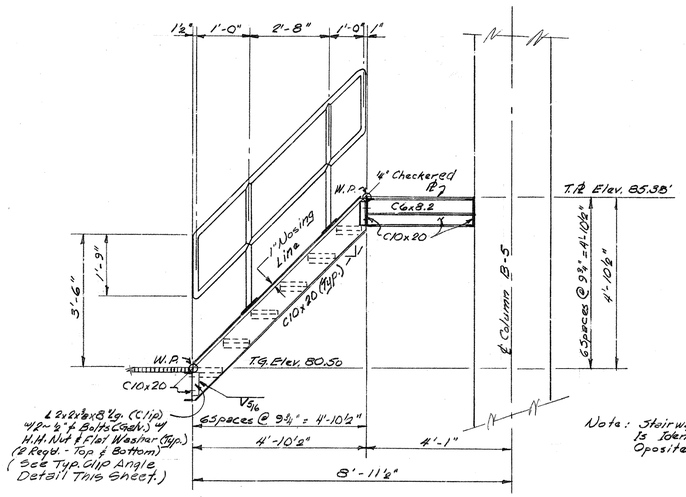

Note: Stairway @ Column B-3 Is Identical But Opposite Hand.

STAIRWAY TYPE "3"

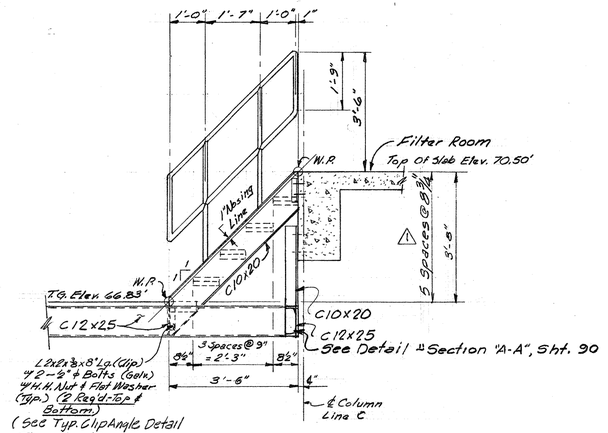

STAIRWAY TYPE "5"

Notes:
1. Stairway Type "4" Detailed On Sht. 96 See Section "A"
2. All Steel To Be Hot-Dipped Galv. After Fabrication.

CITY OF HOUSTON
DEPARTMENT OF PUBLIC WORKS

ALMEDA SIMS SLUDGE DISPOSAL PLANT – 1973

DRYER ROOM
STAIR DETAILS

STAIRWAY TYPES 1,2,3 & 5

RECOMMENDED FOR APPROVAL:
BINKLEY & HOLMES, INC., CONSULTING ENGINEERS

APPROVED:
CHIEF ENGINEER — ASST. CHIEF ENGINEER
ASST. DIRECTORS OF PUBLIC WORKS
DIRECTOR OF PUBLIC WORKS

DESIGNED BY: V. Jaeri
DRAWN BY: C.A. MARRILLIER
CHECKED BY: M. P. S.
SCALE: ¼" = 1'-0", U.N.
DATE: Dec. 1973
SHEET 98 OF 200 SHEETS
DRAWING NO. 18045

REV. NO.	DATE	DESCRIPTION	DESIGN	CHECKED
1	3-77	REVISED DIMINSIONS	J.C.S.	S.R.S.

CITY OF HOUSTON
DEPARTMENT OF PUBLIC WORKS

ALMEDA SIMS SLUDGE DISPOSAL PLANT — 1973

DRYER ROOM STEEL FRAMING

MISCELLANEOUS DETAILS

RECOMMENDED FOR APPROVAL:
BINKLEY & HOLMES, INC., CONSULTING ENGINEERS

APPROVED:
CHIEF ENGINEER — ASST. CHIEF ENGINEER
ASST. DIRECTORS OF PUBLIC WORKS
DIRECTOR OF PUBLIC WORKS

DESIGNED BY: V. Jafri
DRAWN BY: C. A. MARRULLIER
CHECKED BY: M. B. J.
SCALE: As Shown
DATE: Dec. 1973
SHEET 99 OF 200 SHEETS
DRAWING NO. 10845

REV. Nº	DATE	DESCRIPTION	DESIGN	CHECKED
△	1-77	SPACING OF CONVS. S-3 & S-4 REVISED. STEP-OVER DELETED	J.C.S.	S.R.S.

90

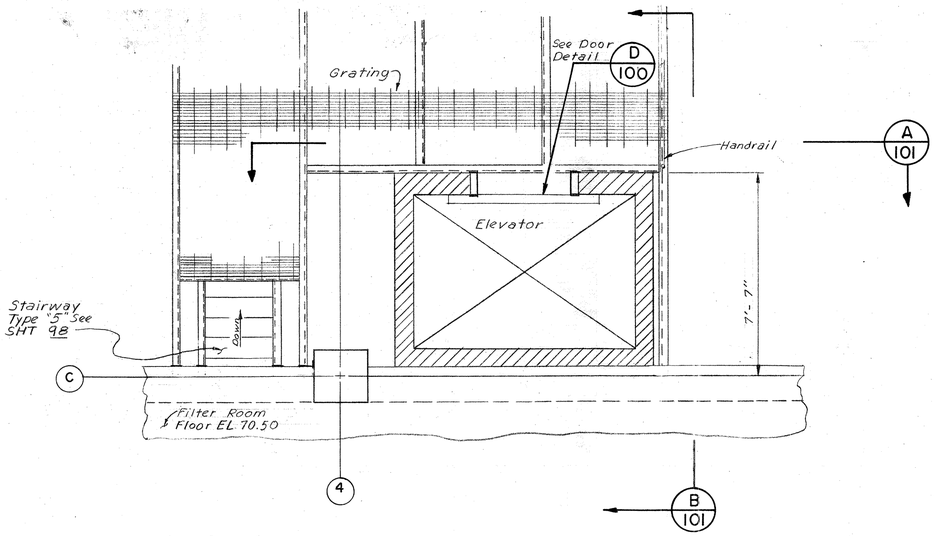

ELEVATOR PLAN B 100
Scale 3/16"=1'-0"

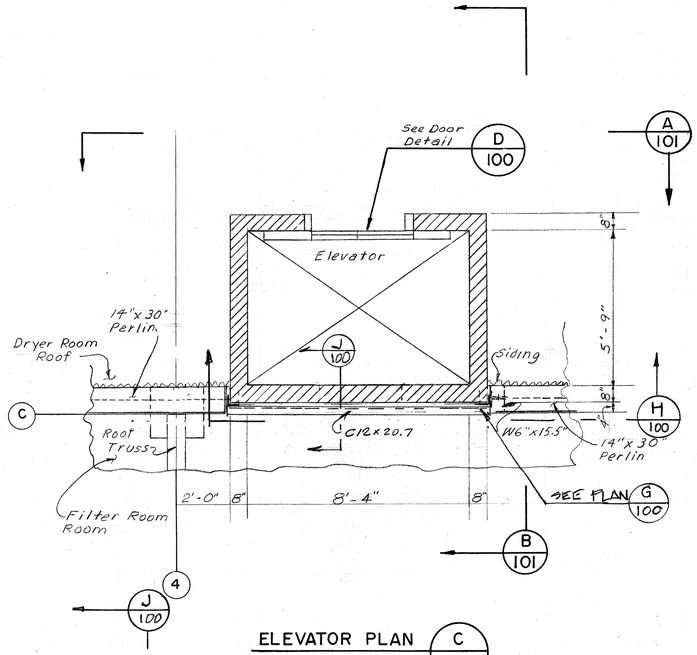

ELEVATOR PLAN C 100
Scale 3/16"=1'-0"

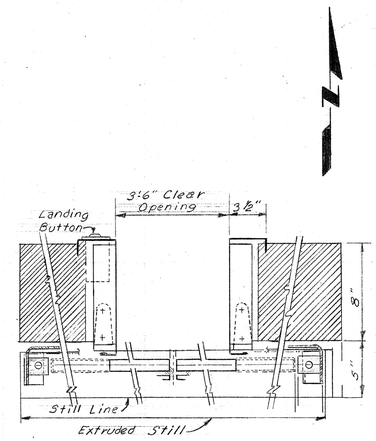

PLAN VIEW DOOR DETAIL D 100
Not To Scale

REV. NO.	DATE	DESCRIPTION	DESIGN	CHECKED
1	11-78	PERMIT REVISION	H.J.K.	K.R.L.

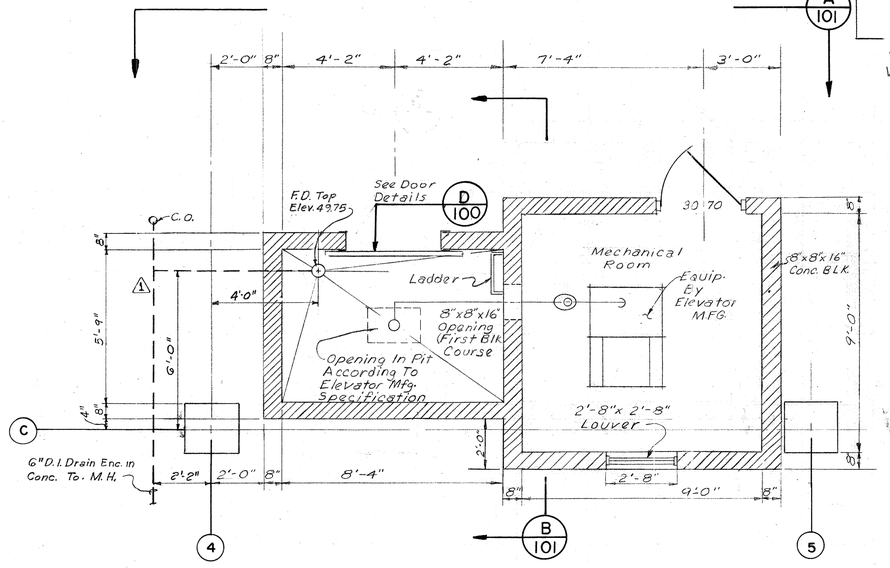

ELEVATOR PLAN A 100
Scale: 3/8"=1'-0"

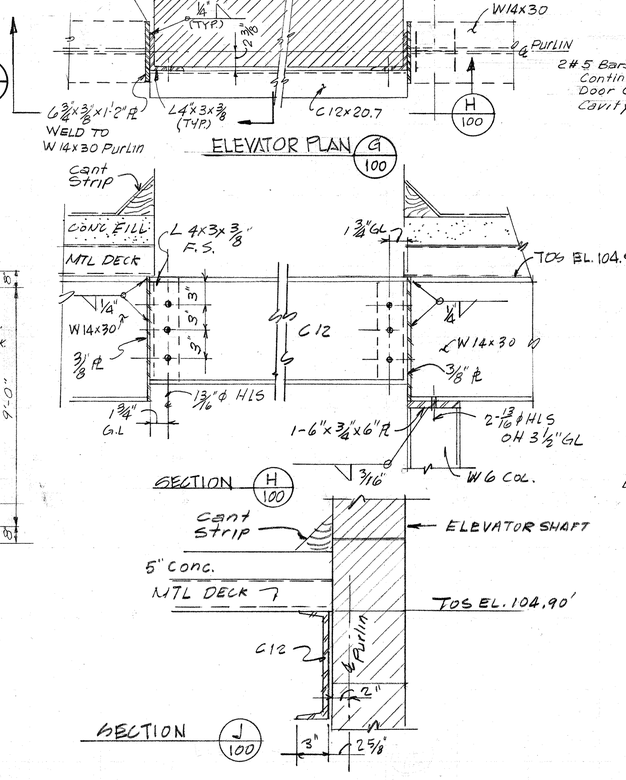

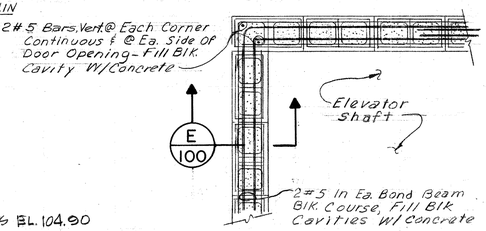

NOTE

Bond Beam Shall Be Located In Elevator Shaft Walls At Elev. 63.83, 74.00, 81.63 And 106.50 Or The Nearest Block Course To These Elevations, And/Or Lintel Over Ea. Door Or Opening.

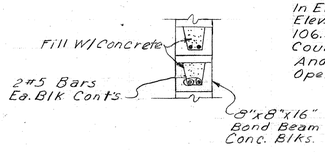

SECTION E 100

BOND BEAM DETAIL F 100
(N.T.S.)

STATE OF TEXAS — KENNETH R. LINDSEY — 31158 — REGISTERED PROFESSIONAL ENGINEER

STATE OF TEXAS — J. C. SUMAN — 40892 — REGISTERED PROFESSIONAL ENGINEER

CITY OF HOUSTON
DEPARTMENT OF PUBLIC WORKS

ALMEDA-SIMS
SLUDGE DISPOSAL
PLANT - 1973

DRYER ROOM
ELEVATOR DETAILS

RECOMMENDED FOR APPROVAL:
BINKLEY & HOLMES, INC., CONSULTING ENGINEERS

APPROVED:
CHIEF ENGINEER — ASST. CHIEF ENGINEER
ASST. DIRECTORS OF PUBLIC WORKS
DIRECTOR OF PUBLIC WORKS

DESIGNED BY:
DRAWN BY: L. MITCHELL
CHECKED BY:
SCALE: AS SHOWN
DATE: JUNE 1977
SHEET 100 OF 200 SHEETS
DRAWING NO. 18045

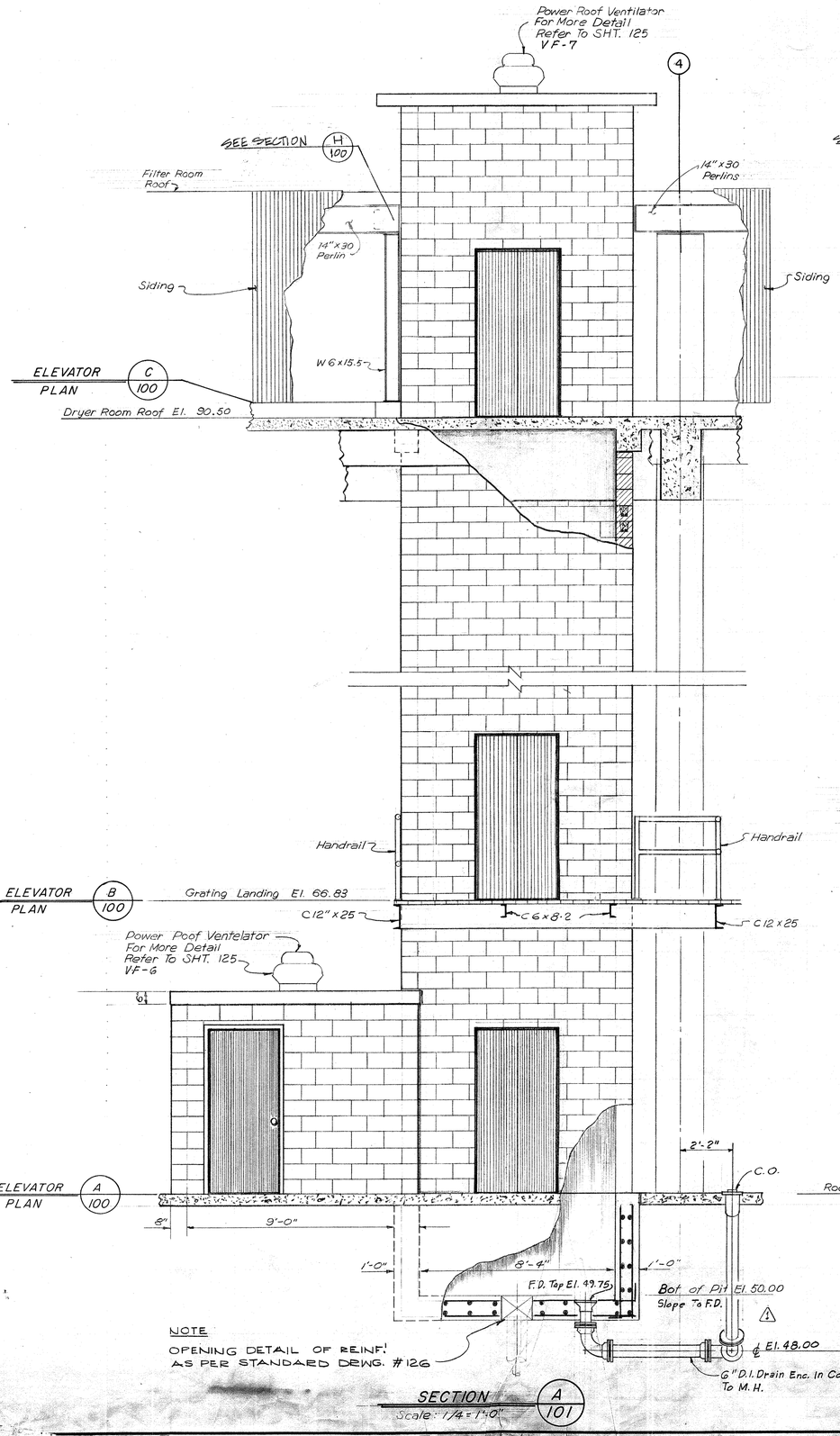

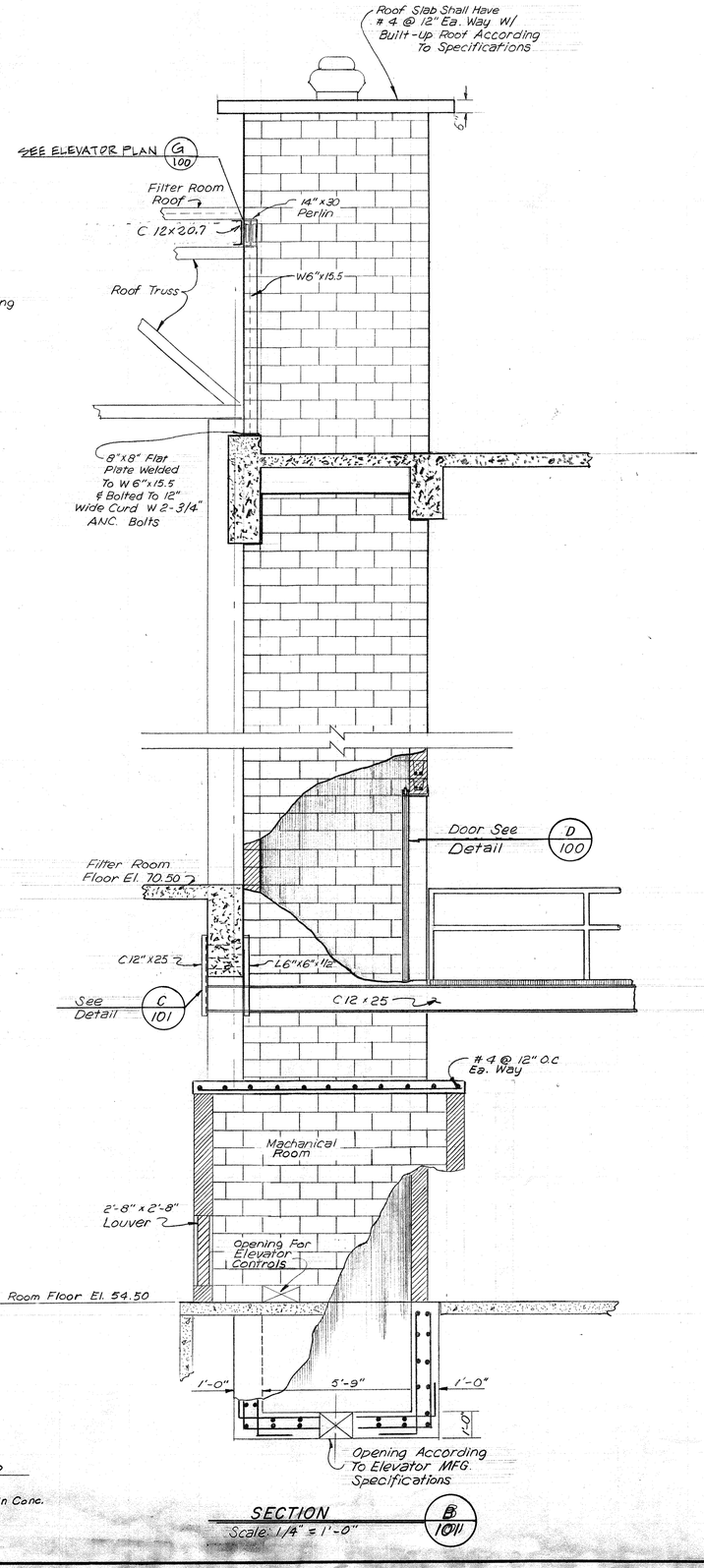

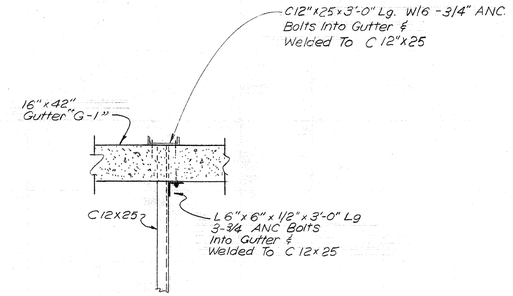

PLAN DETAIL C/101

N

REV.NO.	DATE	DESCRIPTION	DESIGN	CHECKED
1	11-78	PERMIT REVISION	H.J.K.	K.R.L.

KENNETH R. LINDSEY 31158 REGISTERED PROFESSIONAL ENGINEER — STATE OF TEXAS

J.C. SUMAN 40882 REGISTERED PROFESSIONAL ENGINEER — STATE OF TEXAS

CITY OF HOUSTON
DEPARTMENT OF PUBLIC WORKS

ALMEDA SIMS
SLUDGE DISPOSAL
PLANT-1973

DRYER ROOM

ELEVATOR DETAILS

RECOMMENDED FOR APPROVAL:
BINKLEY & HOLMES, INC., CONSULTING ENGINEERS

APPROVED:
CHIEF ENGINEER — ASST. CHIEF ENGINEER
ASST. DIRECTORS OF PUBLIC WORKS
DIRECTOR OF PUBLIC WORKS

DESIGNED BY: J.C.S
DRAWN BY: E. THOMAS & H. ZAVALA
CHECKED BY: K.R.L.
SCALE: 3/8"=1'-0"
DATE: JUNE, 1977
SHEET 101 OF 200 SHEETS
DRAWING NO. 18045

Note: Refer To Regular Drawings Concerning Fittings, Details And Instructions For The Complete Construction Of The Filtrate Seal Pit. This Drawing Is To Serve Only As An Aid To The Contractor In The Layout Of The Seal Pit And In The Re-routing Of Various Piping.

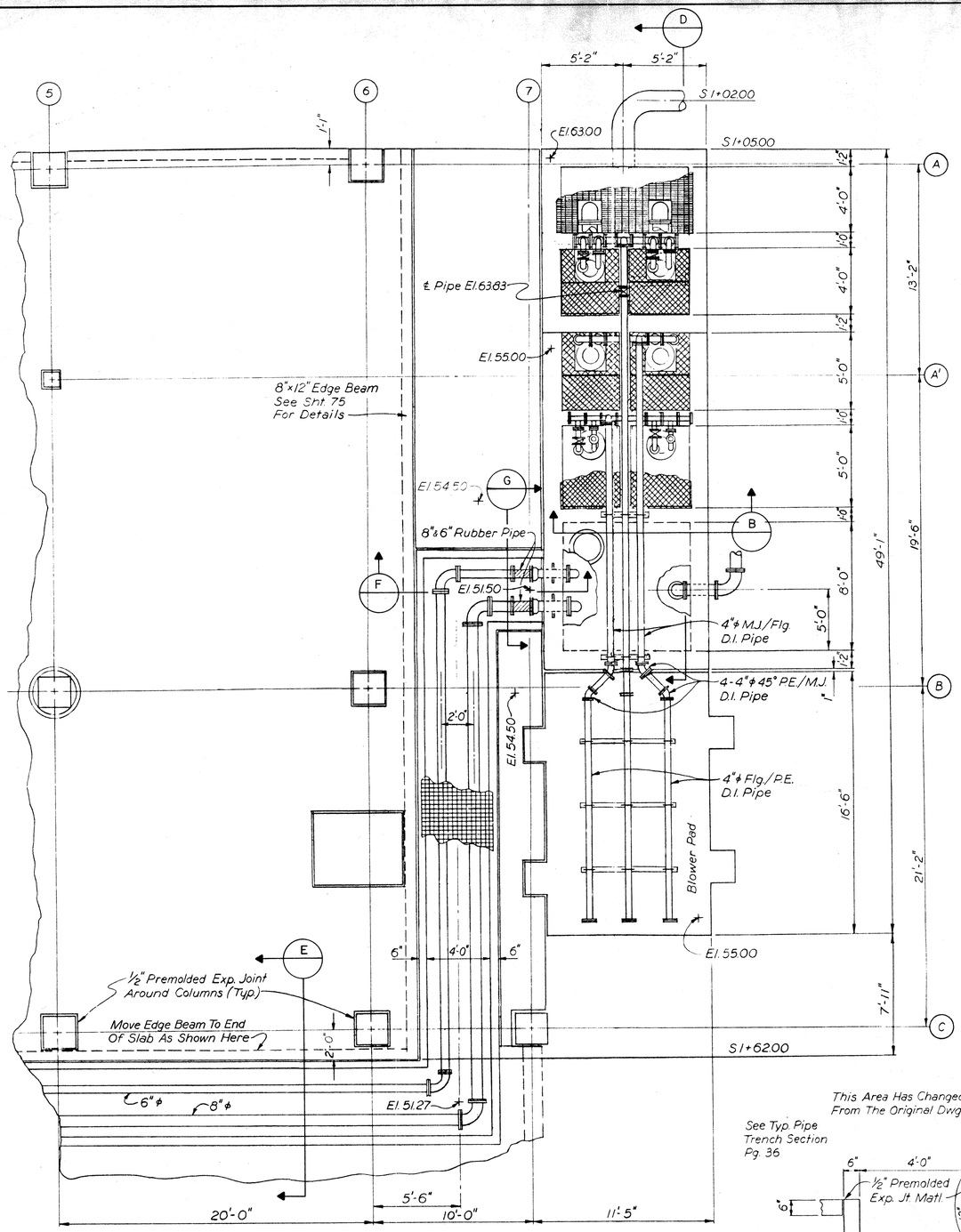

PLAN A
Scale: ⅛"=1'-0"

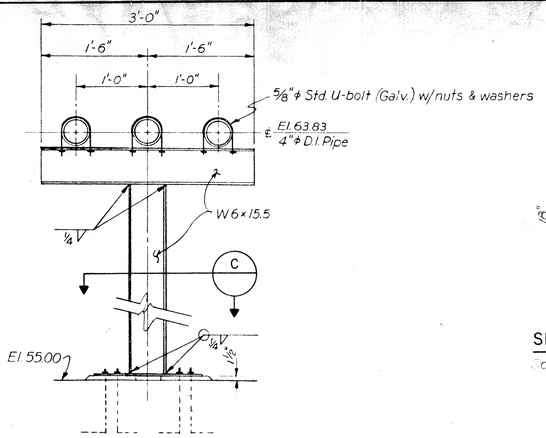

TYPE "B" SUPPORT B
Scale: 1"=1'-0"

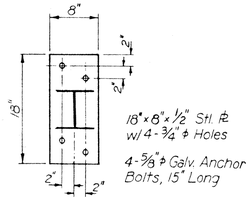

SECTION C
Scale: 1"=1'-0"

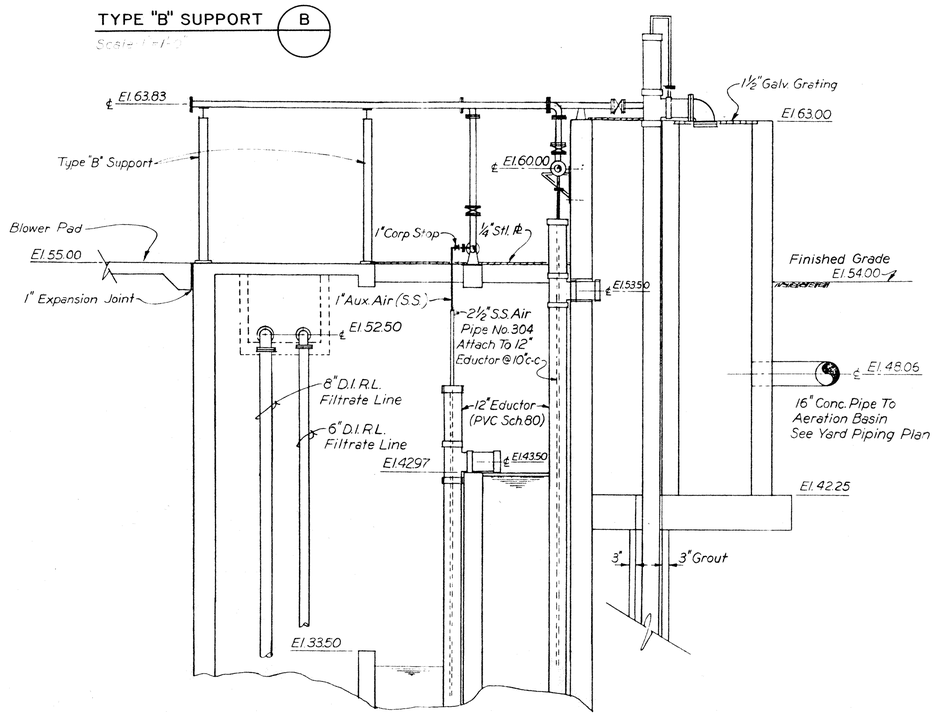

SECTION D
Scale: ¼"=1'-0"

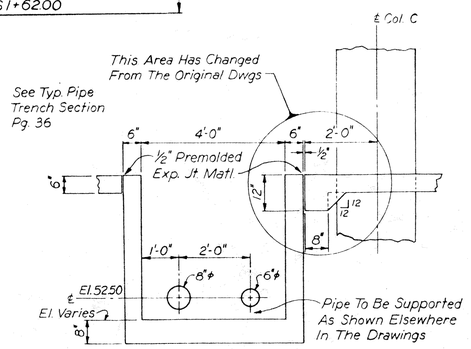

SECTION E
Scale: ¼"=1'-0"

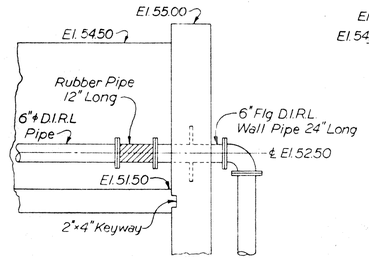

SECTION F
Scale: ¼"=1'-0"

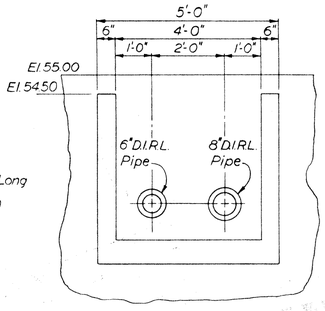

SECTION G
Scale: ¼"=1'-0"

CITY OF HOUSTON
DEPARTMENT OF PUBLIC WORKS

ALMEDA SIMS
SLUDGE DISPOSAL
PLANT - 1973

RELOCATION OF
FILTRATE SEAL PIT

RECOMMENDED FOR APPROVAL:

BINKLEY & HOLMES INC. CONSULTING ENGINEERS

APPROVED:

WASTEWATER	PAVING
WATER	CONSTRUCTION
STORM SEWER	
ASST. DIRECTOR	DIRECTOR

DESIGNED BY C.B. SCALE As Shown
DRAWN BY R.P.P., C.B. DATE May 1978
CHECKED BY H.J.K. DRAWING NO.
SHEET SHEET NO. OF

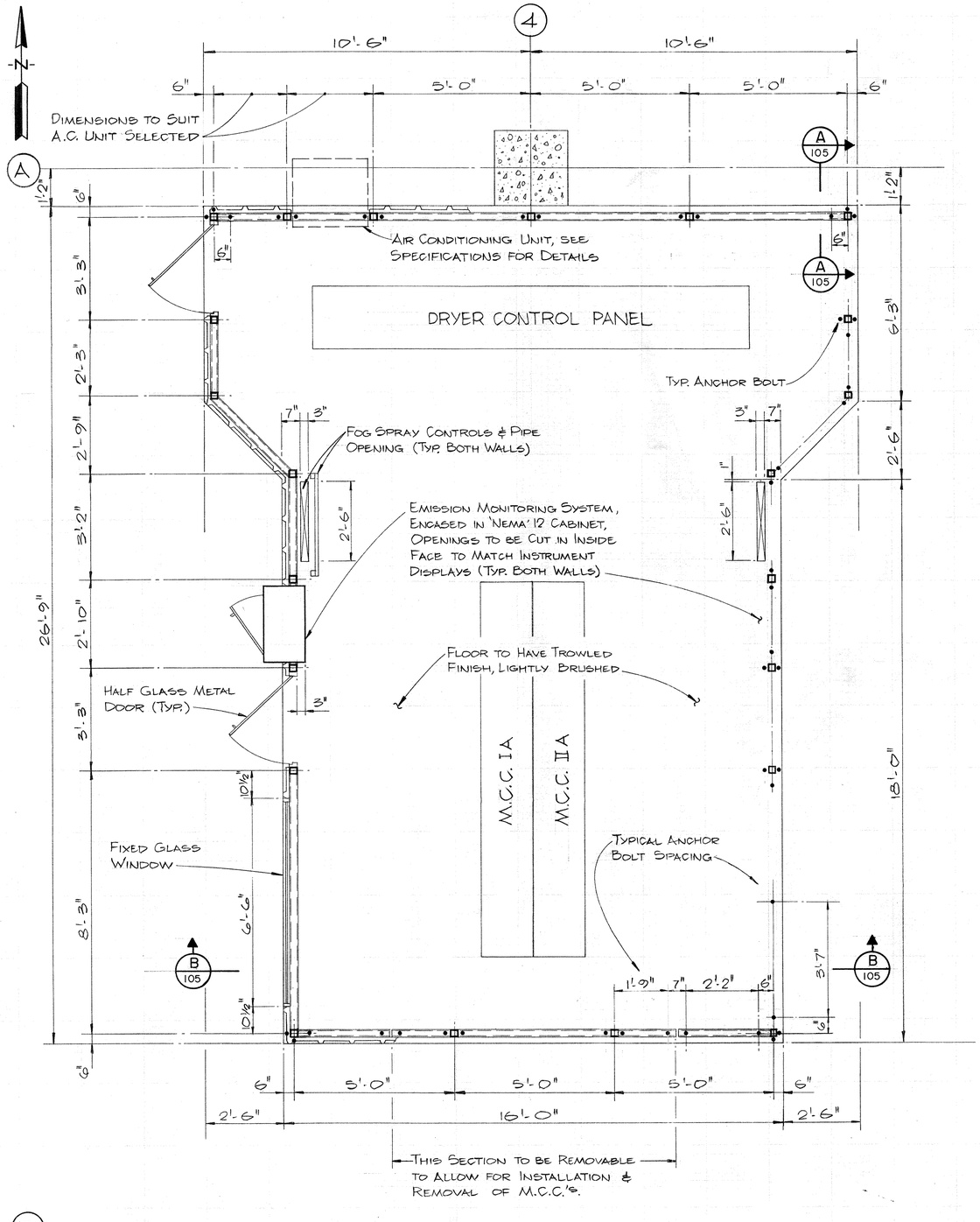

NOTE:- ALL DETAILS SHOWN ON EAST OR WEST WALL REPEAT ON OPPOSITE WALL HANDED

PLAN
SCALE ½"=1'-0"

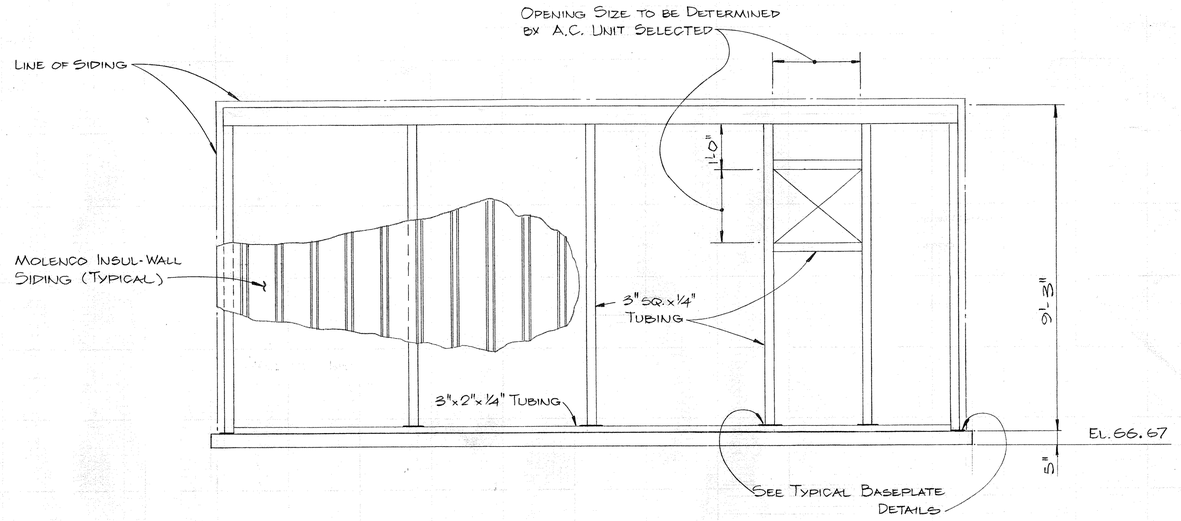

NORTH ELEVATION
SCALE ½"=1'-0"

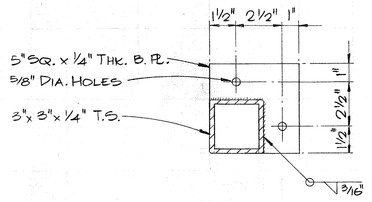

PLAN

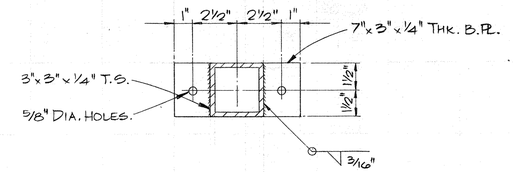

PLAN

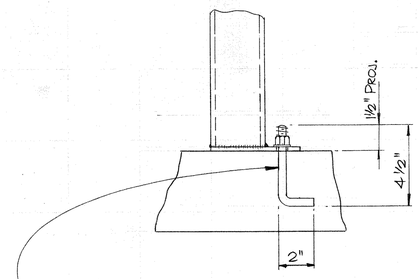

½" DIA. ANCHOR BOLT WITH H.H. NUT & WASHER, WHEN BOLTING BASEPLATE DIRECTLY ONTO SLAB.

ELEVATION

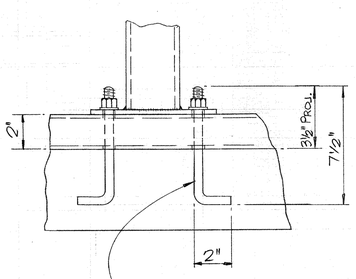

½" DIA. ANCHOR BOLT WITH H.H NUT & WASHER, WHEN BOLTING BASPLATE THRU' FRAMING OR BOLTING DOWN FRAMING ALONE

ELEVATION

TYPICAL BASEPLATE DETAILS
SCALE 3"=1'-0"

STATE OF TEXAS — KENNETH R. LINDSEY — 31158 — REGISTERED PROFESSIONAL ENGINEER

STATE OF TEXAS — J.C. SUMAN — 40880 — REGISTERED PROFESSIONAL ENGINEER

CITY OF HOUSTON
DEPARTMENT OF PUBLIC WORKS

ALMEDA SIMS
SLUDGE DISPOSAL
PLANT— 1973

DRYER ROOM

OPERATOR STATION

RECOMMENDED FOR APPROVAL:
BINKLEY & HOLMES, INC., CONSULTING ENGINEERS

APPROVED:
CHIEF ENGINEER — ASST. CHIEF ENGINEER
ASST. DIRECTORS OF PUBLIC WORKS
DIRECTOR OF PUBLIC WORKS

DESIGNED BY: L.V.C. & J.C.S.
DRAWN BY: L.V.C.
CHECKED BY:
SCALE: AS SHOWN
DATE: MARCH 1977
SHEET 104 OF 200 SHEETS
DRAWING NO. 18045

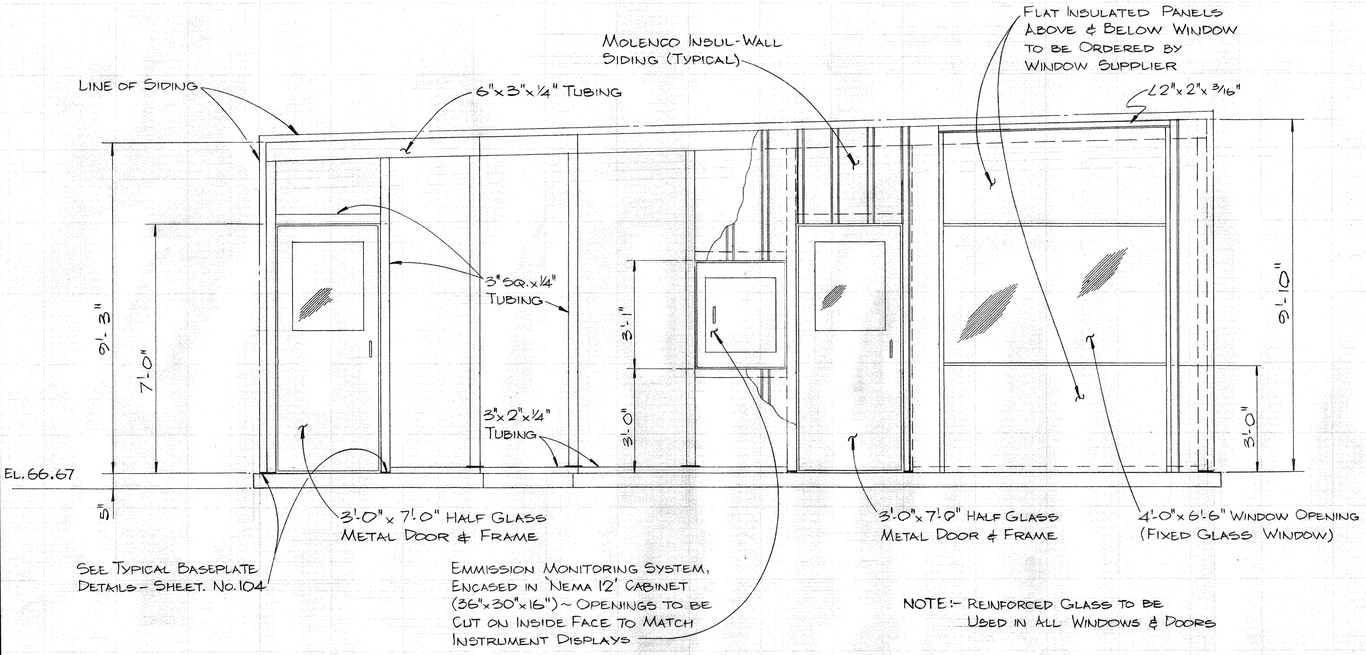

EAST ELEVATION
WEST ELEVATION OPPOSITE HAND
SCALE ½" = 1'-0"

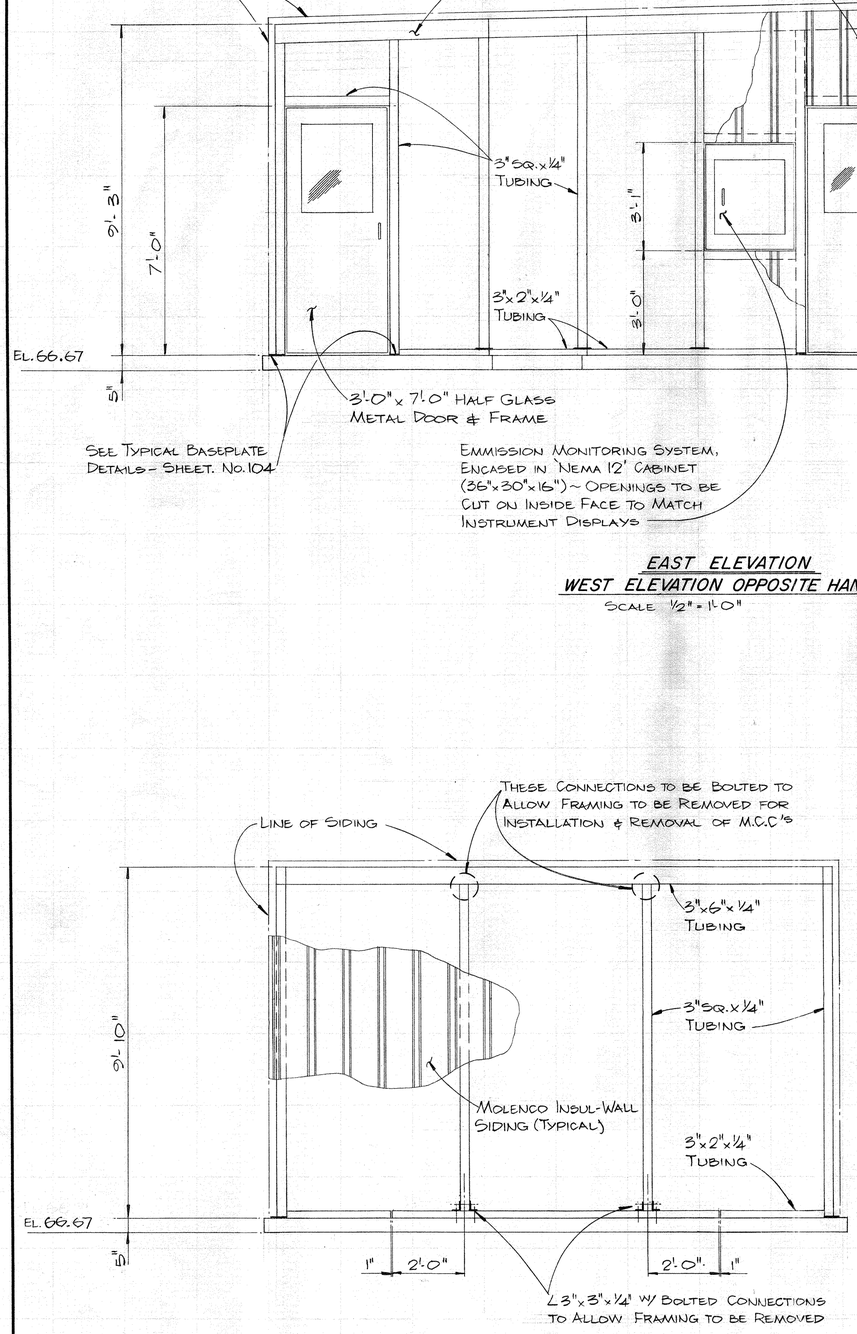

SOUTH ELEVATION
SCALE ½" = 1'-0"

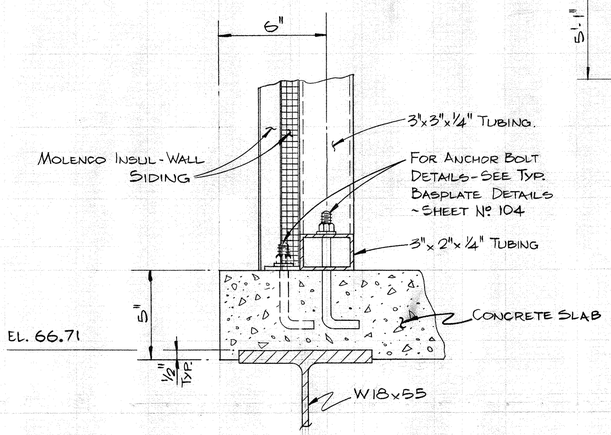

SECTION A / 105

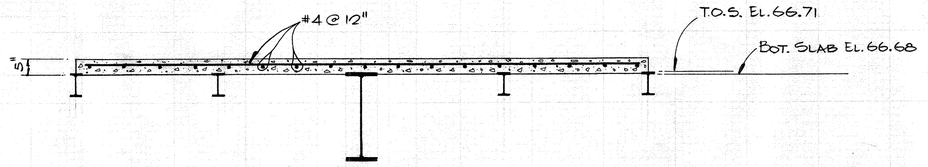

SECTION B / 105

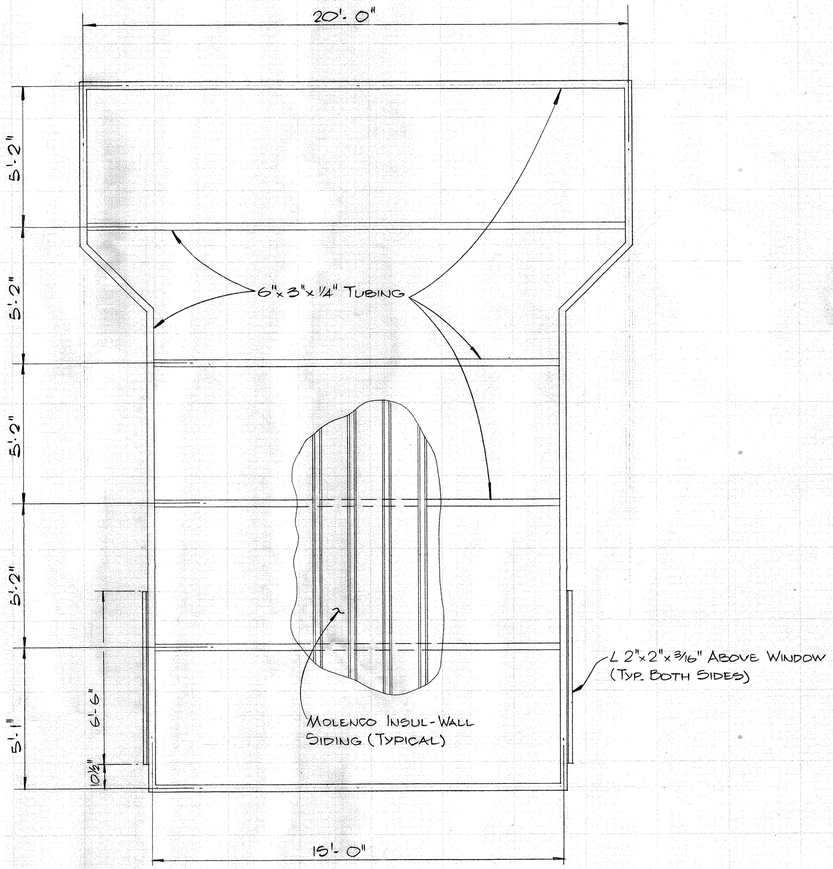

ROOF PLAN
SCALE 3/8" = 1'-0"

KENNETH R. LINDSEY 31158 REGISTERED PROFESSIONAL ENGINEER

J. C. SUMAN REGISTERED PROFESSIONAL ENGINEER

CITY OF HOUSTON
DEPARTMENT OF PUBLIC WORKS

ALMEDA SIMS
SLUDGE DISPOSAL
PLANT – 1973

DRYER ROOM

OPERATOR STATION

RECOMMENDED FOR APPROVAL:
BINKLEY & HOLMES, INC., CONSULTING ENGINEERS

APPROVED:
CHIEF ENGINEER — ASST. CHIEF ENGINEER
ASST. DIRECTORS OF PUBLIC WORKS
DIRECTOR OF PUBLIC WORKS

DESIGNED BY: L.V.C. & J.C.S.
DRAWN BY: L.V.C.
CHECKED BY:
SCALE: AS SHOWN
DATE: MARCH 1977
SHEET 105 OF 200 SHEETS
DRAWING NO. 18045

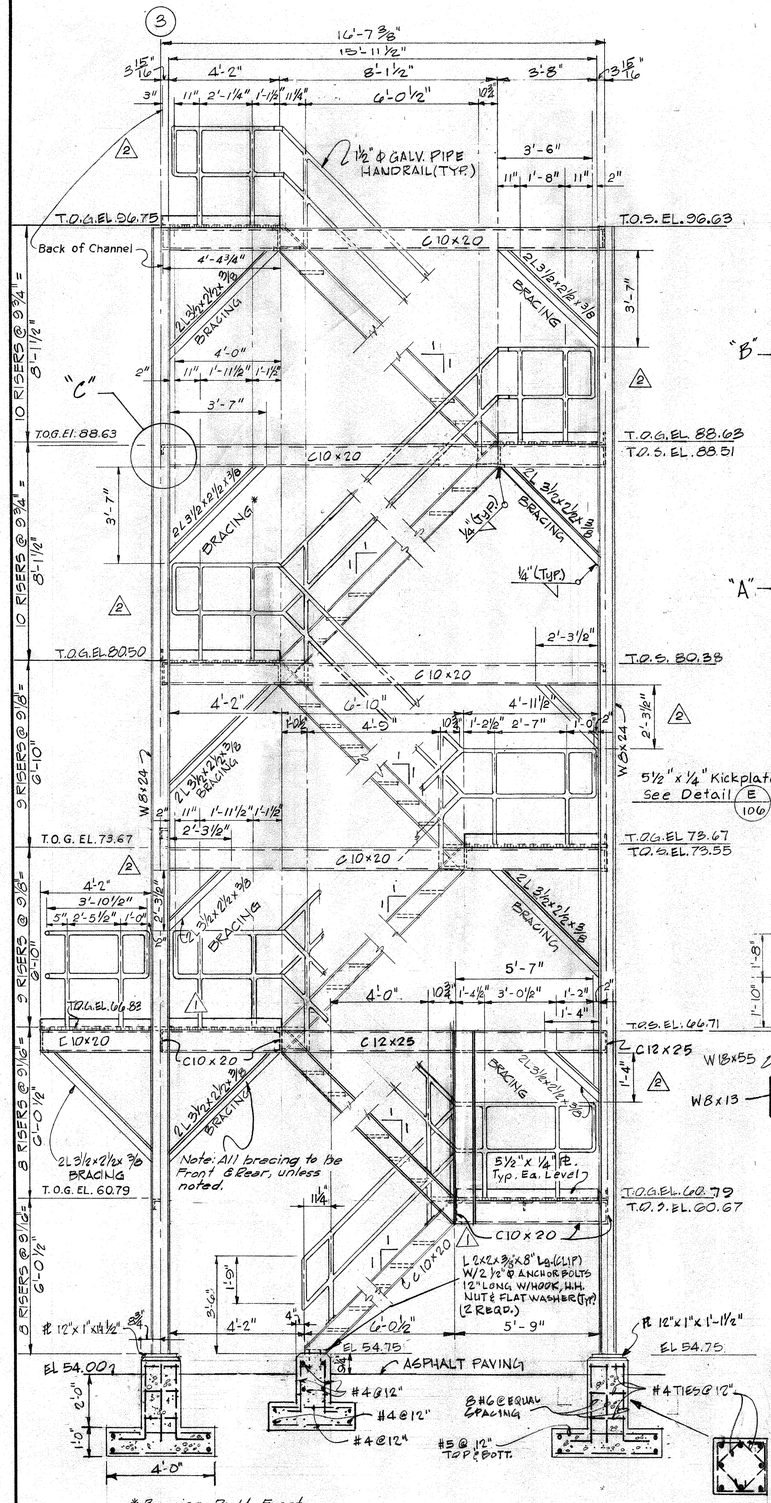

NORTH FRAMING ELEVATION

SCALE 3/8"=1'-0"

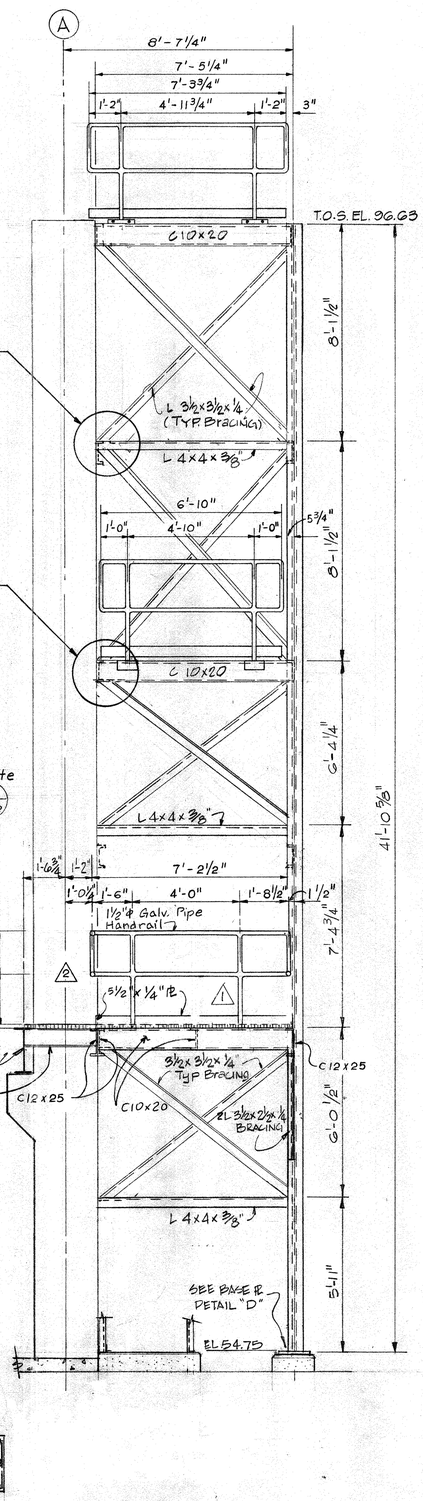

EAST FRAMING ELEVATION

SCALE: 3/8"=1'-0"

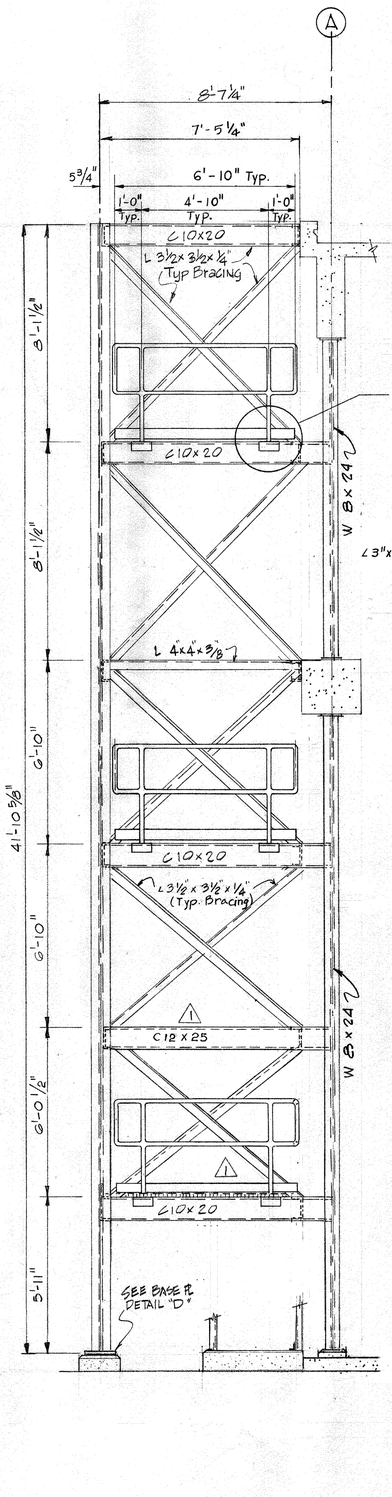

WEST FRAMING ELEVATION

SCALE 3/8"=1'-0"

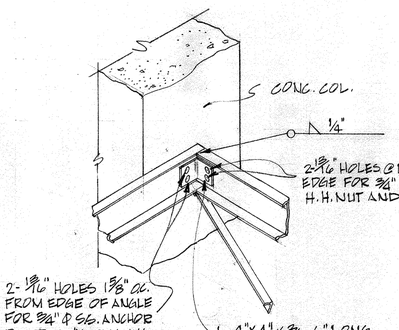

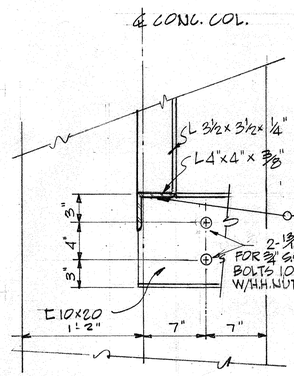

DETAIL "A"

NOT TO SCALE

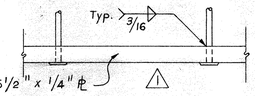

TYPICAL KICKPLATE DETAIL "E"

NOT TO SCALE

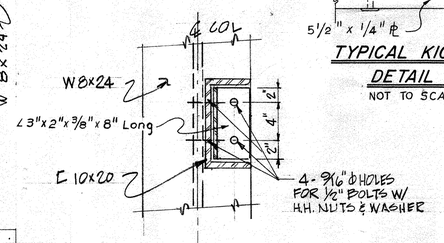

DETAIL "C"

NOT TO SCALE

DETAIL "B"

NOT TO SCALE

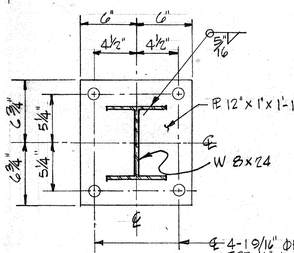

BASE PLATE DETAIL "D"

NOT TO SCALE (6 REQ'D.)

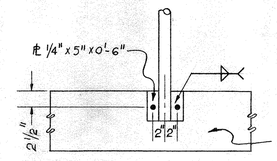

DETAIL "F"

SCALE: 1"=1'-0"

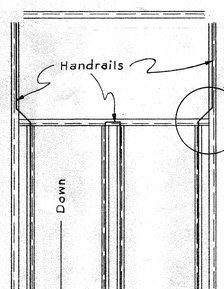

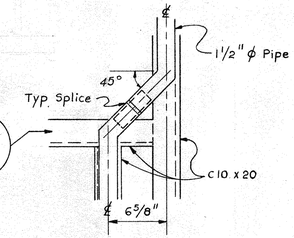

DETAIL "G"

SCALE: 1 1/2"=1'-0"

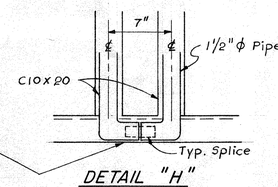

DETAIL "H"

SCALE: 1 1/2"=1'-0"

REV. NO.	DATE	DESCRIPTION	DESIGN	CHECKED
2	6-79	Construction Revision Revised Framing and Handrails	W.W.	H. J. K.
1	4-79	Construction Revision Revised Stair Landing @ El. 66.83 & El. 60.79 and Add Kickplate Detail	D.D.C.	H. J. K.

CITY OF HOUSTON
DEPARTMENT OF PUBLIC WORKS

ALMEDA SIMS
SLUDGE DISPOSAL
PLANT — 1973

DRYER ROOM

STAIRWAY & DETAILS

RECOMMENDED FOR APPROVAL:
BINKLEY & HOLMES, INC., CONSULTING ENGINEERS

APPROVED:
CHIEF ENGINEER — ASST. CHIEF ENGINEER
ASST. DIRECTORS OF PUBLIC WORKS
DIRECTOR OF PUBLIC WORKS

DESIGNED BY: M. MUNIZ
DRAWN BY: M. MUNIZ
CHECKED BY: M. P. T.
SCALE: AS NOTED
DATE: Dec., 1973
SHEET 106 OF 200 SHEETS
DRAWING NO. 18045

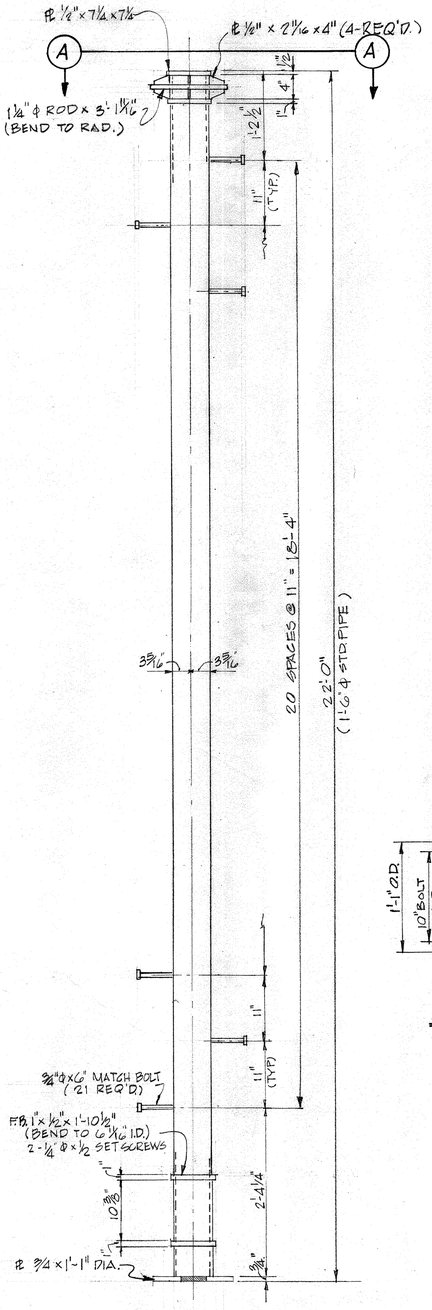

MAST ELEVATION
N.T.S.

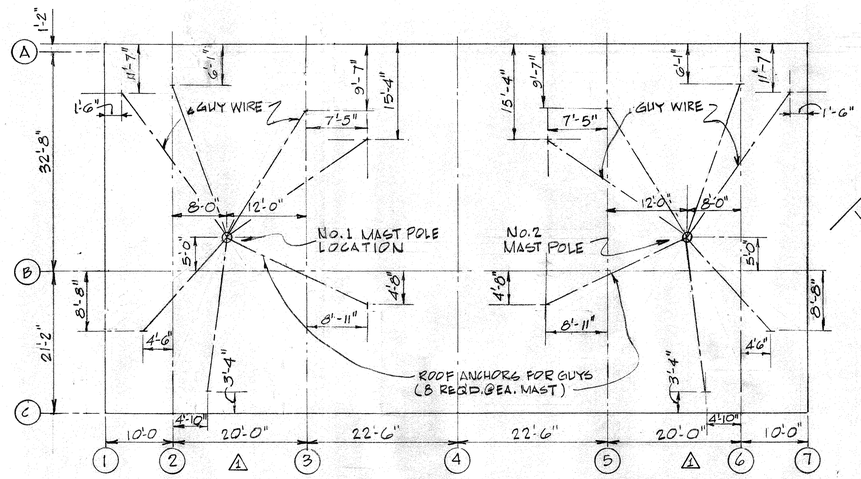

ROOF PLAN MAST LOCATION
SCALE 3/32"=1'-0"

NOTE: THIS IS SUGGESTED LOCATION OF DOWNGUY ANCHORS, FINAL LOCATION TO CLEAR ALL OBSTACLES WHILE HOLDING AS CLOSE AS POSSIBLE TO DIMENSIONS SHOWN.

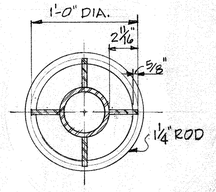

SECTION "A-A"
N.T.S.

MAST BASE PLATE
N.T.S.

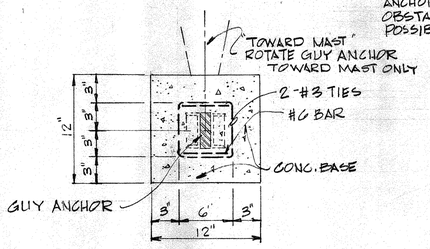

PLAN

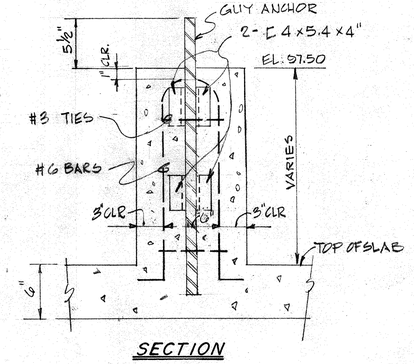

SECTION

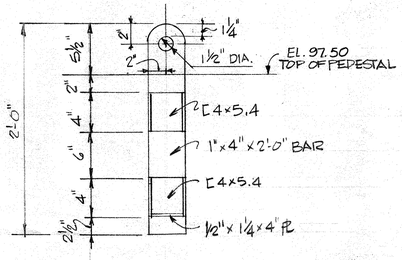

GUY-ANCHOR DETAILS
(16-REQ'D)

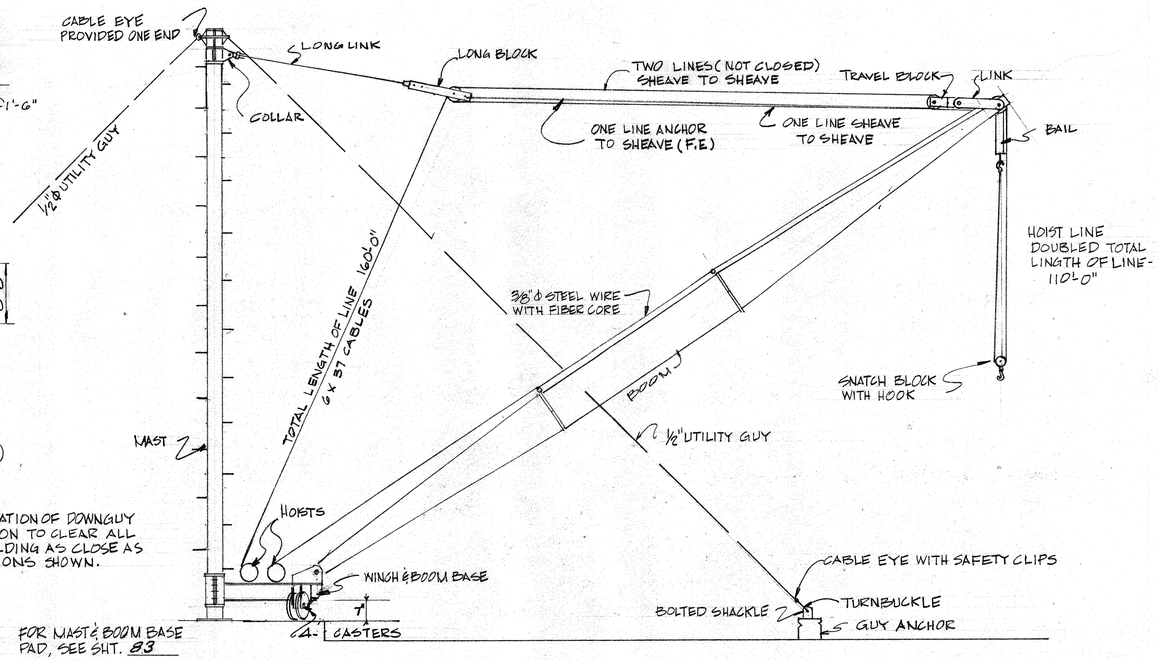

FOR MAST & BOOM BASE PAD, SEE SHT. B3

ELEVATION-PORTABLE BOOM & MAST
(2-MAST ONE WINCH DECK, ONE BOOM)
SCALE 3/8"=1'-0"

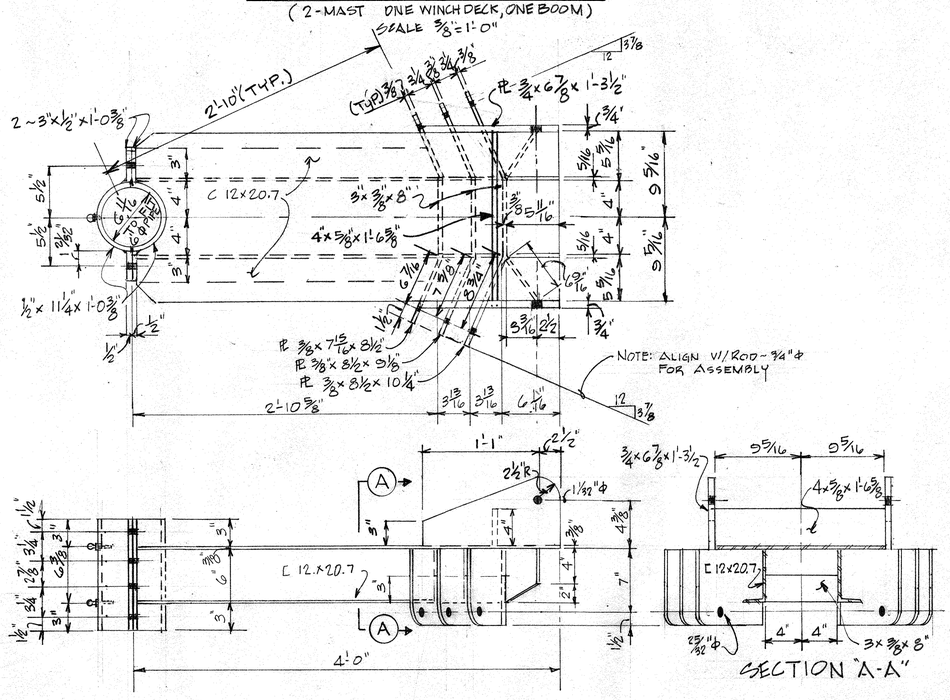

WINCH & BOOM BASE DETAILS
ONE REQ'D. SCALE 1 1/2"=1'-0"

CITY OF HOUSTON
DEPARTMENT OF PUBLIC WORKS

ALMEDA SIMS SLUDGE DISPOSAL PLANT-1973

DRYER ROOM ROOF MAST DETAILS

RECOMMENDED FOR APPROVAL:
Paul R. Holmes
BINKLEY & HOLMES, INC., CONSULTING ENGINEERS

APPROVED:
Walter Williams
CHIEF ENGINEER — ASST. CHIEF ENGINEER
ASST. DIRECTORS OF PUBLIC WORKS
E B Cape
DIRECTOR OF PUBLIC WORKS

DESIGNED BY: V. Jeri
DRAWN BY: M. MUNIZ
CHECKED BY: M. D. J.
SCALE: AS SHOWN
DATE: Dec. 1973
SHEET 107 OF 200 SHEETS
DRAWING NO. 10845

REV. NO.	DATE	DESCRIPTION	DESIGN	CHECKED
1	3-79	CONSTRUCTION REVISION RELOCATED ROOF MAST GUYS	W. W	H.J.K.

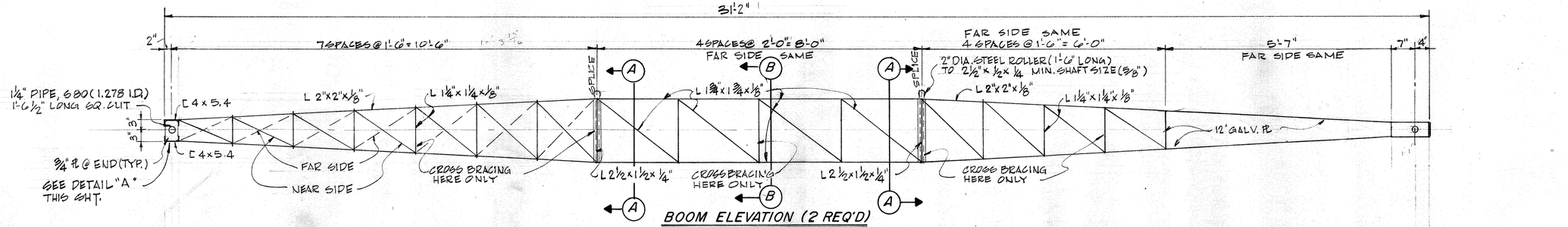

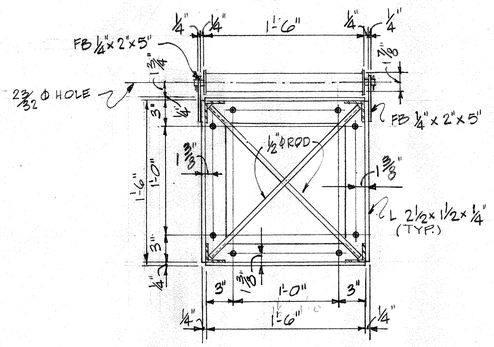

SECTION "A-A"
SCALE 1½" = 1'-0"

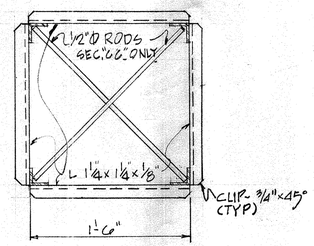

SECTION "B-B"
SCALE 1½" = 1'-0"

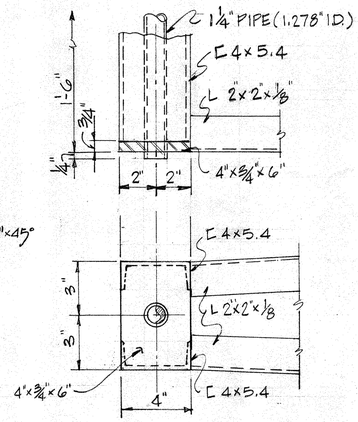

DETAIL "A"
SCALE 3" = 1'-0"

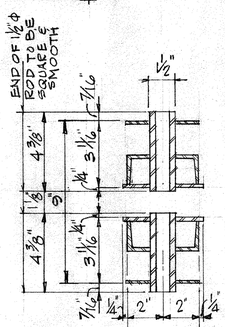

SECT "C-C"

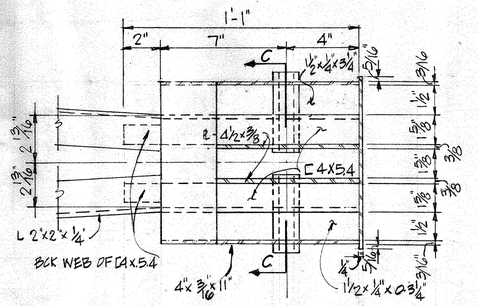

PLAN

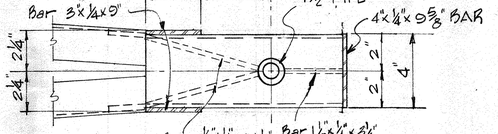

ELEV.

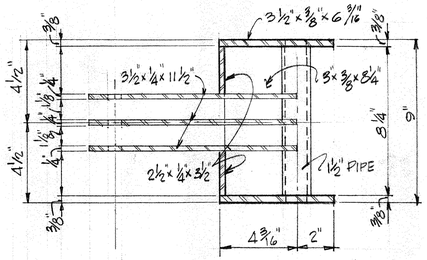

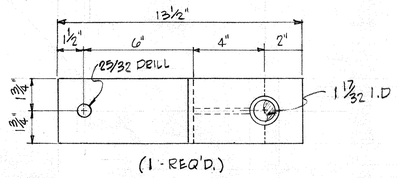

(1 - REQ'D.)

TRAVEL BLOCK DETAIL "C"
SCALE: 3" = 1'-0"

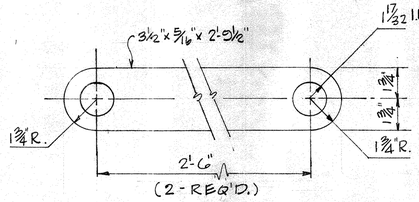

(2 - REQ'D.)

TYPICAL LINK DETIL "D"

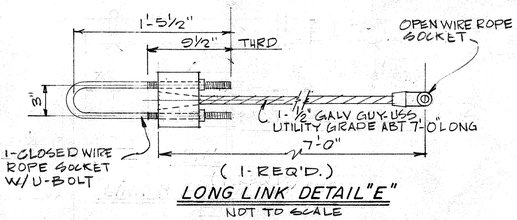

(1 - REQ'D.)

LONG LINK DETAIL "E"
NOT TO SCALE

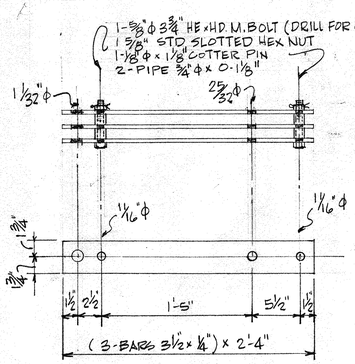

(1-REQ'D.)

LONG BLOCK DETAIL "F"
NOT TO SCALE

DETAIL "B"
SCALE: 3" = 1'-0"

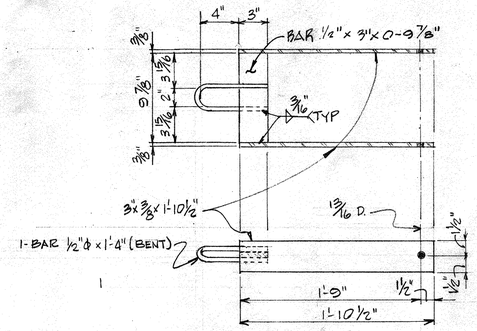

BAIL DETAIL "G"
NOT TO SCALE

CITY OF HOUSTON
DEPARTMENT OF PUBLIC WORKS

ALMEDA SIMS
SLUDGE DISPOSAL
PLANT - 1973

DRYER ROOM
PORTABLE BOOM
& DETAILS

RECOMMENDED FOR APPROVAL:
Karl K. Holmes
BINKLEY & HOLMES, INC., CONSULTING ENGINEERS

APPROVED:
Walter G. Williams
CHIEF ENGINEER — ASST. CHIEF ENGINEER
James Sandlin
ASST. DIRECTORS OF PUBLIC WORKS
E. B. Pape
DIRECTOR OF PUBLIC WORKS

DESIGNED BY: K. Jafri
DRAWN BY: M.S.J.U.N.I.Z
CHECKED BY: M. D. J.
SCALE: AS NOTED
DATE: Dec. 9 1973
SHEET 108 OF 200 SHEETS
DRAWING NO. 18045

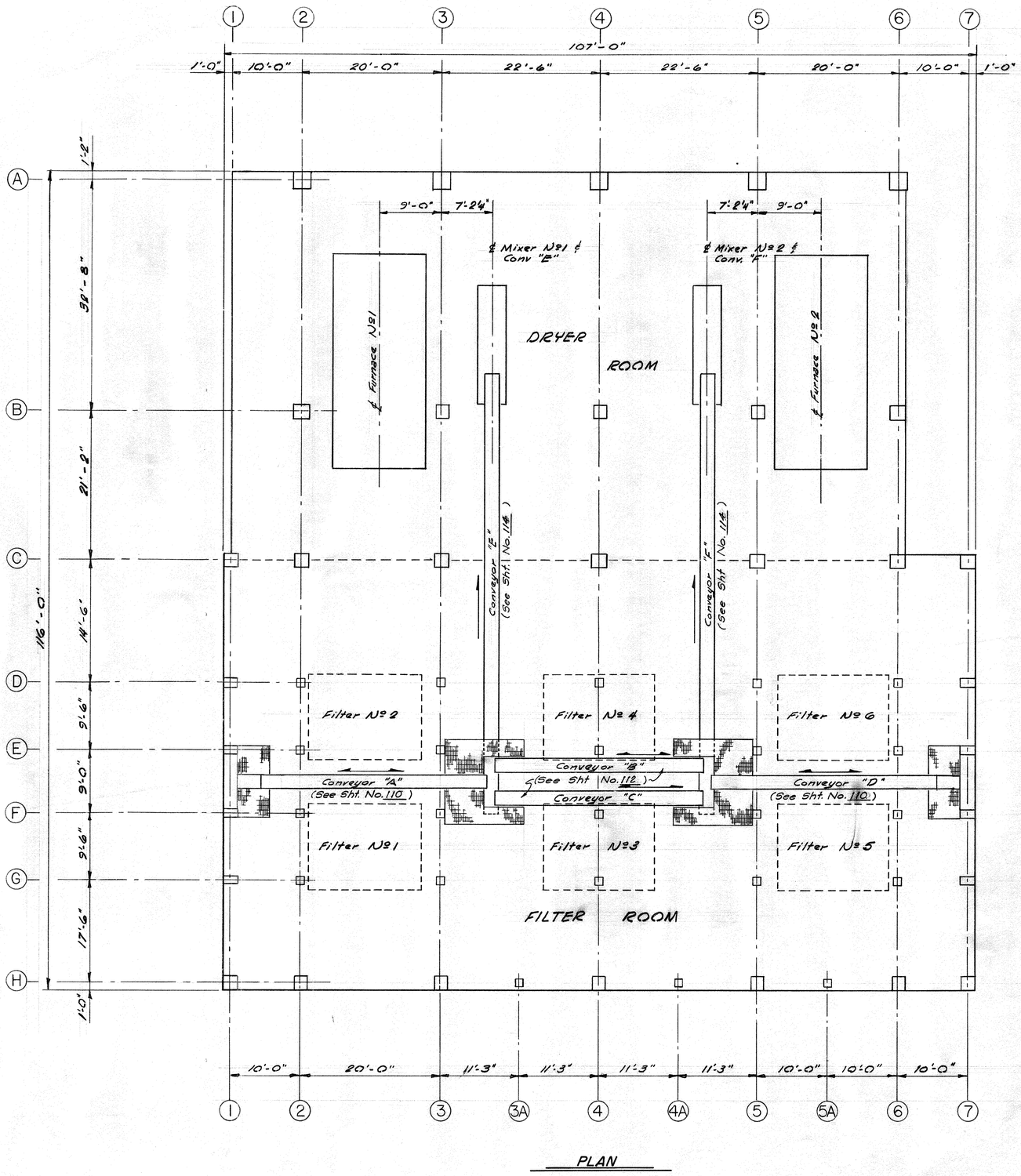

PLAN

CITY OF HOUSTON
DEPARTMENT OF PUBLIC WORKS

ALMEDA SIMS
SLUDGE DISPOSAL
PLANT – 1973

BELT
CONVEYOR LAYOUT

RECOMMENDED FOR APPROVAL:
BINKLEY & HOLMES, INC., CONSULTING ENGINEERS

APPROVED:
CHIEF ENGINEER — ASST. CHIEF ENGINEER
ASST. DIRECTORS OF PUBLIC WORKS
DIRECTOR OF PUBLIC WORKS

DESIGNED BY: M. B. J.
DRAWN BY: C.A. MARRULLIER
CHECKED BY: M. B. J.
SCALE: 3/8" = 1'-0"
DATE: Dec., 1973
SHEET 109 OF 200 SHEETS
DRAWING NO. 18045

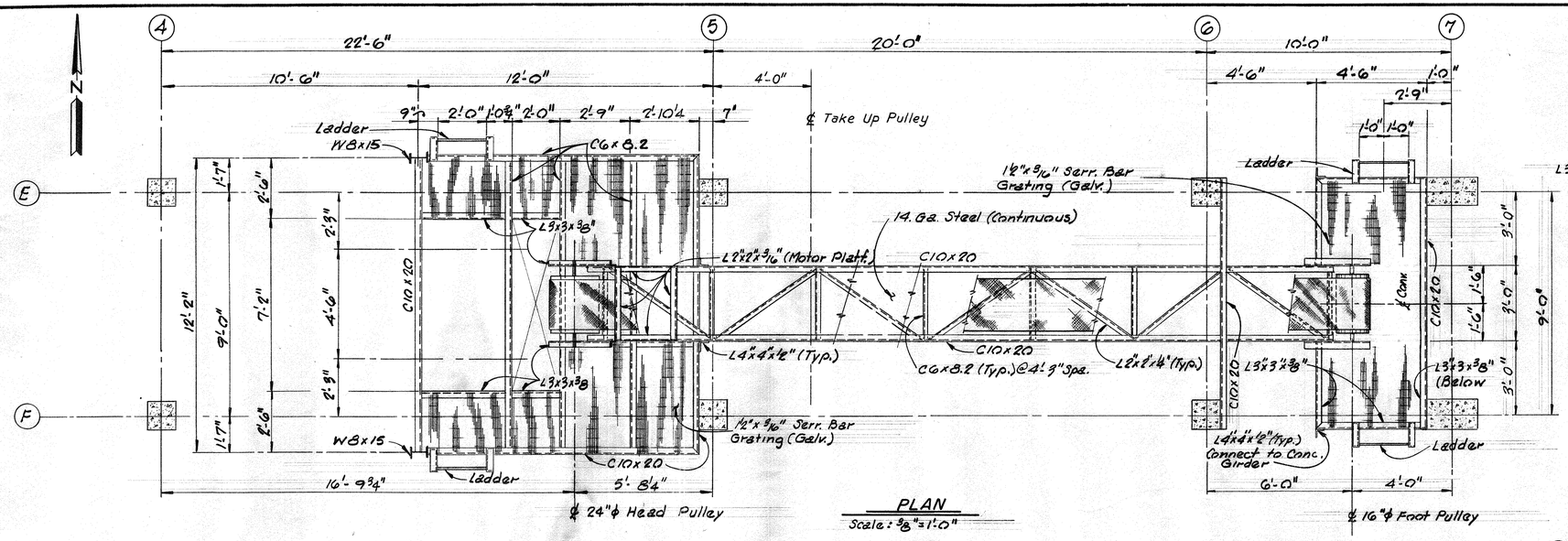

PLAN

Scale : ⅜"=1'-0"

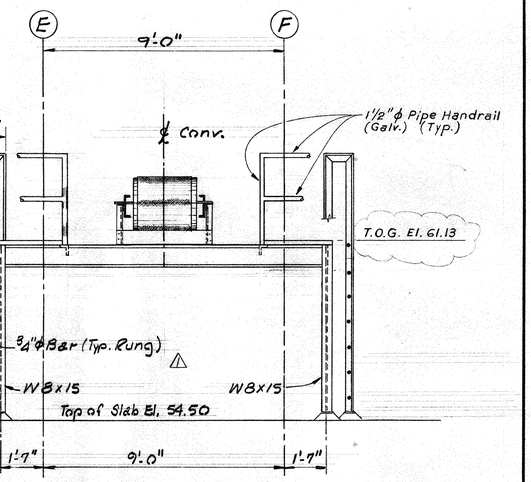

WEST END VIEW

Scale : ⅜"=1'-0"

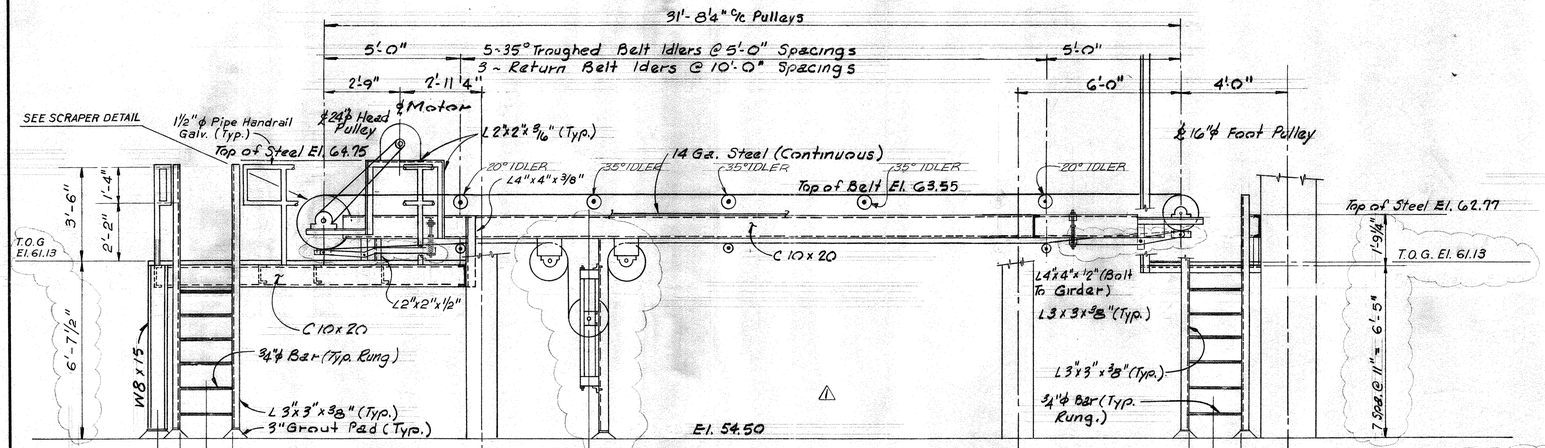

ELEVATION

Scale : ⅜" = 1'-0"

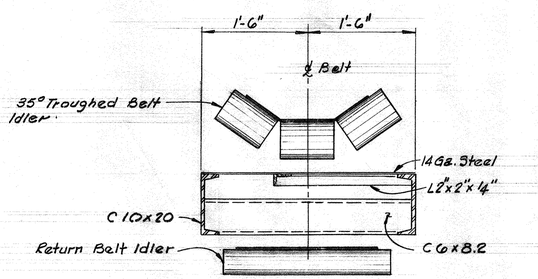

TYPICAL SECTION THRU CONVEYOR

Scale : 1" = 1'-0"

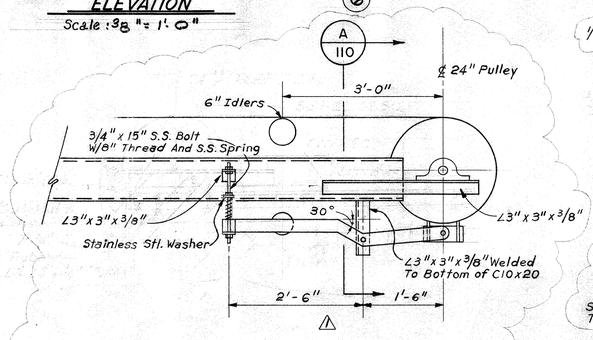

SCRAPER PLATE DETAIL - 24" PULLEY

Scale : ¾"=1'-0"

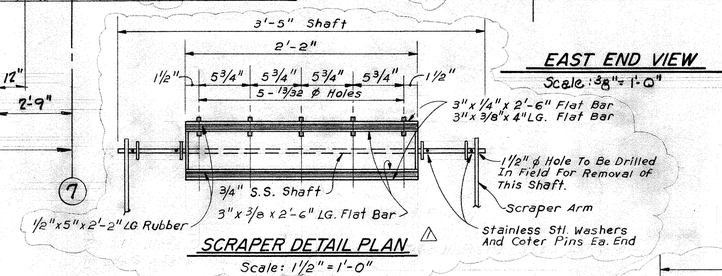

EAST END VIEW

Scale : ⅜" = 1'-0"

SCRAPER DETAIL PLAN

Scale: 1½" = 1'-0"

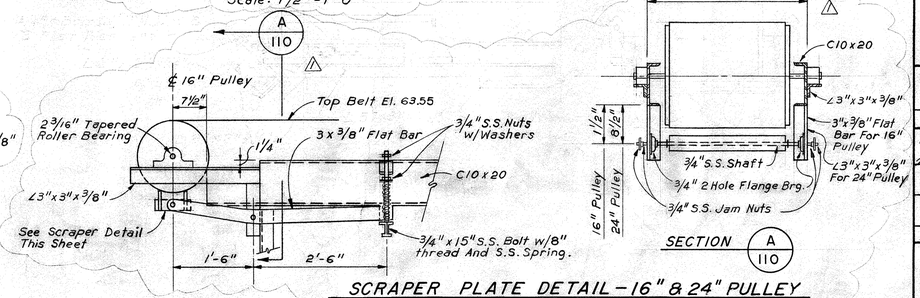

SCRAPER PLATE DETAIL - 16" & 24" PULLEY

Scale : ¾"=1'-0"

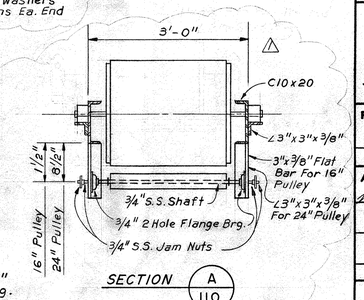

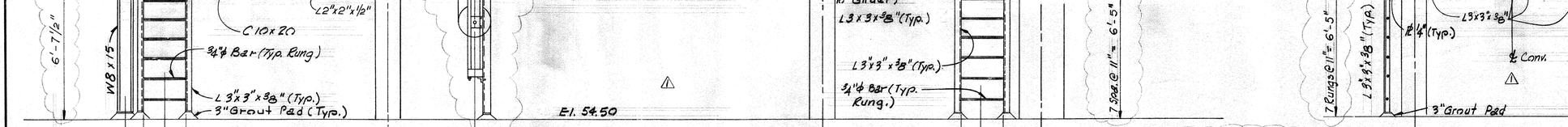

REV NO.	DATE	DESCRIPTION	DESIGN	CHECKED
1	5/79	CONSTRUCTION REVISION: CHANGED SCRAPER DETAILS - REVISED PLATFORM-ADDED UNDER BOLT MECH. TAKE UP	W.G.W.	H.J.K.

CITY OF HOUSTON
DEPARTMENT OF PUBLIC WORKS

ALMEDA SIMS
SLUDGE DISPOSAL
PLANT - 1973

CONVEYORS "A" & "D"

PLAN, ELEV. & DETAILS

RECOMMENDED FOR APPROVAL:
BINKLEY & HOLMES, INC., CONSULTING ENGINEERS

APPROVED:
CHIEF ENGINEER — ASST. CHIEF ENGINEER
ASST. DIRECTORS OF PUBLIC WORKS
DIRECTOR OF PUBLIC WORKS

DESIGNED BY: M.D.J.
DRAWN BY: G.T. RYAN
CHECKED BY: M.D.J.
SCALE: AS SHOWN
DATE: Dec., 1973
SHEET 110 OF 200 SHEETS
DRAWING NO. 18045

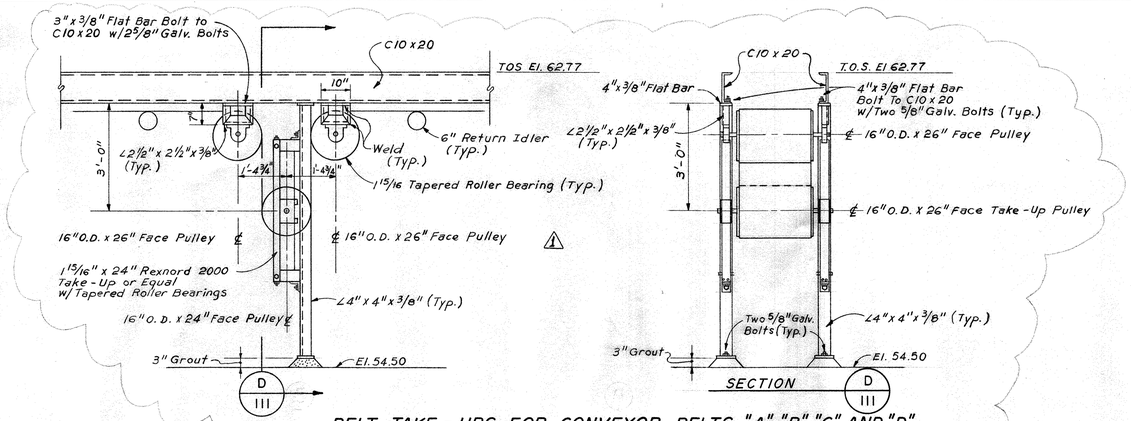

BELT TAKE-UPS FOR CONVEYOR BELTS "A" "B" "C" AND "D"

Scale: 1/2" = 1'-0"

DETAIL E III

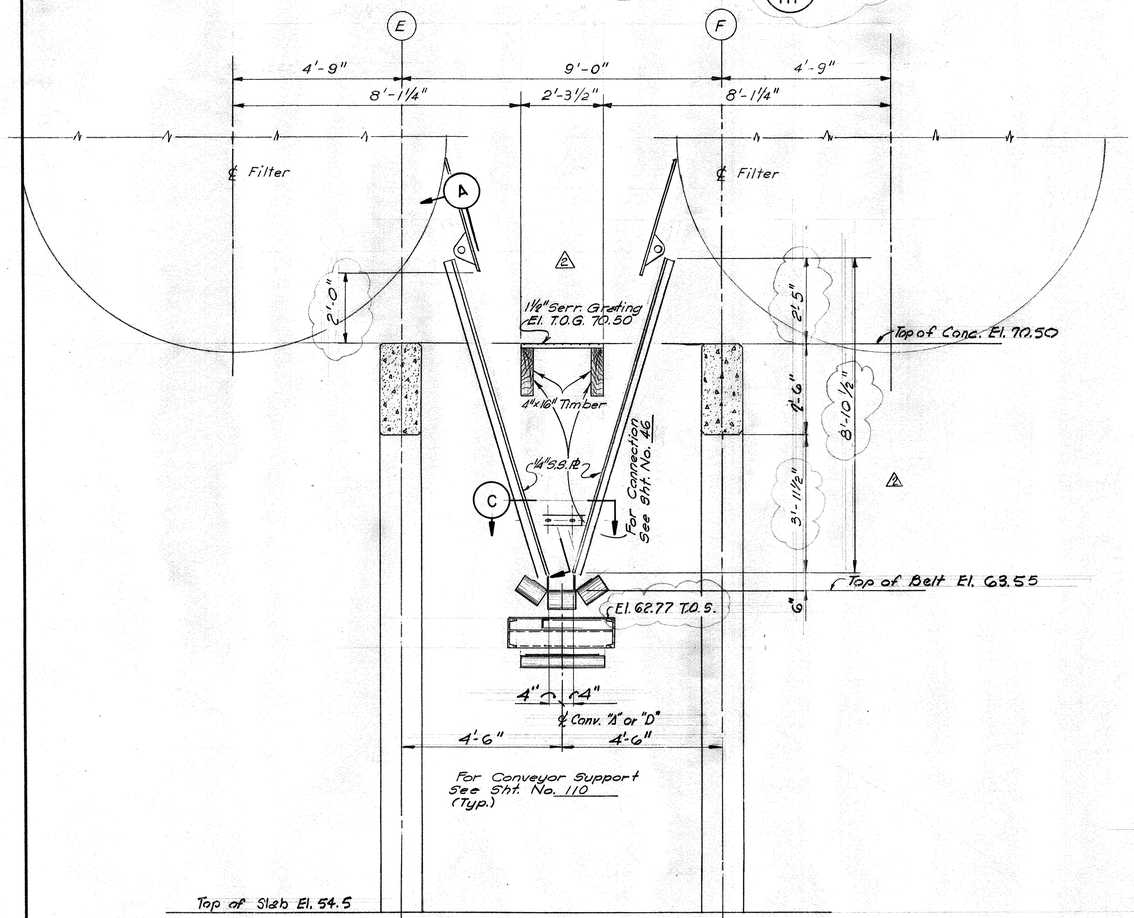

TYPICAL SECTION THRU FILTER HOPPER AT CONVEYOR "A" & "D"

Scale: 1/2" = 1'-0"

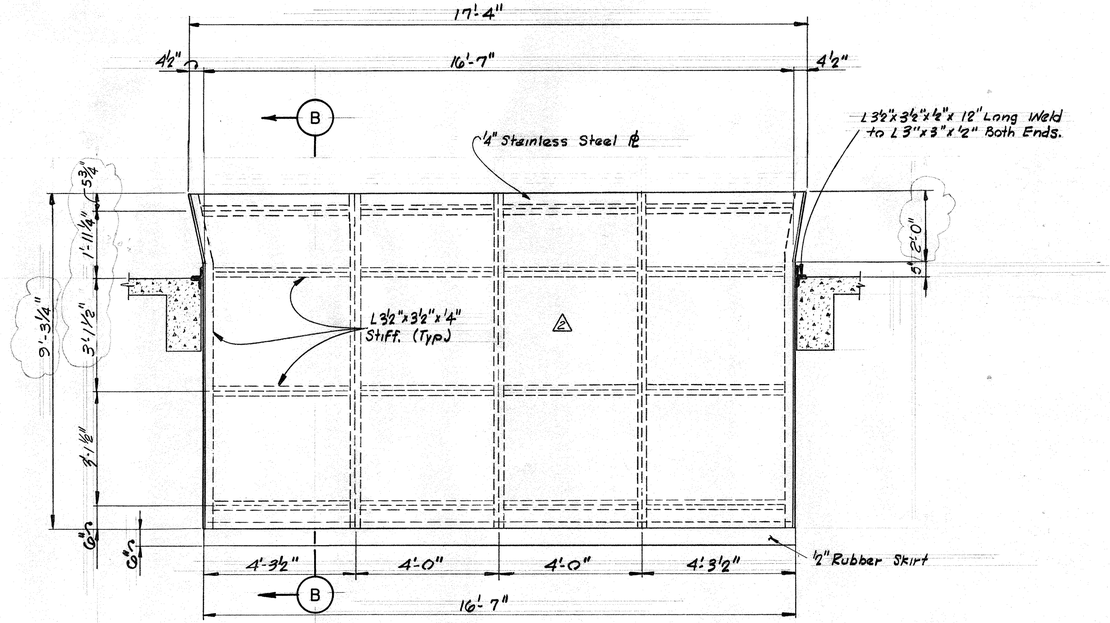

ELEVATION OF HOPPER A

Scale: 1/2" = 1'-0"

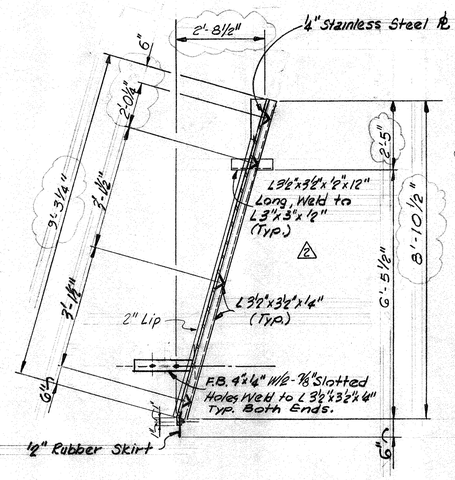

SECTION B

Scale: 1/2" = 1'-0"

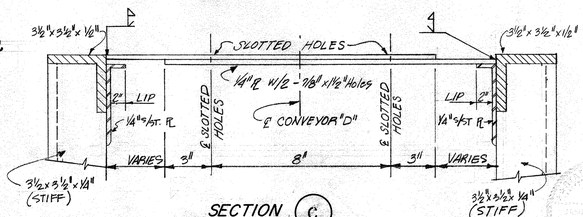

SECTION C

CITY OF HOUSTON
DEPARTMENT OF PUBLIC WORKS

ALMEDA SIMS
SLUDGE DISPOSAL
PLANT – 1973

FILTER HOPPER DETAILS
AT CONVEYORS "A" & "D"

RECOMMENDED FOR APPROVAL:
Binkley & Holmes
BINKLEY & HOLMES, INC., CONSULTING ENGINEERS

APPROVED:
Walter Williams
CHIEF ENGINEER — ASST. CHIEF ENGINEER
ASST. DIRECTORS OF PUBLIC WORKS
E.B. Pape
DIRECTOR OF PUBLIC WORKS

Rev No.	Date	Description	Design	Checked
2	5/79	Construction Rev. Changed Hopper Dimensions	WGW	HJK
1	2/79	Construction Rev. – Add Manual Take-Up Underneath Belts A-B-C-D	WGW	HJK

DESIGNED BY: M.B.J.
DRAWN BY: G.T.Ryan
CHECKED BY: M.B.J.
SCALE: As Shown
DATE: Dec. 1973
SHEET 111 OF 200 SHEETS
DRAWING NO. 18045

100

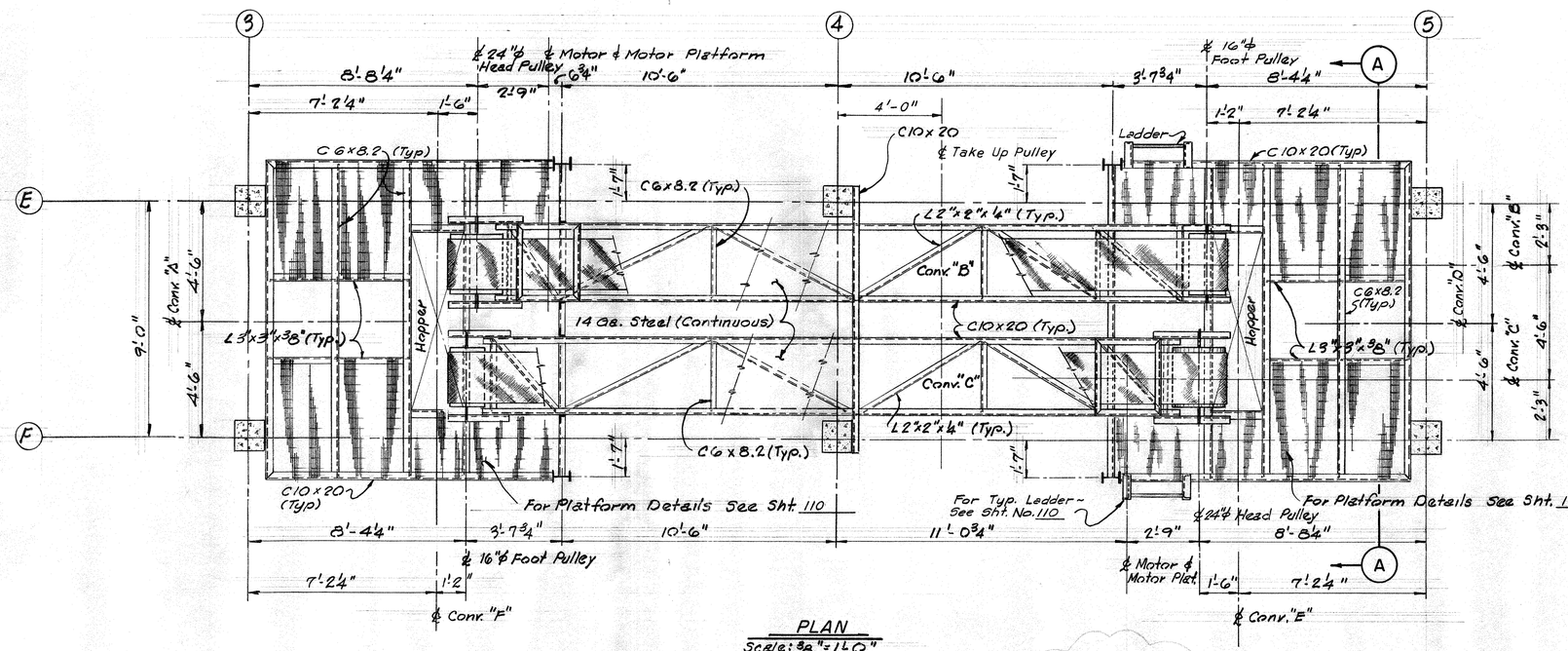

PLAN

Scale: ⅜"=1'-0"

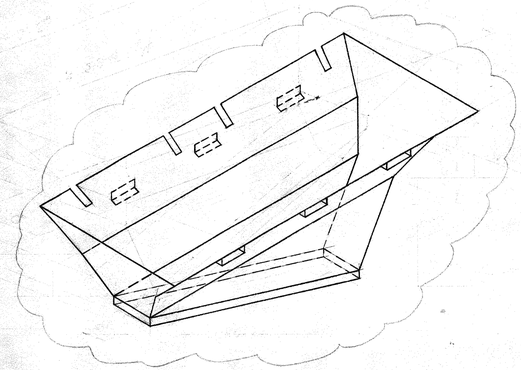

HOPPER - ISOMETRIC

Notes:
1. For Filter Hopper Details See Sht. 113
2. ALL Steel to be Hot Dip Galv. After Fabrication

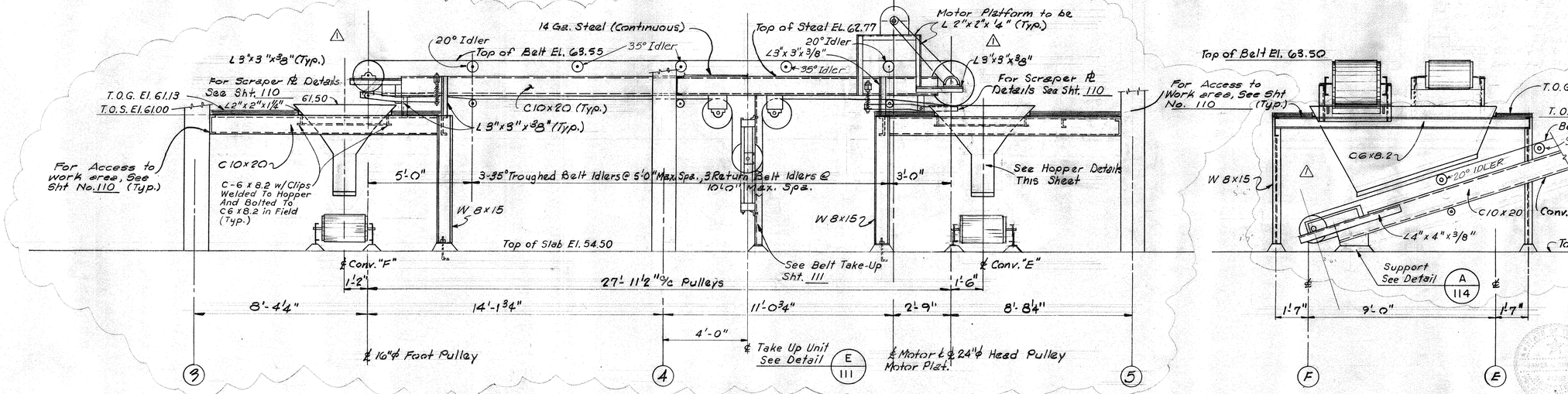

ELEVATION

Scale: ⅜"=1'-0"

SECTION A

Scale: ⅜"=1'-0"

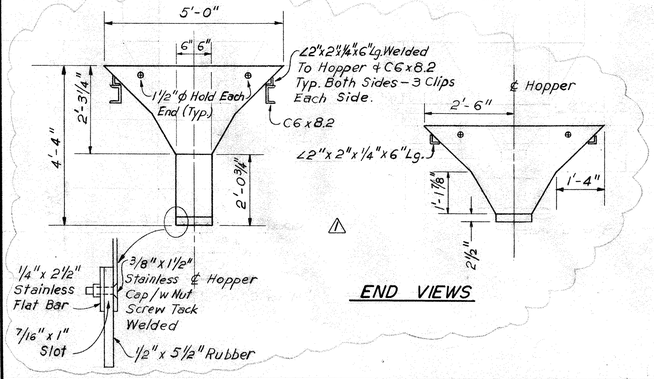

END VIEWS

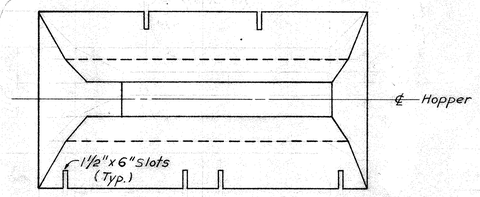

PLAN

Note: Hopper as drawn for discharge end of Conveyor "A" for discharge end. Conveyor "D" change cut out slots to Opposite sides.

HOPPER DETAILS

Scale: ½"=1'-0"

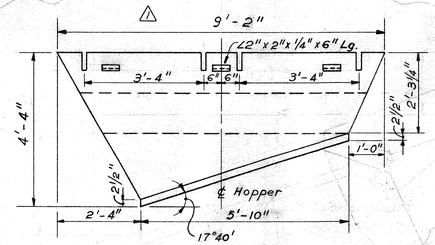

SIDE VIEW

REV. NO.	DATE	DESCRIPTION	DESIGN	CHECKED
1	5-79	Construction Revision Redesign Scraper-Under Belt Take-ups Redesign Hopper- Raise Platform Steel	WGW	

CITY OF HOUSTON
DEPARTMENT OF PUBLIC WORKS

ALMEDA SIMS
SLUDGE DISPOSAL
PLANT - 1973

CONVEYORS "B" "C"

PLAN, ELEV. & DETAILS

RECOMMENDED FOR APPROVAL:
BINKLEY & HOLMES, INC., CONSULTING ENGINEERS

APPROVED:
CHIEF ENGINEER — ASST. CHIEF ENGINEER
ASST. DIRECTORS OF PUBLIC WORKS
DIRECTOR OF PUBLIC WORKS

DESIGNED BY: M.P.J.
DRAWN BY: G.T. RYAN
CHECKED BY: M.P.J.
SCALE: As Shown
DATE: Dec. 9 1973
SHEET 112 OF 200 SHEETS
DRAWING NO. 18045

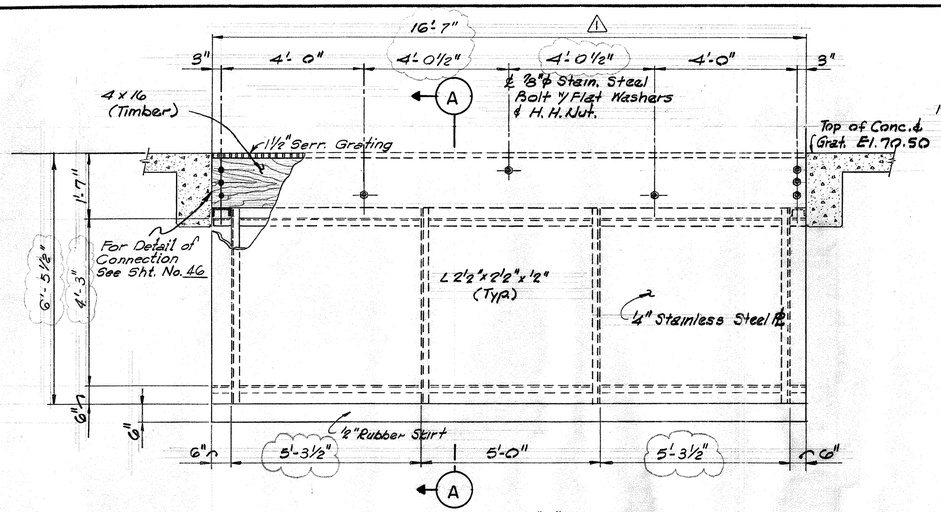

ELEVATION - TYPE "A" PANEL
(2 Reqd)
Scale : ½" = 1'-0"

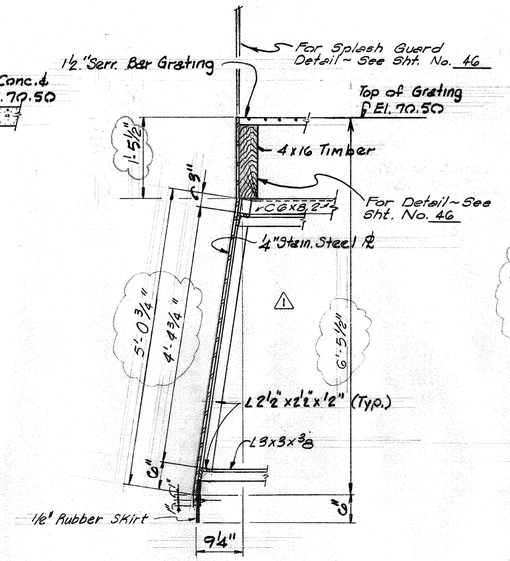

SECTION A
Scale : ¾" = 1'-0"

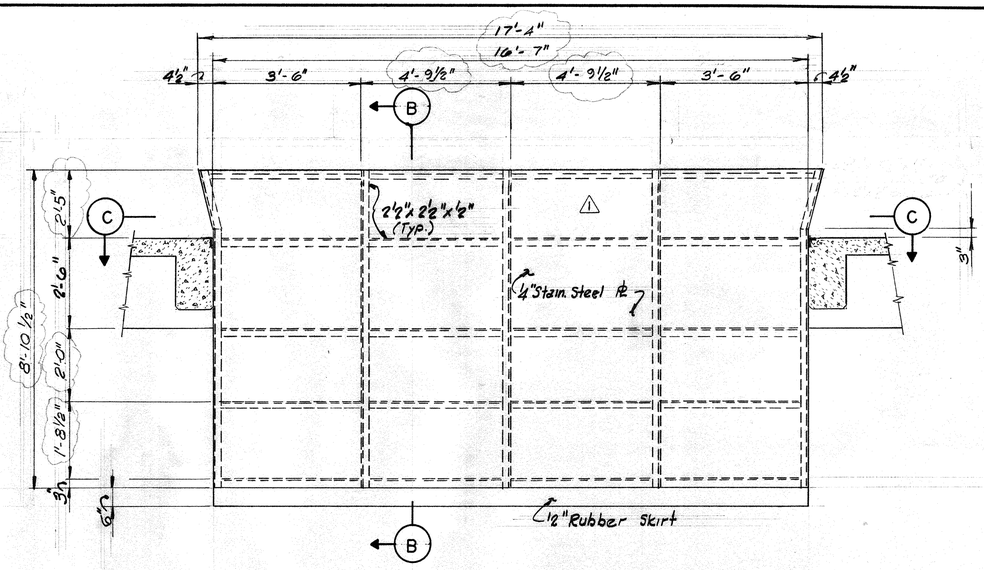

ELEVATION - TYPE "B" PANEL
(2 Req'd)
Scale : ½" = 1'-0"

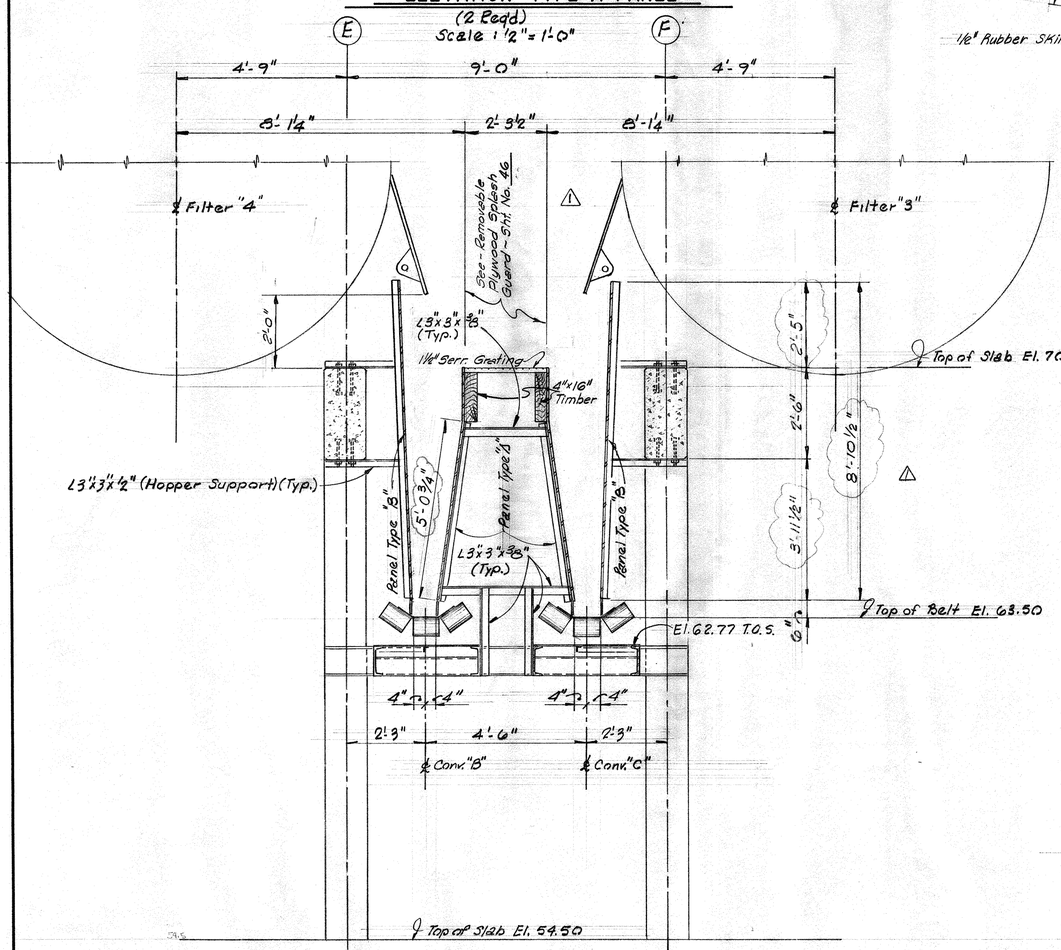

TYPICAL SECTION THRU FILTER HOPPER AT CONVEYORS "B" & "C"
Scale : ½" = 1'-0"

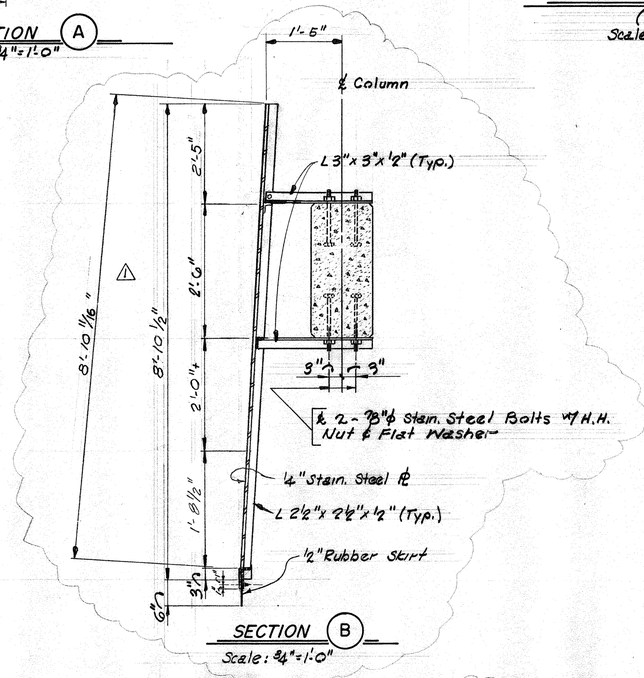

SECTION B
Scale : ¾" = 1'-0"

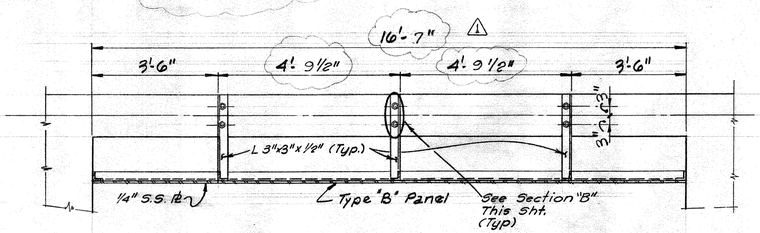

SECTION C
Scale : ½" = 1'-0"

Rev. No.	Date	Description	Design	Checked
1	5-79	Construction Rev. Changed Hopper Dimensions	W.G.W.	H.J.K.

CITY OF HOUSTON
DEPARTMENT OF PUBLIC WORKS

ALMEDA SIMS
SLUDGE DISPOSAL
PLANT - 1973

FILTER HOPPER DETAILS
AT CONVEYORS "B" & "C"

RECOMMENDED FOR APPROVAL:
BINKLEY & HOLMES, INC., CONSULTING ENGINEERS

APPROVED:
CHIEF ENGINEER — ASST. CHIEF ENGINEER
ASST. DIRECTORS OF PUBLIC WORKS
DIRECTOR OF PUBLIC WORKS

DESIGNED BY: M.B.J.
DRAWN BY: G.T. RYAN
CHECKED BY: M.B.J.
SCALE: As Shown
DATE: Dec. 2 1973
SHEET 113 OF 200 SHEETS
DRAWING NO. 18045

102

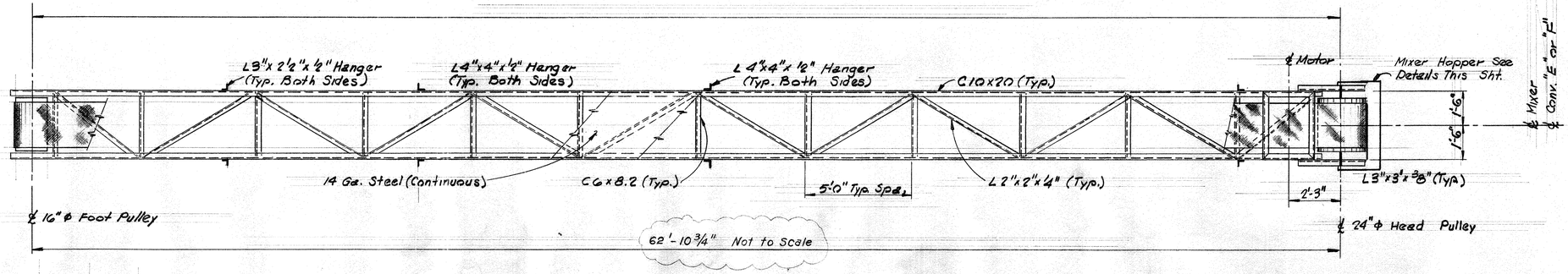

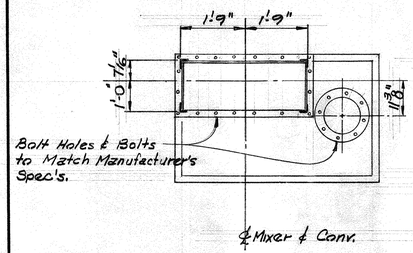

PLAN

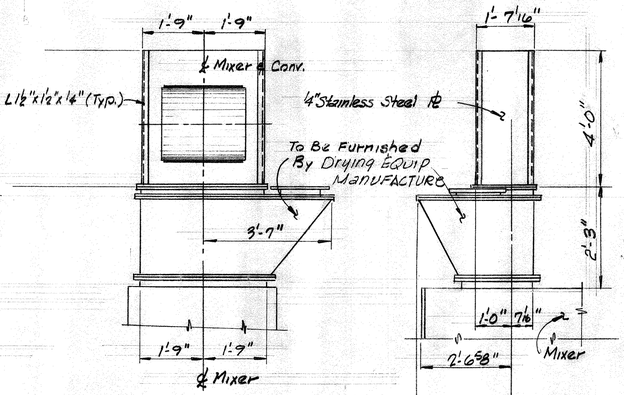

FRONT ELEVATION

SIDE ELEVATION

MIXER HOPPER DETAILS
Scale : ½"=1'-0"

PLAN
Scale: ⅜"=1'-0"

Notes :
1. All Steel Other then Stainless to be Hot-Dip Galv. after Fabrication

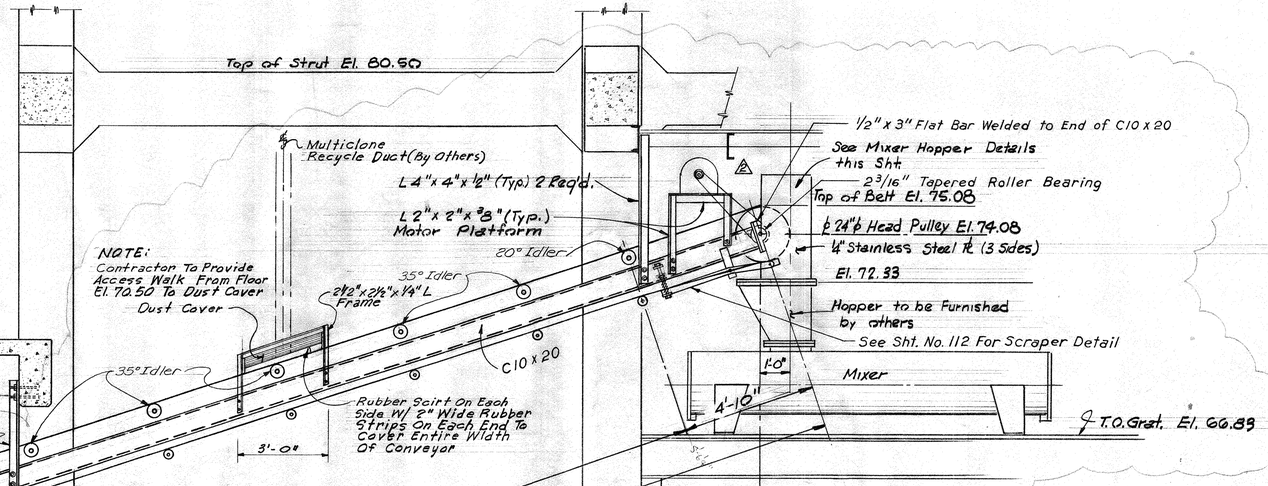

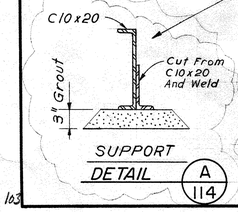

SUPPORT DETAIL A 114

ELEVATION
Scale: ⅜"=1'-0"

REV. NO.	DATE	DESCRIPTION	DESIGN	CHECKED
2	5-79	Change 24" Pulley Brg. Inst. Raised Tail Pulley Elevation	WGW	HJK
1	3-77	Add Dust Cover	JCS	SRS

CITY OF HOUSTON
DEPARTMENT OF PUBLIC WORKS

ALMEDA SIMS SLUDGE DISPOSAL PLANT - 1973

CONVEYORS "E" & "F"

PLAN, ELEV. & DETAILS

RECOMMENDED FOR APPROVAL:
Paul W. Holmes
BINKLEY & HOLMES, INC., CONSULTING ENGINEERS

APPROVED:
Walter G. Williams
CHIEF ENGINEER — ASST. CHIEF ENGINEER
ASST. DIRECTORS OF PUBLIC WORKS
E. Brace
DIRECTOR OF PUBLIC WORKS

DESIGNED BY: M. D. J.
DRAWN BY: G. T. RYAN
CHECKED BY: M. D. J.
SCALE: As Shown
DATE: Dec. 2 1973
SHEET 114 OF 200 SHEETS
DRAWING NO. 18045

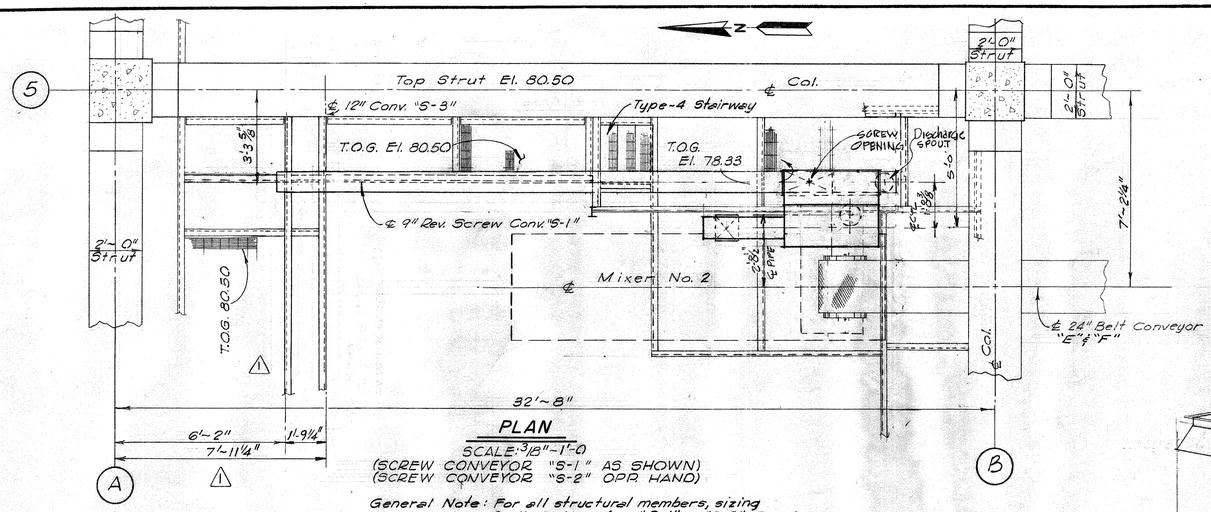

PLAN

SCALE: 3/8"-1'-0"

(SCREW CONVEYOR "S-1" AS SHOWN)
(SCREW CONVEYOR "S-2" OPP. HAND)

General Note: For all structural members, sizing & dimensions, for "S-1" or "S-2" Framing See Sht. No. 95

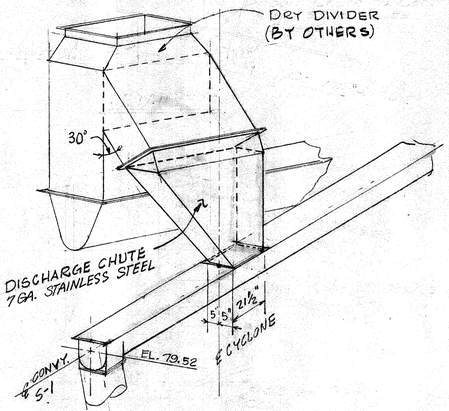

Discharge Chute Isometric

N.T.S.

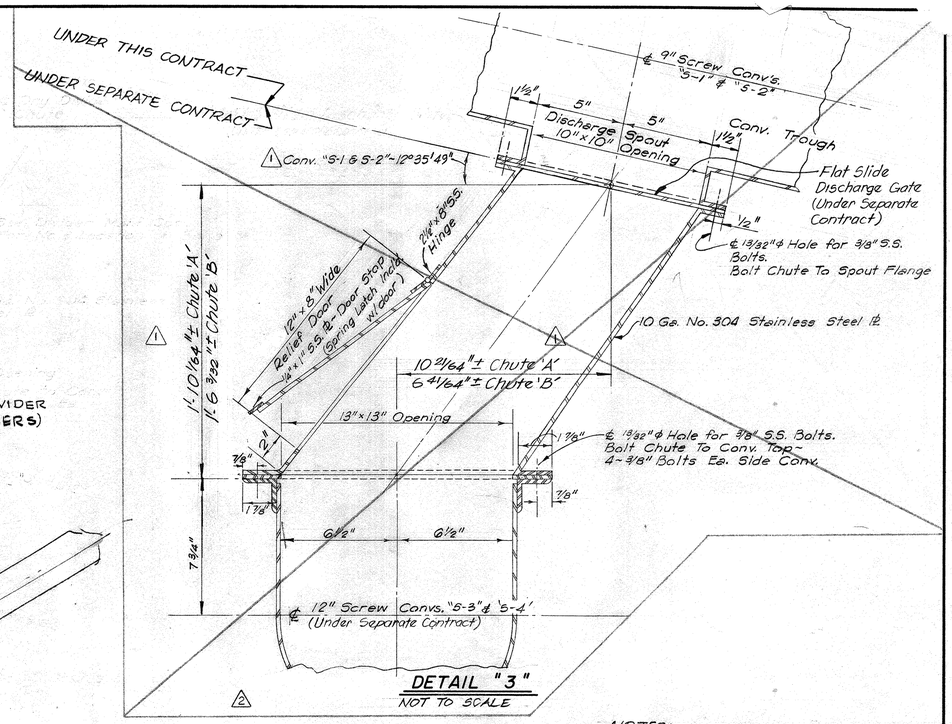

DETAIL "3"

NOT TO SCALE

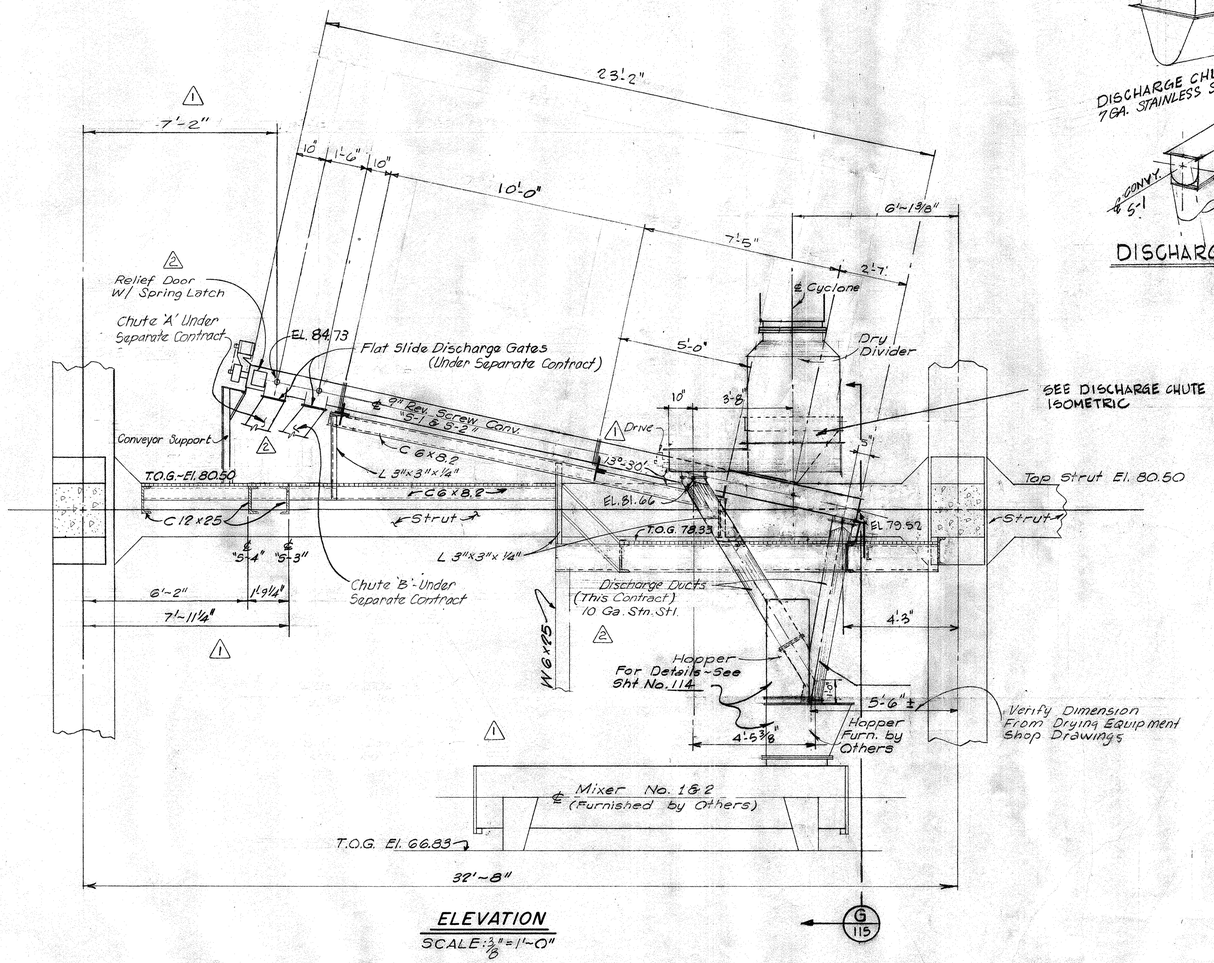

ELEVATION

SCALE: 3/8"=1'-0"

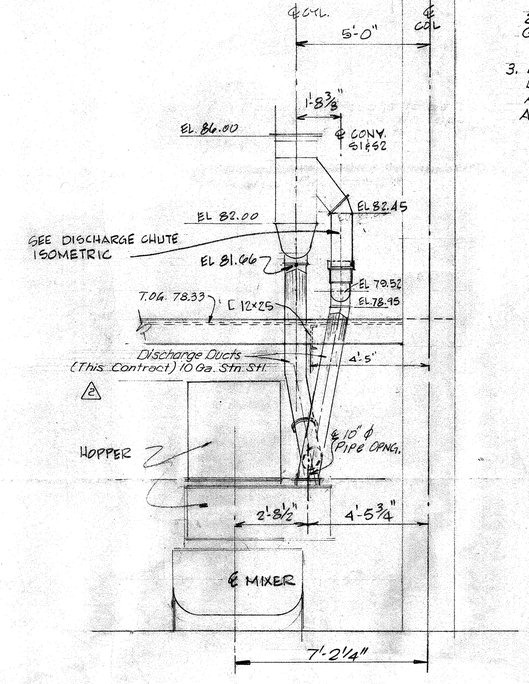

SECTION

SCALE 3/8"-1'-0" G 115

NOTES:

1. ALL CONVEYOR TROUGHS & COVERS TO BE 12 GA. N° 304-SS. ANGLE TOPS & END FLANGES TO BE 10 GA. MILD STEEL
2. SUPPORTS & WALKWAYS TO BE HOT-DIP GALV. AFTER FABRICATION.
3. DRY DIVIDER FURNISHED BY DRYING EQUIPMENT MANUFACTURER. ANY DIMENSION CHANGES TO BE ADJUSTED ON SHOP DRAWINGS

REV. N°	DATE	DESCRIPTION	DESIGN	CHECKED
2	6-77	CHANGE DISCHARGE DUCTS TO THIS CONTRACT & ADD RELIEF DOOR, DETAIL "3" DELETED	J.C.S	K.R.L
1	1-11-77	SCREW CONV. LAYOUT REVISED SCREW CONV. S-4 ADDED CHUTE LAYOUT (DETAIL 3) REVISED VENT PIPE REMOVED	J.C.S.	S.R.S.

CITY OF HOUSTON
DEPARTMENT OF PUBLIC WORKS

ALMEDA SIMS
SLUDGE DISPOSAL
PLANT — 1973

CONVEYORS
SCREW CONVEYORS
"S-1", "S-2" & DETAILS

RECOMMENDED FOR APPROVAL:
Karl R. Holmes
BINKLEY & HOLMES, INC., CONSULTING ENGINEERS

APPROVED:
Walter Williams
CHIEF ENGINEER
ASST. CHIEF ENGINEER
ASST. DIRECTORS OF PUBLIC WORKS
DIRECTOR OF PUBLIC WORKS

DESIGNED BY: M. D. J.
DRAWN BY: R. W. Massey
CHECKED BY: M. D. J.
SCALE: As Shown
DATE: Dec. 9 1973
SHEET 115 OF 200 SHEETS
DRAWING NO. 18045

10f

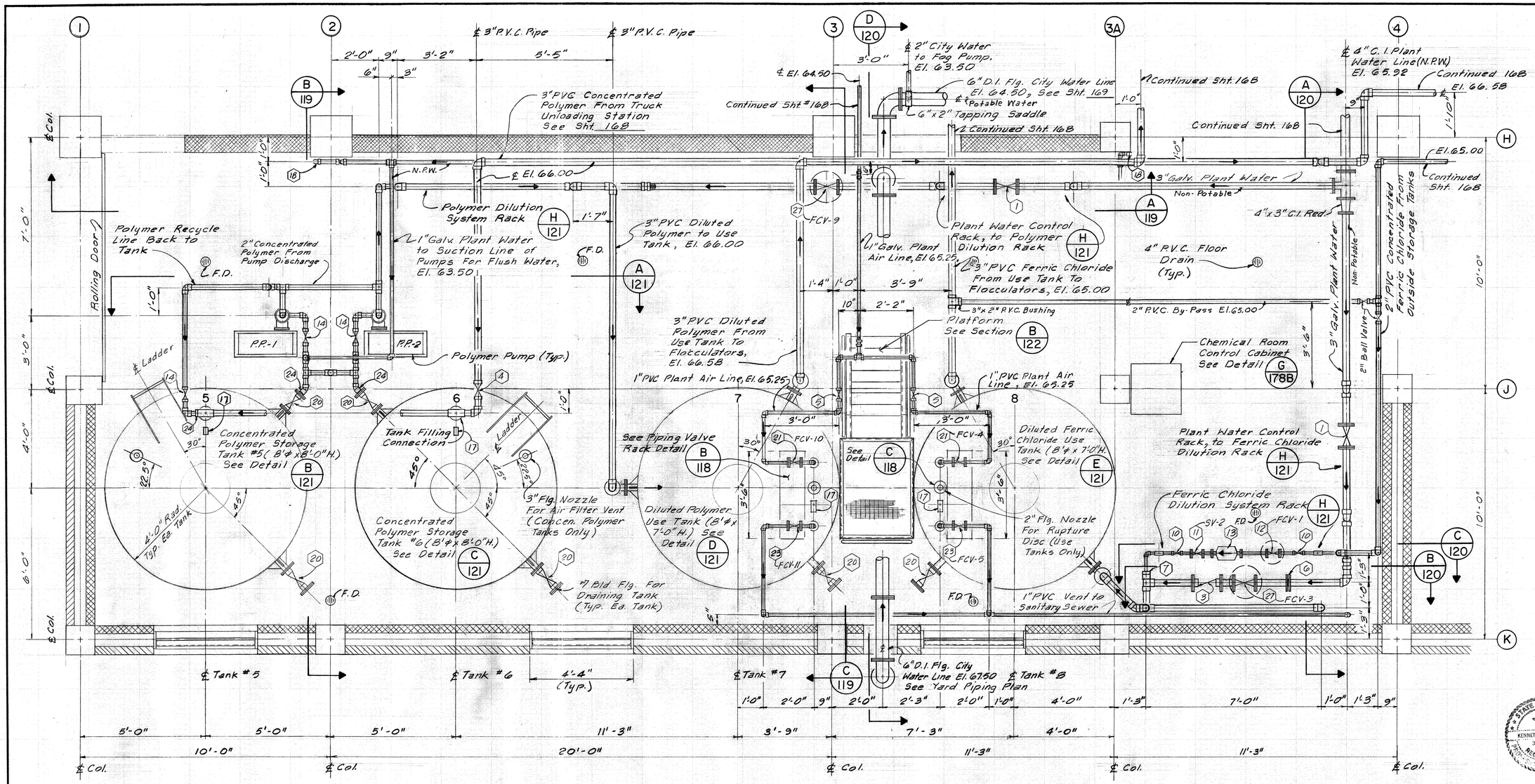

PLAN @ ELEV. 54.50 (A 118)

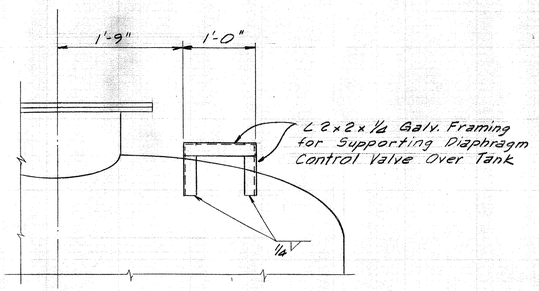

PIPING VALVE RACK DETAIL (B 118)
Scale: 1"=1'-0"
Typ. @ Tanks #7 & #8

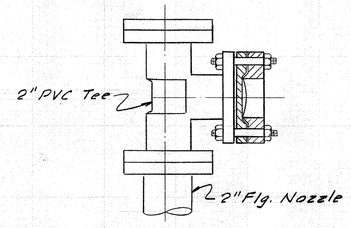

RUPTURE DISC DETAIL (C 118)
N.T.S.

Rev. No.	Date	Description	Design	Checked
1	11-78	Permit Revisions	H.J.K.	K.R.L.

VALVES AND EQUIPMENT SCHEDULE

ITEM NO.	DESCRIPTION
1	3" Flg. O.S. & Y. Gate Valve
2	3" Flg. Flow Rate Control Valve (FCV-2) (FCV-8)
3	3" Flg. PVC Ball Check Valve
4	3" True Union PVC Ball Valve
5	1" Screwed Gate Valve
6	Orifice Plate
7	3"x1" PVC Reducing Bushing
8	2"x1" PVC Reducing Bushing
9	1" Water Pressure Regulator
10	1" True Union PVC Ball Valve
11	1" Flg. Solenoid Valve (SV-2)
12	1" Flg. Diaphragm Control Valve (FCV-1)
13	1" Magnetic Flow Meter
14	2" True Union PVC Ball Valve
15	2" PVC Ball Check Valve With Integral Unions
16	2"x1/2" PVC Reducing Bushing
17	Liquid Level Sensor (LE-5 thru LE-8)
18	3/4" Galv. Hose Valve Hose Connection
19	
20	3" Flg. True Union Ball Valve
21	1" Flg. Diaphragm Control Valve (FCV-4) (FCV-10)
22	Pressure Transmitter (PT-1) (PT-6)
23	1" Flg. Diaphragm Control Valve (FCV-5) (FCV-11)
24	3"x2" PVC Reducing Bushing
25	3" Flg. S.S. Static Mixer 3'-0" Lg.
26	Pressure Transmitter (PT-) (PT-)
27	3" Flg. Flow Control Valve (FCV-3) (FCV-9)
28	1" PVC Ball Check Valve With Integral Unions

CITY OF HOUSTON
DEPARTMENT OF PUBLIC WORKS

ALMEDA-SIMS
SLUDGE DISPOSAL
PLANT - 1973

CHEMICAL ROOM
FLOOR PLAN

RECOMMENDED FOR APPROVAL:
Kenneth R. Lindsey
BINKLEY & HOLMES, INC., CONSULTING ENGINEERS

APPROVED:

CHIEF ENGINEER — ASST. CHIEF ENGINEER

ASST. DIRECTORS OF PUBLIC WORKS

DIRECTOR OF PUBLIC WORKS

DESIGNED BY: D.C.
DRAWN BY: B.J.L.
CHECKED BY: S.R.S.
SCALE: 1/2" = 1'-0"
DATE: Mar. , 1977
SHEET 118 OF 200 SHEETS
DRAWING NO. 18045

STATE OF TEXAS — KENNETH R. LINDSEY — 31158 — REGISTERED PROFESSIONAL ENGINEER

STATE OF TEXAS — J.C. SUMAN — 40887 — REGISTERED PROFESSIONAL ENGINEER

NOTE:
1. Valves & Equipment Schedule See Sheet 118.
2. Plant Water Is Non-Potable Water (N.P.W.)

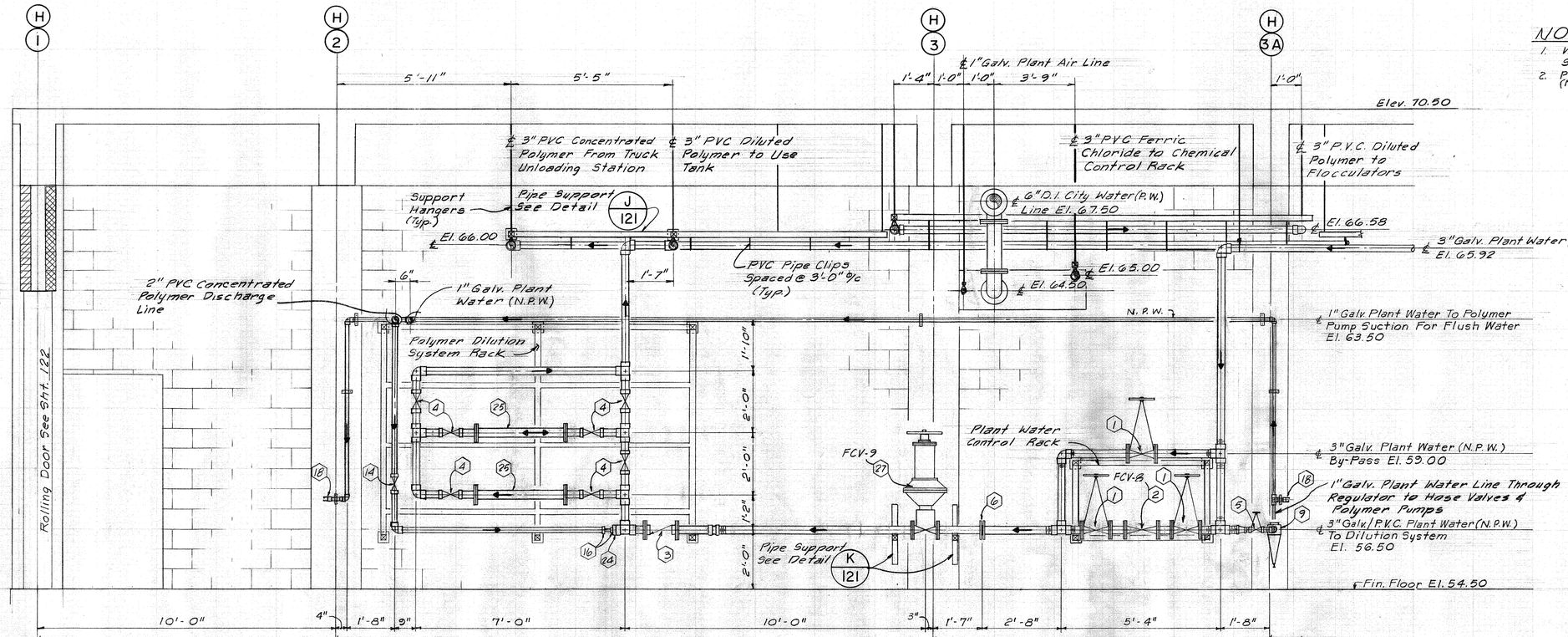

SECTION A / 119

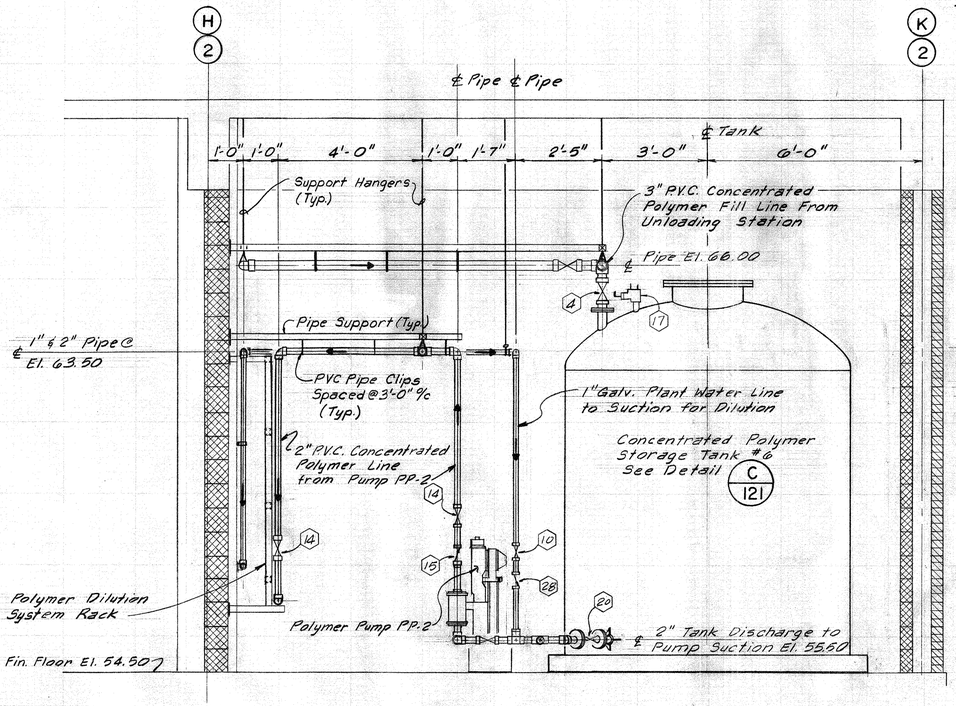

SECTION B / 119

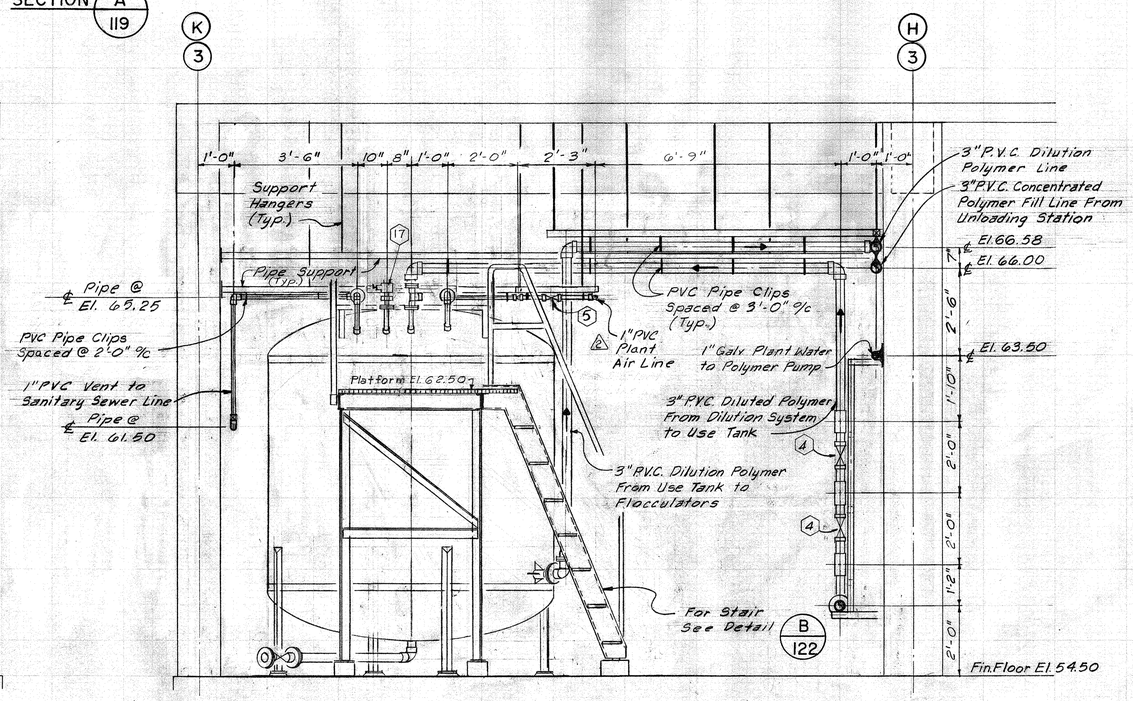

SECTION C / 119

Rev. No	Date	Description	Design	Checked
2	11-78	Construction Revision Rev. Piping & Platform	H.J.K.	K.R.L.
1	11-78	Permit Revision	H.J.K.	K.R.L.

STATE OF TEXAS — KENNETH R. LINDSEY 31158 REGISTERED PROFESSIONAL ENGINEER

STATE OF TEXAS — J. C. SUMAN 10927 REGISTERED PROFESSIONAL ENGINEER

CITY OF HOUSTON
DEPARTMENT OF PUBLIC WORKS

ALMEDA-SIMS SLUDGE DISPOSAL PLANT-1973

CHEMICAL ROOM SECTIONS

RECOMMENDED FOR APPROVAL:
Kenneth R. Lindsey
BINKLEY & HOLMES, INC., CONSULTING ENGINEERS

APPROVED:

CHIEF ENGINEER — ASST. CHIEF ENGINEER

ASST. DIRECTORS OF PUBLIC WORKS

DIRECTOR OF PUBLIC WORKS

DESIGNED BY: D.C.
DRAWN BY: B.J.L.
CHECKED BY: S.R.S.
SCALE: 1/2" = 1'-0"
DATE: Mar. 1977
SHEET 119 OF 200 SHEETS
DRAWING NO. 18045

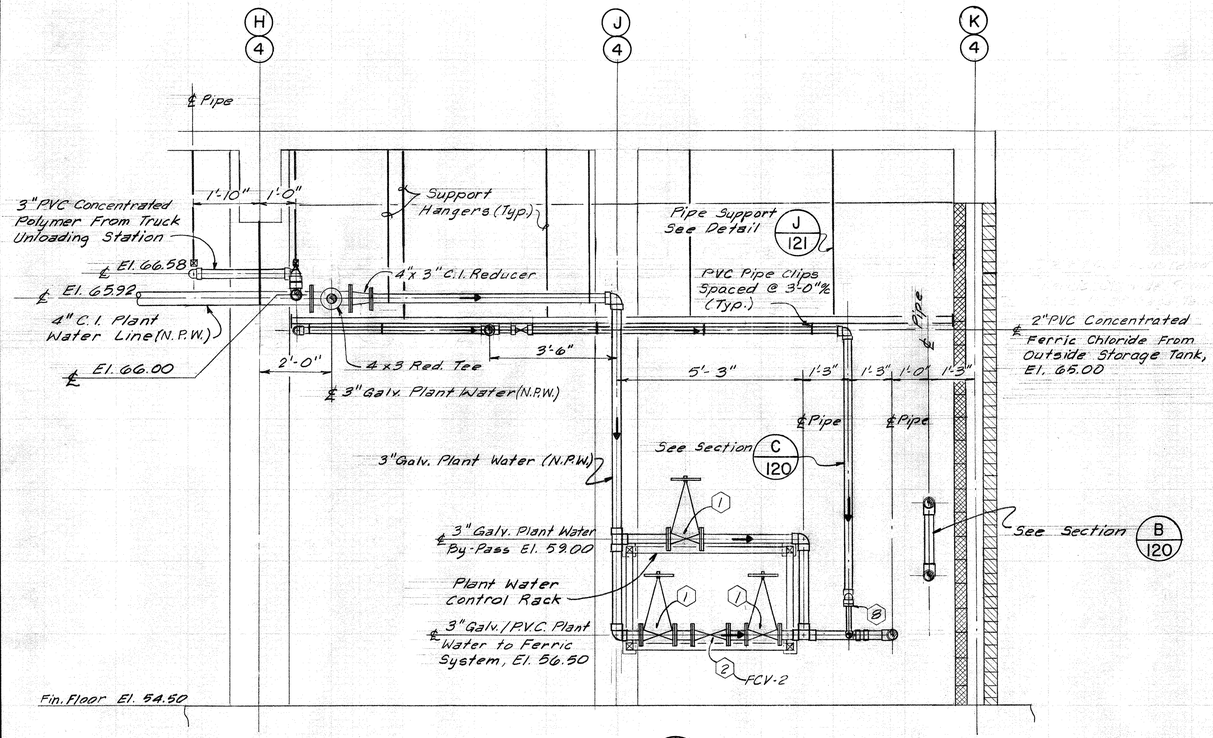

SECTION A 120

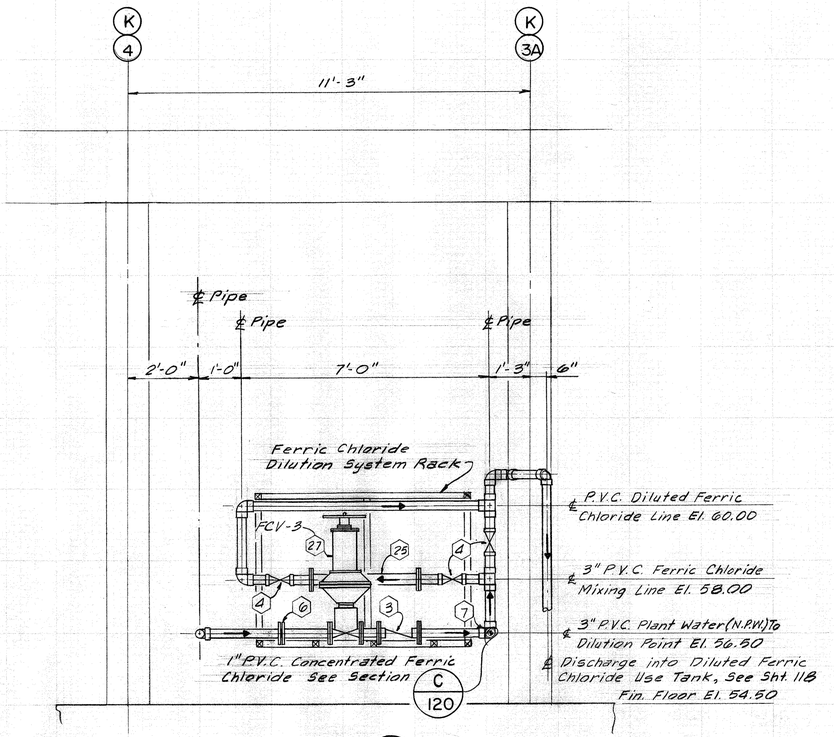

SECTION B 120

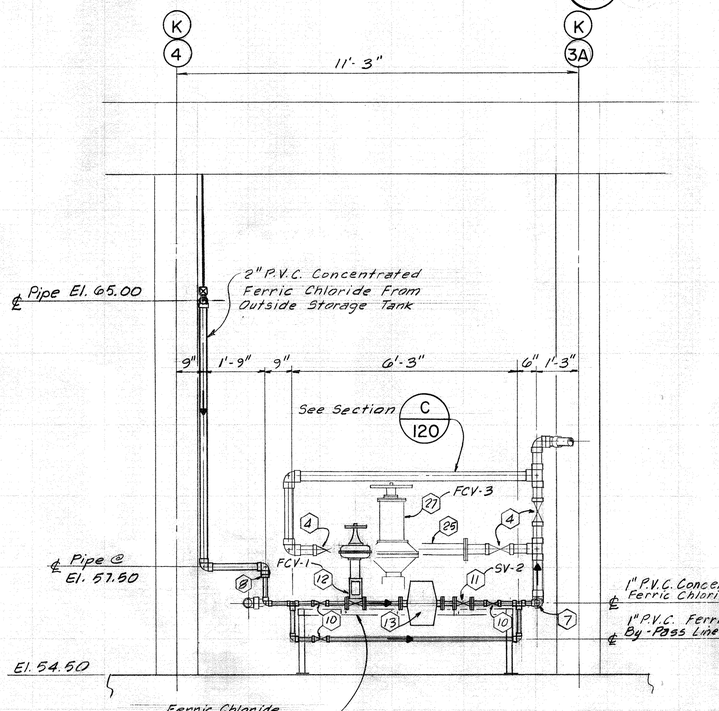

SECTION C 120

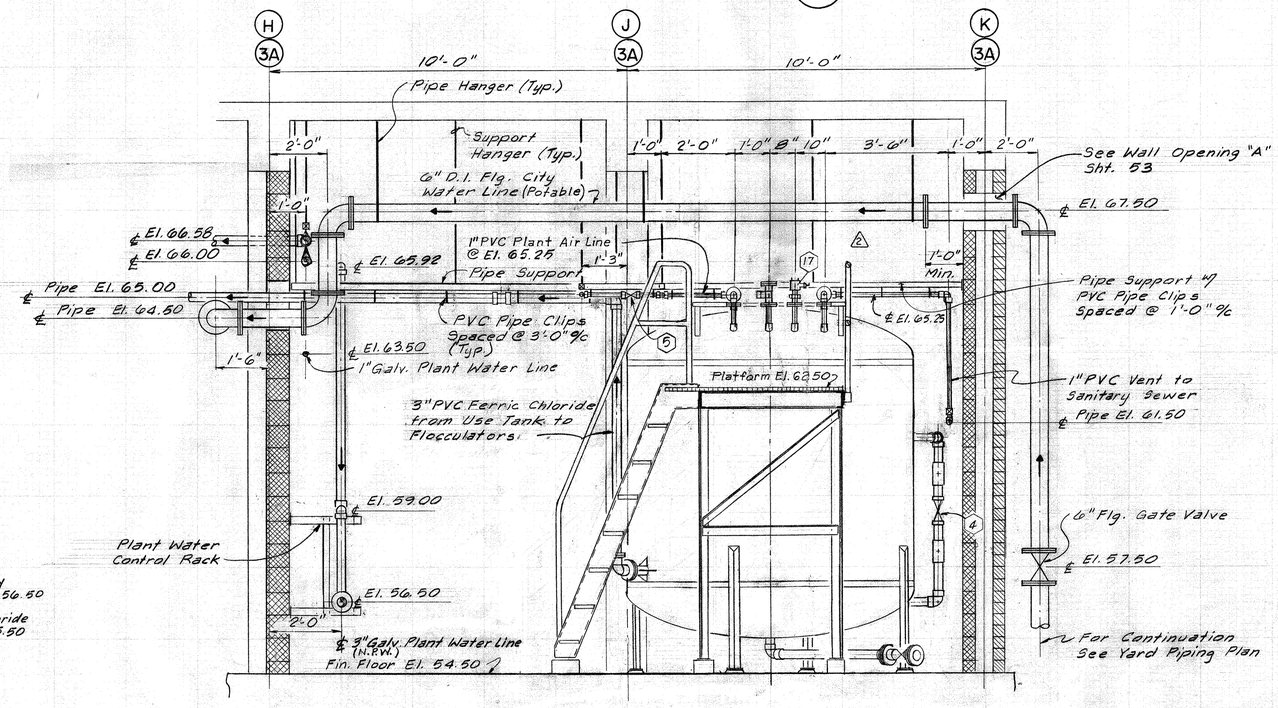

SECTION D 120

Rev. No.	Date	Description	Design	Checked
2	11-78	Construction Revision Rev. Piping & Platform	H.J.K.	K.R.L.
1	11-78	Permit Revisions	H.J.K.	K.R.L.

KENNETH R. LINDSEY 31158 REGISTERED PROFESSIONAL ENGINEER — STATE OF TEXAS

J.C. SUMAN 40987 REGISTERED PROFESSIONAL ENGINEER — STATE OF TEXAS

CITY OF HOUSTON
DEPARTMENT OF PUBLIC WORKS

ALMEDA-SIMS SLUDGE DISPOSAL PLANT - 1973

CHEMICAL ROOM SECTIONS

RECOMMENDED FOR APPROVAL:
Kenneth R. Lindsey
BINKLEY & HOLMES, INC., CONSULTING ENGINEERS

APPROVED:

CHIEF ENGINEER — ASST. CHIEF ENGINEER

ASST. DIRECTORS OF PUBLIC WORKS

DIRECTOR OF PUBLIC WORKS

DESIGNED BY: D.C.
DRAWN BY: B.J.L.
CHECKED BY: S.R.S.
SCALE: 1/2" = 1'-0"
DATE: Mar. 1977
SHEET 120 OF 200 SHEETS
DRAWING NO. 18045

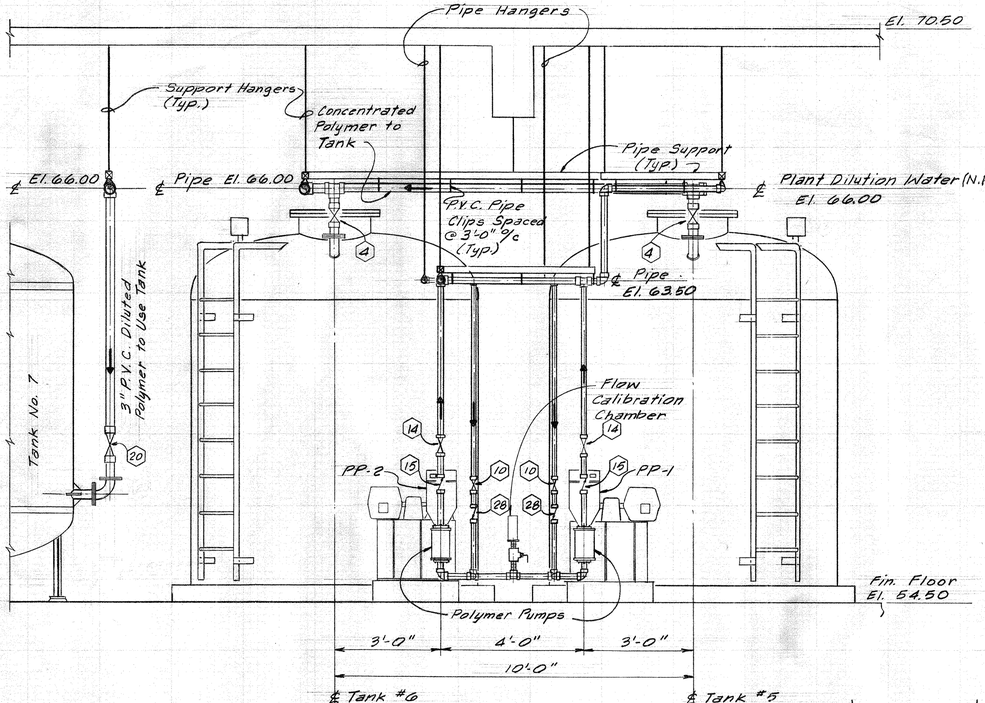

SECTION A
Scale: 1/2"=1'-0" 121

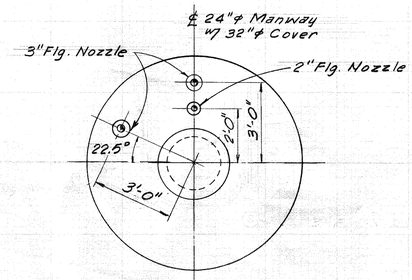

TANK NO. 5 DETAIL B
Scale: 3/8"=1'-0" 121

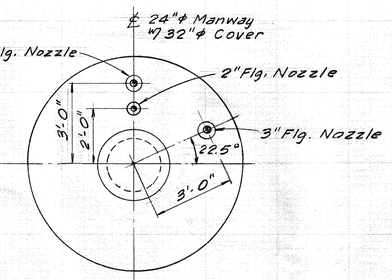

TANK NO. 6 DETAIL C
Scale: 3/8"=1'-0" 121

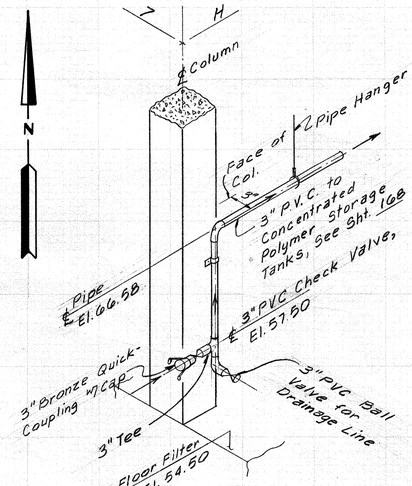

CONCENTRATED POLYMER TRUCK UNLOADING STATION DETAIL F
N.T.S. 121

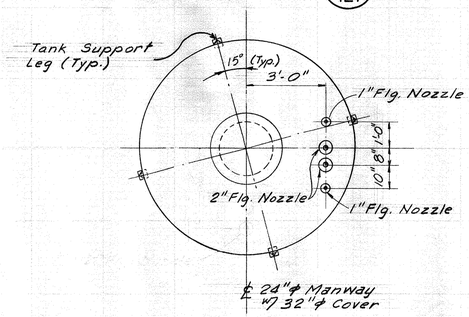

TANK NO. 7 DETAIL D
Scale: 3/8"=1'-0" 121

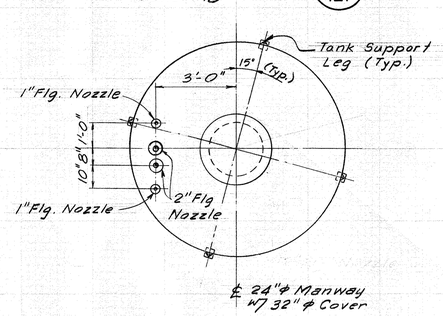

TANK NO. 8 DETAIL E
Scale: 3/8"=1'-0" 121

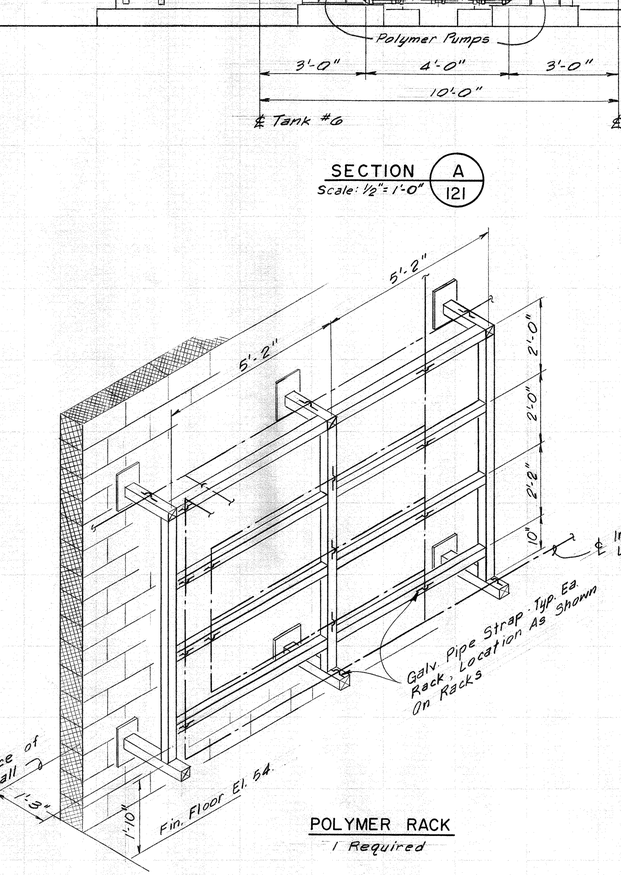

POLYMER RACK
1 Required

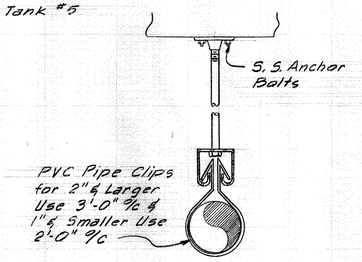

TYPICAL PIPE HANGER DETAIL J
N.T.S. 121

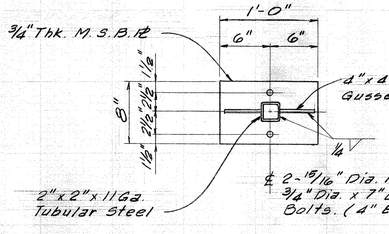

DETAIL G
N.T.S.
(2 - Req'd) 121

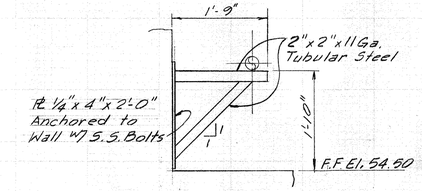

PIPE SUPPORT DETAIL K
N.T.S. 121

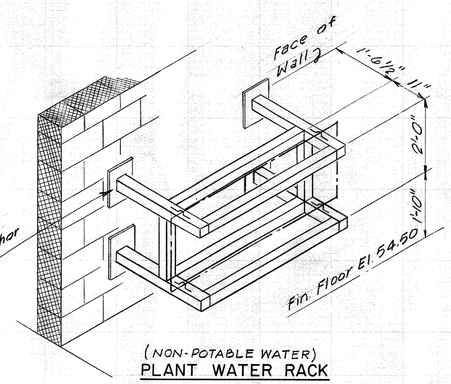

(NON-POTABLE WATER)
PLANT WATER RACK
2 Required

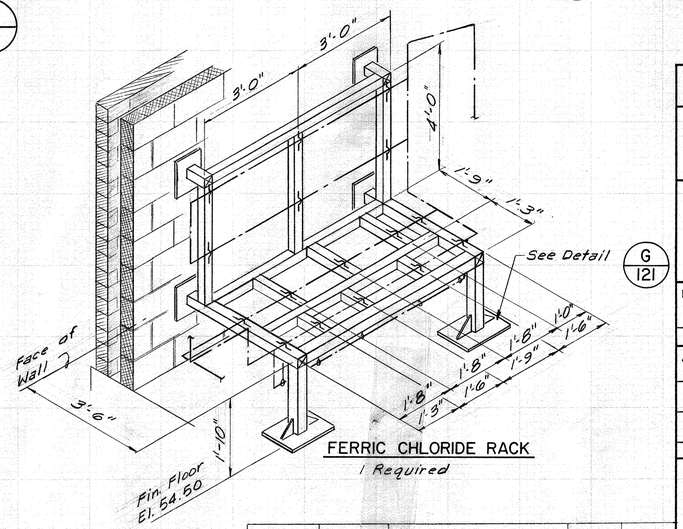

FERRIC CHLORIDE RACK
1 Required

DILUTION SYSTEM RACK DETAIL H
N.T.S. 121

Notes For Dilution Racks:

1. All Tubular Structure of Each Rack Shall Be 2"x2"x 11Ga. Tubular Steel.
2. Dimensions For Racks Shall Be Verified W/ Equipment, Valves And Piping Before Fabrication.

STATE OF TEXAS — KENNETH R. LINDSEY — 31158 — REGISTERED PROFESSIONAL ENGINEER

STATE OF TEXAS — J. C. SUMAN — 40887 — REGISTERED PROFESSIONAL ENGINEER

CITY OF HOUSTON
DEPARTMENT OF PUBLIC WORKS

ALMEDA-SIMS SLUDGE DISPOSAL PLANT-1973

CHEMICAL ROOM SECTIONS AND DETAILS

RECOMMENDED FOR APPROVAL:
Kenneth R. Lindsey
BINKLEY & HOLMES, INC., CONSULTING ENGINEERS

APPROVED:
CHIEF ENGINEER — ASST. CHIEF ENGINEER
ASST. DIRECTORS OF PUBLIC WORKS
DIRECTOR OF PUBLIC WORKS

DESIGNED BY: D.C.
DRAWN BY: B.J.L.
CHECKED BY: S.R.S.
SCALE: AS NOTED
DATE: Mar., 1977
SHEET 121 OF 200 SHEETS
DRAWING NO. 18045

Rev. No.	Date	Description	Design	Checked
1	11-78	Permit Revisions	H.J.K.	K.R.L.

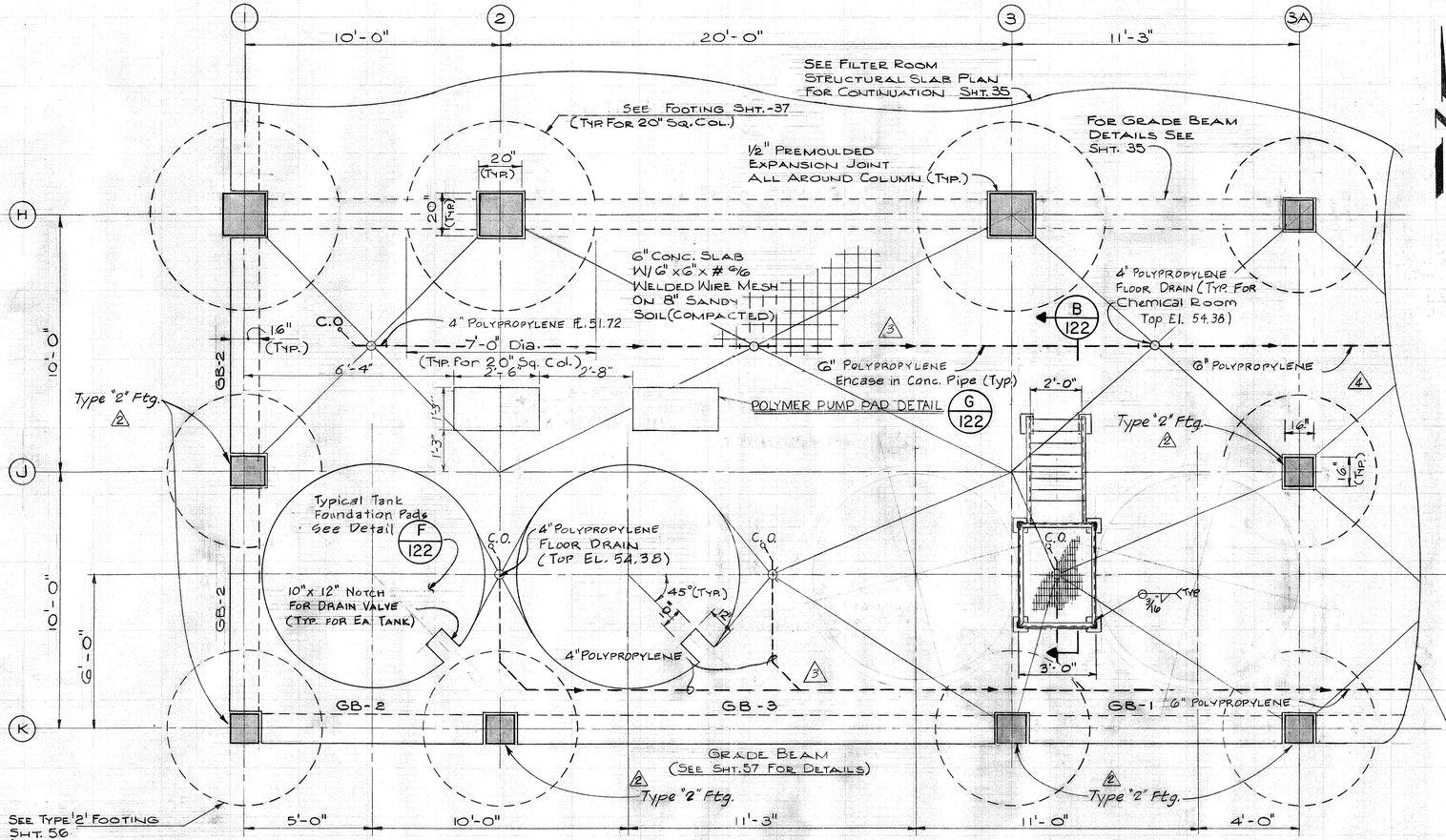

FOUNDATION & FLOOR SLAB PLAN @ EL. 54.50 — A 122

Scale: 3/8" = 1'-0"

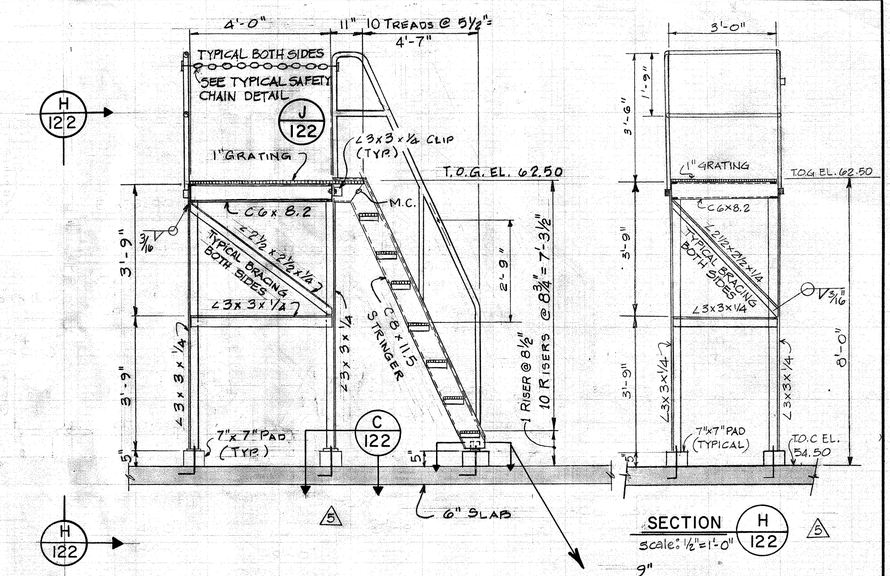

SECTION — H 122 — Scale: 1/2" = 1'-0" — 5

SECTION — B 122 — Scale: None

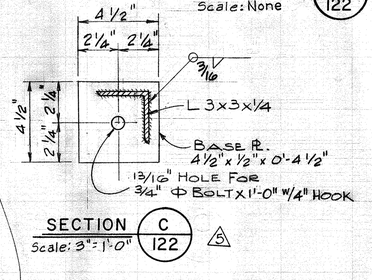

SECTION — C 122 — Scale: 3" = 1'-0" — 5

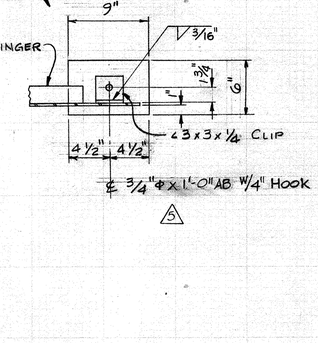

5

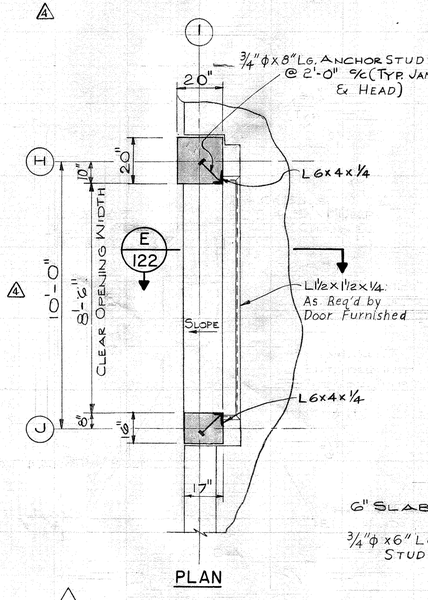

ROLLING DOOR DETAIL — D 122 — Scale: 3/8" = 1'-0"

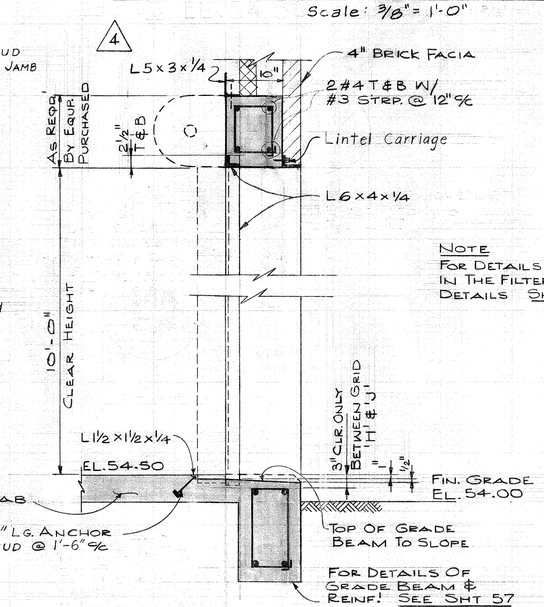

SECTION — E 122 — Scale: 3/4" = 1'-0"

NOTE
For Details Of Door @ El. 70.50 In The Filter Room See Framing Details Sht. 48

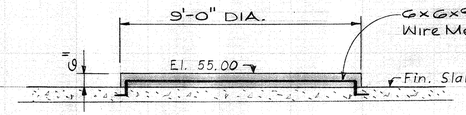

TYPICAL DETAIL OF FOUNDATION PAD FOR TANKS — F 122 — Scale: 3/8" = 1'-0"

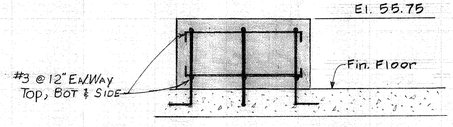

POLYMER PUMP PAD DETAIL — G 122 — 2 REQ. D — Scale 3/4" = 1'-0"

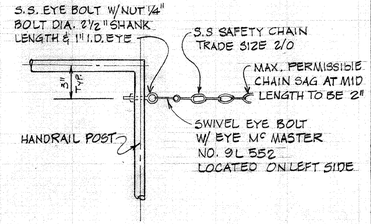

TYPICAL SAFETY CHAIN DETAIL — J 122 — Scale: None. 5

5	2-79	Construction Revision Changed Tank Platform & Stair	J.L.R	H.J.K.
4	11-78	Construction Rivision Changed Rolling Door Details	J.L.K	H.J.K.
3	10-78	Permit Revision	H.J.K.	K.R.L.
2	6-78	Foundation Revisions.	H.J.K.	K.R.L.
1	6-77	General Rev.	J.C.S.	K.R.L.
REV. NO.	DATE	DESCRIPTION	DESIGN	CHECKED

STATE OF TEXAS — KENNETH R. LINDSEY — 31158 — REGISTERED PROFESSIONAL ENGINEER

STATE OF TEXAS — J.C. SUMAN — 40882 — REGISTERED PROFESSIONAL ENGINEER

CITY OF HOUSTON
DEPARTMENT OF PUBLIC WORKS

ALMEDA - SIMS SLUDGE DISPOSAL PLANT — 1973

CHEMICAL ROOM STRUCTURAL FLOOR SLAB - PLAN AND DETAILS

RECOMMENDED FOR APPROVAL:
BINKLEY & HOLMES, INC., CONSULTING ENGINEERS

APPROVED:
CHIEF ENGINEER — ASST. CHIEF ENGINEER
ASST. DIRECTORS OF PUBLIC WORKS
DIRECTOR OF PUBLIC WORKS

DESIGNED BY: J.C. SUMAN
DRAWN BY: JAG AMIN
CHECKED BY: S.R.S.
SCALE: AS SHOWN
DATE: Mar. , 1977
SHEET 122 OF 200 SHEETS
DRAWING NO. 18045

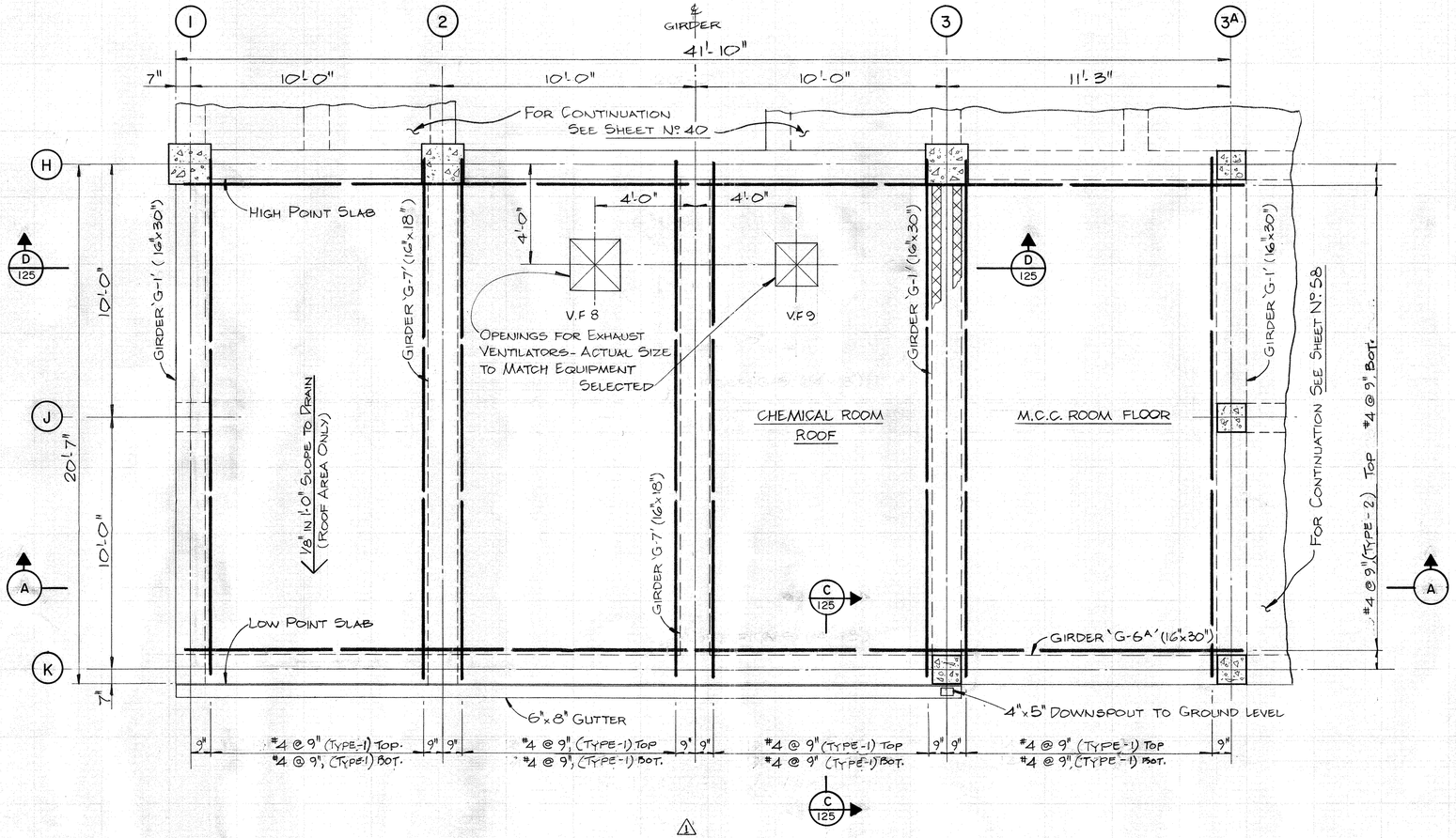

⚠1

PLAN AT ELEV. 70.50

SCALE 3/8" = 1'-0"

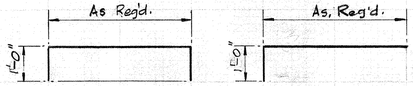

BENT BAR DETAILS

REINFORCING STEEL SCHEDULE FOR SLAB

MARK	TYPE	SIZE	No. REQ'D	LENGTH PER BAR	BENT BAR DIM. A	BENT BAR DIM. B
S-1	1	#4	53	22'-11"	20'-11"	1'-0"
S-2	STR.	#4	53	20'-8"		
S-13	2	#4	26	37'-11"	36'-11"	1'-0"
S-14	STR.	#4	26	42'-1"		

⚠

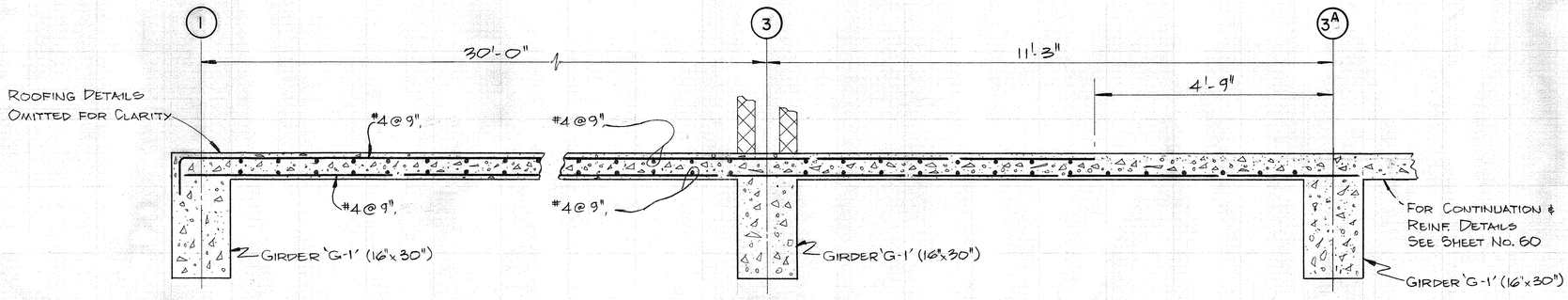

⚠1

SECTION (A)

SCALE 3/4"=1'-0"

⚠	11.78	Construction Revision	J.L.R	H.J.K.
Rev. NO.	DATE	DESCRIPTION	DESIGN	CHECK

STATE OF TEXAS — KENNETH R. LINDSEY — 31158 — REGISTERED PROFESSIONAL ENGINEER

STATE OF TEXAS — J.C. SUMAN — 40827 — REGISTERED PROFESSIONAL ENGINEER

CITY OF HOUSTON
DEPARTMENT OF PUBLIC WORKS

ALMEDA SIMS
SLUDGE DISPOSAL
PLANT— 1973

CHEMICAL ROOM ROOF & MOTOR CONTROL CENTER FLOOR PLAN & SECTION

RECOMMENDED FOR APPROVAL:
Kenneth Lindsey
BINKLEY & HOLMES, INC., CONSULTING ENGINEERS

APPROVED:

CHIEF ENGINEER — ASST. CHIEF ENGINEER

ASST. DIRECTORS OF PUBLIC WORKS

DIRECTOR OF PUBLIC WORKS

DESIGNED BY: J.C.SUMAN
DRAWN BY: L.V.C.
CHECKED BY: S.R.S.
SCALE: AS SHOWN
DATE: MARCH 1977
SHEET 123 OF 200 SHEETS
DRAWING NO. 18045

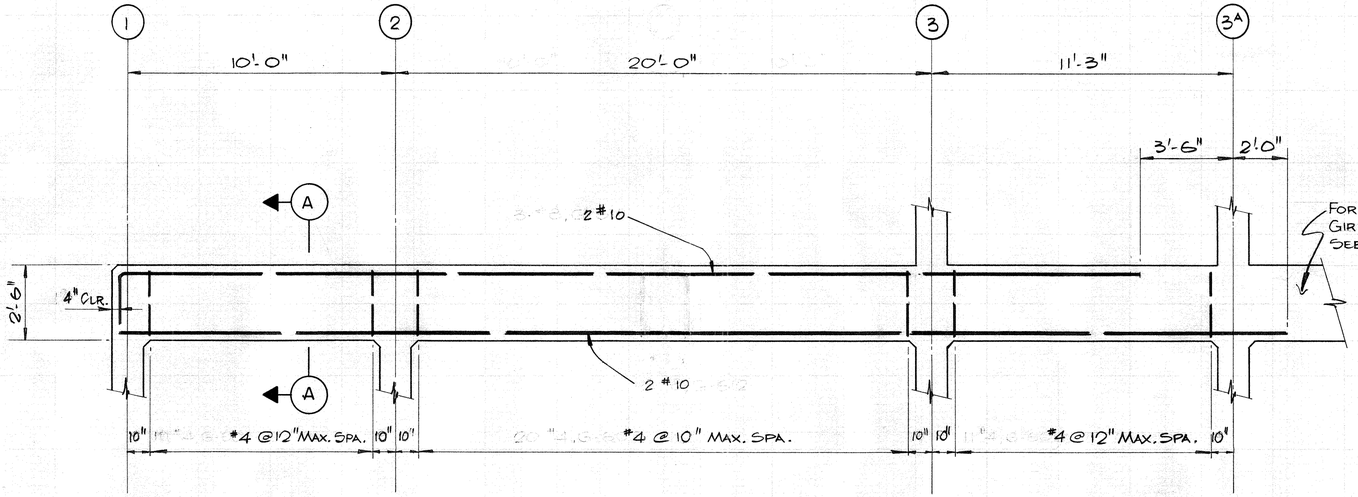

⚠ ELEVATION GIRDER G-6A
SCALE 3/8" = 1'-0"

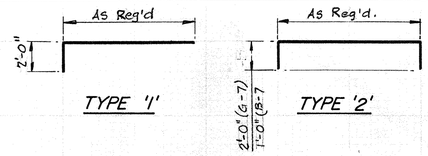

⚠ BENT BAR DETAILS
NO SCALE

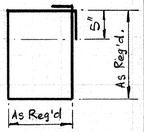

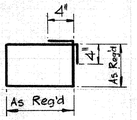

⚠

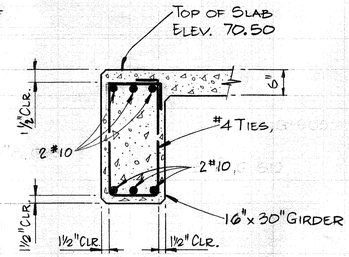

⚠ SECTION (A)
SCALE 3/4" = 1'-0"

REINFORCING STEEL SCHEDULE FOR BEAMS, GIRDERS & COLS.

MARK	TYPE	SIZE	No. REQ'D	LENGTH PER BAR	BENT BAR DIM. A	BENT BAR DIM. B
			GIRDER G-6A			
G-605	3	#4	41	6'-11"	2'-1½"	0'-11"
G-611	1	#8	3	40'-2"	38'-2"	2'-0"
G-612	STR.	#8	3	43'-8"		
			GIRDER G-7			
G-701	2	#8	4	24'-11"	20'-11"	2'-0"
G-702	STR.	#8	4	20'-11"		
G-703	3	#3	40	6'-11"	2'-1½"	0'-11"
			BEAM B-7			
B-701	2	#7	2	23'-2"	21'-2"	1'-0"
B-702	STR.	#7	2	21'-2"		
B-703	3	#3	20	4'-11"	1'-1½"	0'-11"
			COL. J-1			
CH-1	STR.	#11	8	17'-10"		
CH-2	4	#3	16	4'-6"	0'-10"	1'-1"

⚠

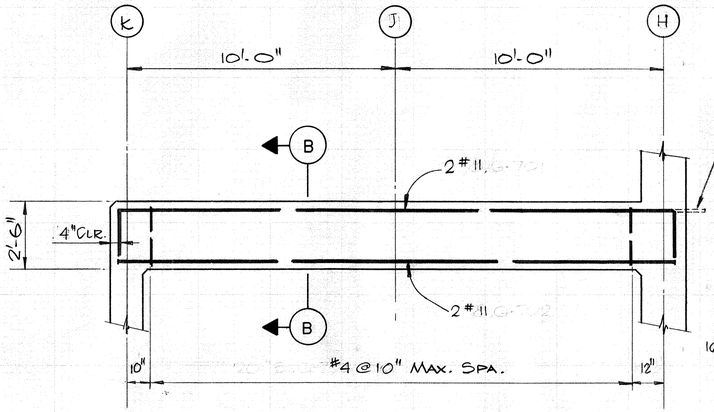

⚠ ELEVATION GIRDER G-7
(2 REQ'D)
SCALE 3/8" = 1'-0"

Extend Bars into Adjoining beem1/4 L For Col. Lines 2+3. Bend Bars as Shown For Girder Location between Col. Lines 2+3

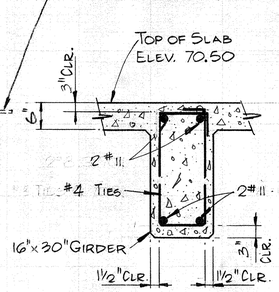

⚠ SECTION (B)
SCALE 3/4" = 1'-0"

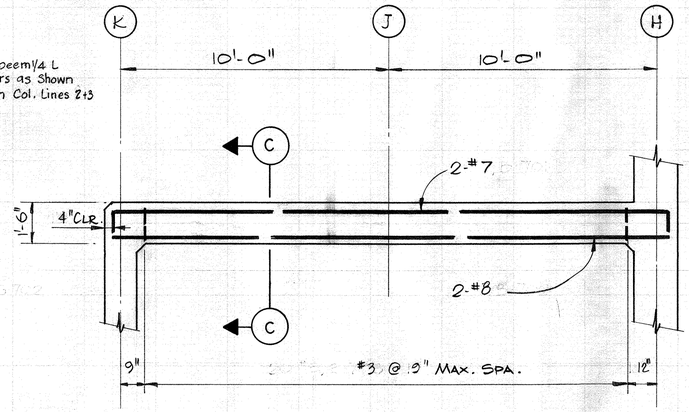

⚠ ELEVATION BEAM B-7
SCALE 3/8" = 1'-0"

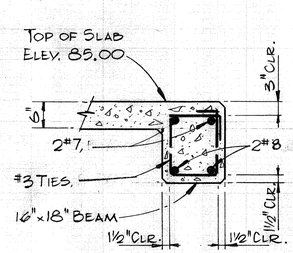

⚠ SECTION (C)
SCALE 3/4" = 1'-0"

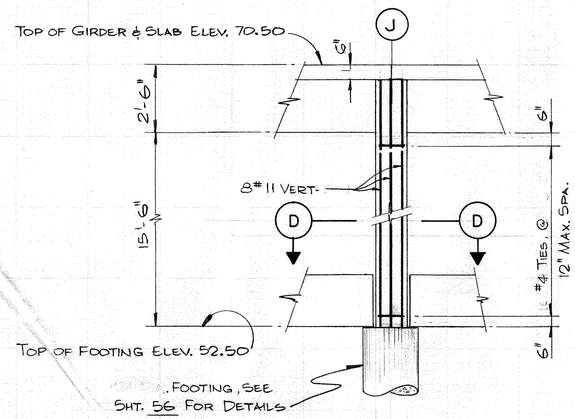

⚠ COLUMN J-1
SCALE 3/8" = 1'-0"

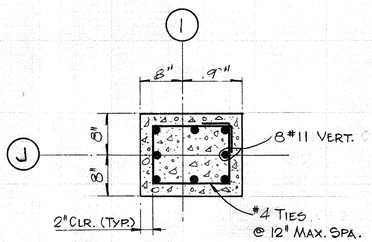

⚠ SECTION (D)
SCALE 1" = 1'-0"

KENNETH R. LINDSEY
51158
REGISTERED PROFESSIONAL ENGINEER

J.C. SUMAN
47987
REGISTERED PROFESSIONAL ENGINEER

CITY OF HOUSTON
DEPARTMENT OF PUBLIC WORKS

ALMEDA SIMS
SLUDGE DISPOSAL
PLANT—1973

CHEMICAL ROOM & CONSTANT HEAD TANK —— BEAM, GIRDER, & COLUMN DETAILS

RECOMMENDED FOR APPROVAL:
Kenneth R. Lindsey
BINKLEY & HOLMES, INC., CONSULTING ENGINEERS

APPROVED:

CHIEF ENGINEER — ASST. CHIEF ENGINEER

ASST. DIRECTORS OF PUBLIC WORKS

DIRECTOR OF PUBLIC WORKS

DESIGNED BY: J.C. SUMAN
DRAWN BY: L.V.C.
CHECKED BY: S.R.S.
SCALE: AS SHOWN
DATE: MARCH 1977
SHEET 124 OF 200 SHEETS
DRAWING NO. 18015

Rev. NO.	DATE	DRESCRIPTION	DESIGN	CHECK
⚠	11.78	Construction Revision	J.L.R.	H.J.K.

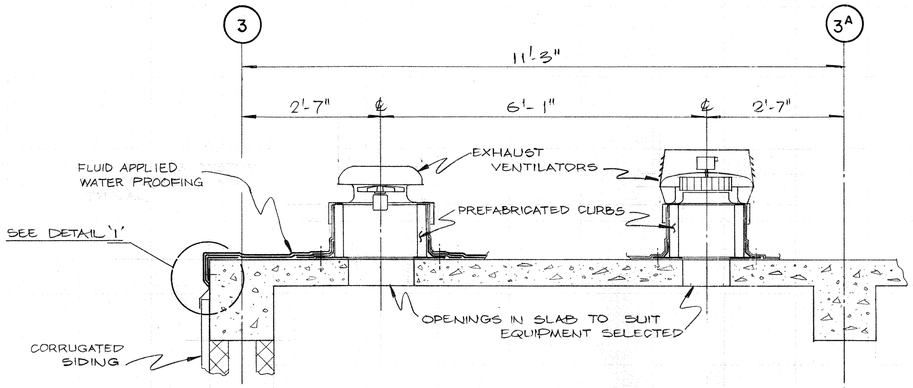

SECTION (A/125)
SCALE 3/4" = 1'-0"

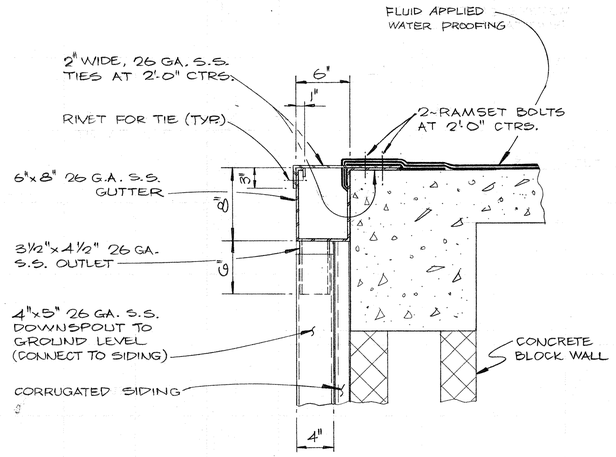

SECTION (B/125)
SCALE 1½" = 1'-0"

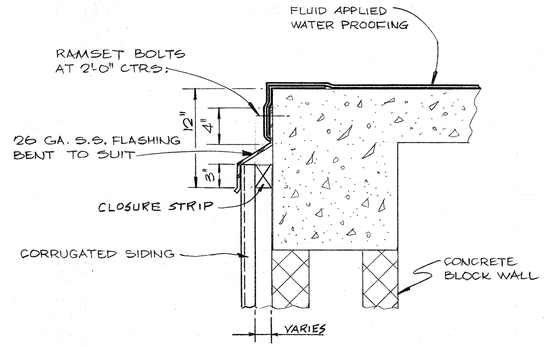

DETAIL '1' (2)
SCALE 1½" = 1'-0"

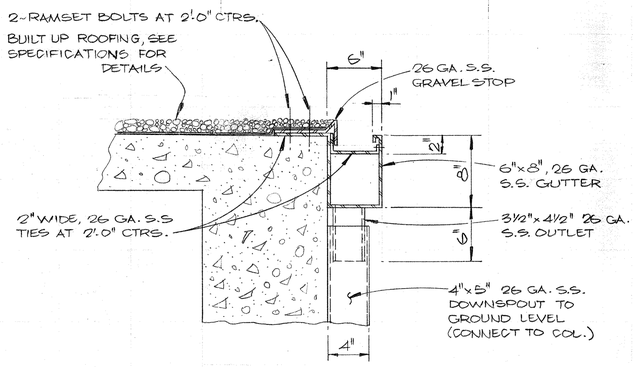

SECTION (C/125)
SCALE 1½" = 1'-0"

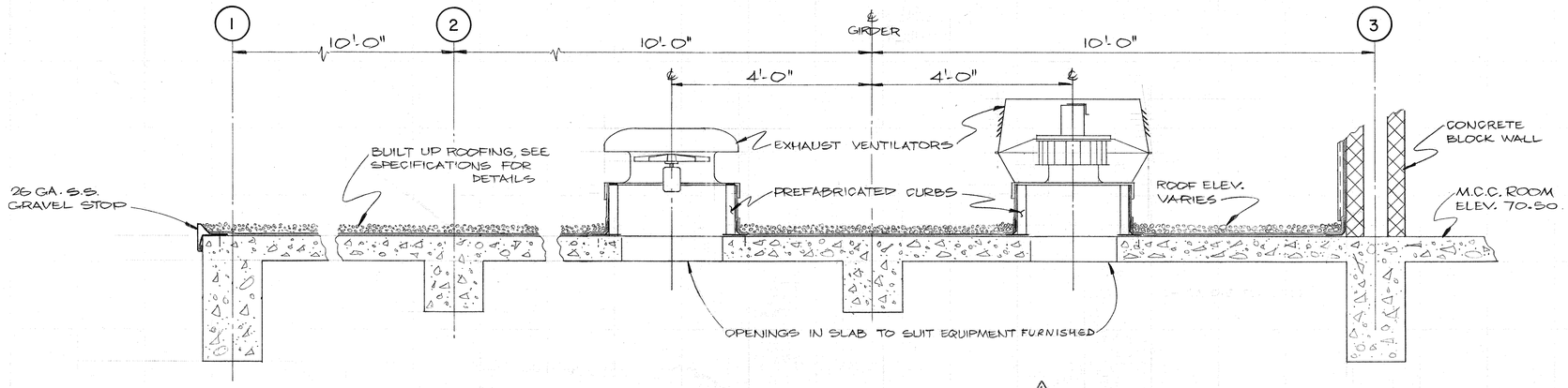

SECTION (D/125)
SCALE 3/4" = 1'-0"

REV.NO	DATE	DESCRIPTION	DESING	CHECKED
2	12-78	CONSTRUCTION REVISIONS	HJK	KRL
1	6-77	GENERAL REVISION	J.C.S	K.R.L

KENNETH R. LINDSEY 31158 REGISTERED PROFESSIONAL ENGINEER

J. C. SUMAN 40692 REGISTERED PROFESSIONAL ENGINEER

CITY OF HOUSTON
DEPARTMENT OF PUBLIC WORKS

ALMEDA SIMS SLUDGE DISPOSAL PLANT — 1973

CHEMICAL ROOM & CONSTANT HEAD TANK MISCELLANEOUS DETAILS

RECOMMENDED FOR APPROVAL:
Kenneth R. Lindsey
BINKLEY & HOLMES, INC., CONSULTING ENGINEERS

APPROVED:

CHIEF ENGINEER — ASST. CHIEF ENGINEER

ASST. DIRECTORS OF PUBLIC WORKS

DIRECTOR OF PUBLIC WORKS

DESIGNED BY: L.V.C. & J.C.S.
DRAWN BY: L.V.C.
CHECKED BY: S.R.S.
SCALE: AS SHOWN
DATE: MARCH 1977
SHEET 125 OF 200 SHEETS
DRAWING NO. 18045

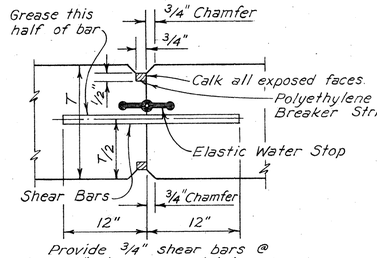

Provide 3/4" shear bars @ 18" ctrs. across joint.

WALLS

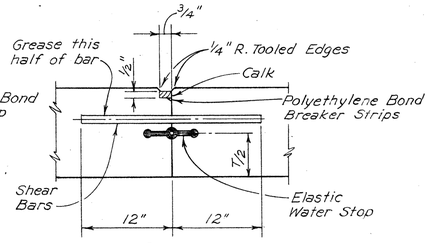

Provide 3/4" shear bars @ 18" ctrs. across joint.

SLABS

CONTRACTION JOINTS

No Scale

Type A - With Elastic Water Stop
Type B - Without Elastic Water Stop

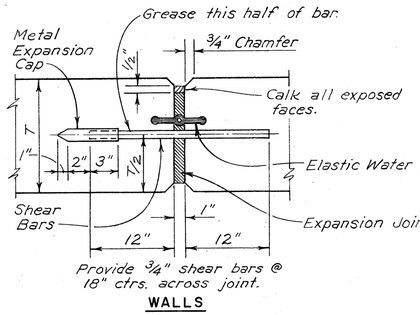

Provide 3/4" shear bars @ 18" ctrs. across joint.

WALLS

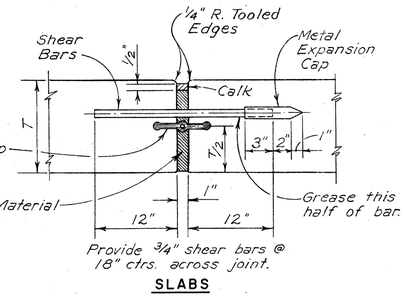

Provide 3/4" shear bars @ 18" ctrs. across joint.

SLABS

EXPANSION JOINTS

No Scale

Type C - With Elastic Water Stop.
Type D - Without Elastic Water Stop.

NOTES: 1. Reinforcing shall not be extended across joint.
2. Shear bars shall be smooth and free from rust or scale.

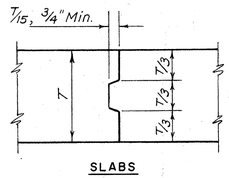

SLABS

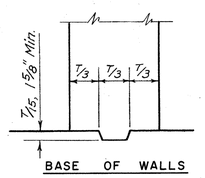

BASE OF WALLS

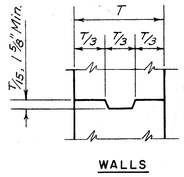

WALLS

JOINTS WITHOUT WATER STOPS

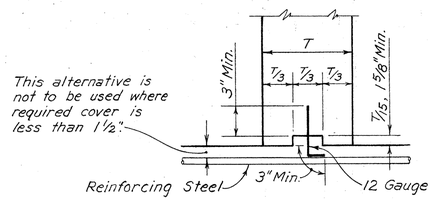

Alternative T ≧ 12"

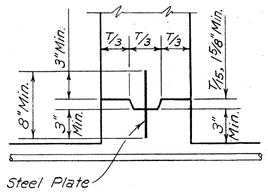

Alternative T ≧ 12"

BASE OF WALLS

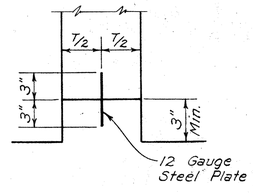

T < 12"

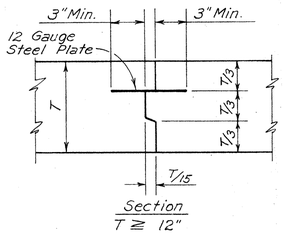

Section T ≧ 12"

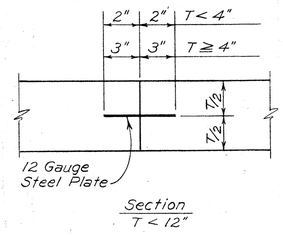

Section T < 12"

SLABS

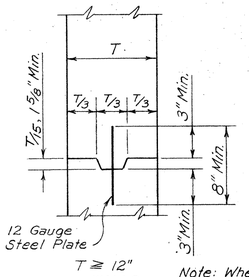

T ≧ 12"

WALLS

Note: Where T is less than 12", omit keys.

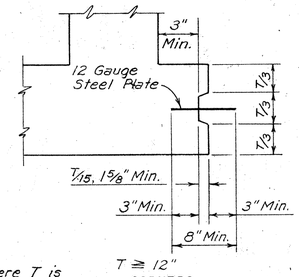

T ≧ 12"

CORNERS

WATERTIGHT JOINTS

TYPICAL CONSTRUCTION JOINTS

NOTE: Reinforcing steel is to be carried across all construction joints.

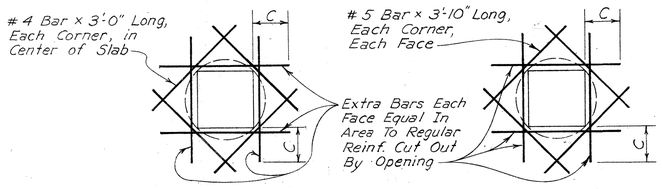

For Slabs 7" and Less In Thickness

For Slab Thicker Than 7"

SLABS

Note: These details apply to openings larger than 18" in Diam. or diagonal.

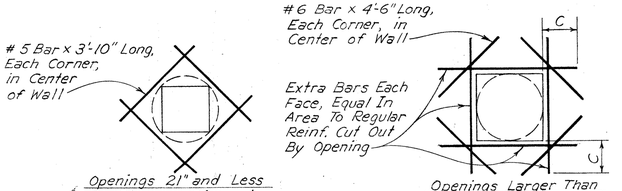

Openings 21" and Less In Diam. or Diagonal

Openings Larger Than 21" In Diam. or Diagonal

WALLS

TYPICAL EXTRA REINFORCING AT OPENINGS

C = The Required Length for Lapped Splice for Top Bars as Shown on This Sheet.

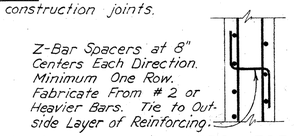

SPACERS FOR WALL REINFORCEMENT

BAR SIZE	LENGTH OF LAPPED SPLICES FOR REINFORCING IN INCHES			
	SPLICES NOT STAGGERED		WITH STAGGERED SPLICES	
	*TOP BARS	OTHERS	*TOP BARS	OTHERS
3	20	20	15	15
4	23	20	17	15
5	29	20	22	15
6	37	26	28	20
7	50	36	38	27
8	66	47	50	35
9	83	60	62	45
10	106	76	80	57
11	130	93	98	70

* Top bars are horizontal bars so placed that more than 12" of concrete is cast in the member below the bar. Horizontal bars in walls are to be provided with laps as required for top bars.

Except as otherwise indicated on the plans, lengths for lapped splices shall be not less than (no minus tolerance) shown above.

Lapped splices shall not be made at points of max. stress as determined by the Engineer, and shall not be spaced closer than 6" on ctrs. Splices are staggered if not more than 1/2 are spliced in a lap splice length.

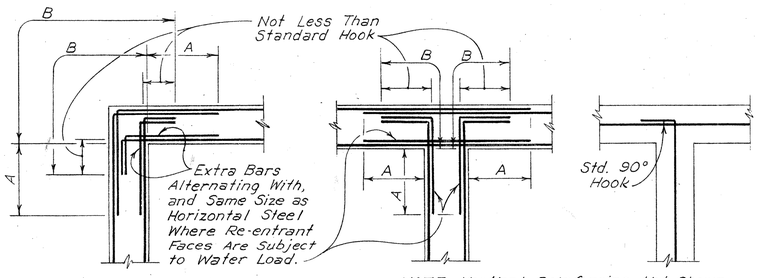

NOTE: Vertical Reinforcing Not Shown.

A = 1/5 the clear span distance measured horizontally or vertically, whichever is the smaller; but in no case less than the required length of lapped splices for top bars as shown on this sheet.

B = Sufficient length to permit bars to extend through the wall to the opposite face and terminate in a standard hook.

D = Not less than the length required for lapped splices for top bars, as shown on this sheet.

TYPICAL CORNER REINFORCING DETAILS

GENERAL NOTES:

Details on this sheet apply to the entire set of plans except where specifically shown otherwise.

CONCRETE COVER FOR REINFORCEMENT

LOCATION	MINIMUM COVER
Unformed Surfaces Adjacent to Excavation	3"
Unformed Surfaces Over Seal Slab	2"
Formed or Top Surfaces Exposed to Weather or Saturated Air, Submerged or in Contact with Earth:	
# 6 or Larger Bars	2"
# 5 or Smaller Bars	1 1/2"
Other Locations:	
Bars in Beams or Girders, Including Stirrups	1 1/2"
Column Spirals or Ties	1 1/2"
Other Bars:	
# 7 or Larger	Bar Diameter
# 6 or Smaller	3/4"

Cover for reinforcing steel shall not be less than the minimum given above (no minus tolerance), and shall not exceed the minimum by more than 1/4 inch where the concrete thickness is 24 inches or less, or more than 1/2 inch where the concrete thickness is more than 24 inches.

STATE OF TEXAS — KENNETH R. LINDSEY — 31158 — REGISTERED PROFESSIONAL ENGINEER

STATE OF TEXAS — J. C. SUMAN — 10987 — REGISTERED PROFESSIONAL ENGINEER

CITY OF HOUSTON
DEPARTMENT OF PUBLIC WORKS

ALMEDA SIMS SLUDGE DISPOSAL PLANT—1973

MISCELLANEOUS REINFORCED CONCRETE DETAILS

RECOMMENDED FOR APPROVAL:
Kenneth R. Lindsey
BINKLEY & HOLMES, INC., CONSULTING ENGINEERS

APPROVED:
CHIEF ENGINEER — ASST. CHIEF ENGINEER
ASST. DIRECTORS OF PUBLIC WORKS
DIRECTOR OF PUBLIC WORKS

DESIGNED BY: K.R.L.
DRAWN BY: A.S.
CHECKED BY: S.R.S.
SCALE: N.T.S.
DATE: MARCH 1977
SHEET 126 OF 200 SHEETS
DRAWING NO.

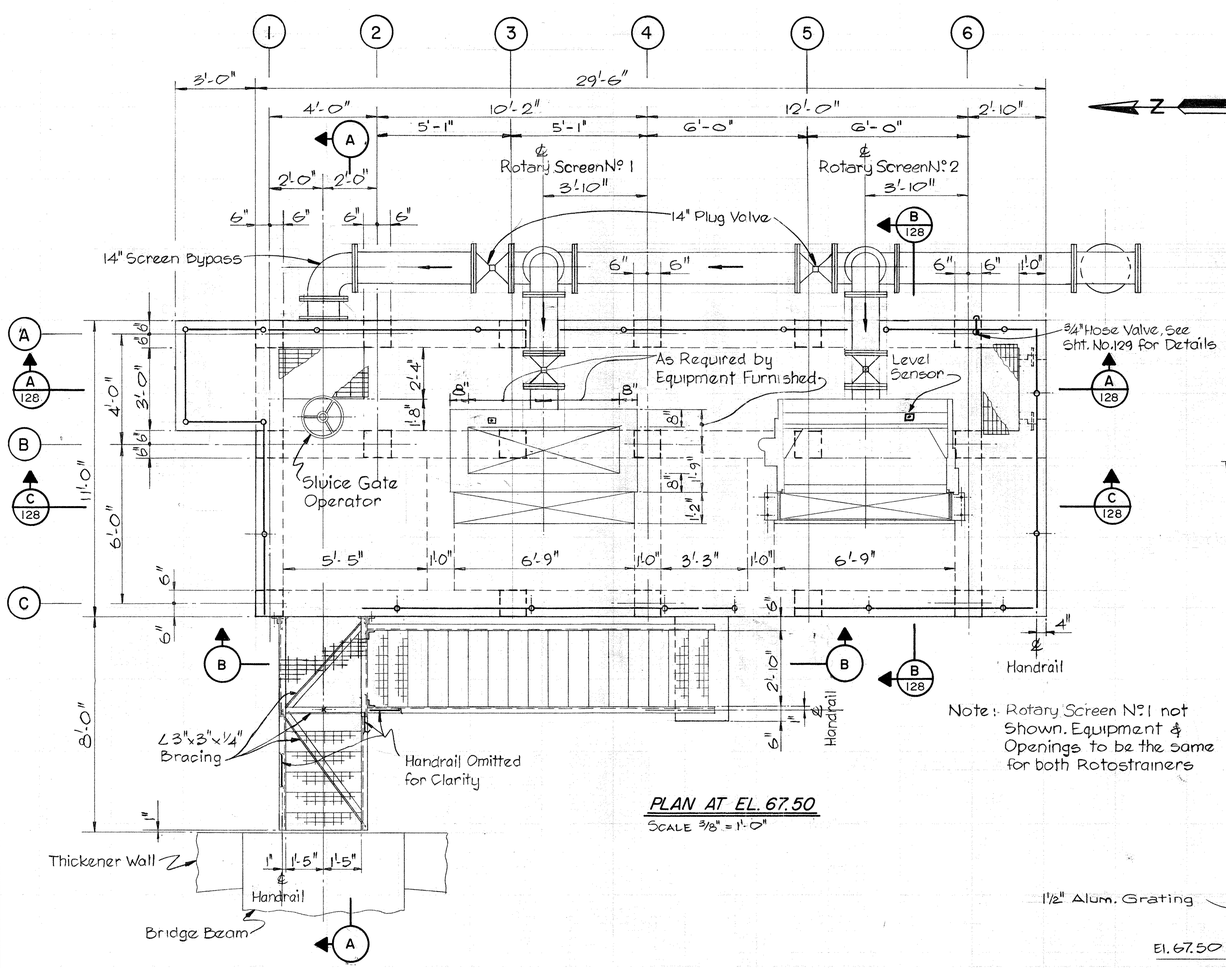

Note: Rotary Screen No. 1 not Shown. Equipment & Openings to be the same for both Rotostrainers

PLAN AT EL. 67.50

Scale 3/8" = 1'-0"

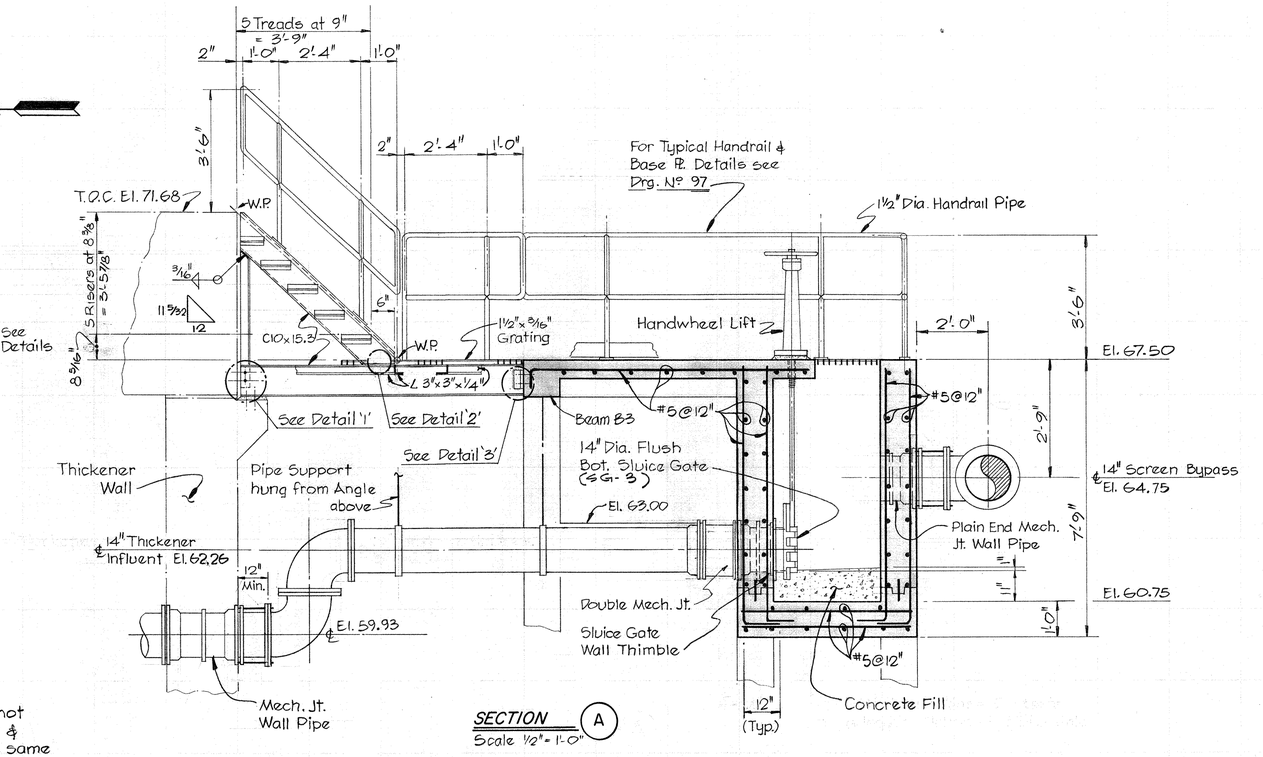

SECTION A

Scale 1/2" = 1'-0"

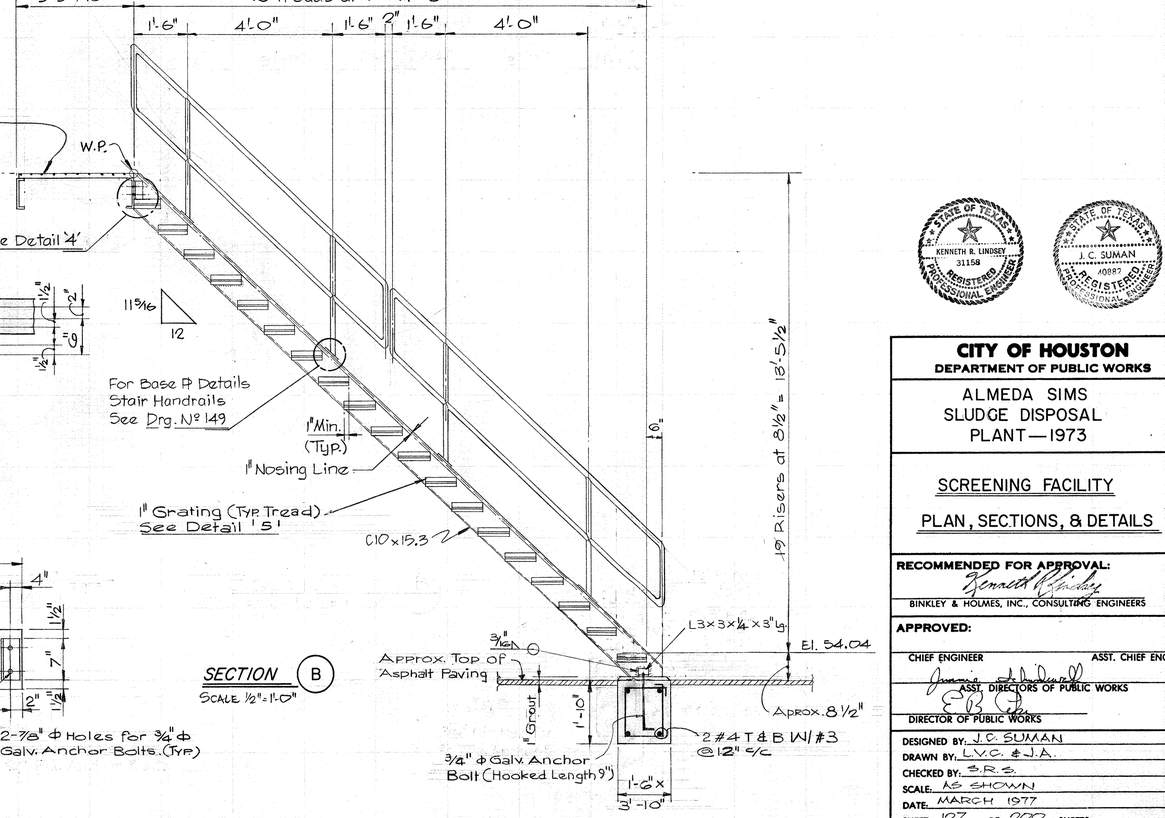

SECTION B

Scale 1/2" = 1'-0"

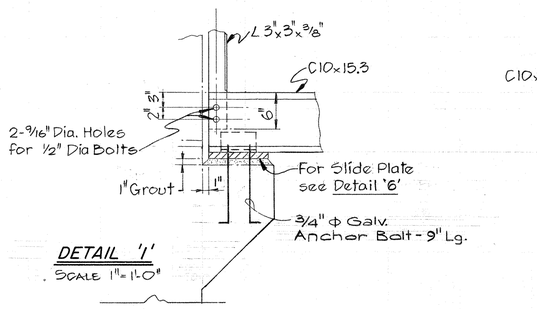

DETAIL '1'

Scale 1" = 1'-0"

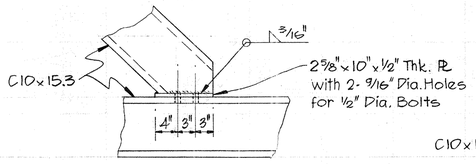

DETAIL '2'

Scale 1" = 1'-0"

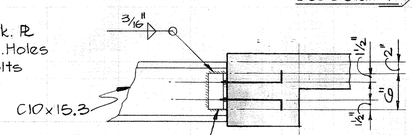

DETAIL '3'

Scale 1" = 1'-0"

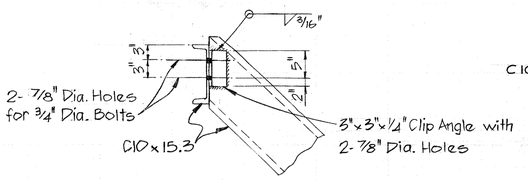

DETAIL '4'

Scale 1" = 1'-0"

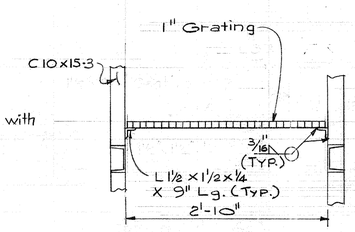

DETAIL '5'

Scale: 1" = 1'-0"

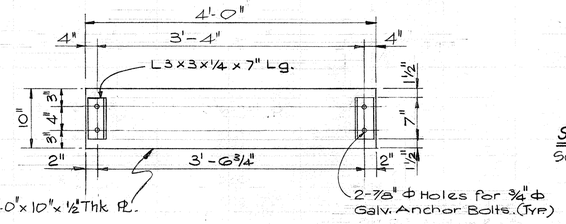

DETAIL '6'

Scale 1" = 1'-0"

STATE OF TEXAS
KENNETH R. LINDSEY
31158
REGISTERED PROFESSIONAL ENGINEER
STATE OF TEXAS
J. C. SUMAN
40887
REGISTERED PROFESSIONAL ENGINEER

CITY OF HOUSTON
DEPARTMENT OF PUBLIC WORKS

ALMEDA SIMS SLUDGE DISPOSAL PLANT—1973

SCREENING FACILITY

PLAN, SECTIONS, & DETAILS

RECOMMENDED FOR APPROVAL:
BINKLEY & HOLMES, INC., CONSULTING ENGINEERS

APPROVED:
CHIEF ENGINEER — ASST. CHIEF ENGINEER
ASST. DIRECTORS OF PUBLIC WORKS
DIRECTOR OF PUBLIC WORKS

DESIGNED BY: J. C. SUMAN
DRAWN BY: L.V.C. & J.A.
CHECKED BY: S.R.S.
SCALE: AS SHOWN
DATE: MARCH 1977
SHEET 127 OF 200 SHEETS
DRAWING NO. 18045

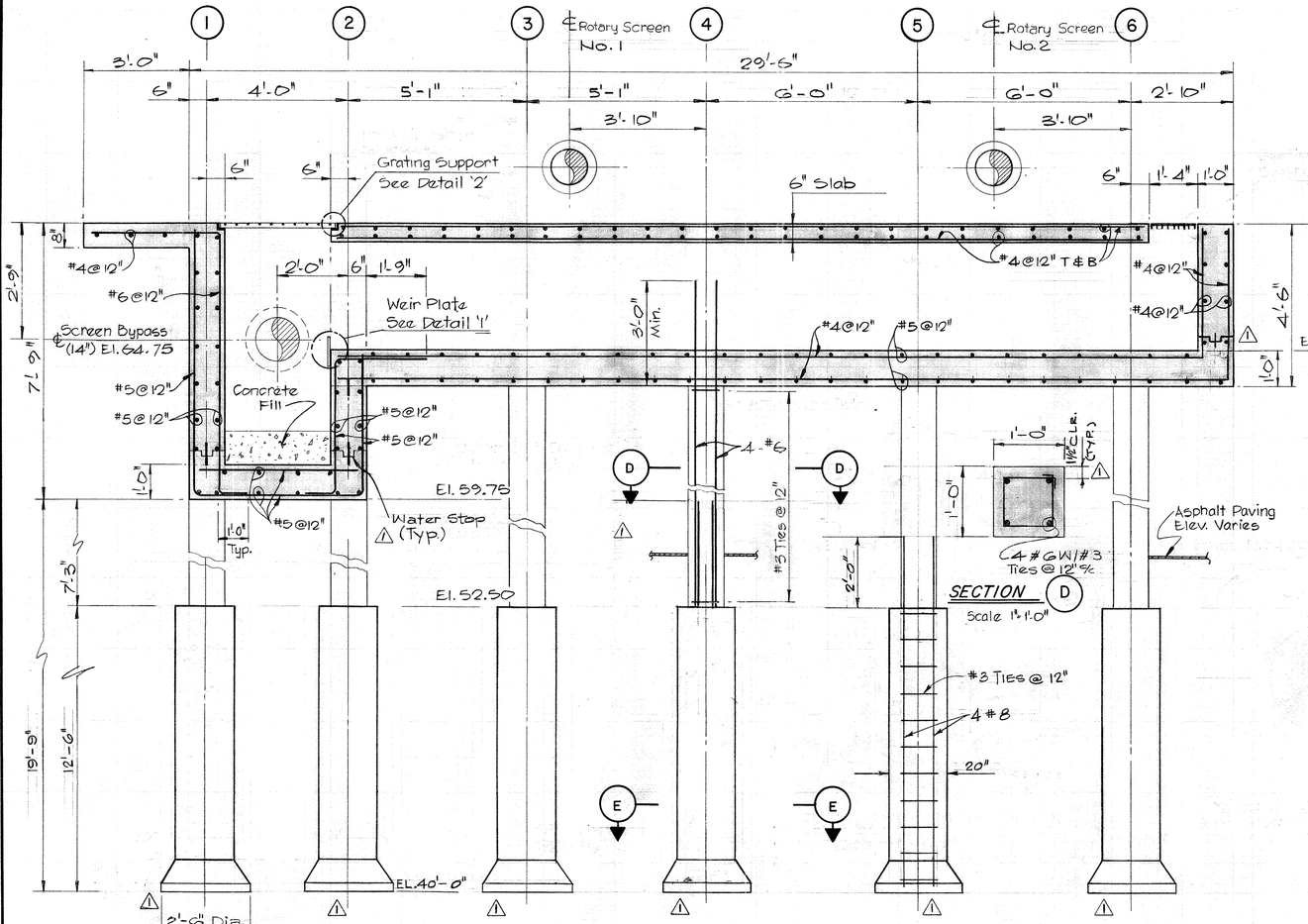

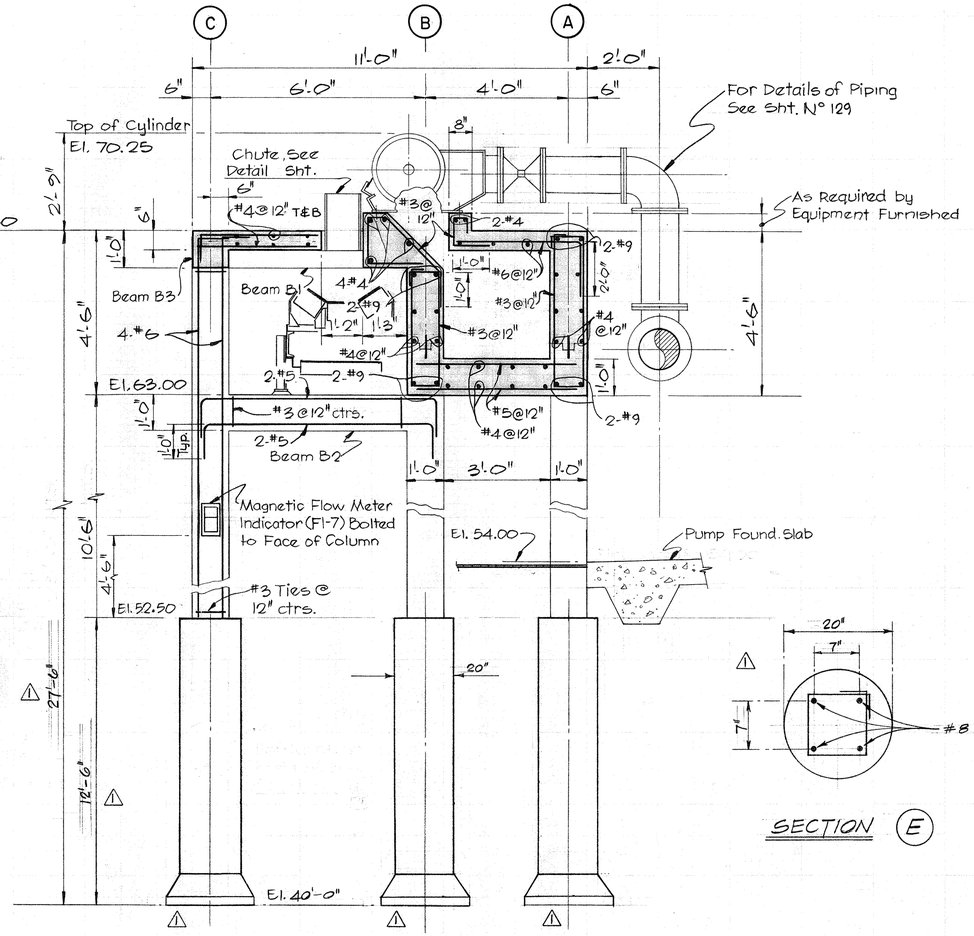

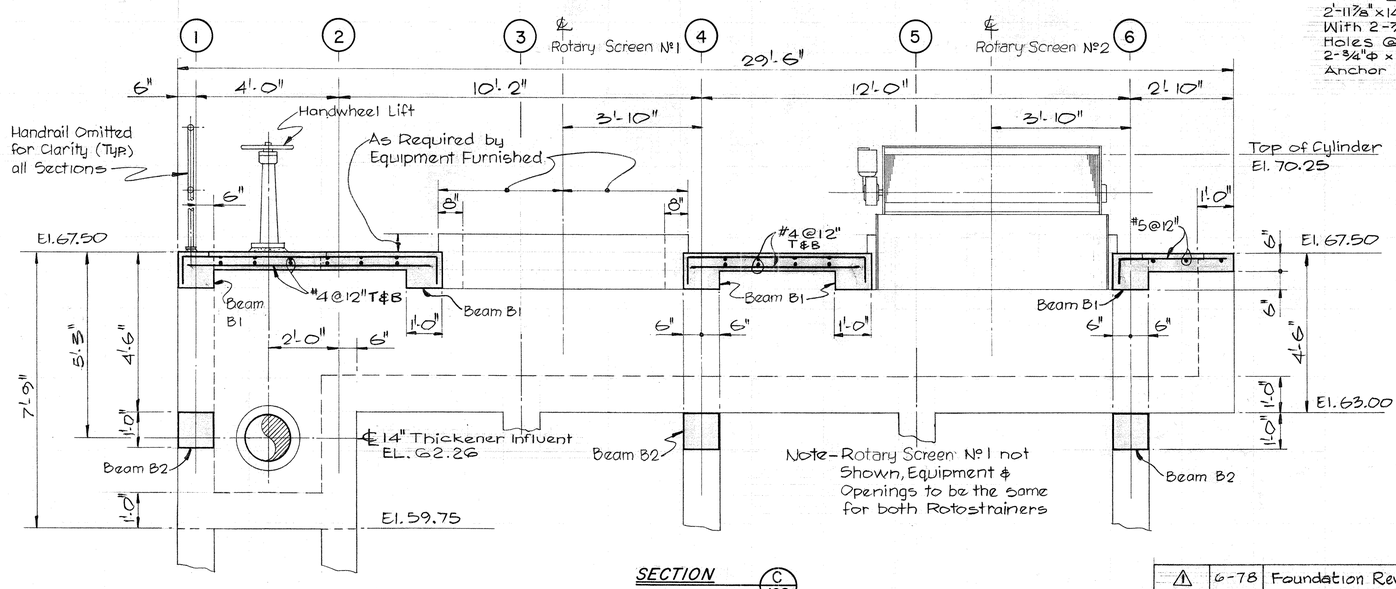

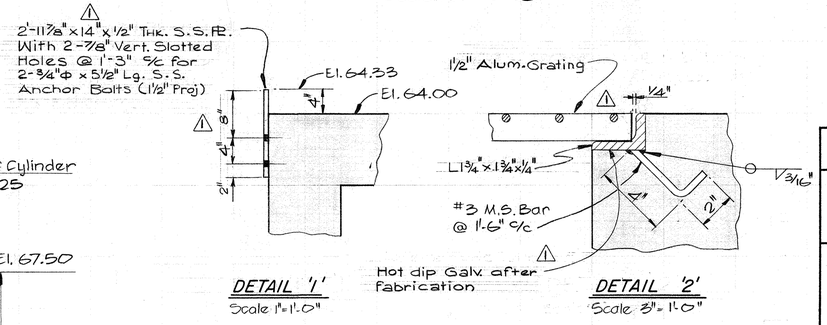

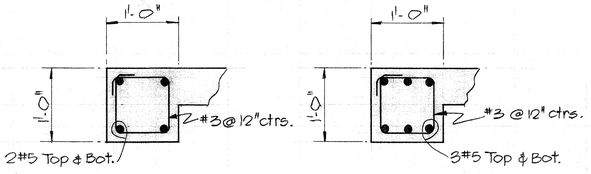

BEAM TYPES B1 & B2

BEAM TYPE B3

REV. NO.	DATE	DESCRIPTION	DESIGN	CHECKED
⚠	6-78	Foundation Revision	H.J.K.	K.R.L.

TYPICAL BEAM SECTIONS
Scale 1" = 1'-0"

KENNETH R. LINDSEY 31158 REGISTERED PROFESSIONAL ENGINEER — STATE OF TEXAS

J. C. SUMAN 40882 REGISTERED PROFESSIONAL ENGINEER — STATE OF TEXAS

CITY OF HOUSTON
DEPARTMENT OF PUBLIC WORKS

ALMEDA SIMS SLUDGE DISPOSAL PLANT— 1973

SCREENING FACILITY

SECTIONS & DETAILS

RECOMMENDED FOR APPROVAL:
Binkley & Holmes, Inc., Consulting Engineers

APPROVED:
CHIEF ENGINEER — ASST. CHIEF ENGINEER
ASST. DIRECTORS OF PUBLIC WORKS
DIRECTOR OF PUBLIC WORKS

DESIGNED BY: J.C. SUMAN
DRAWN BY: L.V.C. J.A
CHECKED BY: S.R.S.
SCALE: AS SHOWN
DATE: MARCH 1977
SHEET 128 OF 200 SHEETS
DRAWING NO. 18045

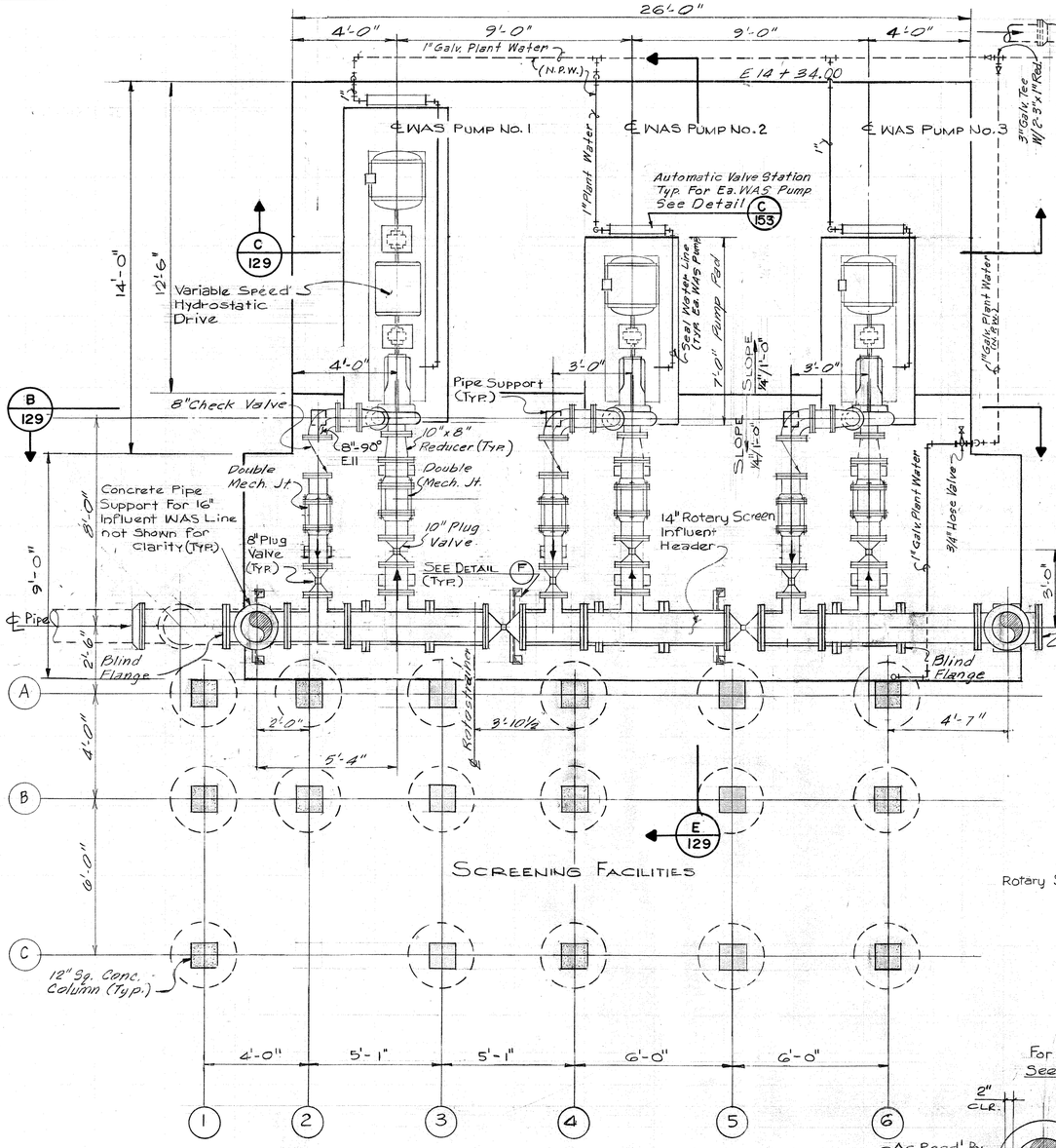

PLAN @ EL. 58.00 — A 129
SCALE: 3/8" = 1'-0"

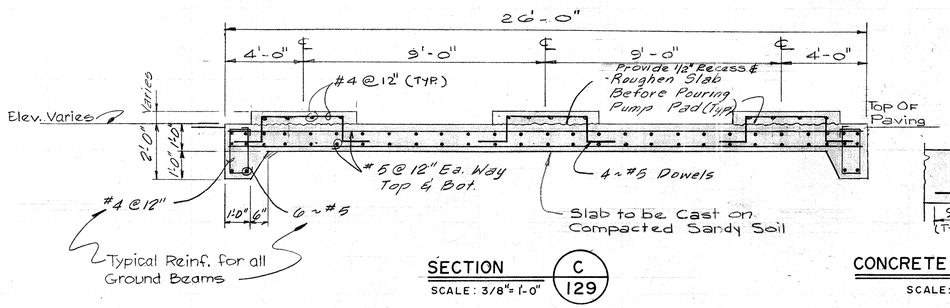

SECTION — C 129
SCALE: 3/8" = 1'-0"

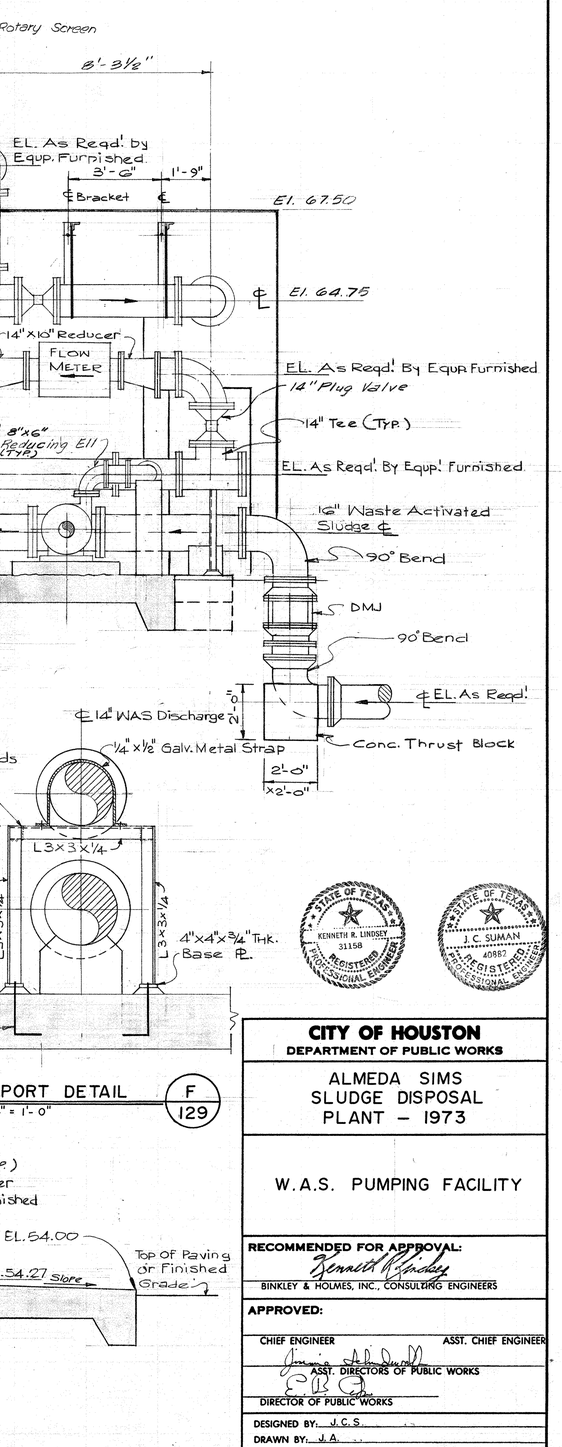

CONCRETE PIPE SUPPORT DETAIL — D 129
SCALE: 3/8" = 1'-0"

TYPICAL PIPE SUPPORT DETAIL — F 129
SCALE: 3/4" = 1'-0"

SECTION — E 129
SCALE: 3/8" = 1'-0"

CITY OF HOUSTON
DEPARTMENT OF PUBLIC WORKS

ALMEDA SIMS
SLUDGE DISPOSAL
PLANT — 1973

W.A.S. PUMPING FACILITY

RECOMMENDED FOR APPROVAL:
Kenneth R. Lindsey
BINKLEY & HOLMES, INC., CONSULTING ENGINEERS

APPROVED:
CHIEF ENGINEER — ASST. CHIEF ENGINEER
ASST. DIRECTORS OF PUBLIC WORKS
DIRECTOR OF PUBLIC WORKS

DESIGNED BY: J.C.S.
DRAWN BY: J.A.
CHECKED BY: S.R.S.
SCALE: AS SHOWN
DATE: MAR. 1977
SHEET 129 OF 200 SHEETS
DRAWING NO.

STATE OF TEXAS — KENNETH R. LINDSEY — 31158 — REGISTERED PROFESSIONAL ENGINEER
STATE OF TEXAS — J.C. SUMAN — 40882 — REGISTERED PROFESSIONAL ENGINEER

116

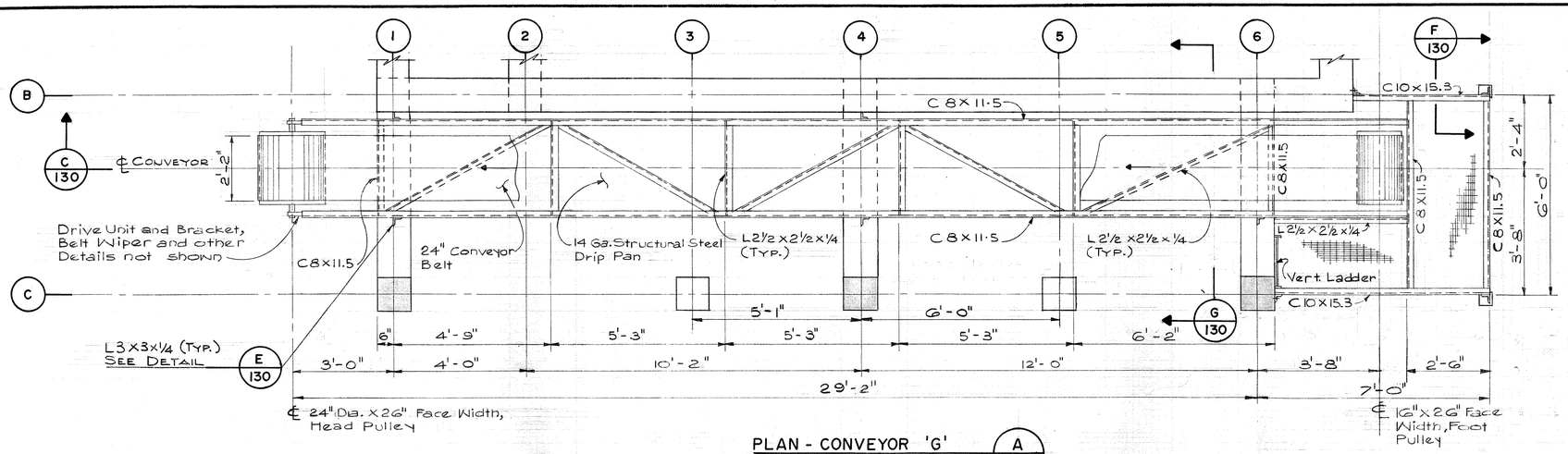

PLAN - CONVEYOR 'G'

SCALE: 1/2" = 1'-0"

A 130

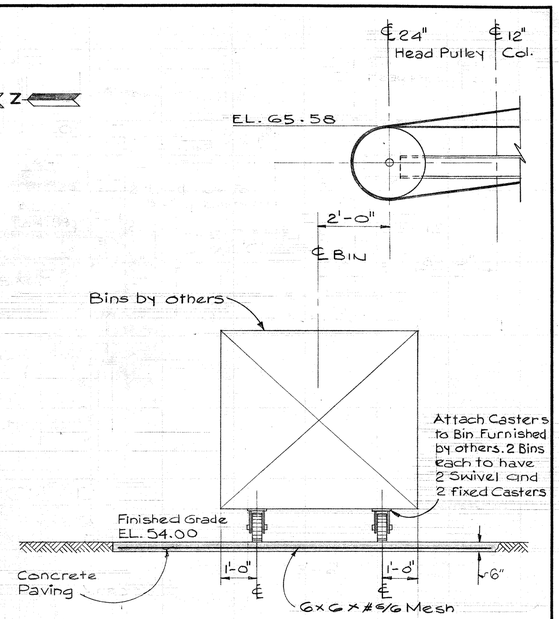

SCREENING COLLECTING BIN

SCALE: 1/2" = 1'-0"

B 130

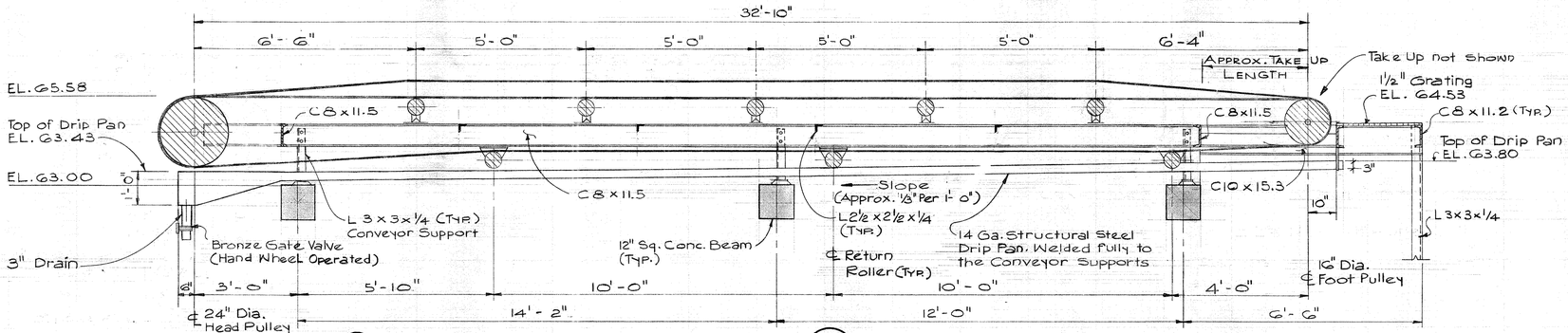

SECTION

SCALE: 1/2" = 1'-0"

C 130

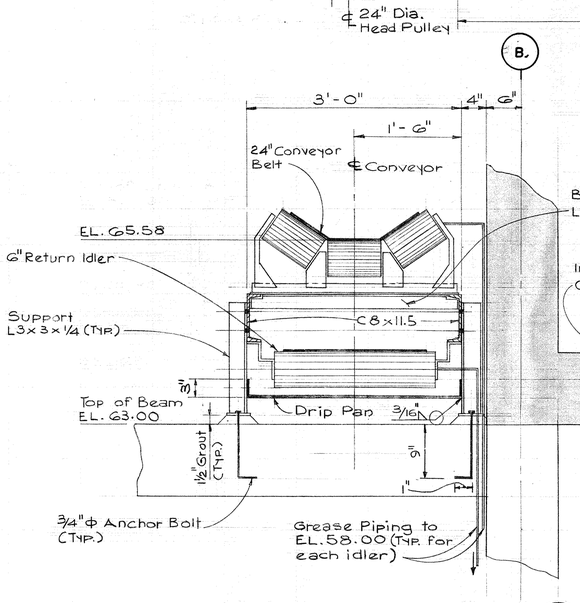

TYPICAL DETAIL OF CONVEYOR

SCALE: 1" = 1'-0"

D 130

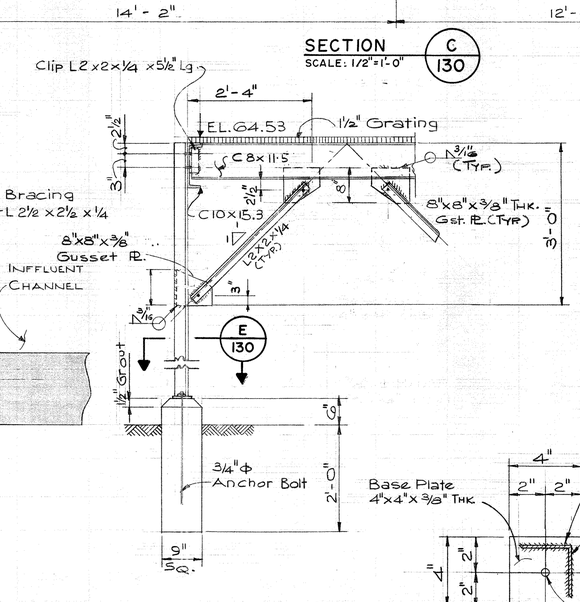

SECTION

SCALE: 3/4" = 1'-0"

F 130

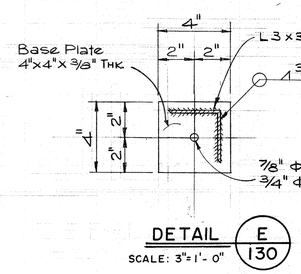

DETAIL

SCALE: 3" = 1'-0"

E 130

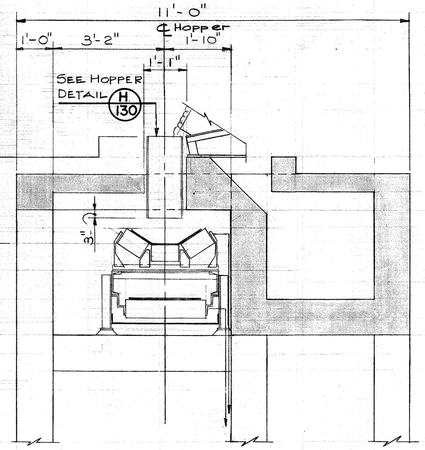

SECTION

SCALE: 1/2" = 1'-0"

G 130

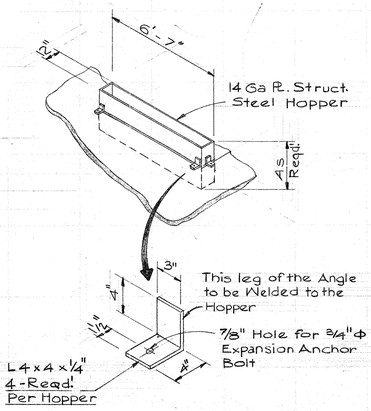

DETAIL OF HOPPER

N.T.S.

H 130

STATE OF TEXAS — KENNETH R. LINDSEY — 31158 — REGISTERED PROFESSIONAL ENGINEER

STATE OF TEXAS — J. C. SUMAN — 40887 — REGISTERED PROFESSIONAL ENGINEER

CITY OF HOUSTON
DEPARTMENT OF PUBLIC WORKS

ALMEDA SIMS SLUDGE DISPOSAL PLANT — 1973

SCREENING FACILITY CONVEYOR DETAILS

RECOMMENDED FOR APPROVAL:
Kenneth R. Lindsey
BINKLEY & HOLMES, INC., CONSULTING ENGINEERS

APPROVED:
CHIEF ENGINEER — ASST. CHIEF ENGINEER
ASST. DIRECTORS OF PUBLIC WORKS
DIRECTOR OF PUBLIC WORKS

DESIGNED BY: J.C.S.
DRAWN BY: J.A.
CHECKED BY: S.R.S.
SCALE: AS SHOWN
DATE: MAR. 1977
SHEET 130 OF 200 SHEETS
DRAWING NO.

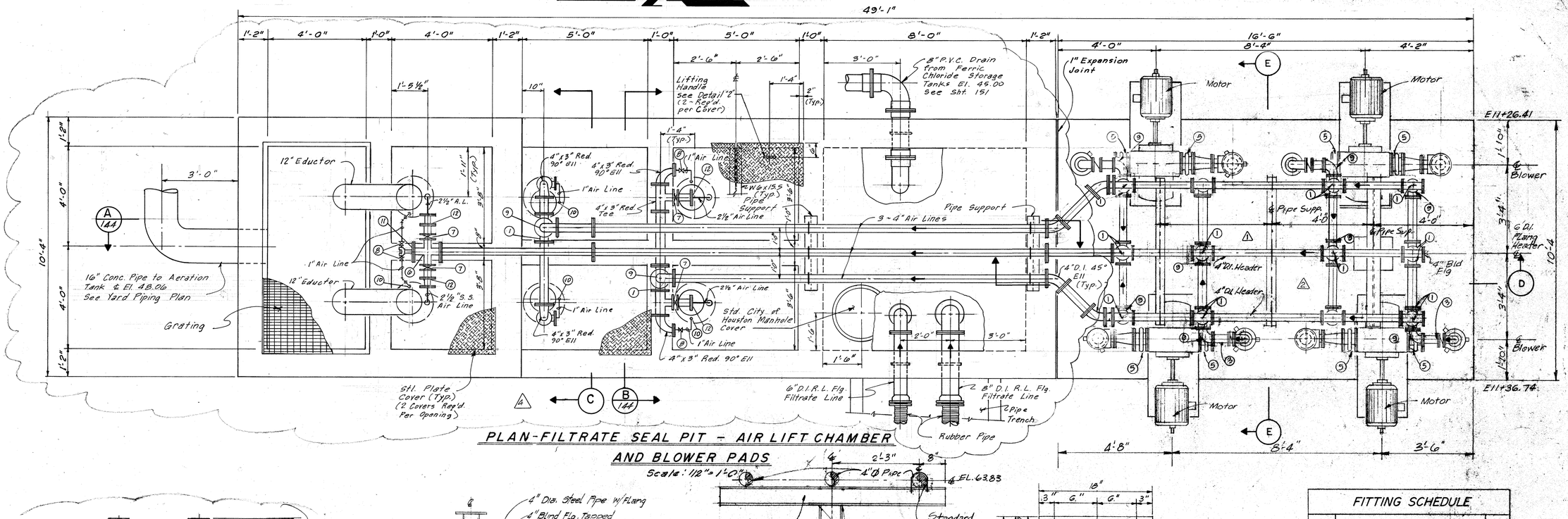

PLAN-FILTRATE SEAL PIT - AIR LIFT CHAMBER AND BLOWER PADS

Scale: 1/2" = 1'-0"

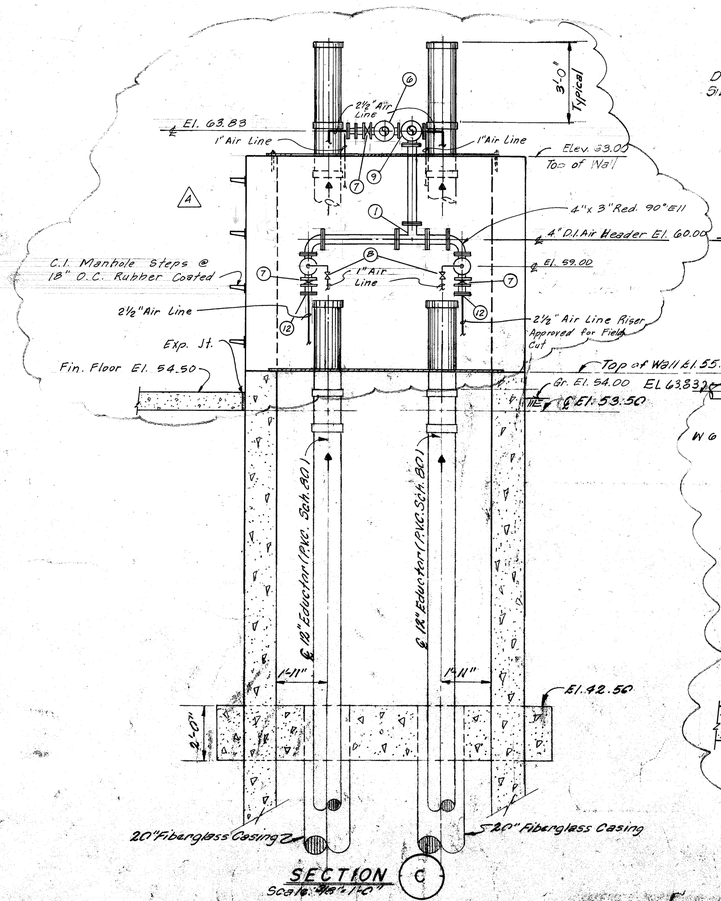

SECTION

Scale: 3/4" = 1'-0"

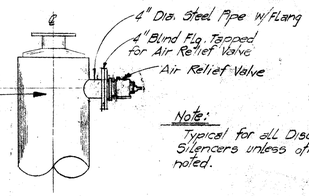

Note: Typical for all Discharge Silencers unless otherwise noted.

AIR RELIEF VALVE DETAIL

Scale: 3/4" = 1'-0"

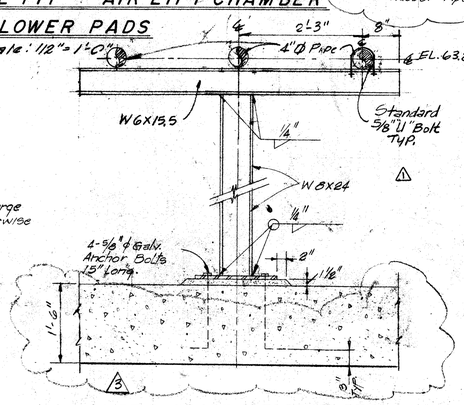

PIPE SUPPORT & FOOTING DETAIL

Scale: 3/4" = 1'-0"

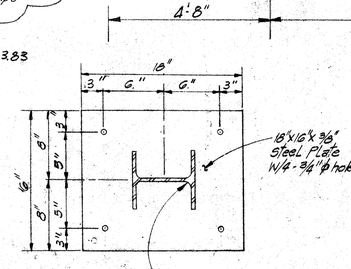

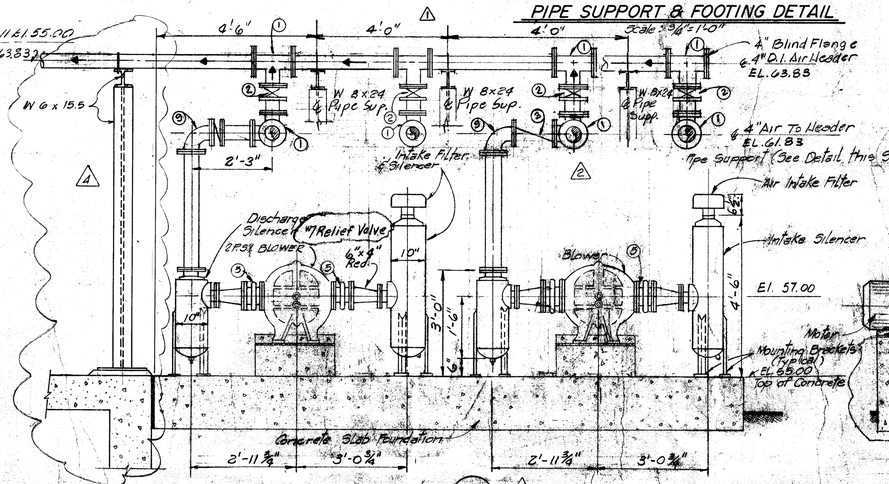

SECTION

Scale: 1/2" = 1'-0"

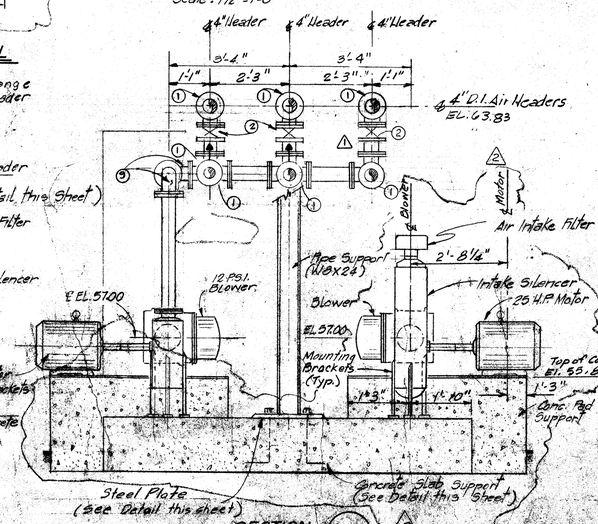

STEEL PLATE DETAIL

Scale: 1/16" = 1'-0"

SECTION

Scale: None

FITTING SCHEDULE

No.	DESCRIPTION
①	4" DI. Flang Tee
②	4" Watter Butterfly Valve W/C Hain Operator
③	4" Flang Check Valve
⑤	6" Flang Expansion Joint
⑥	4" x 8" Red. Cross
⑦	3" Watter Butterfly Valve
⑧	1" Corporation Stop
⑨	4" DI. 90° Bend
⑩	1" Stainless Steel 90° Bend
⑪	2" x 9" Red. Flg.
⑫	2½" x 1½" Red. Flg.

REV. NO.	DATE	DESCRIPTION	DESIGN	CHECKED
4	8-79	Construction Revisions Reldcate. of Filtrate Seal Pit	A.C.B.	H.J.K.
3	6-79	Construction Revisions Blower Foundations & Slab	A.C.B.	H.J.K.
2	6-77	Rev. Air Headers	J.C.S.	K.R.L.
1	3-77	Change Air Header To 3 Air Header - Rev. Schedule And Piping	J.C.S.	S.R.S.

CITY OF HOUSTON
DEPARTMENT OF PUBLIC WORKS

ALMEDA SIMS SLUDGE DISPOSAL PLANT - 1973

FILTRATE SEAL PIT & AIR LIFT BLOWERS PLAN & DETAILS

RECOMMENDED FOR APPROVAL:
BINKLEY & HOLMES, INC., CONSULTING ENGINEERS

APPROVED:
CHIEF ENGINEER — ASST. CHIEF ENGINEER
ASST. DIRECTORS OF PUBLIC WORKS
DIRECTOR OF PUBLIC WORKS

DESIGNED BY: M.B.T.
DRAWN BY: I. GONZALEZ
CHECKED BY: M.B.T.
SCALE: AS SHOWN
DATE: Dec. 1979
SHEET: 148 OF 200 SHEETS
DRAWING NO. 1804B

118

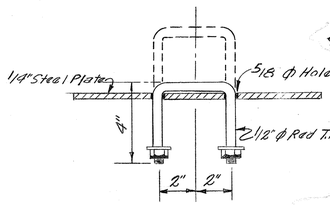

DETAIL -"2"
LIFTING HANDLE (8 REQ'D)
Scale: 3"=1'-0"

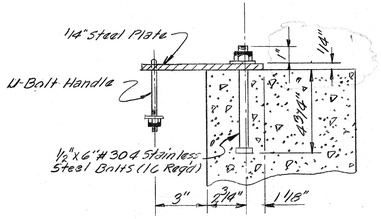

DETAIL "3"
TYPICAL EA. CORNER EA PLATE
Scale: 3"=1'-0"

DETAIL -"4"
Scale: 1"=1'-0"

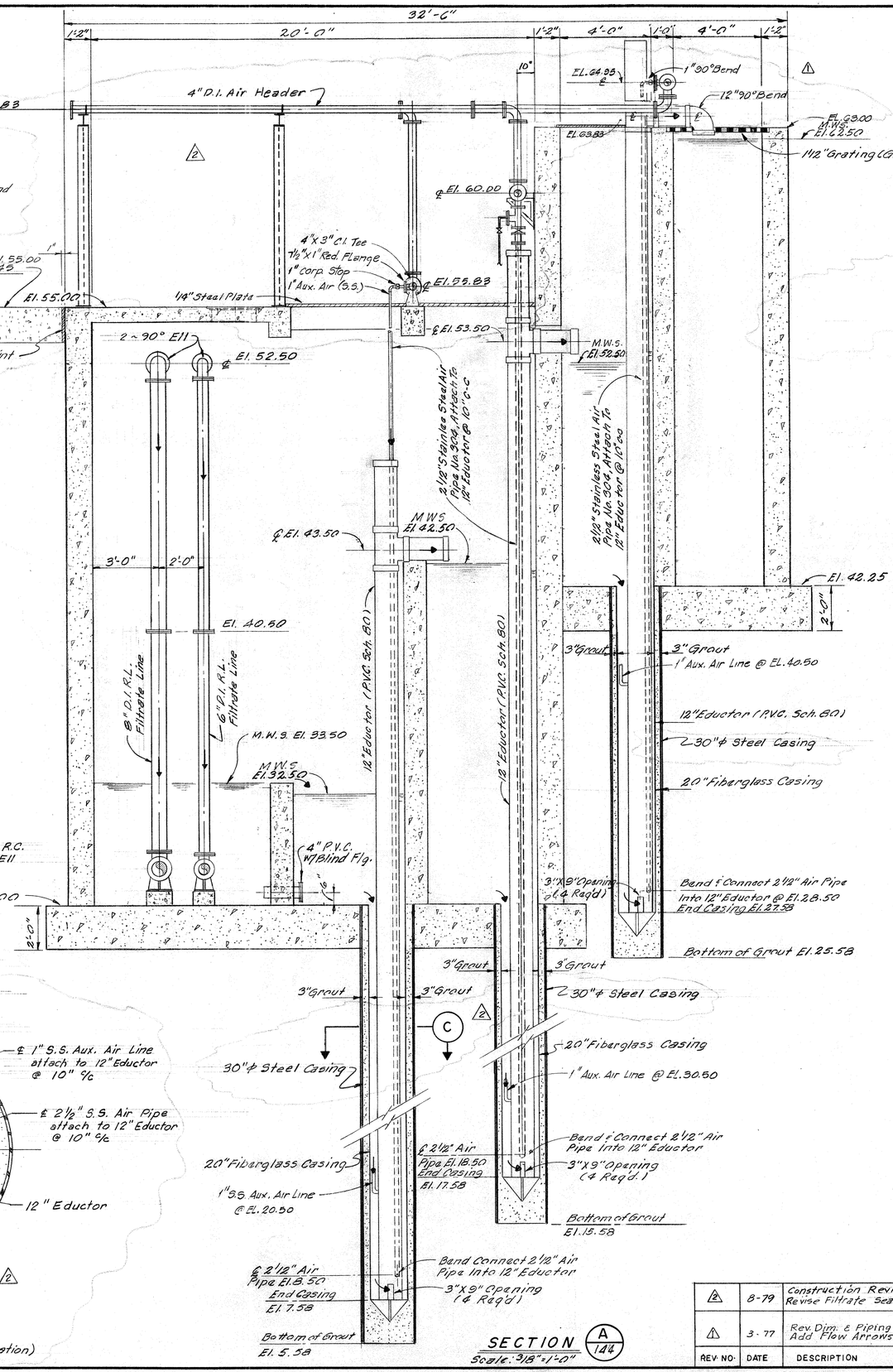

SECTION (A / 144)
Scale: 3/8"=1'-0"

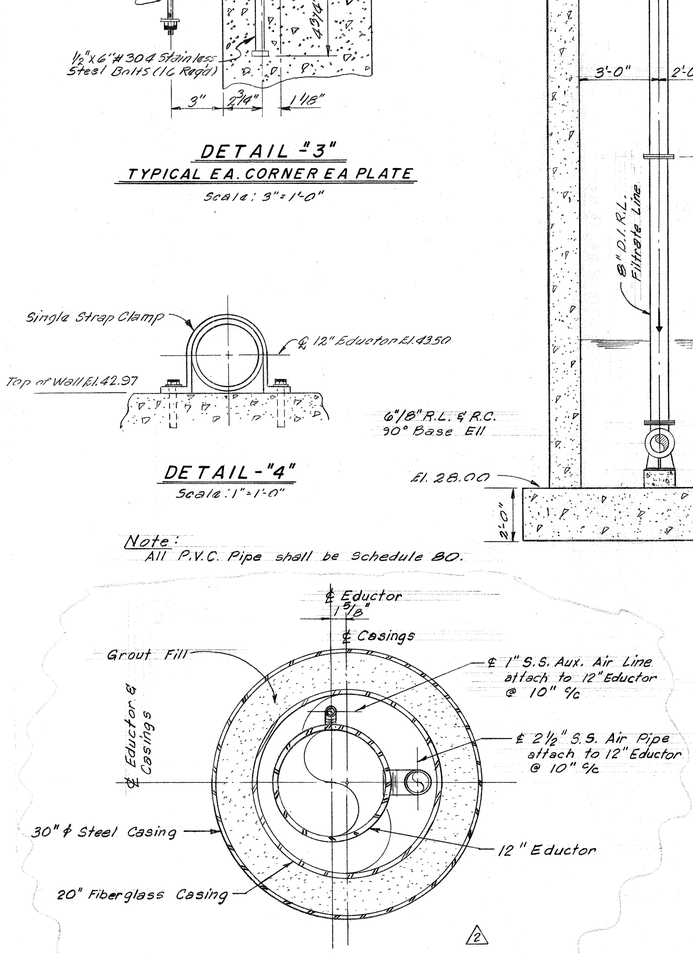

TYPICAL SECTION (C / 144)
Scale: 1 1/2"=1'-0"
(See Plan Sht. 143 for Proper Orientation)

Note:
All P.V.C. Pipe shall be Schedule 80.

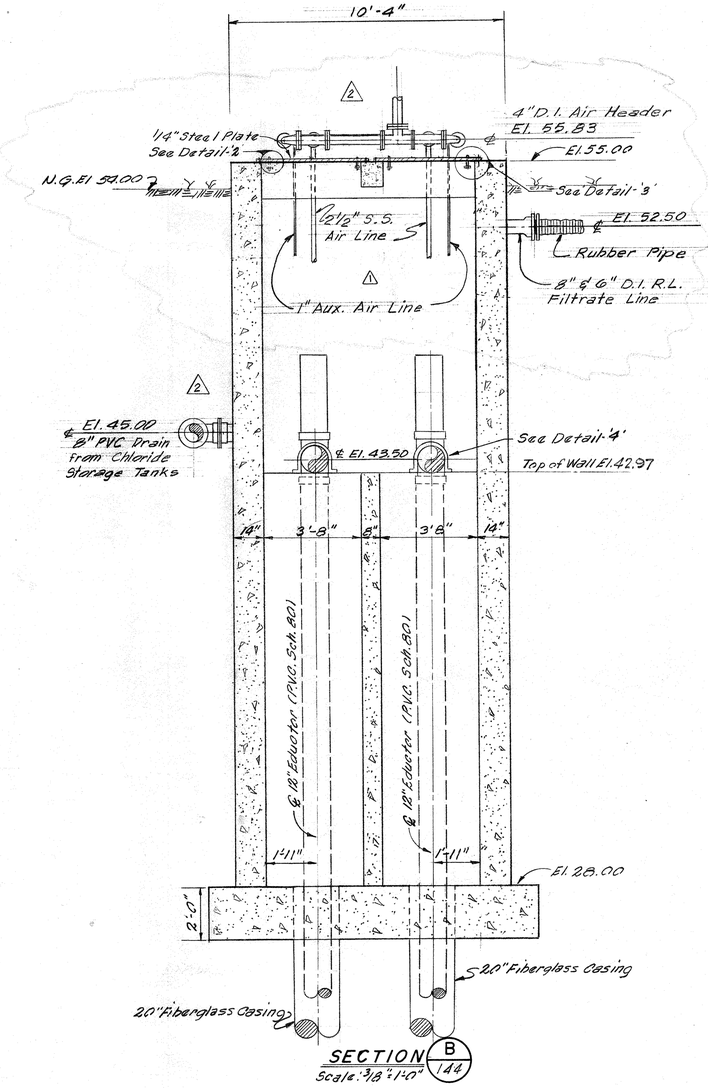

SECTION (B / 144)
Scale: 3/8"=1'-0"

REV. NO.	DATE	DESCRIPTION	DESIGN	CHECKED
2	8-79	Construction Revisions Revise Filtrate Seal Pit	A.C.B.	H.J.K.
1	3-77	Rev. Dim. & Piping Add Flow Arrows	J.C.S	S.R.S.

CITY OF HOUSTON
DEPARTMENT OF PUBLIC WORKS

ALMEDA SIMS
SLUDGE DISPOSAL
PLANT - 1973

FILTRATE SEAL PIT & AIR LIFT SECTIONS & DETAILS

RECOMMENDED FOR APPROVAL:
BINKLEY & HOLMES, INC., CONSULTING ENGINEERS

APPROVED:
CHIEF ENGINEER — ASST. CHIEF ENGINEER
ASST. DIRECTORS OF PUBLIC WORKS
DIRECTOR OF PUBLIC WORKS

DESIGNED BY: M. B. J.
DRAWN BY: J. Gonzales
CHECKED BY: M. B. J.
SCALE: AS SHOWN
DATE: Dec., 1973
SHEET 144 OF 200 SHEETS
DRAWING NO. 18045

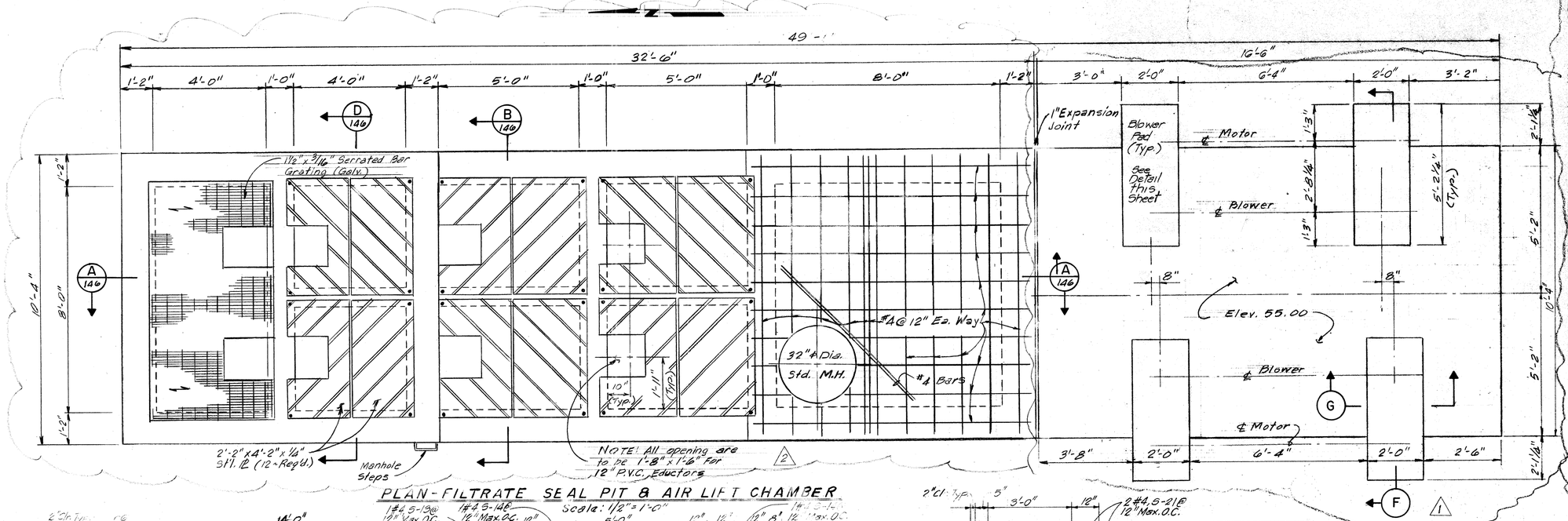

MARK	SIZE	TYPE	SPACE	LENGTH	NO. REQ'D.
S-1	#4	STR.	12"	10'-0"	14
S-2	#4	STR.	12"	6'-4"	2
S-3	#4	STR.	12"	5'-10"	2
S-4	#4	STR.	12"	1'-7"	4
S-5	#4	STR.	12"	11'-2"	2
S-6	#4	STR.	12"	9'-10"	14
S-7	#4	STR.	12"	6'-0"	4
S-8	#4	STR.	12"	6'-0"	2
S-9	#4	STR.	12"	1'-9"	4
S-10	#4	STR.	12"	1'-3"	2
S-11	#4	STR.	3"	5'-0"	4
S-12	#4	STR.	12"	12'-0"	40
S-13	#4	STR.	12"	3'-5"	12
S-14	#4	STR.	12"	2'-11"	6
S-15	#4	STR.	12"	2'-3"	4
S-16	#4	STR.	12"	24'-0"	16
S-17	#4	STR.	12"	14'-4"	8
S-18	#4	STR.	12"	4'-4"	8
S-19	#4	STR.	12"	2'-0"	8
S-20	#4	STR.	12"	12'-0"	18
S-21	#4	STR.	12"	3'-0"	16
S-22	#4	STR.	12"	2'-6"	4
S-23	#4	STR.	12"	10'-10"	16
S-24	#4	STR.	12"	6'-0"	8
S-25	#4	STR.	3"	9'-5"	4
S-26	#4	STR.	12"	10'-0"	28
S-27	#4	STR.	12"	3'-0"	25
S-28	#4	STR.	12"	2'-10"	10
S-29	#4	STR.	12"	16'-2"	9
S-30	#4	STR.	12"	2'-7"	10
S-31	#4	STR.	12"	5'-11	20
S-32	#4	STR.	12"	2'-6"	10
S-33	#4	STR.	12"	2'-11"	10

1

PLAN - FILTRATE SEAL PIT & AIR LIFT CHAMBER

Scale: 1/2" = 1'-0"

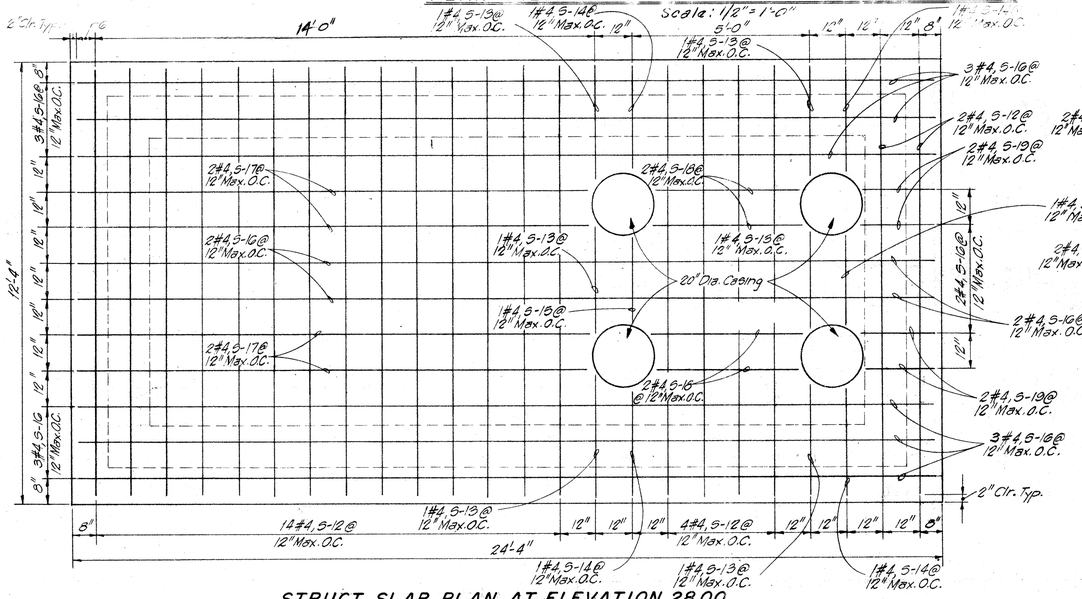

STRUCT. SLAB PLAN AT ELEVATION 28.00

Scale: 1/2" = 1'-0"

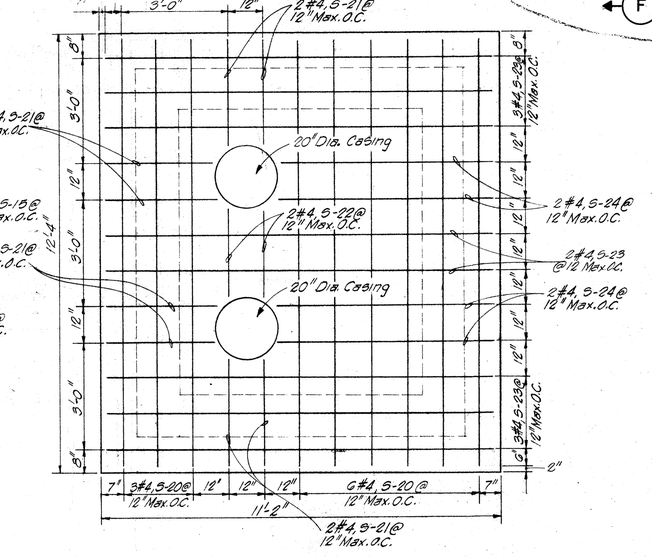

STRUCT. SLAB PLAN AT ELEVATION 42.25

Scale: 1/2" = 1'-0"

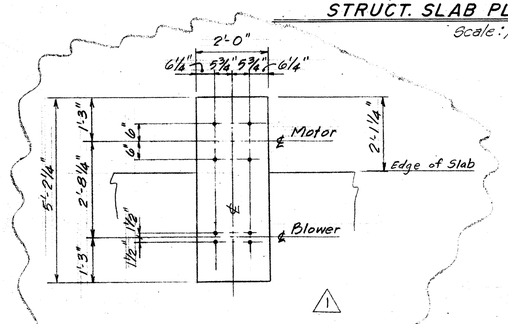

TYPICAL ANCHOR BOLT PLAN

Scale: 1/2" = 1'-0"

NOTE:
1. All Reinforcing Steel Cell-outs on plans are Top & bottom.

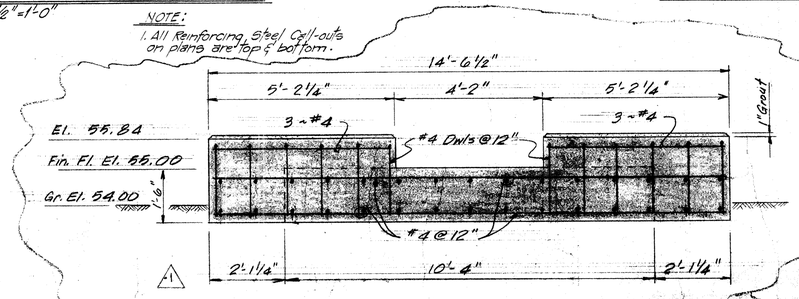

SECTION F

Scale: 1/2" = 1'-0"

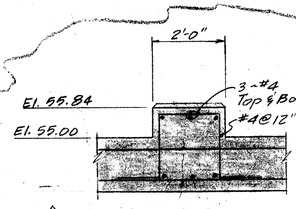

SECTION G

Scale: 1/2" = 1'-0"

REV. NO.	DATE	DESCRIPTION	DESIGN	CHECKED
2	8-79	Construction Revisions Relocate Filtrate Seal Pit	A.C.B.	H.J.K.
1	6-79	Construction Revisions Blower Foundation Delete Bar Schedule & Struct. Slab Plan @ El. 55.00	A.C.B.	H.J.K.

CITY OF HOUSTON
DEPARTMENT OF PUBLIC WORKS

ALMEDA SIMS
SLUDGE DISPOSAL
PLANT – 1973

FILTRATE SEAL PIT & AIR LIFT CHAMBER AND BLOWERS PAD STRUCTURAL PLAN

RECOMMENDED FOR APPROVAL:
BINKLEY & HOLMES, INC., CONSULTING ENGINEERS

APPROVED:
CHIEF ENGINEER
ASST. CHIEF ENGINEER
ASST. DIRECTORS OF PUBLIC WORKS
DIRECTOR OF PUBLIC WORKS

DESIGNED BY: V. Jafri
DRAWN BY: I. GONZALEZ
CHECKED BY: M.B.J.
SCALE: AS SHOWN
DATE: Dec., 1973
SHEET 145 OF 200 SHEETS
DRAWING NO. 18048

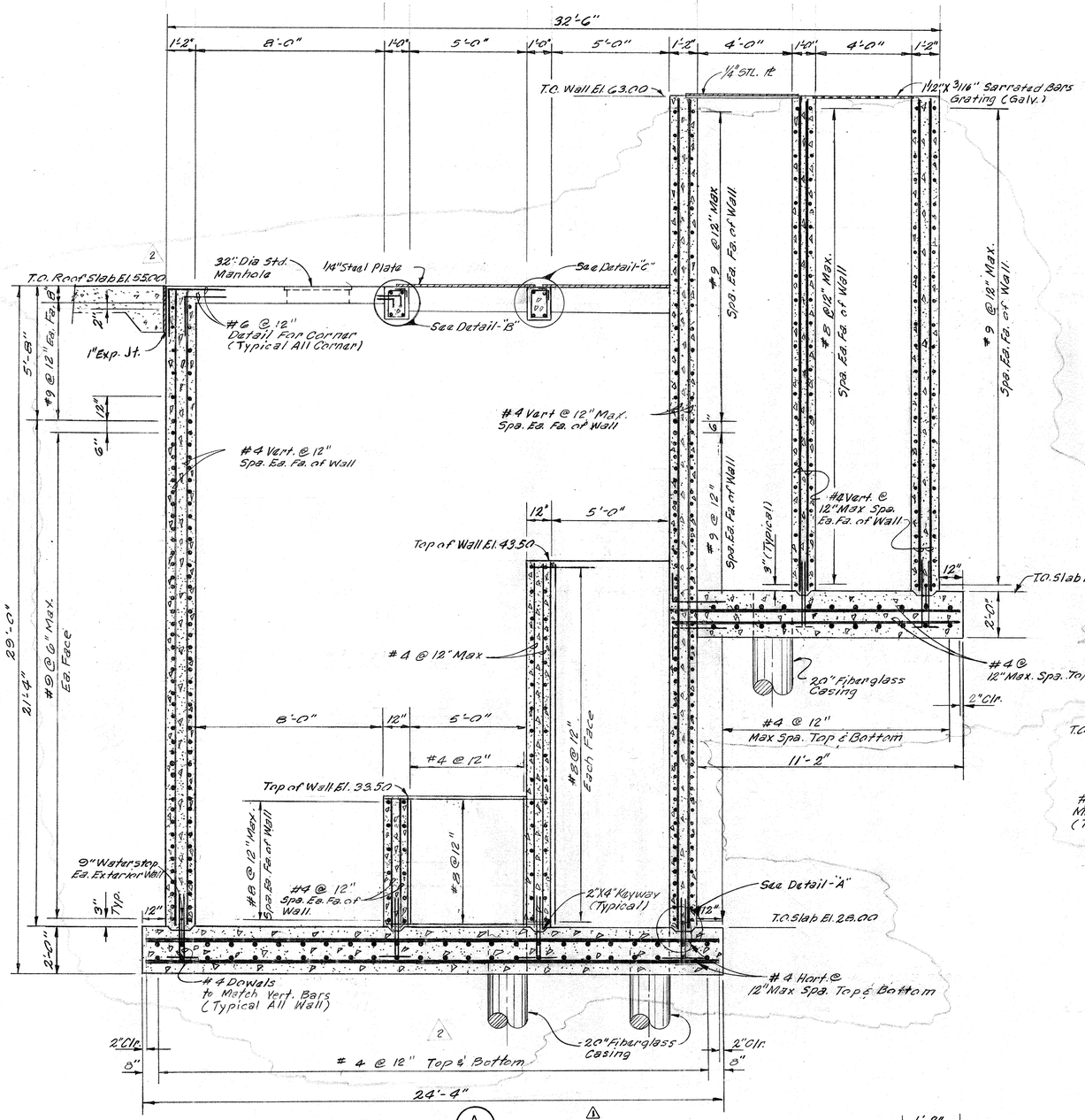

SECTION (A/146)
Scale: 3/8"=1'-0"

DETAIL - "B"
N.T.S.

DETAIL - "C"
N.T.S.

DETAIL - "D"
N.T.S.

DETAIL "A"
N.T.S.

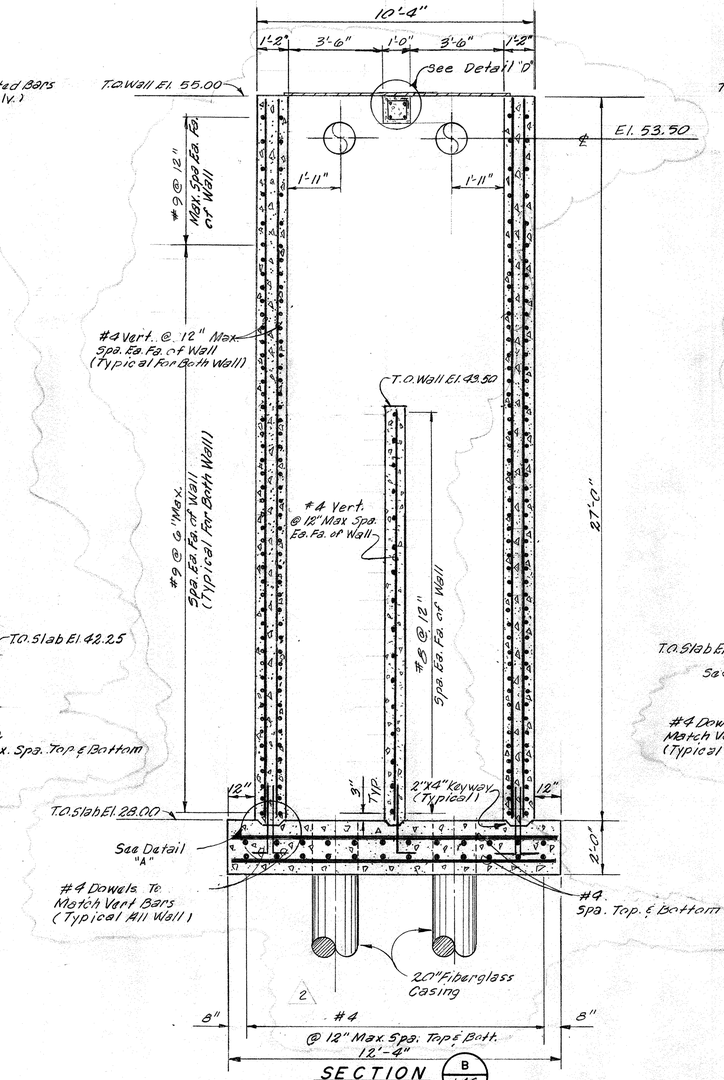

SECTION (B/146)
Scale: 3/8"=1'-0"

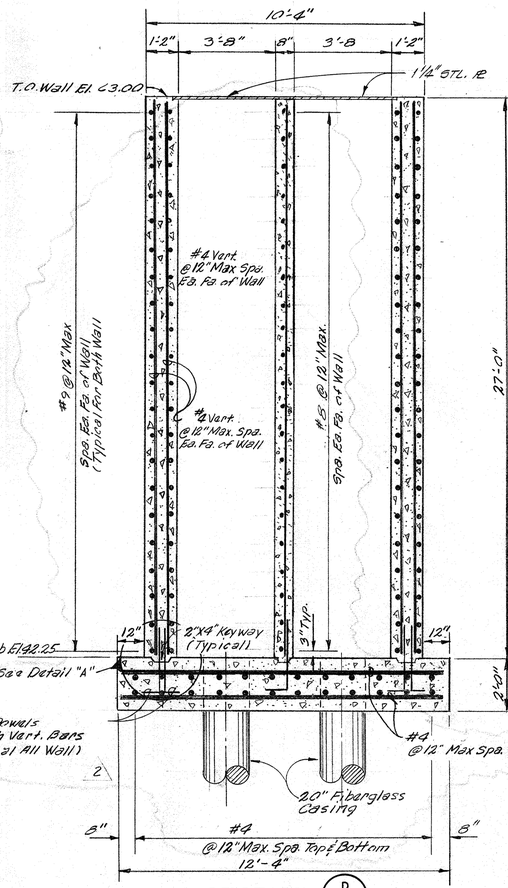

SECTION (D/146)
Scale: 3/8"=1'-0"

REINFORCING STEEL SCHEDULE FOR FILTRATE SEAL PIT AND AIR LIFT CHAMBER

MARK	TYPE	SIZE	NO. REQ'D	LENGTH PER BAR	BENT BAR DIM. "A"	"B"	"C"
W-1	STR.	#9	260	10'-0"			
W-2	STR.	#4	110	26'-8"			
W-3	STR.	#8	88	10'-0"			
W-4	STR.	#4	12	5'-0"			
W-5	STR.	#8	46	6'-0"			
W-6	STR.	#4	30	15'-0"			
W-7	STR.	#4	22	34'-8"			
W-8	STR.	#4	186	20'-5"			
W-9	STR.	#9	200	22'-0"			
W-10	STR.	#9	88	10'-10"			
W-11	STR.	#8	44	5'-0"			
W-12	STR.	#5	4	12'-0"			
W-13	STR.	#8	8	9'-8"			
W-14	STR.	#3	10	2'-0"	8"	1'-0"	2"
W-15	STR.	#3	10	1'-10"	8"	8"	2"
W-16	STR.	#4	204	3'-0"	2'-0"	1'-0"	
W-17	STR.	#4	76	3'-0"	1'-6"	1'-6"	

REV. NO.	DATE	DESCRIPTION	DESIGN	CHECKED
2	8-79	Construction Revisions Revised 8" Wall Reinforcing & Type "1" Bars & Delete Bar Schedule	H.J.K.	H.J.K.
1	5-77	Rev. Dimensions & keyway	J.C.S.	S.R.S.

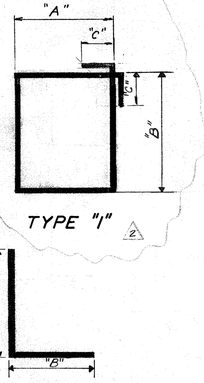

TYPE "1"

TYPE "2"

BENT BAR DETAILS

CITY OF HOUSTON
DEPARTMENT OF PUBLIC WORKS

ALMEDA SIMS SLUDGE DISPOSAL PLANT - 1973

FILTRATE SEAL PIT & AIR LIFT CHAMBER SECTIONS & DETAILS

RECOMMENDED FOR APPROVAL:
BINKLEY & HOLMES, INC., CONSULTING ENGINEERS

APPROVED:
CHIEF ENGINEER — ASST. CHIEF ENGINEER
ASST. DIRECTORS OF PUBLIC WORKS
DIRECTOR OF PUBLIC WORKS

DESIGNED BY: V. Jafri
DRAWN BY: I. Gonzalez
CHECKED BY: M. A. J.
SCALE: As Shown
DATE: Dec., 1973
SHEET 146 OF 200 SHEETS
DRAWING NO. 18045

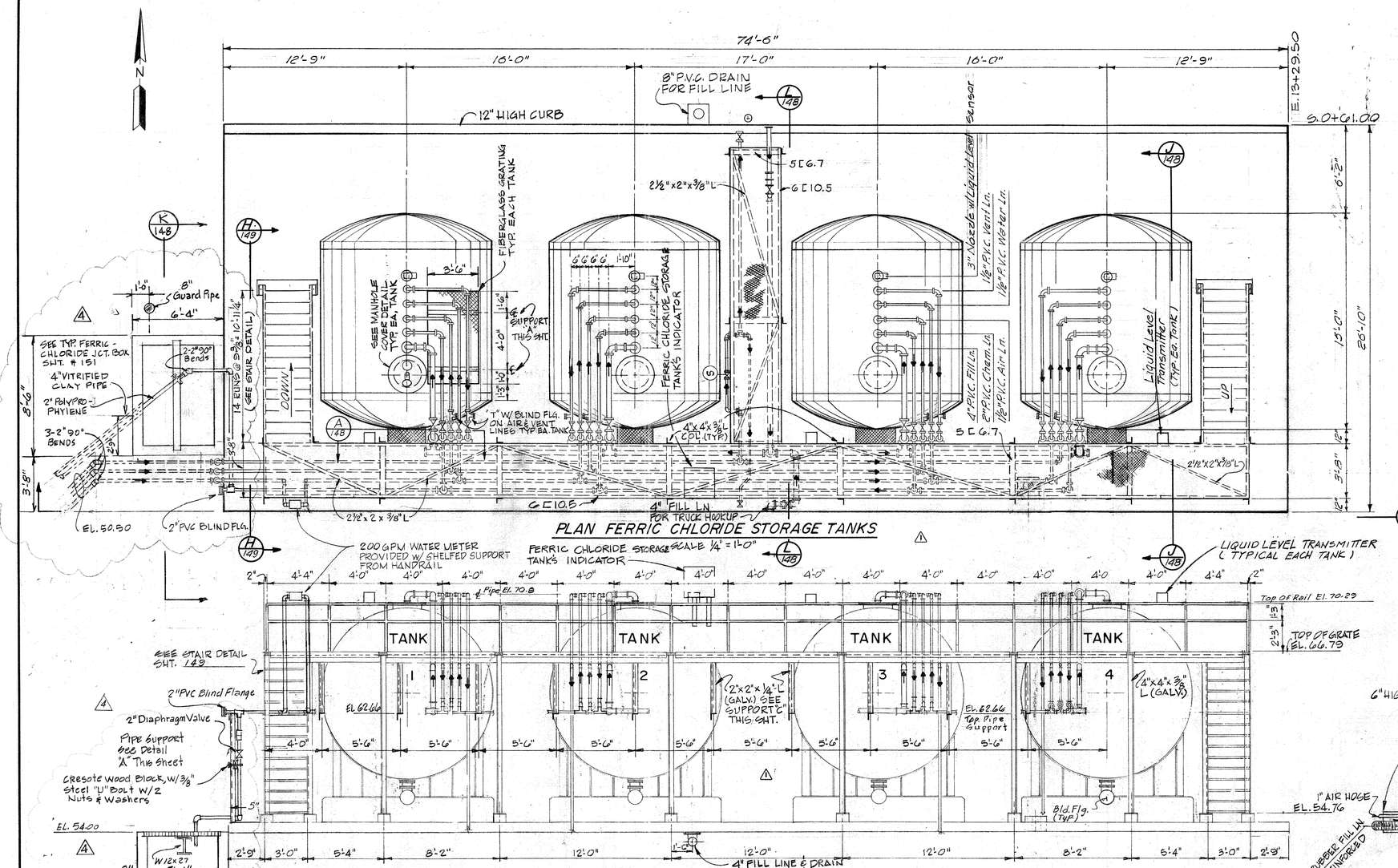

REV. NO.	DATE	DESCRIPTION	DESIGN	CHECKED
4	10-79	Construction Revisions Reroute Ferric Supply Line & Added Pit.	N.G.W.	H.J.K.
3	11-78	Permit Revision	H.J.K.	K.R.L.
2	6-77	Add Trench For Ferric Chloride Line	J.C.S	K.R.L.
1	3-77	Relocate Truck Unloading Station - Add Flow Arrows Rev. Piping & Controls	D.C.	S.R.S.

CITY OF HOUSTON
DEPARTMENT OF PUBLIC WORKS

ALMEDA SIMS
SLUDGE DISPOSAL
PLANT - 1973

FERRIC CHLORIDE STORAGE
EQUIPMENT LAYOUT & DETAILS

RECOMMENDED FOR APPROVAL:
Paul J. Holmes
BINKLEY & HOLMES, INC., CONSULTING ENGINEERS

APPROVED:
Walter Sullivan
CHIEF ENGINEER — ASST. CHIEF ENGINEER
ASST. DIRECTOR OF PUBLIC WORKS
E. B. Cape
DIRECTOR OF PUBLIC WORKS

DESIGNED BY: M. B. J.
DRAWN BY: M. MUNIZ
CHECKED BY: M. B. J.
SCALE: 1/4" = 1'-0"
DATE: Dec., 1973
SHEET 147 OF 200 SHEETS
DRAWING NO. 18045

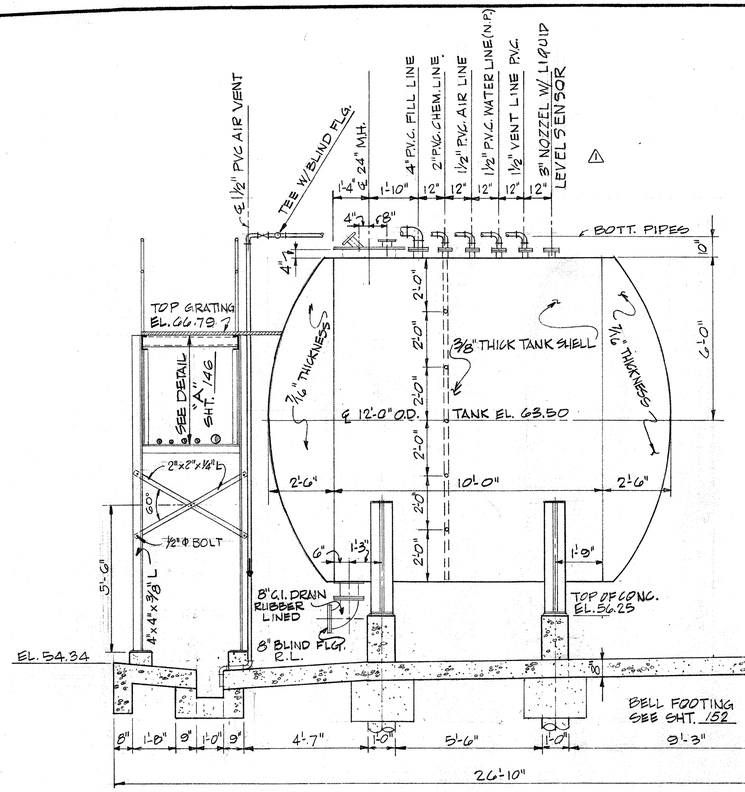

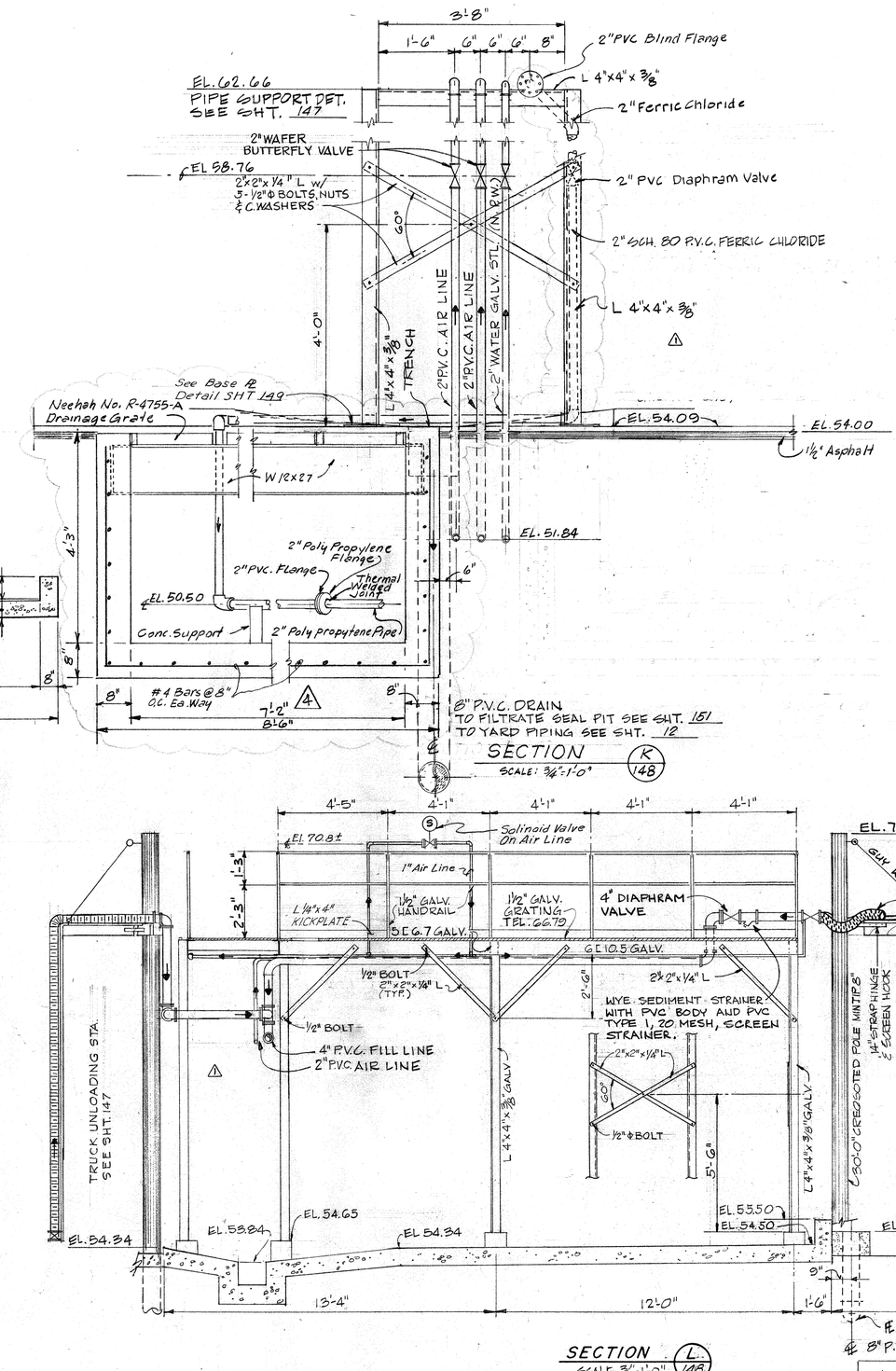

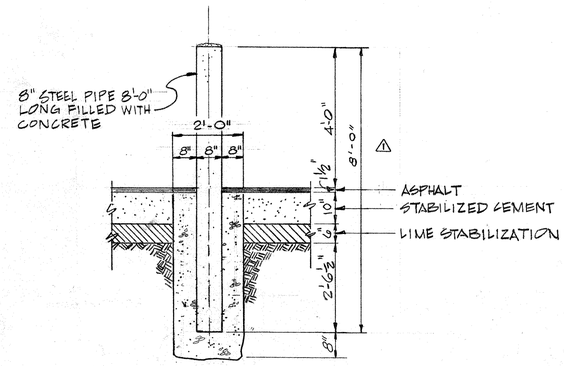

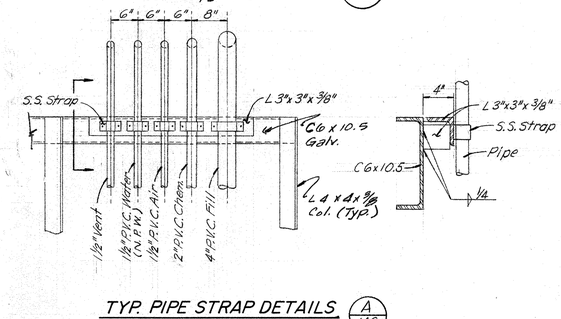

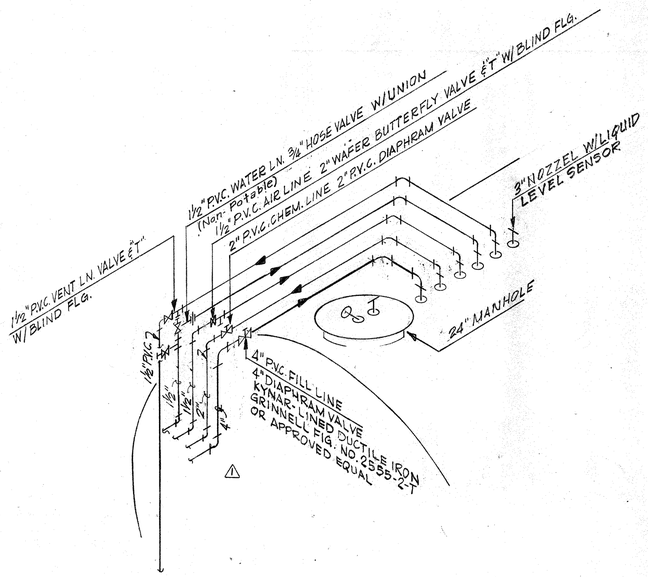

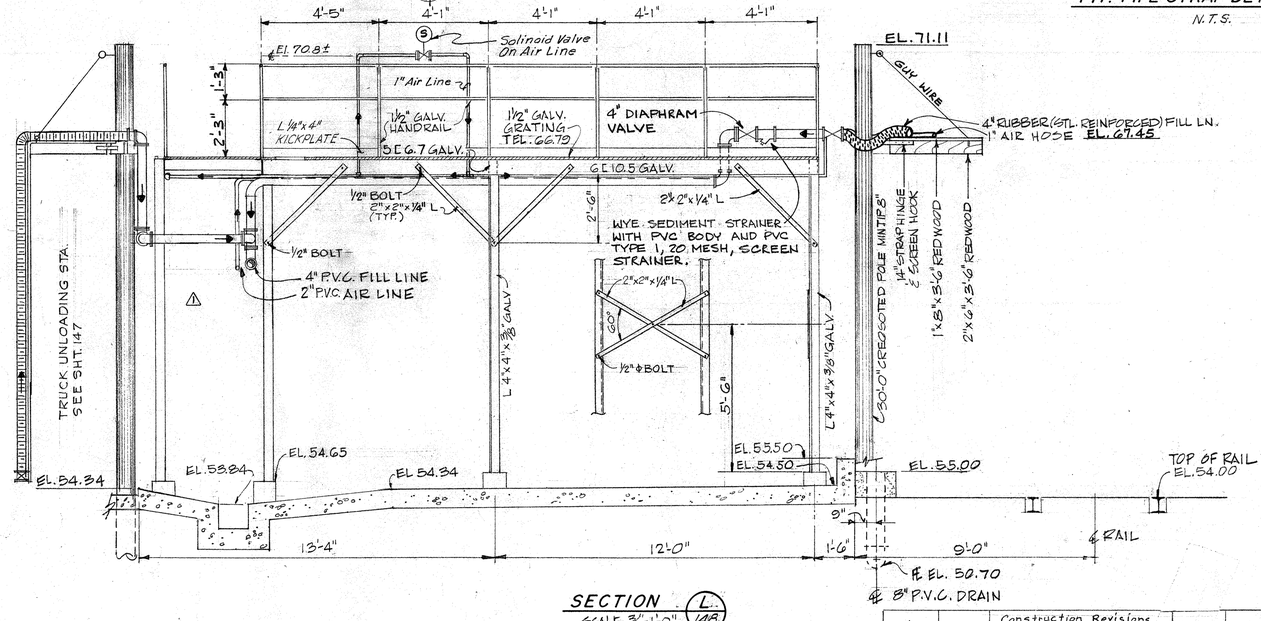

REV. NO.	DATE	DESCRIPTION	DESIGN	CHECKED
4	10-79	Construction Revisions Remove Trench & Added Junction Box	W. G. W.	H. J. K.
3	11-78	Permit Revision	H.J.K.	K.R.L.
2	6-77	Add Trench For Ferric Line	J.C.S	K.R.L.
1	3-77	Add Flow Arrows - Rev. Piping Rev. Structure - Add Solinoid Valve.	J.C.S	S.R.S.

CITY OF HOUSTON
DEPARTMENT OF PUBLIC WORKS

ALMEDA SIMS
SLUDGE DISPOSAL
PLANT - 1973

FERRIC CHLORIDE STORAGE
SECTIONS & DETAILS

RECOMMENDED FOR APPROVAL:
BINKLEY & HOLMES, INC., CONSULTING ENGINEERS

APPROVED:
CHIEF ENGINEER — ASST. CHIEF ENGINEER
ASST. DIRECTORS OF PUBLIC WORKS
DIRECTOR OF PUBLIC WORKS

DESIGNED BY: M.B.J.
DRAWN BY: M.MUNIZ
CHECKED BY: M.B.J.
SCALE: AS NOTED
DATE: Dec., 1973
SHEET 148 OF 200 SHEETS
DRAWING NO. 18045

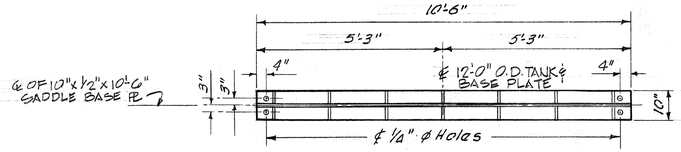

PLAN

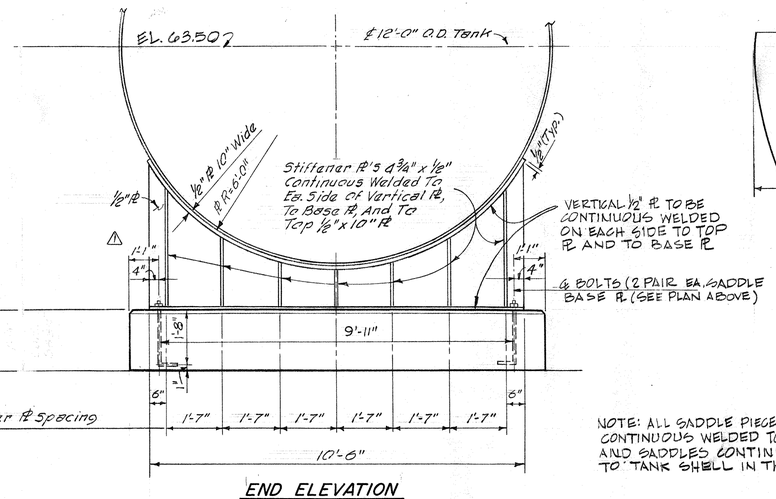

END ELEVATION

SCALE: ½" = 1'-0"

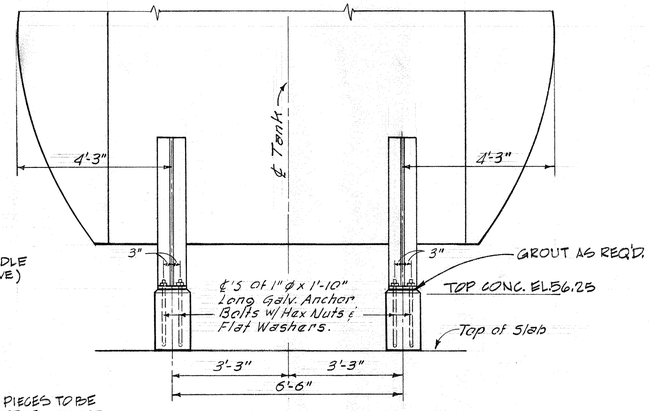

SIDE ELEVATION

NOTE: ALL SADDLE PIECES TO BE CONTINUOUS WELDED TOGETHER AND SADDLES CONTINUOUS WELDED TO TANK SHELL IN THE SHOP

TANK SADDLE DETAILS

Scale: ½" = 1'-0"

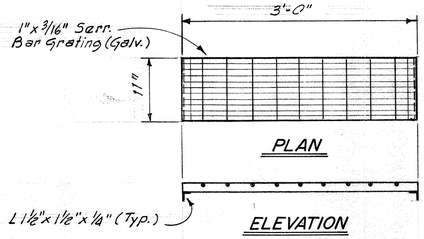

PLAN

ELEVATION

STAIR TREAD DETAIL

Scale: 1" = 1'-0"

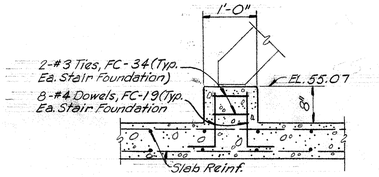

STAIR FOUNDATION DETAIL

Scale: 3/4" = 1'-0"

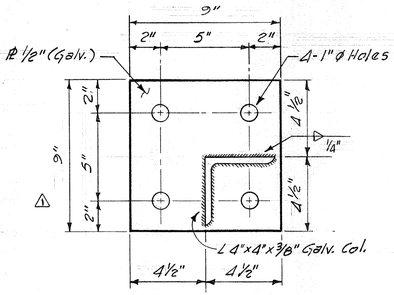

BASE PLATE DETAIL

Scale: 3" = 1'-0"

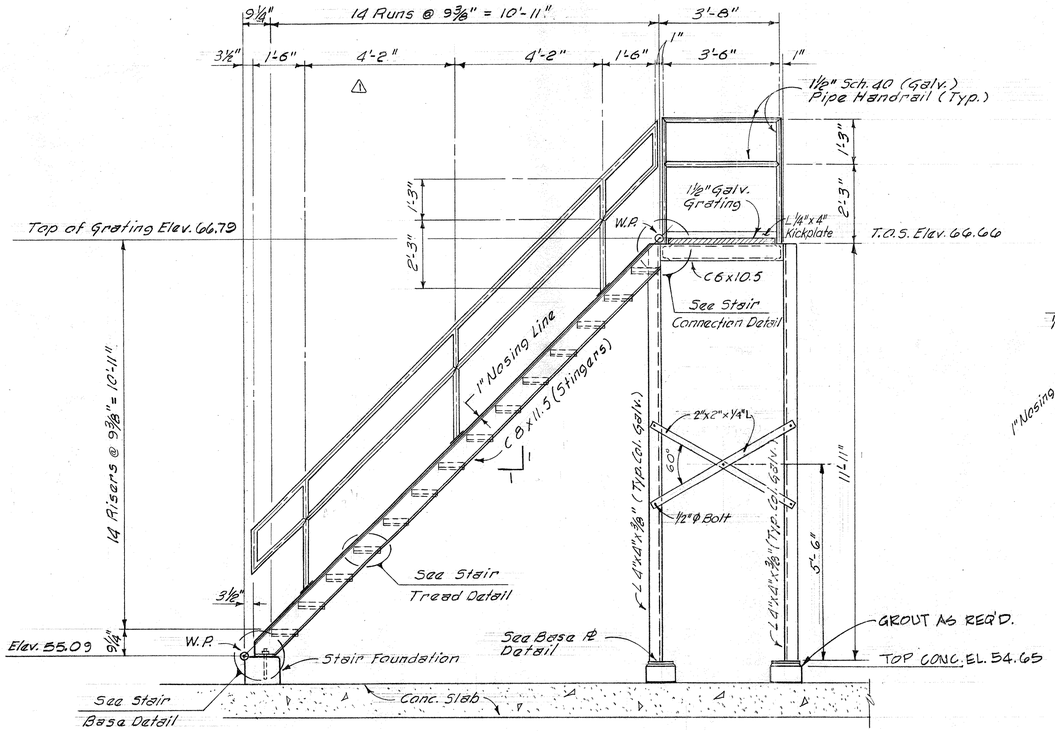

SECTION "H"-"H"

SCALE: ½" = 1'-0"

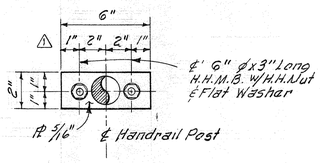

FOR WALKWAY

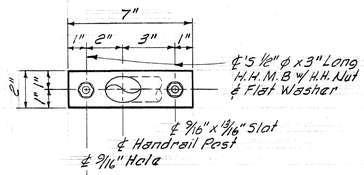

FOR STAIRWAY

HANDRAIL POST BASE PLATE DETAIL

Scale: 3" = 1'-0"

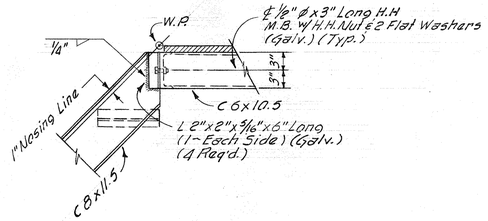

STAIR CONNECTION DETAIL

Scale: 1" = 1'-0"

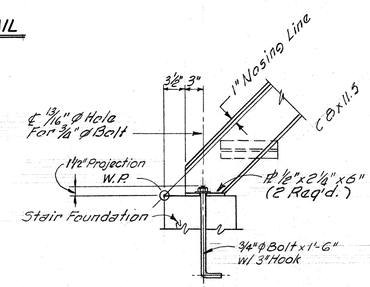

STAIR BASE DETAIL

Scale: 1" = 1'-0"

CITY OF HOUSTON
DEPARTMENT OF PUBLIC WORKS

ALMEDA SIMS
SLUDGE DISPOSAL
PLANT – 1973

FERRIC CHLORIDE STORAGE
STRUCTURAL DETAILS

RECOMMENDED FOR APPROVAL:
BINKLEY & HOLMES, INC., CONSULTING ENGINEERS

APPROVED:
CHIEF ENGINEER — ASST. CHIEF ENGINEER
ASST. DIRECTORS OF PUBLIC WORKS
DIRECTOR OF PUBLIC WORKS

DESIGNED BY: V. Jafri
DRAWN BY: T. YRIGOYEN
CHECKED BY: M. B. J.
SCALE: AS NOTED
DATE: Dec., 1973
SHEET 149 OF 200 SHEETS
DRAWING NO. 18045

REV. NO.	DATE	DESCRIPTION	DESIGN	CHECKED
1	3-77	Rev. Structural Dim	J.C.S.	S.R.S.

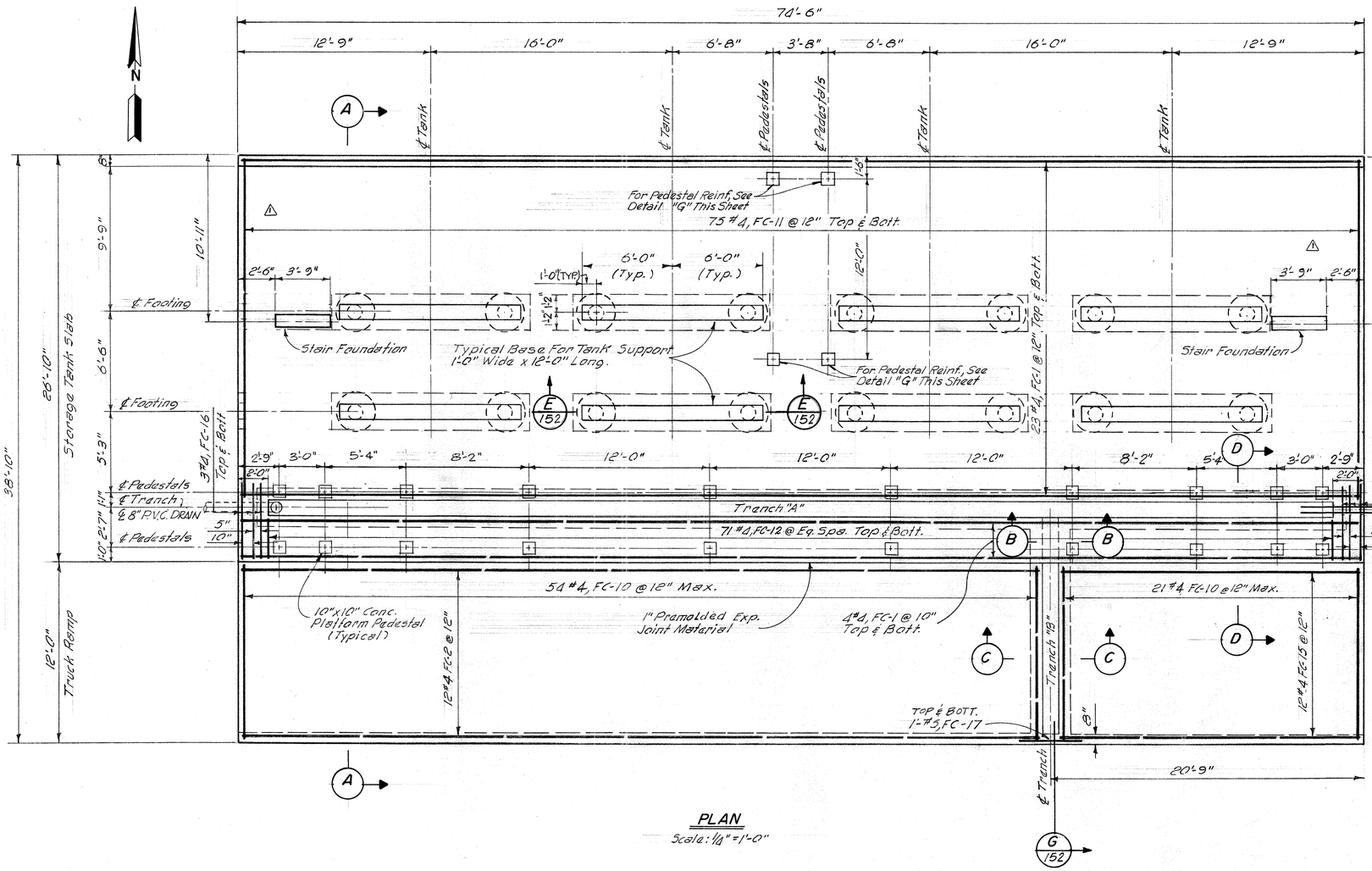

PLAN

Scale: 1/8" = 1'-0"

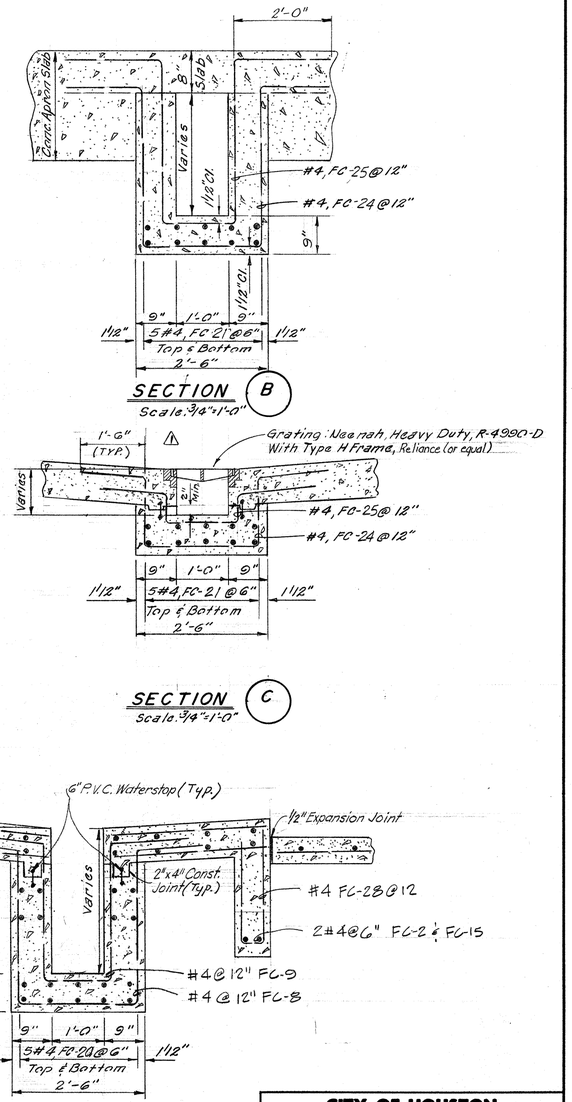

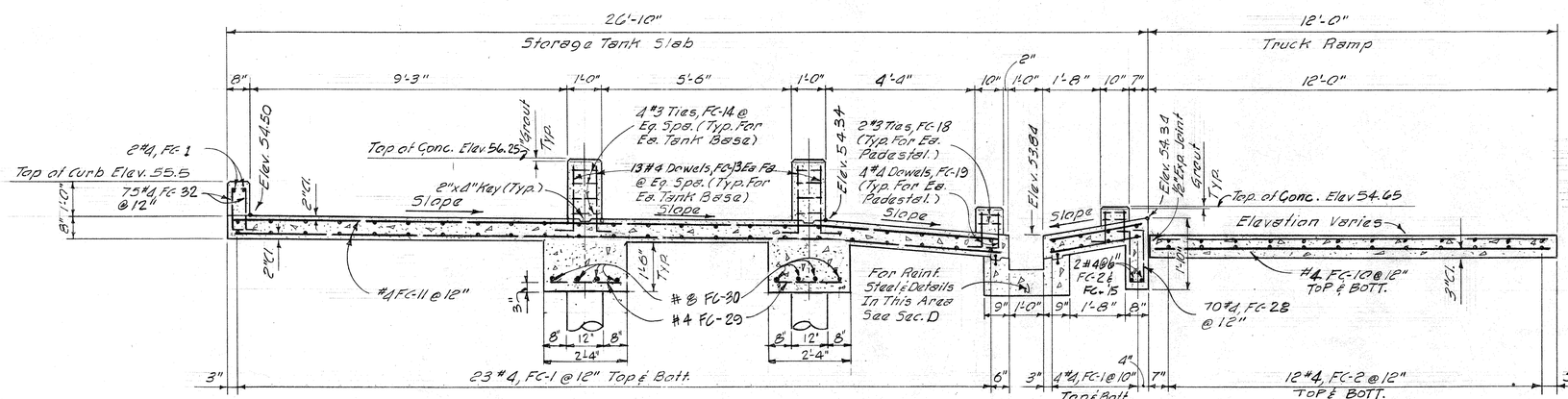

REV. NO.	DATE	DESCRIPTION	DESIGN	CHECKED
1	3-77	Rev. Structural Dim	D. C.	S.R.S.

CITY OF HOUSTON
DEPARTMENT OF PUBLIC WORKS

ALMEDA SIMS SLUDGE DISPOSAL PLANT – 1973

FERRIC CHLORIDE STORAGE FOUNDATION PLAN & SECTIONS

RECOMMENDED FOR APPROVAL:
Paul R. Holmes
BINKLEY & HOLMES, INC., CONSULTING ENGINEERS

APPROVED:
Walter G. Williams
CHIEF ENGINEER — ASST. CHIEF ENGINEER
ASST. DIRECTORS OF PUBLIC WORKS
E. B. Cape
DIRECTOR OF PUBLIC WORKS

DESIGNED BY: V. Tafri
DRAWN BY: T. YRIGOYEN, I. GONZALEZ
CHECKED BY: M.B.J.
SCALE: AS NOTED
DATE: Dec., 1973
SHEET 150 OF 200 SHEETS
DRAWING NO. 18045

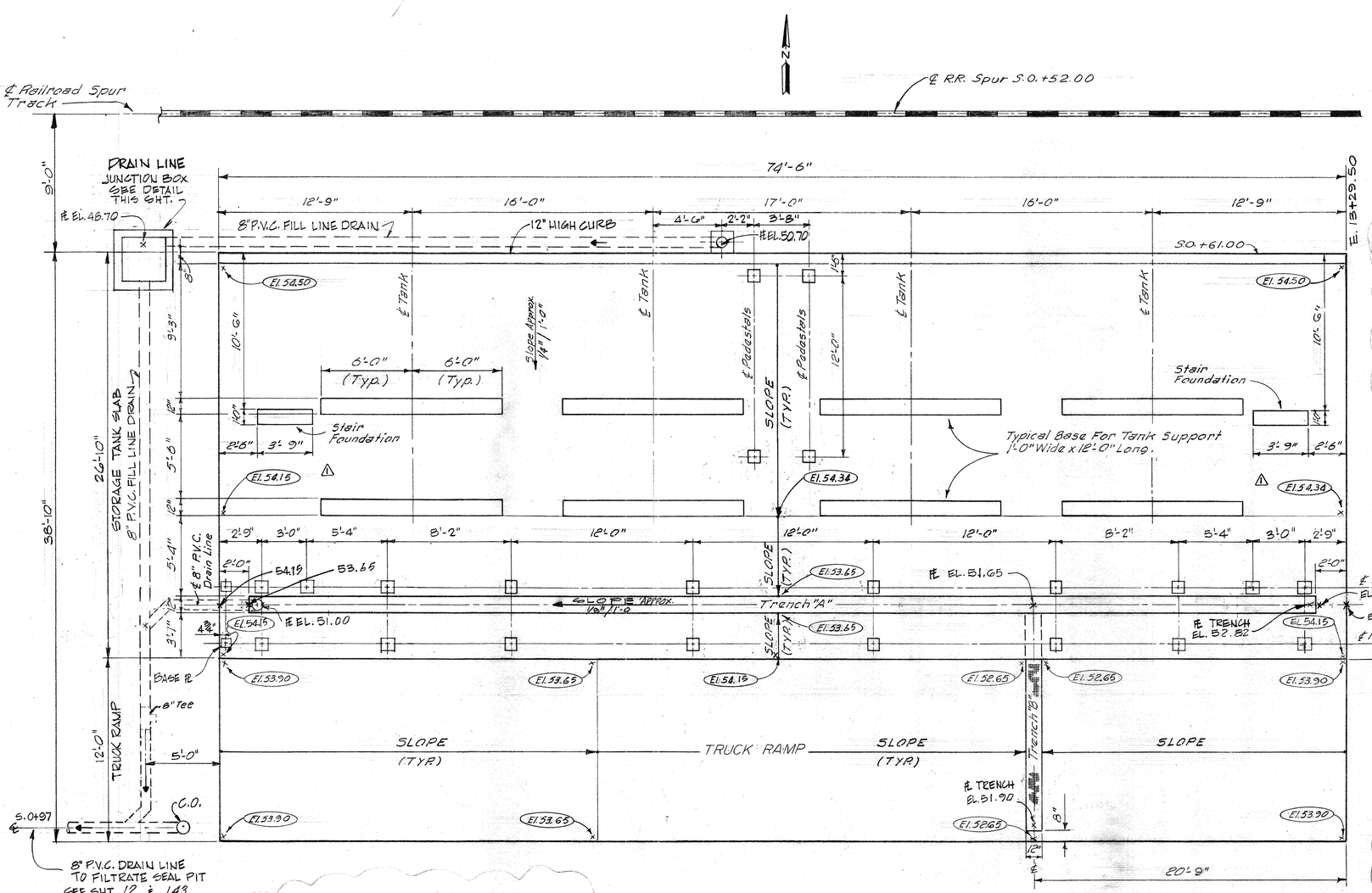

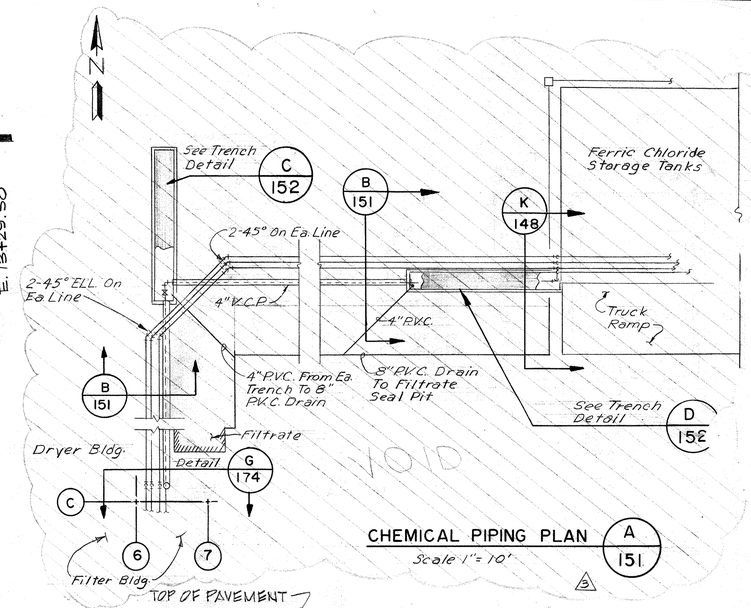

CHEMICAL PIPING PLAN (A 151)

Scale 1" = 10'

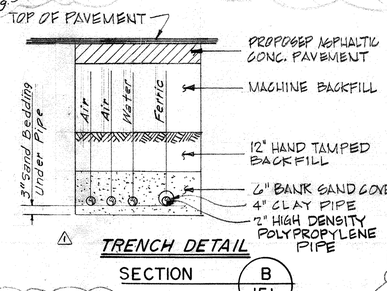

TRENCH DETAIL SECTION (B 151)

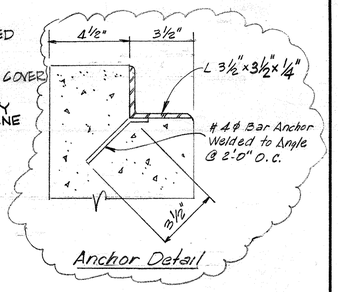

Anchor Detail

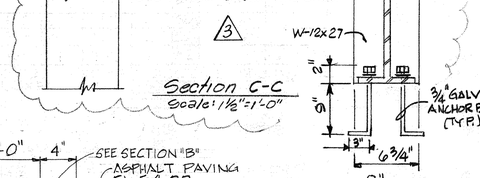

Section C-C

Scale: 1½" = 1'-0"

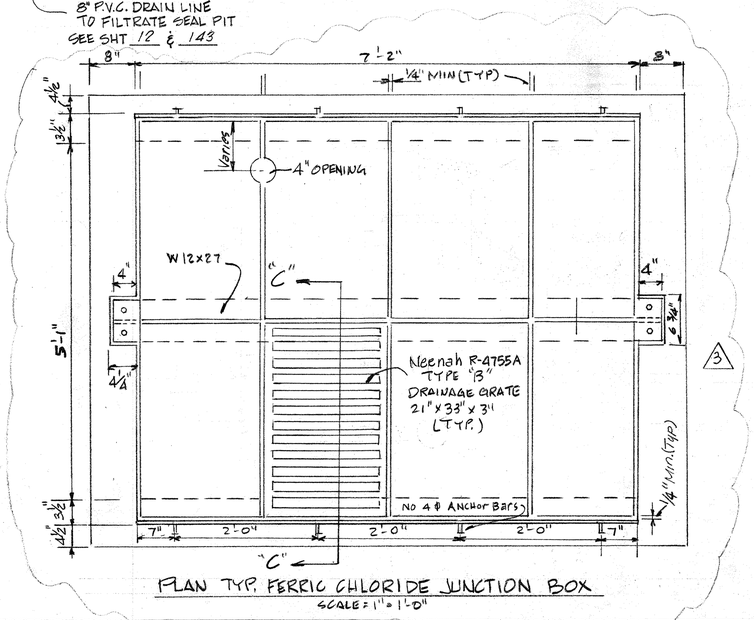

PLAN TYP. FERRIC CHLORIDE JUNCTION BOX

SCALE: 1" = 1'-0"

SLAB PLAN

SCALE ¼" = 1'-0"

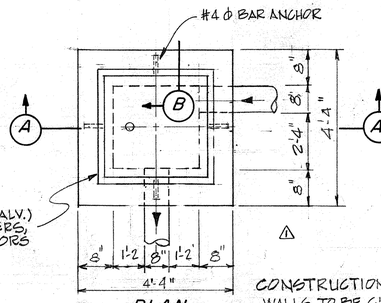

PLAN

NOT TO SCALE

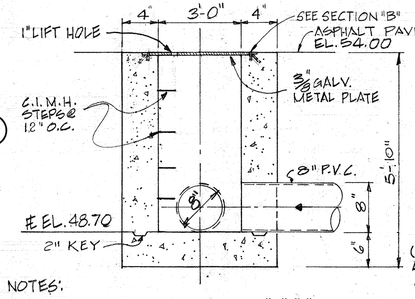

SECTION "A"-"A"

NOT TO SCALE

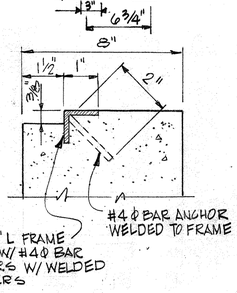

SECTION "B"

NOT TO SCALE

CONSTRUCTION NOTES:

WALLS TO BE 6" CONC. (WALLS TO BE 8" THICK IF CONST. OF BRICK)

LID TO BE ⅛" GALV. METAL PLATE (WHERE TRAFFIC CONDITIONS WARRANT LID SHALL BE ⅜" GALV. METAL PLATE)

NOTE:

NOT TO BE USED IN STREET. FOR AREA BETWEEN CURB AND ℄.

CITY OF HOUSTON STANDARD JUNCTION BOX W/LID, DWG. # S-518

DRAIN LINE JUNCTION BOX DETAILS

REV. NO.	DATE	DESCRIPTION	DESIGN	CHECKED
2	10-79	Const. Revisions Delete Piping Plan. Add Ferric Chloride Junction Box Plan, Section "C-C" & Anchor Detail	W.G.W.	H.J.K.
1	6-77	Add Piping Plan Remove Jun. Box & Sect. A	J.C.S	K.R.L
1	3-77	Rev. Pipe Trench Rev. Elev. & Structural	D.C.	S.R.S.

CITY OF HOUSTON
DEPARTMENT OF PUBLIC WORKS

ALMEDA SIMS SLUDGE DISPOSAL PLANT - 1973

FERRIC CHLORIDE STORAGE PLAN & DETAILS

RECOMMENDED FOR APPROVAL:
BINKLEY & HOLMES, INC., CONSULTING ENGINEERS

APPROVED:
CHIEF ENGINEER — ASST. CHIEF ENGINEER
ASST. DIRECTORS OF PUBLIC WORKS
DIRECTOR OF PUBLIC WORKS

DESIGNED BY: V. Jafri
DRAWN BY: T. YRIGOYEN
CHECKED BY: M.S.T.
SCALE: AS NOTED
DATE: Dec., 1978
SHEET 151 OF 200 SHEETS
DRAWING NO. 18045

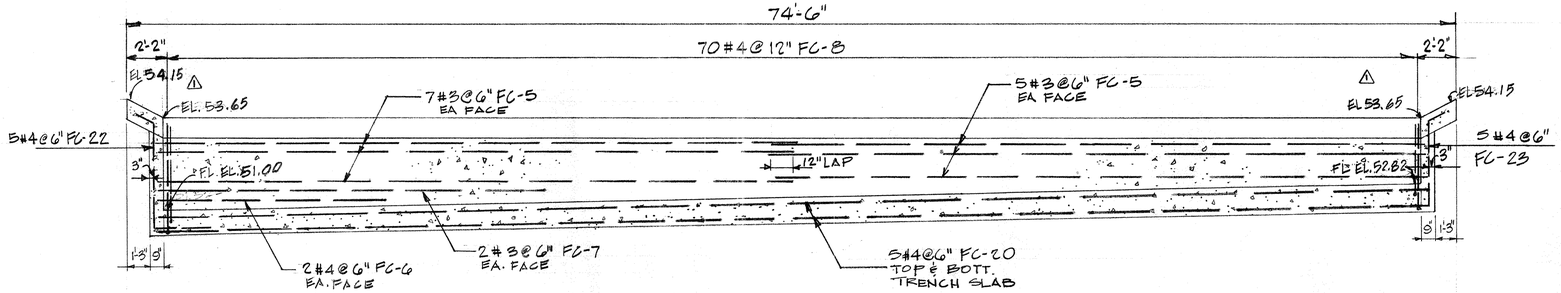

SECTION F1 / 152 NORTH WALL TRENCH "A"

SCALE: HORIZ. ¼"=1'-0"
VERT. ½"=1'-0"

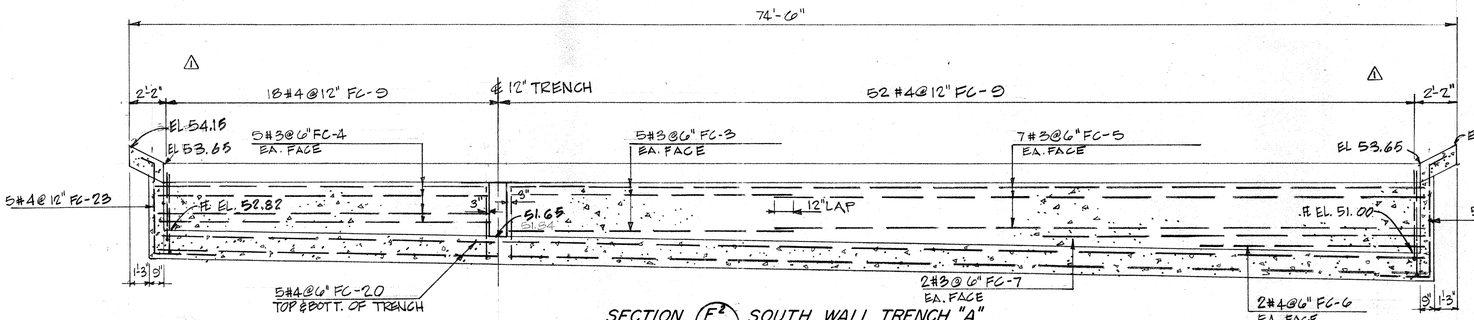

SECTION F2 / 152 SOUTH WALL TRENCH "A"

SCALE: HORIZ. ¼"=1'-0"
VERT. ½"=1'-0"

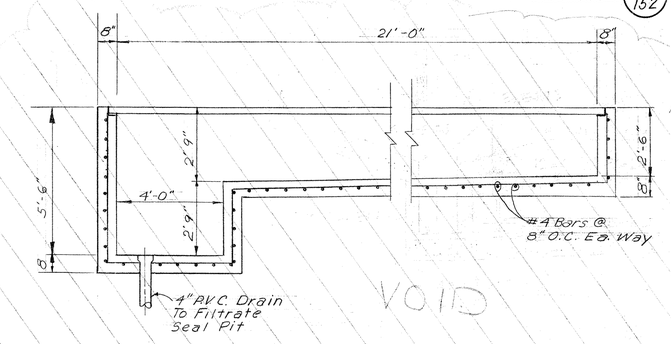

TRENCH DETAIL C / 152

NOTE

Typical Cover For Trench "C" & "D" Shall Be - NEENAH R-4999-KF Type L Frame W/Bolted Down Type D Cover 21'-4" Lg. OR FLOCKHART Type 6 72 W/Bolted Down Cover Or Approved Equal.

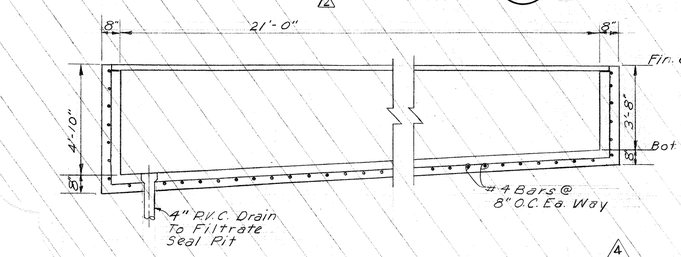

TRENCH DETAIL D / 152

Scale 3/8"=1'-0"

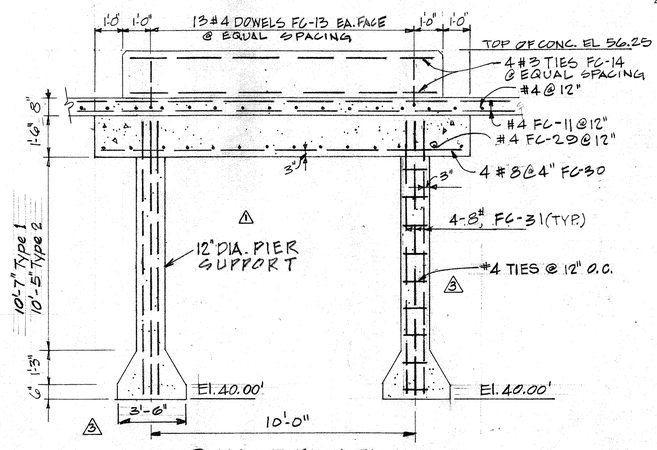

TYPICAL AT EACH TANK

SECTION E / 152

SCALE: 3/8"=1'-0"

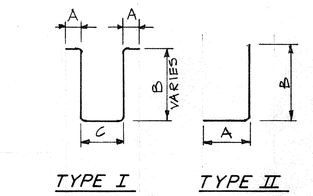

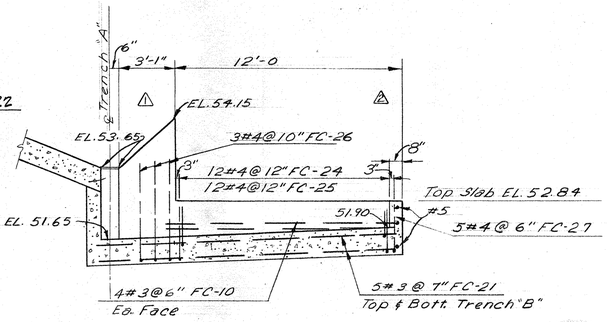

SECTION G / 152 TRENCH "B"

Scale: Horiz. ¼"=1'-0"
Vert. ½"=1'-0"

REINFORCING SCHEDULE FOR FERRIC CHLORIDE TANK SLAB & TRUCK SLAB

MARK	TYPE	SPACING	TOTAL REQ'D	SIZE	TOTAL LENGTH PER BAR	BENT BAR DIMENSIONS A	B	C
FC-1	STR	12"	56	#4	*75'-0"			
FC-2	STR	12"	26	#4	*48'-1½"			
FC-3	STR	6"	10	#3	*12'-6"			
FC-4	STR	6"	10	#3	18'-6"			
FC-5	STR	6"	34	#3	40'-0"			
FC-6	STR	6"	4	#8	14'-0"			
FC-7	STR	6"	4	#3	28'-0"			
FC-8	I	12"	70	#4	VARIES	1'-0"	VARIES	2'-0"
FC-9	I	12"	70	#4	VARIES	1'-0"	VARIES	1'-6"
FC-10	STR	12"	150	#4	11'-6"			
FC-11	STR	12"	150	#4	22'-6"			
FC-12	STR	AS SHOWN	140	#4	2'-7"			
FC-13	II	EQUAL SPACING	208	#4	2'-8"	8"	1'-10"	
FC-14	IV	AS SHOWN	32	#4	12'-8"	8"	11'-6"	3"
FC-15	STR	12"	26	#4	19'-9"			
FC-16	STR	AS SHOWN	12	#4	5'-0"			
FC-17	STR	AS SHOWN	2	#5	4'-0"			
FC-18	IV	AS SHOWN	56	#3	11'-7"	8"	8"	3"
FC-19	II	AS SHOWN	112	#4	1'-6"	6"	1'-0"	
FC-20	STR	6"	10	#4	*75'-0"			
FC-21	STR	6"	10	#4	16'-0"			
FC-22	III	12"	5	#4	9'-0"	1'-0"	6'-0"	2'-0"
FC-23	III	12"	5	#4	7'-6"	1'-0"	4'-6"	2'-0"
FC-24	I	12"	12	#4	VARIES	1'-0"	VARIES	2'-0"
FC-25	I	12"	12	#4	VARIES	1'-0"	VARIES	1'-6"
FC-26	I	AS SHOWN	3	#4	VARIES	1'-0"	VARIES	2'-0"
FC-27	II	AS SHOWN	5	#4	2'-0"	1'-0"	1'-0"	
FC-28	V	12"	70	#4	4'-5"	5"	2'-0"	
FC-29	STR	12	102	#4	1'-9			
FC-30	STR	4"	40	#8	13'-6"			
FC-31	STR	AS SHOWN	64	#8	11'-0"			
FC-32	II	12"	150	#4		4'-11"	1'-3"	
FC-33	II	AS SHOWN	16	#4	1'-5"	6"	1'-1"	
FC-34	IV	AS SHOWN	4	#3	8'-6"	8"	3'-4"	3"

REV. NO.	DATE	DESCRIPTION	DESIGN	CHECKED
4	10-79	Construction Revisions Delete Details "C" & "D"	W.G.W.	H.J.K.
3	6-78	Foundation Revisions	H.J.K.	K.R.L.
2	6-77	Add Trench Details Relocated Sect G	J.C.S.	K.R.L.
1	5-77	Rev. Elevations	J.C.S.	S.R.S.

CITY OF HOUSTON
DEPARTMENT OF PUBLIC WORKS

ALMEDA SIMS SLUDGE DISPOSAL PLANT - 1973

FERRIC CHLORIDE STORAGE

SECTIONS & DETAILS

RECOMMENDED FOR APPROVAL:
BINKLEY & HOLMES, INC., CONSULTING ENGINEERS

APPROVED:
CHIEF ENGINEER — ASST. CHIEF ENGINEER
ASST. DIRECTORS OF PUBLIC WORKS
DIRECTOR OF PUBLIC WORKS

DESIGNED BY: V. Tafri
DRAWN BY: M. MUNIZ
CHECKED BY: M.B.J.
SCALE: AS NOTED
DATE: Dec., 1973
SHEET 152 OF 200 SHEETS
DRAWING NO. 18045

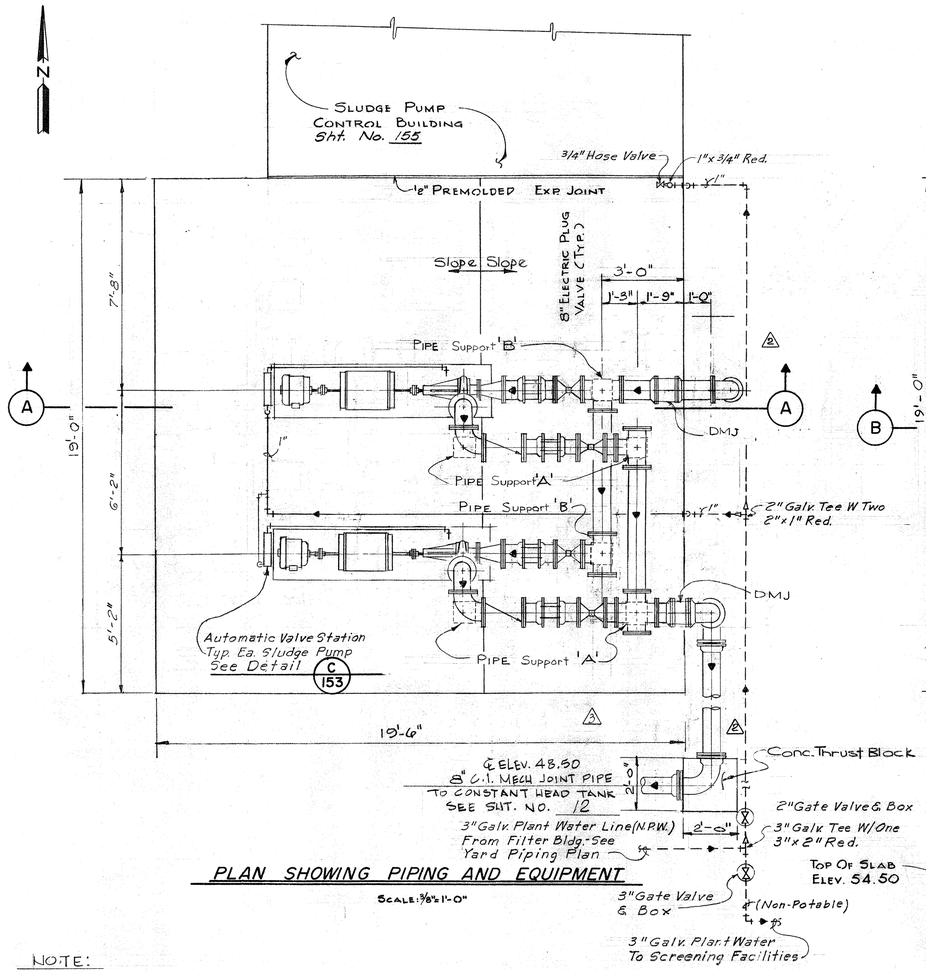

PLAN SHOWING PIPING AND EQUIPMENT

SCALE: 3/8"=1'-0"

NOTE:

SIZE AND HEIGHT OF PUMP & MOTOR PADS TO BE VARIFIED BY PUMP MANUFACTURE

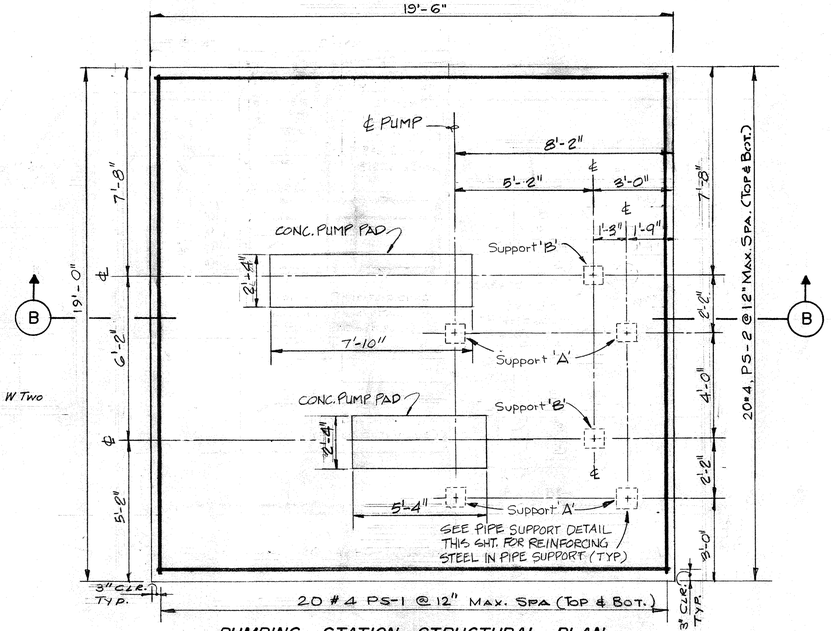

PUMPING STATION STRUCTURAL PLAN

SCALE: 3/8"=1'-0"

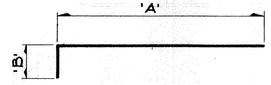

TYPE—"1"

BENT BAR DETAIL

See Schedule For Dimensions

REINFORCING STEEL SCHEDULE

FOR SLUDGE PUMPING FACILITY

MARK	TYPE	SIZE	NO. REQ'D.	LENGTH PER BAR	BENT BAR DIM. 'A'	'B'
PS-1	Str.	#4	44	18'-11"		
PS-2	Str.	#4	44	19'-2"		
PS-3	Str.	#3	10	5'-8		
PS-4	Str.	#3	8	3'-0"		
PS-5	Str.	#3	6	7'-8"		
PS-6	Str.	#3	6	3'-7"		
PS-7	1	#4	8	6'-8"	5'-11"	0'-9"
PS-8	1	#4	8	3'-2"	2'-5"	0'-9"
PS-9	1	#4	8	2'-9"	2'-0"	0'-9"
PS-10	Spiral	#3	2	28'-0"		
PS-11	Spiral	#3	2	12'-0"		
PS-12	Spiral	#3	2	11'-0"		

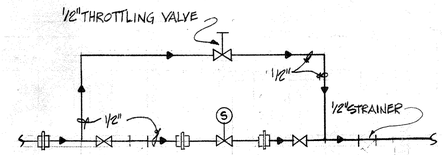

DETAIL C 153 N.T.S.

(AUTOMATIC VALVE STATION (AVS))

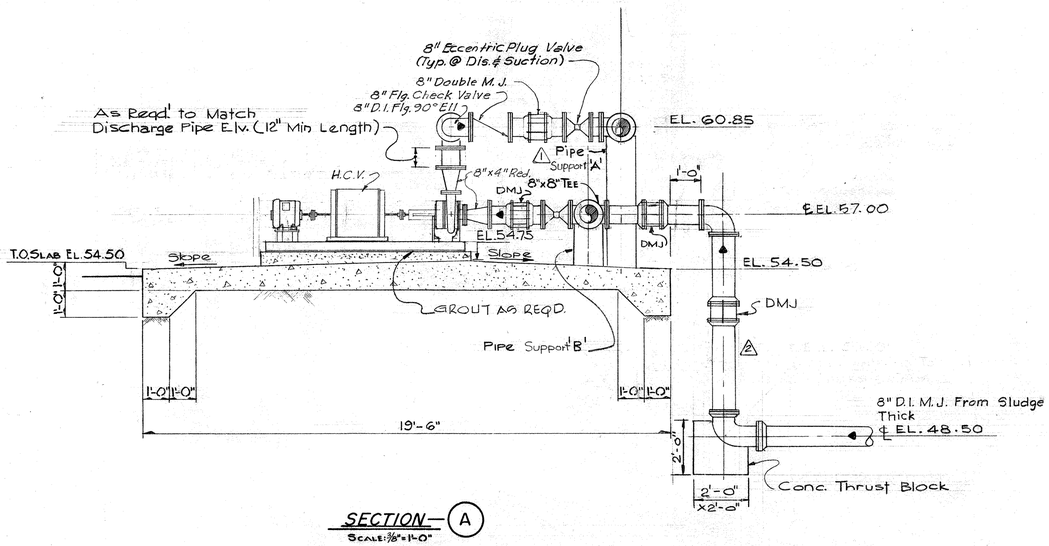

SECTION—(A)

SCALE: 3/8"=1'-0"

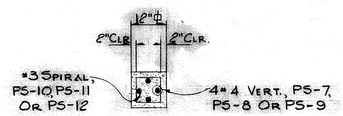

PLAN

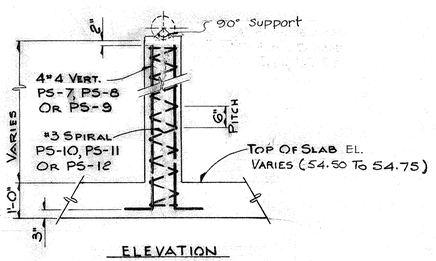

ELEVATION

PIPE SUPPORT DETAIL

SCALE: 1"=1'-0"

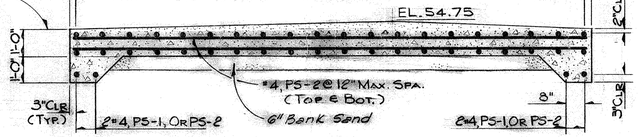

SECTION—(B)

SCALE: 3/8"=1'-0"

REV. NO.	DATE	DESCRIPTION	DESIGN	CHECKED
4	11-78	Permit Revision	H.J.K.	K.R.L.
3	6-77	Change Pipe Base To Pipe Support	J.C.S.	K.R.L.
2	2-77	Telescopic Pit deleted & Sludge Line Changed 10"to8"	J.C.S.	S.R.S.
1	4-76	REVISED CHECK VALVE LOCATION	J. J.	D.R.Y.

CITY OF HOUSTON
DEPARTMENT OF PUBLIC WORKS

ALMEDA SIMS
SLUDGE DISPOSAL
PLANT — 1973

THICKENER
SLUDGE PUMPING FACILITY
PLANS & SECTIONS

RECOMMENDED FOR APPROVAL:
BINKLEY & HOLMES, INC., CONSULTING ENGINEERS

APPROVED:
CHIEF ENGINEER — ASST. CHIEF ENGINEER
ASST. DIRECTORS OF PUBLIC WORKS
DIRECTOR OF PUBLIC WORKS

DESIGNED BY: V. Jafri
DRAWN BY: V Jafri
CHECKED BY: M.G.T. & S.R.S.
SCALE: As Shown
DATE: Dec., 1973
SHEET: 153 OF 200 SHEETS
DRAWING NO. 18045

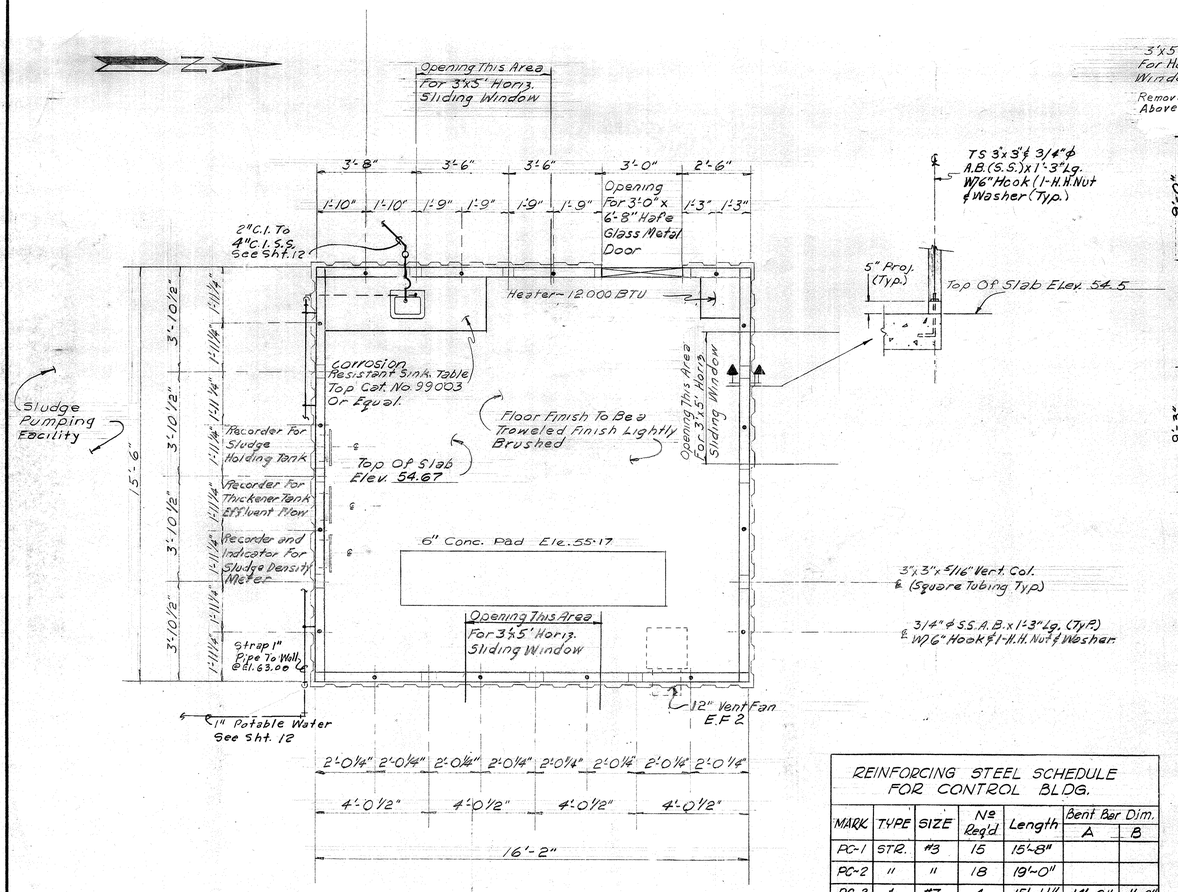

FLOOR PLAN

Scale: 3/8"=1'-0"

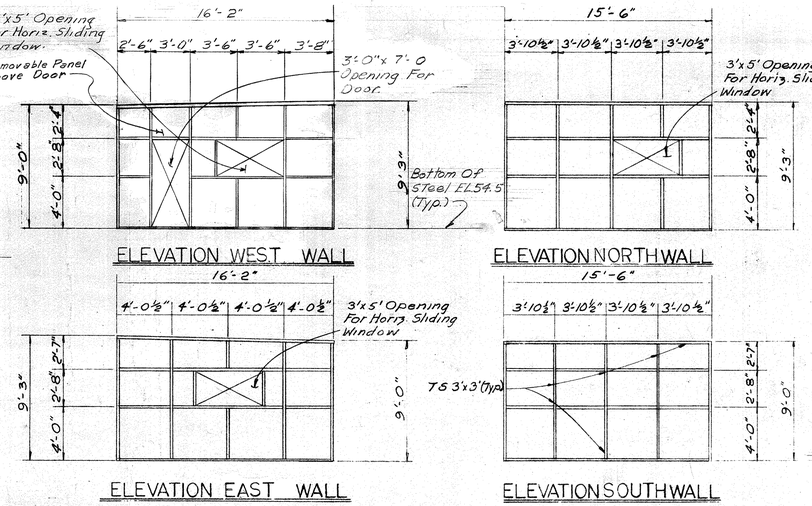

WALL FRAMING DETAILS

Scale: 3/16"=1'-0"

NOTES:

1. All siding to be Rib Type Insulated Stl. Siding.
2. All roofing to be ¾" Ext. Plywood-Gr. AA.
3. For schematic & wiring of Recording & Instruments shown, See Sht. 178
4. All joints to be AISC std. connections.

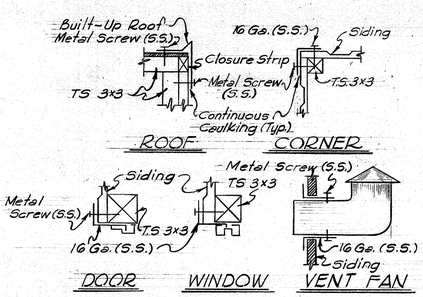

WEATHER TIGHT FLASHING DETAIL

N.T.S.

REINFORCING STEEL SCHEDULE FOR CONTROL BLDG.						
MARK	TYPE	SIZE	No Req'd	Length	Bent Bar Dim. A	Bent Bar Dim. B
PC-1	STR.	#3	15	15'-8"		
PC-2	"	"	18	19'-0"		
PC-3	1	#7	4	15'-11"	14'-8"	1'-3"
PC-4	"	"	6	16'-11"	15'-8"	1'-3"
PC-5	"	"	4	20'-3"	19'-0"	1'-3"
PC-6	"	"	4	19'-3"	18'-0"	1'-3"
PC-7	2	#3	66	3'-8"	6"	1'-0"

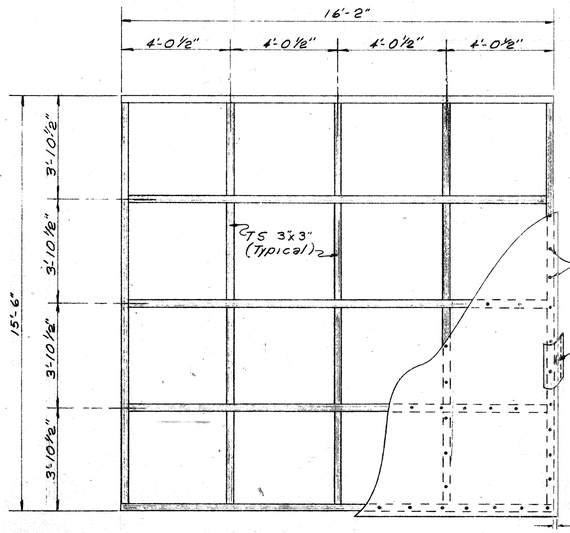

ROOF PLAN

Scale: 3/8"=1'-0"

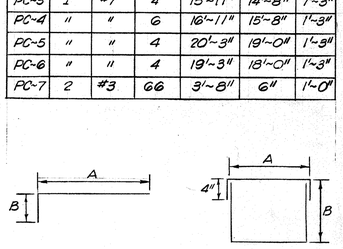

BENT BAR DETAIL

N.T.S.

3"x3"x 5/16" Vert. Col. & (Square Tubing Typ.)

3/4"ϕ S.S. A.B. x 1'-3" Lg. (Typ.) & W/6" Hook & 1-H.H. Nut & Washer

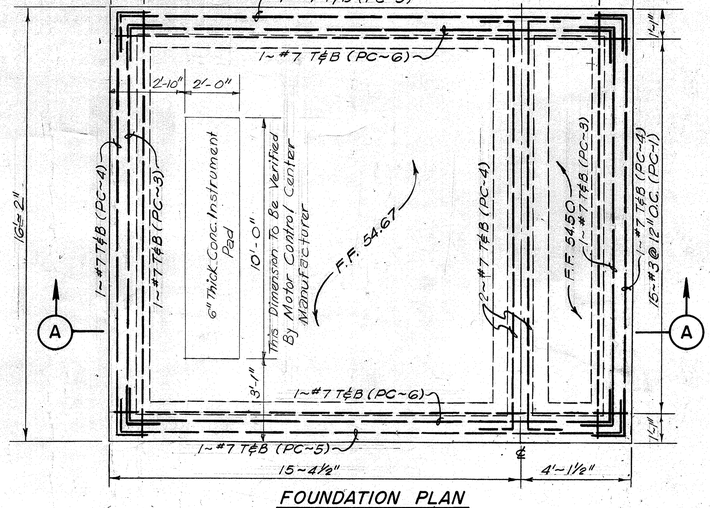

FOUNDATION PLAN

SCALE: 3/4"=1'-0"

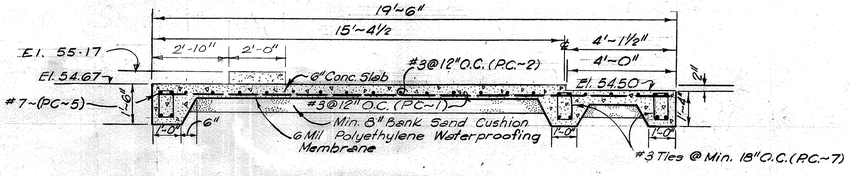

SECTION "A"

SCALE: 3/4"=1'-0"

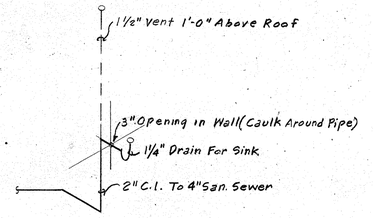

RISER DIAGRAM

JAMES A. BINKLEY — REGISTERED PROFESSIONAL ENGINEER — STATE OF TEXAS

PAUL R. HOLMES — 27639 — REGISTERED PROFESSIONAL ENGINEER — STATE OF TEXAS

CITY OF HOUSTON
DEPARTMENT OF PUBLIC WORKS

ALMEDA SIMS SLUDGE DISPOSAL PLANT-1973

SLUDGE PUMPING FACILITY
CONTROL BUILDING

RECOMMENDED FOR APPROVAL:
BINKLEY & HOLMES, INC., CONSULTING ENGINEERS

APPROVED:
CHIEF ENGINEER — ASST. CHIEF ENGINEER
ASST. DIRECTORS OF PUBLIC WORKS
DIRECTOR OF PUBLIC WORKS

DESIGNED BY: V. Jafri
DRAWN BY: K. Covington
CHECKED BY: M. B. J.
SCALE: As Shown
DATE: Dec., 1973
SHEET 155 OF 200 SHEETS
DRAWING NO. 18045

REV. NO.	DATE	DESCRIPTION	DESIGN	CHECKED
2	11-78	Permit Revision	H.J.K.	K.R.L.
1	3-77	General Modifications	JCS	SRS

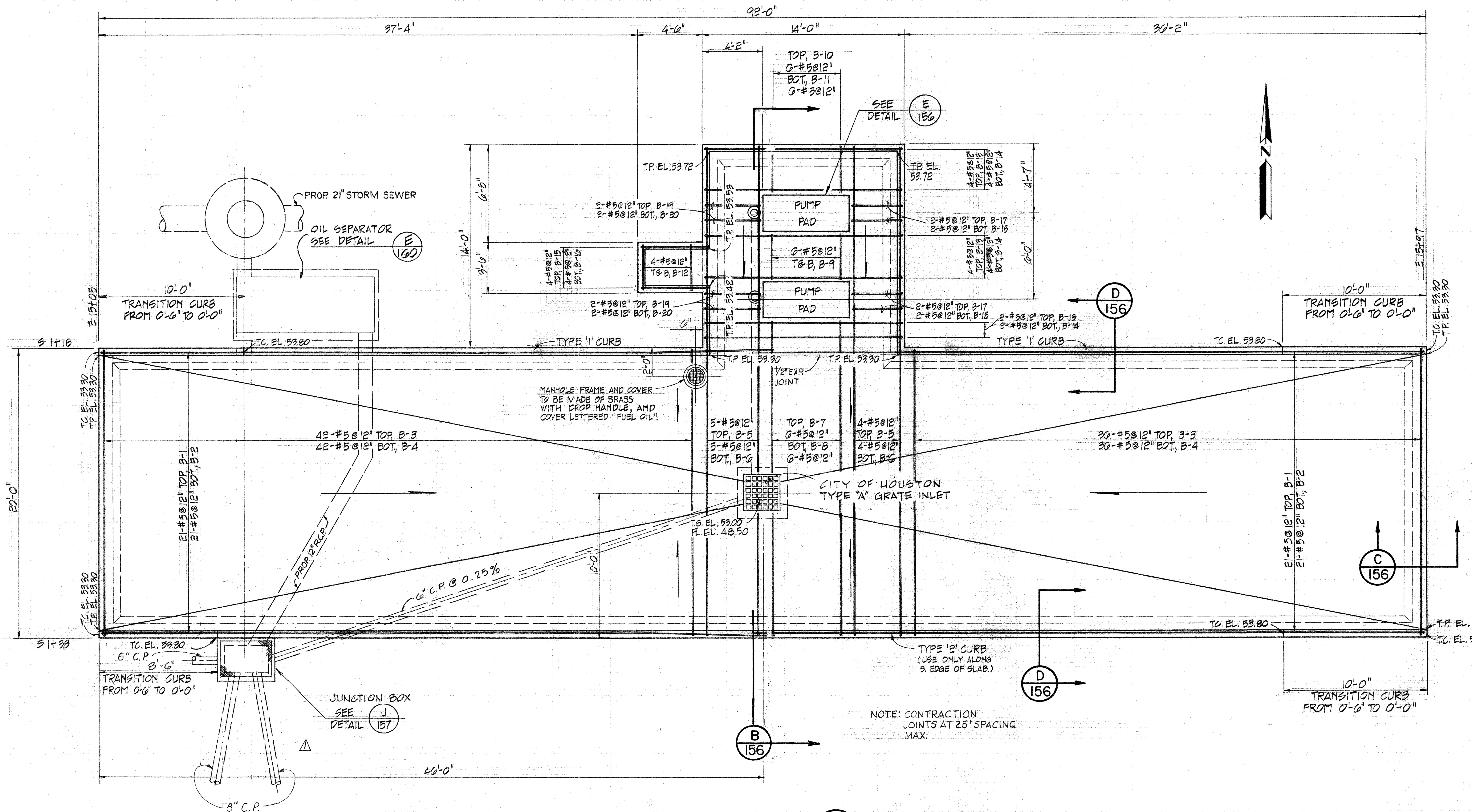

PLAN (A/156)
SCALE: 1/4"=1'-0"

MARK	TYPE	SPACING	TOTAL REQ'D.	SIZE	TOTAL LENGTH PER BAR	BENT BAR DIMENSIONS A	B	C	D
B-1	I	12"	42	#5	47'-4"	46'-6"	10"		
B-2	STR	12"	42	#5	44'-9"				
B-3	II	12"	78	#5	21'-2"	19'-6"	10"		
B-4	STR	12"	78	#5	17'-6"				
B-5	II	12"	9	#5	35'-2"	33'-6"	10"		
B-6	STR	12"	9	#5	31'-6"				
B-7	I	12"	6	#5	22'-7"	21'-9"	10"		
B-8	STR	12"	6	#5	20'-9"				
B-9	STR	12"	12	#5	3'-2"				
B-10	I	12"	6	#5	3'-10"	3'-0"	10"		
B-11	STR	12"	6	#5	2'-0"				
B-12	STR	12"	8	#5	3'-2"				
B-13	II	12"	10	#5	15'-2"	13'-6"	10"		
B-14	STR	12"	10	#5	11'-6"				
B-15	I	12"	4	#5	5'-6"	4'-8"	10"		
B-16	I	12"	4	#5	5'-2"	4'-7"	7"		
B-17	I	12"	4	#5	4'-3"	3'-5"	10"		
B-18	STR	12"	4	#5	2'-4"				
B-19	I	12"	4	#5	4'-6"	3'-8"	10"		
B-20	STR	12"	4	#5	2'-8"				
B-21	STR	AS SHOWN	—	#4	AS REQ'D.				
B-22	II	10"	8	#5	8'-6"	5'-6"	1'-6"		
B-23	STR	12"	14	#5	2'-7"				
B-24	III	24"	134	#5	3'-7"	1'-6"	9"	8"	8"

REINFORCING STEEL SCHEDULE

NOTE:
MIN. LAP SPLICE TO BE 18" OR AS SHOWN.

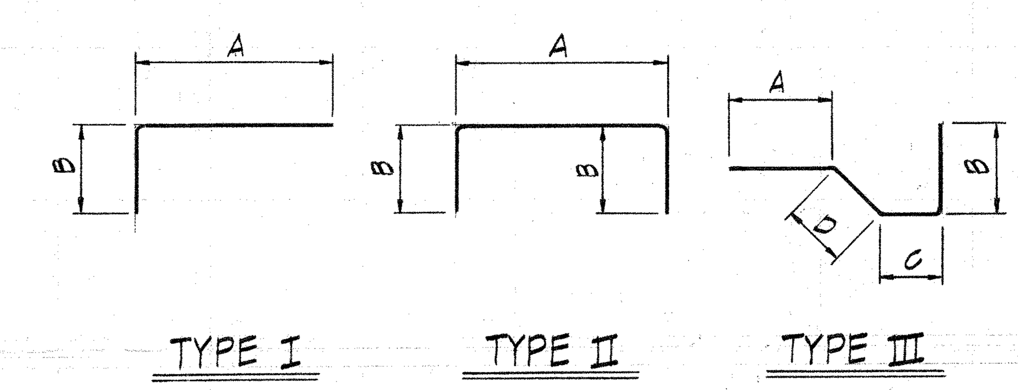

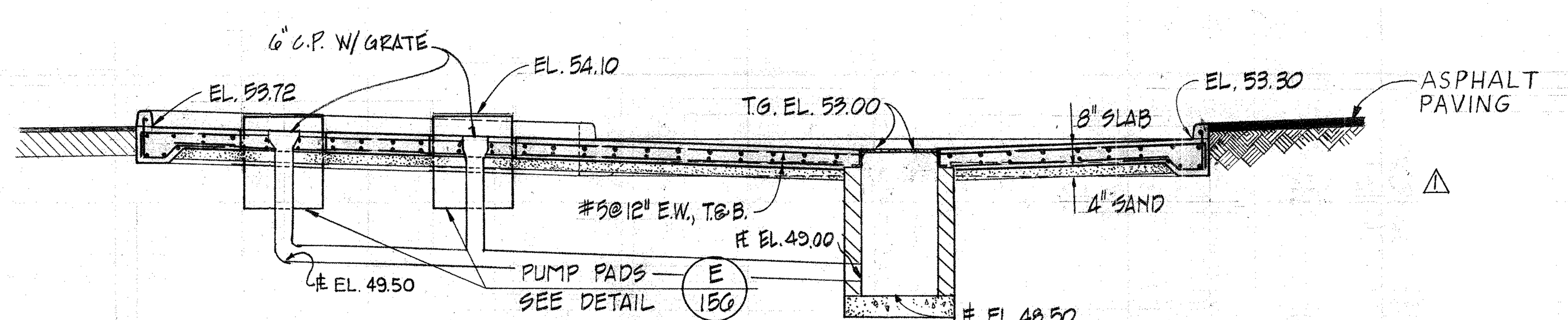

SECTION (B/156)
SCALE: 1/4"=1'-0"

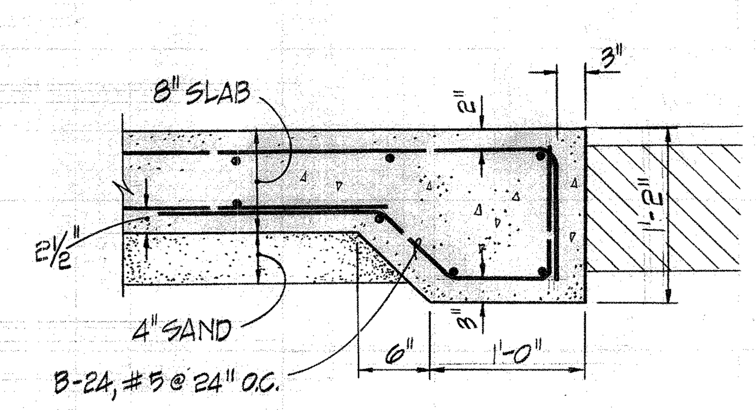

TYPICAL FOOTING SECTION (C/156)
SCALE: 1"=1'-0"

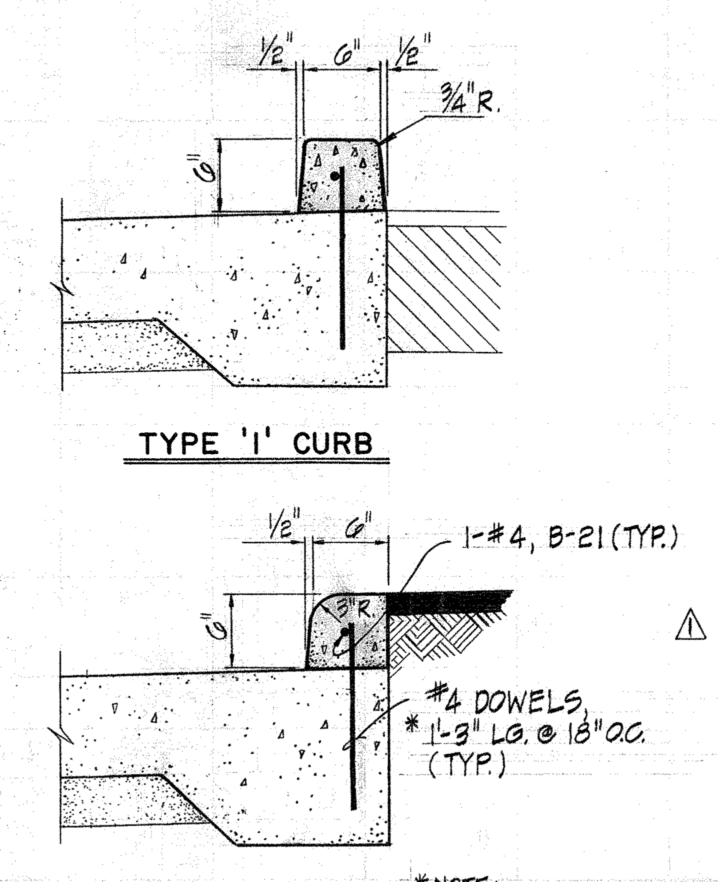

TYPE '1' CURB

TYPE '2' CURB

*NOTE: DOWEL LENGTH TO BE 10" WHERE NO FOOTING IS SHOWN BELOW CURB.

CURB SECTIONS (D/156)
SCALE: 1"=1'-0"

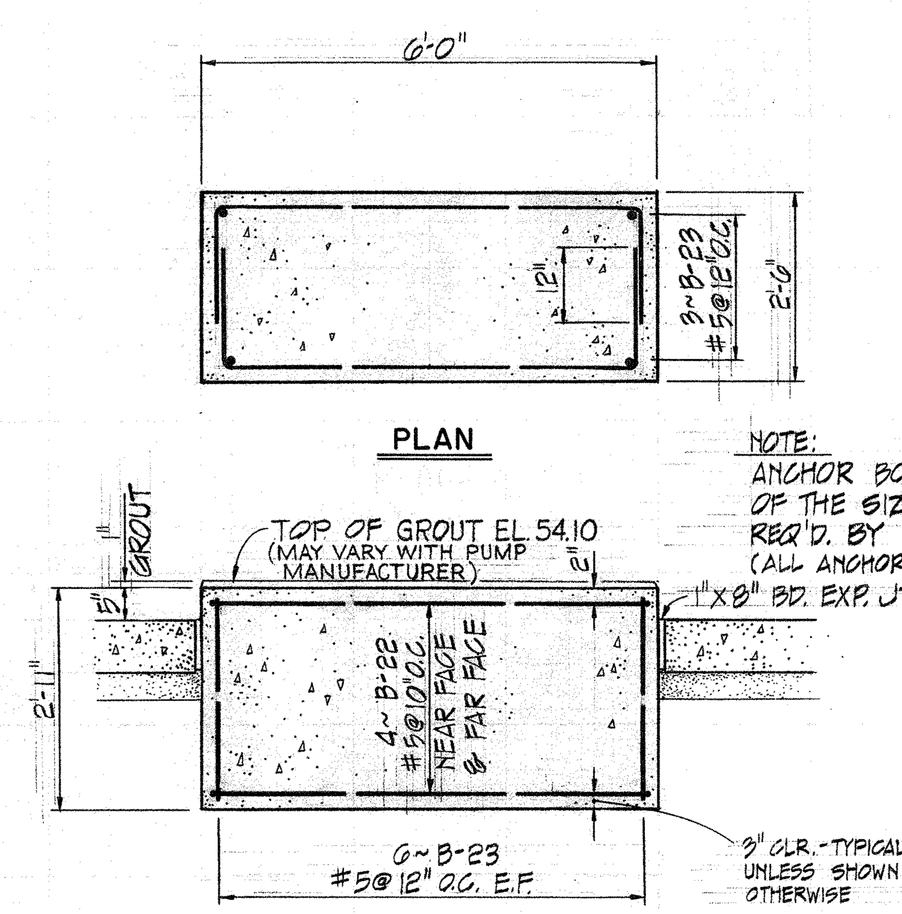

NOTE:
ANCHOR BOLTS TO BE OF THE SIZE AND NUMBER REQ'D. BY PUMP MANUFACTURER. (ALL ANCHOR BOLTS TO BE SLEEVED.)

PUMP PAD (E/156)
(2-REQ'D.)
SCALE: 1/2"=1'-0"

REV. NO.	DATE	DESCRIPTION	DESIGN	CHECKED
△	6-77	General Rev.	J.C.S.	K.R.L.

H. R. EICHELBERGER 34665 REGISTERED PROFESSIONAL ENGINEER
PAUL R. HOLMES 27638 REGISTERED PROFESSIONAL ENGINEER

CITY OF HOUSTON
DEPARTMENT OF PUBLIC WORKS

ALMEDA - SIMS SLUDGE DISPOSAL PLANT - 1973

FUEL OIL UNLOADING FACILITIES

RECOMMENDED FOR APPROVAL:
Paul R. Holmes
BINKLEY & HOLMES, INC., CONSULTING ENGINEERS

APPROVED:
Walter Williams
CHIEF ENGINEER — ASST. CHIEF ENGINEER
ASST. DIRECTORS OF PUBLIC WORKS
E B Cape
DIRECTOR OF PUBLIC WORKS

DESIGNED BY: H.R.E.
DRAWN BY: R. MARGELL
CHECKED BY: H.R.E., D.R.Y.
SCALE: AS SHOWN
DATE: SEPTEMBER, 1975
SHEET 156 OF 200 SHEETS
DRAWING NO. 18045

130

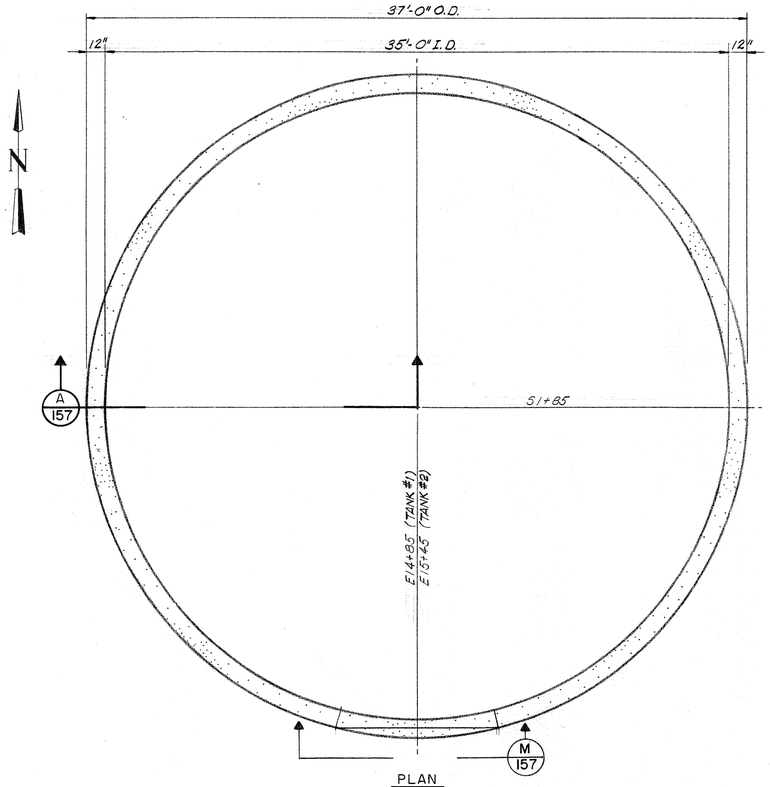

PLAN

SCALE: 1/4"=1'-0"

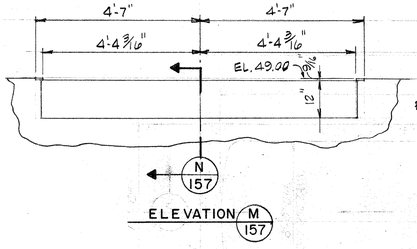

ELEVATION M 157

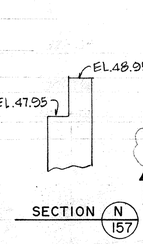

SECTION N 157

FLUSH TYPE CLEAN-OUT FITTING SUPPORT P 157

SCALE: 1/2"=1'-0"

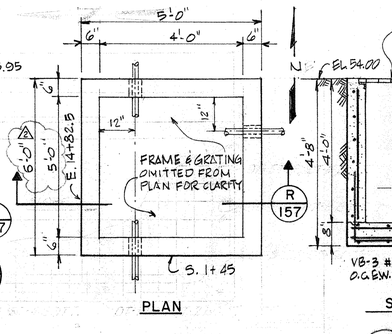

PLAN

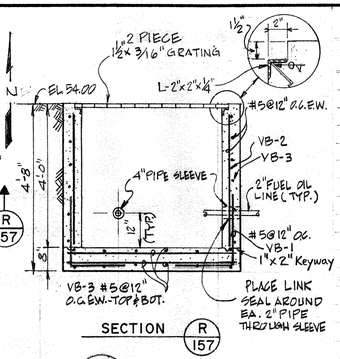

SECTION R 157

REV. NO.	DATE	DESCRIPTION	DESIGN	CHECKED
1	6-77	Rev. Junction Box	J.C.S.	K.R.L.
2	8-79	Revised Valve Box	W.G.W.	H.J.K.

REINFORCING STEEL SCHEDULE

STORAGE TANK RING FOUNDATION

MARK	TYPE	SIZE	NO. REQ'D.	LENGTH PER BAR	BENT BAR DIMENSIONS A	B	C
RT-1	1	#5	30	23'-9"	3'-10"	22'-0"	-
RT-2	1	#5	30	24'-8"	4'-0"	22'-10"	-
RT-3	6	#4	77	10'-0"	4'-8"	8"	-

RAIL ROAD TANK CAR UNLOADING STATION

US-1	7	#5	4	4'-6"	3'-2"	8"	-
US-2	1/2 TR.	#5	4	3'-4"		-	-
US-3	2	#5	8	1'-5"	9"	8"	-
US-4	5	#5	8	6"	5"	-	-

PIPE SLEEPER

PS-1	STR.	#5	17	2'-8"		-	-
PS-2	4	#5	4	4'-10"	3'-8"	1'-2"	-

JUNCTION BOX

JB-1	4	#5	14	3'-0"	2'-0"	1'-0"	-
JB-2	STR.	#5	14	6'-9"			
JB-3	STR.	#5	14	3'-8"			
JB-4	STR.	#5	28	2'-8"			

RETAINING WALL

RW-1	STR.	#5	9	65'-8"	-	-	-
RW-2	STR.	#5	66	2'-8"	-	-	-
RW-3	4	#5	33	4'-4"	3'-2"	1'-2"	-

VALVE BOX

VB-1	4	#5	20	3'-0"	2'-0"	1'-0"	-
VB-2	STR.	#5	20	5'-1"	-	-	-
VB-3	STR.	#5	36	4'-8"	-	-	-

OIL SEPARATOR SLAB

OS-1	STR	#8	20	4'-8"	-	-	-

VALVE BOX Q 157

SCALE: 1/2"=1'-0"

FOR PIPING SEE DETAIL C 159

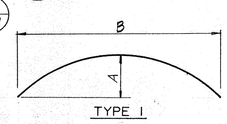

TYPE 1

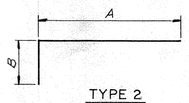

TYPE 2

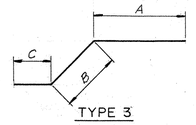

TYPE 3

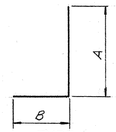

TYPE 4

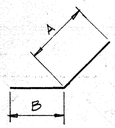

TYPE 5

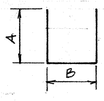

TYPE 6

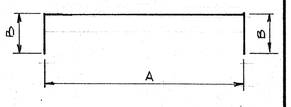

TYPE 7

BENT BAR DETAILS

(SEE SCHEDULE FOR DIMENSIONS)

NOTES:
1. REMOVE TOP TWO FEET OF EXIST. SOIL. REPLACE WITH SELECT FILL AND RECOMPACT TO 95% STANDARD PROCTOR DENSITY.
2. ALL EXPOSED CONCRETE TO BE CHAMFERED 3/4"

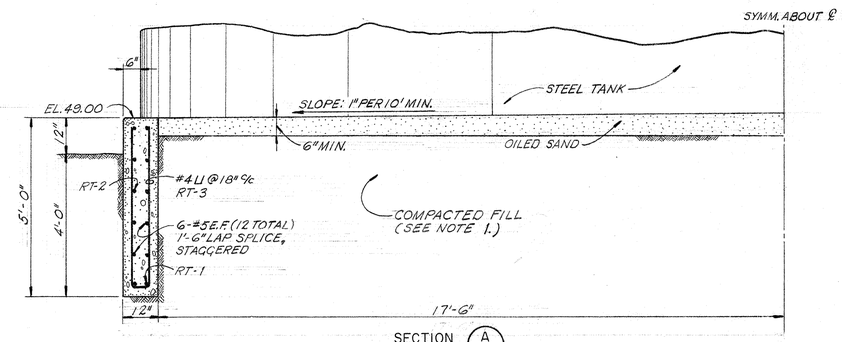

SECTION A 157

SCALE: 1/2"=1'-0"

STORAGE TANK RING FOUNDATION B 157

(2-REQ'D.)

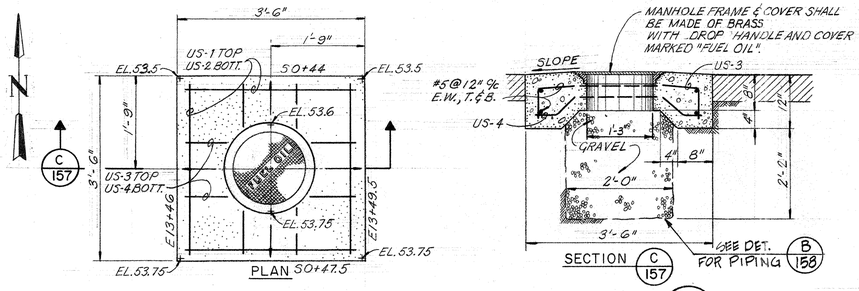

RAILROAD TANK CAR UNLOADING STATION D 157

SCALE: 3/4"=1'-0"

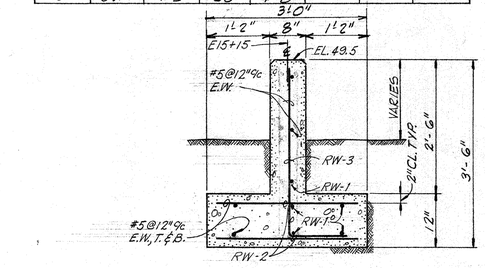

RETAINING WALL SECTION G 157

SCALE: 3/4"=1'-0"

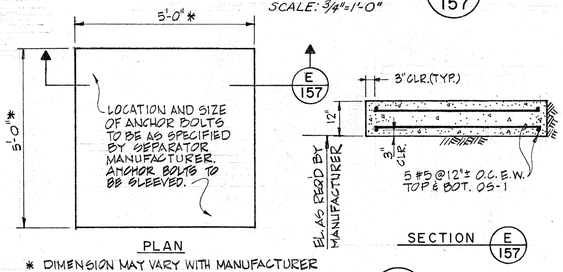

* DIMENSION MAY VARY WITH MANUFACTURER

OIL SEPARATOR SLAB F 157

SCALE: 1/2"=1'-0"

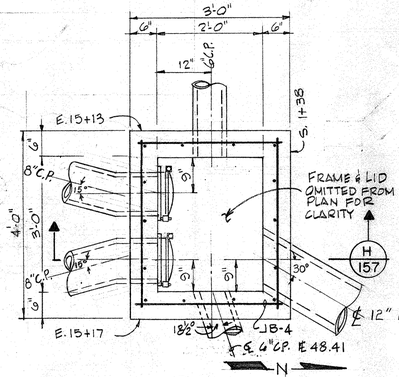

PLAN

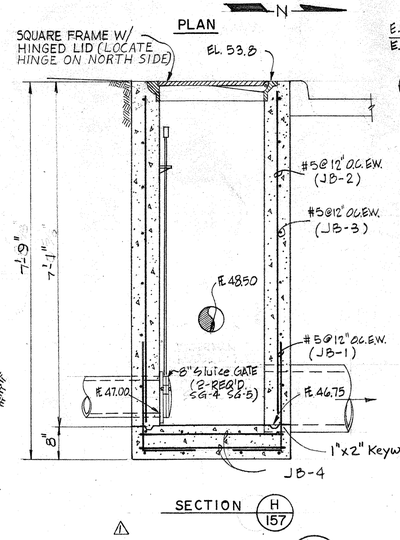

SECTION H 157

JUNCTION BOX J 157

N.T.S.

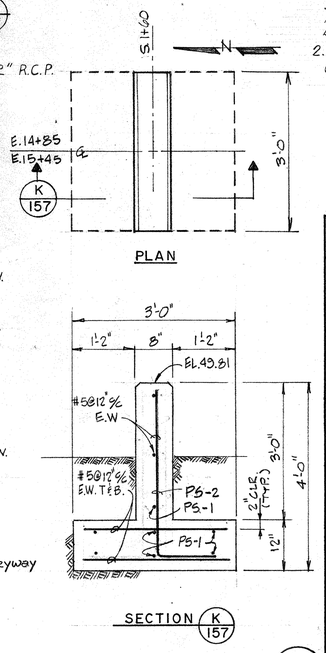

PLAN

SECTION K 157

PIPE SLEEPER DETAIL L 157

SCALE: 3/4"=1'-0"

(TWO REQUIRED)

CITY OF HOUSTON
DEPARTMENT OF PUBLIC WORKS

ALMEDA SIMS SLUDGE DISPOSAL PLANT - 1973

FUEL OIL UNLOADING AND STORAGE FACILITIES STRUCTURAL

RECOMMENDED FOR APPROVAL:
BINKLEY & HOLMES, INC., CONSULTING ENGINEERS

APPROVED:
CHIEF ENGINEER — ASST. CHIEF ENGINEER
ASST. DIRECTORS OF PUBLIC WORKS
DIRECTOR OF PUBLIC WORKS

DESIGNED BY: H.R.E.
DRAWN BY: R.L.P.
CHECKED BY: H.R.E.
SCALE: AS NOTED
DATE: SEPTEMBER, 1975
SHEET 157 OF 200 SHEETS
DRAWING NO. 18045

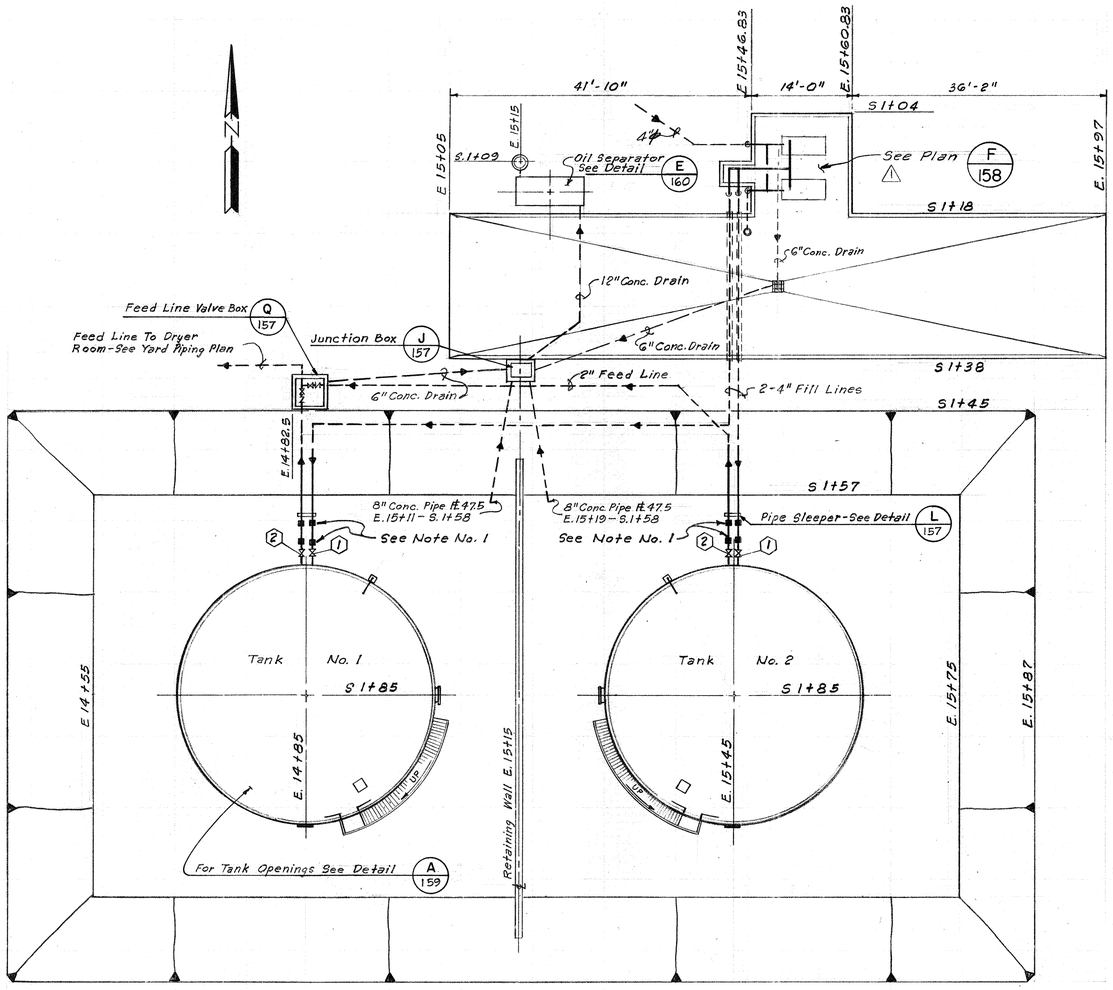

FUEL OIL UNLOADING AND STORAGE FACILITIES PIPING PLAN

Scale: 1"= 10'

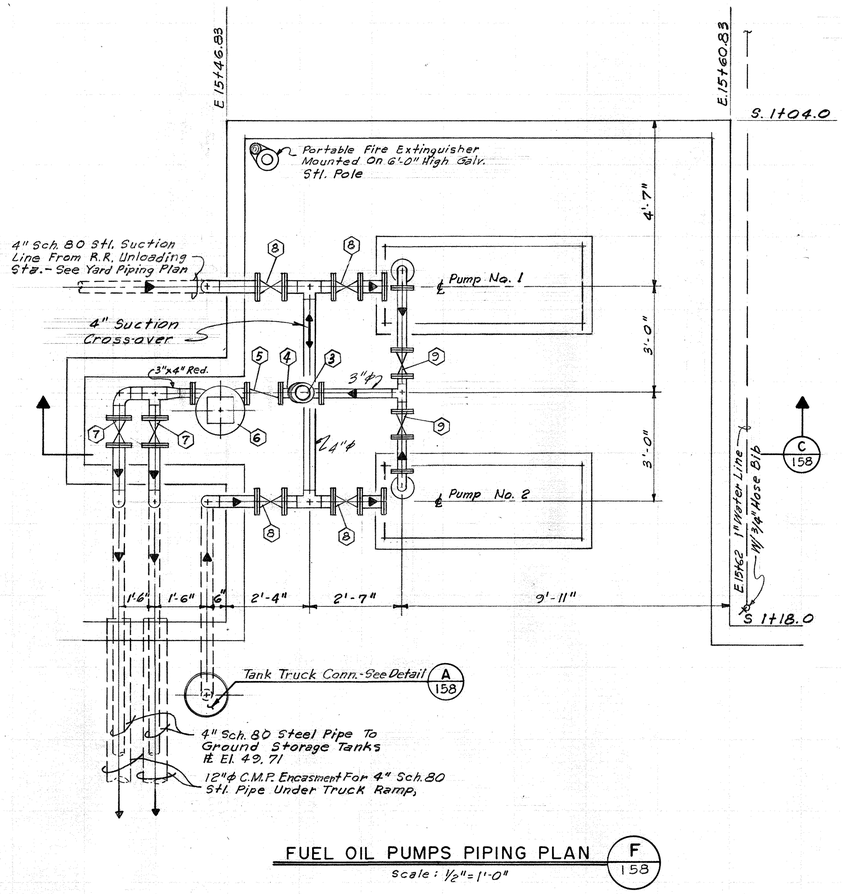

FUEL OIL PUMPS PIPING PLAN F 158

Scale: 1/2"= 1'-0"

ITEM NO.	DESCRIPTION
1	4" Flg. Cast Steel Wedge Gate Valve
2	2" Flg. Cast Steel Wedge Gate Valve
3	Air Release For Strainer
4	3" 150 Lb. ASA Strainer
5	3" Flg. Check Valve
6	3" 150 Lb. Flg. Flow Meter
7	4" Flg. Ball Valve W/ Elect. Operator
8	4" Flg. Ball Valve
9	3" Flg. Ball Valve

FITTING SCHEDULE

NOTES:

(1) 2 Ball Joint Connections On 4" Fill Line And 2" Feed Line 3'-0" Apart, Between Pipe Sleeper And Gate Valve. (Typ. Ea. Fuel Oil Storage Tank)

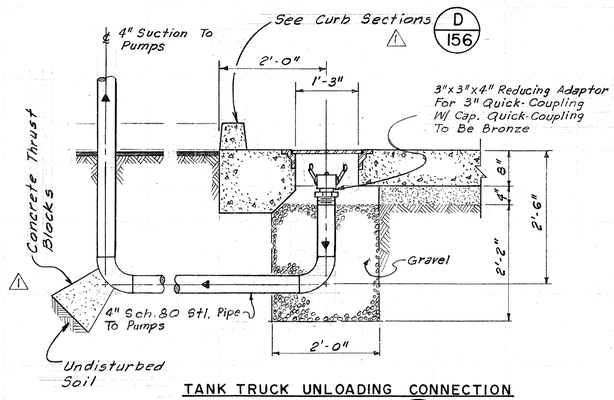

TANK TRUCK UNLOADING CONNECTION

DETAIL A 158

Scale: 3/4"=1'-0"

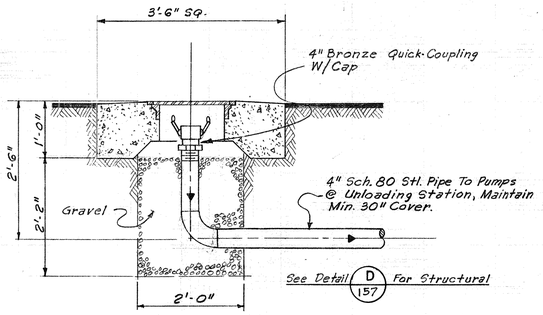

RAILROAD TANK CAR UNLOADING CONNECTION

DETAIL B 158

Scale: 3/4"=1'-0"

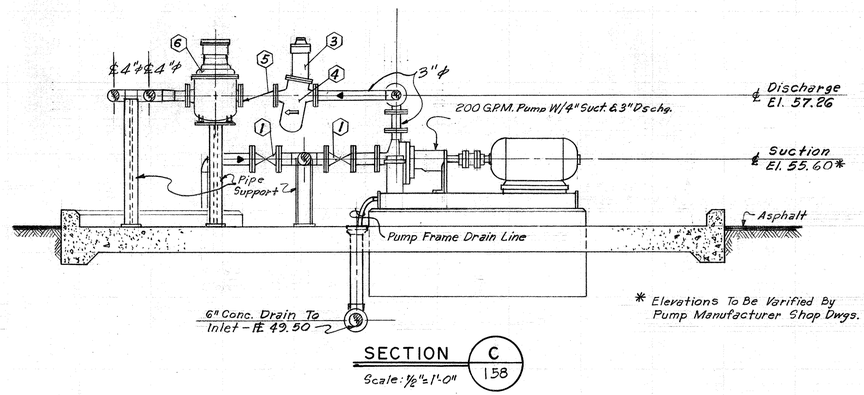

SECTION C 158

Scale: 1/2"=1'-0"

REV. NO.	DATE	DESCRIPTION	DESIGN	CHECKED
1	3-77	ADD CONC. THRUSTBLOCK & GENERAL REVISIONS	J.C.S.	S.R.S.

CITY OF HOUSTON
DEPARTMENT OF PUBLIC WORKS

ALMEDA SIMS
SLUDGE DISPOSAL
PLANT - 1973

FUEL OIL
UNLOADING FACILITIES
PIPING PLAN & DETAILS

RECOMMENDED FOR APPROVAL:
Paul R. Holmes
BINKLEY & HOLMES, INC., CONSULTING ENGINEERS

APPROVED:
CHIEF ENGINEER
ASST. CHIEF ENGINEER
ASST. DIRECTORS OF PUBLIC WORKS
DIRECTOR OF PUBLIC WORKS

DESIGNED BY: H. R. E.
DRAWN BY: E. THOMAS
CHECKED BY: H.R.E., D.R.Y.
SCALE: AS SHOWN
DATE: SEPT. 1975
SHEET 158 OF 200 SHEETS
DRAWING NO. 18045

STATE OF TEXAS PAUL R. HOLMES 27638 REGISTERED

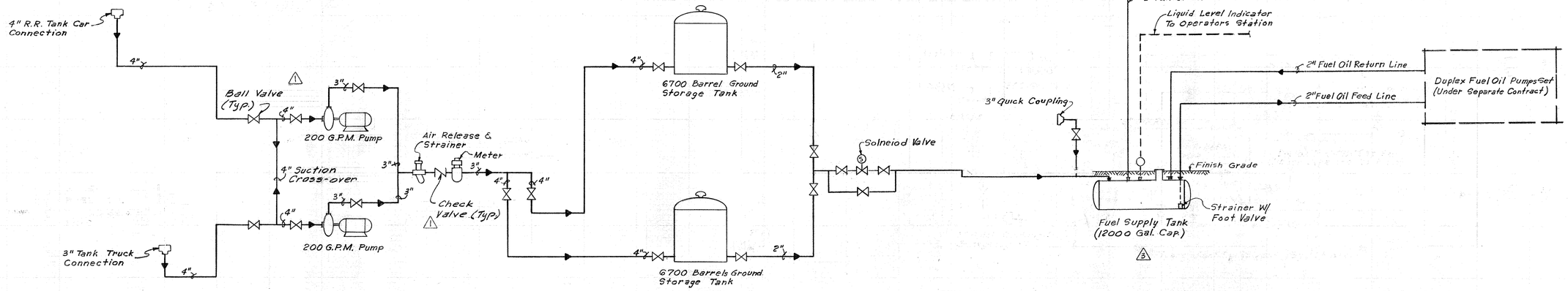

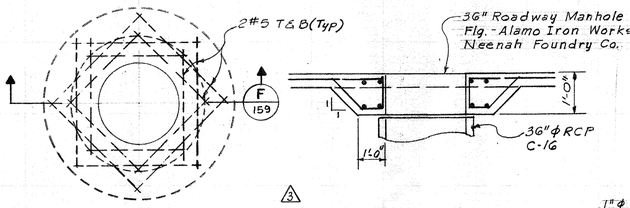

FUEL SUPPLY TANK MANHOLE DETAIL — E 159

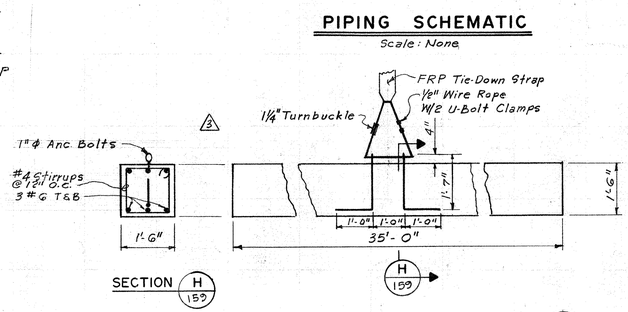

FUEL SUPPLY TANK ANCHOR DETAIL — G 159

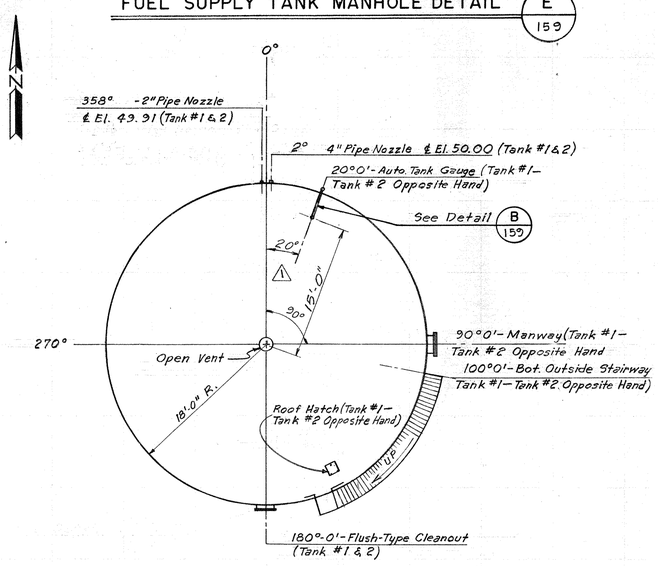

GROUND STORAGE TANKS NOZZLE AND OPENING DETAIL — A 159

Scale: 1/8" = 1'-0"

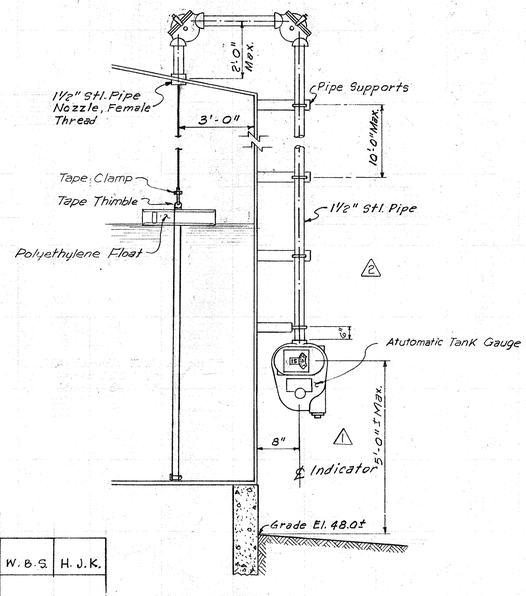

(2 Req'd., One Each Tank) LIQUID LEVEL INDICATOR DETAIL — B 159

Scale: None

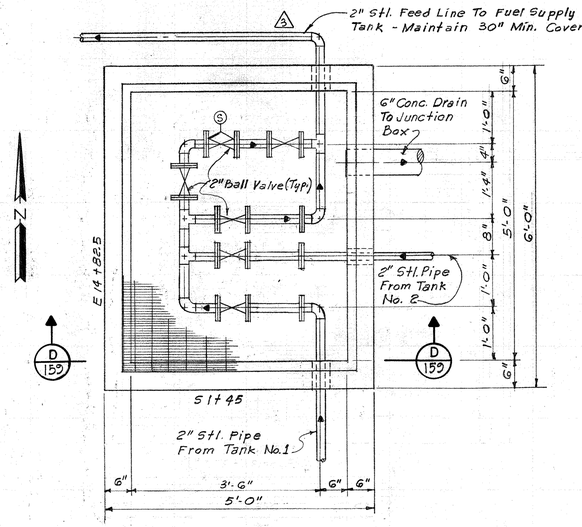

PLAN

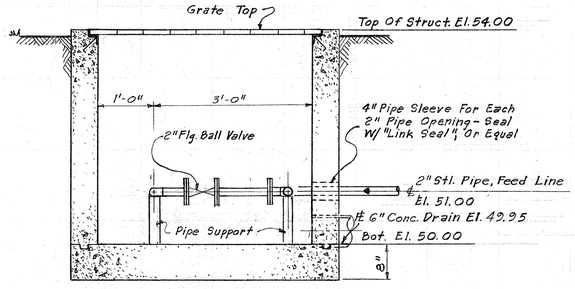

For Structural See Detail Q 157

SECTION D 159

VALVE BOX PIPING ARRANGEMENT DETAIL — C 159

Scale: 3/4" = 1'-0"

3	5-79	Permit Revision Add Fuel Supply Tank	W.B.S.	H.J.K.
2	6-77	REV. LIQUID LEVEL INDICATOR	J.C.S.	K.R.L.
REV. NO.	DATE	DESCRIPTION	DESIGN	CHECKED
1	3-77	REVISED ANGLES & CALL OUT VALVES, & GENERAL REVISIONS	J.C.S.	S.R.G.
REV. NO.	DATE	DESCRIPTION	DESIGN	CHECKED

CITY OF HOUSTON
DEPARTMENT OF PUBLIC WORKS

ALMEDA - SIMS SLUDGE DISPOSAL PLANT - 1973

FUEL OIL PIPING SCHEMATIC AND DETAILS

RECOMMENDED FOR APPROVAL:
BINKLEY & HOLMES, INC., CONSULTING ENGINEERS

APPROVED:
CHIEF ENGINEER — ASST. CHIEF ENGINEER
ASST. DIRECTORS OF PUBLIC WORKS
DIRECTOR OF PUBLIC WORKS

DESIGNED BY: H.R.E.
DRAWN BY: E. THOMAS
CHECKED BY: H.R.E., D.R.Y.
SCALE: AS SHOWN
DATE: SEPT. 1973
SHEET 159 OF 200 SHEETS
DRAWING NO. 18045

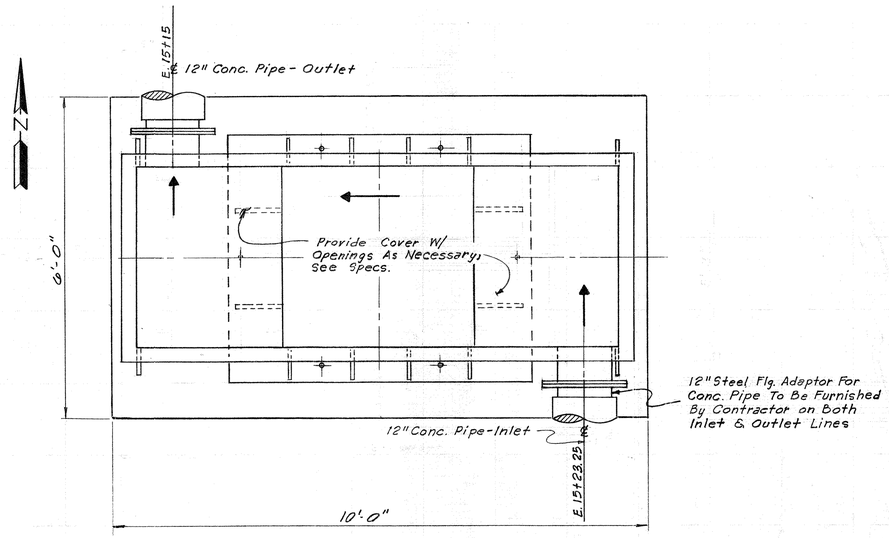

PLAN

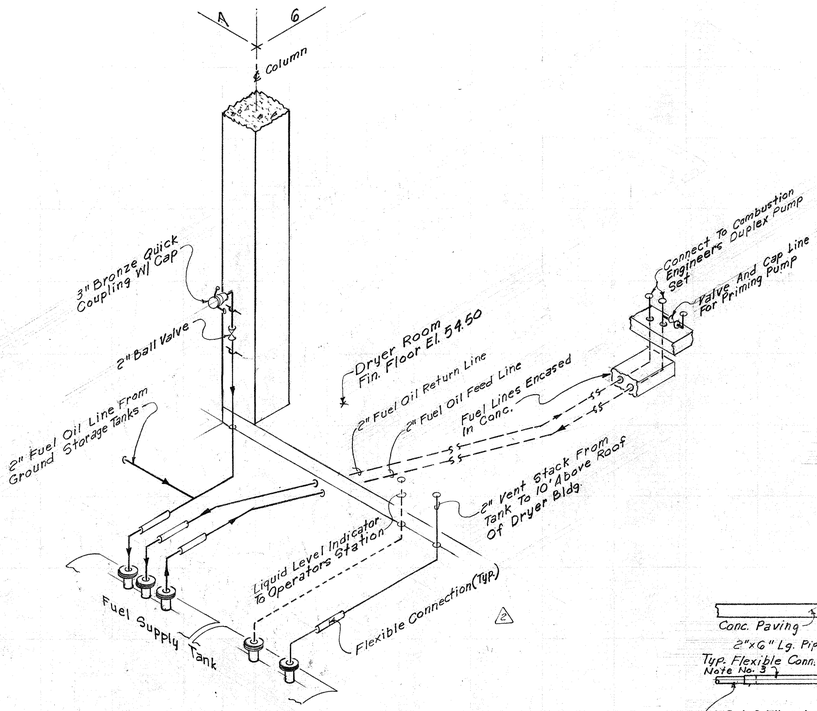

DRYER ROOM FUEL OIL PIPING DETAIL F 160

N. T. S.

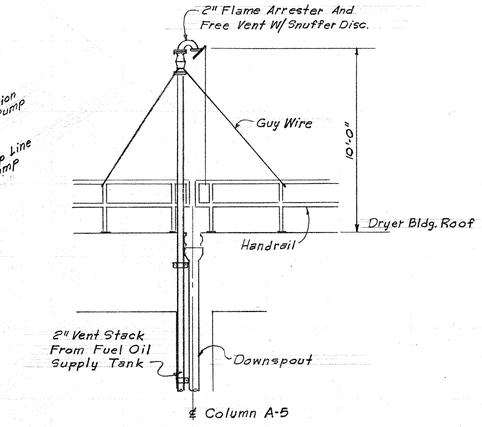

SUPPLY TANK VENT STACK DETAIL

N. T. S.

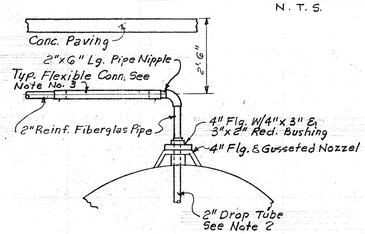

NOTES:

1. Liquid Level Nozzle Shall Have Level Transmitter Mounted To Tank
2. Drop Tube On Fill, Feed, & Return Pipes Extend To 3" Above Bottom Of Tank.
3. 2" x 36" Lg. Flexible Connector By Hewitt-Robins, Uniroyal Or Eq. W/All SS Hose Clamps
4. Extend Reinf. From 36"RCP 4" Into Conc. Slab Above

△2

FUEL SUPPLY TANK CONNECTION DETAIL K 160

N. T. S.

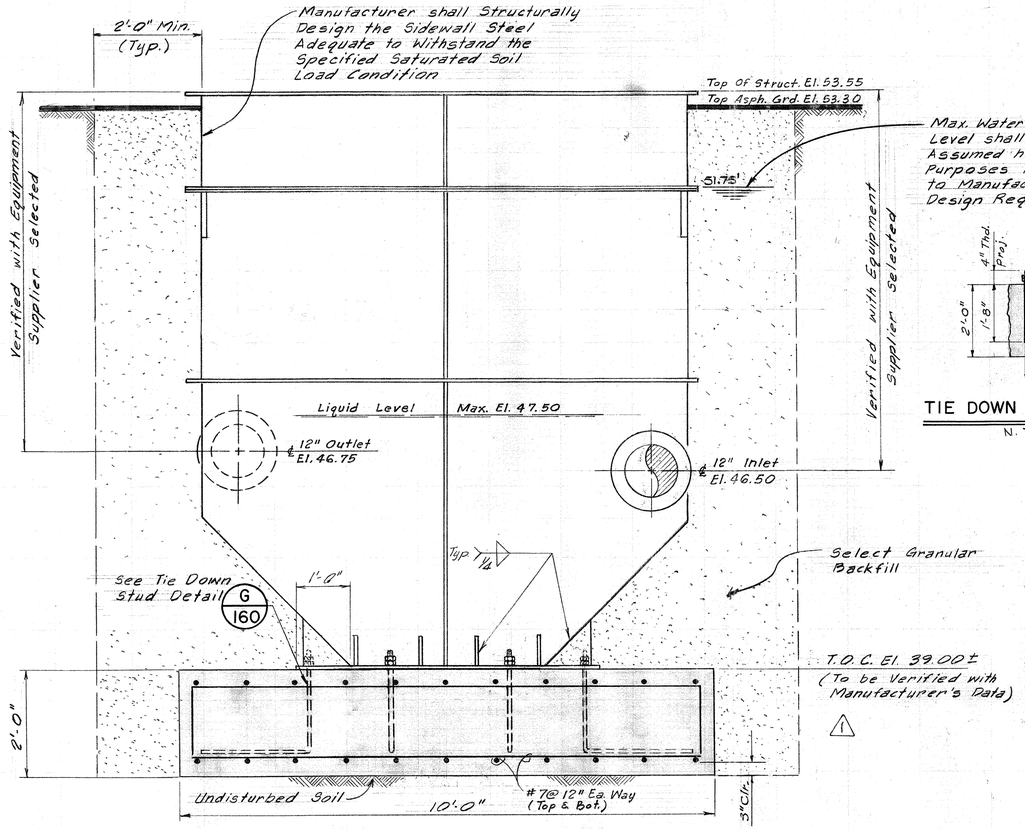

ELEVATION

OIL SEPARATOR DETAIL E 160

Scale: 3/4" = 1'-0"

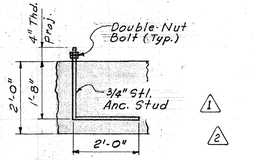

△1 △2

TIE DOWN STUD DETAIL G 160

N. T. S.

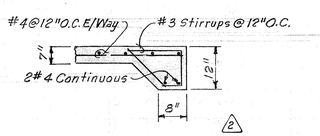

△2

DETAIL M 160

N. T. S.

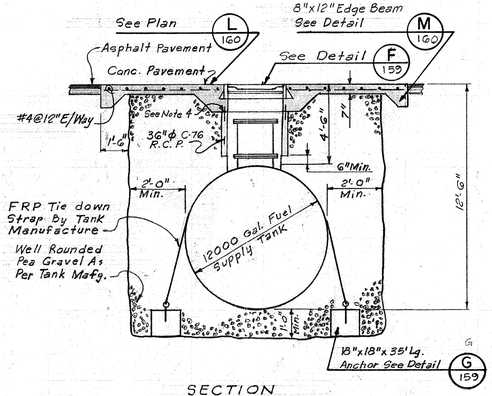

SECTION

FUEL SUPPLY TANK DETAIL J 160

N. T. S.

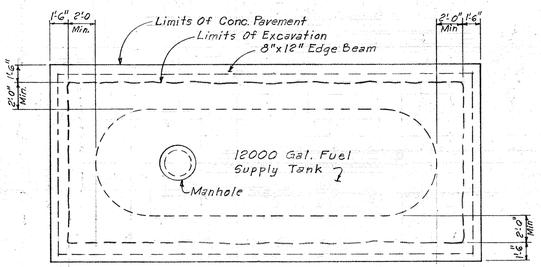

△2

FUEL SUPPLY TANK PLAN L 160

N. T. S.

REV. NO.	DATE	DESCRIPTION	DESIGN	CHECKED
△2	5-79	PERMIT REVISION REV. FUEL SUPPLY DETAILS	W. B. S.	H. J. K.
△1	3-77	REVISED OIL SEPARATOR	J.C.S.	S.R.S.

H. R. SCHRADER 54665 LICENSED PROFESSIONAL ENGINEER

STATE OF TEXAS PAUL R. HOLMES 27638 REGISTERED PROFESSIONAL ENGINEER

CITY OF HOUSTON
DEPARTMENT OF PUBLIC WORKS

ALMEDA - SIMS SLUDGE DISPOSAL PLANT - 1973

OIL SEPARATOR AND MISC. DETAILS

RECOMMENDED FOR APPROVAL:
BINKLEY & HOLMES, INC., CONSULTING ENGINEERS

APPROVED:
CHIEF ENGINEER — ASST. CHIEF ENGINEER
ASST. DIRECTORS OF PUBLIC WORKS
DIRECTOR OF PUBLIC WORKS

DESIGNED BY: H. R. E.
DRAWN BY: E. THOMAS
CHECKED BY: H.R.E., D.R.Y.
SCALE: AS SHOWN
DATE: SEPT. 1975
SHEET 160 OF 200 SHEETS
DRAWING NO. 18045

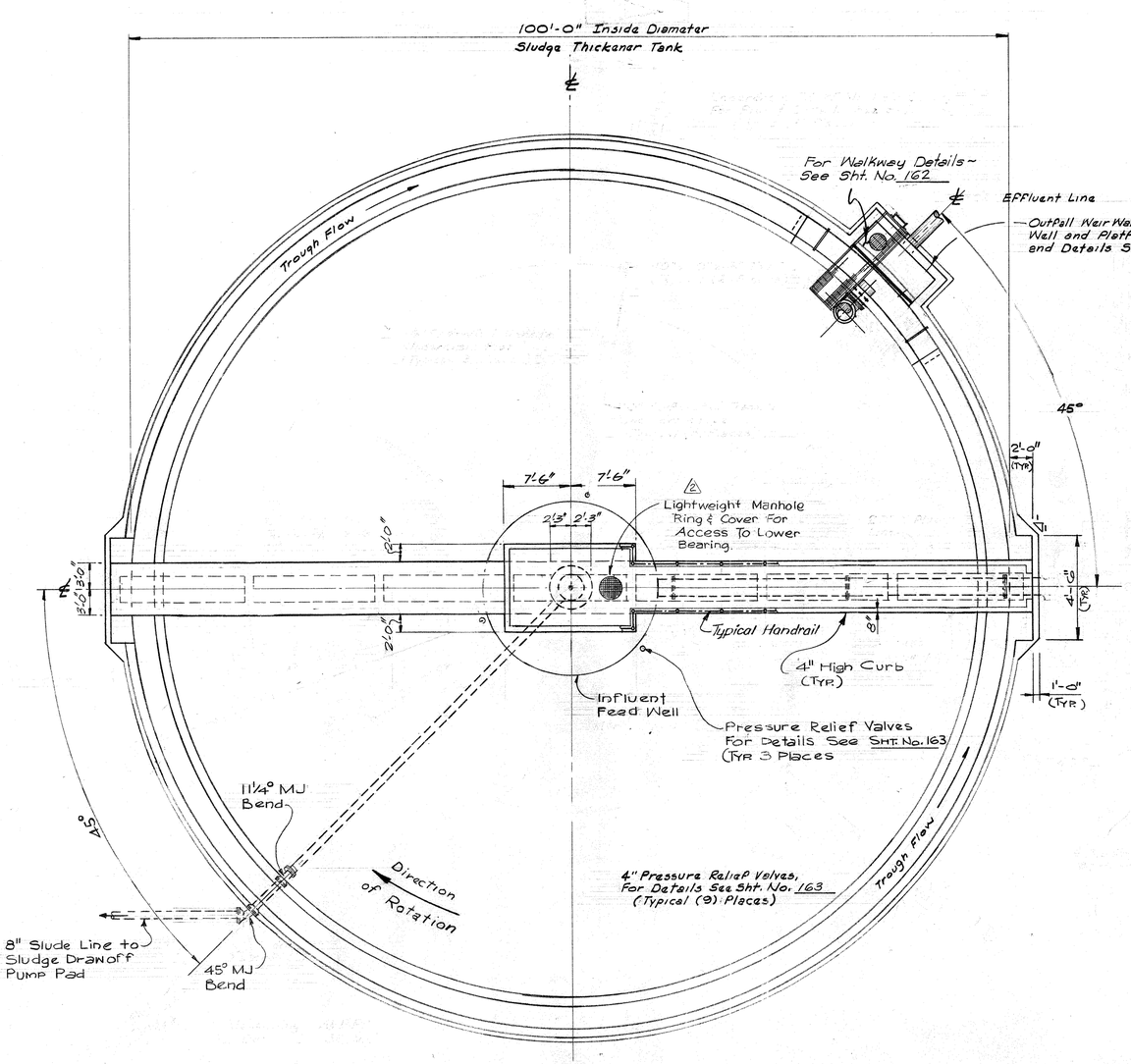

PLAN – EQUIPMENT ⚠1

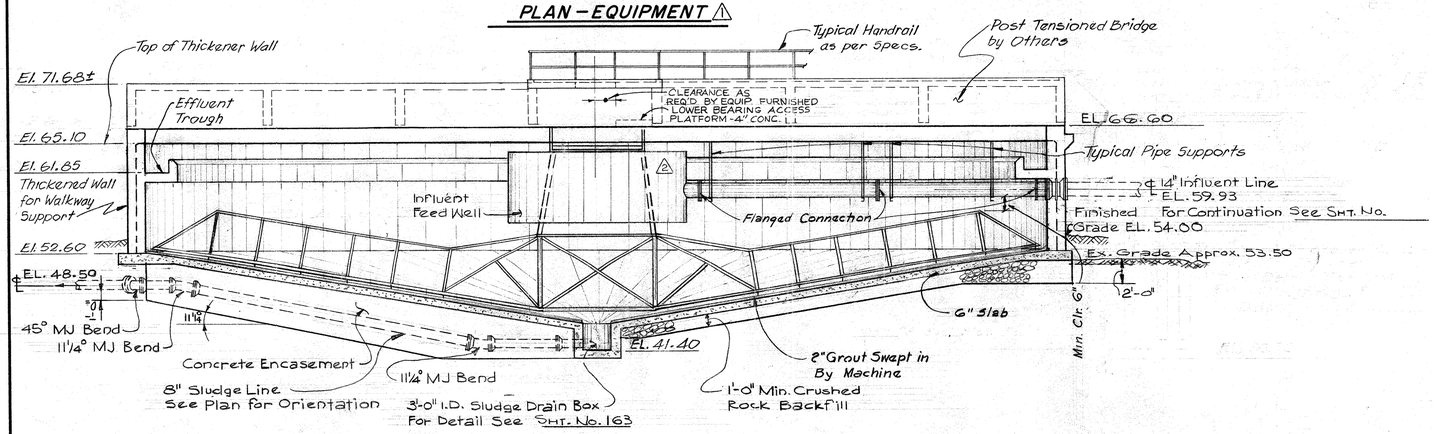

SECTIONAL ELEVATION

Scale : 1/8"=1'-0"

⚠1

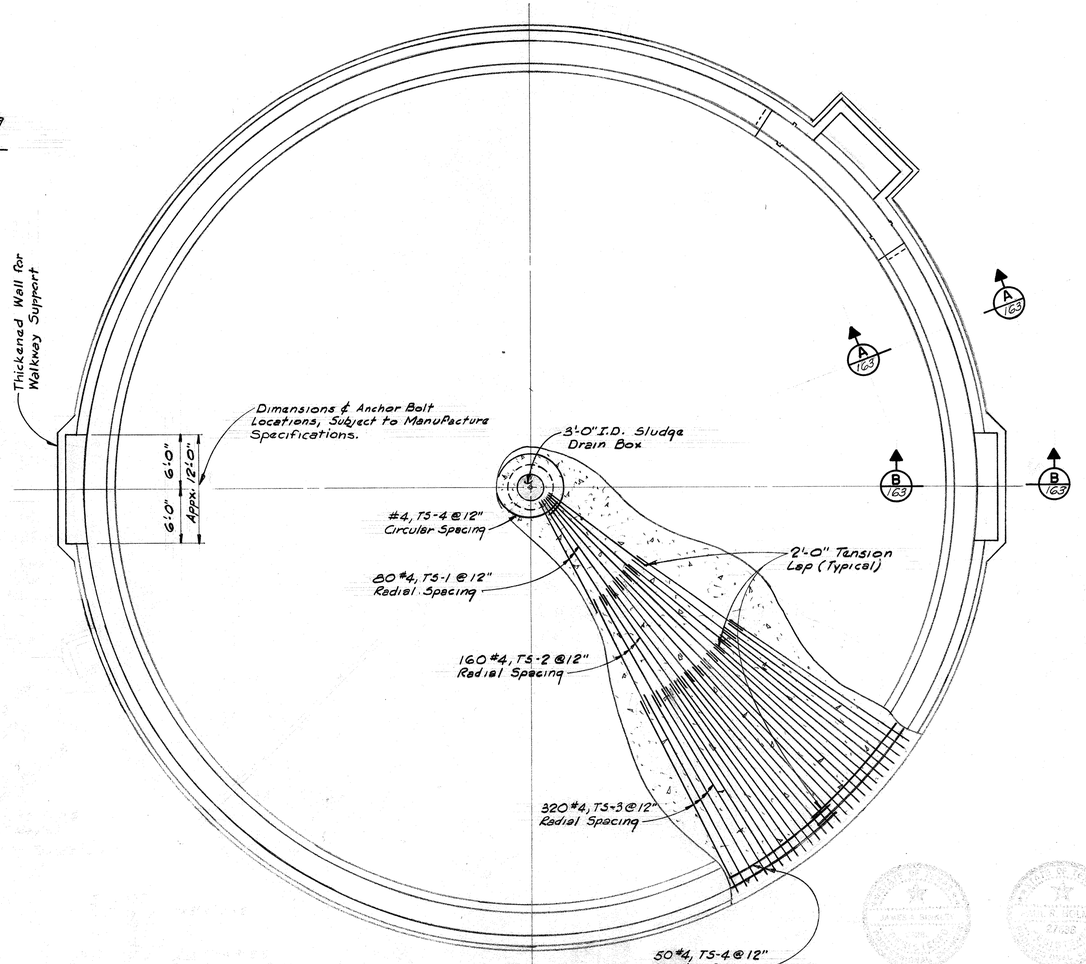

PLAN – STRUCTURAL

Scale : 1/8"=1'-0"

NOTES:

1. All dimensions shown, related to mech. equipt., are to be verified with Mfrs. specifications, and or subject to revision by the Engr.
2. For Tank Reinf. Stl. Schedule, See Sht. 163

Rev. No.	Date	Description	Design	Checked
⚠2	6-77	Add Access To Lower Bearing & Platform	J.C.S	K.R.L
⚠1	3-77	General Modification	J.C.S	S.R.S.

CITY OF HOUSTON
DEPARTMENT OF PUBLIC WORKS

ALMEDA SIMS
SLUDGE DISPOSAL
PLANT – 1973

SLUDGE THICKENER TANK
STRUCTURAL SLAB PLAN
EQUIPMENT LAYOUT PLAN

RECOMMENDED FOR APPROVAL:
BINKLEY & HOLMES, INC., CONSULTING ENGINEERS

APPROVED:
CHIEF ENGINEER — ASST. CHIEF ENGINEER
ASST. DIRECTORS OF PUBLIC WORKS
DIRECTOR OF PUBLIC WORKS

DESIGNED BY: V. Jafri
DRAWN BY: D. L. Buckwalter & G.T. RYAN
CHECKED BY: M. B. J.
SCALE: As Shown
DATE: Dec., 1973
SHEET 161 OF 200 SHEETS
DRAWING NO. 18045

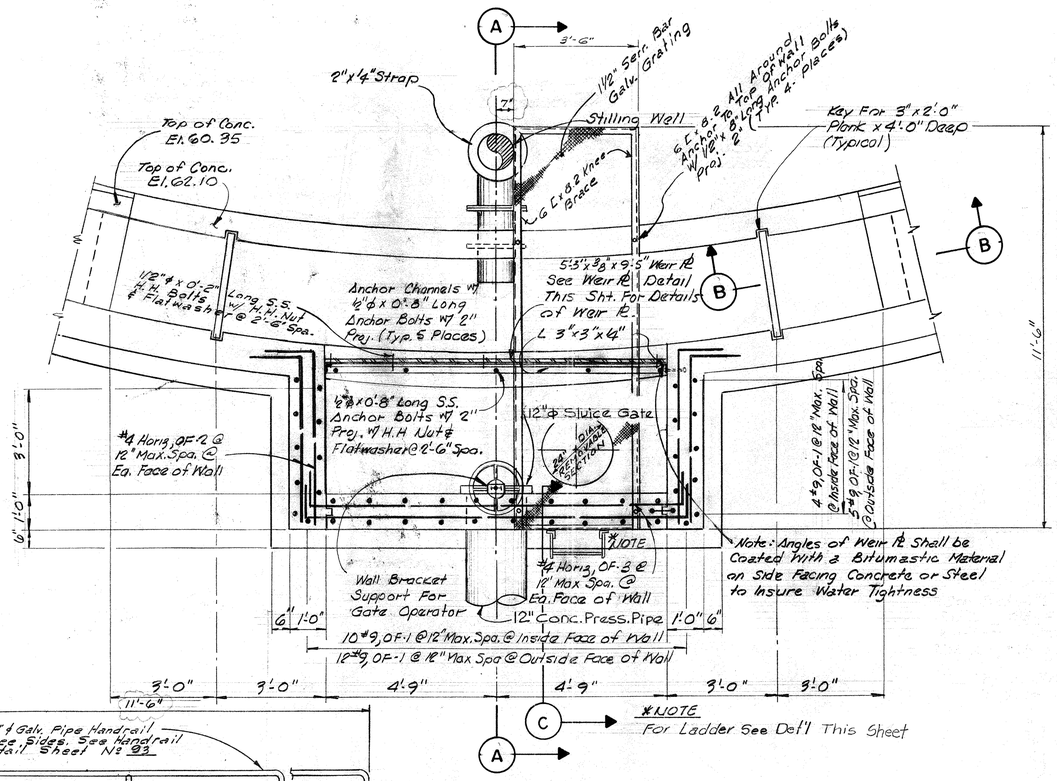

PLAN
OUTFALL WEIR WALL STRUCTURE
Scale: ½"=1'-0"

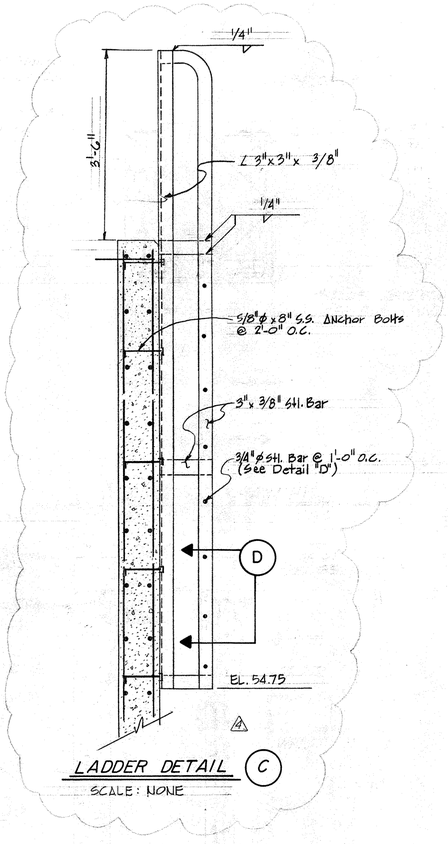

LADDER DETAIL (C)
SCALE: NONE

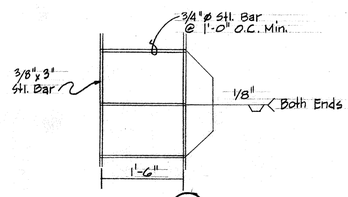

DETAIL (D)
SCALE: NONE

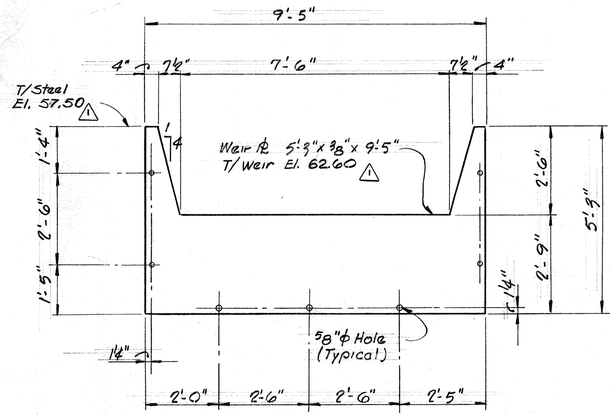

WEIR PLATE DETAIL
(2 Req'd) Scale: ½"=1'-0"

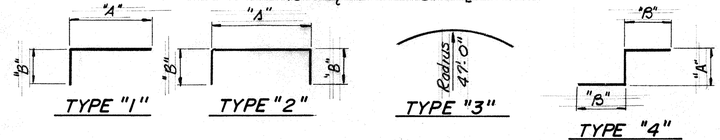

BENT BAR DETAILS
See Schedule For Dimensions

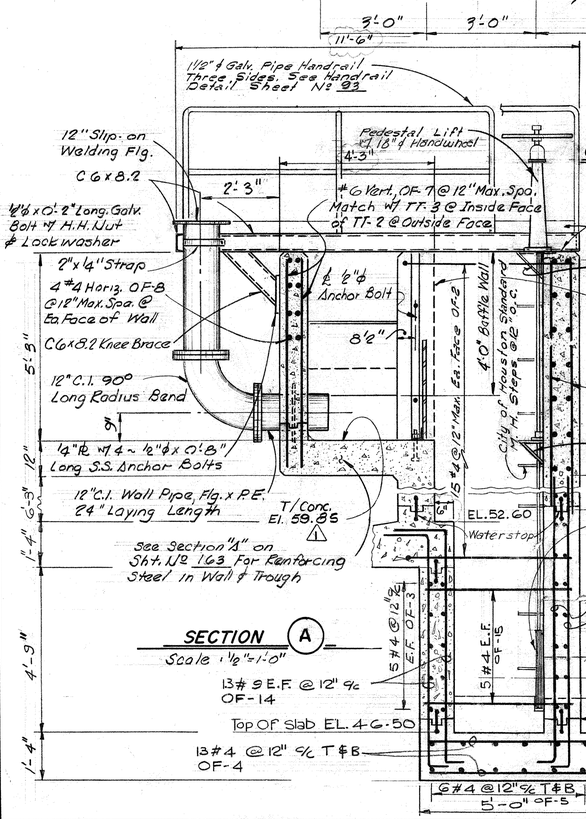

SECTION (A)
Scale: 1½"=1'-0"

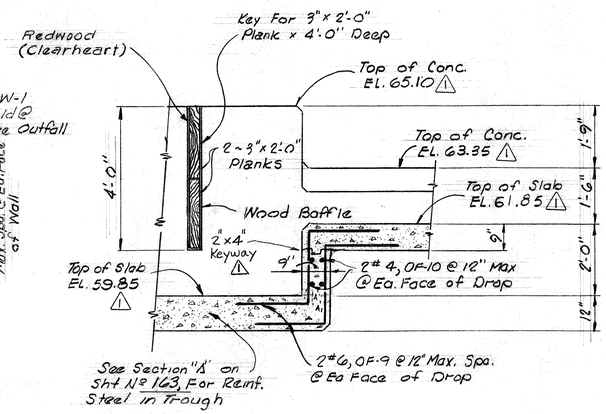

SECTION (B)
Scale: ½"=1'-0"

REINFORCING STEEL SCHEDULE FOR (ONE) OUTFALL STRUCTURES						
MARK	TYPE	SIZE	NO. REQ'D	LENGTH PER BAR	BENT BAR DIM. A	B
OF-1	Str.	#9	40	11'-10"		
OF-2	1	#4	60	6'-4"	4'-10"	1'-6"
OF-3	2	#4	44	13'-2"	11'-2"	1'-0"
OF-4	Str.	#4	26	4'-6"		
OF-5	Str.	#4	12	12'-2"		
OF-6	1	#9	40	8'-6"	6'-0"	2'-0"
OF-7	Str.	#6	42	6'-0"		
OF-8	3	#4	8	20'-0"	As Shown	
OF-9	4	#6	8	6'-0"	2'-0"	2'-0"
OF-10	Str.	#4	8	3'-11"		
OF-14	4	#9	26	7'-0"	4'-0"	1'-6"
OF-15	1	#4	10	5'-0"	4'-0"	1'-0"

REV. NO.	DATE	DESCRIPTION	DESIGN	CHECKED
4	11-79	LADDER DETAILS AND DIMENSIONS	D.D.C.	H.J.K.
3	6-77	Rev. Section A	J.C.S	K.R.L.
2	3-77	GENERAL MODIFICATIONS	J. C.S	S.R.S.
1	1-77	ELEVATION RAISED TO 3'-0" & DIMENSIONS CHANGED		

CITY OF HOUSTON
DEPARTMENT OF PUBLIC WORKS

ALMEDA SIMS
SLUDGE DISPOSAL
PLANT – 1973

SLUDGE THICKENER TANK
STEEL DTLS.- OUTFALL WEIR WALL
STR., UNDERDRAIN PIT, & MISC.

RECOMMENDED FOR APPROVAL:
BINKLEY & HOLMES, INC., CONSULTING ENGINEERS

APPROVED:
CHIEF ENGINEER — ASST. CHIEF ENGINEER
ASST. DIRECTORS OF PUBLIC WORKS
DIRECTOR OF PUBLIC WORKS

DESIGNED BY: V. Jacci
DRAWN BY: G.T. RYAN
CHECKED BY: M. B. J.
SCALE: As Shown
DATE: Dec., 1973
SHEET 162 OF 200 SHEETS
DRAWING NO. 18045

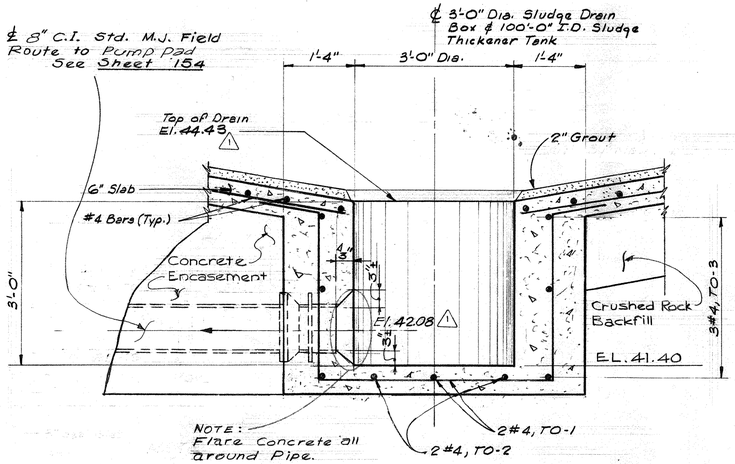

DETAIL "1" ⚠2

N. T. S.

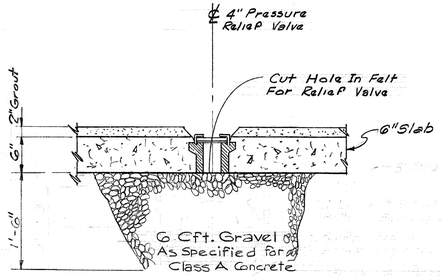

TYPICAL SECTION - PRESSURE RELIEF VALVE ⚠2

Scale: 3/4" = 1'-0"

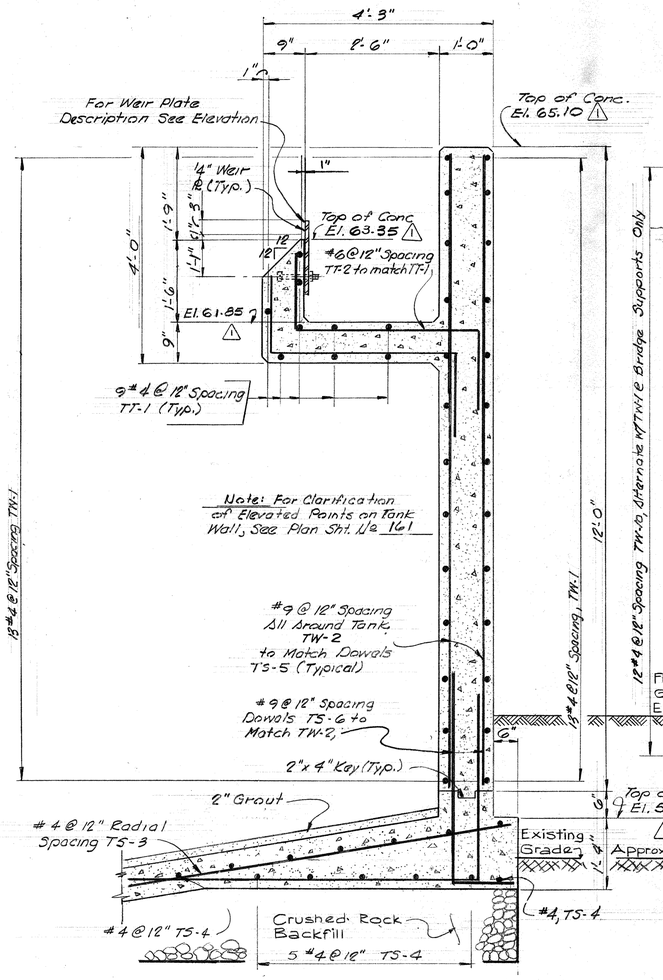

SECTION (A/161) ⚠2

Scale: 3/4" = 1'-0"

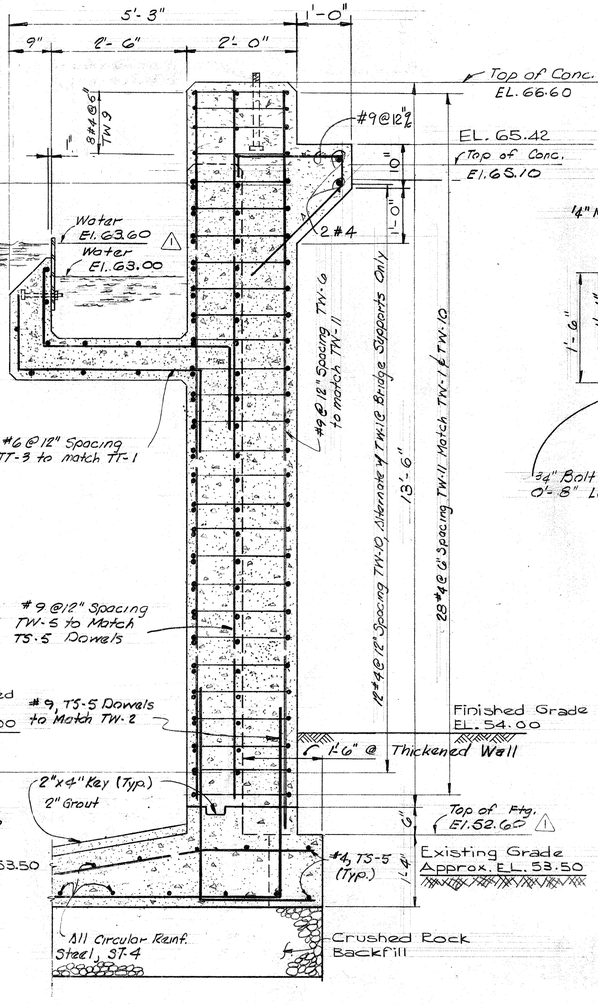

SECTION (B/161) ⚠2

Scale: 3/4" = 1'-0"

PLAN
ANCHOR BOLT LAYOUT
TYPICAL 4 PLACES

Scale 1/2" = 1'-0"

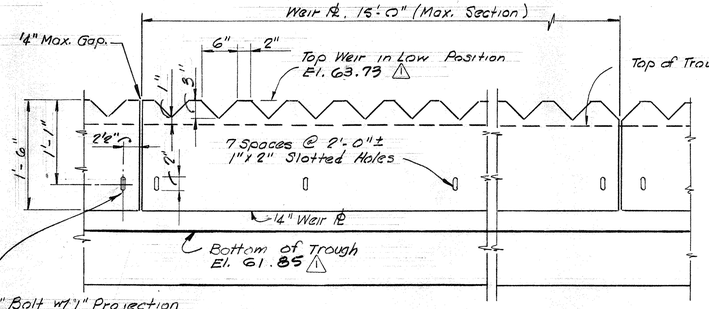

ELEVATION
WEIR WALL PLATE ⚠2

Scale: 1" = 1'-0"

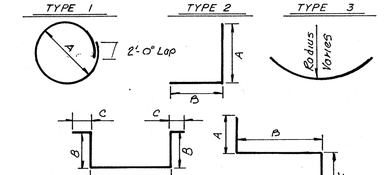

BENT BAR DETAILS

See Schedule for Dimensions

REINFORCING STEEL SCHEDULE
THICKENER TANK

MARK	TYPE	SIZE	NO. REQ'D	LENGTH PER BAR	BENT BAR "A"	BENT BAR "B"	DIM. "C"
TS-1	Str.	#4	80	14'-0"			
TS-2	Str.	#4	160	14'-6"			
TS-3	Str.	#4	320	25'-0"			
TS-4	1	#4	56	Varies			
TS-5	Str.	#4	4	6'-8"			
TS-6	2	#9	320	8'-0	3'-6	4'-6"	1'-0"
TW-1	1	#4	26	Varies			
TW-2	Str.	#9	209	11'-10"			
TW-3		Omitted					
TW-4		Omitted					
TW-5	Str.	#9	32	13'-4"			
TW-6	Str.	#9		13'-10"			
TW-7		Omitted					
TW-8		Omitted					
TW-9	Str.	#4	16	6'-8"			
TW-10	3	#4	48	8'-0"			
TW-11	4	#4		18'-0"	1'-8"	6'-8"	
TT-1	1	#4	9	Varies			
TT-2	5	#6	320	6'-9"	1'-10"	3'-5"	1'-6"
TT-3	3	#6	320	5'-10"	1'-0"	3'-4"	1'-6"
TO-1	4	#4	2	10'-4"	3'-0"	4'-4"	1'-6"
TO-2	4	#4	2	9'-1"	3'-0"	3'-1"	1'-6"
TO-3	1	#4	3	15'-8"	4'-4"		

REV. NO.	DATE	DESCRIPTION	DESIGN	CHECKED
⚠2	3-77	GENERAL MODIFICATIONS	J. C. S	S.R.S.
⚠1	1-77	ELEVATION RAISED TO 3'-0" & GENERAL MODIFICATIONS		

CITY OF HOUSTON
DEPARTMENT OF PUBLIC WORKS

ALMEDA SIMS
SLUDGE DISPOSAL
PLANT — 1973

SLUDGE THICKENER TANK
SECTIONS AND DETAILS

RECOMMENDED FOR APPROVAL:
BINKLEY & HOLMES, INC., CONSULTING ENGINEERS

APPROVED:
CHIEF ENGINEER — ASST. CHIEF ENGINEER
ASST. DIRECTORS OF PUBLIC WORKS
DIRECTOR OF PUBLIC WORKS

DESIGNED BY: V. Lafri
DRAWN BY: G.T. RYAN
CHECKED BY: M.B.J.
SCALE: AS SHOWN
DATE: Dec., 1973
SHEET 163 OF 200 SHEETS
DRAWING NO. 18045

FILTRATE SEAL PIT

To Aeration Tank At Wastewater Treatment Plant

WET FILTRATE RECEIVER
DRY FILTRATE RECEIVER
DRY VACUUM PUMP
WET VAC PUMP
12" Exhaust To Atmosphere
10" Exhaust To Atmosphere

FLOW METER (Typ)
Chemical Control Rack (Typ)
FLOCCULATOR

VACUUM FILTER NO. 1
VACUUM FILTER NO. 2
VACUUM FILTER NO. 3
VACUUM FILTER NO. 4
VACUUM FILTER NO. 5
VACUUM FILTER NO. 6

18'-0" Min. Of 6" C.I.P.L. Pipe before Ea. Flocculator & 6" S.F. Fittings To Be R.L. Typical @ Ea. Flocculator

Air Hose Valve Typ. @ Ea. Filter

PLANT AIR COMPRESSORS
FILTER AIR BLOWERS

CONCENTRATED FERRIC CHLORIDE STORAGE TANKS
No. 1 No. 2 No. 3 No. 4

PLANT WATER TANK NON POTABLE
3 WATER PUMPS

CONSTANT HEAD TANK
2 FUTURE LINES
AIR LIFT
SLUDGE HOLDING TANK

SANITARY SEWER M.H. to W.W.T. PLANT

SLUDGE THICKENER TANK

2 SLUDGE PUMPS

#5 #6 CONCENTRATED POLYMER TANKS

#7 DILUTED POLYMER USE TANK

#8 DILUTED FERRIC CHLORIDE USE TANK

LEGEND

T.S.	THICKENED SLUDGE - 8" D.I.	From Thickener Tank To S. H. Tank.
S.F.	SLUDGE FEED - 6" D.I. From	Constant Head Tank To Flocculator
D.V.F.	DRY VACUUM FILTRATE - 6" D.I.	R.L. - From Filter To Filtrate Receiver
W.V.F.	WET VACUUM FILTRATE - 6" D.I.	R. L. - From Filter To Filtrate Receiver
D.F.D.	DRY FILTRATE DRAIN - 6" D. I.	R. L. - From Filtrate Receiver To F. Seal Pit
W.F.D.	WET FILTRATE DRAIN - 8" D.I.	R. L. - From Filtrate Receiver To F. Seal Pit
D.V.H.	DRY VACUUM HEADER - 10" D.I. From	Filtrate Receiver To Vacuum Pump
W.V.H	WET VACUUM HEADER - 8" D.I. From	Filtrate Receiver To Vacuum Pump
P.W	PLANT WATER - 6", 4" & 2" From	Plant Water Tank - Non Potable To Plant
B.A.	FILTER AIR - 6", 4" & 2" From	Air Blowers To V. Filters.
F.C.	FERRIC CHLORIDE - Sch. 80 P.V.C.	From F.C. Storage Tanks To Flocculators
C.A.	COMPRESSED AIR - 2" Std. From	Plant Air Compressors To Plant
P.M.	POLYMER - Sch. 80. P.V.C. From Polymer	Tank To Flocculators
F.D.	FILTER DRAIN - 6", 8" & 10" D.I.	From Filters To Filtrate Seal Pit
EX.	AIR EXHAUST - 10" & 12" D. I. From	Vac. Pump Silencers To Atmosphere

GATE VALVE
SARAN LINED DIAPHRAM VALVE
CHECK VALVE
GATE VALVE W/ Chain Wheel
BUTTERFLY VALVE
VALVE - See Related Plans

REV.NO.	DATE	DESCRIPTION	DESIGN	CHECKED
4	5-79	CONSTRUCTION REVISION INDICATED FCL'S Connection to Bldg. No. 2	DDC	HJK
3	11-78	Permit Revision INDICATED PLANT WATER IS NON-POTABLE	H.J.K.	K.R.L
2	6-77	REV. SLUDGE FEED PIPING	J.C.S	K.R.L
1	3-77	REMOVE MOISTURE TRAPS REV'D VACCUM PUMPS, REV'D. FLOCCULATION SYSTEM	J.C.S.	S.R.S

CITY OF HOUSTON
DEPARTMENT OF PUBLIC WORKS

ALMEDA-SIMS SLUDGE DISPOSAL PLANT-1973

FILTER ROOM SCHEMATIC PIPING PLAN

RECOMMENDED FOR APPROVAL:
BINKLEY & HOLMES, INC., CONSULTING ENGINEERS

APPROVED:
CHIEF ENGINEER
ASST. CHIEF ENGINEER
ASST. DIRECTORS OF PUBLIC WORKS
DIRECTOR OF PUBLIC WORKS

DESIGNED BY: M. B. J.
DRAWN BY: E. THOMAS
CHECKED BY: M. B. J.
SCALE: NONE
DATE: DEC. 1973
SHEET 16T OF 200 SHEETS
DRAWING NO. 13045

138

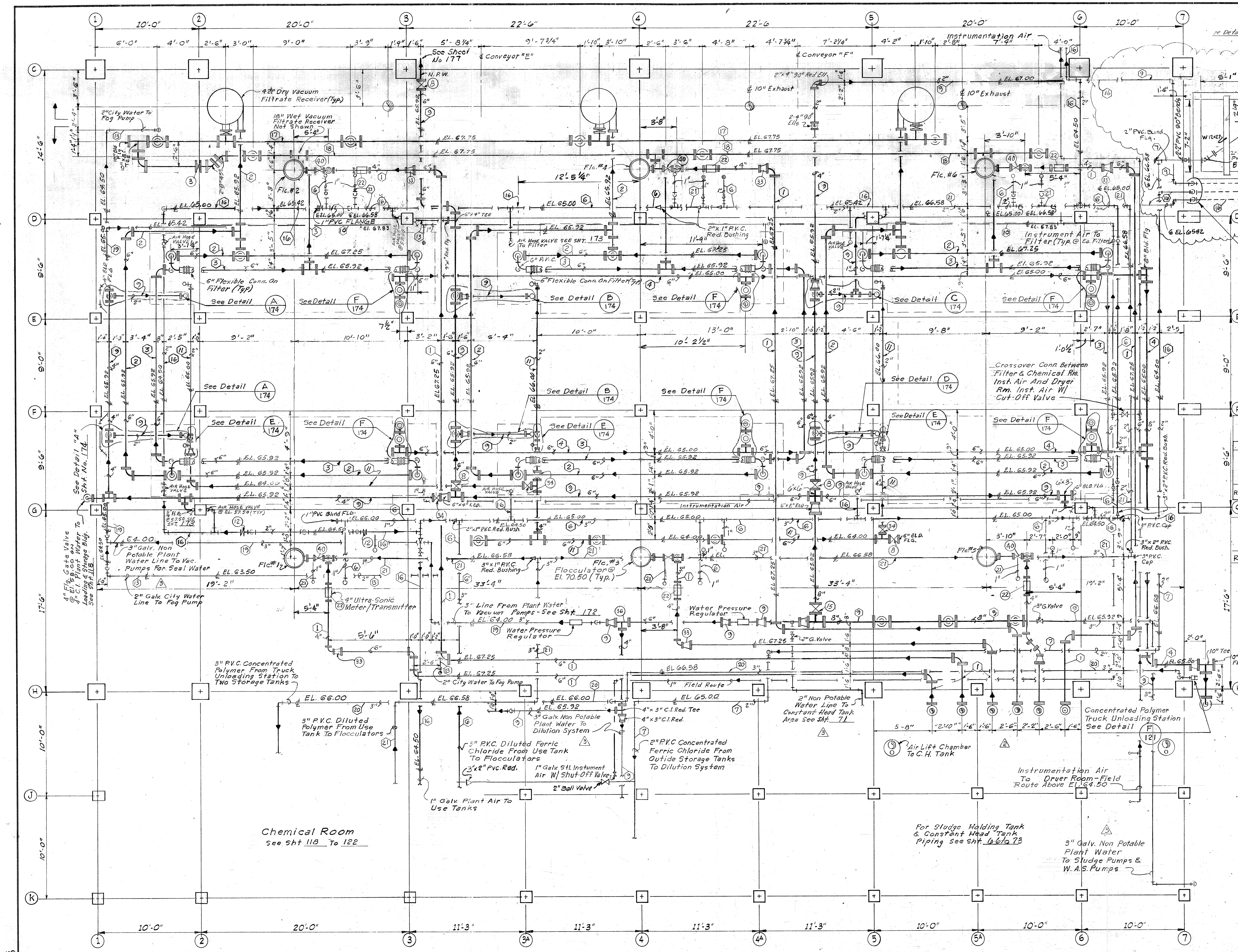

NOTE:

(1) ◯ - See "MATERIAL LEGEND" Sht. No. 171

(2) ⬡ - See "LINE SCHEDULE" Sht. No. 171

(3) Ferric Chloride Line To Be Wrapped W/ Electric Heat Tape - See Specs.

(4) All P.V.C Pipe To Be Sch. 80

REV. NO	DATE	DESCRIPTION	DESIGN	CK
3	11-78	Permit Revisions Indicated Plant Water As Non Potable	HJK	KRL
2	6-77	Rev. Sludge Lines	JCS	KRL
1	3-77	Rev. Filtrate Receivers - Rev. Dimensions - Add Flow Arrows - Add Sonic Meter Rev. Piping - Add Chem. Rm.	JCS	SRS

Rev. No.	Date	Description	Design	Ck
4	10/79	Construction Revision Revised Piping - Add Ferric Chloride Junction Box	WGW	HJK

CITY OF HOUSTON
DEPARTMENT OF PUBLIC WORKS

ALMEDA-SIMS SLUDGE DISPOSAL PLANT-1973

FILTER ROOM
PIPING PLAN ABOVE
ELEVATION 63.00

RECOMMENDED FOR APPROVAL:
BINKLEY & HOLMES, INC., CONSULTING ENGINEERS

APPROVED:
CHIEF ENGINEER — ASST. CHIEF ENGINEER
ASST. DIRECTORS OF PUBLIC WORKS
DIRECTOR OF PUBLIC WORKS

DESIGNED BY: M. B. J.
DRAWN BY: E. Thomas
CHECKED BY: M. B. J.
SCALE: 1/4" = 1'-0"
DATE: DEC. 1973
SHEET 168 OF 200 SHEETS
DRAWING NO. 18045

139

SEE PIPE TRENCH DRAIN DETAIL SHT. 173

10"x8" RED.

10"x8" C.I. M.J. TEE

SEE DRAINAGE TRENCH DETAILS SHT. 173

10"x8" C.I. M.J. TEE

4" C.I. DRAINAGE LINE TO EXISTING BLDG.

12" Tee

12"x8" 90° Rad Ell

3/4" HOSE BIB @ EL. 57.50 NON POTABLE PLANT WATER

AIR HOSE CONNECTION @ EL. 57.50

10"x6" Tee

NON POTABLE PLANT WATER

3/4" H.B. & AIR CONN. @ EL. 57.50

TO FILTRATE SEAL PIT SEE SHT. 143

℄ 42" Dry Filtrate Receiver (Typ. 3)

℄ 18" Wet Filtrate Receiver (Typ. 3)

D.V. Pump No. 1

W.V. Pump No. 1

D.V. Pump No. 2

D.V. Pump No. 3

W.V. Pump No. 2

D.V. Pump No. 4

W.V. Pump No. 3

8" C.I. Blind Flg.

SEE DRAINAGE TRENCH DETAILS SHT. 173

3~ Plant Air Compressors

3/4" HOSE BIB @ EL. 57.50 NON POTABLE PLANT WATER

AIR HOSE CONN. @ EL. 57.50

3 - Filter Air Blowers

Blower & Motor

1" Inst. Air Line To Filter & Chemical Rm. Inst. Air

AIR HOSE CONN. @ EL. 57.50

3/4" Hose Bib @ El. 57.50 NON POTABLE PLANT WATER

Instrument Air Compressor & Air Dryer, See Detail F/172

3" FROM FOG DRAIN PUMP

LEVEL SENSOR

7'-0" DIA. PLANT WATER TANK (Non Potable)

6"x2" Tapping Saddle w/ Valve

6" C.I. City Water (Potable) Line El. 64.50

3 NON POTABLE PLANT Water Pumps

2"x0.S.Y.Fig.0 GATE VALVE

4"x2" TAPPING SADDLE W/ VALVE

2" GALV. GTL. CITY WATER (Potable)

Blower Air Lift Pumps See Detail Sht. 67

FOR CONSTANT HEAD TANK PIPING SEE SHT. NO. 66 to 73

Constant Head Tank Air Lift Chamber

Air Lift Chamber

Emergency Shower

WATER FOUNTAIN

WALL HEATER

REST ROOM SEE SHT. 70

Sludge Holding Tank Blower Pad See Sht. 67

Sludge Holding Tank Blower Pad See Sht. 67

Instrument Air Compressor (By Others)

Instrument Air Compressor (By Others)

EXHAUST FAN

Chemical Room For Plan & Details See Sht 118 to 121

2~ Concentrated Polymer Pumps

Concentrated Polymer Storage Tank #5

Concentrated Polymer Storage Tank #6

Diluted Polymer Use Tank #7

Diluted Ferric Chloride Use Tank #8

UP

REV. NO.	DATE	DESCRIPTION	DESIGN	C K
5	1-80	Added Seal Water Sumps And Drain Lines	W.G.W.	HJK
4	10-78	Permit Revision Indicated Hose Bibs For Non Potable Water	HJK	KRL
3	10-78	Construction Revisions Revised Vacuum Pump Layout	HJK	KRL
2	6-77	Rev. Air Piping	J.C.S.	KRL
1	3-77	Remove Water Softners Add Chem. Rm. Rev. Piping Rev. Vacuum Pumps Add Inst. Air Compressor	J.C.S.	SRS

CITY OF HOUSTON
DEPARTMENT OF PUBLIC WORKS

ALMEDA-SIMS SLUDGE DISPOSAL PLANT - 1973

FILTER ROOM PIPING PLAN BELOW ELEVATION 64.50

RECOMMENDED FOR APPROVAL:
BINKLEY & HOLMES, INC., CONSULTING ENGINEERS

APPROVED:
CHIEF ENGINEER — ASST. CHIEF ENGINEER
ASST. DIRECTORS OF PUBLIC WORKS
DIRECTOR OF PUBLIC WORKS

DESIGNED BY: M.B.J.
DRAWN BY: M. MUNIZ
CHECKED BY: M.B.J.
SCALE: 1/4" = 1'-0"
DATE: DEC. 1973
SHEET 109 OF 200 SHEETS
DRAWING NO. 18045

140

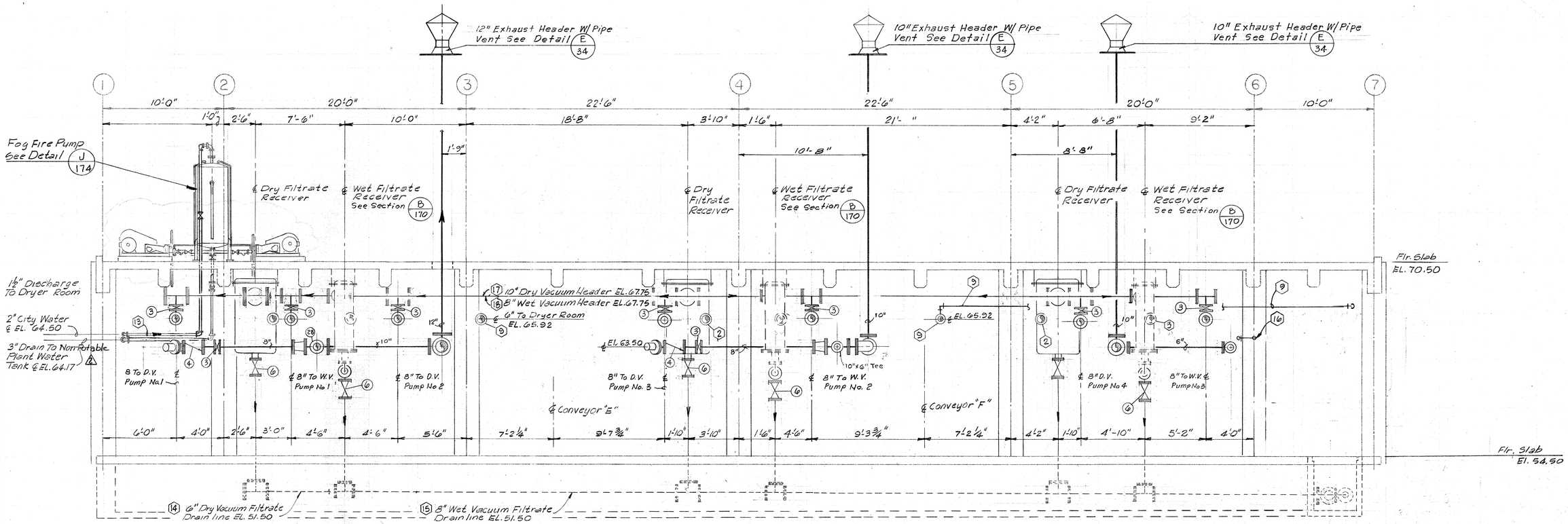

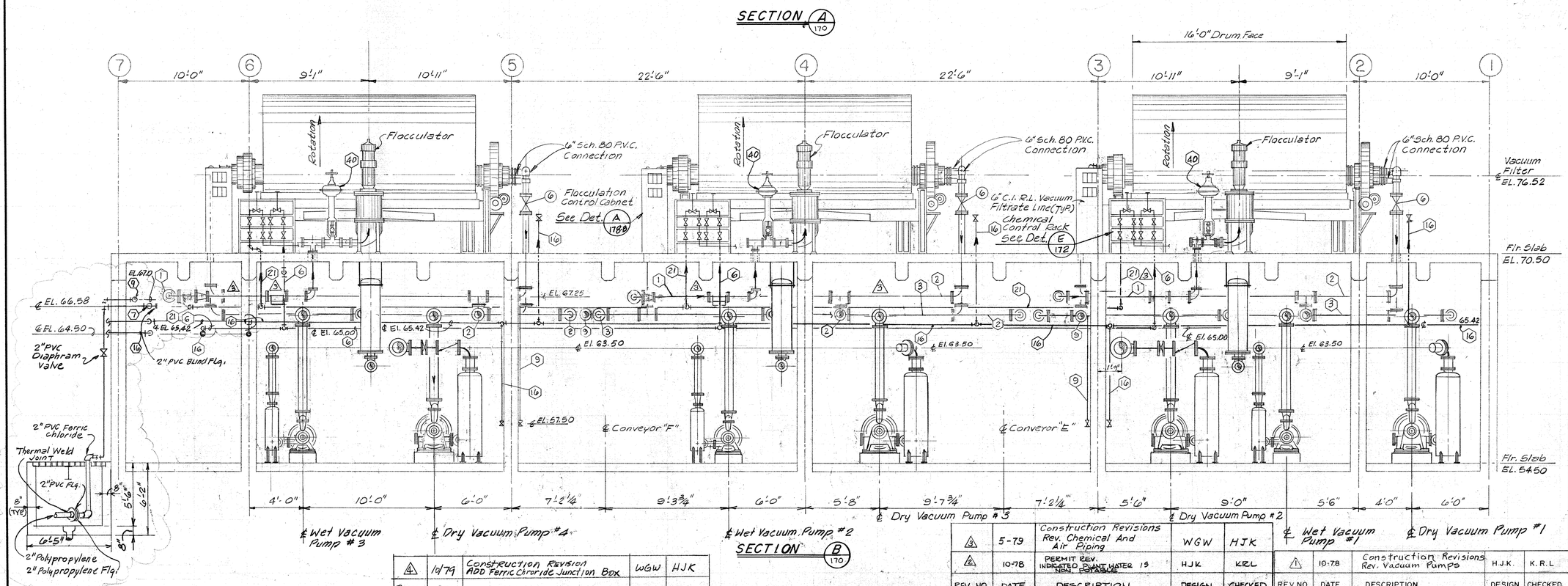

REV. NO.	DATE	DESCRIPTION	DESIGN	CHECKED
4	10/79	Construction Revision ADD Ferric Chloride Junction Box	WGW	HJK
3	5-79	Construction Revisions Rev. Chemical And Air Piping	WGW	HJK
2	10-78	PERMIT REV. INDICATED PLANT WATER IS NON POTABLE	HJK	KRL
1	10-78	Construction Revisions Rev. Vacuum Pumps	H.J.K.	K.R.L

STATE OF TEXAS — J. C. SUMAN — 40887 — REGISTERED PROFESSIONAL ENGINEER

STATE OF TEXAS — KENNETH R. LINDSEY — 31158 — REGISTERED PROFESSIONAL ENGINEER

CITY OF HOUSTON
DEPARTMENT OF PUBLIC WORKS

ALMEDA SIMS SLUDGE DISPOSAL PLANT 1973

FILTER ROOM PIPING SECTIONS

RECOMMENDED FOR APPROVAL:
Kenneth Rindsey
BINKLEY & HOLMES, INC., CONSULTING ENGINEERS

APPROVED:
CHIEF ENGINEER — ASST. CHIEF ENGINEER
ASST. DIRECTORS OF PUBLIC WORKS
DIRECTOR OF PUBLIC WORKS

DESIGNED BY: K.R.L.
DRAWN BY: M.M.
CHECKED BY: G.R.S.
SCALE: ¼"=1'-0"
DATE: Mar. 1977
SHEET 170 OF 200 SHEETS
DRAWING NO. 18045

191

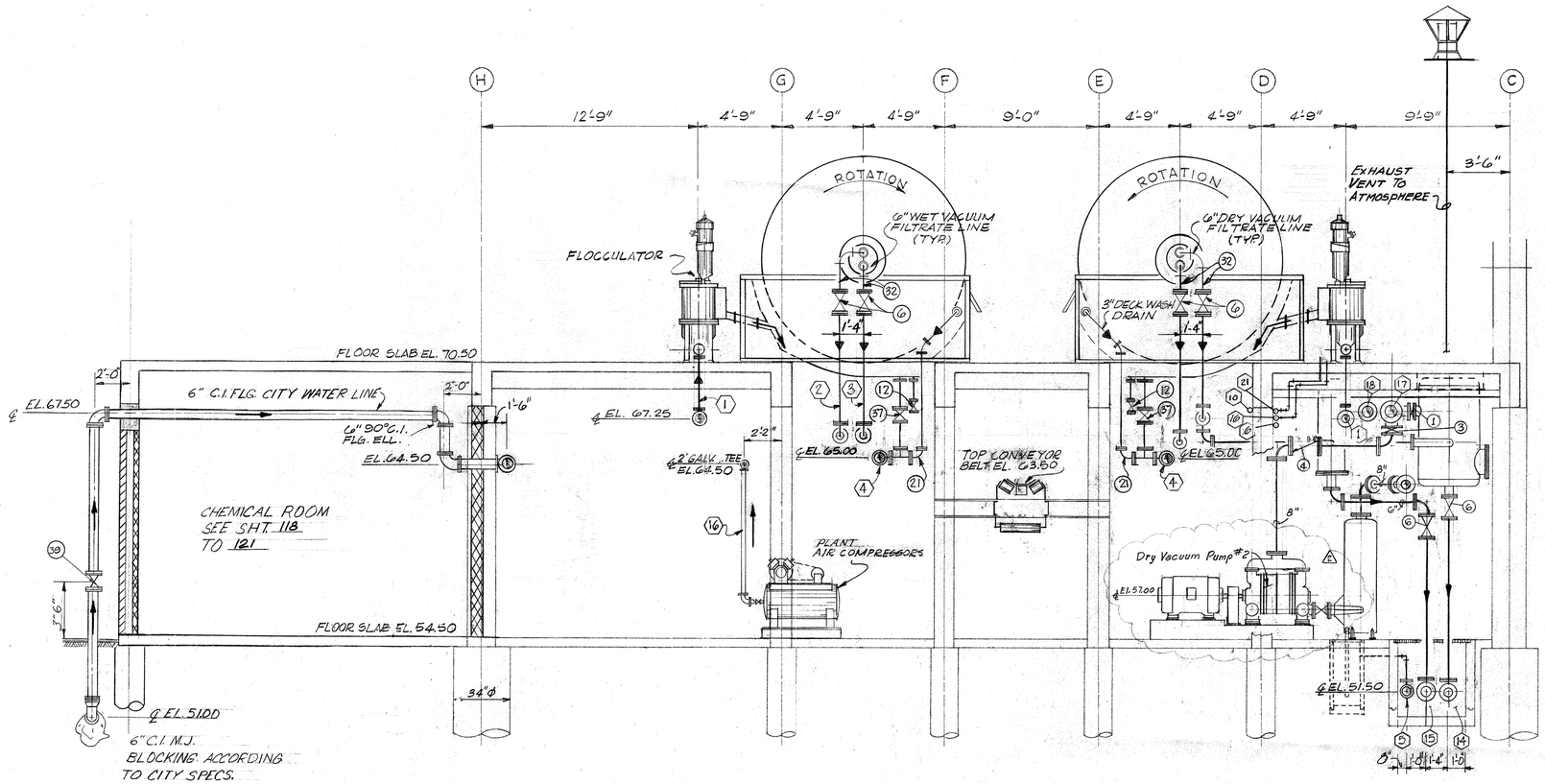

SECTION C / 171
SCALE 1/4" = 1'-0"

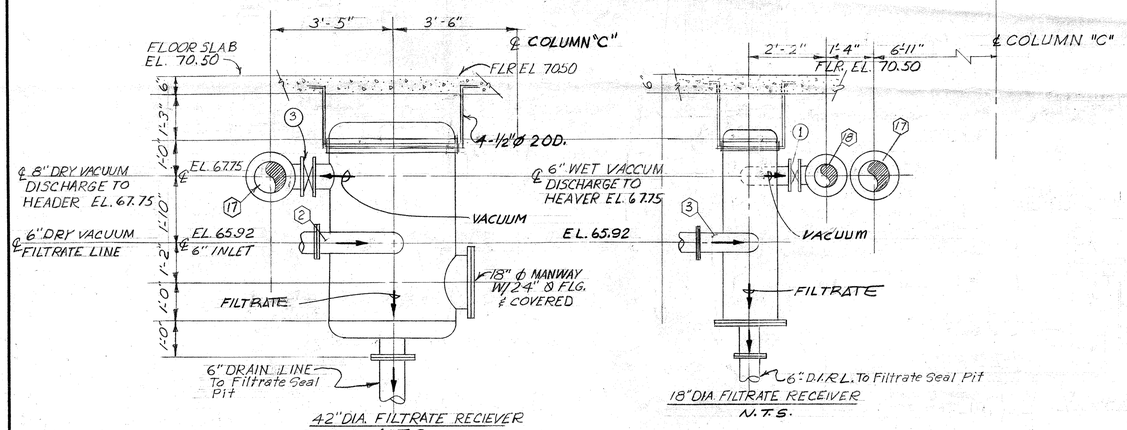

⬡ MATERIAL LEGEND

ITEM NO.	SIZE		DESCRIPTION
1	6		BUTTERFLY VALVE (WAFER TYPE W/CHAIN WHEEL)
2	10"		NON-SLAM SWING CHECK VALVE
3	8"		BUTTERFLY VALVE (WAFER TYPE W/CHAIN WHEEL)
4	8"		NON-SLAM SWING CHECK VALVE
5	6"		BUTTERFLY VALVE
6	6"		SARAN LINED FLG'D. DIAPHRAM VALVE
7	6"		NON-SLAM SWING CHECK VALVE
8	6"		O.S.&Y. FLG'D. GATE VALVE W/CHAIN WHEEL
9	6"X 3"		D.I. FLG. REDUCER
10	2"		AIR RELIEF VALVE
11			RELIEF AND UNLOADING VALVE
12	2"		WAFER BUTTERFLY VALVE W/CHAIN WHEEL
13	2"		BRASS CHECK VALVE
14	2"		BRASS GATE VALVE
15	8"		O.S.&Y. FLG'D. GATE VALVE W/CHAIN WHEEL
16	2"		O.S.&Y. FLG. GATE VALVE W/CHAIN WHEEL
17	10"		BLIND FLANGE W/ 2" N.P.T. TAP
18	8"		BLIND FLANGE W/ 2" N.P.T. TAP
19	10"X 6"		FLG'D. RED. TEE R.L.
20	8" X 6"		FLG'D. RED. TEE R.L.
21	6"X 3"		FLG'D. RED. 90° ELL R.L.
22	4"		ULTRA SONIC FLOW METER
23	3"X 2"		FLG'D. RED.
24	3"		FLG. FLOAT CONTROL VALVE
25	8"X 6"		FLG'D. REDUCER
26	8"X 5"		FLG'D REDUCER
27	6"X 5"		FLG'D REDUCER 90° ELL
28	10"X 8"		FLG'D RED. TEE
29	10"X 8"		FLG'D REDUCER R.L.
30	8"X 6"		FLG'D. C.I. RED. TEE R.L.
31	6"		FLG'D. SIDE OUTLET 90° ELL. R.L.
32	6"		FLG'D. & PLAIN END S/80 P.V.C. PIPE
33	6"X 4"		FLG'D. REDUCER
34	4"		O.S.&Y. FLG. GATE VALVE W/CHAIN WHEEL
35	4"X 3"		D.I. FLG. 90° RED. ELL
36	6"X 4"		C.I. FLG. RED TEE
37	6"		SARAN LINED DIAPHRAM VALVE W/CHAIN WHEEL
38	6"X 3"		D.I. FLG. RED. 90° ELL.
39	6"		O.S.&Y. GATE VALVE
40	3"		SLUDGE FEED RATE CONTROL VALVE

⬡ LINE SCHEDULE

NO.	DESCRIPTION	ELEVATION
①	6" 3" D.I. FLG. RAW SLUDGE FEED LINE	67.25
②	6" D.I. FLD. DRY VACUUM FILTRATE LINE D.I.R.L.	65.92 & 67.25
③	6" D.I. FLD. WET VACUUM FILTRATE LINE D.I.R.L. Δ	65.92 & 67.25
④	6" & 8" VACUUM FILTER DRAIN LINE D.I. FLG	65.00
⑤	4" SEAL WATER DRAIN LINE 4" D.I. FLG & 3" GALV	51.50 & 54.68
⑥	2" SCH. 80 P.V.C. DILUTED FERRIC CHLORIDE LINE	65.00, 65.92 & 67.42
⑦	2", 1", SCH. 80 P.V.C. CONCENTRATED FERRIC CHLORIDE LINE	66.58
⑧		
⑨	8", 6", 4" D.I. FLG. 3", 2", 1" GALV. PLANT WATER LINE *	67.00, 65.92
⑩	INSTRUMENT AIR	64.50 & 67.83±
⑪	FILTER BLOWER AIR LINE - 2" GALV, 4" D.I. FLG & 6" DI FLG.	64.00 & 66.00
⑫		
⑬	2" GALV. CITY WATER LINE Δ	63.50 & 64.50
⑭	6" DRY VACUUM FILTRATE DRAIN HEADER D.I.R.L.	51.50
⑮	8" WET VACUUM FILTRATE DRAIN HEADER D.I.R.L.	51.50
⑯	2" & 1" GALV. PLANT AIR	64.50 & 67.00
⑰	10" DRY VACUUM HEADER	67.75
⑱	8" WET VACUUM HEADER	67.75
⑲	3" GALV. SEAL WATER LINE	64.00 & 65.00
⑳	3" SCH 80 P.V.C. CONCENTRATED POLYMER LINE	66.58 & 66.00
㉑	3" & 2" P.V.C. DILUTED POLYMER	55.50, 66.58 & 67.83

* NON-POTABLE WATER

REV NO.	DATE	DESCRIPTION	DESIGN	CHECK
Δ	11-78	ADDENDA REVISION, ITEMS 2,3,4,14 & 15 CHANGED TO D.I.R.L.	H.J.K.	K.R.L.
Δ	10-78	CONSTRUCTION REVISION REVISED VACUUM PUMP LAYOUT	H.J.K.	K.R.L.
Δ	3-77	REVISED FILTRATE RECEIVERS & PIPING - REMOVE PUMPS	J.C.S.	S.R.S.

CITY OF HOUSTON
DEPARTMENT OF PUBLIC WORKS

ALMEDA-SIMS SLUDGE DISPOSAL PLANT-1973

FILTER ROOM PIPING SECTIONS

RECOMMENDED FOR APPROVAL:
BINKLEY & HOLMES, INC., CONSULTING ENGINEERS

APPROVED:
CHIEF ENGINEER — ASST. CHIEF ENGINEER
ASST. DIRECTORS OF PUBLIC WORKS
DIRECTOR OF PUBLIC WORKS

DESIGNED BY: M. B. J.
DRAWN BY: M. MUNIZ
CHECKED BY: M. B. J.
SCALE: AS NOTED
DATE: DEC. 1973
SHEET 171 OF 200 SHEETS
DRAWING NO. 18045

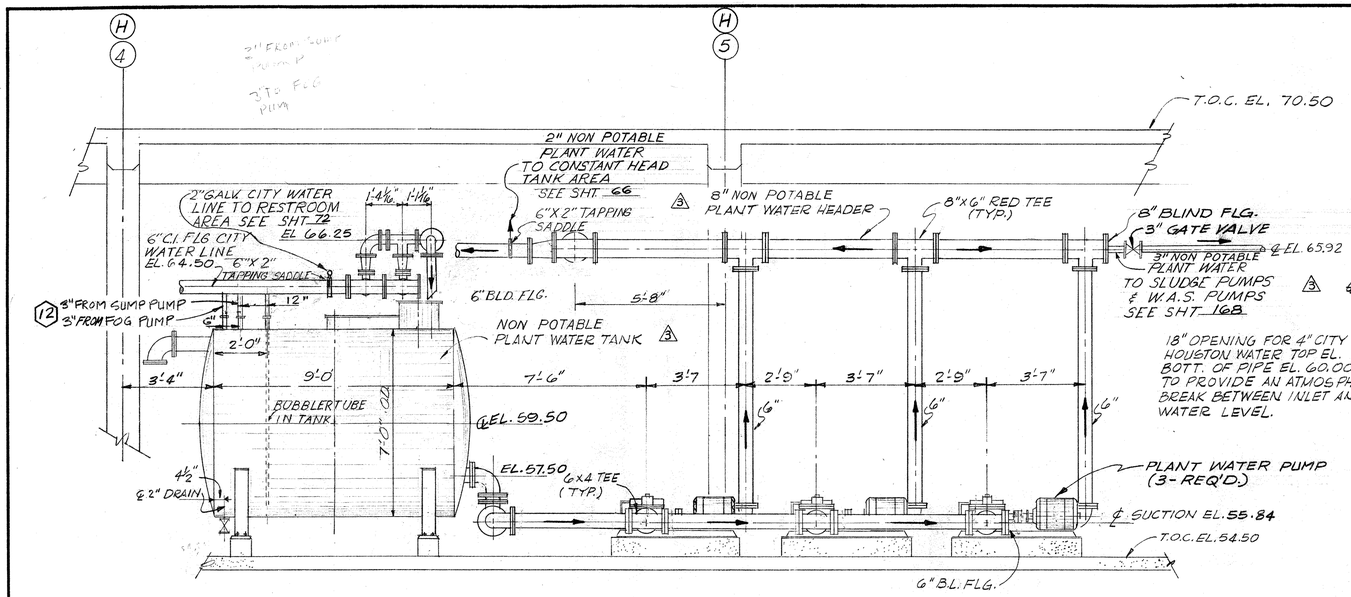

SECTION (D/172)
SCALE 3/8"=1'-0"

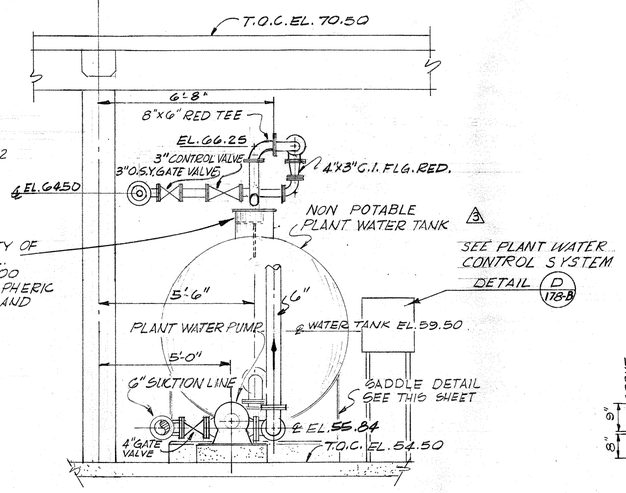

(NON-POTABLE WATER)
PLANT WATER TANK & PUMPS DETAILS (A/172)
SCALE: 3/8"=1'-0"

SECTION (E/172)
(NON-POTABLE)
PLANT WATER TANK DETAIL
SCALE: 3/8"=1'-0"

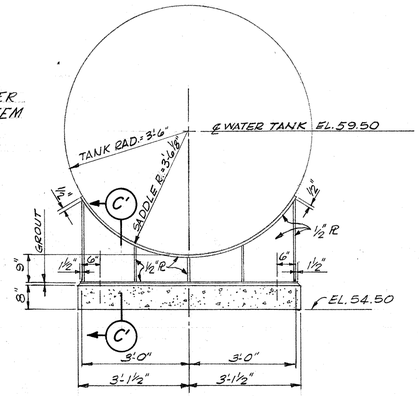

SADDLE DETAIL FOR NON-POTABLE WATER TANK (B/172)
SCALE: 1/2"=1'-0"

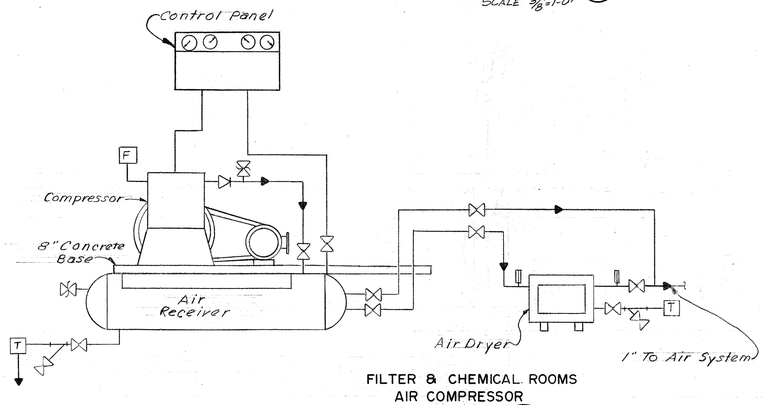

FILTER & CHEMICAL ROOMS
AIR COMPRESSOR
SCHEMATIC (G/172)

LEGEND
- Stop Valve
- Check Valve
- Safety Valve
- Strainer
- T Trap
- F Filter
- Temperture Indicator
- Pipe Drain

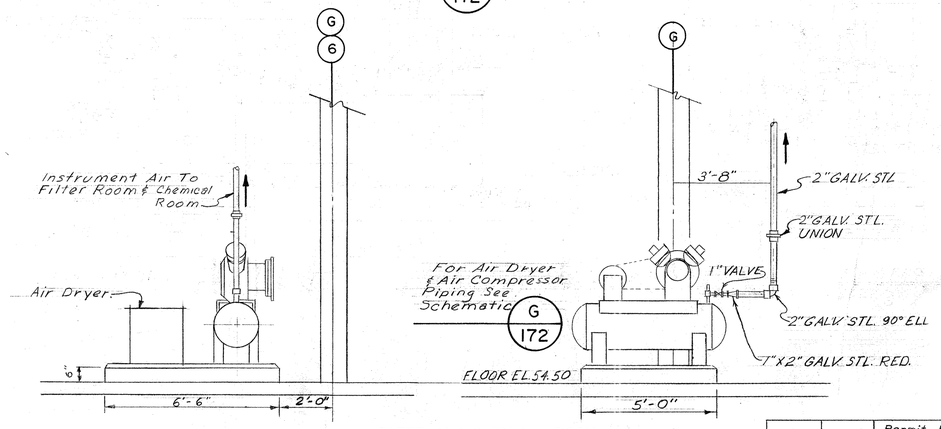

FILTER AND CHEMICAL ROOM
INSTRUMENT AIR COMPRESSOR
DETAIL (F/172)
SCALE: 3/8"=1'-0"

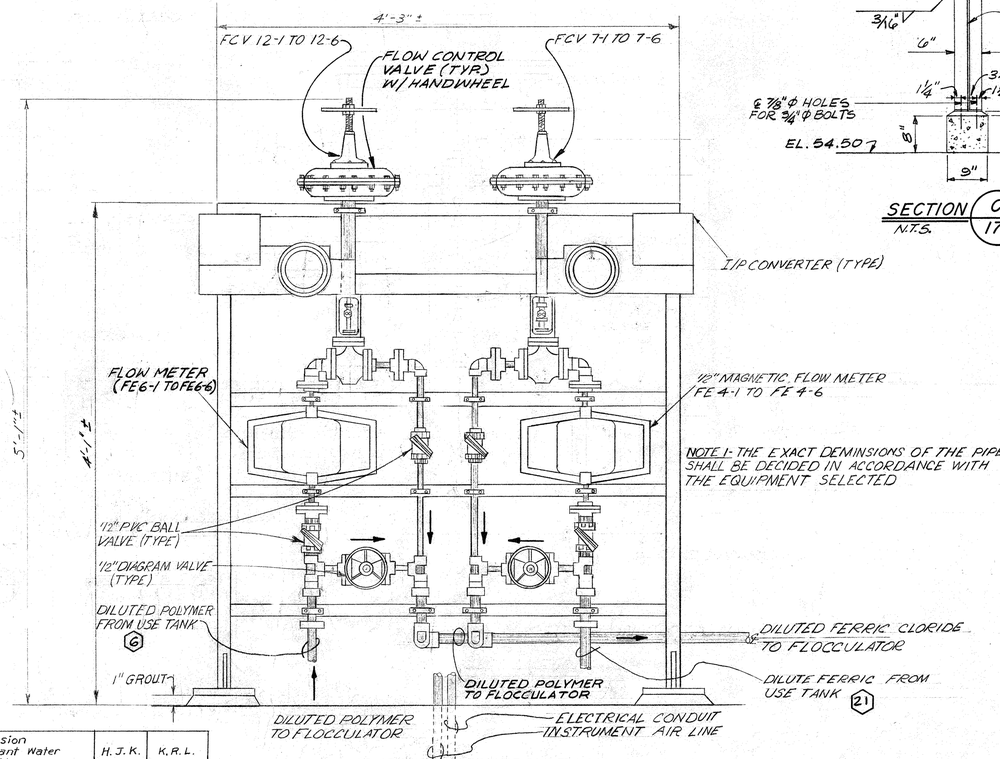

CHEMICAL CONTROL RACK
DETAIL (E/172)
SCALE: 3/8"=1'-0"

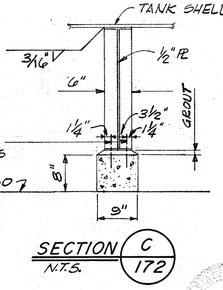

SECTION (C/172)
N.T.S.

REV. NO.	DATE	DESCRIPTION	DESIGN	CHECKED
3	11-78	Permit Revision Indicated Plant Water Is Non Potable	H.J.K.	K.R.L.
2	6-77	Added Schematic Rev. Detail "F" 172	J.C.S.	K.R.L.
1	3-77	ADD CHEMICAL RACK ADD FLOW ARROWS ADD INST. AIR COMPRESSOR	J.C.S.	S.R.S.

CITY OF HOUSTON
DEPARTMENT OF PUBLIC WORKS

ALMEDA-SIMS SLUDGE DISPOSAL PLANT-1973

FILTER ROOM PIPING SECTIONS AND DETAILS

RECOMMENDED FOR APPROVAL:
BINKLEY & HOLMES, INC., CONSULTING ENGINEERS

APPROVED:
CHIEF ENGINEER — ASST. CHIEF ENGINEER
ASST. DIRECTORS OF PUBLIC WORKS
DIRECTOR OF PUBLIC WORKS

DESIGNED BY: M. B. J.
DRAWN BY: M. MUNIZ
CHECKED BY: M. B. J.
SCALE: AS NOTED
DATE: DEC. 1973
SHEET 172 OF 200 SHEETS
DRAWING NO. 10045

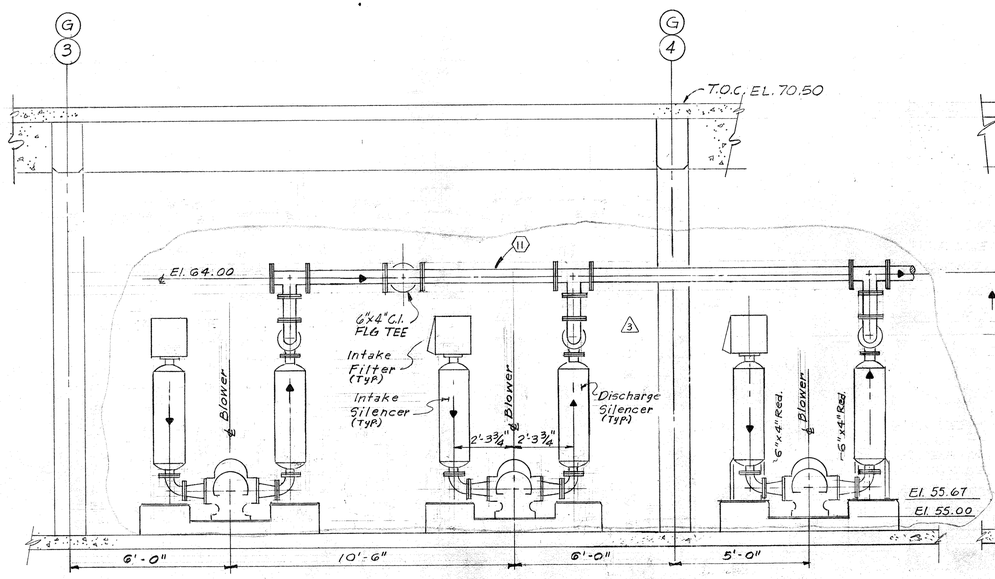

FILTER AIR BLOWERS

SECTION (H/173) 3

SCALE: 3/8"=1'-0"

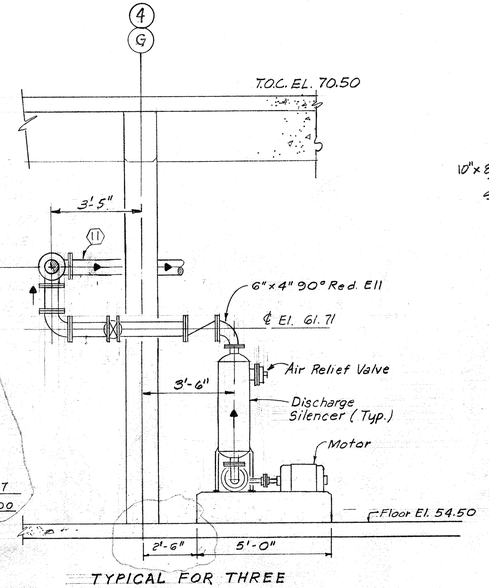

TYPICAL FOR THREE

SECTION (J/173) 3

SCALE: 3/8"=1'-0"

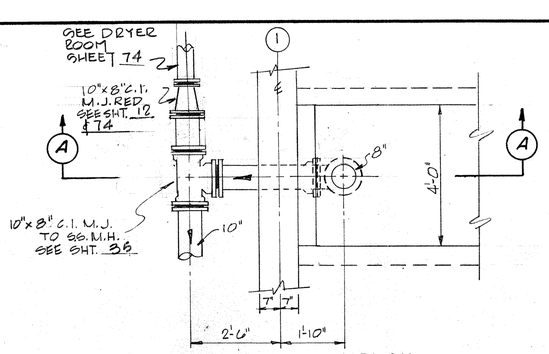

PLAN

SCALE ½"=1'-0"

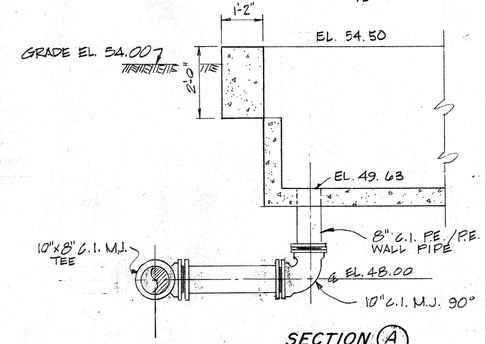

SECTION (A)

PIPE TRENCH DRAIN

SCALE ½"=1'-0"

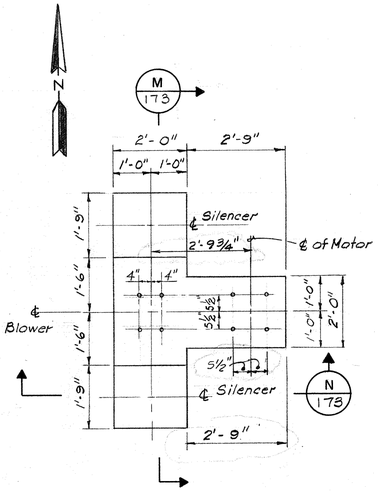

FILTER AIR BLOWER BASE

PLAN

Scale: 1/2"=1'-0" 3

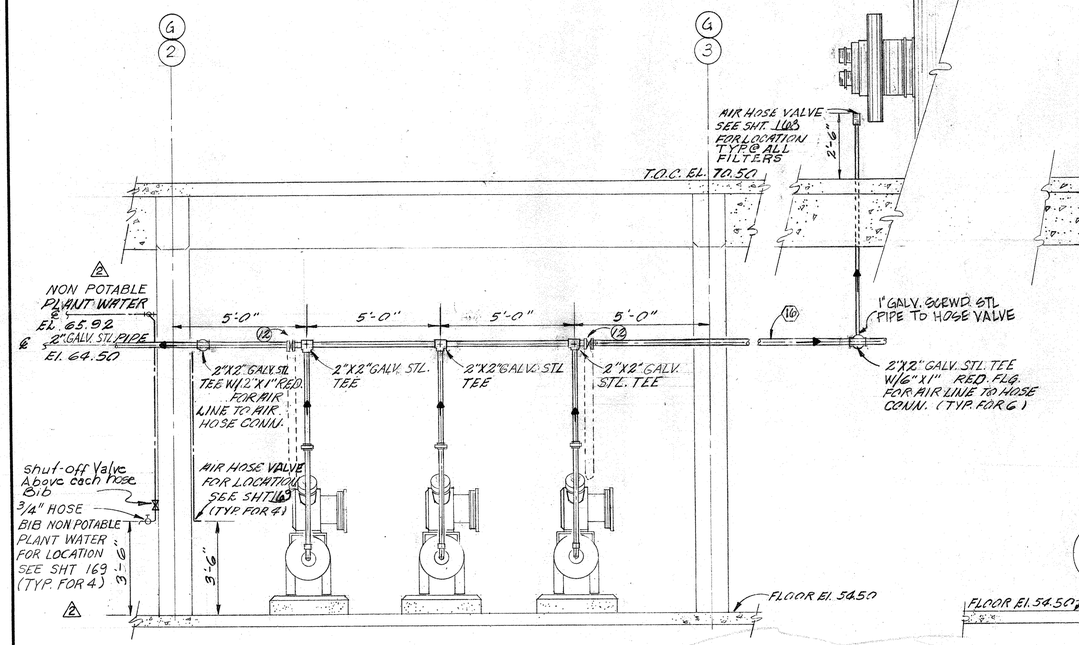

PLANT AIR - COMPRESSORS

SECTION (K/173)

SCALE: 3/8"=1'-0"

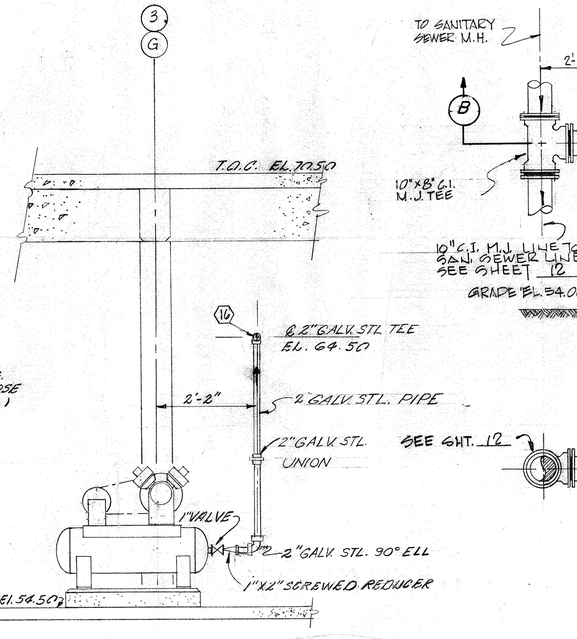

SECTION (L/173)

SCALE: 3/8"=1'-0"

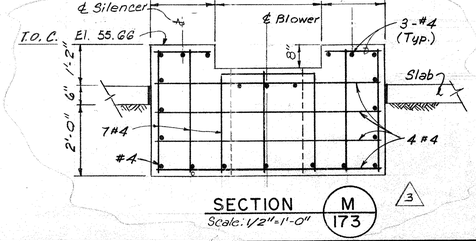

SECTION (M/173)

Scale: 1/2"=1'-0" 3

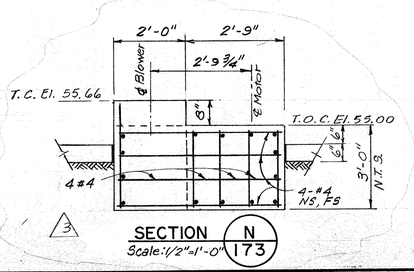

SECTION (N/173)

Scale: 1/2"=1'-0" 3

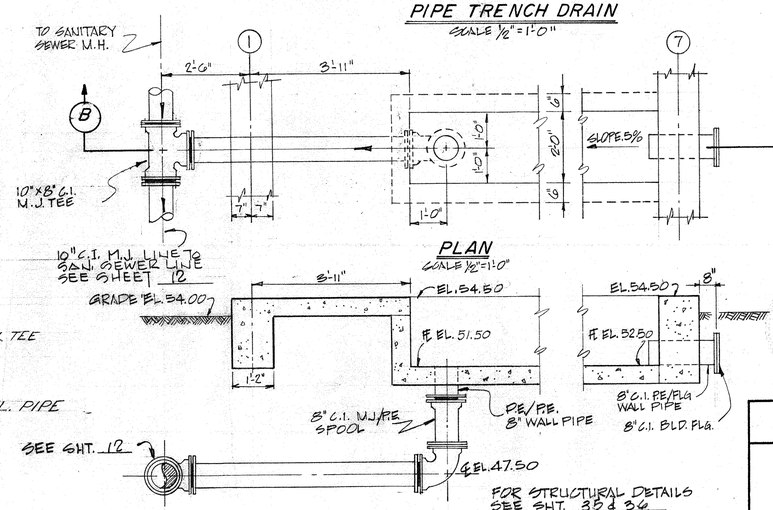

SECTION (B)

DRAINAGE TRENCH DETAILS

SCALE ½"=1'-0"

CITY OF HOUSTON
DEPARTMENT OF PUBLIC WORKS

ALMEDA-SIMS SLUDGE DISPOSAL PLANT-1973

FILTER ROOM PIPING SECTIONS AND DETAILS

RECOMMENDED FOR APPROVAL:
BINKLEY & HOLMES, INC., CONSULTING ENGINEERS

APPROVED:
CHIEF ENGINEER — ASST. CHIEF ENGINEER
ASST. DIRECTORS OF PUBLIC WORKS
DIRECTOR OF PUBLIC WORKS

REV. NO	DATE	DESCRIPTION	DESIGN	CHECKED
3	6-79	Construction Revision Blower Foundations	A.C.B.	H.J.K.
2	11-78	Permit Revision Indicated Plant Water To Be Non Potable	HJK	KRL
1	3-77	ADD FLOW ARROWS REV. FILTER AIR BLOWERS	JCS	SRS

DESIGNED BY: M.B.J.
DRAWN BY: M. WHITE
CHECKED BY: M.B.J.
SCALE: AS NOTED
DATE: DEC. 1973
SHEET 173 OF 200 SHEETS
DRAWING NO. 18045

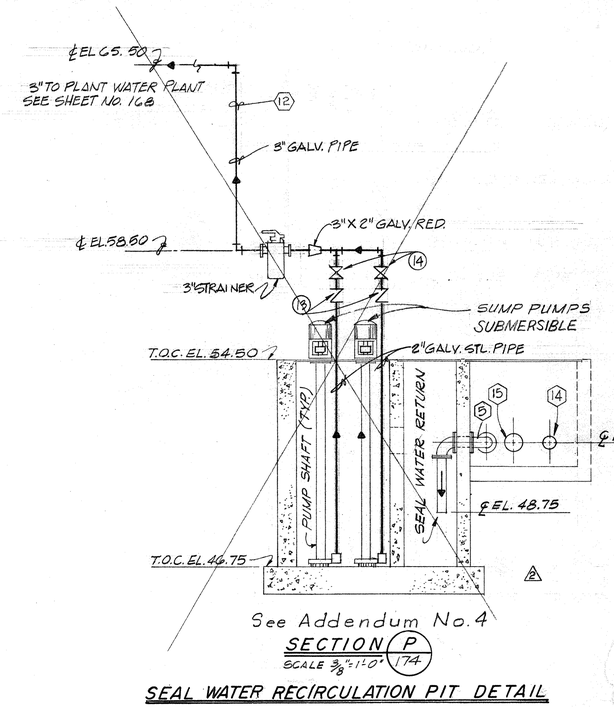

See Addendum No. 4

SECTION (P/174)

SCALE 3/8"=1'-0"

SEAL WATER RECIRCULATION PIT DETAIL

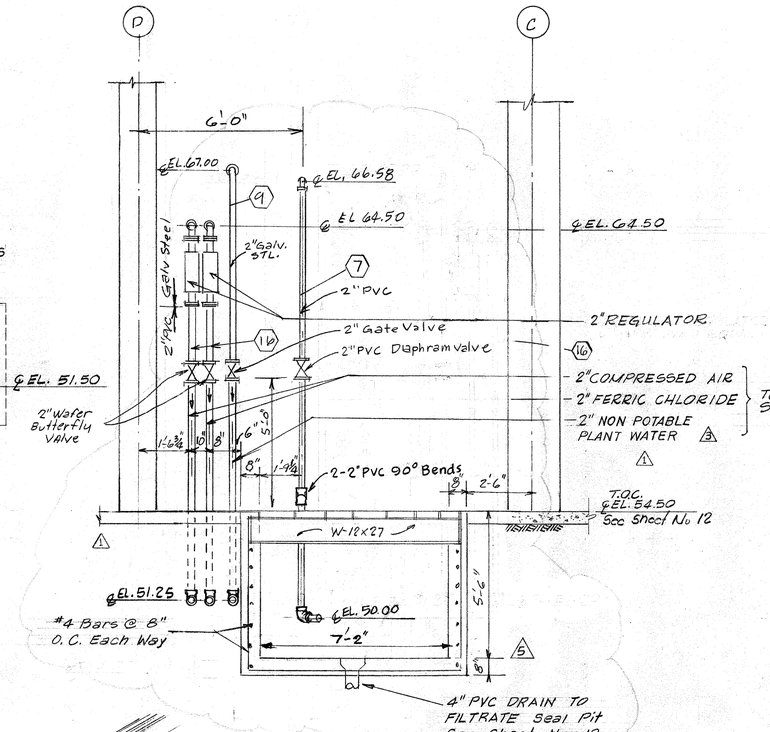

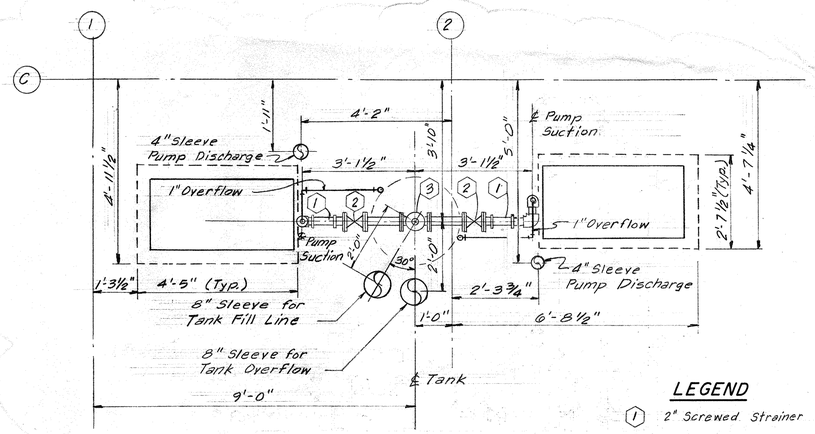

PLAN

LEGEND

1. 2" Screwed Strainer
2. 2" Flg. Gate Valve
3. 2" Flg. Cross
4. 2" Ball Valve

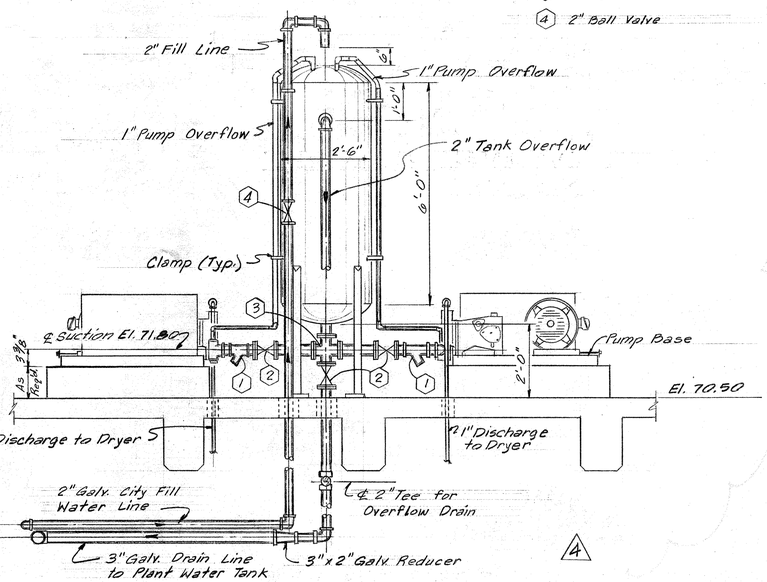

ELEVATION

FOG FIRE PUMP DETAIL (J/174)

Scale: None

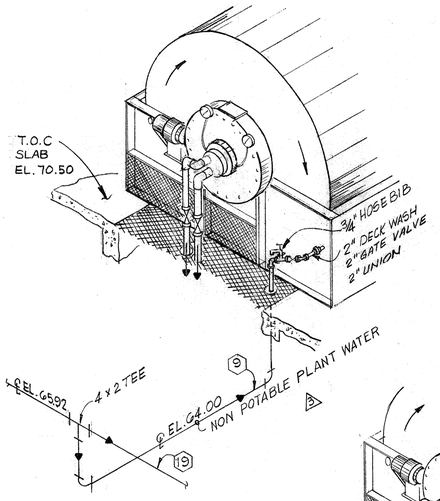

DETAIL (A) 2" DECK WASH LINE

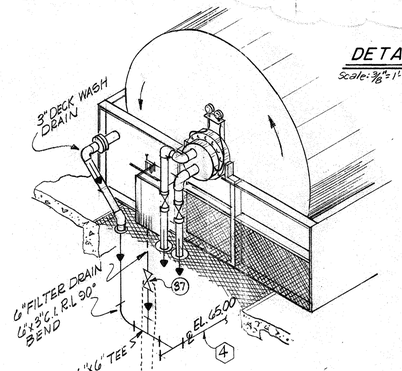

DETAIL (F) FILTER DRAIN LINE

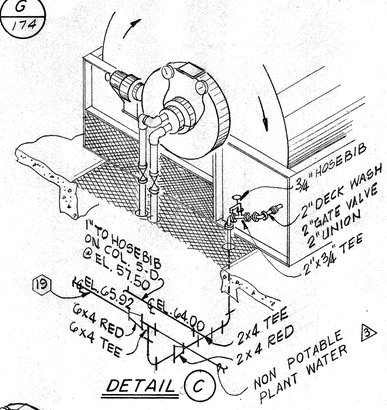

DETAIL (C)

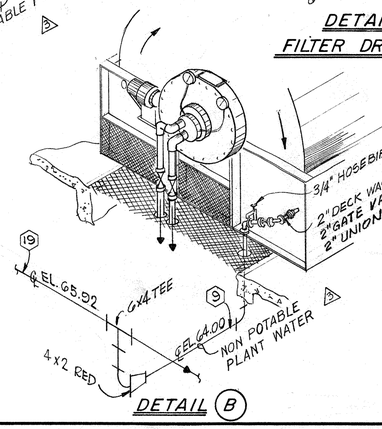

DETAIL (B)

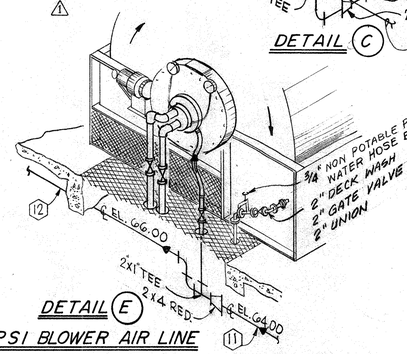

DETAIL (E) 3 PSI BLOWER AIR LINE

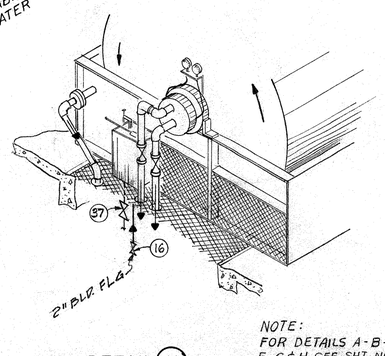

DETAIL (H)

NOTE:
FOR DETAILS A-B-C
F-G & H SEE SHT NO. 112.

REV. NO.	DATE	DESCRIPTION	DESIGN	CHECKED
5	9-79	Construction Revisions Revised Detail "G" Added Ferric Chloride Line Junction Box	W.G.W.	H.J.K.
4	1-79	Construction Revisions Relocated Fog Pump And Surge Tank Added One Fog Pump	W.G.W.	H.J.K.
3	10-78	Permit Revision Indicated Non Potable Plant Water	HJK	KRL
2	11-78	Addendum Revision Delete Seal Water Return System	HJK	KRL
1	3-77	REV. PIPING ADD FLOW ARROWS ADD FOG PUMP	JCS	SRS

CITY OF HOUSTON
DEPARTMENT OF PUBLIC WORKS

ALMEDA-SIMS
SLUDGE DISPOSAL
PLANT-1973

FILTER ROOM
PIPING SECTIONS
& DETAILS

RECOMMENDED FOR APPROVAL:
Paul R. Holmes
BINKLEY & HOLMES, INC., CONSULTING ENGINEERS

APPROVED:
Walter Williams
CHIEF ENGINEER — ASST. CHIEF ENGINEER
ASST. DIRECTORS OF PUBLIC WORKS
E.B. Cape
DIRECTOR OF PUBLIC WORKS

DESIGNED BY: M. B. J.
DRAWN BY: M. MUNIZ
CHECKED BY: M. B. J.
SCALE: AS NOTED
DATE: DEC. 1973
SHEET 174 OF 200 SHEETS
DRAWING NO. 10045

145

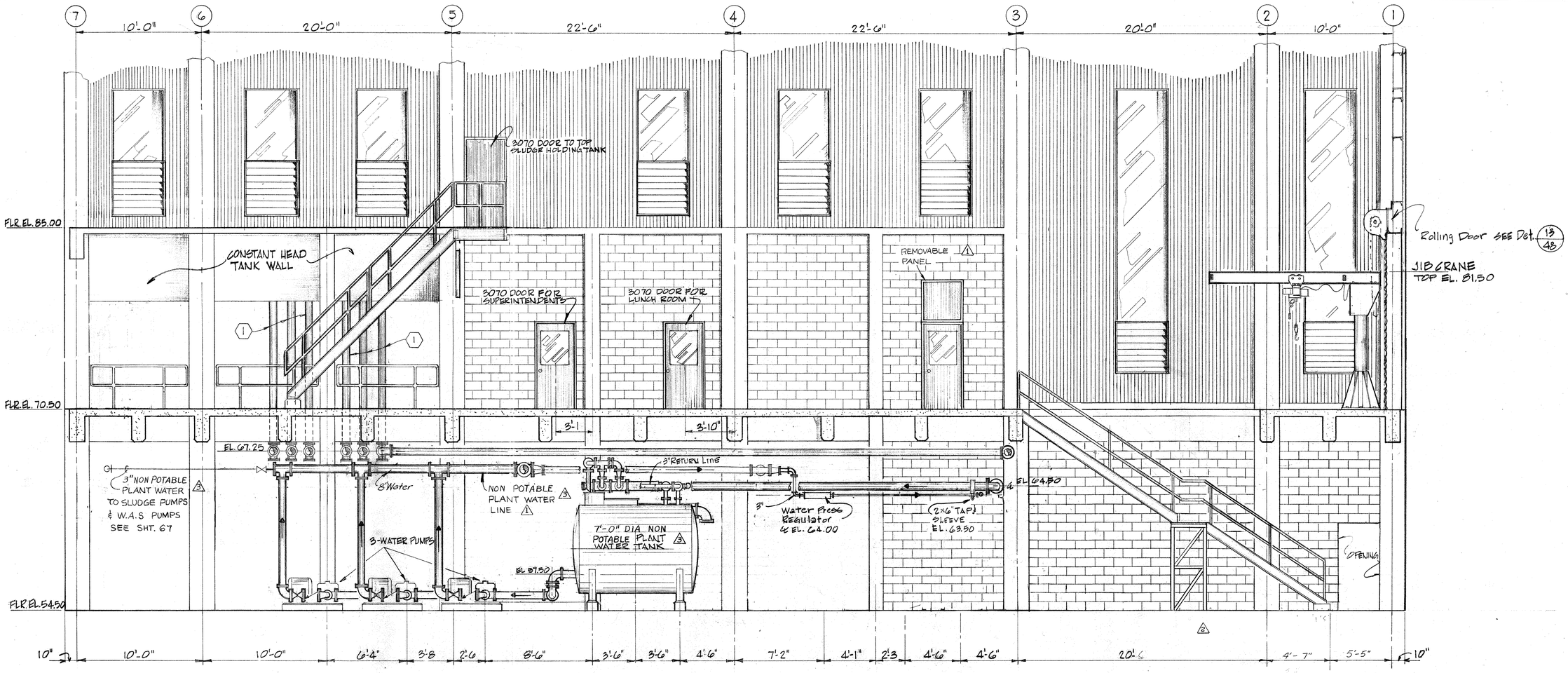

SECTIONAL ELEVATION @ COL. LINE "H" NORTH

SECTION R/73

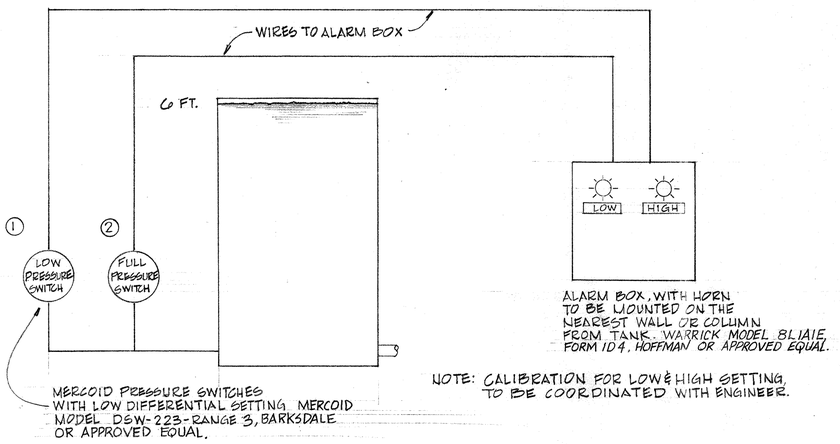

FOG SPRAY LEVEL ALARM SCHEMATIC

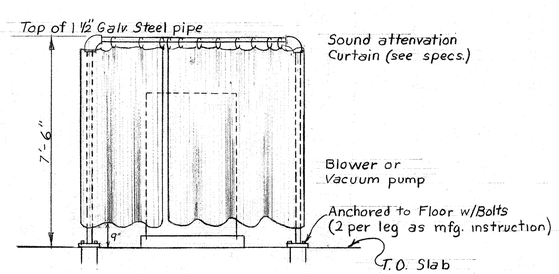

SECTION A-A

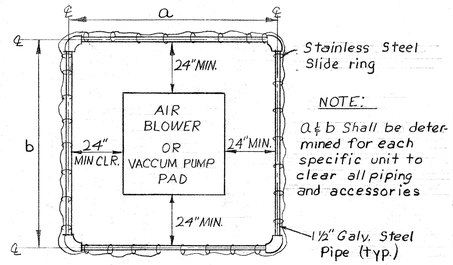

SOUND ATTENUATION DETAIL

REV. NO.	DATE	DESCRIPTION	DESIGN	CHECKED
2	6-77	Rev Staircase	J.C.S	K.R.L
1	3-77	ADD FLOW ARROWS REV. PIPING ADD MCC ROOM	JCS	SRS
3	10-78	Permit Revision Indicated Plant Water Is Non Potable	HJK	KRL

CITY OF HOUSTON
DEPARTMENT OF PUBLIC WORKS

ALMEDA-SIMS SLUDGE DISPOSAL PLANT-1973

FILTER ROOM PIPING SECTION

RECOMMENDED FOR APPROVAL:
BINKLEY & HOLMES, INC., CONSULTING ENGINEERS

APPROVED:
CHIEF ENGINEER — ASST. CHIEF ENGINEER
ASST. DIRECTORS OF PUBLIC WORKS
DIRECTOR OF PUBLIC WORKS

DESIGNED BY: M. B. J.
DRAWN BY: M. MUNIZ
CHECKED BY: M. B. J.
SCALE: 1/4" = 1'-0"
DATE: DEC. 1973
SHEET 175 OF 200 SHEETS
DRAWING NO. 18045

LAYOUT, ALTERNATE NO. 1

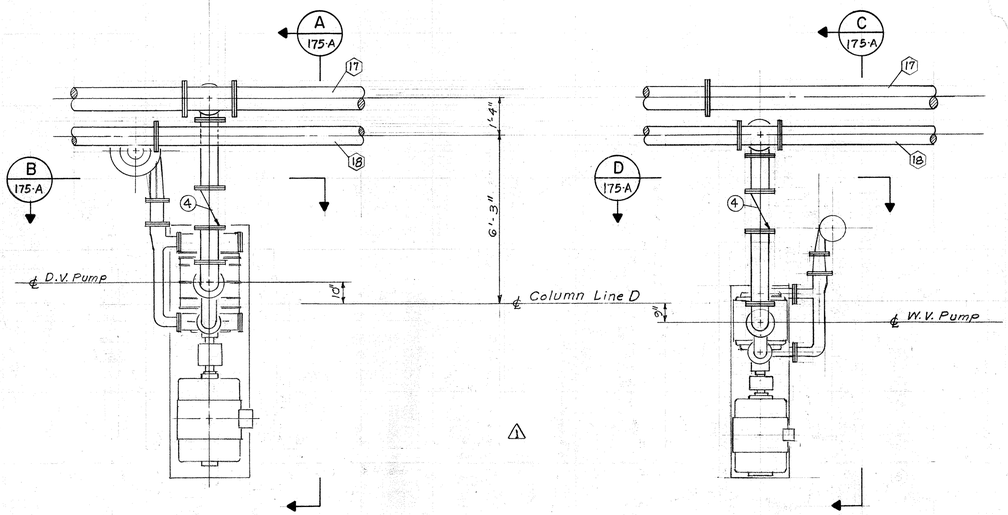

PLAN

PLAN

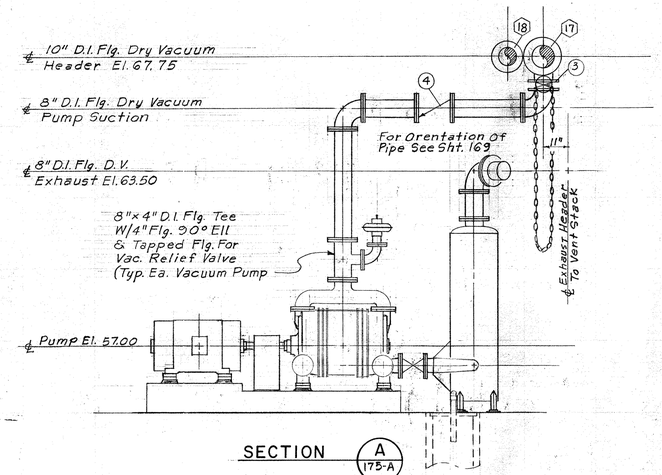

SECTION A 175-A

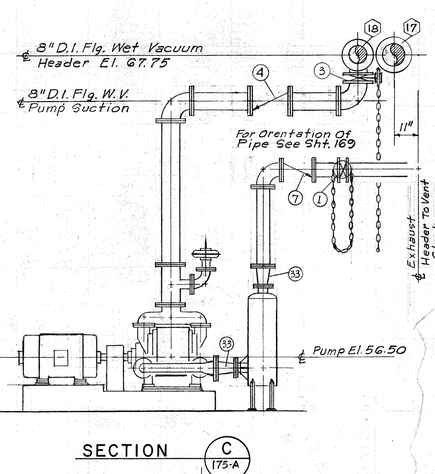

SECTION C 175-A

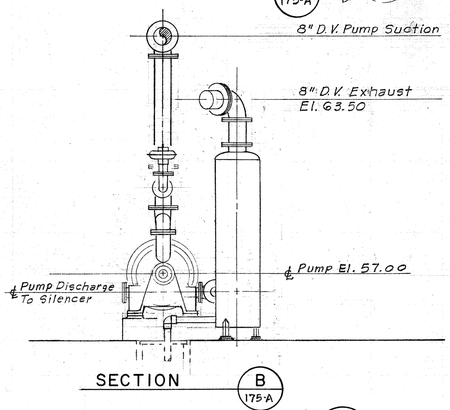

SECTION B 175-A

DRY VACUUM PUMP DETAIL
LIQUID RING PUMP
M 175-A

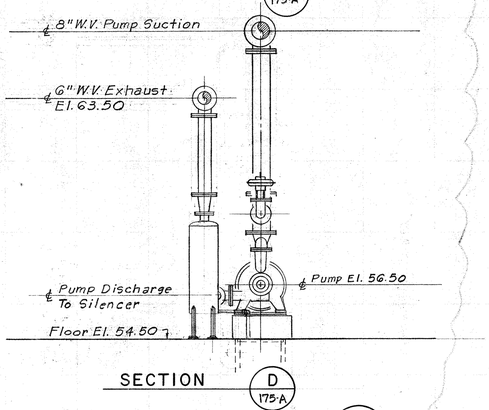

SECTION D 175-A

WET VACUUM PUMP DETAIL
LIQUID RING PUMP
N 175-A

LAYOUT ALTERNATE NO. 2

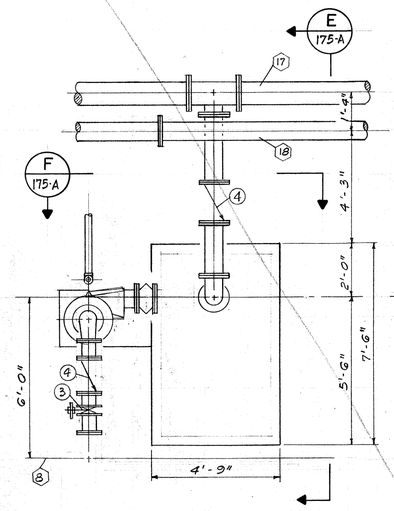

PLAN

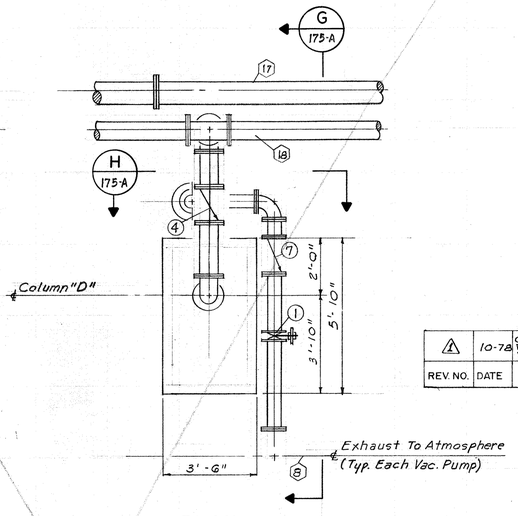

PLAN

⚠	10-78	CONSTRUCTION REV. REV. VACUUM PUMP LAYOUT DELETE ALTERNATE NO. 2	H.J.K.	K.R.L.
REV. NO.	DATE	DESCRIPTION	DESIGN	CK'ED.

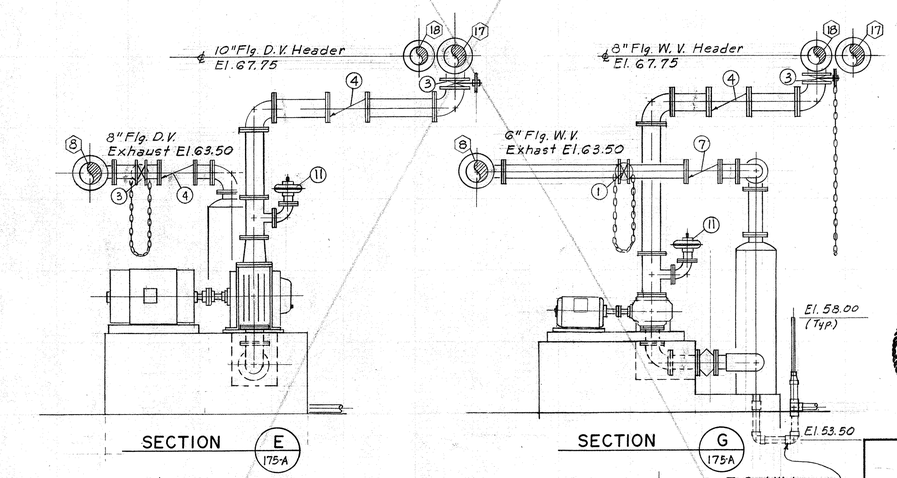

SECTION E 175-A

SECTION G 175-A

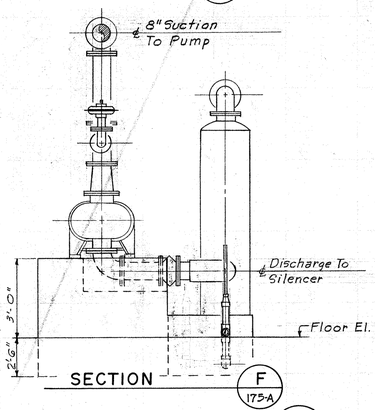

SECTION F 175-A

DRY VACUUM PUMP DETAIL
ROTARY POSITIVE
DISPLACEMET PUMP
P 175-A

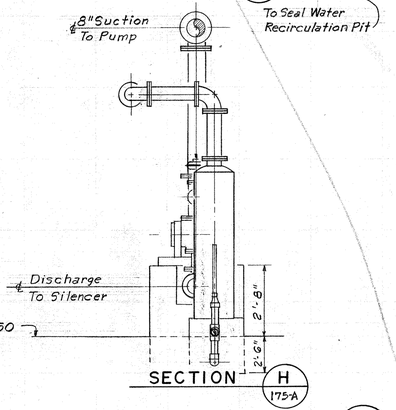

SECTION H 175-A

WET VACUUM PUMP DETAIL
ROTARY POSITIVE
DISPLACEMENT PUMP
Q 175-A

STATE OF TEXAS — KENNETH R. LINDSEY — 31158 — REGISTERED PROFESSIONAL ENGINEER

STATE OF TEXAS — J. C. SUMAN — 40882 — REGISTERED PROFESSIONAL ENGINEER

CITY OF HOUSTON
DEPARTMENT OF PUBLIC WORKS

ALMEDA-SIMS
SLUDGE DISPOSAL
PLANT-1973

FILTER ROOM
PIPING SECTIONS

RECOMMENDED FOR APPROVAL:
Kenneth R. Lindsey
BINKLEY & HOLMES, INC., CONSULTING ENGINEERS

APPROVED:

CHIEF ENGINEER — ASST. CHIEF ENGINEER

ASST. DIRECTORS OF PUBLIC WORKS

DIRECTOR OF PUBLIC WORKS

DESIGNED BY: K.R.L.
DRAWN BY: E. Thomas
CHECKED BY: S.R.S.
SCALE: 3/8" = 1'-0"
DATE: March 1977
SHEET 175-A OF 200 SHEETS
DRAWING NO. 18045

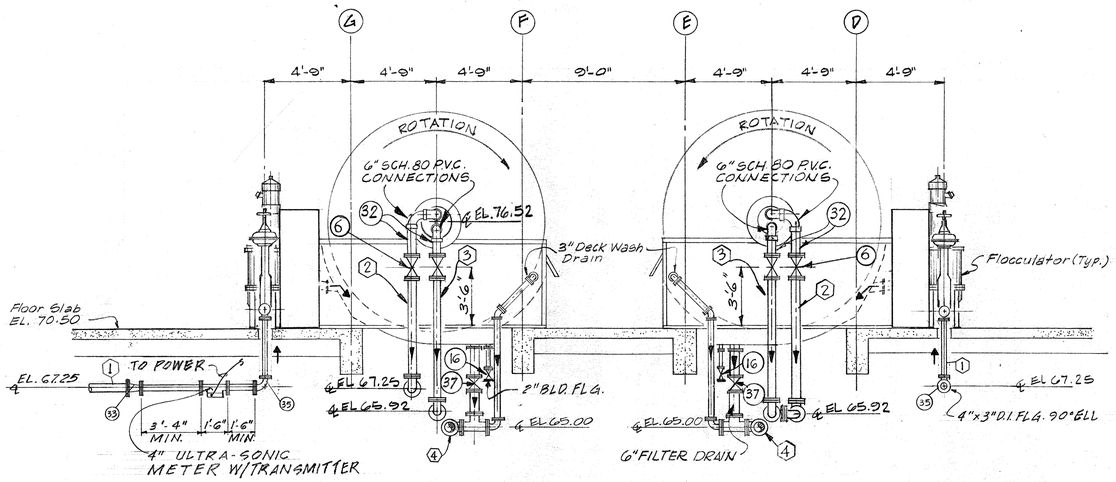

⚠ EAST ELEVATION

SCALE 1/4"=1'-0"

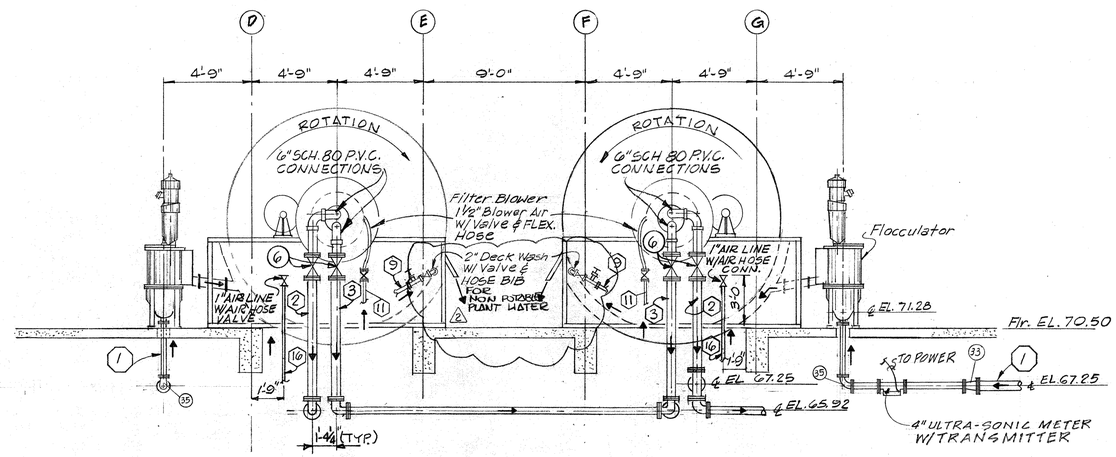

⚠ WEST ELEVATION

SCALE 1/4"=1'-0"

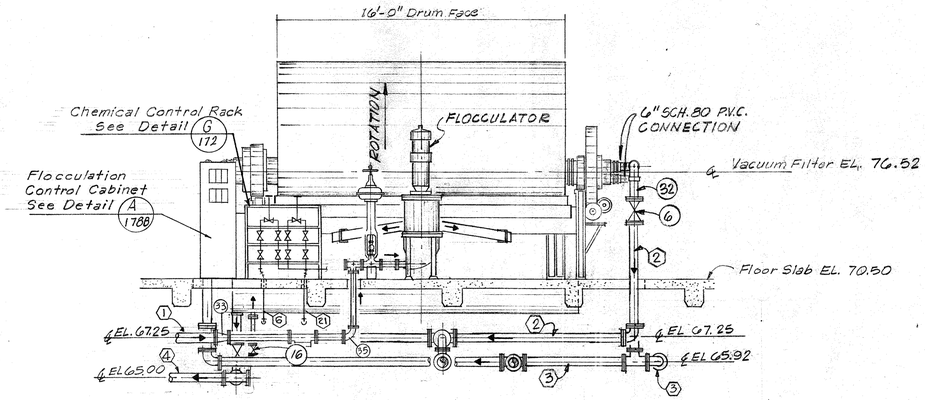

⚠ ELEVATION @ FEED SIDE

SCALE 1/4"=1'-0"

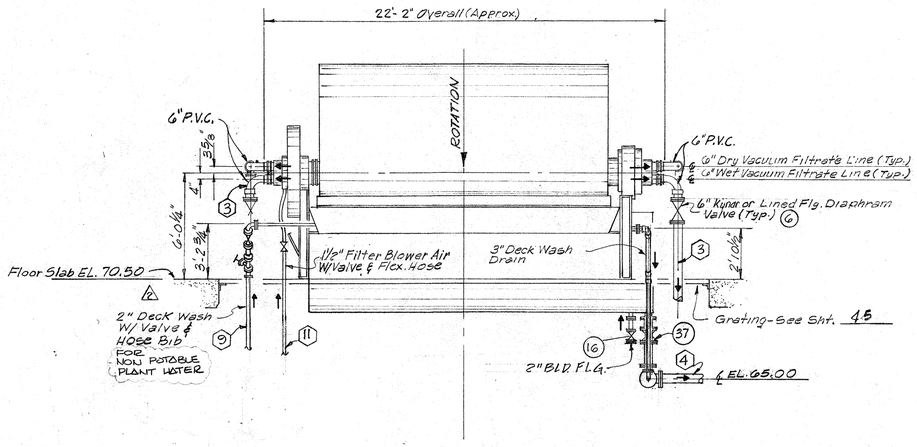

⚠ ELEVATION @ DISCHARGE SIDE

SCALE 1/4"=1'-0"

REV. NO.	DATE	DESCRIPTION	DESIGN	CHECKED
⚠	10-78	PERMIT REVISIONS INDICATED PLANT WATER AS NON POTABLE	HJK	KRL
⚠	3-77	REV. PIPING ADD FLOW ARROWS	J.C.S	S.R.S

JAMES A. BINKLEY 34262 STATE OF TEXAS REGISTERED PROFESSIONAL ENGINEER

PAUL R. HOLMES 27638 STATE OF TEXAS REGISTERED PROFESSIONAL ENGINEER

CITY OF HOUSTON
DEPARTMENT OF PUBLIC WORKS

ALMEDA-SIMS SLUDGE DISPOSAL PLANT-1973

TYPICAL ELEVATIONS OF FILTERS

RECOMMENDED FOR APPROVAL:
Paul R. Holmes
BINKLEY & HOLMES, INC., CONSULTING ENGINEERS

APPROVED:
Walter Williams — CHIEF ENGINEER — ASST. CHIEF ENGINEER
Jimmie D. Schmidt — ASST. DIRECTORS OF PUBLIC WORKS
E. B. Pape — DIRECTOR OF PUBLIC WORKS

DESIGNED BY: M. B. J.
DRAWN BY: L. MUNIZ
CHECKED BY: M. B. J.
SCALE: 1/4" = 1'-0"
DATE: DEC. 1973
SHEET 176 OF 200 SHEETS
DRAWING NO. 10045

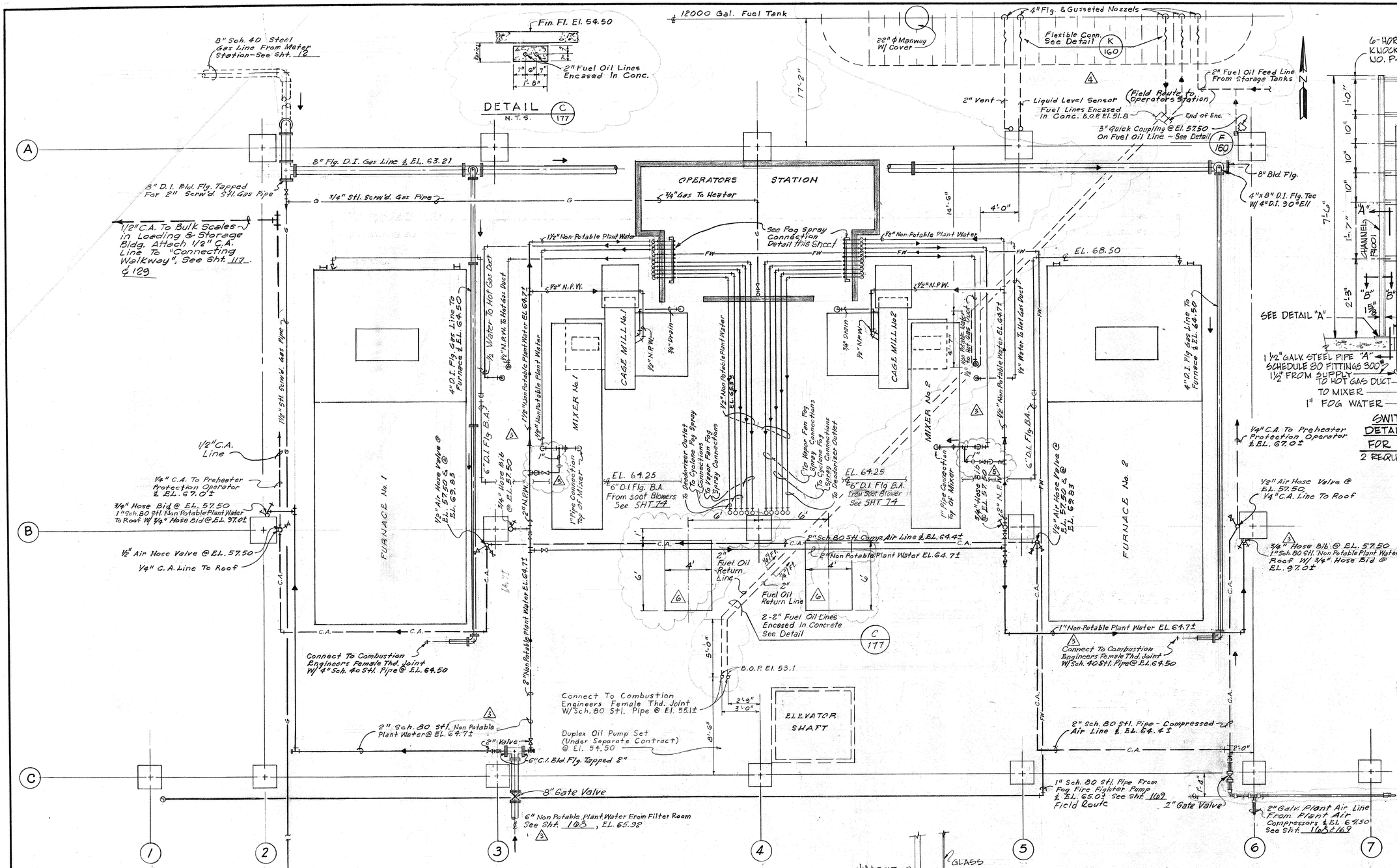

SWITCH BOARD FRAME DETAILS & PIPING DIAGRAM FOR FOG SPRAY CONNECTIONS

2 REQUIRED SCALE 3/4"=1'-0"

NOTE: FRAME MEMBERS, FITTINGS & SPRING NUTS TO BE 1 5/8" CHANNEL WIDTH SERIES (OR EQUAL)

VALVE NOTE

-⋈- SYMBOLS DENOTE CARBON STEEL BALL VALVES, WITH NAME PLATES, AND COMPLETE WITH WRENCH HANDLE WITH SET SCREWS IN HANDLE FOR EA. VALVE.

NOTE: ALL ½" PIPE TO BE GALV. STEEL, SCHEDULE 80. ALL FITTINGS TO BE 300#

REV. NO.	DATE	DESCRIPTION	DESIGN	CHECKED
6	6-79	Construction Revision Blower Foundation Relocated	A.C.B.	H.J.K.
5	6-79	CONSTRUCTION REVISION REV. PIPING AT MIXER	W.G.W.	H.J.K.
4	5-79	Permit Revision Add Fuel Supply Tank	W.B.S.	H.J.K.
3	11-78	Permit Revision Indicate Plant Water As Non Potable	H.J.K.	K.R.L.
2	6-77	Relocate Fuel-Oil Pumps	J.C.S.	K.R.L.
1	3-77	REV. PIPING TO SOOT BLOWERS ADD FLOW ARROWS	J.C.S.	S.R.S.

CITY OF HOUSTON
DEPARTMENT OF PUBLIC WORKS

ALMEDA-SIMS SLUDGE DISPOSAL PLANT-1973

DRYER ROOM PIPING PLAN

RECOMMENDED FOR APPROVAL:
BINKLEY & HOLMES, INC., CONSULTING ENGINEERS

APPROVED:
CHIEF ENGINEER — ASST. CHIEF ENGINEER
ASST. DIRECTORS OF PUBLIC WORKS
DIRECTOR OF PUBLIC WORKS

DESIGNED BY: M. B. J., HRE
DRAWN BY: E. Thomas & M. Muniz
CHECKED BY: M. B. J., HRE
SCALE: 1/4" = 1'-0"
DATE: DEC. 1977
SHEET 177 OF 200 SHEETS
DRAWING NO. 18045

149

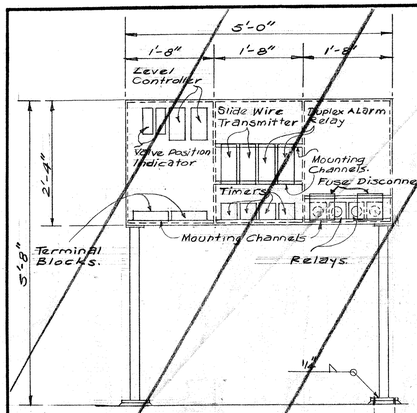

ELEVATION
(Scale: 3/4" = 1'-0")

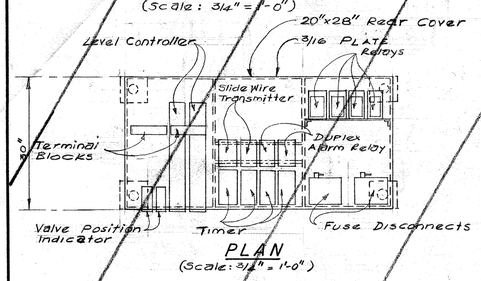

PLAN
(Scale: 3/4" = 1'-0")

TYPICAL SLUDGE LEVEL CONTROL PANEL

Notes:

1. All Framing Members to be Mitered and Welded.
2. All Compartments shall be Framed as shown in Typical Detail and shall be open between Compartments.
3. All Sheet Metal shall be secured with Dust and Moisture Proof Gasket and Screws.
4. All Equipment shall be identified with the number of the Filter it controls. The Valve Position Indicators and Indicating Level Controllers shall have their identifying numbers inscribed on name plates mounted below the instrument on Panel Face. Name Plate Lettering Shall be min. 1" High.
5. Each compartment shall contain the following or Approved Equal:
   - 2- Valve Position Indicators- Robertshaw Model 237-B1, or Bristol
   - 2- Indicating Level Controllers- Robertshaw Model 326-B3-B1, or Bristol.
   - 2- Slide Wire Transmitters- Robertshaw Model 573- B2, or Bristol.
   - 2- Duplex Alarm Relays- Robertshaw Model 554-B2-B2 or Bristol.
   - 4- Timers - ATC or Egel Signal HA103 AC.
   - 4- Relays - Cutler Hammer No. H 2526, or Westinghouse.
   - 2- 5 Amp. Fused Disconnects.
   - 2- Terminal Blocks.

NOTE:
Each Compartment contains Instrumentation for two Filters. Typical locations are shown in Plan and Elevation.

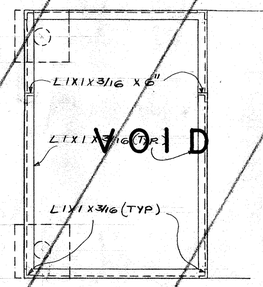

TYPICAL
FRAMING DETAIL
(Scale: 1 1/2" = 1'-0")

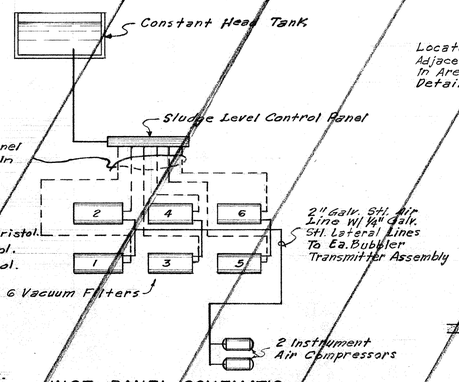

Electrical From Transmitter To Panel To Be Enclosed In Conduit.

INST. PANEL SCHEMATIC

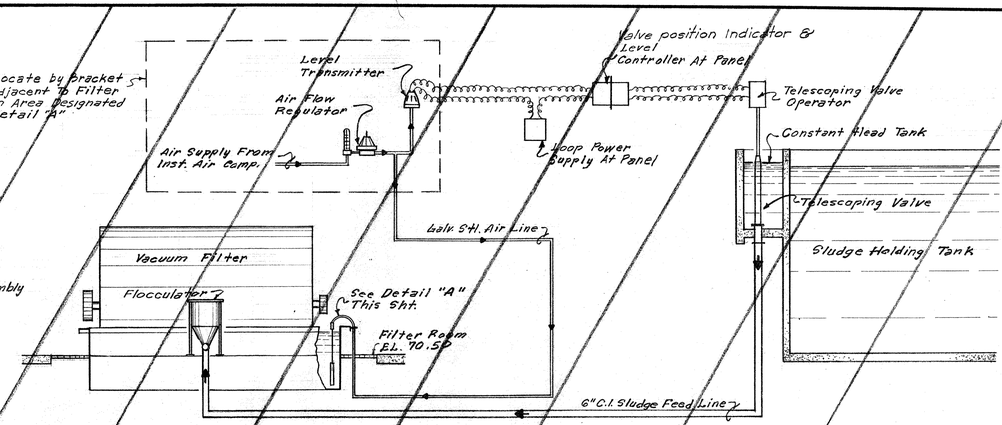

FILTER SLUDGE LEVEL CONTROL

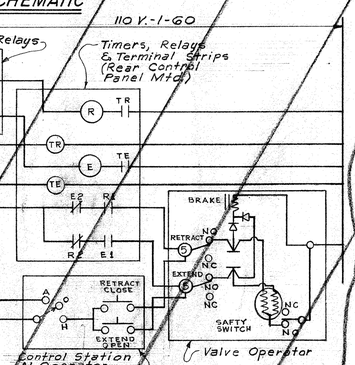

Potentiometer @ Valve Operator Position Indicator Coordinate With Instrument Mfgr. Run Shielded from Operator to Panel.

FUNCTION DIAGRAM

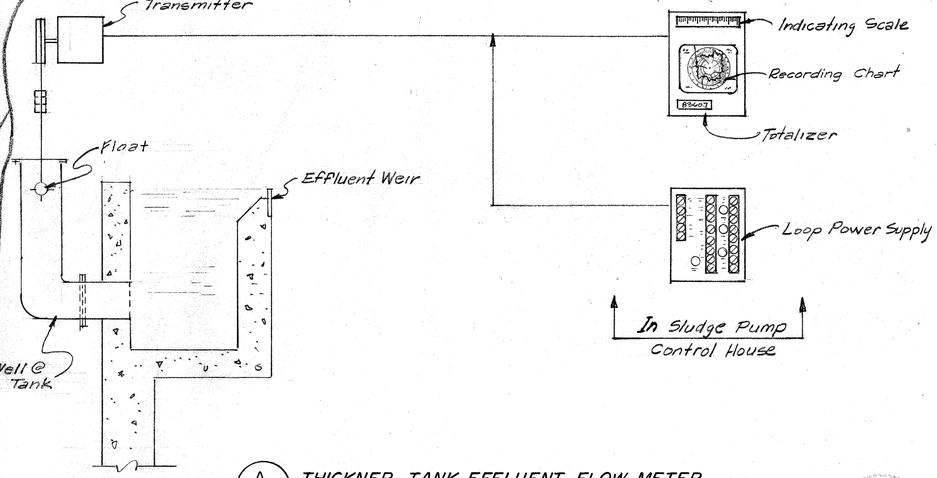

△ A 178 THICKNER TANK EFFLUENT FLOW METER

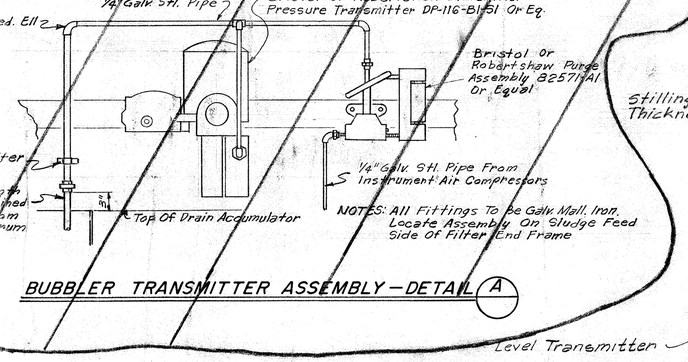

BUBBLER TRANSMITTER ASSEMBLY — DETAIL A

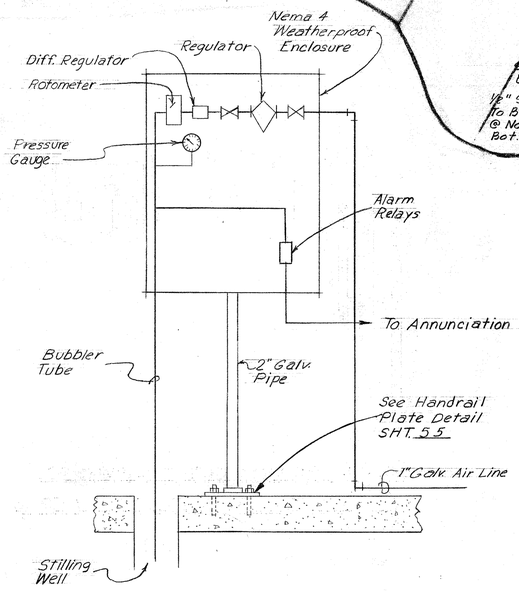

△ CONSTANT HEAD TANK ALARM DETAIL B 178

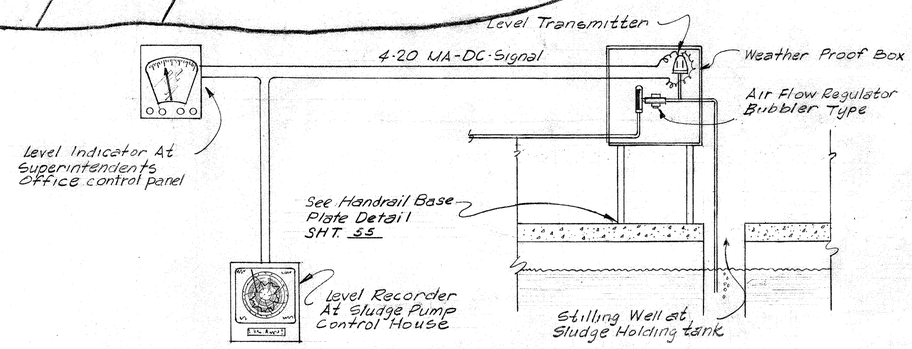

△ SLUDGE HOLDING TANK LEVEL SENSOR C 178

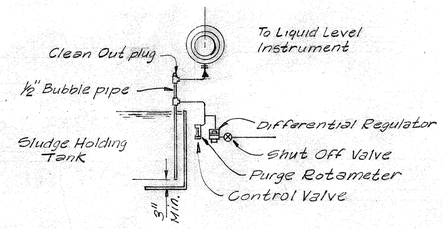

SCHEMATIC - BUBBLE PIPE AND DIFFERENTIAL PRESSURE REGULATOR

REV. NO.	DATE	DESCRIPTION	DESIGN	CHECKED
△	3-77	REV. FLOW METER ADD ALARM DETAIL REV. LEVEL SENSOR	D.C.	SRS

CITY OF HOUSTON
DEPARTMENT OF PUBLIC WORKS

ALMEDA SIMS
SLUDGE DISPOSAL
PLANT — 1973

INSTRUMENTATION
SCHEMATIC

RECOMMENDED FOR APPROVAL:
BINKLEY & HOLMES, INC., CONSULTING ENGINEERS

APPROVED:
CHIEF ENGINEER — ASST. CHIEF ENGINEER
ASST. DIRECTORS OF PUBLIC WORKS
DIRECTOR OF PUBLIC WORKS

DESIGNED BY: M. B. J.
DRAWN BY: E. THOMAS & M. MUNIZ
CHECKED BY: M. B. J.
SCALE: NOT TO SCALE
DATE: DEC. 1973
SHEET 178 OF 200 SHEETS
DRAWING NO. 18045

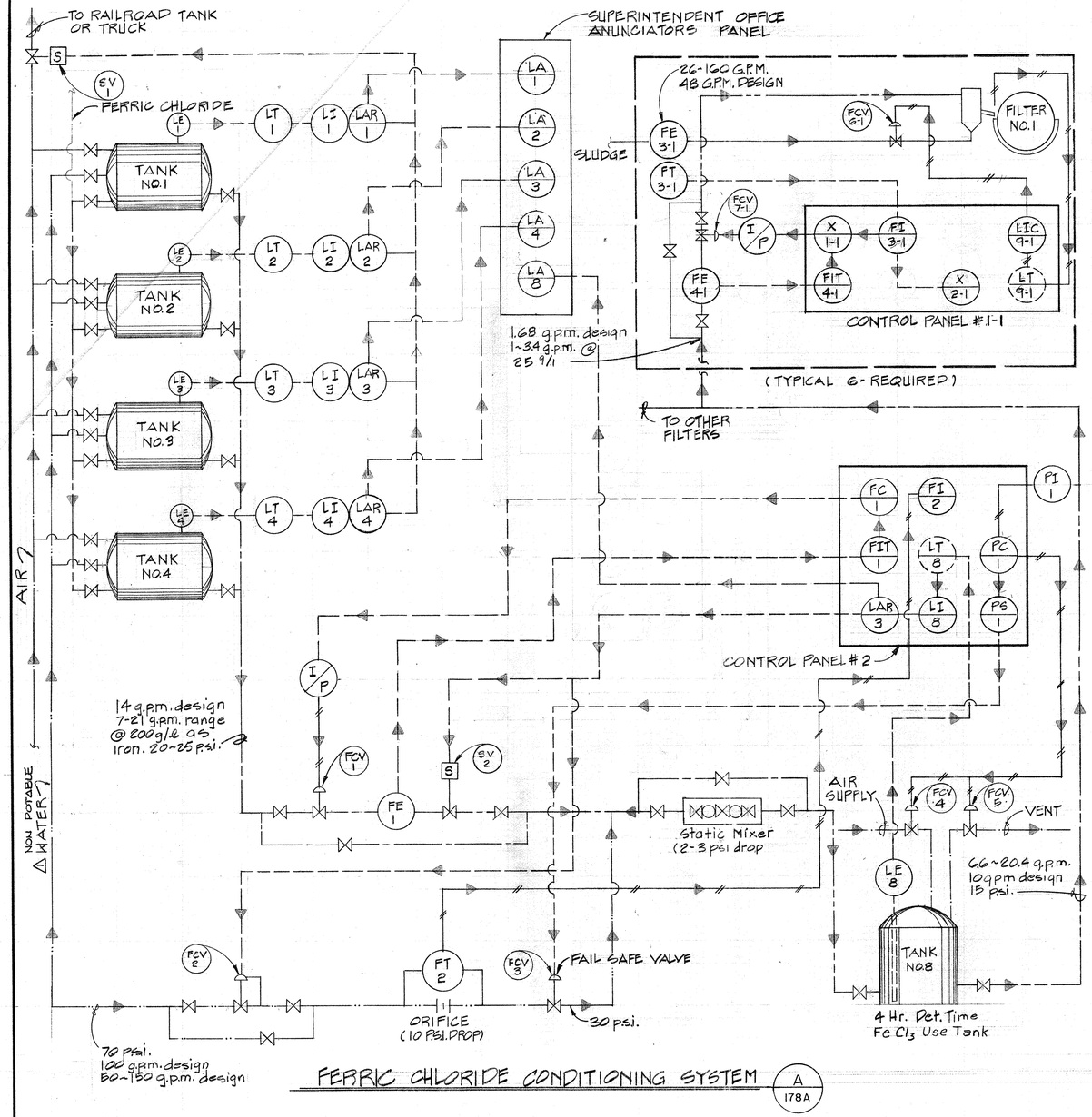

FERRIC CHLORIDE CONDITIONING SYSTEM (A / 178A)

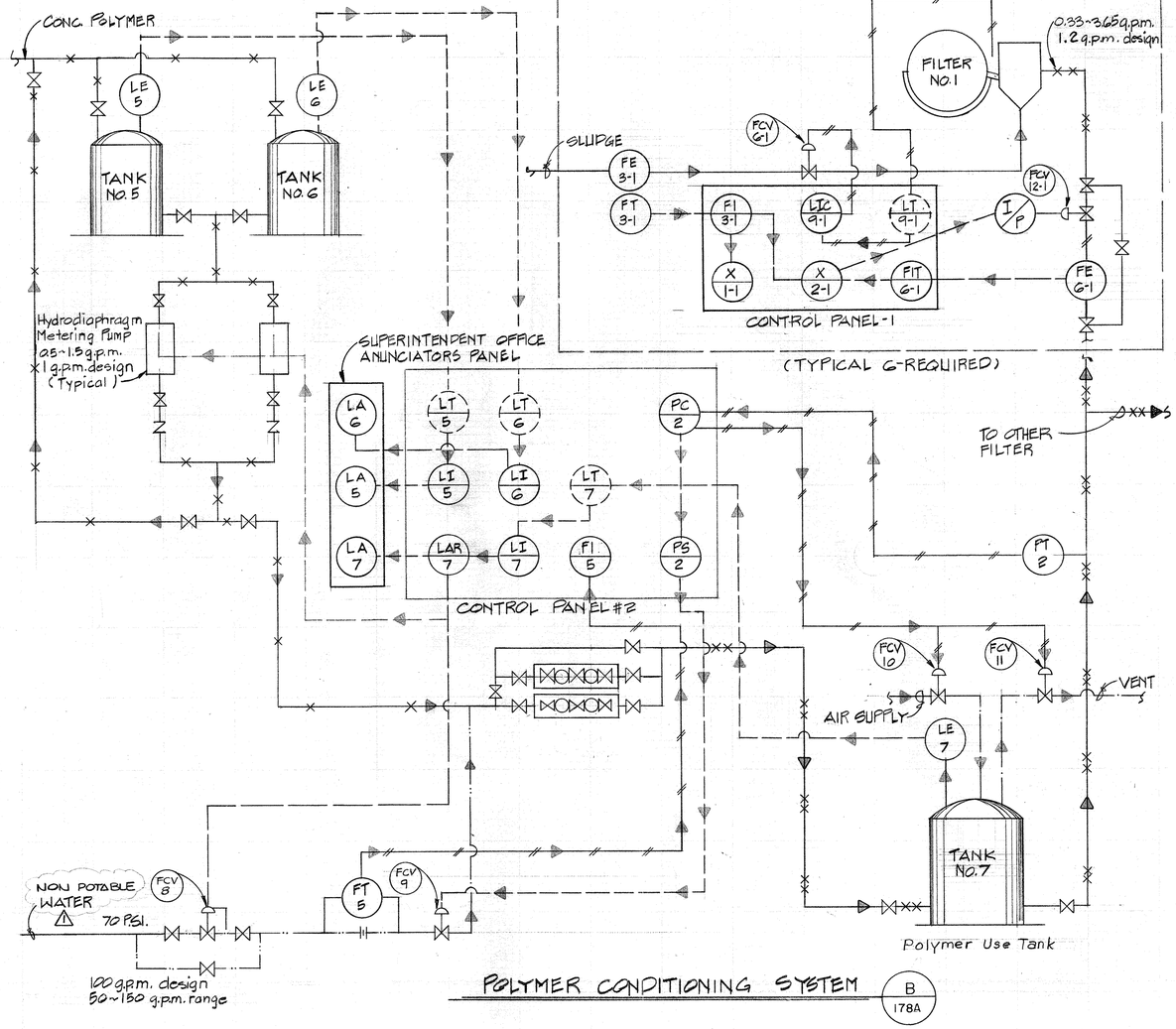

POLYMER CONDITIONING SYSTEM (B / 178A)

LEGEND

- SLUDGE
- AIR
- NON POTABLE WATER
- CONCRETE POLYMER
- CONCRETE FERRIC CHLORIDE
- DILUTED POLYMER
- DILUTED FERRIC CHLORIDE
- ELECTRICAL SIGNAL
- PNEUMATIC SIGNAL
- FIELD MOUNTED INSTRUMENT
- PANEL MOUNTED INSTRUMENT
- PANEL MOUNTED INSTRUMENT (BEHIND PANEL)

LE — LEVEL SENSOR
LT — LEVEL TRANSMITTER
LI — LEVEL INDICATION
LAR — LEVEL ALARM RELAY
LA — LEVEL ALARM
SV — SOLENOID VALVE
FCV — FLOW CONTROL VALVE
FE — FLOW METER
FI — FLOW RATE INDICATOR

FIT — FLOW RATE INDICATION / TRANSMITTER
FC — FLOW CONTROLLER
I/P — CURRENT / PHENUMATIC CONVERTER
FT — FLOW TRANSMITTER
PT — PRESSURE TRANSMITTER
PC — PRESSURE CONTROLLER
PS — PRESSURE SWITCH
X — RATIO CONTROLLER
LIC — LEVEL INDICATOR / CONTROLLER
PA — PRESSURE ALARM

STATE OF TEXAS — KENNETH R. LINDSEY — 31158 — REGISTERED PROFESSIONAL ENGINEER

STATE OF TEXAS — DISON CHANG — 40944 — REGISTERED PROFESSIONAL ENGINEER

REV NO	DATE	DESCRIPTION	DESIGN	CHK
1	10-78	PERMIT REVISIONS INDICATED PLANT WATER NON POTABLE	HJK	KEL

CITY OF HOUSTON
DEPARTMENT OF PUBLIC WORKS

ALMEDA SIMS
SLUDGE DISPOSAL
PLANT – 1973

CHEMICAL CONDITIONING
INSTRUMENTATION SCHEMATIC

RECOMMENDED FOR APPROVAL:
BINKLEY & HOLMES, INC., CONSULTING ENGINEERS

APPROVED:
CHIEF ENGINEER — ASST. CHIEF ENGINEER
ASST. DIRECTORS OF PUBLIC WORKS
DIRECTOR OF PUBLIC WORKS

DESIGNED BY: D.C
DRAWN BY: I.G
CHECKED BY: D.C
SCALE: NONE
DATE: 3-77
SHEET: 178 A OF 200 SHEETS
DRAWING NO. 18045

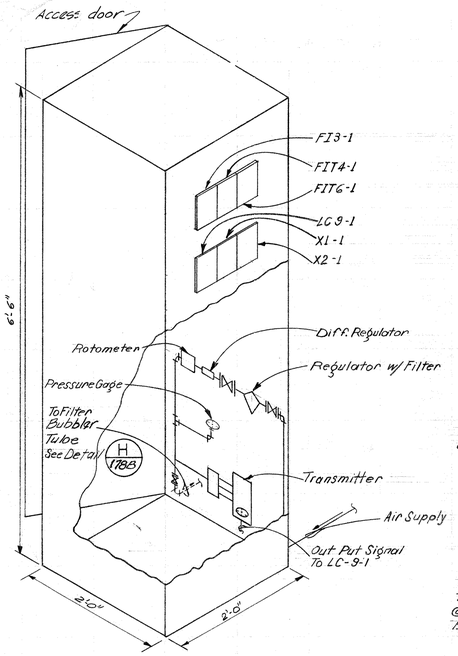

LEGEND

FI3-1 to FI3-6:
Sludge Flow Indicator.

FIT4-1 to FIT4-6 & FIT6-1 to FIT6-6:
Mag. Meter Indicator/Totalizer.

LC9-1 to LC9-6:
Filter Sludge Level Controller

X1-1 to X1-6 & X2-1 to X2-6:
Ratio Controller.

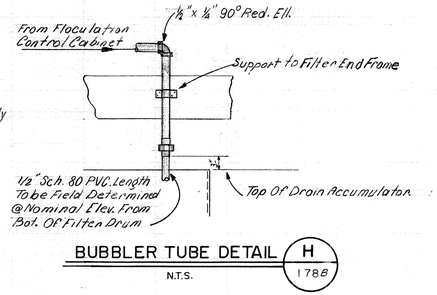

BUBBLER TUBE DETAIL H 178B
N.T.S.

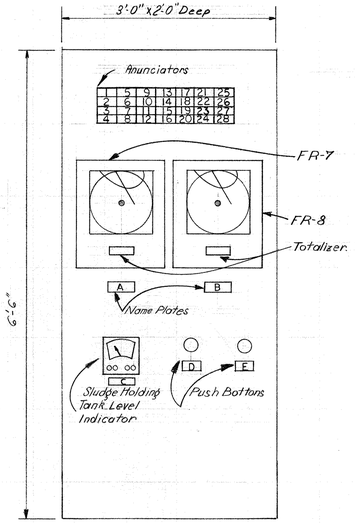

Name Plate:
A. Wasted Sludge
B. Thickened Sludge
C. Holding Tank Sludge Level
D. Test
E. Silence.

ANNUNCIATOR DESCRIPTION

1. $FeCl_3$ Storage Tank #1 High Level
2. $FeCl_3$ Storage Tank #1 Low Level
3. $FeCl_3$ Storage Tank #2 High Level
4. $FeCl_3$ Storage Tank #2 Low Level
5. $FeCl_3$ Storage Tank #3 High Level
6. $FeCl_3$ Storage Tank #3 Low Level
7. $FeCl_3$ Storage Tank #4 High Level
8. $FeCl_3$ Storage Tank #4 Low Level
9. Concentrated Polymer Tank #5 High Level
10. Concentrated Polymer Tank #5 Low Level
11. Concentrated Polymer Tank #6 High Level
12. Concentrated Polymer Tank #6 Low Level
13. Polymer Use Tank #7 High Level
14. Polymer Use Tank #7 Low Level
15. $FeCl_3$ Use Tank #8 High Level
16. $FeCl_3$ Use Tank #8 Low Level
17. Const. Head Tank High Level
18. Const. Head Tank Low Level
19. Screen Box #1 High Level W.A.S. P's Off
20. Screen Box #2 High Level W.A.S. P's Off
21. Low Discharge Pressure W.A.S. P's Off
22. Mechanical Overload Thickener Drive
23. To 28 Spares

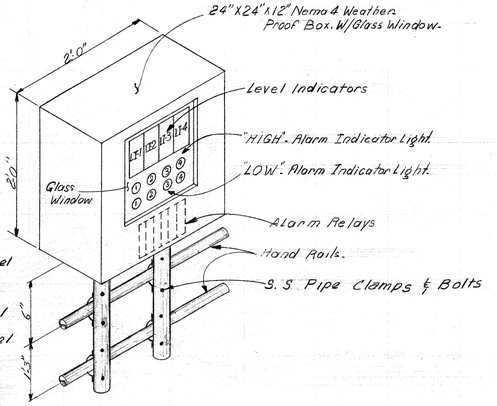

FERRIC CHLORIDE STORAGE TANK'S INDICATOR MOUNTING DETAILS C 178B
N.T.S.

FLOCULATION CONTROL CABINET A 178B
CONTROL PANEL #1-1 to 1-6
N.T.S.

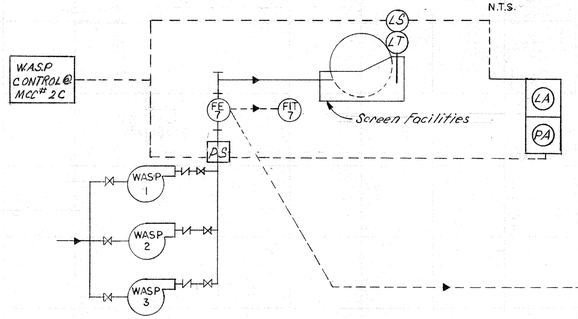

SUPERINTENDENT OFFICE CONTROL CABINET B 178B
N.T.S.

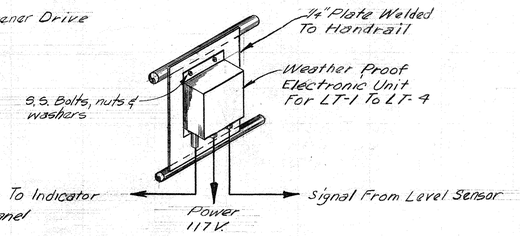

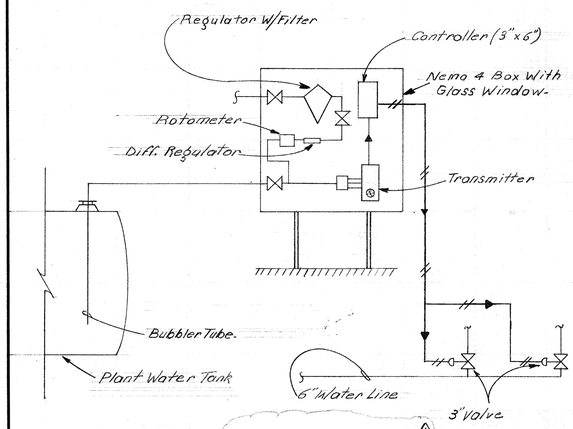

NON POTABLE PLANT WATER CONTROL SYSTEM D 178B
N.T.S.

WASTE SLUDGE FLOW MEASURMENT SYSTEM E 178B
N.T.S

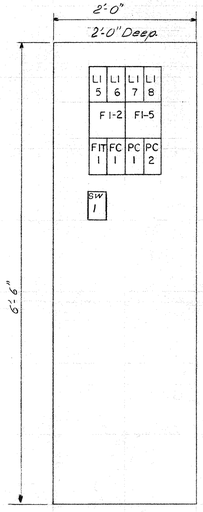

LEVEL TRANSMITTER DETAIL K 178B

PANEL DESCRIPTION

LI-5 to LI-8 : Tanks 5 to 8 Liquid Level Indicator.
FI-2 : Ferric Chloride Dillution Water Flow Rate. Indicator/Totalizer.
FI-5 : Poly. Dillution Water Flow Rate. Indicator/Totalizer.
FIT-1 : Conc. Ferric Chloride Flow Rate.
FC-1 : Ferric Chloride Flow Rate Controller
PC-1 : Ferric Chloride Discharge Pressure Controller.
PC-2 : Poly. Discharge Pressure Controller
SW-1 : Polymer Pump Selector Switch

THICKENED SLUDGE MEASURMENT SYSTEM F 178B
N.T.S.

CHEMICAL ROOM CONTROL CABINET G 178B
CONTROL PANEL #2
N.T.S.

REV. NO.	DATE	DESCRIPTION	DESIGN	CHECKED
1	10-78	PERMIT REVISION INDICATED PLANT WATER AS NON-POTABLE	HJK	KRL

KENNETH R. LINDSEY 31158 REGISTERED PROFESSIONAL ENGINEER
STATE OF TEXAS
DISON CHANG 40961 REGISTERED PROFESSIONAL ENGINEER
STATE OF TEXAS

CITY OF HOUSTON
DEPARTMENT OF PUBLIC WORKS

ALMEDA SIMS
SLUDGE DISPOSAL
PLANT- 1973

INSTRUMENTATION
SCHEMATIC & DETAILS

RECOMMENDED FOR APPROVAL:
Kenneth R. Lindsey
BINKLEY & HOLMES, INC., CONSULTING ENGINEERS

APPROVED:
CHIEF ENGINEER — ASST. CHIEF ENGINEER
ASST. DIRECTORS OF PUBLIC WORKS
DIRECTOR OF PUBLIC WORKS

DESIGNED BY: D.C.
DRAWN BY: P.C.
CHECKED BY: D.C.
SCALE: N.T.S.
DATE: 3-77
SHEET 178 B OF 200 SHEETS
DRAWING NO. 18045

CONDUIT & WIRING INSTALLATION LEGEND

- CONDUIT UNDERGROUND OR EXPOSED IN CEILING OR WALL.
- CONDUIT EXPOSED
- FLEXIBLE CONDUIT
- CONDUIT TURNING UP
- CONDUIT TURNING DOWN
- E — EMPTY CONDUIT STUBBED & CAPPED
- CONDUIT STUBBED & CAPPED
- SHORT DASH FOR EACH PHASE CONDUCTOR
  LONG DASH FOR NEUTRAL CONDUCTOR
  CIRCULAR DASH FOR GROUND WIRE
- LPA-5 — TYPICAL FOR HOMERUN TO BE ROUTED TO LIGHTING PANEL "A" AND CONNECTED TO CIRCUIT NO. 5
- EMH — ELECTRIC MANHOLE
- EPB — ELECTRIC PULL BOX
- CPB — COMMUNICATION PULL BOX
- IPB — INSTRUMENTATION PULL BOX
- J — JUNCTION BOX
- A — LIGHTING FIXTURE REFER TO NUMBER OR LETTER IN LUMINAIRE SCHEDULE
- K — DIRECTION INDICATED FOR FLOODLIGHT LUMINAIRE
- GROUND

MOUNTING

FLUSH	SURFACE	
$	S	SINGLE POLE SWITCH
$2	S2	TWO POLE SWITCH
$3	S3	THREE-WAY SWITCH
$4	S4	FOUR-WAY SWITCH
$WP	SWP	WEATHERPROOF SWITCH
⊖	⊖	DUPLEX RECEPTACLE
⊖WP	⊖WP	WEATHERPROOF DUPLEX RECEPTACLE
◬	◬	240 V. 10 RECEPTACLE, TYPICAL AMPERE RATING NOTED
C	C	CLOCK RECEPTACLE
▶	▶	TELEPHONE OUTLET

ONE-LINE & CONTROL DIAGRAM LEGEND

- 20/3 — I — SIZE I BREAKER COMBINATION MAGNETIC STARTER
- 20/3 — INDIVIDUALLY ENCLOSED STARTER.
- 20/3 — AIR CIRCUIT BREAKER, 3 POLE, 20 AMPERE
- FUSE & DISCONNECT SWITCH. (SIZE NOTED)
- 25 KVA 10 480-120/240 — TRANSFORMER WITH PRIMARY & SECONDARY VOLTAGE AND KVA RATING
- (20) 1A-10; 3#6, 4#14, #10G, 1-2" — CIRCUIT #10 FROM MCC. "A" SERVED OUT OF POWER CENTER 1 WITH 3#6 POWER, 4#14 CONTROL CONDUCTOR AND #10 BAREGROUND WIRE ALL IN 1-V2" CONDUIT TO 20 HP MOTOR.
- HP / KW — LOADS AS INDICATED IN HP OR KW ARE EXPECTED, BUT MAY VARY WITH THE EQUIPMENT FURNISHED. IF EQUIPMENT HAS LARGER LOAD. THE CABLE, CONDUIT AND ELECTRICAL EQUIPMENT SHALL BE ENLARGED AS REQUIRED.
- 15 — ONE-LINE SHOWING POWER & CONTROL TO A PACKAGE UNIT, AS FOR EXAMPLE A STEAM GENERATOR OR AN AIR CONDITIONING UNIT, SHALL IMPLY THAT ANY AND ALL ASSOCIATED EQUIPMENT SHALL ALSO BE INSTALLED. AND WIRED AS REQUIRED BY THE EQUIPMENT MANUFACTURER
- 2/C #16S. 3/4"C — TWO CONDUCTOR NO.16 SHIELDED INSTRUMENT WIRE IN 3/4" CONDUIT.
- INDICATES THAT ALL OR PART OF CIRCUIT MAY BE ROUTED IN DUCT BANK OR UNDERGROUND.
- (5) — FUTURE OR EQUIPMENT BY OTHERS
- HIGH VOLTAGE DRAWOUT FUSED MOTOR STARTER

- (5) — 3Ø MOTOR (SIZE INDICATED)
- START-STOP PUSH BUTTON (LOCKABLE)
- FORWARD-OFF-REVERSE (LOCKABLE)
- HOA — HAND OFF AUTO SWITCH
- ON-OFF SWITCH (LOCKABLE)
- LP — LIGHTING PANEL
- DP — DISTRIBUTION PANEL
- TS — TEMPERATURE SWITCH
- PS — PRESSURE SWITCH
- LS — LEVEL SWITCH
- OS — MECHANICAL OVERLOAD SWITCH
- (A) — AMMETER (RANGE INDICATED)
- AS — AMMETER SWITCH
- (V) — VOLTMETER (RANGE INDICATED)
- (VS) — VOLTMETER SWITCH
- (SV) — SOLENOID VALVE
- (C) — CONTACTOR
- PC — PHOTOCELL
- (R) — RED RUN LIGHT (PUSH TO TEST)
- (G) — GREEN READY LIGHT (PUSH TO TEST)
- ALARM HORN OR BELL

- (M) — OPERATING COIL AS NOTED. STARTER, RELAY, SOLENOID ETC.
- ETM — ELAPSED TIME METER
- PFR — PHASE FAILURE RELAY
- ALT — ALTERNATOR
- CR — CONTROL RELAY
- TR — TIME DELAY RELAY
- Tc — CYCLE TIMER
- Th — THERMOSTAT
- 50/51 — INDUCTION TYPE TIME OVERCURRENT RELAY
- CT — CURRENT TRANSFORMER
- PT — POTENTIAL TRANSFORMER
- MOTOR SPACE HEATER
- 480 V. CAPACITOR
- 2400 V. CAPACITOR
- NORMALLY OPEN CONTACT
- NORMALLY CLOSED CONTACT
- NORMALLY OPEN PUSH BUTTON CONTACT
- NORMALLY CLOSED PUSH BUTTON CONTACT
- THREE POSITION SINGLE GANG SELECTOR SWITCH
- ON-OFF SWITCH

LUMINAIRE SCHEDULE

TYPE	LAMP	DESCRIPTION, MOUNTING, MFG. & CATALOG#
(A)	"A"-LU250/BU/S	"A"-250watt, high pressure sodium vapor, high bay type, luminaire adjustable from 0.73 to 2.2Q o/MH in six positions, with factory isolation fuse and integral 250 watt, 120 VAC, 60Hz, ballast to be pendant mounted on Thompson Hanger. Hubbell #H5D-0250-1A1-P05X-F, Miller or approved equal.
(A-1)	A-1"-LU250/BU/S & Q250DC	"A-1"-Same as Type "A" except with stand by quartz feature. Hubbell #H5D-0250-1A1-P05X-F-Q55-E, Miller or approved equal.
(B)	"B"LU150/BU	"B"-150watt, high pressure sodium vapor, low bay type luminaire with 2.35/MH, factory isolation fuses and integral 150watt 120 VAC, 60 Hz ballast to be ceiling mounted. Hubbell # LXS-101-31-F, Miller or approved equal.
(B-1)	"B-1" LU150/BU & Q150DC	"B-1" Same as type "B" except with stand by Quartz feature. Hubbell # LX6-101-31-F-Q55-E, Miller or approved equal.
(C)	"C"-LU150/BU	"C"-150 watt, high pressure sodium vapor, low bay type, luminaire with 1.55/MH refractor, factory isolation fuse and integral 150watt, 120 VAC, 60 HZ ballast to be ceiling mounted. Hubbel # LXS-311-31-F, Miller or approved equal.
(C-1)	"C-1" LU150/BU & Q150 DC	"C-1" Same as type "C" except with stand by Quartz feature. Hubbell # LXS-311-F-Q55-E, Miller or approved equal.
(D)	LU 70/BU	70 watt high pressure sodium vapor, enclosed and gasketed luminaire with factory isolation fuse, shallow dome reflector and integral 70 watt, 120 VAC, 60 HZ ballast, to be ceiling mounted. Hubbel # LV5X-240-BH81-F/LV403, Miller or approved equal.
(E) (E-1)	2F40CW	"E"- 2'x4' surface mounted fluorescent with silver paraweave louver mittered steel door, hinge and latch either side. Miller # CO-2199-04-3PWL-120, Wright Light, Guth or approved equal. "E-1" Same as type "E" except with Contractor installed emerg. fluorescent pack. Dual Lite #UFO-1, Guth or approved equal.
(F)	LU70/BU	70 watt, high pressure sodium vapor, enclosed and gasketed luminaire with factory isolation fuse, 30° angle reflector and integral 70 watt, 120 VAC, ballast, 1¼" stanchion mounted on a 2" Ø pipe. Hubbell # LV6D-440-BH81-F/LV405 Miller or approved equal.
◀(G)	LU400/BD/S	400 watt high pressure sodium, IES class ND, Cast Aluminum floodlight with integral 400watt, 120 VAC 60HZ ballast, isolation fuse, 3 conductor cord, photo electric cell and rail or wall mounting bracket. Hubbell #9805-120HS-F-C, Widelite #FB-400-C-120-FI-P or approved equal.
◀(H)	LU250/BD/S	Same as type "G" except 250 watt and mounted on wall over Constant Head Tank. Hubbell #9865-120HS-F-C, Widelite #FB-250-C-120-FI-P or approved equal.
(J) (J-1)	4F40CW	"J" 2'x4' surface mounted, fluorescent luminaire with M2 acrylic lens, mittered steel door, hinge and latch either side to be stem mounted with galvanized steel conduit. Miller #CO-4192-04-120, Wright Light or approved equal. "J1" Same as type "J" except with emergency fluorescent pack similar to Type "E1."
(K) (K-1)	4F40CW	"K" Same as type "E" except with four light, 40 watt R.S. "K1" Same as type "K" except with emergency fluorescent pack similar to type "E1."
◀(L)	LU250/BD	250 watt, high pressure sodium, wide beam, cast aluminum floodlight with integral 250 watt, 480 VAC, 60HZ ballast isolation fuse, 3 conductor cord, for mounting on a fixed pole. Hubbell # 9865-480HS/40240-F-C, Widelite # FB-250-C-480-FS or approved equal. Hinged pole to be a K-W Industries #HSP-35-6.0-7.82 with bull horn mounting bracket for 3 fix @120°, Valmont Ind. or approved equal
◀(M)	LU250/BD/S	Same as type "H" except wall mounted. Hubbell #9866-120 HS-F-C/40232, Widelite or approved equal.
(N) (N-1)	4F40CW	"N"- 4 tube, 2'x4', 12.5 fluorescent, HPF, 120 V, lay-in luminaire recessed ceiling mounted, Wright Light #RFPAG-440-24, Miller or approved equal. "N-1" Same as type "N" except with emergency fluorescent pack similar to Type "E"
(P)	LU70/BU	70 watt, high pressure sodium vapor, enclosed and gasketed luminaire with factory isolation fuse, Lexan refractor and integral 70 watt, 120 VAC, ballast, 1¼" stanchion mounted on a 2" Ø pipe. Hubbell # LV5D-440-BH81-F-SLR, Miller or approved.
(W)	LU70/BU	70 watt, high pressure sodium vapor, enclosed and gasketed luminaire with factory isolation fuse, 30° angle reflector and 70 watt, 120 VAC, 60 Hz, ballast to be wall mounted. Hubbell # LV5W-240-BH81-F/LV405, Miller or approved equal.
(X)	2-20T6½ 2-50 CB (40 watts)	Self contained emergency exit luminaire with ten year warranty pure lead battery. World Light Prod. # DRWN-UMI-SG. Bodine or approved equal.

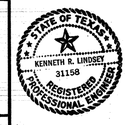

CITY OF HOUSTON
DEPARTMENT OF PUBLIC WORKS

ALMEDA SIMS
SLUDGE DISPOSAL
PLANT - 1973

ELECTRICAL LEGENDS
AND LUMINAIRE SCHEDULE

RECOMMENDED FOR APPROVAL:
BINKLEY & HOLMES, INC., CONSULTING ENGINEERS

APPROVED:
CHIEF ENGINEER — ASST. CHIEF ENGINEER
ASST. DIRECTORS OF PUBLIC WORKS
DIRECTOR OF PUBLIC WORKS

DESIGNED BY: L.M.B.
DRAWN BY: L.M.
CHECKED BY: L.M.B.
SCALE: NONE
DATE: MAR 1977
SHEET 179 OF 200 SHEETS
DRAWING NO. 18045

CITY BENCH MARK
CITY SURVEY MARKER 5351 0116
EL. 54.67

E8+00 E9+00 E10+00 E11+00 E12+00 E13+00 E14+00 E15+00

N1+00 0+00 S1+00 S2+00 S3+00

EAST 8+00

MATCH LINE

Level Transmitter (Typ)
Solenoid Valve
LPZC-5,7,9 -1°C
LPZC-3,6 -1°C
LPZC-11 -1°C
1°C - Inst. signals to Supt. Office, 2-1°C Spares.
3~20A circuits To Heat Tr. Cables On FeCl3 Lines
Control Panel
J.B.
Mounted on handrail See sheet 196 for details
2-2°C & 1-1°C FROM CPB#8
FERRIC CHLORIDE STORAGE TANKS A 180
SCALE: 1" = 10'
TO CPB#10 2-2°C
TYPE E INLET (UNDER SEPARATE CONTRACT)
N 01+01.00 E 10+75.00
24" STORM SEWER (UNDER SEPARATE CONTRACT)
30" STORM SEWER (UNDER SEPARATE CONTRACT)
℄ DITCH
BASE LINE = N 0+00
PROP. 6" C.I.M.J. SCUM LINE ℄ EL. 40.50
42" FORCE MAIN (UNDER SEPARATE CONTRACT)
PROPOSED 8" GAS LINE
S 0+07.00
S 0+12.00
ELEV. B.O.P. 47.00
S 0+32.00
S 0+34.00
S 0+65.00
15"ø x 50' C.M.P. ENCASEMENT
15"ø x 27' C.M.P. ENCASEMENT
20' ASPHALT ROADWAY (UNDER SEPARATE CONTRACT)
PROP. JUNCTION BOX SEE SHEET NO. 187
PROP. R.R. TANK CAR UNLOADING STATION SEE DETAIL D 157
PROP. 4" SCH. 80 STL. FUEL OIL UNLOADING LINE 30" MIN. COVER
15"ø x 45" C.M.P. ENCASEMENT
RAILROAD SPUR TRACKS (UNDER SEPARATE CONTRACT)
4" WATER LINE (UNDER SEPARATE CONTRACT)
PROP. 1" VALVE & BOX
Proposed 1" water line @ EL. 50.0
8" WATER LINE (UNDER SEPARATE CONTRACT)
FUEL OIL SUPPLY TANK
PROP. 4" DRAIN LINE
PROP. 8" P.V.C. DRAIN LINE
PROP. 15" STORM SEWER
PROP. 2" P.V.C. FERRIC CHLORIDE LINE
PROPOSED FERRIC CHLORIDE STORAGE TANKS (SEE DETAIL THIS DWG.)
PROP. 2" WATER LINE ℄ EL. 45.41
PROP. 6" WATER LINE ℄ EL. 45.41
Fuel Oil Pumps 2-5 H.P.
Fuel Oil Pump Control Panel CPB#10
6" C.I.M.J. SCUM LINE EL. 45.50
2-2°C TO W.W.T.P. CPB#11
TRUCK RAMP
Dryer Control Panel CPB#9
CONTROL PANEL
MCC#10 (Under Separate Contract)
MCC#2A
MCC#1A
2#12-3/4"C
PROP. 16" CONC. PRESS. PIPE
PROP. 21" STORM SEWER
PROP. AIR LIFT BLOWER PAD
PROP. 2" SCH. 80 STL. FUEL OIL FEED LINE 30" MIN. COVER
PROP. 16" CONC. PRESS. PIPE EL. 39.50
PROP. 15" STORM SEWER
OIL SEPARATOR
SOLENOID VALVE
PROP. FUEL OIL UNLOADING FACILITIES
Proposed Dryer Bldg.
PROPOSED LOADING & STORAGE BLDG. (UNDER SEPARATE CONTRACT)
PROP. 15" STORM SEWER
PROP. 8" C.I. WATER LINE
PROP. 8" W.J. DRAIN LINE
1A-1;4-4°C
2A-1;4-4°C
JB-1A
JB-2A
PROPOSED FILTRATE SEAL PIT
PROPOSED ASPHALTIC CONCRETE PAVEMENT
Red Alarm Light
E/P Vuan/Flow Transmitter 2C-20; -3/4"C EPB#4
2C-19; 3/4"C
2C-7;1°C
LPZC#6,11;1°C
MCC#2C in Proposed control room EPB#5
6-1°C
3/C, #16S; 3/4"C
1C-1;3-4°C (Under Separate Contract)
For Empty Phone Conduits Within Bldg. See Details of Respective Areas
Proposed Filter Bldg.
1-3/4" Inst. Sig. 18-43;1-4°C
2A-1;4-4°C
2B-1;4-4°C
Tele;1-1°C
Inst;5-1°C
PROP. 15" STORM SEWER
Proposed 4" drain line
1B-43;1-4°C
2C-1;2-4°C
Tele;1-1°C
Inst;5-1°C
1-3/4" Inst Sig.
Telephone termination Box RTB-1
6-1°C
PROPOSED SLUDGE THICKENER TANK See Details Sh #196
PROP. SCREENING FACILITIES See Sh #194
Proposed W.A.S. Pump Pad See Sh #194
EPB#3 Junction Box
2400 Volt Main Switchgear (By Others) See Detail C This Sheet & Key Plan Sheet #182
Future
XFMR. Pad (Typ. For 2)
Vacuum Breaker Pad (Typ. For 2)
See Detail B This Sheet For Duct Section.
3/4"x10' Ground
Copperweld Rod
EMH#1
EMH#2
EMH#3
EMH#4
EPB#1
EPB#2
EPB#5
EPB#6
EPB#7
CPB#1
CPB#2
CPB#3
CPB#4
CPB#5
CPB#6
CPB#7
CPB#8
PROPOSED POWER CENTER No1 See Sheet 194 for Details
8'x5' S PROP. MH.
LC-81-37
2-2°C
2-4°C
2#12-3/4"C
1#2/0 Gnd.
2-4°C, 2-3/4"C (Empty)
1#2/0 Gnd.
MCC#1B @ EL. 70.50
MCC#2B @ EL. 70.50
FOR RETAINING WALL DETAILS SEE SHEET NO. 23
PROPOSED SUPERINTENDENT'S OFFICE AND LUNCH ROOM See Sheet 188 for details
PROP. CONSTANT HEAD TANK
CKT#A2; 2-5°C
9-3½"C (Empty)
1#2/0 Gnd.
1B-43;1-4°C
2B-1;4-4°C
2C-4,5,14,8,20;5-3/4"C
2C-9,15,16,17,18;5-1½"C
LPZC-4&10;2-3/4"C
Inst Sig. 1-3/4"C
To Supt Office
2-2°C
1-1°C
ELEV. 48.50
PROPOSED SLUDGE PUMP PAD See Details sheet 194
CKT#A2 #B2;4-5°C
9-3½"C (Empty)
2C-4,5,6, 8,20;5-3/4"C
2C-9,15,16,17,18,5-1½"C
LPZC-4&10;2-3/4"C 1-3/4"C Inst Sig.
1-1/4"C Control 1½-2-1/2"C 4-1"C Spare.
PROPOSED FUEL OIL STORAGE TANKS
CKT#A2; 2-5°C.
CKT#B2; 2-5°C.
9-3½"C (Empty)
1#2/0 Gnd.
Proposed, 9-3½"C, 6-5°C and 1#2/0 Gnd. To be tied to existing conduits stubbed out 5' past pad.
H.L. & P. CO. 50' R.O.W.
SHELL PIPE LINE CORP. 30' R.O.W.

NOTES

1. Primary 2400 Volt power source from main switchgear @ W.W.T.P. site to be provided by others, Contract # 3304-DT.
2. Contractor shall be responsible for coordination of primary power connections as specified in Section 16410.
3. Proposed arrangement of junction boxes and routing of conduits is approximate. Reference should be made to mechanical, structural and yard piping drawings for details.
4. All conduits as detailed on this sheet shall be installed underground and shall be concrete encased, schedule 40 PVC.
5. All manholes and pull boxes shall be installed so that the covers are readily accessible after completion of their installation.
6. Instrumentation signal conduits to be concrete encased and installed 3' top of duct bank. These conduits shall not pass through power boxes, but shall terminate at instrumentation boxes as shown.
7. See electrical, duct bank, manholes and pull box installation details Sheet # 181
8. All pull boxes and junction boxes above ground and/or wall mounted shall be galvanized steel with access panels and sized as per N.E.C. Pull boxes shall be supported along walls or from ceiling using 2½"x2½"x¼" braced angle to provide adequate strength when weight of conductors is considered.
9. All 2400, 480, 120 Volt power and control wiring in manholes, pull boxes and junction boxes shall be neatly bundled, tied and tagged by circuit number and voltage for identification as per specifications.
10. See Legend sheet # 179 for circuit number (1A-1, 2C-1) etc. interpretations.
11. See Lighting Schedule Sheet # 179
12. Leave galvanized pull wire in all empty conduits.

DUCT SECTION B 180

N.T.S.

Grade
2'-1"
5½" 7"
24" min.
Red Concrete Encasement
5" Conduit
2"
2"
B5 B2 B2
A2 A2 A5
#2/0 Bare Copper Ground
2'-10½"
B3
3½" Conduit
A3
C3 Spare
4 #3 Reinforcement Bars

MANHOLE AND PULL BOX NOTES:

1.) Electrical Manholes (E.M.H.) #1 Thru #3 To Be Pre Cost 5'-0"x8'-0"x6'-6" Deep And EMH #4 Thru 8 To Be Pre Cast 4'-0"x6'-0"x6'-6" Deep Complete With Pull Irons And Galvanized Cable Racks, Brooks Products, Dal-Worth Quick Set Or Approved Equal.

2.) Electrical Pull Box (E.P.B.) #1 Thru #3 To Be Pre Cost 4'-0"x4'-0"x4'-0" Deep, BROOKS Series 303, Dal-Worth Quick Set Or Approved Equal.

3.) Electrical Pull-Box (E.P.B.) #4 Thru #10 And Communication Pull-Box (C.P.B.) #1 Thru #5 To Be 17"x30"x30" Deep, Brooks Series 606E, Dal-Worth Quick Set Or Approved Equal.

4.) Contractor to verify location of all existing and proposed yard piping prior to beginning excavation.

5.) See Manhole & Electrical Duct Bank Detail, Sheet # 181.

Note: Tie 9-3½"C., 6-5°C, & 1#2/0 Gnd. From E.M.H. #1 To Existing Duct Bank.

Conduit Stubbed 5' Past Pad (By Others)

Refer To B This Sheet For Duct Section

15'-5"
B5
B4
B3
B2
B1
AUX.
MCB "B"
MCB "A"
AUX.
A1
A2
A3
A4
A5
2'-0"
7'-0"
41'-0"
Switchgear Pad & Equipment By Others

MAIN SWITCHGEAR C 180

N.T.S.

REV No	DATE	DESCRIPTION	DESIGN	CHECKED
2	8/79	ADDED CONDUIT FROM CONTROL PNL IN DRYER CONTROL ROOM TO FUEL OIL SOLENOID VALVE	D.P.	L.M.B.
1	6/78	TELEPHONE CONDUIT	D.P.	L.M.B.

E 10+00 E 11+00 E 12+00 E 13+00 E 14+00 E 15+00 E 16+00

19128

CITY OF HOUSTON
DEPARTMENT OF PUBLIC WORKS

ALMEDA SIMS SLUDGE DISPOSAL PLANT - 1973

ELECTRICAL SITE PLAN EAST HALF

RECOMMENDED FOR APPROVAL:
Kenneth R. Lindsey
BINKLEY & HOLMES INC. CONSULTING ENGINEERS

APPROVED:
CHIEF ENGINEER ASST. CHIEF ENGINEER
ASST. DIRECTORS OF PUBLIC WORKS
DIRECTOR OF PUBLIC WORKS

DESIGNED BY: L.M.B.
DRAWN BY: A.P.
CHECKED BY: L.M.B.
SCALE: 1" = 30'
DATE: MAR 1977
SHEET 180 OF 200 SHEETS
DRAWING NO. 18045

STATE OF TEXAS KENNETH R. LINDSEY 31158 REGISTERED PROFESSIONAL ENGINEER
STATE OF TEXAS LARRY M. BARFIELD 35337 REGISTERED PROFESSIONAL ENGINEER

NOTE:
ALL PIPES UNDER PRESSURE SHALL HAVE THRUST BLOCKS IN ACCORDANCE WITH APPLICABLE CITY OF HOUSTON SPECIFICATIONS

CITY BENCH MARK
CITY SURVEY MARKER 5351 0116
EL. 54.67

EXISTING FENCE

℄ ALMEDA ROAD

R.R. SPIKE = 0+00 ℄ R.R. TRACK

63° 50' 46"

N0+15.00

PROP. 7' CHAIN LINK FENCE (SEE FENCE PLAN)

PROP. NATURAL GAS METERING STATION (BY OTHERS)

℄ ELEV. 47.50
N0+08.50
E1+00.00

8" CAP

8"-90° ELBOW

8"-90° ELBOW

℄ ELEV. 47.50
E1+10.00

PROP. SHELL DRIVEWAY

SEE CROSSING DETAIL THIS SHEET

S0+02.00
E2+95.00

TYPE 'F' INLET (UNDER SEPARATE CONTRACT)

21" STORM SEWER (UNDER SEPARATE CONTRACT)

BASE LINE = N 0+00

TYPE 'F' INLET (UNDER SEPARATE CONTRACT)

24" STORM SEWER (UNDER SEPARATE CONTRACT)

N0+01.00
E 7+52.08

TYPE 'F' INLET (Under Separate Contract)

S0+12.00

RAILROAD SPUR TRACK (UNDER SEPARATE CONTRACT)

S0+07.00

PROPOSED 8" GAS LINE

S0+12.00

℄ 20' ASPHALT ROADWAY (UNDER SEPARATE CONTRACT)

S0+34.00

18" STORM SEWER (UNDER SEPARATE CONTRACT)

67'-24" STORM SEWER (UNDER SEPARATE CONTRACT)

S0+34.00

PROP. ASPHALTIC CONC. PAVEMENT

S0+65

18" STORM SEWER (UNDER SEPARATE CONTRACT)

8" WATER LINE (UNDER SEPARATE CONTRACT)

E2+21.00

42" FORCE MAIN (UNDER SEPARATE CONTRACT)

S1+30.00

POWER POLE & GUY WIRE

EXISTING 10' SHELL DRIVE

MATCH LINE E 8+00

Proposed Loading And Storage Bldg (under separate contract)

Note: Leave galvanized pull wires in all empty conduits.

M.P. R.R. (I. & G.N.)

(BY OTHERS)
PROP. 84" SAN. SEWER

LIFT STATION (UNDER SEPARATE CONTRACT)

0+00 ℄ PROP. MH.
BY OTHERS=
S-1170=
E-0185

1+01 ℄ PROP. MH.
S2+71=
E-0185

PROP. 8" SAN. SEW.

EXISTING FENCE

EXISTING 10' SHELL DRIVE

POWER POLE

1-2" Communications Conduit Stubbed & Capped

Stub-Out And Cap 9-3½"C. And #2/0 Bare Ground Cable 5 F.T. West Of M.H. #8

Stub-Out And Cap 3-3½"C. & #2/0 Bare Gnd. cable, 3'-0" North of E.M.H. #8

Stub-Out And Cap 2-4"C. 5 F.T. North Of E.P.B. #9

Stub-Out And Cap 2-2"C. 5 F.T. West Of C.P.B. #1

Stub-Out And Cap 2-2"C. 5 F.T. North Of C.P.B. #2

C.P.B. #1

E.P.B. #8

2-2"C.

2-2½"C.

C.P.B. #2

C.P.B. #3

E.P.B. #9

2-2. "EMPTY Future Communication

2-4" Empty Future Power

C.P.B. # 4

E.P.B. #8

E.M.H. # 8

E.M.H. # 7

E.M.H. # 6

9-3½"C. (Empty)
2-2"C. (Empty)
1 #2/0 Gnd.

9-3½"C. (Empty)
2-4"C. 2-2"C. (Empty)
1 #2/0 Gnd.

PROPOSED 8" SAN. SEW.

9-3½"C. (Empty)
2-4"C. 2-2"C. (Empty)
1 #2/0 Gnd.
See Note Above! (Typical)

7.6'

H.L. & P. CO. 50' R.O.W.

SHELL PIPE LINE CORP. 30' R.O.W.

W1+00 0+00 E1+00 E2+00 E3+00 E4+00 E5+00 E6+00 E7+00 E8+00

N1+00 0+00 S1+00 S2+00 S3+00 S4+00 S5+00

Final Grade

2'-6" (Min.) Varies

Compacted Backfill in 8" Layers

Conduits supported by spacer every 5'-0"

4-#2 Reinforcement Bars 3'-0" long @ spacer locations

Concrete Colored Red

#2/0 Ground.

Schedule 40 P.V.C. Conduit Size Varies

2'-2" (Typ.) 3" (Typ.)

TYPICAL SECTION-ELECTRICAL CONDUIT DUCT BANK (A / 181)
N.T.S.

Communication Pull Box

Electrical Pull Box

Conduit Duct Banks

Conduit Duct Bank

Electrical Manhole 4'X6'X6'6" or 5'X8'X6'6"

3½"-5"-5" Conduits @ bottom of duct bank (typical)

ISOMETRIC-PULL BOX & CONDUIT DUCT BANK DETAIL (B / 181)
N.T.S.

REV No.	DATE	DESCRIPTION	DESIGN	CHECKED
1	6/78	TELEPHONE CONDUIT	D.P.	L.M.B.

STATE OF TEXAS
KENNETH M. LINDSEY
31158
REGISTERED PROFESSIONAL ENGINEER

STATE OF TEXAS
LARRY M. BARFIELD
29327
REGISTERED PROFESSIONAL ENGINEER

CITY OF HOUSTON
DEPARTMENT OF PUBLIC WORKS

ALMEDA SIMS
SLUDGE DISPOSAL
PLANT - 1973

ELECTRICAL
SITE PLAN
WEST HALF

RECOMMENDED FOR APPROVAL:
Kenneth M. Lindsey
BINKLEY & HOLMES, INC. CONSULTING ENGINEERS

APPROVED:

CHIEF ENGINEER — ASST. CHIEF ENGINEER

ASST. DIRECTORS OF PUBLIC WORKS

DIRECTOR OF PUBLIC WORKS

DESIGNED BY L.M.B.
DRAWN BY A.P.
CHECKED BY L.M.B.
SCALE 1" = 30'
DATE MAR 1977
SHEET 181 OF 200 SHEETS
DRAWING NO. 18045

For Each Sep. Compt: 60 Watt Incandescent Light And Switch

Surge Protection Equipment

5 KV, 600 Amp. Air Interrupter Switch With Current Limiting Fuse For Use On a 2400 V., 3Ø, 3 Wire System

Ckt. # A2; 3#600 MCM, 5 KV-5°C. From Switch #A2 In 2400 Volt Switchgear "A" @ W.W.T.P. (1-5°C. SPARE)

Ground Bus

Transition Section

1500 KVA, OA, 65°C, 3Ø, 2400Δ-480Y/277 Volt With Provisions For Future Fans

NEMA 3R, POWER CENTER No. 1

2000F/2000T @ 90%

480 V, 3Ø, 2000 Amp. Copper Bus

1600F/1200T CPT

1600F/1000T CPT

600F/600T

Low Voltage Drawout Switchgear Section With G.E. AKR Series, (W) Type D5, Or Approved Equal Breaker With Frame Sizes And Trip Ratings As Shown. All Breakers To Have Ground Fault Protection See Specifications Section 16460

Ground Bus

Space For Future

Feeder To M.C.C.#1C @ Product Storage Building By Others (Under Separate Contract.)

1B-1; 3-500 MCM/Ø & 1#2/0 GND In 3-4"C & 1-4"C (Spare)

1A-1; 3-600 MCM. 1Ø & 1# 3/0 Gnd. In 3-4"C & 1-4" (SPARE)

By H.L. & P. Co.

2400 Volt, 3Ø, Nema 3R Main Switchgear Line Up @ W.W.T.P. By Others. Contract # 3304-DT

Note: 9-3½"C. & 1 #2/0 Gnd. For Ckt. #'s A3, B3 & C3 In This Contract. Cable Feeders To W. Lift Station By Others. Contract # 3292-1.

P.T.S. N.C. — Terminal Pole — P.T.S. N.O. — Terminal Pole — P.T.S. N.C.

15 KV Pad Mounted Vacuum Breaker

5000 KVA, 3Ø, 12470Δ-2400Δ P.M.T.

1200 Amp. 250 MVA — 2400 Volt Main Switchgear "B" — B5 B4 B3 B2 B1

Future 2400 Volt Switchgear "C" — C4 C3 C2 C1

1200 Amp. 250 MVA — 2400 Volt Main Switchgear "A" — A5 A4 A3 A2 A1

Spare — Standby Feeder-E. Lift Station — Normal Feeder-W. Lift Station — Ckt. #B2, 3-600 MCM 5 KV 2-5°C — Feeder-Blowers 3 & 4

Future Feeder-E. Lift Station — Future Feeder-W. Lift Station — Spare — Future Feeder-Blowers 5 & 6

Spare — Standby Feeder-W. Lift Station — Normal Feeder-E. Lift Station — Ckt. #A2, 3-600 MCM 5 KV 2-5°C — Feeder-Blowers 1 & 2

POWER CENTER No. 2 — POWER CENTER No. 1

Feeders to MCC-3A (See Dwg. Supplement Sheet 183A For Details.)

Future — MCC-2A — MCC-2B — MCC-2C — MCC-3A — MCC-1A — MCC-1B — MCC-1C — Future

Standby Feeders (See One Line Diagrams For Details)

Located @ Product Storage Bldg. (By Others)

KEY PLAN

A / 182

▲ Cable termination to 2400 V. Main switchgear to be completed under this contract. Contractor to be responsible for coordination and final connection to primary @ switchgear.

M.C.C.-1A

1200 Amp, 480V, 3Ø Copper Bus Braced For 42000 Amperes Symmetrical

N.C. 600/3 — M.O. — N.C.

250/3 — 350/3 — 600/3 — 600/3 — 90/3 — 80/3 — 40/3 — 20/3 — 15/3 — 15/3 — 15/3 — 15/3 — 15/3 — 15/3 — 175/3 — 60/3 — 15/3 — 15/3 — 15/3 25 KVA 1Ø — 70/3 — 250/3 — 125/3

A & C Ø — 0-1000 A AS

1A-2; 3#4/0 #3 Gnd. 2-4"C

1A-3 5#4/0-3½"C.

1A-4, 2-350 MCM #1/0 GND 2-4"C.

1A-5 5#4-3½"C.

1A-33; 2-350 MCM 1Ø & 1#3/0 GND. In 1A-34; 2-350 MCM 1Ø & 1#2/0 Gnd. In 2-2½"C.

See Note 2 Sht. #183

1A-6; 3#6-1¼"C.

1A-7; 3#8-1¼"C.

1A-8; 3#10-1¼"C.

1A-9; 3#12-1¼"C.

1A-10; 3#12-1¼"C.

1A-11; 3#12-1¼"C.

1A-12; 3#12-1¼"C.

Control Pnl. See Note 1 Sht. #183.

1A-13; 3#8 & 1#10 GND-1¼"C.

1A-14; 3#8 & 1#10 GND-1¼"C.

1A-15; 3#8 & 1#10 GND-1¼"C.

1A-16; 3#8 & 1#10 GND-1¼"C.

1A-17; 3#8 & 1#10 GND-1¼"C.

1A-18; 3#8 & 1#10 GND-1¼"C.

1A-19; 3#8 & 1#4 GND-2½"C.

1A-20; 5#10-¾"C.

1A-23; 3#8 Grnd. 3-4"C. By Elevator Supplier

1A-25; 3#4-1¼"C.

1A-26; 3#2 & 1#6 Grnd-1½"C.

1A-28

1A-29; 2#6 & 1#8 Gnd-1½"C.

25 KVA, 1Ø, 120/240 V.

1A-31; 3-250 MCM-2½"C.

LP 1A

1A-32; 3#1 & 1#6 Gnd. 1½"C.

LPH-18; 2#12-¾"C. Control from LP-1A

Vapor Fan #1 — 5 HP

Induced Draft Fan #1 — 5 HP

Standby Feeder From MCC-2A — 5 HP

Standby Feeder To MCC-2A — 5 HP

Mixer #1 — 5 HP

Cage Mill #1 — 5 HP

Combustion Air Fan #1 — 5 HP

Dry Divider #1 — 5 HP

Belt Conveyor "B" (Reversible) — 3 HP

Belt Conveyor "A" (Reversible) — 3 HP

Belt Conveyor "E" — 3 HP

Bran Conveyor S-2 (Reversible) — 3 HP

Double Flap Valve #1 — 3 HP

Multiclone Air Lock Valve #1 — 3 HP

Soot Blower #1 — 3 HP

Elevator — 2 HP

Future Belt Conveyor "G" — 5 HP

Fuel Oil Pump #1 — 2 HP

Spare

120/240 V. 1Ø Circuits In Dryer Control Room — 100 Amp

150 KVAR Capacitor

Standby Feeder To MCC-3A — 100 Amp

See Dwg. Supplement Sheet 183A For Further Details.

M.C.C.-1B

1200 Amp, 480V, 3Ø Copper Bus Braced For 42,000 Amperes Symmetrical

A5 — A 0-1000 — B Ø, C Ø

225/3 — 225/3 — 110/3 — 15/3 — 110/3 — 100/3 — 40/3 — 40/3 — 60/3 — 40/3 — 25/3 — 25/3 — 20/3 — 15/3 — 15/3 — 15/3 — 15/3 — 15/3 — 15/3 — 15/3 — 15/3 — 15/3 — 15/3 — 15/3 — 15/3 — 15/3 — 70/3 — 70/3 — 60/3 — 100/2 — 250/3 — 300/3

18-1; 3#2/0 Grnd-1¼"C.

18-2; 3#4 THW-1¼"C.

18-3; 3#2 Grnd-1½"C.

18-4; 3#6 Grnd-1¼"C.

18-5; 3#4 THW-1¼"C.

18-6; 3#6 Grnd-1¼"C.

18-7; 3#4 THW-1¼"C.

18-8; 3#4 THW-1¼"C.

18-9; 3#4 THW-1¼"C.

18-10; 3#4 THW-1¼"C.

18-11; 5#4 THW-3"C.

18-12; 3#4 THW-1¼"C.

18-13; 3#8 Grnd-1¼"C.

18-14; 3#4 THW-1¼"C.

18-15; 3#4 THW-1¼"C.

18-16; 3#6 & 1#10 GND-1"C.

18-17; 3#4 THW-1¼"C.

18-18; 3#4 THW-1¼"C.

18-19; 3#4 THW-1¼"C.

18-20; 3#12 & 1#8 GND-1¼"C.

18-21; 3#4 THW-1¼"C.

18-22; 3#4 THW-1¼"C.

18-23; 3#4 THW-1¼"C.

18-24; 3#4 THW-1¼"C.

18-25; 3#4 THW-1¼"C.

18-26; 3#4 THW-1¼"C.

18-27; 3#4 THW-1¼"C.

18-28; 3#4 THW-1¼"C.

18-29; 3#4 THW-1¼"C.

18-30; 3#4 THW-1¼"C.

18-31; 3#12 & 1#8 GND-1¼"C.

18-32; 3#4 THW-1¼"C.

18-33; 3#4 THW-1¼"C.

18-34; 3#4 THW-1¼"C.

18-35; 3#4 THW-1¼"C.

18-36; 3#4 THW-1¼"C.

18-37; 2#1/0 & 1#6 GND-1¼"C.

18-38; 2#4 & 1#8 GND-1¼"C.

18-39; 3#6 & 1#8 GND-1"C.

18-40; 3#1 & 1#6 GND-1½"C.

18-41; 2#3 4 GND-1½"C.

18-42; 3-250 MCM-2½"C.

18-43; 3-400 MCM & 1#6 GND-4"C.

See Note: 2 Sheet 183

Dry Vacuum Pump #2 — 15 HP

Dry Vacuum Pump #4 — 15 HP

Wet Vacuum Pump #2 — 10 HP

Spare

Plant Water Pump #3 — 10 HP

Sludge Holding Tank Blower #1 — 5 HP

Instrument Air Compressor #2 — 5 HP

Instrument Air Compressor #3 — 5 HP

SLUDGE AIR LIFT BLOWER #1 — 15 HP

Filter Air Blower #2 — 15 HP

Plant Air Compressor #1 — 10 HP

Plant Air Compressor #3 — 10 HP

Connection for Monorail — 7½ HP

Roof Vent Fan #1 — 5 HP

East Vent Fan #3 — 5 HP

Filter Drive #1 — 3 HP

Filter Drive #2 — 3 HP

Filter Drive #4 — 3 HP

Filter Agitator #1 — 3 HP

Filter Agitator #2 — 3 HP

Filter Agitator #4 — 3 HP

Future Filter Drive — 3 HP

Future Filter Agitator — 3 HP

Connection for Monorail — 2 HP

Polymer Pump #1 — 1½ HP

Flocculator #1 — 1 HP

Flocculator #2 — 1 HP

Flocculator #4 — 1 HP

Future Flocculator — 1 HP

FILTRATE SEAL AIR LIFT PUMP #1 — 25 HP

FILTRATE SEAL AIR LIFT PUMP #2 — 25 HP

480 V. receptacle in Equip Room — 60 Amp

Space

120/240 V. 1Ø Circuits

150 KVAR Capacitor

Standby Feeder To MCC #2C

375 KVA 1Ø

LP 1B

REV NO	DATE	DESCRIPTION	DESIGN	CHECKED
2	6-79	RELOCATED FILTRATE SEAL AIR LIFT PUMPS #1 AND #2 STARTERS FROM MCC-1A TO MCC-1B. INCREASED HP'S OF ID FAN, SOOT-BLWR AND SLUDGE AIR LIFT BLWR. REVISED CORRESP STARTERS, FEEDER, ETC	D.P.	L.M.B.
1	6/78	REVISED MCC-1A TO PROVIDE SWITCHING CAPABILITY FOR VF#1 AND IDF#1, REMOVED XFMR & LP-1A FROM MCC-1A, REFERENCE SH. 83-A FOR DETAILS.	D.P.	L.M.B.

STATE OF TEXAS — KENNETH R. LINDSEY — 31158 — REGISTERED PROFESSIONAL ENGINEER

STATE OF TEXAS — LARRY M. BARFIELD — 38937 — REGISTERED PROFESSIONAL ENGINEER

CITY OF HOUSTON
DEPARTMENT OF PUBLIC WORKS

ALMEDA-SIMS SLUDGE DISPOSAL PLANT-1973

ELECTRICAL ONE LINE DIAGRAM KEY PLAN, POWER CENTER Nº1, MCC Nº'S 1A, AND 1B

RECOMMENDED FOR APPROVAL:
Kenneth R. Lindsey
BINKLEY & HOLMES, INC., CONSULTING ENGINEERS

APPROVED:

CHIEF ENGINEER — ASST. CHIEF ENGINEER

ASST. DIRECTORS OF PUBLIC WORKS

DIRECTOR OF PUBLIC WORKS

DESIGNED BY: L.M.B., D.P.
DRAWN BY: R.D.W.
CHECKED BY: L.M.B.
SCALE: NONE
DATE: MARCH 1977
SHEET 182 OF 200 SHEETS
DRAWING NO. 18045

NOTES:

1. Ammeter and Donut C.T.'S for Induced Draft Fans, Vapor Fans, Mixers and Cage Mills are furnished with Combustion Control Equipment. Contractor to mount C.T.'S in MCC'S #1A and 2A and run secondary leads to ammeters mounted on Cubustion Control Panels. Contractor to install Conductors for Control, Indicator lights, and interlocking Circuits as described in Cumbustion Panel Specifications for John Bean Pumps, Drying Equipment Motors as well as belt and screw conveyors.
2. Power to space heaters shall be from Lighting Panels as per drawings. A N.C. motor contact shall be connected in series with each heater such that heater will only be on when motor is off.

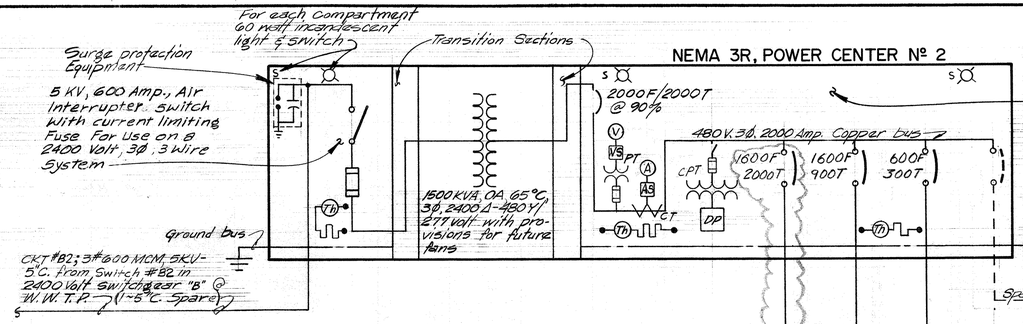

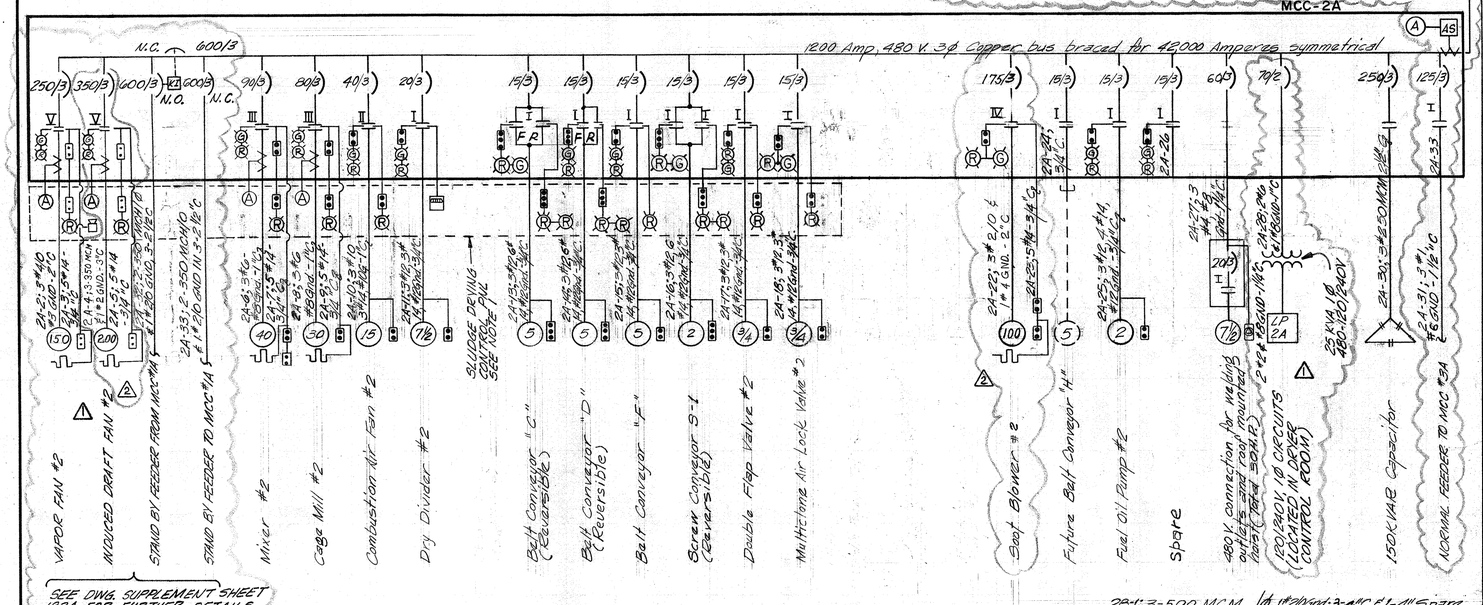

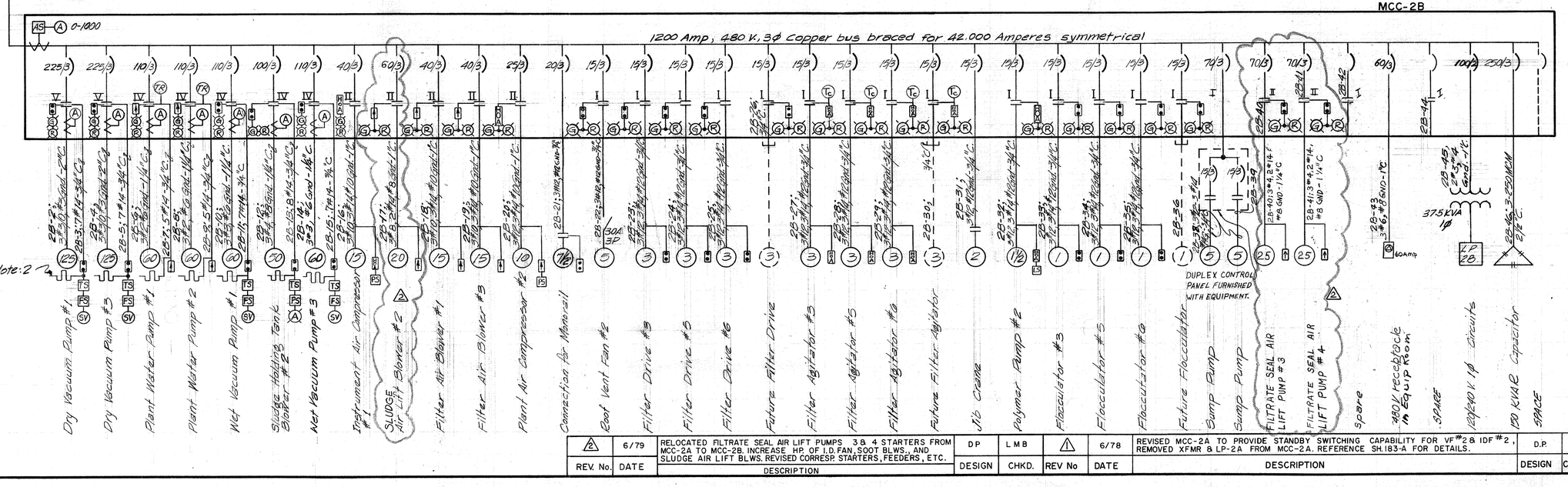

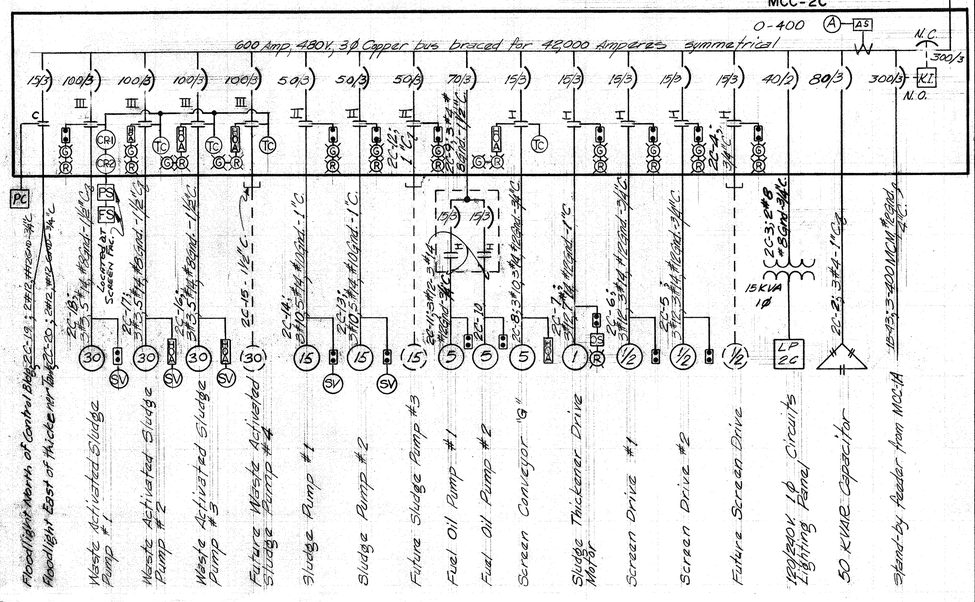

REV. No.	DATE	DESCRIPTION	DESIGN	CHKD.	REV No	DATE	DESCRIPTION	DESIGN	CHECKED
2	6/79	RELOCATED FILTRATE SEAL AIR LIFT PUMPS 3 & 4 STARTERS FROM MCC-2A TO MCC-2B. INCREASE HP. OF I.D. FAN, SOOT BLWS., AND SLUDGE AIR LIFT BLWS. REVISED CORRESP. STARTERS, FEEDERS, ETC.	DP	L M B	1	6/78	REVISED MCC-2A TO PROVIDE STANDBY SWITCHING CAPABILITY FOR VF#2 & IDF#2, REMOVED XFMR & LP-2A FROM MCC-2A. REFERENCE SH.183-A FOR DETAILS.	D.P.	L.M.B.

KENNETH R. LINDSEY 31158 REGISTERED PROFESSIONAL ENGINEER — STATE OF TEXAS

LARRY M. BARFIELD 39237 REGISTERED PROFESSIONAL ENGINEER — STATE OF TEXAS

CITY OF HOUSTON
DEPARTMENT OF PUBLIC WORKS

ALMEDA - SIMS
SLUDGE DISPOSAL
PLANT - 1973

ELECTRICAL ONE LINE DIAGRAM
POWER CENTER Nº 2
MCC Nº'S 2A, 2B, AND 2C

RECOMMENDED FOR APPROVAL:
BINKLEY & HOLMES, INC., CONSULTING ENGINEERS

APPROVED:
CHIEF ENGINEER — ASST. CHIEF ENGINEER
ASST. DIRECTORS OF PUBLIC WORKS
DIRECTOR OF PUBLIC WORKS

DESIGNED BY: L.M.B, D.P
DRAWN BY: R.D.W
CHECKED BY: L.M.B
SCALE: NONE
DATE: MARCH 1977
SHEET 183 OF 200 SHEETS
DRAWING NO. 18045

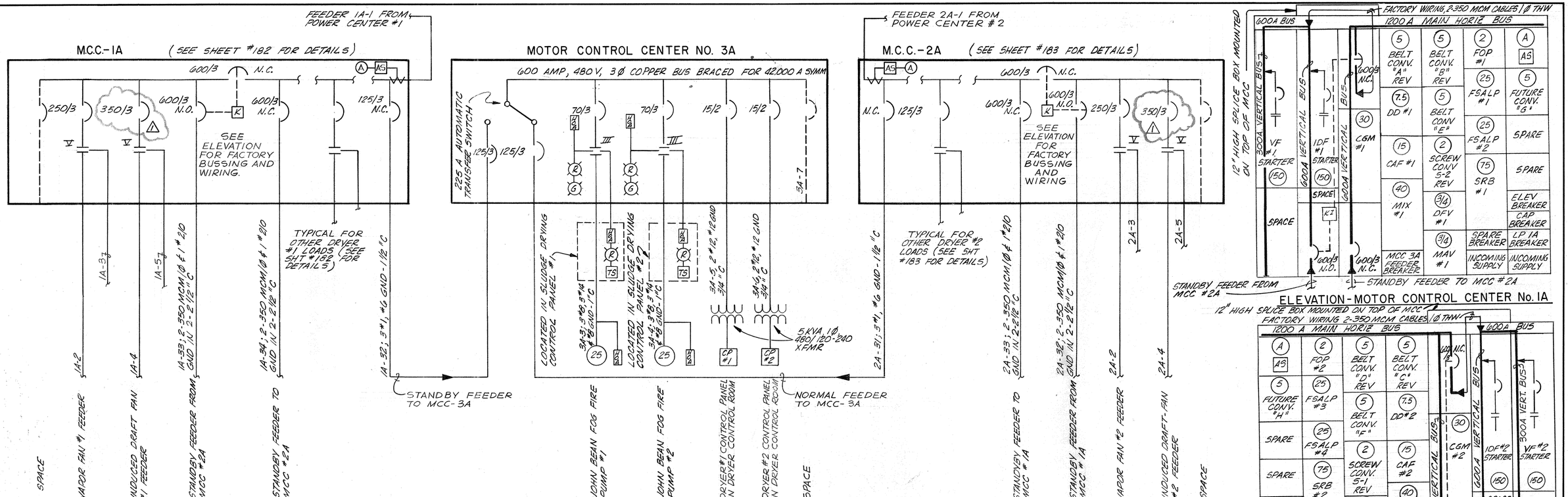

REV NO	DATE	DECRIPTION	DESIGN	CHECKED
1	6-79	REVISED ID FAN NO. 1 AND 2 CKT BKR SIZES	D.P.	L.M.B.

CITY OF HOUSTON
DEPARTMENT OF PUBLIC WORKS

ALMEDA SIMS
SLUDGE DISPOSAL
PLANT - 1973

ELECTRICAL ONE LINE DIAGRAM
CONTROL SCHEMATICS
AND DETAILS
SUPPLEMENT NO. 1

RECOMMENDED FOR APPROVAL:

BINKLEY & HOLMES, INC. CONSULTING ENGINEERS

STATE OF TEXAS — LARRY M. GARFIELD — 39337 — REGISTERED PROFESSIONAL ENGINEER

APPROVED:

WASTEWATER	PAVING
WATER	CONSTRUCTION
STORM SEWER	
ASST. DIRECTOR	DIRECTOR

DESIGNED BY: LMB, DP — SCALE: NONE
DRAWN BY: MVS — DATE: JUNE 1978
CHECKED BY: LMB — DRAWING NO. 18045
SHEET — SHEET NO. 183A OF 200

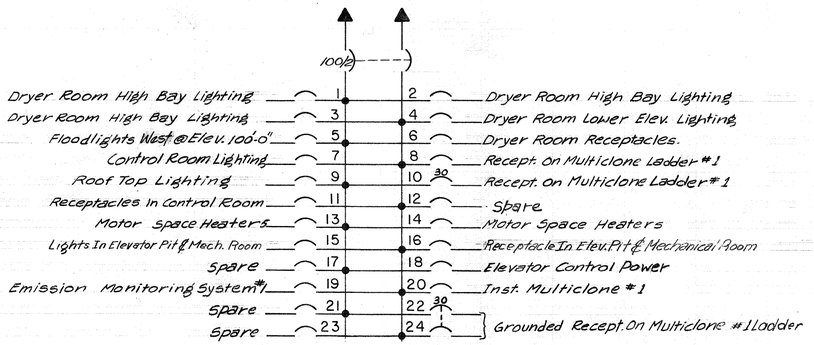

S/N

LIGHTING PANEL No. 1A (A / 184)

⚠ WALL MOUNTED IN DRYER CONTROL ROOM

1Φ, 120/240V, 3W, S/N
All Breakers 20/1
Except As Shown

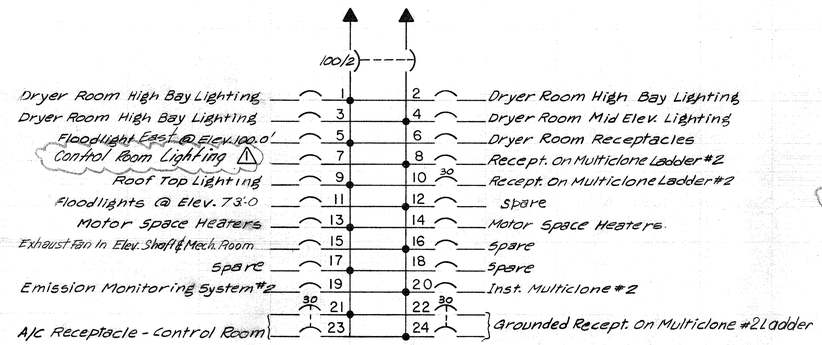

S/N

LIGHTING PANEL No. 2A (B / 184)

⚠ WALL MOUNTED IN DRYER CONTROL ROOM

1Φ, 120/240V, 3W, S/N
ALL Breakers 20/1
Except As Shown

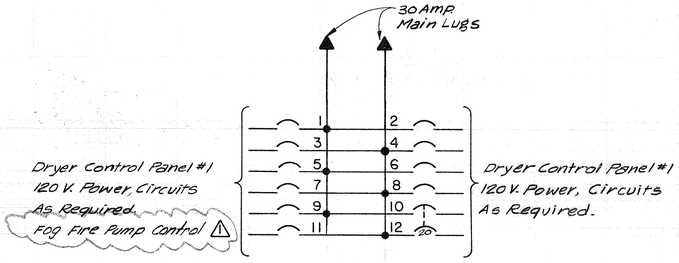

S/N

DRYER CONTROL LIGHTING PANEL No. 1A (C / 184)

WALL MOUNTED IN DRYER CONTROL ROOM

1Φ, 120/240V, 3W, S/N
All Breakers 20/1
Except As Shown

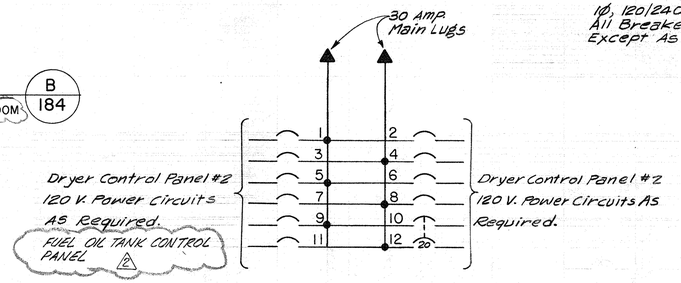

S/N

DRYER CONTROL LIGHTING PANEL No. 2A (D / 184)

WALL MOUNTED IN DRYER CONTROL ROOM

1Φ, 120/240 V, 3W, S/N
All Breakers 20/1
Except As Shown.

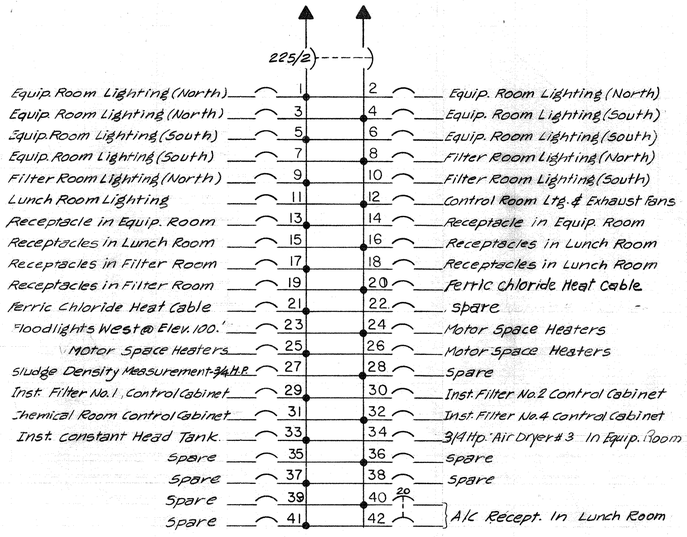

S/N

LIGHTING PANEL No. 1B (E / 184)

WALL MOUNTED IN FILTER M.C.C. ROOM

1Φ, 120/240 V., 3W, S/N
All Breakers 20/1
Except As Shown

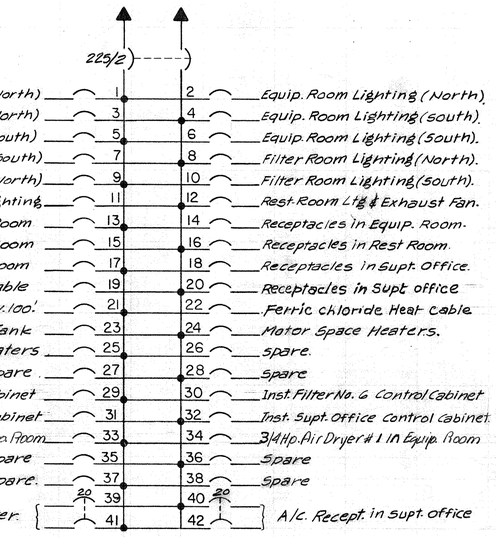

S/N

LIGHTING PANEL No. 2B (F / 184)

WALL MOUNTED IN FILTER M.C.C. ROOM

1Φ, 120/240 V., 3W, S/N
All Breakers 20/1
Except As Shown

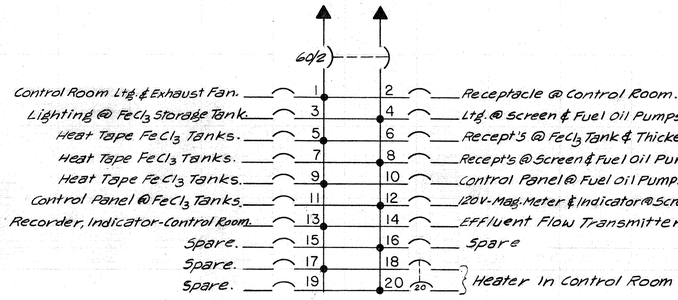

S/N

LIGHTING PANEL No. 2C (G / 184)

WALL MOUNTED IN M.C.C. ROOM

1Φ, 120/240 V, 3W, S/N
All Breakers 20/1
Except As Shown

REV No.	DATE	DESCRIPTION	DESIGN	CHECKED
2	8/79	MINOR CIRCUIT CHANGE IN DRYER CONTROL LTG PNL NO. 2A	D.P.	L.M.B.
1	6/78	MOVED LP-1A & 2A FROM MCC TO INSIDE OF DRYER CONTROL ROOM. MINOR CIRCUIT CHANGES.	D.P.	L.M.B.

STATE OF TEXAS — KENNETH R. LINDSEY — 31158 — REGISTERED PROFESSIONAL ENGINEER

STATE OF TEXAS — LARRY M. BARFIELD — 39337 — REGISTERED PROFESSIONAL ENGINEER

CITY OF HOUSTON
DEPARTMENT OF PUBLIC WORKS

ALMEDA-SIMS
SLUDGE DISPOSAL
PLANT-1973

ELECTRICAL
LIGHTING PANEL
DETAILS

RECOMMENDED FOR APPROVAL:
Kenneth R. Lindsey
BINKLEY & HOLMES, INC., CONSULTING ENGINEERS

APPROVED:

CHIEF ENGINEER — ASST. CHIEF ENGINEER

ASST. DIRECTORS OF PUBLIC WORKS

DIRECTOR OF PUBLIC WORKS

DESIGNED BY: D.P.
DRAWN BY: A.P.
CHECKED BY: L.M.B.
SCALE: NONE
DATE: MAR. 1977
SHEET 184 OF 200 SHEETS
DRAWING NO. 18045

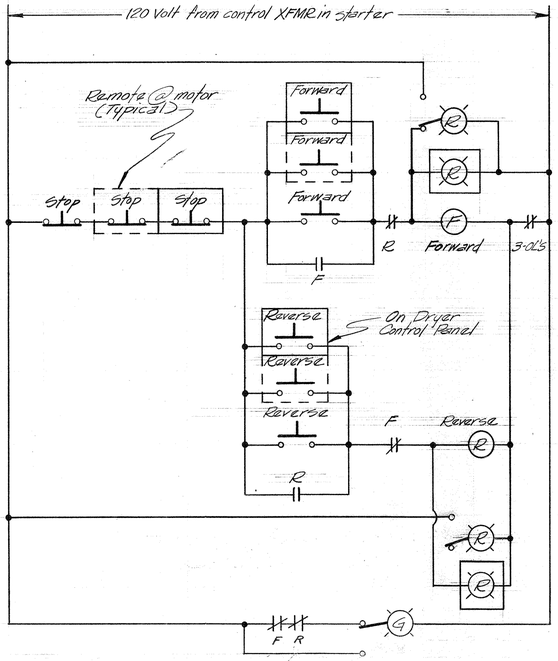

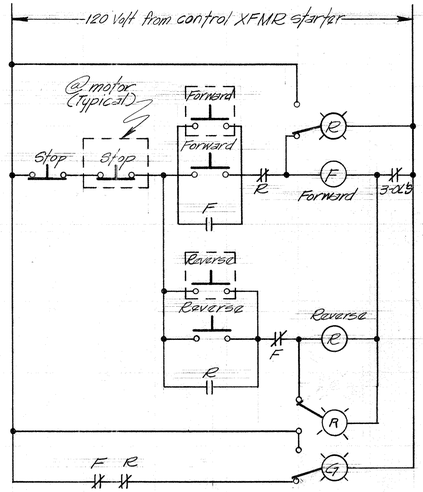

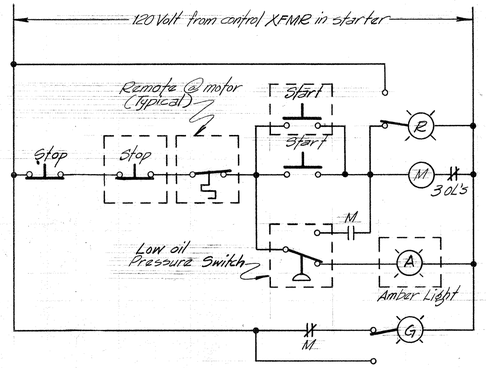

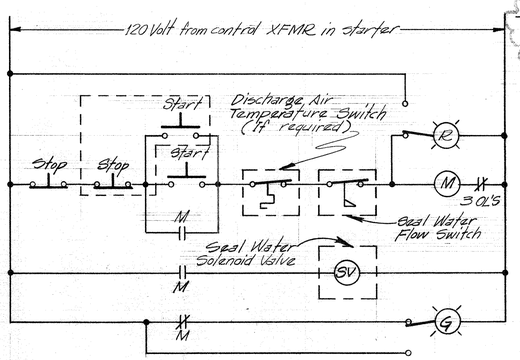

NOTE
SEE DRAWING SUPPLEMENT FOR FOG FIRE PUMP AND PLANT WATER PUMP CONTROL SCHEMATICS SHEET 185A.
⚠

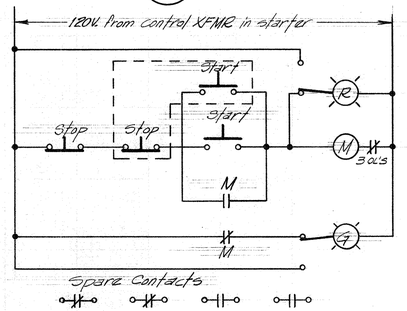

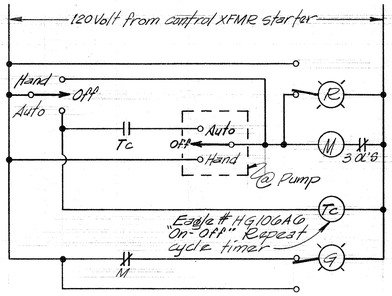

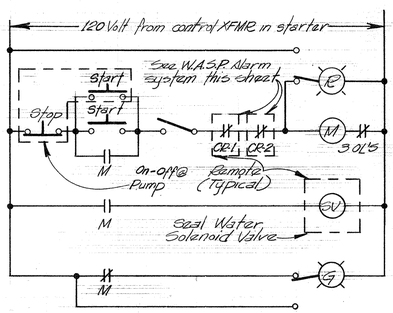

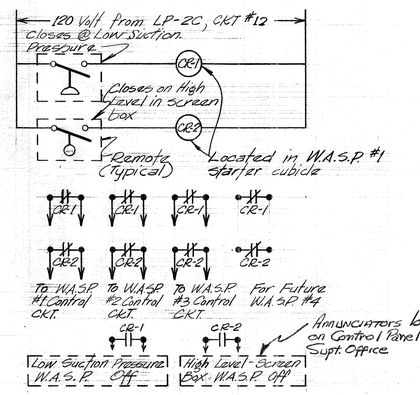

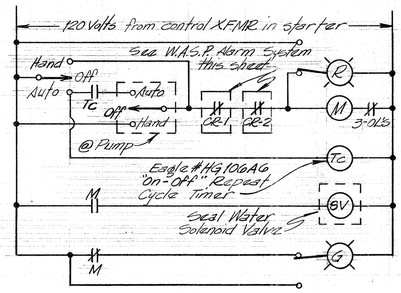

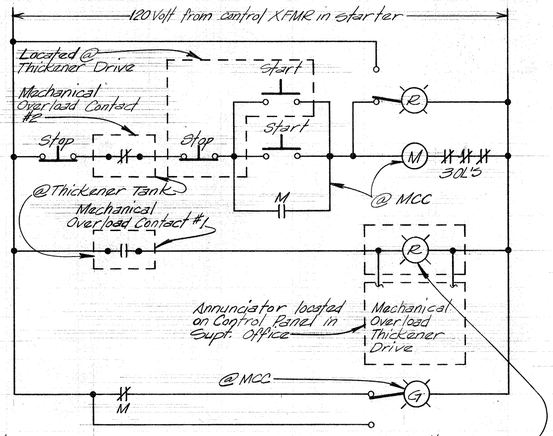

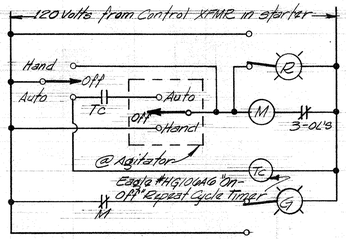

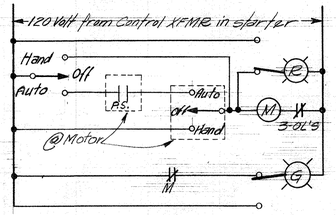

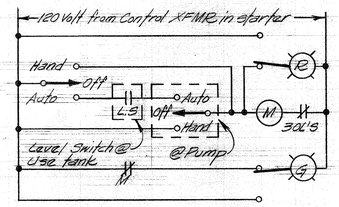

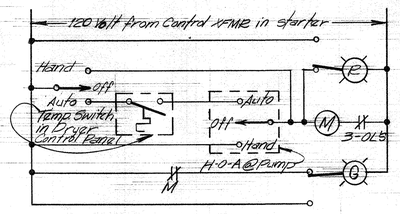

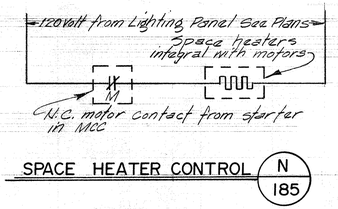

STATE OF TEXAS — KENNETH R. LINDSEY — 31158 — REGISTERED PROFESSIONAL ENGINEER

STATE OF TEXAS — LARRY M. BARFIELD — 39337 — REGISTERED PROFESSIONAL ENGINEER

CITY OF HOUSTON
DEPARTMENT OF PUBLIC WORKS

ALMEDA SIMS
SLUDGE DISPOSAL
PLANT - 1973

ELECTRICAL
CONTROL SCHEMATICS

RECOMMENDED FOR APPROVAL:
Kenneth R. Lindsey
BINKLEY & HOLMES, INC., CONSULTING ENGINEERS

APPROVED:
CHIEF ENGINEER — ASST. CHIEF ENGINEER
ASST. DIRECTORS OF PUBLIC WORKS
DIRECTOR OF PUBLIC WORKS

DESIGNED BY: L.M.B
DRAWN BY: R.D.W.
CHECKED BY: L.M.B.
SCALE: NONE
DATE: MARCH, 1977
SHEET 185 OF 200 SHEETS
DRAWING NO. 18045

REV. No.	DATE	DESCRIPTION	DESIGN	CHECKED
⚠	6/78	JOHN BEAM PUMP SCHEMATIC REMOVED REF. SH. 183-A.	D.P.	L.M.B.

Dry Vacuum Pump #1
Wet Vacuum Pump#1
Dry Vacuum Pump#2
Dry Vacuum Pump#3
Wet Vacuum Pump#2
Dry Vacuum Pump #4
Wet Vacuum Pump#3
125 H.P
60 H.P
LP 2B-1
LP 1B-1
From Ferric Chloride Storage Tanks
4'-0" Wide Pipe Trench For 8" & 10" Filtrate Lines And 4" Seal Water Drain Line
LP2B-13
LP1B-1 LP2B-1
Vacuum Pump Drain Seal PIT
M.H.
Seal Water Recirculation Pit
Sump Pumps - Duplex Unit 180 Gpm. @ 35'0" TDH, 5 HP. Motors @ 1750 R.P.M. 3Ø, 480V.
3 Pole Duplex Manual Motor Starters In Nema 4 Enclosure.
2B-36; - 3/4"C.
To MCC. 2B
LP 1B-25
1B-4; 2"C.
1B-5; 3/4"C.
2B-15; 3/4"C.
2B-14; 1 1/4"C.
LP 1B-24
2B-2; 2"C.
To M.C.C-2B
2B-3; 3/4"C.
2B-10; 1 1/4"C.
2B-11; 3/4"C.
1B-3; 3/4"C.
1B-2; 2"C.
To M.C.C-1B
2B-4; 2"C.
2B-5; 3/4"C.
1B-7; 3/4"C.
1B-6; 1 1/4"C.
LP 2B-24
LP1B-2 LP2B-2
LP2B-3
LP1B-3 LP2B-3
LP1B-25, 26, 27, 28
LP2B-25
LP1B-21, 22. LP2B-19, 20.
6#12-3/4"C TO LP#2
T-STAT.
480V, 60A, 3P, 4W TWIST LOCK RECEPT. CROUSE HINDS, APPLETON OR APPROVED EQUAL @ ELEV 57.5'
2B-43; 1"C
TO MCC-2B
480V, 60A, 3P, 4W, TWIST LOCK RECEPTACLE, CROUSE HINDS, APPLETON OR APPROVED EQUAL @ ELEV 57.5'
1B-39; 1"C
TO MCC-1B
SEE PIPING DWGS. FOR FERRIC CHLORIDE LINES TO BE WRAPPED WITH HEAT CABLE & INSUL. TAPE. SEE SPEC. PROVIDE 4 CIRCUITS OF 1200 W. EACH TO LIGHT PANELS. SEE SHEET 184
Plant Air Compressors
Filter Air Blowers
Instrument Air Compressor #3
1B-15; 1"C.
To M.C.C-1B
Air Dryer #3 LP1B#34
ON-OFF SEL. SW.
1B-18; 1"C.
2B-20; 1"C.
1B-19; 1"C.
M.C.C-1B
M.C.C-2B
M.C.C-1B
2B-18; 1"C.
Blower #1
Blower #2
Blower #3
1B-17; 1"C.
2B-19; 1"C.
TO M.C.C.#2B
TO M.C.C.#1B
TO M.C.C.#2B
LP1B-4 LP2B-4
LP1B-5 LP2B-5
7' O Dia. Plant Water Tank Accurox. 3000 Gal.
#1 #2 #3 60 H.P
PLANT WATER PUMP (TYPICAL)
1B-11; 3/4"C.
1B-10; 1 1/4"C.
LP 1B-7
LP1B-7 LP2B-7
LP 1B-13
LP1B-14 LP2B-14
UP
FCV-9
FCV-8
PB
LP 1B-31
Plant Water Control Rack To Polymer
JB-2B, see Note: 2
LP1B-6 LP2B-6
1B-16; 1"C.
TO MCC #1B
LP2B-6
20HP #1
20HP #2
M.C.C2B
TO MCC #2B Air Lift Blowers
TO MCC #2B
TO MCC #1B
TO MCC #1B
TO M.C.C.#2B
2B-17; 1"C.
Air Lift Chamber
Air Dryer #2 LP2B#33
Air Lift Chamber
1B-14; 1"C
2B-16; 1"C.
Polymer Pumps
1B: 32; 3/4"C.
2B - 32; 3/4"C.
1 1/2 H.P #1
1 1/2 H.P #2
TO MCC #2B
TO MCC #1B
1B-1; 4-4"C.
1B-43; 1-4"C.
Control Cabinet
1-1"C Inst To Supt. Office
Plant Water Control Rack To Ferric Caloride See Sht 188
2B-1; 4-4"C.
1-1"C from Terminal Board In MCC Room.
TO POWER CENTER #2
1B-43; 1-4"C.
JB-1B
TO POWER CENTER #1
1B-1; 4-4"C.
TO M.C.C.#1B
1B-13; 3/4"C.
1B-12; 1 1/4"C.
LP1B26
Sludge Holding Tank Blowers
2B-12; 1 1/2"C.
2B-13; 3/4"C.
#1 #2
Instr. Air #2 Comp.
Instr. Air #1 Comp.
LP2B#34
Air Dryer #1
Polymer Concentrated Storage Tank.
Polymer Concentrated Storage Tank
Polymer Diluted Use Tank
Ferrick Chloride Diluted Use Tank
See Sheet - 188 For Rest Room Electrical Details.
SLUDGE DENSITY MEASUREMENT
LP 1B-27
MANUAL STARTER FOR 3/4 H.P MOTOR
Number
Start
Stop
ON-OFF SELECTOR SWITCH
MCC #1B & #2B @ EL. 70.5'
Ferric Chloride Dilution System Rack See Sht #118
3-2"C. From CPB #7 To PB Then To Telephone TB in MCC Room @ El 70.50
10'-0"
20'-0"
22'-6"
22'-6
20'-0"
10'-0"
103'-0"
3'-0"
4'-0" (Typ)
12'-6"
9'-6"
9'-0"
9'-6"
9'-0"
9'-6"
17'-6"
17'-6"
10'-0"
10'-0"
10'-0"
20'-0"
11'-3"
11'-3"
N

NOTES:
1.) STUB-UP CONDUITS ADJACENT TO EQUIPMENT BASE. IN ALL CASES.
2.) J.B. - 1B & 2B TO BE GALVANISED STEEL SIZED AS PER NEC & MOUNTED @ ELEV. 55.0'
3.) ALL LIGHTING CONDUITS & LUMINAIRES TO BE RUN EXPOSED & MOUNTED ON CEILING, BEAMS RESPECTIVELY.
4.) ALL CONDUITS TO ENTER MCC 1B & 2B FROM BELOW FILTER ROOM FLOOR AND TURN UP THROUGH SLAB. CONTRACTOR SHALL CO-ORDINATE OPENINGS IN SLAB WITH MOTOR CONTROL CENTERS SUPPLIER.

REV NO	DATE	DESCRIPTION	DESIGN	CHECKED
3	6-79	SLUDGE AIR LIFT BLOWER HP'S CHANGED TO 20 HP	D.P.	L.M.B.
2	6/78	ADDED TELEPHONE CONDUIT.	D.P.	L.M.B.
1	3-77	LIGHTING CHANGED TO HIGH PRESSURE SODIUM, ADDED POLYMER PUMPS, LARGER VACCUM PUMPS, M.C.C.S, BRANCH CKT. NOS, JUNCTION BOXES, MOTOR SPACE HEATER.	L.M.B.	L.M.B.

W. O. RAY 4632 REGISTERED PROFESSIONAL ENGINEER
PAUL R. HOLMES 27638 REGISTERED PROFESSIONAL ENGINEER

CITY OF HOUSTON
DEPARTMENT OF PUBLIC WORKS

ALMEDA-SIMS SLUDGE DISPOSAL PLANT-1973

FILTER ROOM ELECTRICAL PLAN ELEVATION 54.50

RECOMMENDED FOR APPROVAL:
BINKLEY & HOLMES, INC., CONSULTING ENGINEERS

APPROVED:
CHIEF ENGINEER — ASST. CHIEF ENGINEER
ASST. DIRECTORS OF PUBLIC WORKS
DIRECTOR OF PUBLIC WORKS

DESIGNED BY: W. O. R.
DRAWN BY: D. HOGAN
CHECKED BY: W. O. R.
SCALE: 1/4" = 1'-0"
DATE: DEC 1973
SHEET 186 OF 200 SHEETS
DRAWING NO. 18045

160

MICROFILMED APR 10 1975

105'-0"

10'-0" | 20'-0" | 22'-6" | 22'-6" | 20'-0" | 10'-0"

12'-0"

3A-3; 1"C TO MCC #3A

3A-4, 1"C TO MCC #3A

CP1A-11

11'-2"

PUMP CONTROL PANEL FOG. FIRE PUMP #2

FOG. FIRE PUMP #1

25 H.P.

25 H.P.

HOA

WATER TANK

LP1B-8 LP2B-8

RECPT.

1H.P.

TO M.C.C. #2A

1B-34; 3/4"C.

1B-27; 3/4"C.

1B-24; 3/4"C.

TO MCC # 1B

LP 1B-30

Vacuum Filter Unit No. 2

Drive

LP1B-8 LP.2B-8

2B-22; 3/4"C.

TO MCC #2B

RVF-2

LP#2

FLEX. CORD— 4 CONDUCTOR

LP.1B-8 LP.2B8

1B-28; 3/4"C.

1B-35; 3/4"C.

1B-25; 3/4"C.

To MCC-1B

LP 1B-32

CABLE REEL FOR 7½ HP-3ϕ-460V. MONORAIL HOIST

1B-20; 3/4"C

TO MCC #1B

Vacuum Filter Unit No. 4

Drive

LP.1B-8 LP.2B-8

AGITATOR (TYPICAL)

RECPT.

FLEX. CORD— 4 CONDUCTOR

FLOCCULATOR (TYPICAL)

Polymer And Ferrix Chloride Pipe Rack (TYP.)

Flocculator Control Cabinet (TYPICAL)

2B-25; 3/4"C.

TO MCC-2B

LP 2B-30

Vacuum Filter Unit No. 6

Drive

2B-35; 3/4"C.

2B-29; 3/4"C.

Sludge Sonic Meter @ El. 67.25 (TYP.)

Ultra Sonic Flow Meter (TYP.)

1"C. Inst. Sig. Cond.

LP2B-8 LP1B-8

LP2B-9 LP1B-9

5 HP ROOF VENT FAN #1 (RVF-1)

3P 30A DISC. SW. (TYP. FOR 3 FANS)

1B-21; 3/4"C

TO MCC #1B

Vacuum Filter Unit No. 1

Drive

LP.1B-9 LP.2B-9

CABLE REEL FOR 7½ HP-3ϕ-460V. MONORAIL HOIST

2B-21; 3/4"C

TO MCC #2B

Vacuum Filter Unit No. 3

Drive

LP1B-9 LP2B-9

RVF-3

1B-22; 3/4"C TO MCC #1B

Vacuum Filter Unit No. 5

Drive

LP1B-10 LP2B-10

1B-23; 3/4"C.

1B-26; 3/4"C.

1B-33; 3/4"C.

MCC-1B

1H.P.

TO MCC #1B

RECPT.

LP2B-10

LP 1B-29

LP1B-10 LP2B-10

2B-23; 3/4"C.

2B-27; 3/4"C.

TO MCC #2B

2B-33; 3/4"C.

CABLE REEL FOR 2 HP-3ϕ-460V. MONORAIL HOIST

LP 2B-29

2B-24; 3/4"C.

2B-28; 3/4"C.

To MCC-2B

2B-34; 3/4"C.

LP2B-10

LP 1B-10

LP2B-31

Jib Crane Note: Jib Crane Mfgr. Plate Mounted On Wall Cap. 2ton @ 5'-6" From Wall W/ 2 Hyd. Cyl.

14'-0" X 14'-0" Opening

17'-6"

2B-31; 3/4"C TO MCC #2B

ENTERING & EXISTING COMMUNICATION CONDUITS

1B-31; 3/4"C TO MCC #1B

Wall Mounted Thermostat For Exhaust Fan

LP.2B-15,17

LP. 1B-17-19

LP. 1B-12

LP 2B-21

11'-5"

11'-3"

10'-0"

Down

Up

42 CKT. 120/240 V., 1ϕ, 3W. S/N. NEMA 1, WALL MTD. L.P. #2B

42 CKT. 120/240 V, 1ϕ, 3W. S/N. NEMA 1 WALL MOUNTED LIGHTING PANE #1B

37.5 KVA, 1ϕ, 480-120/240 V. DRY TYPE TRANSFORMER WALL MOUNTED ON TOP OF MCC

CAPACITOR MOUNTED ON TOP OF MCC (TYPICAL)

CABLE REEL FOR 2 HP-3ϕ-460 V. JIB CRANE

LP. 1B-23

EXH. FAN (TYP.)

PB 4"x6" TELEPHONE TERMINAL BOARD

37.5 KVA, 1ϕ, 480-120/240 V. Dry Type Transformer Wall Mounted On Top Of MCC.

Capacitor Mounted on Top of M.C.C.

MOUNTED @ ELEV 100-0

LUNCH ROOM SEE SHT. NO. 188

SUPERINTENDENTS OFFICE SEE SHT. NO. 188

CONSTANT HEAD TANK (Typical) Mounted @ El. 94.0

Constant Head Tank Transmitter @ El. 87.5' See sht. B 178

Mounted @ El. 100.0

SLUDGE HOLDING TANK

1-1"C. Inst Sig. Cond high & low level alarm contacts & Sludge level / density Xmitter to Supt. Office

Sludge Level Indicator Transmitter @ EL. 87.5

Inst Sig. Conds. From Sludge level Indicator Transmitter & Flowmeter, To Control Room Recorder & Indicator

Sludge Flowmeter (FEB) @ El. 61.00

LP 1B-33

M.C.C. #1B

M.C.C. #2B

FILTER EQUIPMENT MOTOR CONTROL CENTER ROOM

A/C Unit

A/C Unit

10'-0" | 20'-0" | 11'-3" | 11'-3"

9'-6" | 9'-0" | 9'-0" | 9'-6" | 9'-6"

10'-0" | 10'-0"

NOTES

1. ALL OVERHEAD LIGHTING CONDUITS IN FILTER ROOM TO BE CARRIED EXPOSED IN ROOF STRUCTURAL MEMBERS.
2. TYPE "A" & "A1" LUMINAIRES THIS SHT MOUNTED ON THOMPSON, APPLETON OR APPROVED EQUAL, HANGERS BELOW ROOF SLAB. LOWERING CABLES AND ENCLOSING CONDUITS TO BE MOUNTED ON ADJACENT COLUMNS & WALLS AS DIRECTED.
3. FLOODLIGHT FIXTURES "G" & "H" ARE TO BE MOUNTED AT SAME ELEV. ON OUTSIDE WALL OF FILTER ROOM & DRYER ROOF HANDRAILS.
4. ALL CONDUITS TO EQUIPMENT DRIVE & RECEPTACLES ETC. TO BE RUN EXPOSED BELOW FILTER ROOM FLOOR & TURNED UP THROUGH SLAB AT MOTOR LOCATIONS; CONTRACTOR SHALL CO-ORDINATE OPENINGS IN SLAB WITH MOTOR CONTROL CENTERS AND MECHANICAL EQIPMENT SUPPLIERS.

STATE OF TEXAS W. O. RAY 4632 REGISTERED PROFESSIONAL ENGINEER

STATE OF TEXAS PAUL R. HOLMES 27638 REGISTERED PROFESSIONAL ENGINEER

CITY OF HOUSTON
DEPARTMENT OF PUBLIC WORKS

ALMEDA-SIMS SLUDGE DISPOSAL PLANT-1973

FILTER ROOM ELECTRICAL PLAN ELEVATION 70.50

RECOMMENDED FOR APPROVAL:
W. O. Ray
BINKLEY & HOLMES, INC., CONSULTING ENGINEERS

APPROVED:
CHIEF ENGINEER — ASST. CHIEF ENGINEER
ASST. DIRECTORS OF PUBLIC WORKS
DIRECTOR OF PUBLIC WORKS

DESIGNED BY: W.O.R
DRAWN BY: D.HOGAN
CHECKED BY: W.O.R
SCALE: 1/4" = 1'-0"
DATE: DEC. 1973
SHEET 187 OF 200 SHEETS
DRAWING NO. 18045

REV No	DATE	DESCRIPTION	DESIGN	CHECKED
3	6/78	ADDED FOG FIRE PUMP RELOCATED TELEPHONE TERMINAL TO M.C.C ROOM.	D.P.	L.M.B.
2	3-77	LIGHTING CHANGED TO HIGH PRESSURE SODIUM; ADDED MOTOR CONTROL CENTER ROOM; CKT. No.5 TO MOTOR CKTS.	L.M.B.	L.M.B.
1	4-76	REVISED H.P. RATING OF MONORAIL HOIST & JIB CRANE	L.M.B.	L.M.B.

MICROFILMED APR 20 1978

Note: All receptacles and switches flush mounted except as shown.

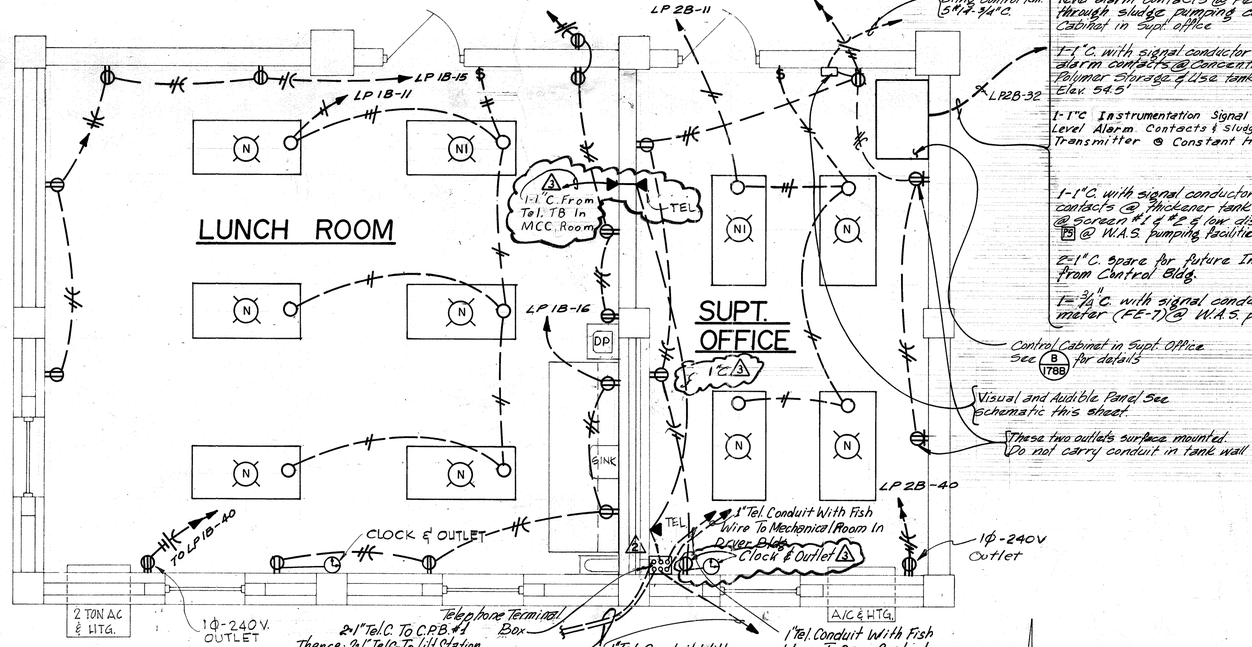

⚠ ELECTRICAL PLAN-SECOND FLOOR

SCALE: 3/8"=1'-0"

A / 188

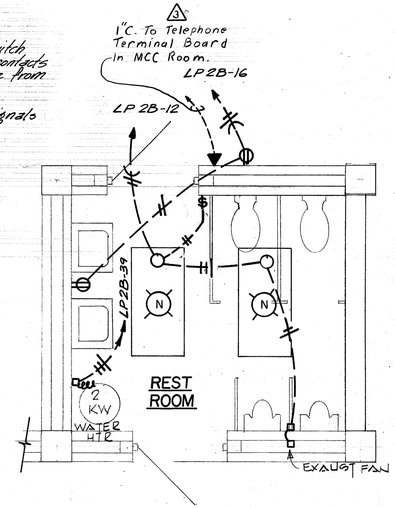

⚠ ELECTRICAL PLAN-FIRST FLOOR

SCALE: 3/8"=1'-0"

B / 188

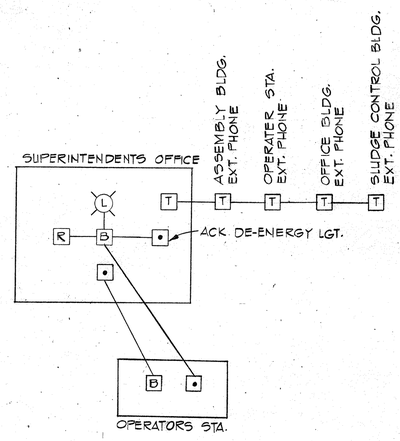

C / 188 VISUAL AND AUDIBLE SIGNAL SCHEMATIC

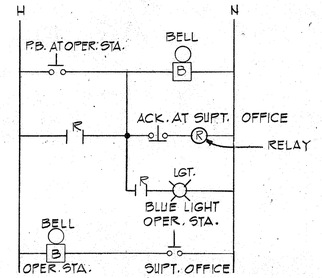

TYPICAL SCHEMATIC FOR VISUAL AND AUDIBLE SIGNALS

F / 188

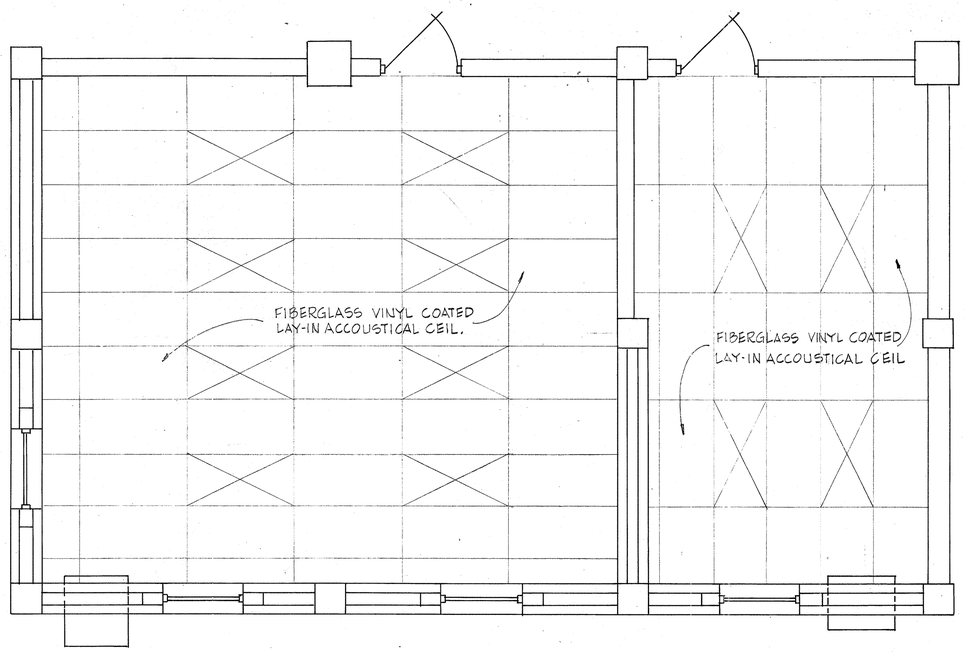

SUSPENDED CEILING PLAN - SECOND FLOOR

SCALE: 3/8"=1'-0"

D / 188

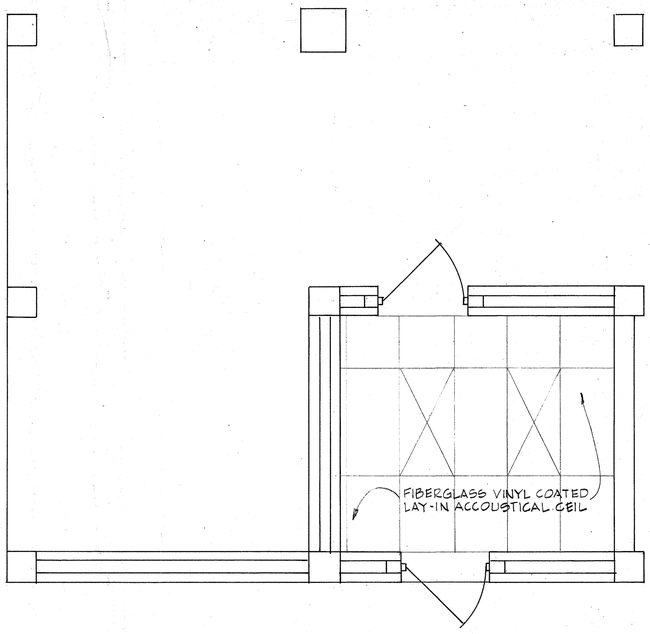

SUSPENDED CEILING PLAN-FIRST FLOOR

SCALE: 3/8"=1'-0"

E / 188

REV No.	DATE	DESCRIPTION	DESIGN	CHECKED
⚠3	6/78	RELOCATE TELEPHONE TERMINATION EQUIPMENT TO MCC ROOM. ADD TELEPHONE OUTSIDE REST ROOM.	D.P.	L.M.B.
⚠2	6-77	REVISED TELEPHONE BOX LOCATION IN SUPT. OFFICE.	D.P.	L.M.B.
⚠1	3-77	ADDED CONTROL CABINET IN SUPT., OFFICE, POWER & SIGNAL CONDUITS & CONDUCTORS	D.P	L.M.B

CITY OF HOUSTON
DEPARTMENT OF PUBLIC WORKS

ALMEDA-SIMS SLUDGE DISPOSAL PLANT-1973

SUPERINTENDENTS OFFICE LUNCH & RESTROOM ELECTRICAL PLAN

RECOMMENDED FOR APPROVAL:
W.O. Ray
BINKLEY & HOLMES, INC. CONSULTING ENGINEERS

APPROVED:
Hattie Williams
CHIEF ENGINEER — ASST. CHIEF ENGINEER
ASST. DIRECTORS OF PUBLIC WORKS
E.B. Bare
DIRECTOR OF PUBLIC WORKS

DESIGNED BY: W.O.R.
DRAWN BY: M.MUNIZ
CHECKED BY: W.O.R.
SCALE: AS SHOWN
DATE: DEC. 1973
SHEET 188 OF 200 SHEETS
DRAWING NO. 18045

STATE OF TEXAS W. O. RAY 4532 REGISTERED PROFESSIONAL ENGINEER

STATE OF TEXAS PAUL R. HOLMES 27638 REGISTERED PROFESSIONAL ENGINEER

162

APR 10 1974

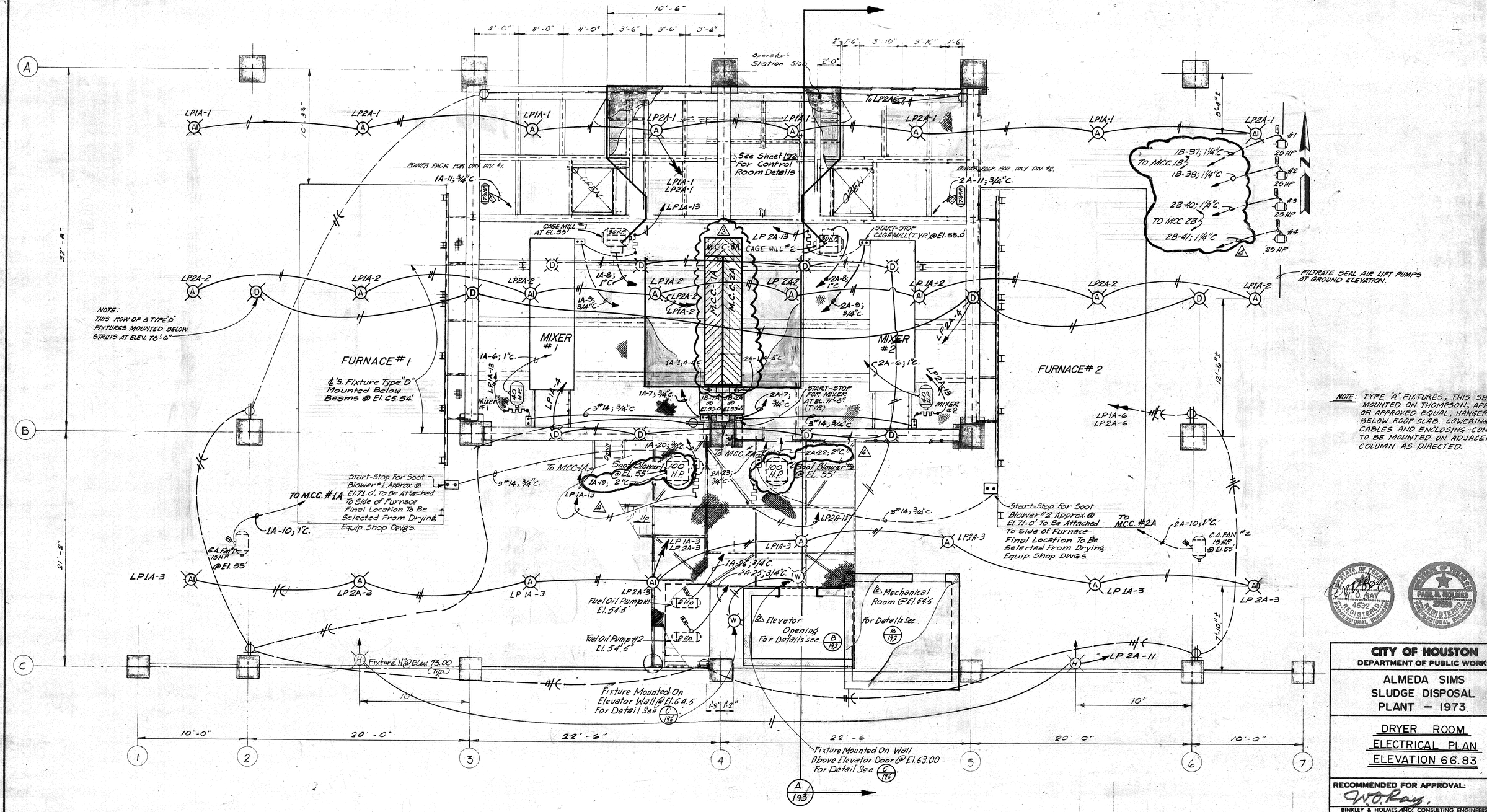

NOTE: TYPE "A" FIXTURES, THIS SHEET MOUNTED ON THOMPSON, APPLETON OR APPROVED EQUAL, HANGERS BELOW ROOF SLAB, LOWERING CABLES AND ENCLOSING CONDUITS TO BE MOUNTED ON ADJACENT COLUMN AS DIRECTED.

⚠ PLAN AT ELEVATION 66.83 (T.O.G.) (A 189)

(Top Of Steel Elevation 66.71)

REV.	DATE	DESCRIPTION	DESIGN	CHECKED
4	6-79	SOOT BLOW. HP INCREASED TO 100. FITRATE SEAL AIRLIFTS TO BE SERVED FROM MCC'S 1B AND 2B	D.P.	L.M.B.
3	6-78	Rearrange MCCs To Accommodate MCC-3A	D.P.	L.M.B.
2	6-77	Revised Elevator, And Mechanical Room, Moved Fuel Oil Pumps	D.P.	L.M.B.
1	3-77	Revised Dryer Control Room, Added lights at lower Elevation, Added Soot Blowers	D.P.	L.M.B.

STATE OF TEXAS — W. O. RAY — 4632 — REGISTERED PROFESSIONAL ENGINEER

PAUL M. HOLMES — 3980 — REGISTERED PROFESSIONAL ENGINEER

CITY OF HOUSTON
DEPARTMENT OF PUBLIC WORKS

ALMEDA SIMS SLUDGE DISPOSAL PLANT – 1973

DRYER ROOM ELECTRICAL PLAN ELEVATION 66.83

RECOMMENDED FOR APPROVAL:
W.O. Ray
BINKLEY & HOLMES, INC. CONSULTING ENGINEERS

APPROVED:
Walter Williams — CHIEF ENGINEER — ASST. CHIEF ENGINEER
ASST. DIRECTORS OF PUBLIC WORKS
E.B. Cape — DIRECTOR OF PUBLIC WORKS

DESIGNED BY: W.O.R.
DRAWN BY: D. HOGAN
CHECKED BY: W.O.R.
SCALE: 1/4" = 1'-0"
DATE: DEC. 1973
SHEET 189 OF 200 SHEETS
DRAWING NO. 18045

MICROFILMED APR 10 1978

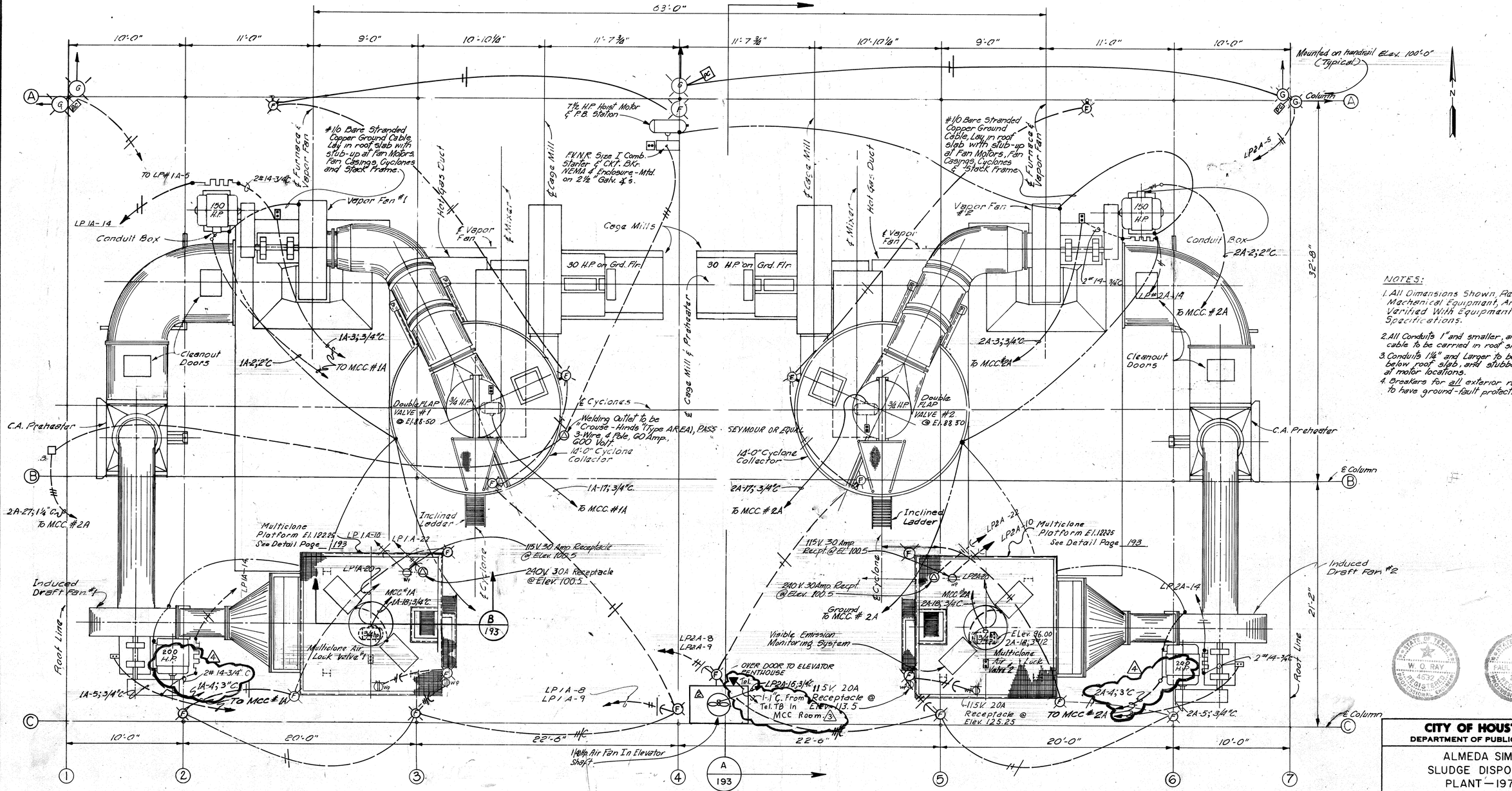

NOTES:

1. All Dimensions Shown, Related To Mechanical Equipment, Are To Be Verified With Equipment M.fr's Specifications.
2. All Conduits 1" and smaller, and grounding cable to be carried in roof slab.
3. Conduits 1¼" and Larger to be carried below roof slab, and stubbed through at motor locations.
4. Breakers for all exterior receptacles to have ground-fault protection.

⚠ DRYER ROOM-EQUIPMENT ELECTRICAL PLAN

REV NO.	DATE	DESCRIPTION	DESIGN	CHECKED
⚠4	6-79	I.D. FAN H.P. INCREASED TO 200 H.P.	D.P.	L.M.B.
⚠3	6-78	ADD TELEPHONE OUTSIDE ELEVATOR PENTHOUSE.	D.P.	L.M.B.
⚠2	6-77	Removed Elevator Drive to Mechanical Room @ El. 54.5 Added Air Fan.	D.P.	L.M.B.
⚠1	3-77	Added Multiclones & Assoc. Instrumentation, Design-ations, Removed Lig. Sched.	D.P.	L.M.B

CITY OF HOUSTON
DEPARTMENT OF PUBLIC WORKS

ALMEDA SIMS
SLUDGE DISPOSAL
PLANT — 1973

SLUDGE DRYING EQUIPMENT
ROOF ELEVATION
ELECTRICAL PLAN

RECOMMENDED FOR APPROVAL:
W.O. Ray
BINKLEY & HOLMES, INC. CONSULTING ENGINEERS

APPROVED:
CHIEF ENGINEER — ASST. CHIEF ENGINEER
ASST. DIRECTORS OF PUBLIC WORKS
DIRECTOR OF PUBLIC WORKS

DESIGNED BY: W.O.R
DRAWN BY: D. HOGAN
CHECKED BY: W.O.R
SCALE: 1/4" = 1'-0"
DATE: DEC 1973
SHEET 190 OF 200 SHEETS
DRAWING NO. 18045

STATE OF TEXAS W. O. RAY 40372 REGISTERED PROFESSIONAL ENGINEER
STATE OF TEXAS PAUL R. HOLMES 36538 REGISTERED PROFESSIONAL ENGINEER

MICROFILMED APR 10 1978

Notes:

1.) Dashed line indicate Equipment furnished by others, Under separate Contract. With Electrical Connections being made Under this Contract.

2.) All conduits to Equipment drives to be run exposed below Filter & Dryer Room floor. Contractor shall Co-ordinate openings in slab with Motor control Centers & Mechanical Equipment Suppliers.

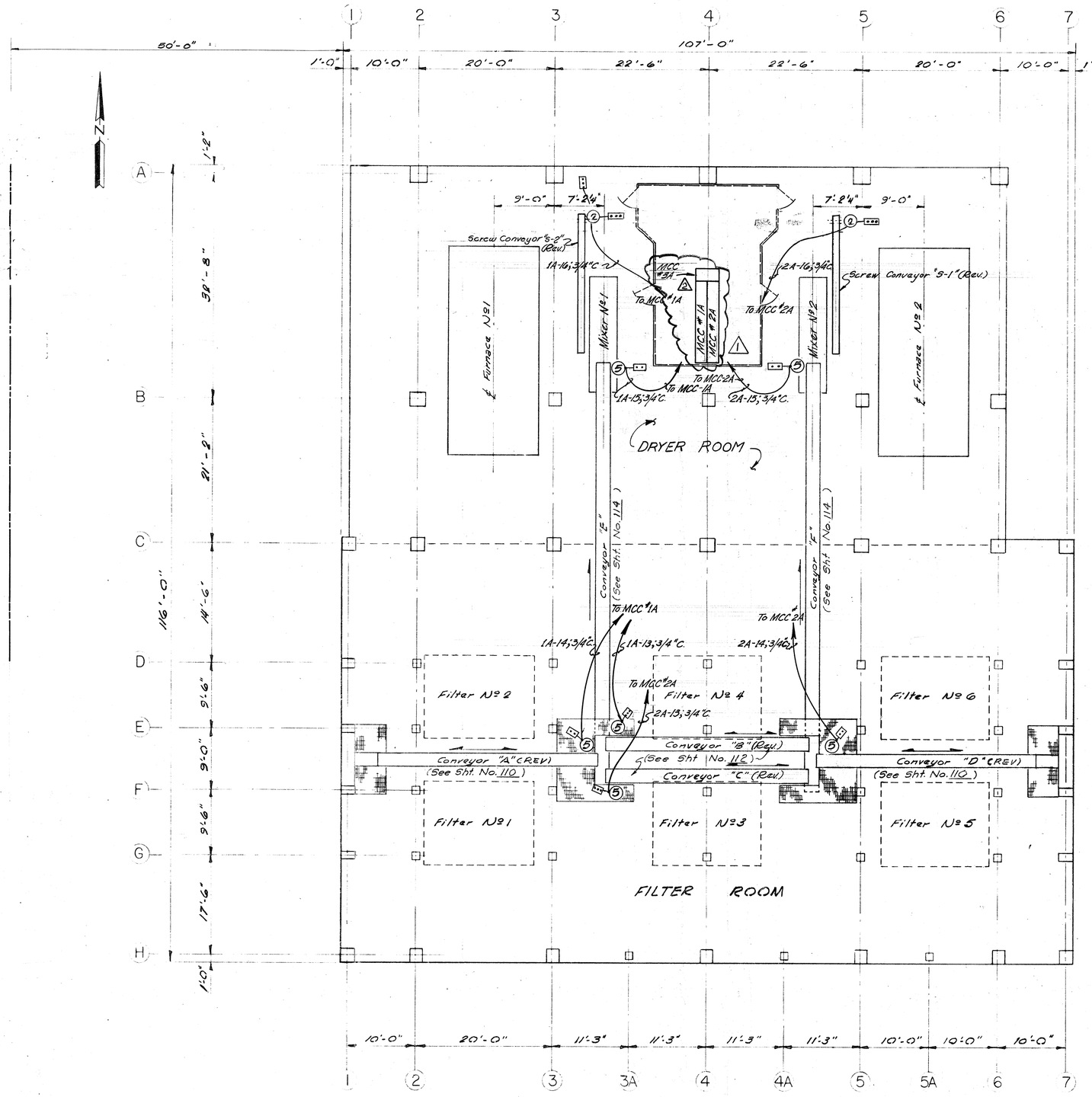

Product Storage & Loading Facilities (By Others)

⚠ PLAN A 191

REV. NO	DATE	DESCRIPTION	DESIGN	CHECKED
2	6/78	RE-ARRANGE MCC's TO ACCOMMODATE MCC-3A.	D.P.	L.M.B.
1	3-77	ADDED CONVEYOR S-4, RE-DISTRIBUTED LOADS BETWEEN MCC-1A & 2A, IDENTIFIED CIRCUIT BY NUMBERS.	L.M.B.	L.M.B.

CITY OF HOUSTON
DEPARTMENT OF PUBLIC WORKS

ALMEDA SIMS SLUDGE DISPOSAL PLANT – 1973

CONVEYORS "A" THRU "F" & "S-1" THRU "S-4" ELECTRICAL

RECOMMENDED FOR APPROVAL:
W O Ray.
BINKLEY & HOLMES, INC., CONSULTING ENGINEERS

APPROVED:
Hobby Hilliam
CHIEF ENGINEER — ASST. CHIEF ENGINEER
ASST. DIRECTORS OF PUBLIC WORKS
DIRECTOR OF PUBLIC WORKS

DESIGNED BY: W.O.R.
DRAWN BY: C.A. MARRULLIER
CHECKED BY: W.O.R.
SCALE: 3/8" = 1'-0"
DATE: Dec., 1973
SHEET 191 OF 200 SHEETS
DRAWING NO. 18045

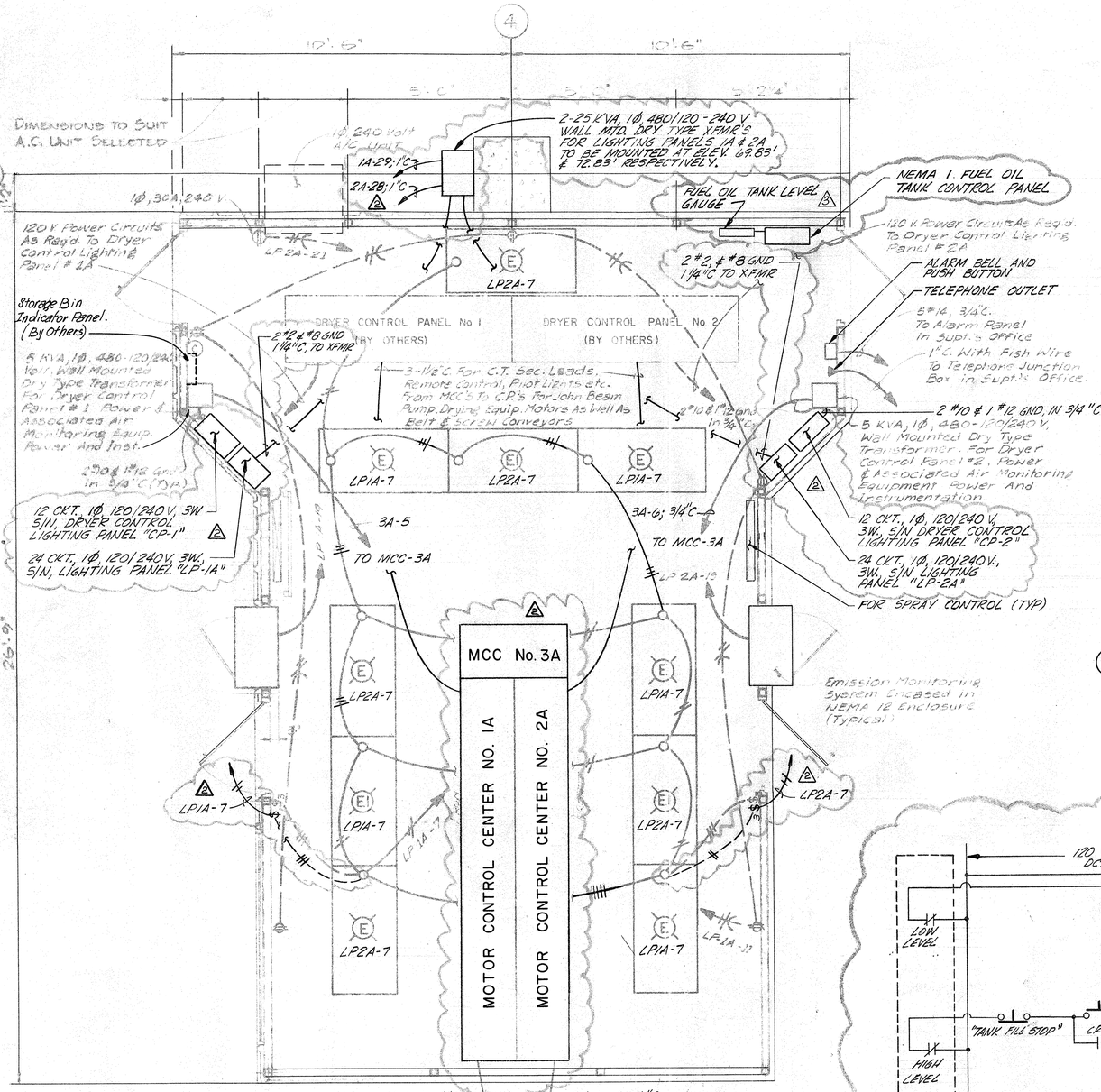

NOTES:
(1) ALL CONDUITS SHALL ENTER & EXIT MCC'S & CONTROL PANELS FROM THE BOTTOM, WITH CONDUITS BEING RUN EXPOSED BELOW CONTROL ROOM SLAB & GRATING ELEVATION.
(2) CONTRACTOR SHALL CO-ORDINATE EXACT SIZE & LOCATION OF OPENINGS IN SLAB WITH MANUFACTURERS OF MOTOR CONTROL CENTERS & CONTROL PANELS.
(3) SWITCHES & RECEPTACLES TO BE FLUSH MOUNTED.

DRYER CONTROL ROOM PLAN — A / 192

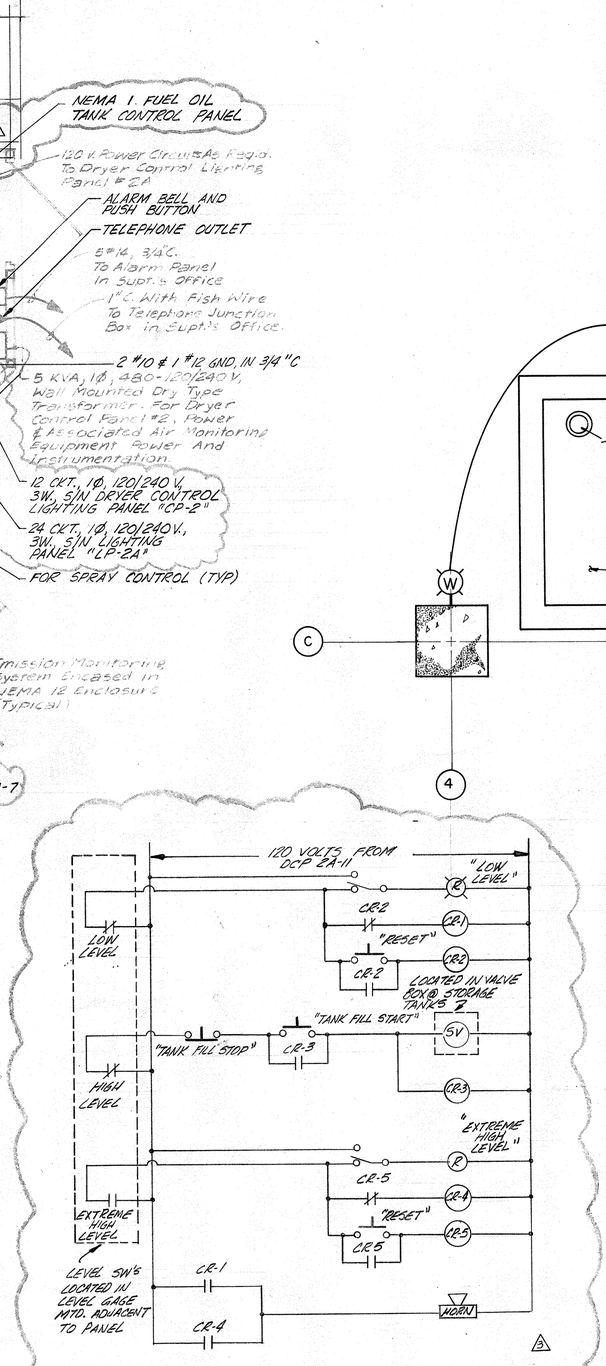

FUEL OIL TANK CONTROL PANEL
(LOCATED IN DRYER OPERATORS STATION)

NOTES:
(1) STATEMENTS WITHIN QUOTES INDICATE NAMEPLATE LEGENDS.
(2) FUEL OIL CONTROL PANEL TO BE SUPPLIED AS PACKAGE UNIT

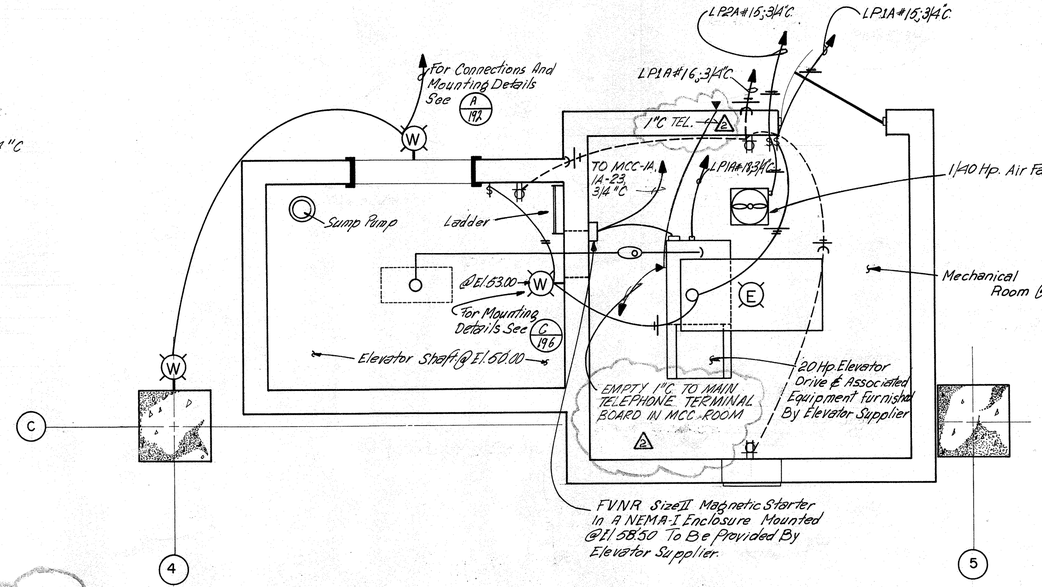

ELEVATOR SHAFT AND MECHANICAL ROOM PLAN — B / 192

REV.	DATE	DESCRIPTION	DESIGN	CHK
3	8/79	ADDED FUEL OIL TANK CONTROL PANEL AND TANK LEVEL GAGE TO DRYER CONTROL ROOM	D.P.	L.M.B.
2	6/78	GENERAL REVISION TO CONTROL ROOM. ADD TELEPHONE OUTSIDE MECHANICAL ROOM.	D.P.	L.M.B.
1	6-77	Added Elevator Shaft And Mechanical Room	D.P.	L.M.B.

CITY OF HOUSTON
DEPARTMENT OF PUBLIC WORKS

ALMEDA-SIMS SLUDGE DISPOSAL PLANT-1973

DRYER CONTROL ROOM PLAN, ELEVATOR SHAFT AND MECHANICAL ROOM PLAN, ELECTRICAL DETAILS.

RECOMMENDED FOR APPROVAL:
Kenneth R. Bingley
BINGLEY & HOLMES, INC. CONSULTING ENGINEERS

APPROVED:
CHIEF ENGINEER — ASST. CHIEF ENGINEER
ASST. DIRECTORS OF PUBLIC WORKS
DIRECTOR OF PUBLIC WORKS

DESIGNED BY L.M.B., D.P.
DRAWN BY A.R.
CHECKED BY L.M.B.
SCALE 1/2"=1'-0"
DATE MAR 1977
SHEET 192 OF 200 SHEETS
DRAWING NO. 18045

166

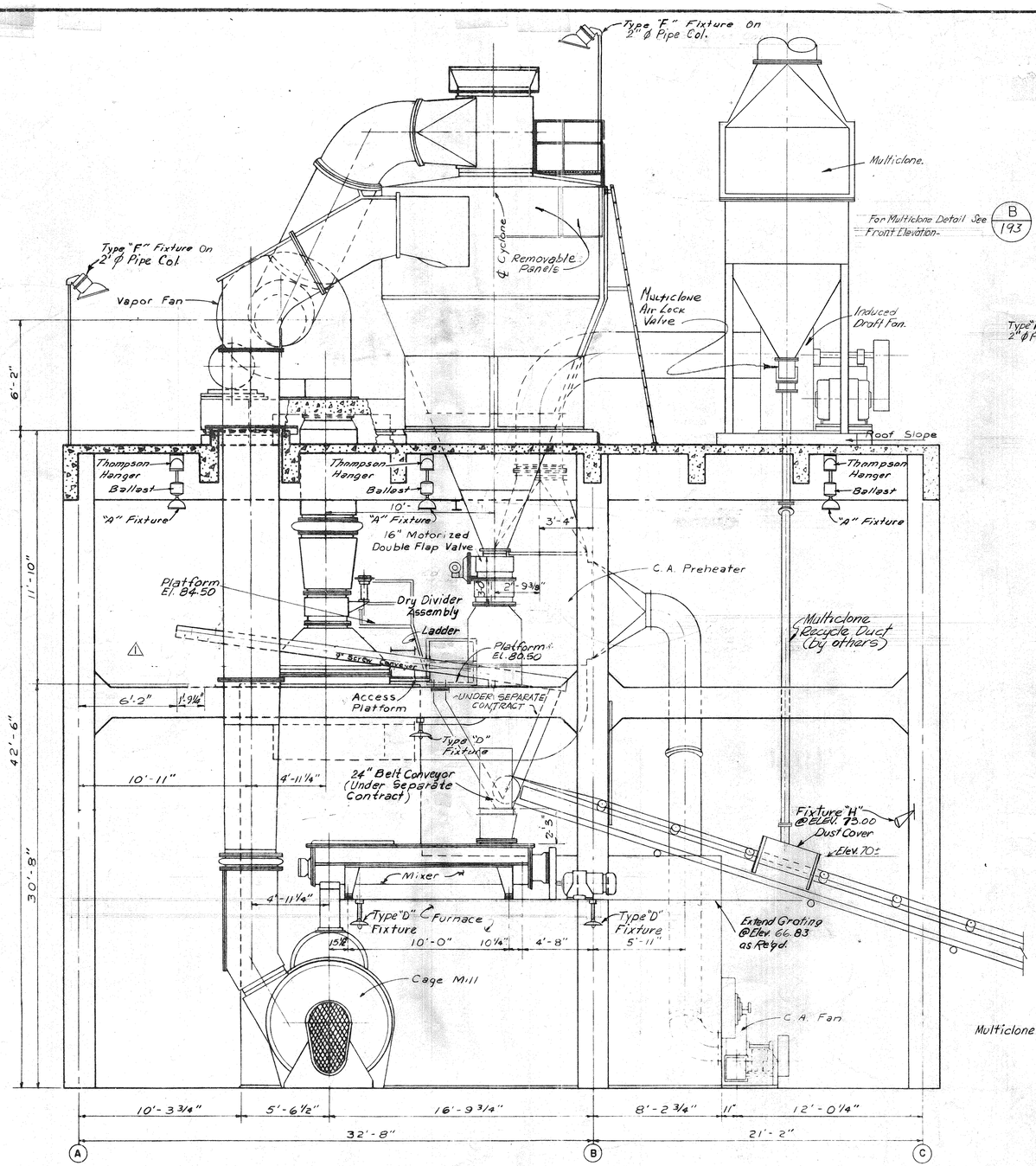

END ELEVATION

2 SECTION A 193

SCALE: 1/4" = 1'-0"

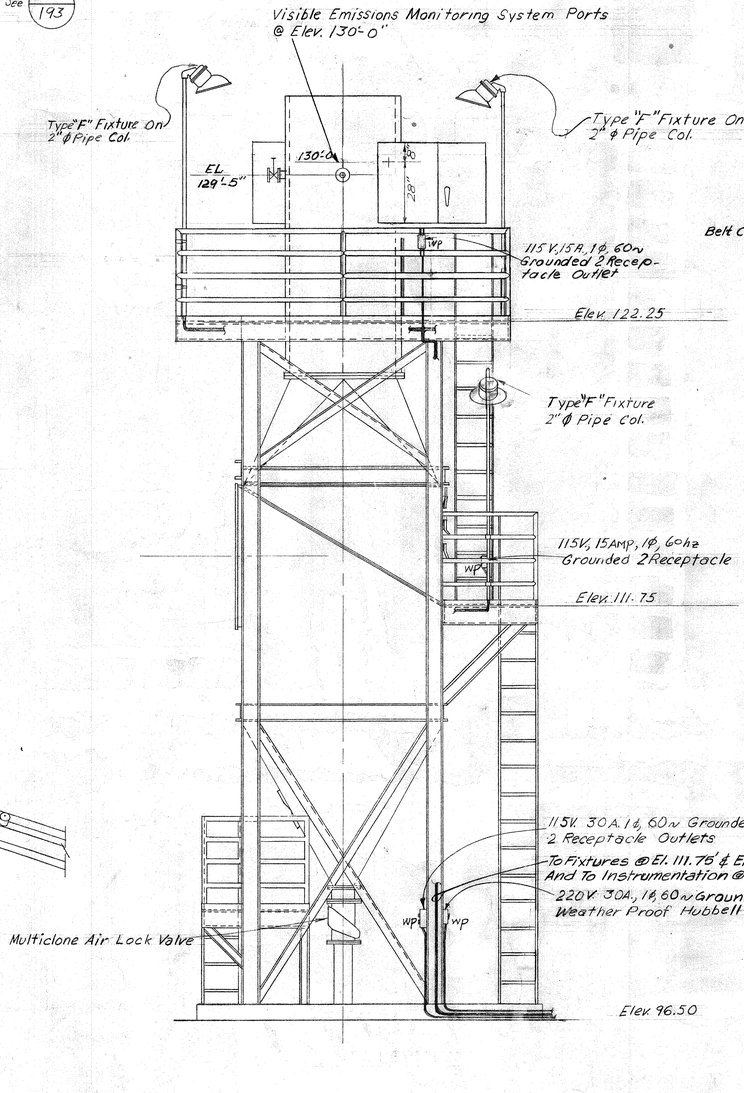

FRONT ELEVATION

2 TYPICAL MULTICLONE LADDER AND PLATFORM DETAIL B 193

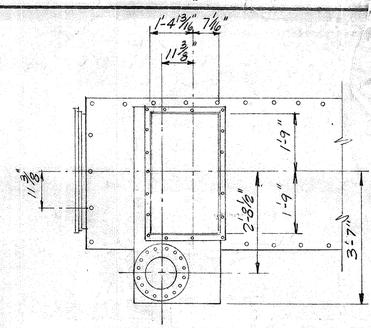

MIXER HOPPER PLAN

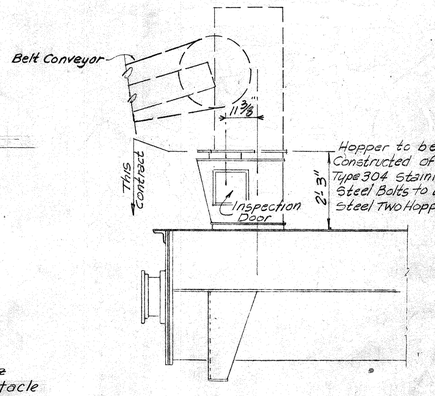

MIXER HOPPER DETAIL

Scale: 1/2" = 1'-0"

REV. NO.	DATE	DESCRIPTION	DESIGN	CHECKED
		ADDED MULTICLONE STRUCTURE & ASSOCIATED		
2	3-77	EMISSIONS MONITORING SYSTEM	L.M.B.	L.M.B.
1	1-77	SCREW CONVEYORS REVISED	L.V.C.	J.A.

STATE OF TEXAS — W. O. RAY — 4632 — REGISTERED PROFESSIONAL ENGINEER

STATE OF TEXAS — PAUL R. HOLMES — 27638 — REGISTERED PROFESSIONAL ENGINEER

CITY OF HOUSTON
DEPARTMENT OF PUBLIC WORKS

ALMEDA SIMS SLUDGE DISPOSAL PLANT – 1973

DRYER ROOM
ELECTRICAL DETAILS
LIGHTING

RECOMMENDED FOR APPROVAL:
W.O.Ray.
BINKLEY & HOLMES INC., CONSULTING ENGINEERS

APPROVED:
CHIEF ENGINEER — ASST. CHIEF ENGINEER
ASST. DIRECTORS OF PUBLIC WORKS
DIRECTOR OF PUBLIC WORKS

DESIGNED BY: W.O.R.
DRAWN BY: G. DORMAN
CHECKED BY: W.O.R.
SCALE: AS NOTED
DATE: December, 1973
SHEET 193 OF 200 SHEETS
DRAWING NO. 18045

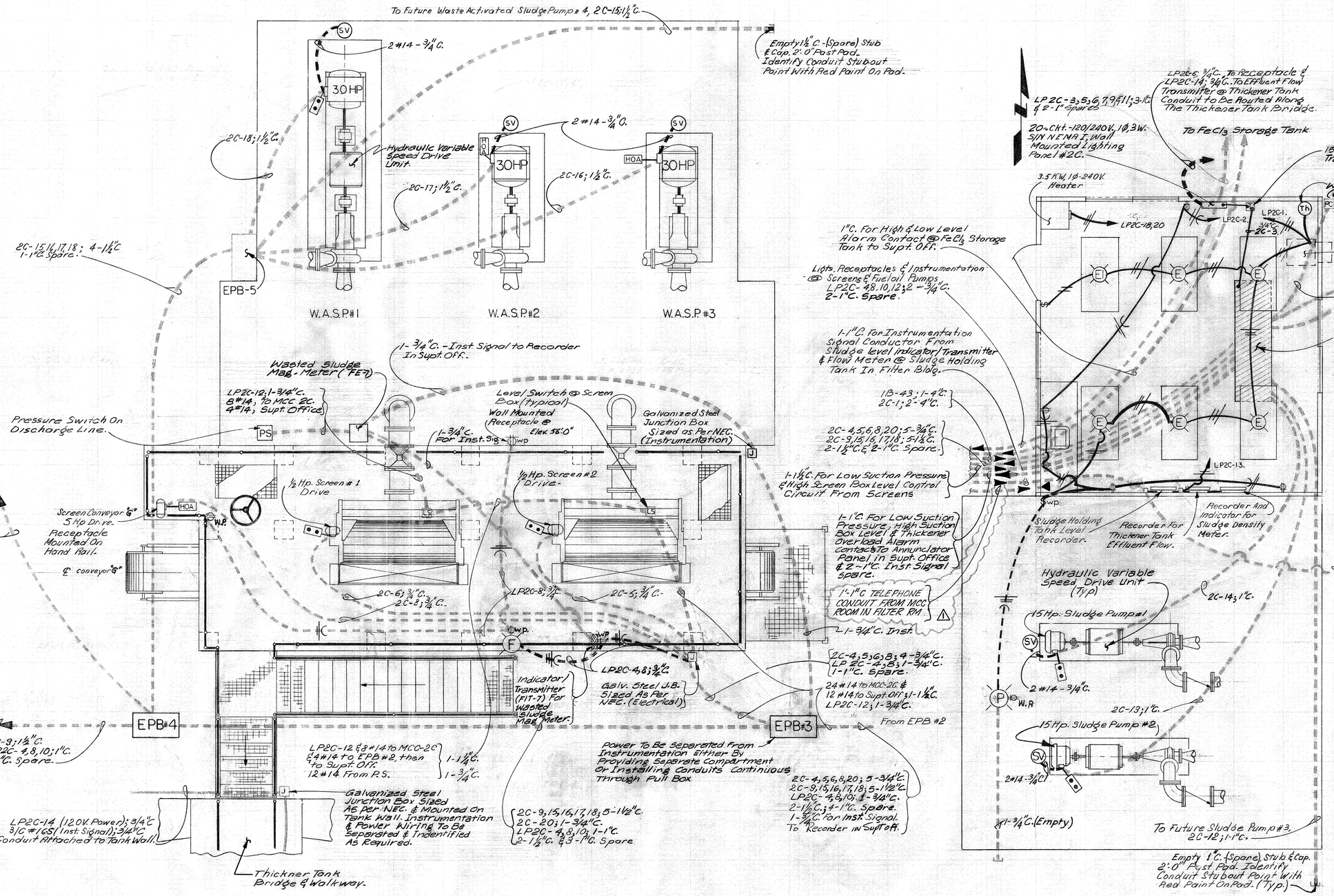

SCREENING FACILITIES AND WASTE ACTIVATED SLUDGE PUMPS — A / 194

CONTROL ROOM AND THICKENED SLUDGE PUMPS. — B / 194

⚠	6-78	TELEPHONE CONDUIT TERMINATION	D.P.	L.M.B.
REV NO	DATE	DESCRIPTION	DESIGN	CHECKED

STATE OF TEXAS — KENNETH R. LINDSEY — 31158 — REGISTERED PROFESSIONAL ENGINEER

STATE OF TEXAS — LARRY M. BARFIELD — 39337 — REGISTERED PROFESSIONAL ENGINEER

CITY OF HOUSTON
DEPARTMENT OF PUBLIC WORKS

ALMEDA SIMS SLUDGE DISPOSAL PLANT—1973

ELECTRICAL PLAN SLUDGE PUMPING AND SCREENING FACILITY

RECOMMENDED FOR APPROVAL: Kenneth R. Lindsey
BINKLEY & HOLMES, INC., CONSULTING ENGINEERS

APPROVED:

CHIEF ENGINEER — ASST. CHIEF ENGINEER

ASST. DIRECTORS OF PUBLIC WORKS

DIRECTOR OF PUBLIC WORKS

DESIGNED BY: L.M.B.
DRAWN BY: P.M.C.
CHECKED BY: L.M.B.
SCALE: 3/8"=1'
DATE: MARCH 1977
SHEET 194 OF 200 SHEETS
DRAWING NO. 18045

RECEIVED APR 10 1978

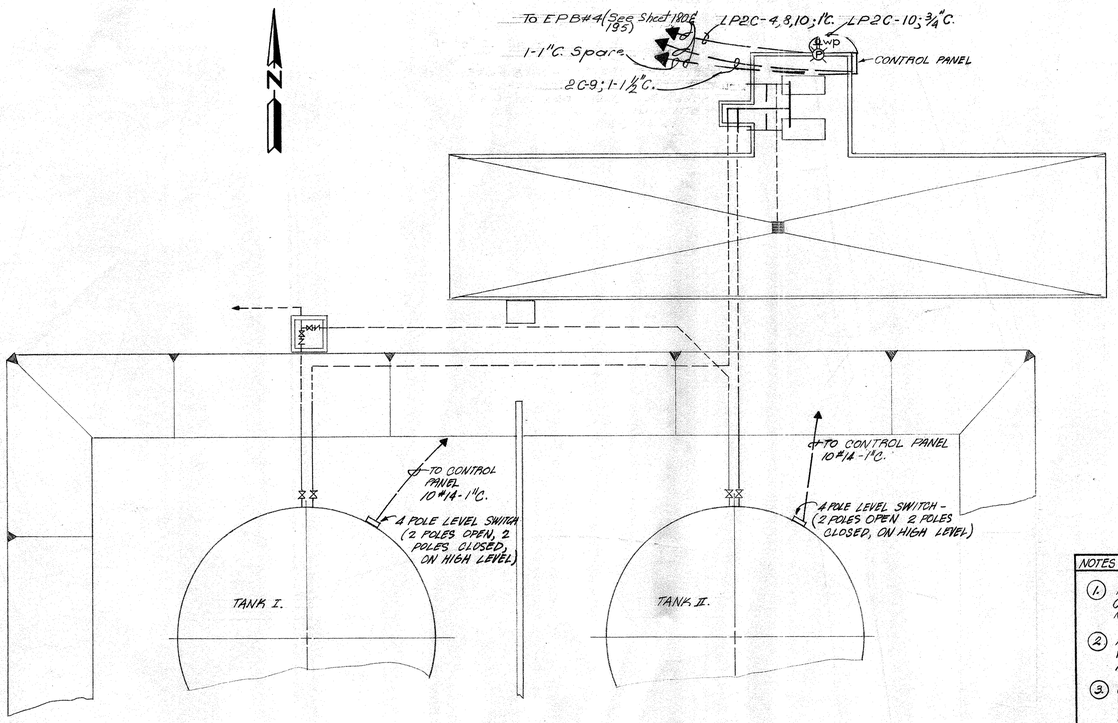

PLAN (A) 195
SCALE: 1"=10'

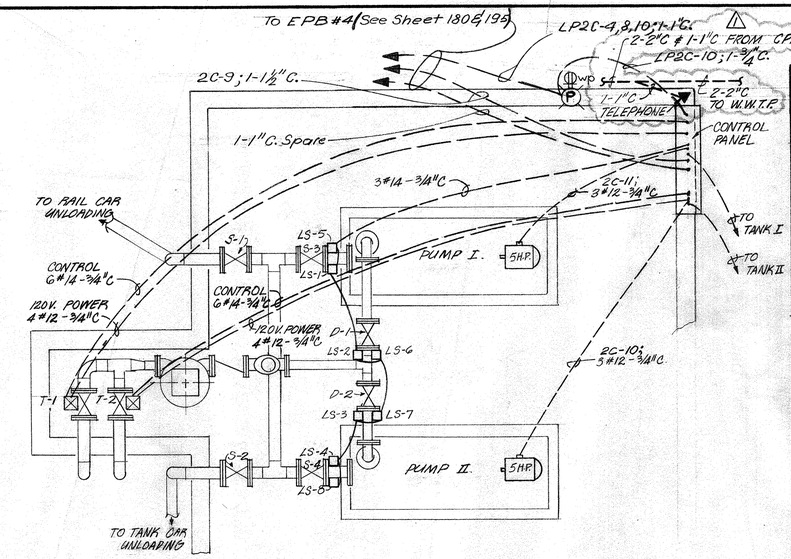

FUEL OIL PUMPS PIPING PLAN (B) 195
SCALE: 1/2"=1'-0"

NOTES

1. ALL WIRING SHALL COMPLY WITH CLASS I, GROUP D, DIVISION 2, OF NAT'L ELECT. CODE EXCEPT C. PANEL
2. ALL CONDUITS TO BE SEALED WHERE ENTERING SWITCHES, MOTORS, OR CONTROL PANEL.
3. CONTRACTOR TO PROVIDE GALVANIZED STEEL SUPPORT MEMBERS FOR CONTROL PANEL. ANCHOR TO SLAB AT LOCATION SHOWN.

CONTROL PANEL SCHEDULE
(SEE SPECS.)

ITEM No.	DESCRIPTION
1.	NEMA TYPE '4' SINGLE DOOR CONTROL PANEL (AMFCO CAT. NO. 48368 OR EQ.)
2.	METER (8¾"SQ. MODEL 236, ROBERTSHAW)
3.	LIGHT W/NAMEPL.: 'TANK II, HIGH LEVEL' ON 2 LINES, 3/16" LETTERS.
3'	LIGHT W/NAMEPL.: 'TANK I, HIGH LEVEL' ON 2 LINES, 3/16" LETTERS.
4.	PUSH BUTTON W/NAMEPL.: 'OPEN'
5.	PUSH BUTTON W/NAMEPL.: 'STOP'
6.	PUSH BUTTON W/NAMEPL.: 'CLOSE'
7.	RED LIGHT W/NAMEPL.: 'CLOSE'
8.	GREEN LIGHT W/NAMEPL.: 'OPEN'
9.	PUSH BUTTON W/NAMEPL.: 'RUN'
10.	GREEN LIGHT W/NAMEPL.: 'PUMP II, RUN' ON 2 LINES, 3/16" LETTERS.
10'	GREEN LIGHT W/NAMEPL.: 'PUMP I, RUN' ON 2 LINES, 3/16" LETTERS.
11.	NAMEPL.: 'METER'
12.	VALVE SHAPE W/ IDENTITY AS SHOWN.
13.	NAMEPL.: 'TO TANK CAR UNLOADING' ON 2 LINES, 3/16" LETTERS.
14.	NAMEPL.: 'TO RAIL CAR UNLOADING' ON 2 LINES, 3/16" LETTERS.
15.	NAMEPL.: 'T-2, TANK FILL VALVE' ON 2 LINES, 3/16" LETTERS.
15'	NAMEPL.: 'T-1, TANK FILL VALVE' ON 2 LINES, 3/16" LETTERS.
16.	INSTRUCTION PLATE: (AS FOLLOWS): INSTRUCTIONS. 1. TO UNLOAD TANK TRUCK, OPEN VALVE S-2, CLOSE VALVE S-1; REVERSE SEQUENCE TO UNLOAD RAILROAD TANK CAR. 2. TO OPERATE PUMP I, OPEN VALVES S-3 AND D-1, CLOSE VALVES S-4 AND D-2. 3. TO OPERATE PUMP II, OPEN VALVES S-4 AND D-2, CLOSE VALVES S-3 AND D-1. 4. TO PUMP INTO TANK T-1, PRESS 'OPEN' PUSH BUTTON FOR T-1 AND CLOSE PUSH BUTTON FOR T-2. REVERSE SEQUENCE TO PUMP INTO TANK T-2. 5. DO NOT PUMP INTO TANK IF 'HIGH LEVEL' INDICATOR LIGHT IS ON.
17.	SELECTOR SWITCH W/NAMEPL.: 'TANK II I' ON 2 LINES, 3/16" LETTERS.

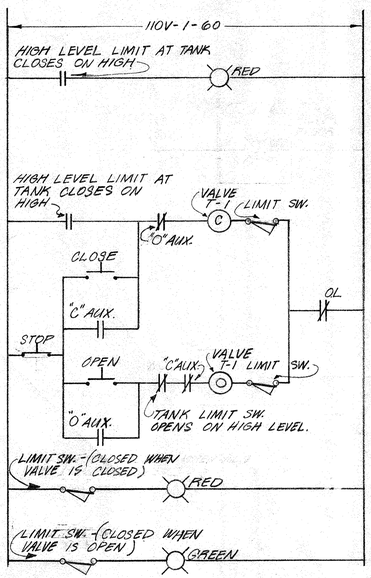

TANK I AT UNLOADING STATION (C) 195

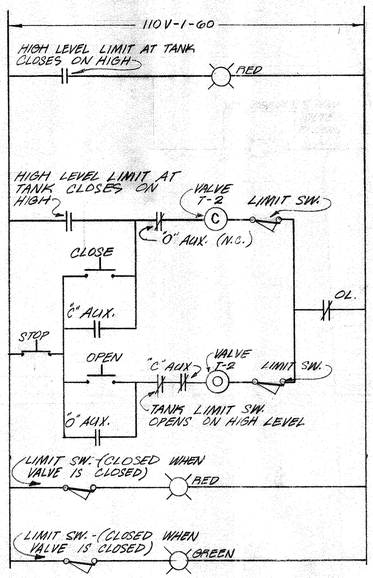

TANK II AT UNLOADING STATION

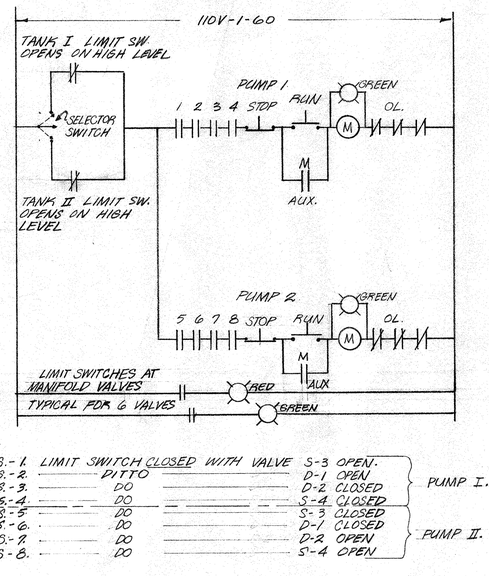

L.S.-1.	LIMIT SWITCH CLOSED WITH VALVE	S-3	OPEN.
L.S.-2.	DITTO	D-1	OPEN
L.S.-3.	DO	D-2	CLOSED
L.S.-4.	DO	S-4	CLOSED
L.S.-5.	DO	S-3	CLOSED
L.S.-6.	DO	D-1	CLOSED
L.S.-7.	DO	D-2	OPEN
L.S.-8.	DO	S-4	OPEN

PUMP I. / PUMP II.

PUMP CONTROL AT UNLOADING STATION (E) 195

CONTROL SCHEMATICS (D) 195
NO SCALE

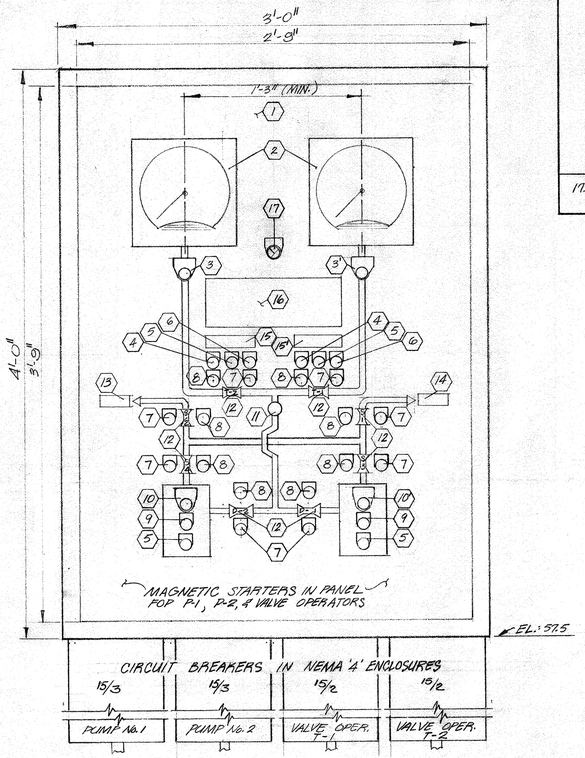

CONTROL PANEL (F) 195
SCALE: 2"=1'-0"

REV NO.	DATE	DESCRIPTION	DESIGN	CHECKED
1	6-78	ADDED TELEPHONE OUTLET AT FUEL OIL CONTROL PANEL	D. P.	L. M. B.

STATE OF TEXAS — W. O. RAY — 4632 — REGISTERED PROFESSIONAL ENGINEER

STATE OF TEXAS — PAUL R. HOLMES — 27638 — REGISTERED PROFESSIONAL ENGINEER

CITY OF HOUSTON
DEPARTMENT OF PUBLIC WORKS

ALMEDA SIMS SLUDGE DISPOSAL PLANT - 1973

FUEL OIL UNLOADING STATION

CONTROL SCHEMATIC AND ELECTRICAL DETAILS

RECOMMENDED FOR APPROVAL:
Paul R. Holmes
BINKLEY & HOLMES, INC., CONSULTING ENGINEERS

APPROVED:
CHIEF ENGINEER — ASST. CHIEF ENGINEER
ASST. DIRECTORS OF PUBLIC WORKS
DIRECTOR OF PUBLIC WORKS

DESIGNED BY: B. W.
DRAWN BY: G. A. S.
CHECKED BY: W. O. R.
SCALE: AS SHOWN
DATE: SEPT. 1975
SHEET 195 OF 200 SHEETS
DRAWING NO. 18045

MICROFILMED APR 10 1978

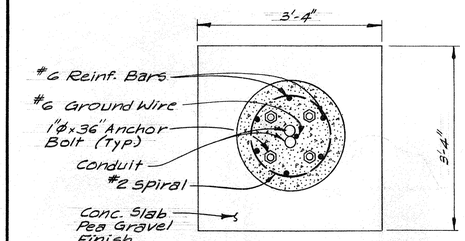

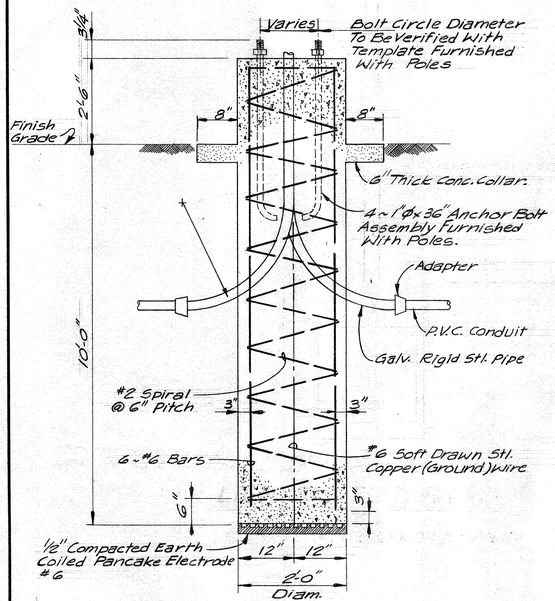

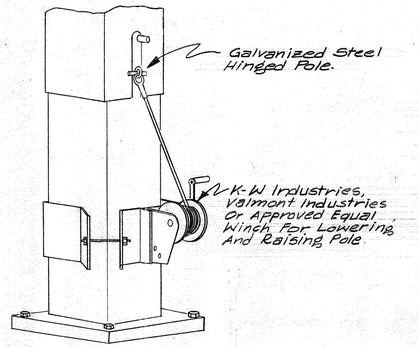

Note: Winch shall be of same manufacturer as pole supplier.

⚠ FLOODLIGHT POLE WINCH DETAIL (B 196)

N.T.S.

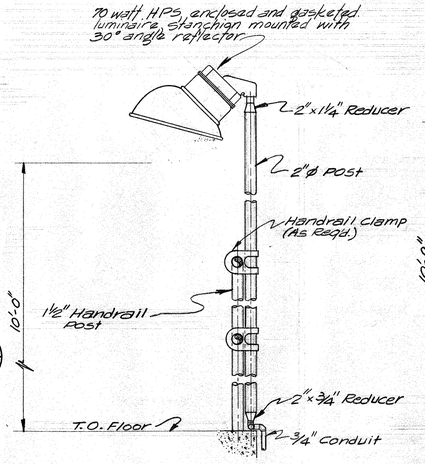

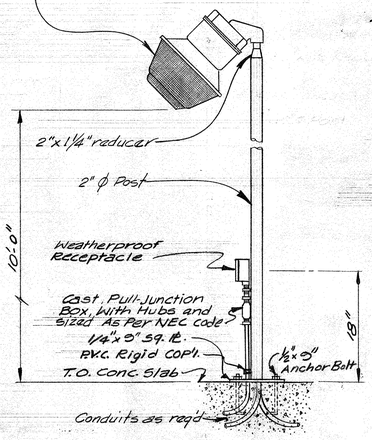

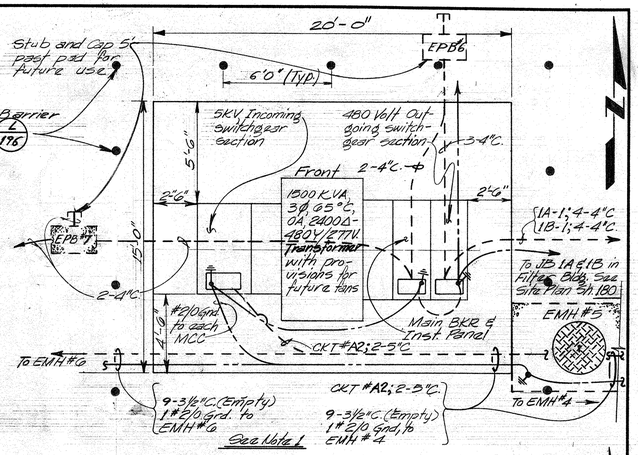

⚠ PLAN-1500 KVA POWER CENTER No. 1 (F 196)

SCALE: 1/4"= 1'-0"

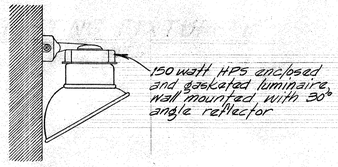

⚠ LIGHTING FIXTURE "F" (D 196)

N.T.S.

⚠ LIGHTING FIXTURE "P" (E 196)

NTS

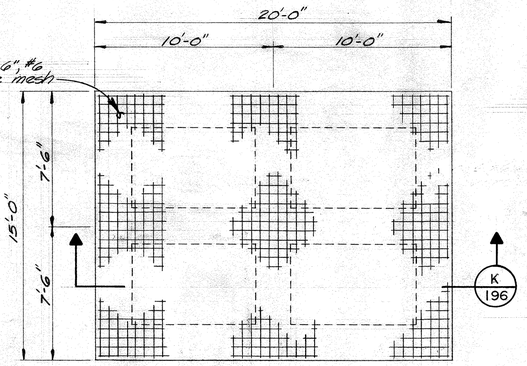

⚠ LIGHTING FIXTURE "W" (C 196)

N.T.S.

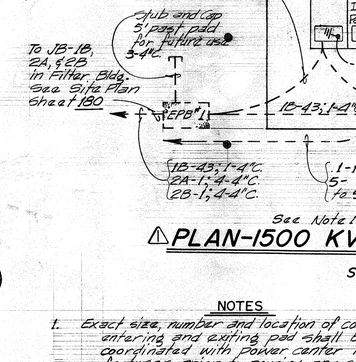

See Note 1

⚠ PLAN-1500 KVA POWER CENTER No. 2 (G 196)

SCALE: 1/4"= 1'-0"

⚠ FLOODLIGHT POLE FOUNDATION (A 196)

N.T.S.

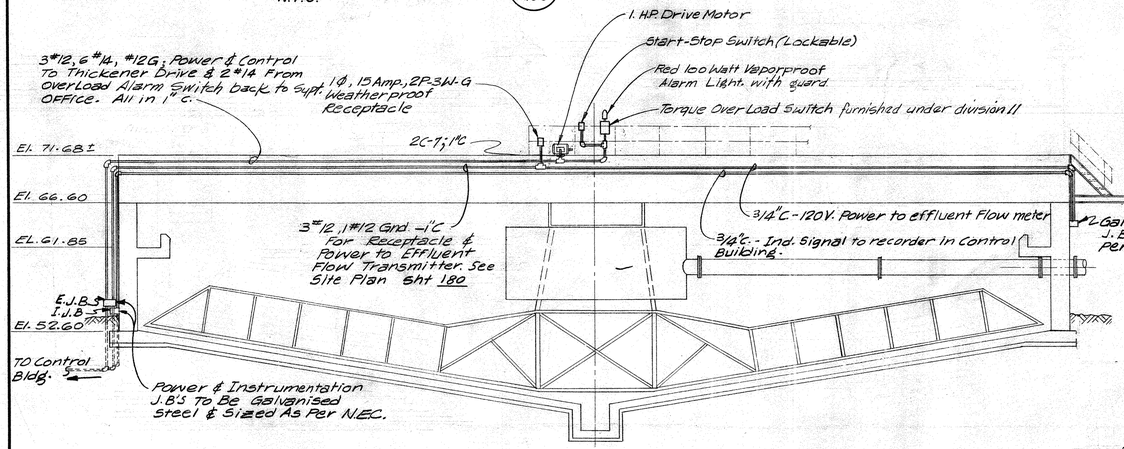

⚠ THICKENER TANK SECTION (H 196)

SCALE: 1/8"= 1'-0"

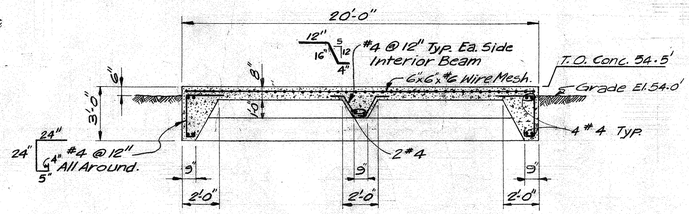

⚠ FOUNDATION PLAN (J 196)

SCALE: 1/4"= 1'-0"
See Notes, 1, 2, 3 & 4

⚠ SECTION (K 196)

SCALE: 1/4"= 1'-0"

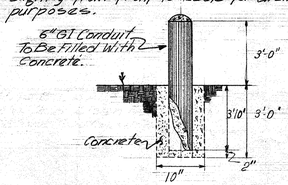

⚠ PROTECTIVE BARRIER (L 196)

N.T.S.

NOTES

1. Exact size, number and location of conduits entering and exiting pad shall be coordinated with power center manufacturer prior to pouring any concrete.
2. During installation, conduits shall be stubbed 4" above pad and capped for future use.
3. Strip back all vegetation and place a minimum of 8" clean bank sand before pouring slab.
4. Pad shall be 6" above grade and sloped slightly from front to back for drainage purposes.

REV.	DATE	DESCRIPTION	DES	CK'D
2	6-77	Added Protective Barrier Around Power Center 1 & 2.	L.M.B.	L.M.B
1	3-77	Replaced 3-1ø Transformer substation with 1500 KVA Power Centers #1 & 2. Replaced obsolete lighting fixtures as shown. Also added floodlight pole details, Rerouted distribution circuits on Thickener tank	L.M.B	L.M.B

CITY OF HOUSTON
DEPARTMENT OF PUBLIC WORKS

ALMEDA SIMS SLUDGE DISPOSAL PLANT - 1973

POWER CENTERS №1, №2 AND MISCELLANEOUS ELECTRICAL DETAILS

RECOMMENDED FOR APPROVAL:
W. O. Ray
BINKLEY & HOLMES, INC., CONSULTING ENGINEERS

APPROVED:
Walter Williams
CHIEF ENGINEER — ASST. CHIEF ENGINEER
ASST. DIRECTORS OF PUBLIC WORKS
DIRECTOR OF PUBLIC WORKS

DESIGNED BY: W.O.R
DRAWN BY: A.P
CHECKED BY: W.O.R
SCALE: AS NOTED
DATE: DEC 1973
SHEET: 196 OF 200 SHEETS
DRAWING NO. 18045

STATE OF TEXAS W. O. RAY 4632 REGISTERED PROFESSIONAL ENGINEER

STATE OF TEXAS PAUL R. HOLMES 27638 REGISTERED PROFESSIONAL ENGINEER

NOTE

DRYER ROOM EQUIPMENT DRAWINGS SHEETS 007 THRU 009, SHOW THE RELATIVE ARRANGEMENT OF DRYER EQUIPMENT TO BE FURNISHED AND ERRECTED UNDER ANOTHER CONTRACT AND EQUIPMENT AND STRUCTURE TO BE CONSTRUCTED UNDER THIS CONTRACT. SEE SPECIFICATIONS AND CONTRACT DRAWINGS FOR DELINEATION OF WORK.

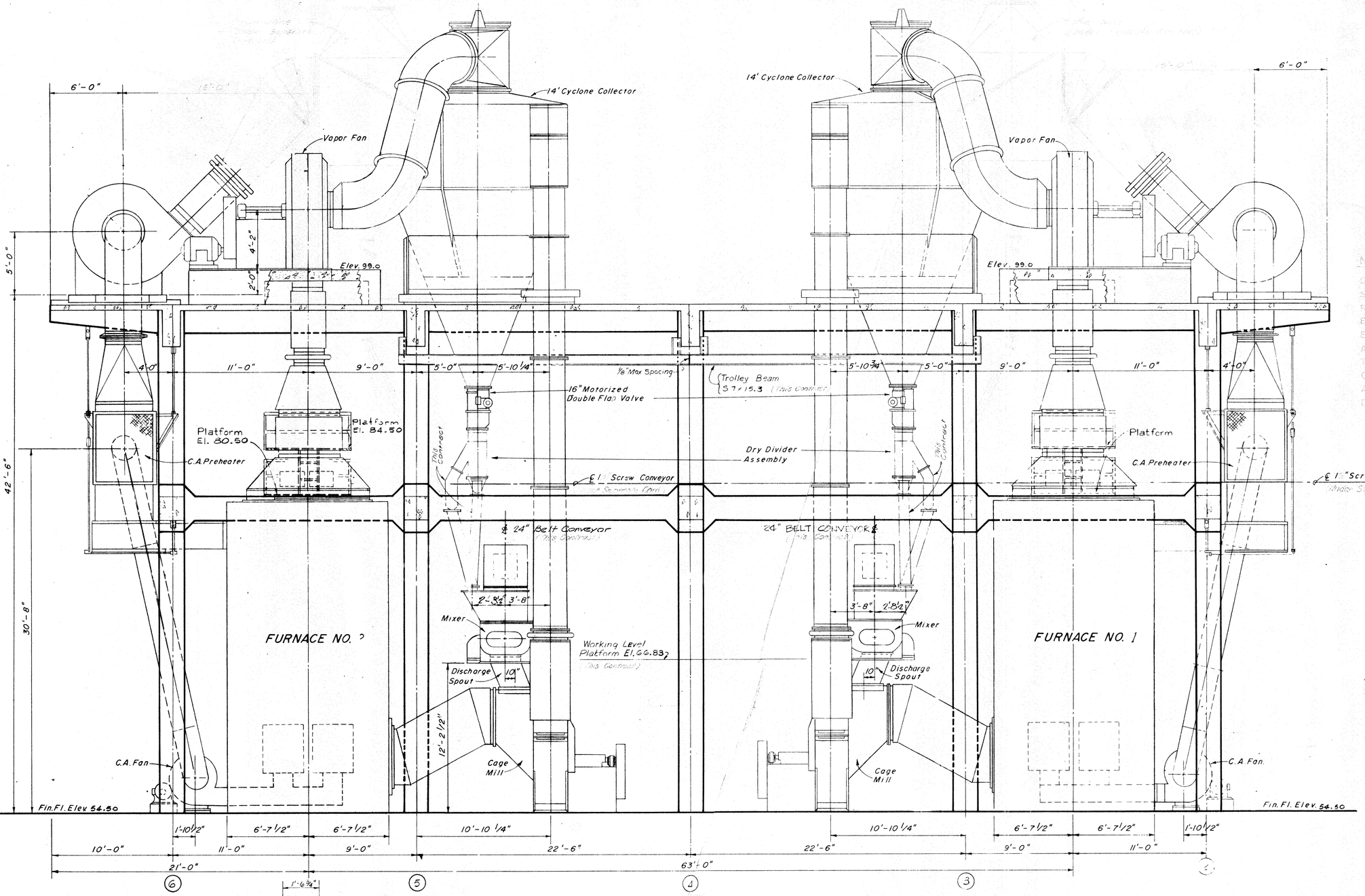

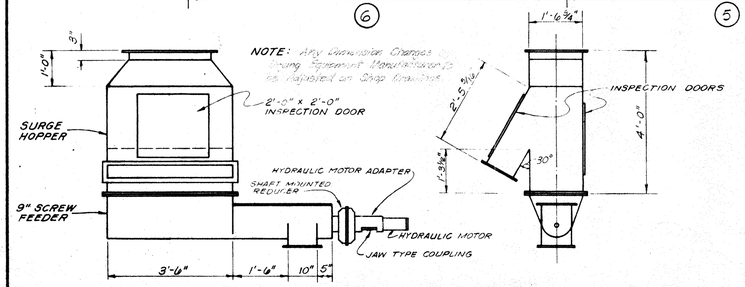

DRY DIVIDER ASSEMBLY
N. T. S.

TYPICAL SECTION THRU SLUDGE DRYING EQUIPMENT

JOB NO. 3304 DS

CITY OF HOUSTON
DEPARTMENT OF PUBLIC WORKS

ALMEDA SIMS
SLUDGE DISPOSAL
PLANT - 1973

SLUDGE DRYING EQUIPMENT
TYPICAL SECTION

RECOMMENDED FOR APPROVAL:

BINKLEY & HOLMES, INC., CONSULTING ENGINEERS

APPROVED:

CHIEF ENGINEER — ASST. CHIEF ENGINEER

ASST. DIRECTORS OF PUBLIC WORKS

DIRECTOR OF PUBLIC WORKS

DESIGNED BY: J.J.
DRAWN BY: I. Gonzalez
CHECKED BY: A.C.B.
SCALE: 1/4" = 1'-0"
DATE: Dec. 1975
SHEET 7 OF ' SHEETS
DRAWING NO. 18045

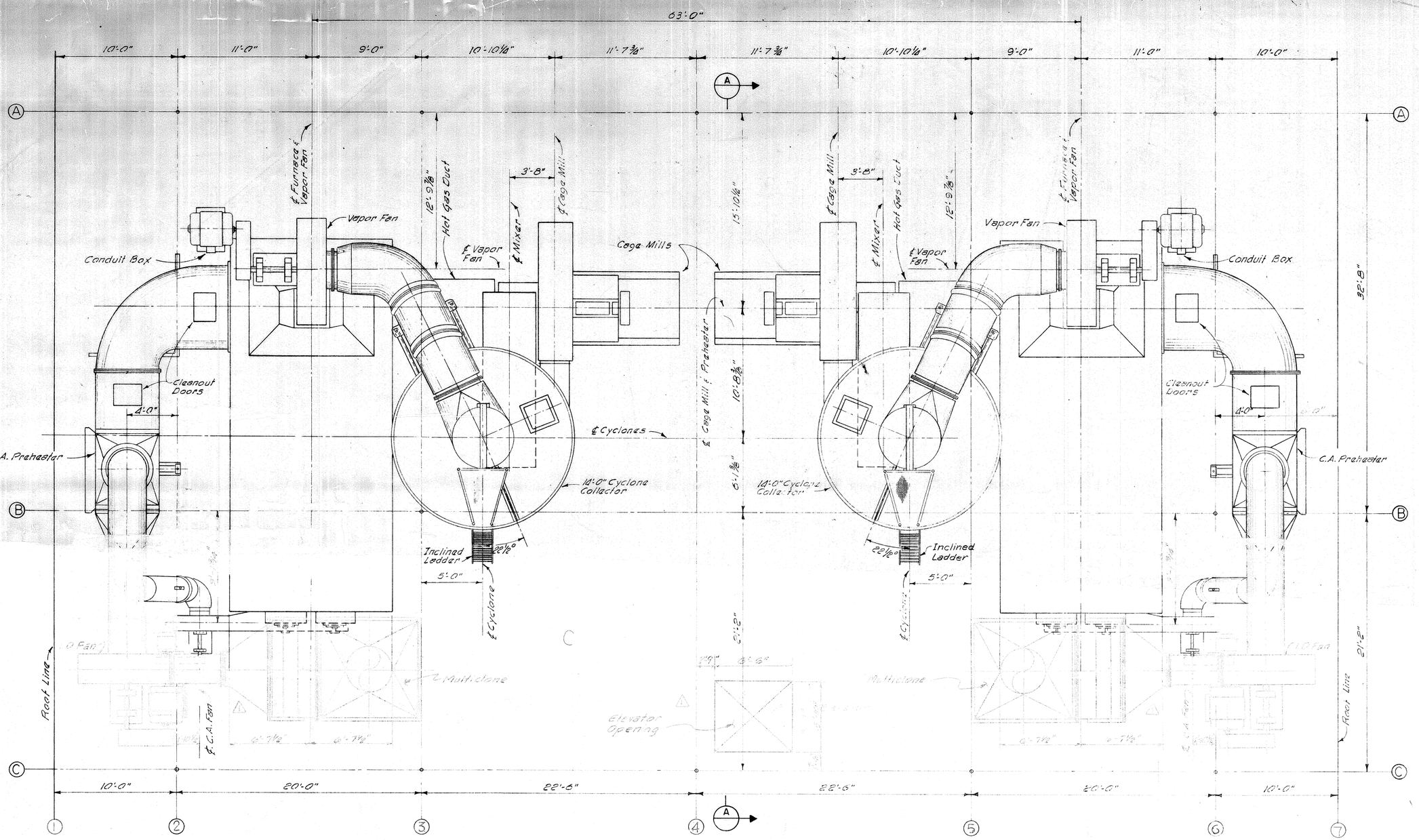

NOTES:

1. All Dimensions Shown Related To Mechanical Equipment Are To Be Verified With Equipment Mfr's Specifications.

DRYER ROOM - EQUIPMENT PLAN

~EQUIPMENT BY OTHERS~

NO.	DATE	DESCRIPTION	BY	CHK'D
1	3-79	ADD MULTICLONE & ELEVATOR	L.S.S.	S.R.S.

CITY OF HOUSTON
DEPARTMENT OF PUBLIC WORKS

ALMEDA SIMS
SLUDGE DISPOSAL
PLANT — 1973

SLUDGE DRYING EQUIPMENT
PLAN

RECOMMENDED FOR APPROVAL:
BINKLEY & HOLMES, INC., CONSULTING ENGINEERS

APPROVED:
CHIEF ENGINEER — ASST. CHIEF ENGINEER
ASST. DIRECTORS OF PUBLIC WORKS
DIRECTOR OF PUBLIC WORKS

DESIGNED BY:
DRAWN BY: T. Yrigoyen
CHECKED BY:
SCALE: 1/8"=1'-0"
DATE: Dec., 1979
SHEET 13 OF 22 SHEETS
DRAWING NO. 18045

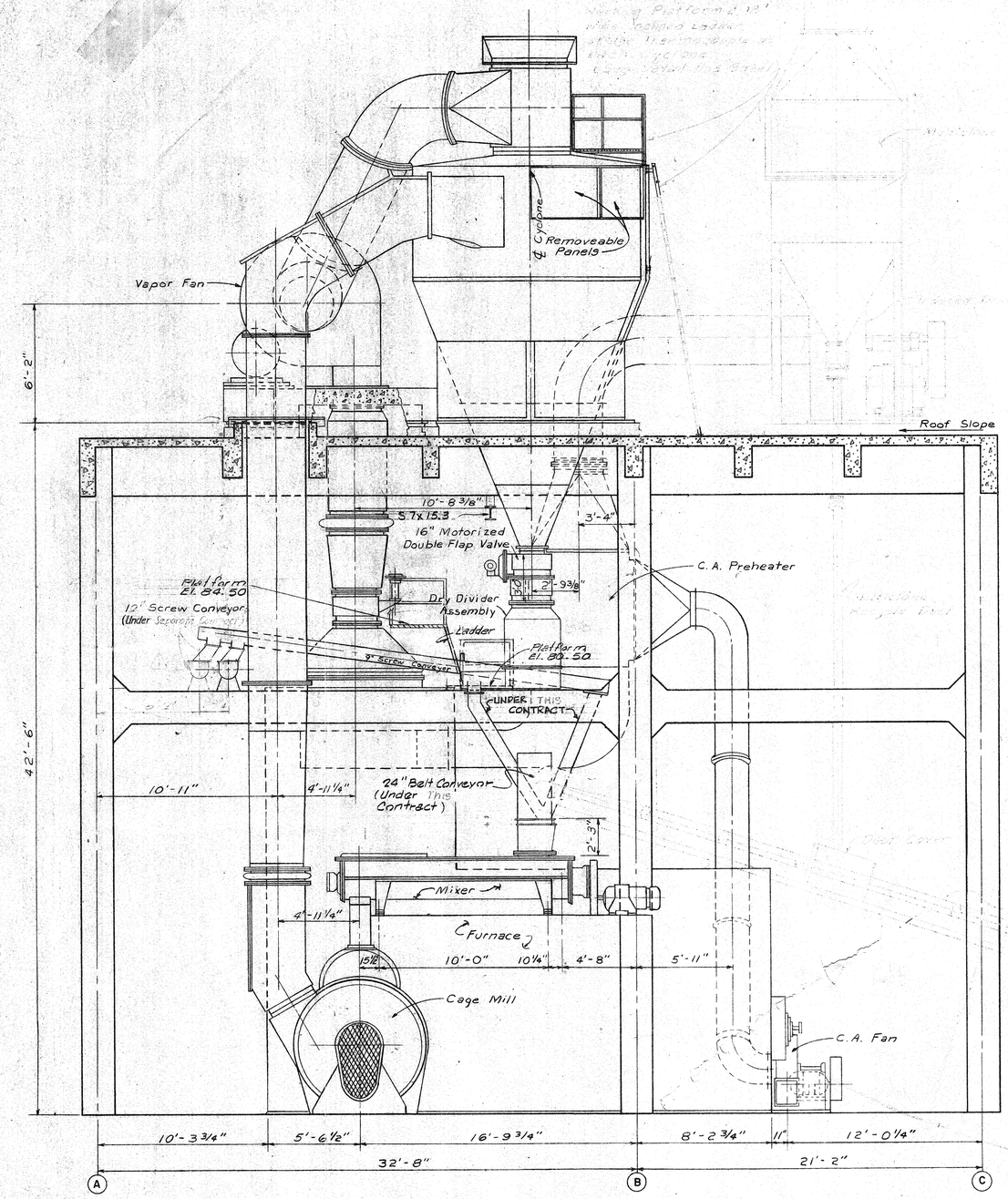

END ELEVATION

SECTION (A/6)

SCALE: 1/4" = 1'-0"

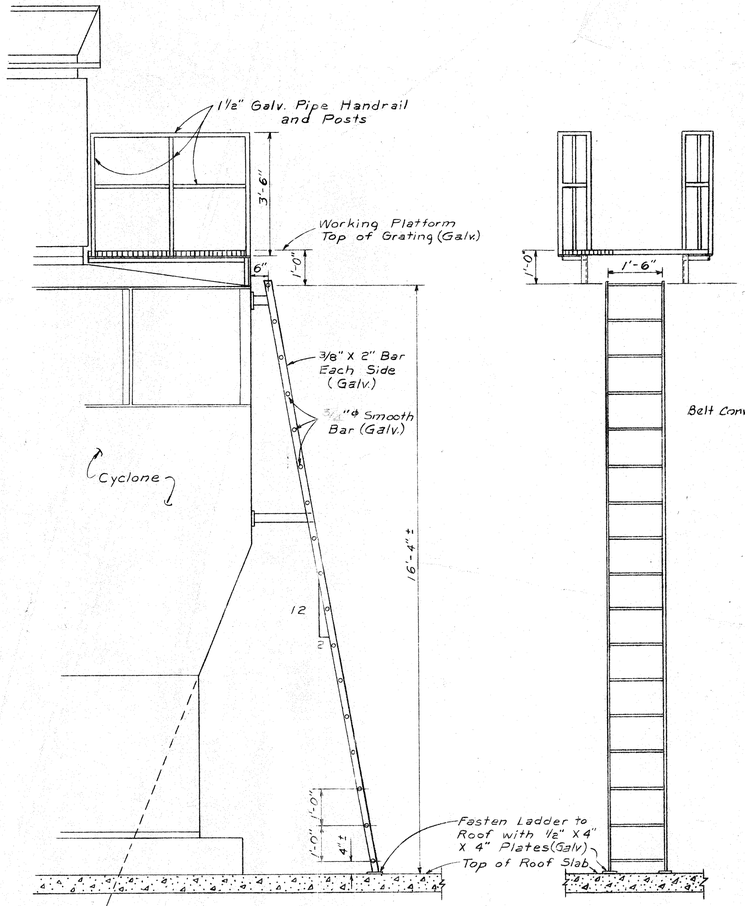

SIDE ELEVATION

FRONT ELEVATION

DETAILS - INCLINED LADDER & WORKING PLATFORM AT THERMOCOUPLE AT CYCLONE

SCALE: 1/2" = 1'-0"

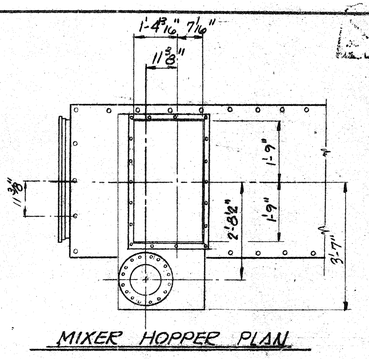

MIXER HOPPER PLAN

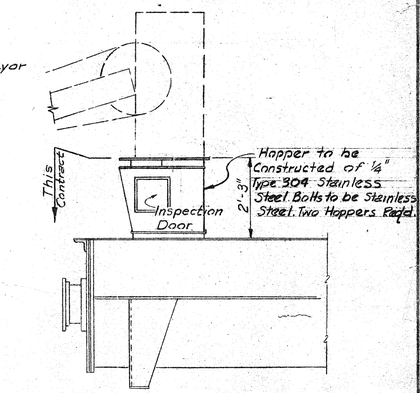

MIXER HOPPER DETAIL

Scale: ½" = 1'-0"

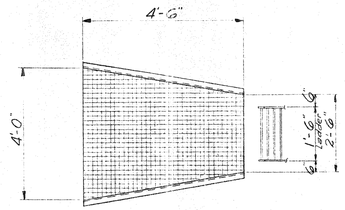

PLAN

WORKING PLATFORM

Scale: ½" = 1'-0"

REV. No	DATE	DESCRIPTION	BY	CHECKED
	11-75			

JOB NO. 3304 DS

CITY OF HOUSTON
DEPARTMENT OF PUBLIC WORKS

ALMEDA SIMS
SLUDGE DISPOSAL
PLANT - 1973

SLUDGE DRYING EQUIPMENT

ELEVATIONS & DETAILS

RECOMMENDED FOR APPROVAL:

BINKLEY & HOLMES, INC., CONSULTING ENGINEERS

APPROVED:

CHIEF ENGINEER — ASST. CHIEF ENGINEER

ASST. DIRECTORS OF PUBLIC WORKS

DIRECTOR OF PUBLIC WORKS

DESIGNED BY: J.J.
DRAWN BY: G. Dorman
CHECKED BY: A.C.B.
SCALE: AS NOTED
DATE: Dec. 1975
SHEET 9 OF 9 SHEETS
DRAWING NO. 18045

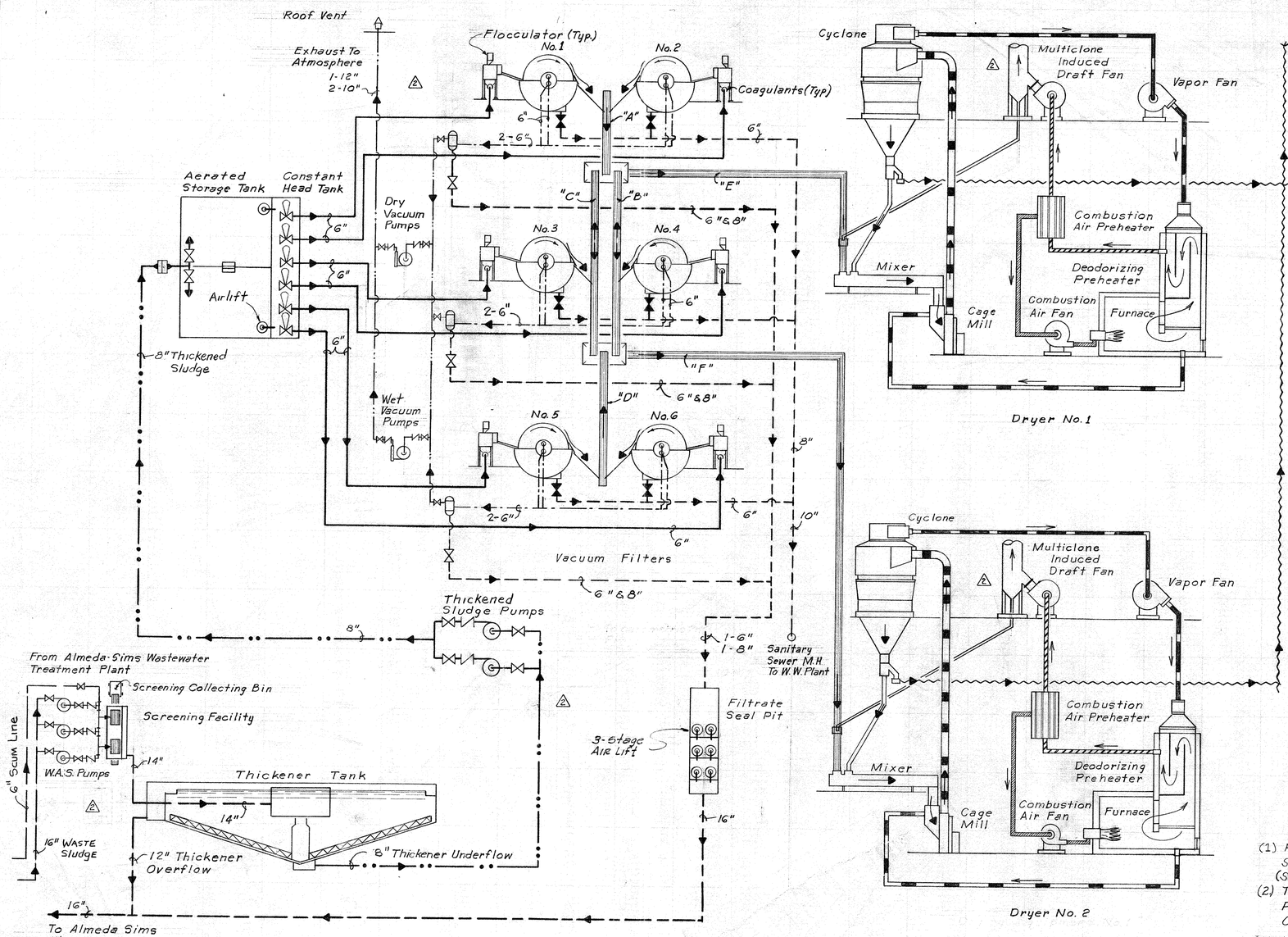

LEGEND

- Excess Sludge
- Thickened Sludge
- Sludge Feed
- Filtrate Drains
- Return Flow
- Belt Conveyor (Filter Cake)
- Screw Conveyor (Dry Product)
- Drying Tower
- Foul Vapor
- Deodorized Vapor
- Hot Gas
- Combustion Air
- Vacuum Filtrate
- "A" Conveyor Identification
- Direction Of Product Flow
- Direction Of Vapor/Gas Flow
- Telescoping Valve
- Valve (Normally Open)
- Valve (Normally Closed)
- Check Valve
- Sludge Density Meter
- Stop Log Gate (Normally Open)
- Air Lift
- Vacuum Filtrate Receiver

Notes

(1) For More Detailed Schematic Of Filter Room Piping & Equipment (See SHT. 167)

(2) This Schematic Includes Process Flow Of Contracts "C-1", "C-2" & "E-1"

(3) For Detailed Schematics Of Plant Water and Chemical Storage Feed Systems (See Sht. No. 167)

REV. NO.	DATE	DESCRIPTION	DESIGN	CHECKED
2	March '77	Add Screening Facility & Pumps Rev. To Accomidate Changes in Plans	J.C.S	S.R.S
1	April 1976	Added This Sht. To Dwg's	D.R.Y.	D.R.Y.

CITY OF HOUSTON
DEPARTMENT OF PUBLIC WORKS

ALMEDA SIMS SLUDGE DISPOSAL PLANT - 1973

PROCESS FLOW SCHEMATIC

RECOMMENDED FOR APPROVAL:
BINKLEY & HOLMES, INC., CONSULTING ENGINEERS

APPROVED:
CHIEF ENGINEER — ASST. CHIEF ENGINEER
ASST. DIRECTORS OF PUBLIC WORKS
DIRECTOR OF PUBLIC WORKS

DESIGNED BY: D.R.Y.
DRAWN BY: E. Thomas
CHECKED BY: A.C.B.
SCALE: None
DATE: April 1976
SHEET 200 OF 200 SHEETS
DRAWING NO. 18045

CITY OF HOUSTON
DEPARTMENT OF PUBLIC WORKS
JIMMIE SCHINDERWOLF, DIRECTOR

ALMEDA-SIMS SLUDGE DISPOSAL PLANT

PNEUMATIC CONVEYING, STORAGE AND LOADING FACILITIES

1980

CONTRACT NO. C-2

WASTEWATER DIVISION JOB NO. 3304-DS-2

EPA PROJECT C-48-1074-02

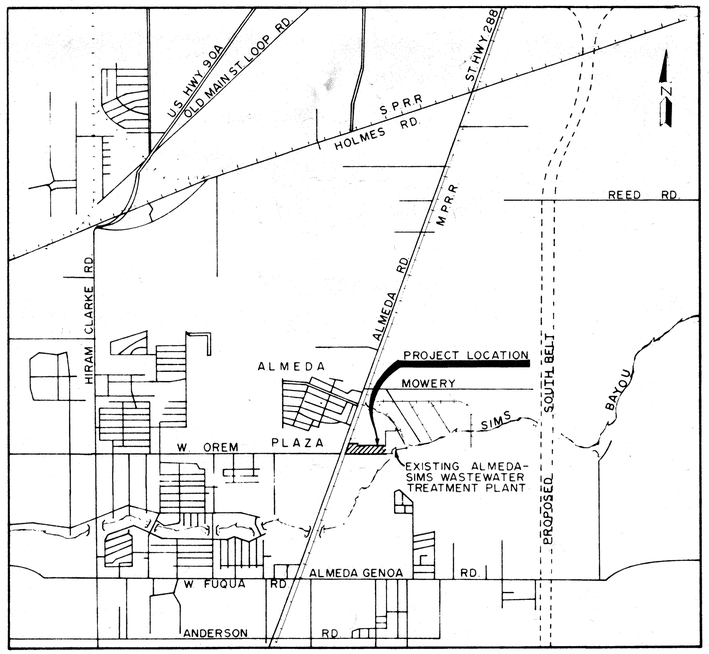

LOCATION PLAN
SCALE 1" = 3000'

INDEX TO DRAWINGS

DESCRIPTION	SHEET NO.
TITLE	1
SITE PLAN	2
GENERAL LAYOUT	3
SITE WORK	4
CONVEYING SYSTEM SCHEMATIC	5
DRYER ROOM, PLAN @ EL. 80.50	6
DRYER ROOM, PLAN @ EL. 66.83	7
DRYER ROOM, SECTIONS AND DETAILS	8
DRYER ROOM, SECTION AND DETAILS	9
LOADING FACILITIES, ELEVATIONS	10
LOADING FACILITIES, GROUND FLOOR PLAN	11
LOADING FACILITIES, CONTROL LEVEL FLOOR PLAN	12
LOADING FACILITIES, ROOF FRAMING PLAN	13
LOADING FACILITIES, SECTION AND DETAILS	14
LOADING FACILITIES, SECTION	15
LOADING FACILITIES, SECTIONS AND DETAILS	16
LOADING FACILITIES, ROOF PLAN, RESTROOM FLOOR PLAN & SECTIONS	17
LOADING FACILITIES, FOOTING, COLUMN, & BEAM DETAILS & SCHEDULES	18
LOADING FACILITIES, WALKWAY & STAIR DETAILS	19
LOADING FACILITIES, PLATFORMS & MISCELLANEOUS DETAILS	20
STORAGE FACILITIES, EAST ELEVATION	21
STORAGE FACILITIES, NORTH ELEVATION, PENTHOUSE PLAN & ELEVATIONS	22
STORAGE FACILITIES, FOUNDATION PLAN	23
STORAGE FACILITIES, GROUND FLOOR PLAN	24
STORAGE FACILITIES, ROOF PLAN	25
STORAGE FACILITIES, SECTION	26
STORAGE FACILITIES, MISCELLANEOUS PIPING & STRUCTURAL DETAILS	27
STORAGE FACILITIES, MISCELLANEOUS PIPING & STRUCTURAL DETAILS	28
STORAGE FACILITIES, LADDER & PLATFORM DETAILS	29
ARCHITECTURAL, ROOF AND WALL DETAILS	30
ARCHITECTURAL, COLUMN AND WALL DETAILS	31
ARCHITECTURAL, DOOR SCHEDULE AND DETAILS	32
ARCHITECTURAL, LOUVER, WINDOW AND VENTILATION FAN DETAILS	33
ARCHITECTURAL, MISCELLANEOUS DETAILS	34
CONCRETE STANDARD DETAILS	35
PLUMBING & HVAC ISOMETRIC	36
ELECTRICAL LEGEND AND SCHEDULES	37
ELECTRICAL SITE PLAN	38
POWER DISTRIBUTION KEY PLAN	39
ELECTRICAL ONE LINE DIAGRAM	40
ELECTRICAL CONTROL SCHEMATICS	41
PNEUMATIC CONVEYING SYSTEM, INSTRUMENTATION SCHEMATIC	42
PNEUMATIC CONVEYING SYSTEM, MISCELLANEOUS INSTRUMENTATION DETAILS	43
DRYER BUILDING FACILITIES, ELECTRICAL PLAN & SECTION	44
LOADING FACILITIES, GROUND FLOOR ELECTRICAL PLANS	45
LOADING FACILITIES, CONTROL ROOM & ROOF ELEC. PLANS	46
LOADING FACILITIES, ELECTRICAL SECTIONS & DETAILS	47
STORAGE FACILITIES, GROUND FLOOR ELECTRICAL PLAN	48
STORAGE FACILITIES, ROOF ELECTRICAL PLAN	49
STORAGE FACILITIES, ELECTRICAL SECTIONS & DETAILS	50
MISCELLANEOUS ELECTRICAL DETAILS	51

BINKLEY & HOLMES, INC.
Consulting Engineers
Houston, Texas

RECORDS
FILM
DATE 7-21-83

DWG. NO. 26709

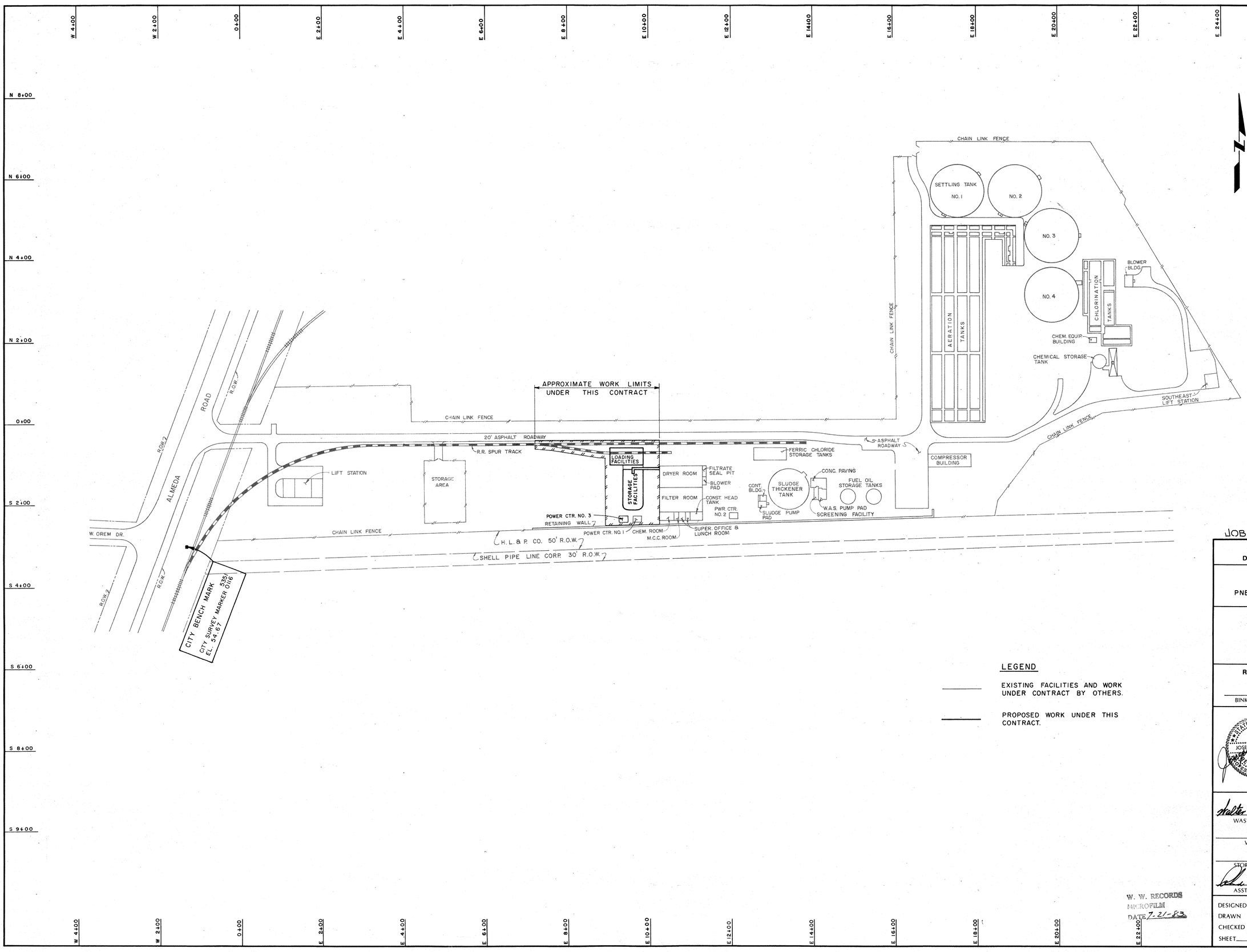

LEGEND

EXISTING FACILITIES AND WORK UNDER CONTRACT BY OTHERS.

PROPOSED WORK UNDER THIS CONTRACT.

W. W. RECORDS MICROFILM DATE 7-21-83

JOB NO. 3304-DS-2

CITY OF HOUSTON
DEPARTMENT OF PUBLIC WORKS

ALMEDA SIMS
SLUDGE DISPOSAL PLANT
PNEUMATIC CONVEYING, STORAGE AND LOADING FACILITIES

SITE PLAN

RECOMMENDED FOR APPROVAL:
Kenneth R. Lindsey
BINKLEY & HOLMES, INC. CONSULTING ENGINEERS

STATE OF TEXAS — JOSEPH A. LANDA — 42921 — REGISTERED PROFESSIONAL ENGINEER

STATE OF TEXAS — KENNETH R. LINDSEY — 31158 — REGISTERED PROFESSIONAL ENGINEER

APPROVED:

Walter Williams — WASTEWATER	PAVING
WATER	Jerry Jenkins 10-2-80 — CONSTRUCTION
STORM SEWER — ASST. DIRECTOR	Jimmie Schindler — DIRECTOR

DESIGNED BY: J.A.J. SCALE: 1" = 100'
DRAWN BY: J.S.F. DATE: APRIL 1980
CHECKED BY: K.R.L. DRAWING NO. 26709
SHEET ____ SHEET NO. 2 OF 51

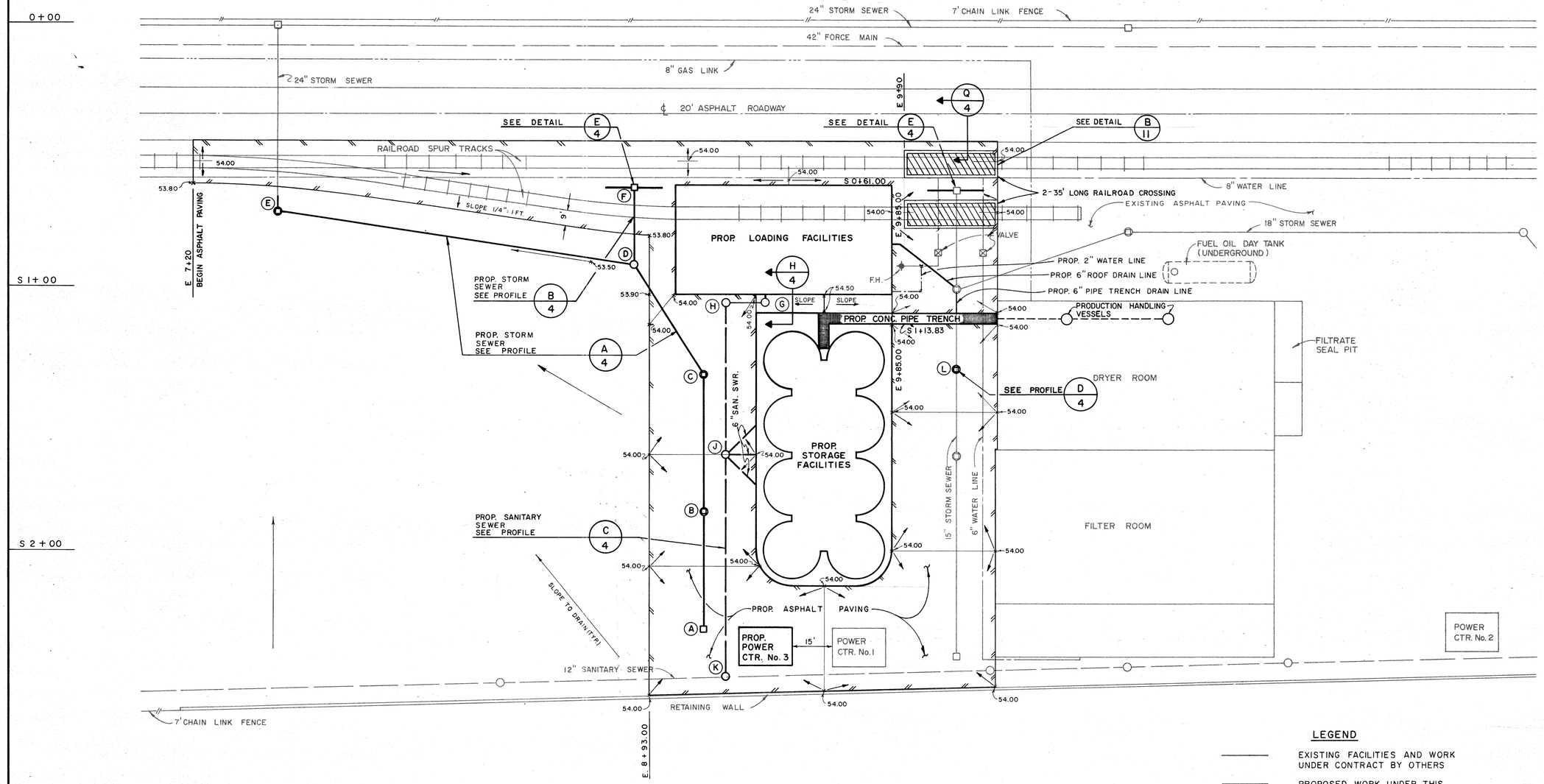

CITY OF HOUSTON

BENCH MARK 5351/0116

ELEVATION: 54.67

Monument located approximately 80' of East Southeast of Intersection of Almeda Road and W. Owem Drive.

N

NOTE:

1. CONTRACTOR SHALL MATCH PROPOSED ASPHALT PAVING WITH EXISTING ASPHALT PAVING.
2. CONTRACT C-1 ALMEDA SIMS SLUDGE DISPOSAL PLANT SPECIFIES AN ELEVATION OF 54.00 FOR THE FINISH GRADE OF AREA WITHIN THE LIMITS OF THIS CONTRACT.

LEGEND

- EXISTING FACILITIES AND WORK UNDER CONTRACT BY OTHERS
- PROPOSED WORK UNDER THIS CONTRACT
- PROPOSED ASPHALT PAVING LIMITS

MANHOLE AND INLET SCHEDULE

INLET	M.H.	TYPE	COORDINATES	TOP OF GRATE / COVER	FLOW LINE
A		B	S 2+30.00 E 9+14.00	53.00	47.25
	B	C	S 1+85.50 E 9+14.00	53.00	46.84
	C	C	S 1+33.00 E 9+14.00	53.00	46.68
	D	C	S 0+92.00 E 8+88.00	53.50	46.53
	E	C	S 0+72.00 E 7+52.08	53.00 *	39.75±
F		B	S 0+62.00 E 8+88.00	53.50	48.25
	J	I	S 1+63.50 E 9+22.00	54.00±	45.61
	K	I	S 2+49.00 E 9+22.00	54.00±	42.81
	L	C	S 1+31.00 E 10+10.00	53.50	43.50
	G	I	S 1+08.00 E 9+50.00	54.00±	50.62
	H	I	S 1+08.00 E 9+22.00	54.00±	50.34

* FIELD CONDITIONS MAY WARRANT ELEVATION ADJUSTMENT TO GRATE TOP

W. W. RECORDS
MICROFILM
DATE 7-21-83

JOB NO. 3304-DS-2

CITY OF HOUSTON
DEPARTMENT OF PUBLIC WORKS

ALMEDA SIMS
SLUDGE DISPOSAL PLANT
PNEUMATIC CONVEYING, STORAGE AND LOADING FACILITIES

GENERAL LAYOUT

RECOMMENDED FOR APPROVAL:
Kenneth R. Lindsey
BINKLEY & HOLMES, INC. CONSULTING ENGINEERS

STATE OF TEXAS — JOSEPH A. JANDA — 42921 — REGISTERED PROFESSIONAL ENGINEER

STATE OF TEXAS — KENNETH R. LINDSEY — 31158 — REGISTERED PROFESSIONAL ENGINEER

APPROVED:

WASTEWATER — Walter Williams

PAVING — Jerry Dinkins, CONSTRUCTION

WATER

STORM SEWER — 7/11/80

ASST. DIRECTOR

DIRECTOR — Jimmie Schindler

DESIGNED BY: J.A.J. SCALE: 1" = 20'
DRAWN BY: J.S.F. DATE: APRIL 1980
CHECKED BY: K.R.L. DRAWING NO. 26709
SHEET SHEET NO. 3 OF 51

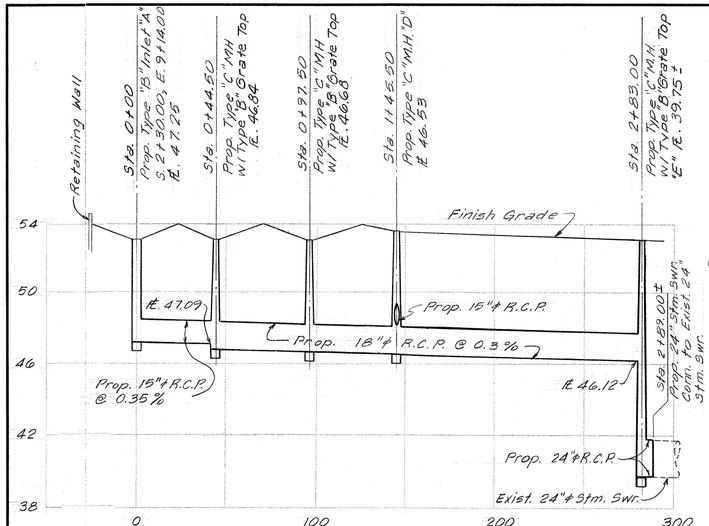

STORM SEWER PROFILE (A 4)
SCALE: 1" = 4'-0" VERT.
1" = 40'-0" HORIZ.

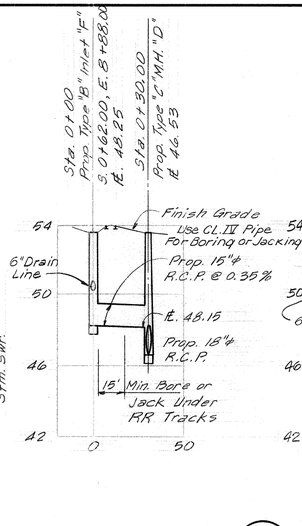

STORM SEWER PROFILE (B 4)
SCALE: 1"= 4'-0" VERT.
1"= 40'-0" HORIZ.

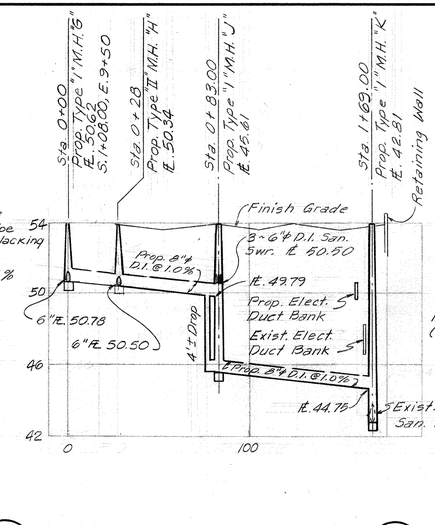

SANITARY SEWER PROFILE (C 4)
SCALE: 1"= 4'-0" VERT.
1" = 40'-0" HORIZ.

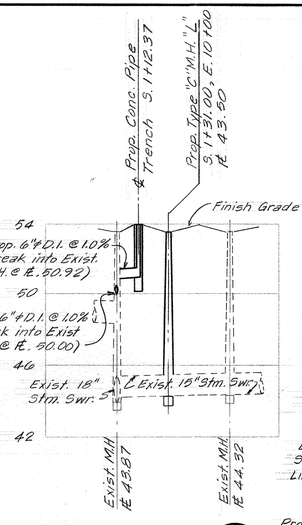

PROFILE (D 4)
SCALE: 1"= 4'-0" VERT.
1"=40'-0" HORIZ.

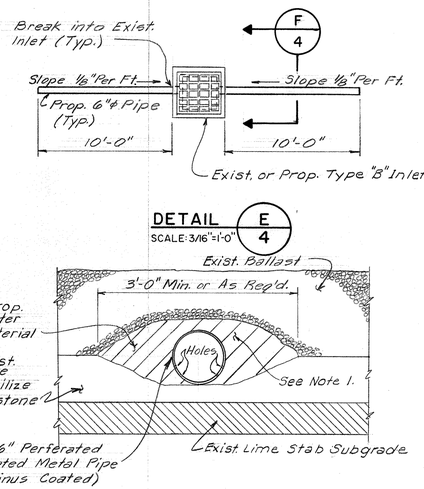

NOTES:

1. Remove Exist. Ballast And Limestone Base As Required. Install Drain Pipe With Filter Type Material As Shown.
2. RailRoad Crossing East & West Curbs To Be 12" Wide.

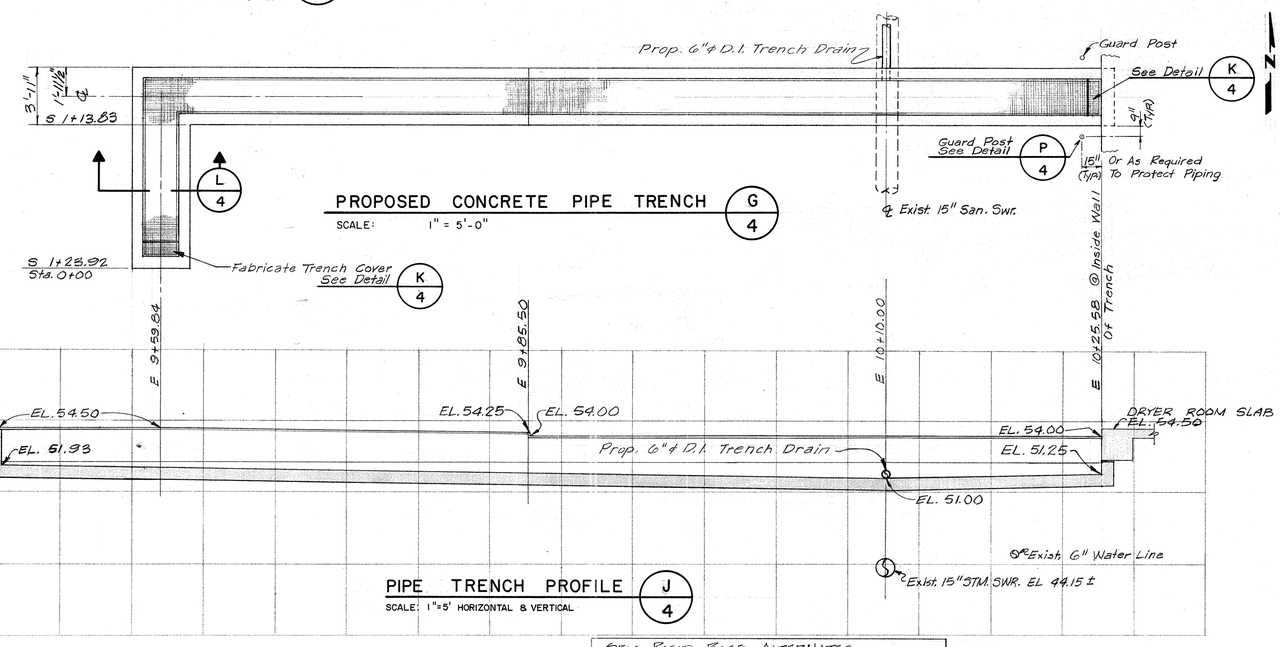

PIPE TRENCH PROFILE (J 4)
SCALE: 1"=5' HORIZONTAL & VERTICAL

SEMI-RIGID BASE ALTERNATES
9" Cem. Stab. Shell Base Course Or
9" Lime Stab. Crushed Limestone Base Course Or
9" Hot Mix Asphaltic Concrete Base Course Or
9" Lime Stab. Pit-Run Gravel Base Course

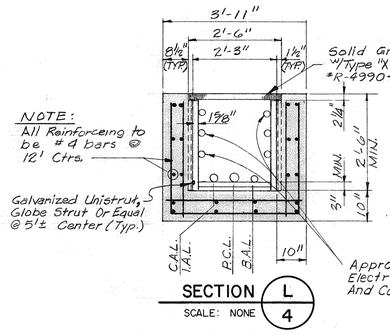

SECTION (L 4)
SCALE: NONE

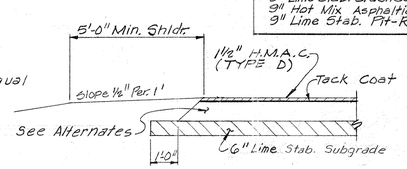

TYPICAL PAVING SECTION (M 4)
SCALE: 3/8" = 1'-0"

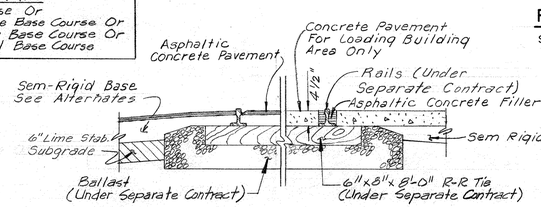

TYPICAL RAILROAD PAVING SECTION (N 4)
SCALE: NONE

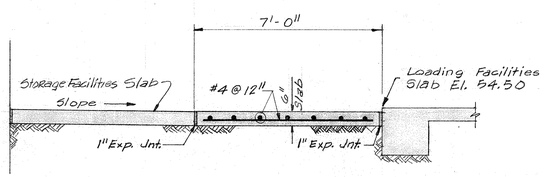

CONCRETE PAVING SECTION (H 4)
SCALE: 3/8" = 1'-0'

SECTION (F 4)
SCALE: NONE

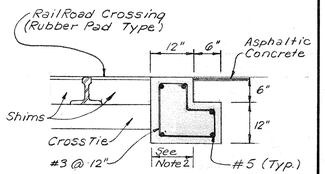

SECTION (Q 4)
SCALE: NONE

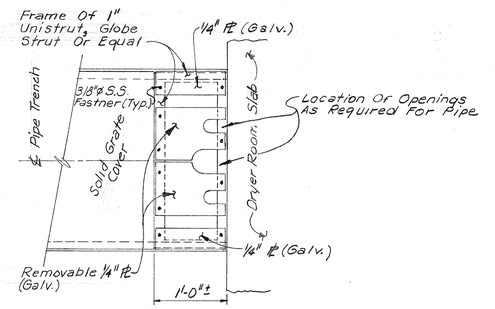

FABRICATED TRENCH COVER DETAIL (K 4)
SCALE: NONE

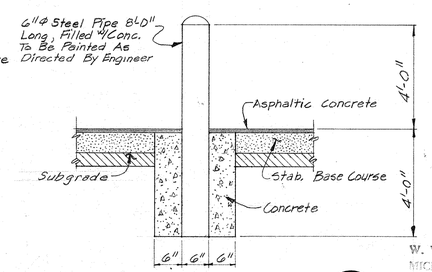

GAURD POST DETAIL (P 4)
SCALE: NONE

W. W. RECORDS MICROFILM DATE 7-21-83

JOB No. 3304-DS-2

CITY OF HOUSTON
DEPARTMENT OF PUBLIC WORKS

ALMEDA SIMS
SLUDGE DISPOSAL PLANT
PNEUMATIC CONVEYING, STORAGE AND LOADING FACILITIES

SITE WORK

RECOMMENDED FOR APPROVAL:
Kenneth R. Binkley
BINKLEY & HOLMES, INC. CONSULTING ENGINEERS

STATE OF TEXAS — JOHN R. MIRANDA — 42911 — REGISTERED PROFESSIONAL ENGINEER

STATE OF TEXAS — KENNETH R. LINDSEY — 31138 — REGISTERED PROFESSIONAL ENGINEER

APPROVED:

WASTEWATER: Walter Williams	PAVING: Jerry A. Jenkins
WATER: 7/11/80	CONSTRUCTION
STORM SEWER	
ASST. DIRECTOR	DIRECTOR: Jimmie J. Shuldewolf

DESIGNED BY: J.A.J.	SCALE: AS SHOWN
DRAWN BY: J.S.F.	DATE: APRIL, 1980
CHECKED BY: K.R.L.	DRAWING NO. 26709
SHEET	SHEET NO. 4 OF 51

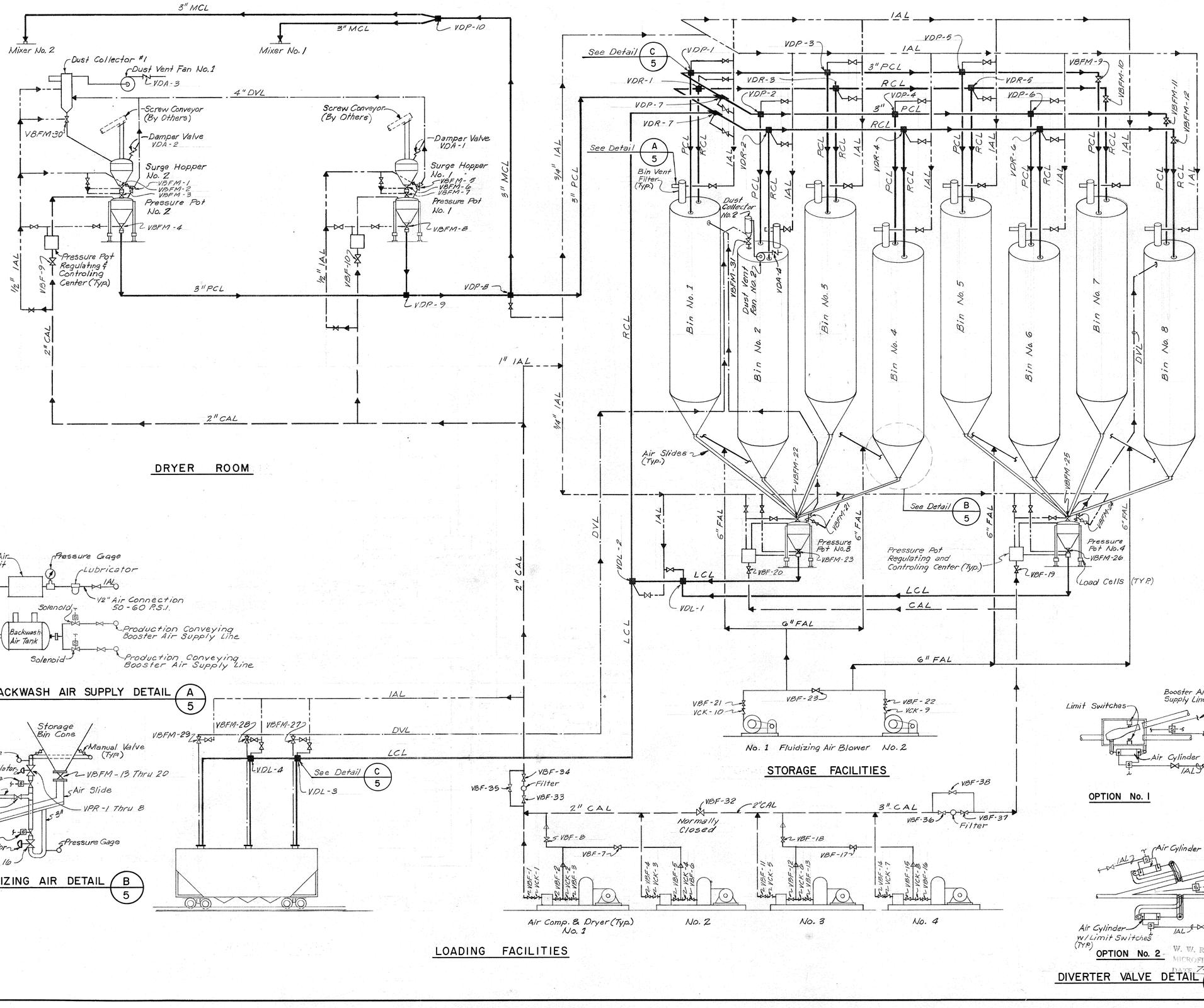

LEGEND

MCL	Mixer Conveying Line
PCL	Production Conveying Line
LCL	Loading Conveying Line
RCL	Recirculation Conveying Line
DVL	Dust Vent Line
CAL	Conveying Air Line
FAL	Fluidizing Air Line
IAL	Instrument Air Line

- Diverter Valve
- Damper Valve
- Butterfly Valve (Man.)
- Check Valve
- Pressure Regulating Valve
- Solenoid Valve
- Normal Flow Direction
- Alternate Flow Direction
- S — Solenoid Switch
- VDP — Diverter Valve Prod. Conv.
- VDR — Diverter Valve Recirculation
- VDL — Diverter Valve Loading
- VBFM — Butterfly Valve Material Handling
- VBF — Butterfly Valve

Note: 1. Booster Air Supply Lines (BAL) Are Parallel To All Conveying Lines But Are Not Shown.

JOB NO. 3304-DS-2

CITY OF HOUSTON
DEPARTMENT OF PUBLIC WORKS

ALMEDA SIMS
SLUDGE DISPOSAL PLANT
PNEUMATIC CONVEYING, STORAGE AND LOADING FACILITIES

CONVEYING SYSTEM SCHEMATIC

RECOMMENDED FOR APPROVAL:
Kenneth Ripley
BINKLEY & HOLMES, INC. CONSULTING ENGINEERS

STATE OF TEXAS — KENNETH RIPLEY — 42797 — REGISTERED PROFESSIONAL ENGINEER
STATE OF TEXAS — 51196 — REGISTERED PROFESSIONAL ENGINEER

APPROVED:

Walter Williams — WASTEWATER	
WATER	Jerry Jenkins — CONSTRUCTION
STORM SEWER	
ASST. DIRECTOR	Jimmie Schindewolf — DIRECTOR

DESIGNED BY: J.A.J. SCALE: NONE
DRAWN BY: J.S.F. DATE: APRIL 1980
CHECKED BY: K.R.L. DRAWING NO. 26709
SHEET SHEET NO. 5 OF 51

W. W. RECORDS MICROFILM

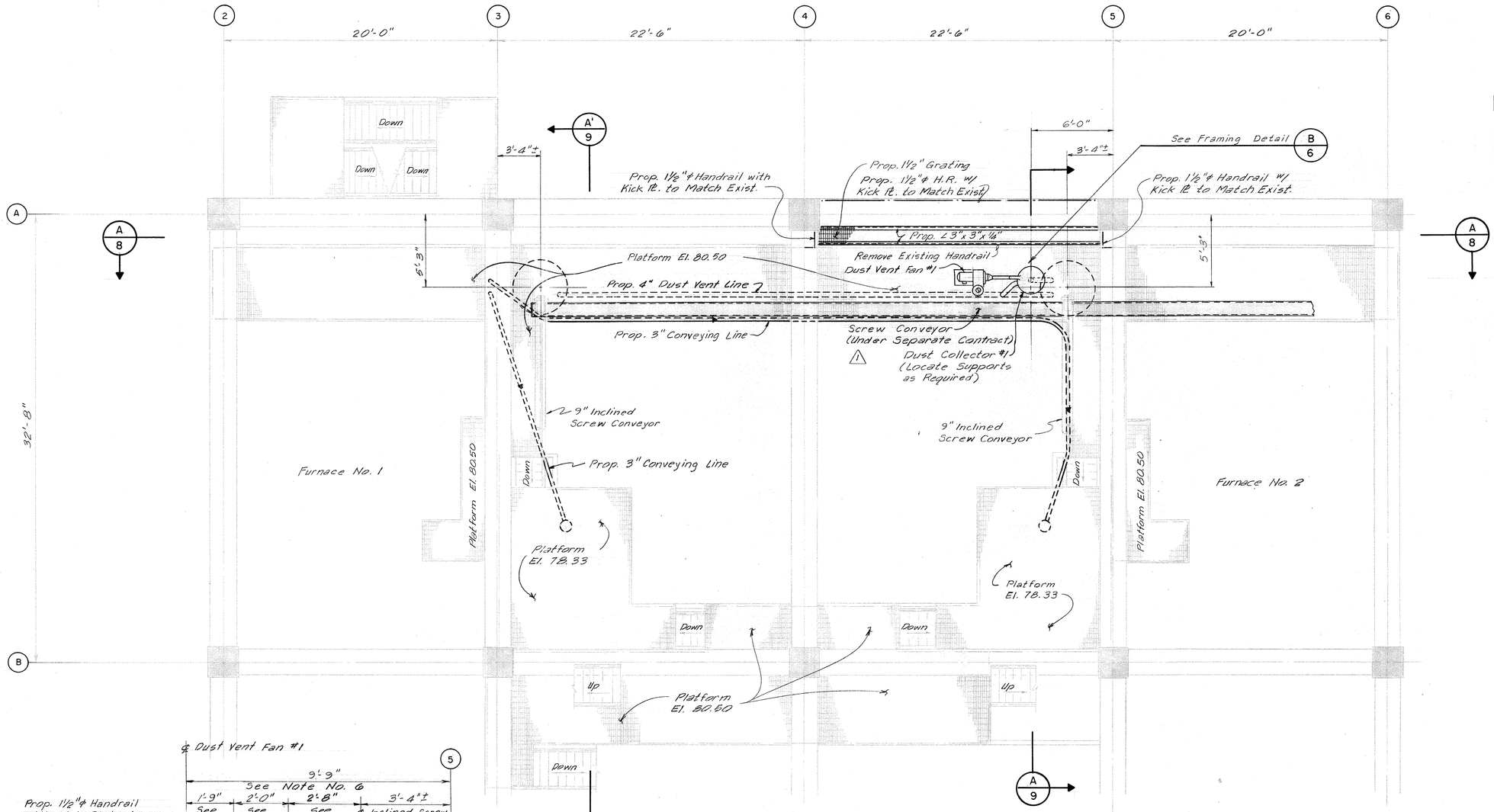

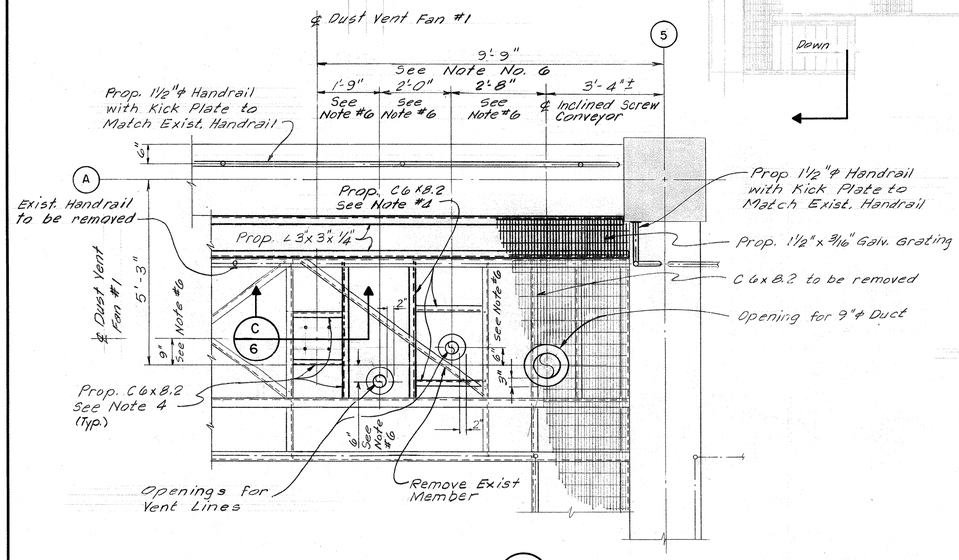

FRAMING DETAIL B/6
SCALE: 1/2" = 1'-0"

PLAN AT ELEVATION 80.50 A/6
SCALE: 1/4" = 1'-0"

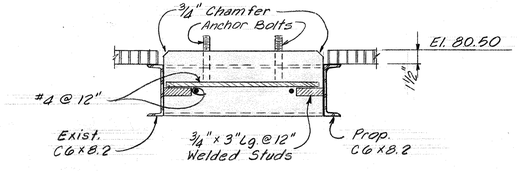

SECTION C/6
SCALE: 1 1/2"= 1'-0"

LEGEND

MCL	Mixer Conveying Line
PCL	Production Conveying Line
LCL	Loading Conveying Line
RCL	Recirculation Conveying Line
DVL	Dust Vent Line
CAL	Conveying Air Line
FAL	Fluidizing Air Line
IAL	Instrument Air Line

NOTES:

1. Contractor shall Field Verify all Dimensions.
2. All Proposed Connections to Existing Structural Members shall be Bolted Connections with Drilled Holes.
3. Galvanize all Structure Steel after Fabrication.
4. Contractor shall furnish Structural Member Supports and Brackets as required for Equipment Furnished.
5. Proposed work is Indicated by Bold Lines.
6. Location and size of openings shall be verified with equipment furnished.

W. W. RECORDS
MICROFILM
DATE 7-21-83

NO.	DATE	REVISION	APPROVED BINKLEY & HOLMES	APPROVED CITY OF HOUSTON
1	Jan '82	Show Conveyor Under Separate Cont		

JOB NO. 3304-DS-2

CITY OF HOUSTON
DEPARTMENT OF PUBLIC WORKS

ALMEDA SIMS
SLUDGE DISPOSAL PLANT
PNEUMATIC CONVEYING, STORAGE AND LOADING FACILITIES

DRYER ROOM
PLAN AT ELEV. 80.50

RECOMMENDED FOR APPROVAL:
Kenneth Ribshaw
BINKLEY & HOLMES, INC. CONSULTING ENGINEERS

STATE OF TEXAS — JOSEPH A. LANDA — 43292 — REGISTERED PROFESSIONAL ENGINEER
STATE OF TEXAS — KENNETH E. LINDSEY — 31158 — REGISTERED PROFESSIONAL ENGINEER

APPROVED:
WASTEWATER
PAVING
WATER
CONSTRUCTION
STORM SEWER
ASST. DIRECTOR
DIRECTOR

DESIGNED BY: J. A. J. SCALE: AS SHOWN
DRAWN BY: B. J. L. DATE: APRIL 1980
CHECKED BY: K. R. L. DRAWING NO. 26709
SHEET SHEET NO. 6 OF 51

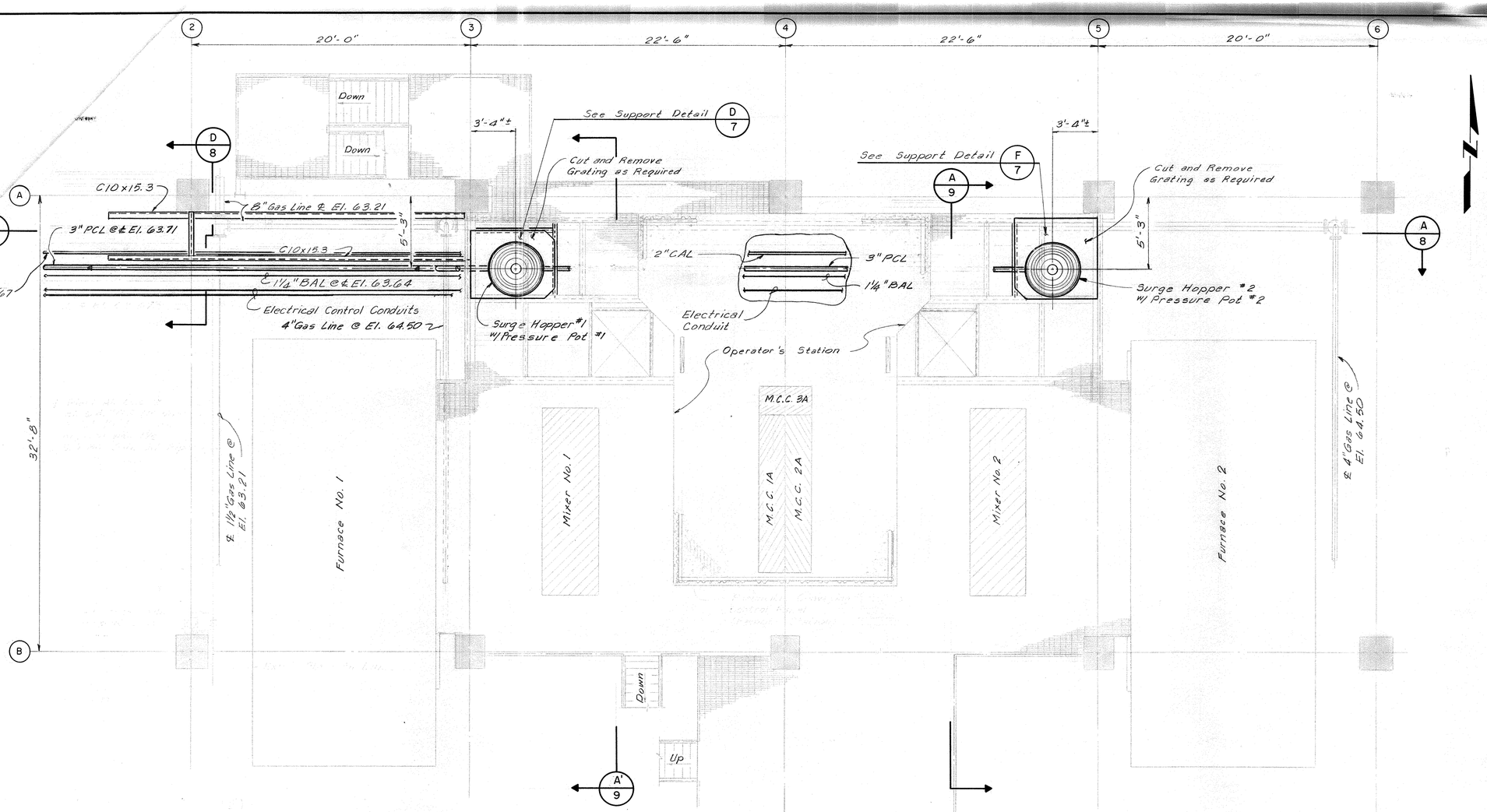

NOTES:

1. Contractor shall field verify all Dimensions.
2. All Proposed Connections to Existing Structural Members shall be Bolted Connections with Drilled Holes.
3. Galvanize all Structure Steel after Fabrication.
4. Contractor shall Relocate Existing Lines 3" and Smaller that conflict with the Prop. Conveying Lines.
5. Contractor shall furnish Structural Member Supports and Brackets as required for Equipment Furnished.
6. Proposed Work is indicated by Bold Lines.

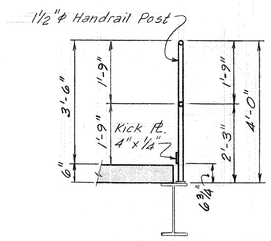

HANDRAIL DETAIL B 7
SCALE: 1/2" = 1'-0"

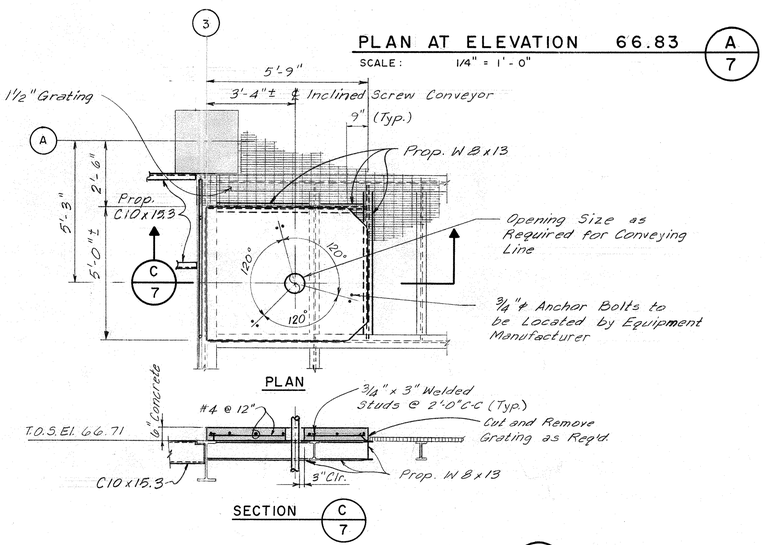

PRESSURE POT SUPPORT DETAIL D 7
SCALE: 3/8" = 1'-0"

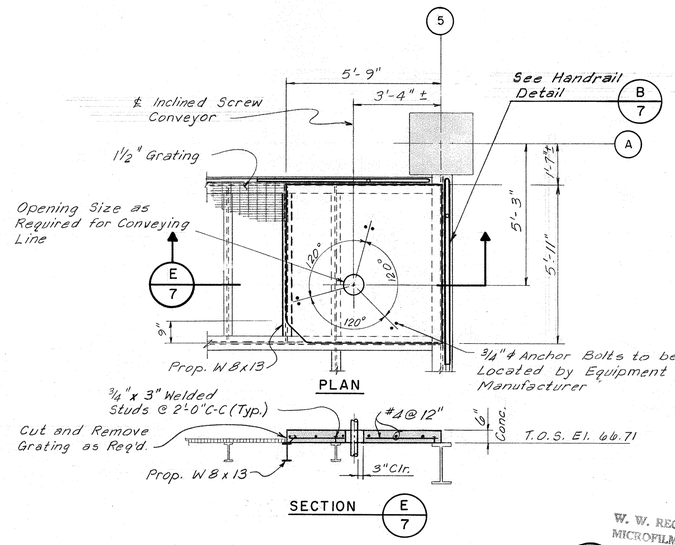

PRESSURE POT SUPPORT DETAIL F 7
SCALE: 3/8" = 1'-0"

W. W. RECORDS MICROFILM DATE 7-21-83

JOB NO. 3304-DS-2

CITY OF HOUSTON
DEPARTMENT OF PUBLIC WORKS

ALMEDA SIMS
SLUDGE DISPOSAL PLANT
PNEUMATIC CONVEYING, STORAGE AND LOADING FACILITIES

DRYER ROOM
PLAN AT ELEV. 66.83

RECOMMENDED FOR APPROVAL:
Kenneth R. Lindsey
BINKLEY & HOLMES, INC. CONSULTING ENGINEERS

STATE OF TEXAS JOSEPH R. ANDA 31158 REGISTERED PROFESSIONAL ENGINEER

STATE OF TEXAS KENNETH R. LINDSEY 31158 REGISTERED PROFESSIONAL ENGINEER

APPROVED:

WASTEWATER	PAVING
WATER	CONSTRUCTION
STORM SEWER	
ASST. DIRECTOR	DIRECTOR

DESIGNED BY: J. A. J. SCALE: AS SHOWN
DRAWN BY: B. J. L. DATE: APRIL 1980
CHECKED BY: K. R. L. DRAWING NO. 26709
SHEET SHEET NO. 7 OF 51

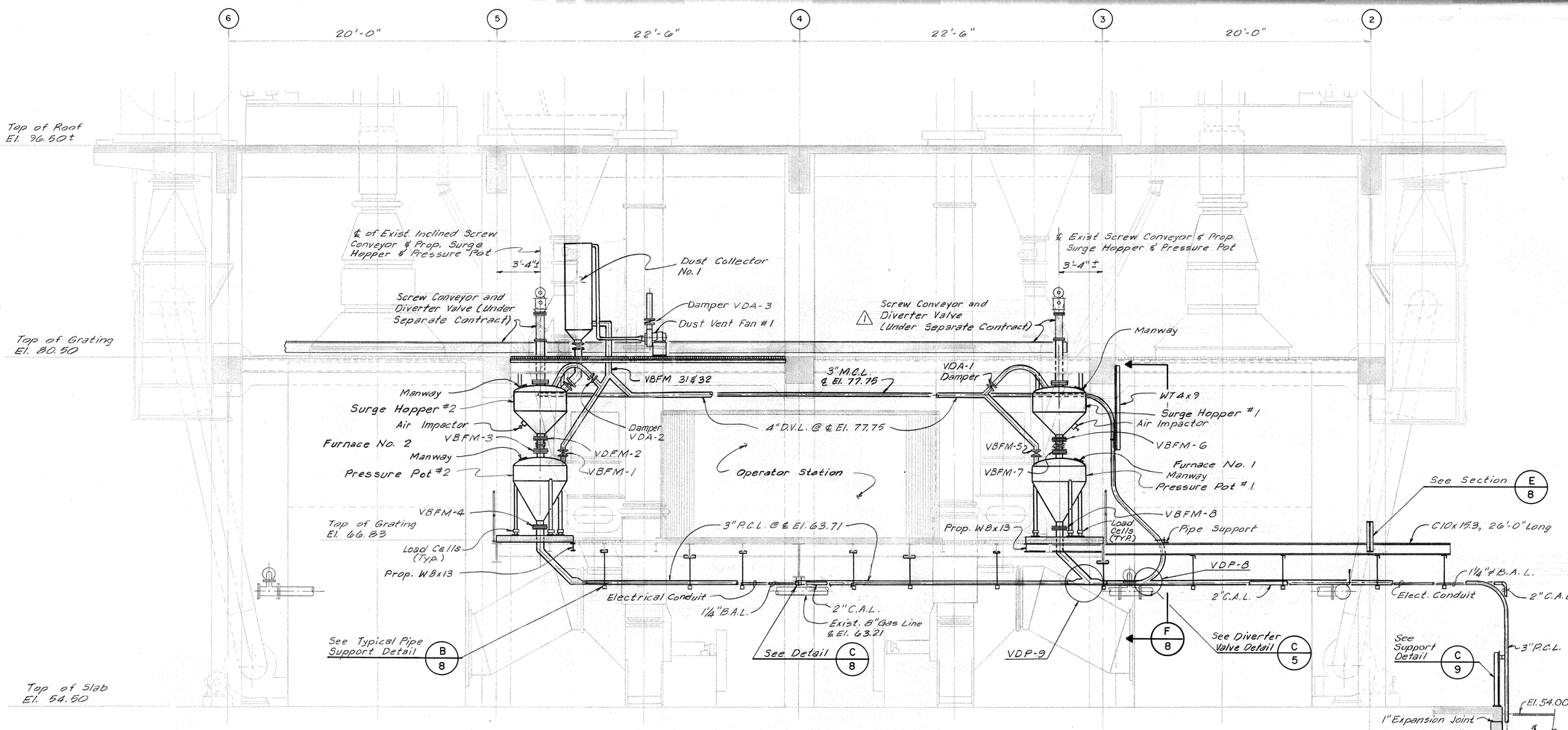

NOTES:

1. Contractor shall Field Verify all Dimensions.
2. All Proposed Connections to Exist. Structural Members shall be Bolted Connections with Drilled Holes.
3. Galvanize all Structure Steel after Fabrication.
4. Contractor shall furnish Structural Member Supports and Brackets as required for Equipment furnished.
5. Proposed Work indicated by Bold Lines.
6. For Beam Clamps and Pipe Hangers see specifications.

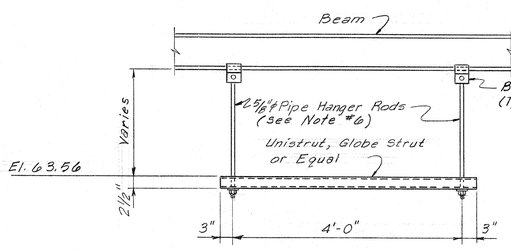

TYPICAL PIPE SUPPORT DETAIL B 8
SCALE: 3/4" = 1'-0"

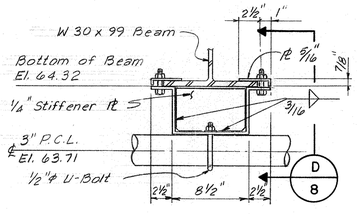

DETAIL C 8
SCALE: 11/2"=1'-0"

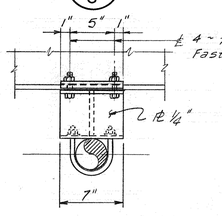

SECTION D 8
SCALE: 11/2"=1'-0"

SECTION A 8
SCALE: 1/4" = 1'-0"

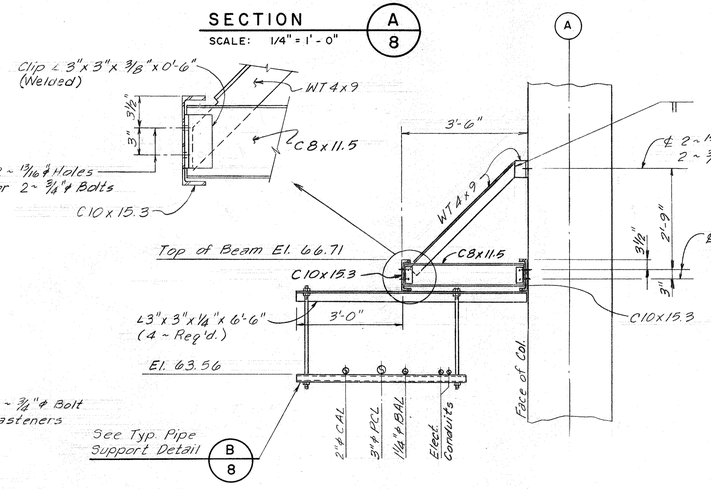

SECTION E 8
SCALE: 1/2" =1'-0"

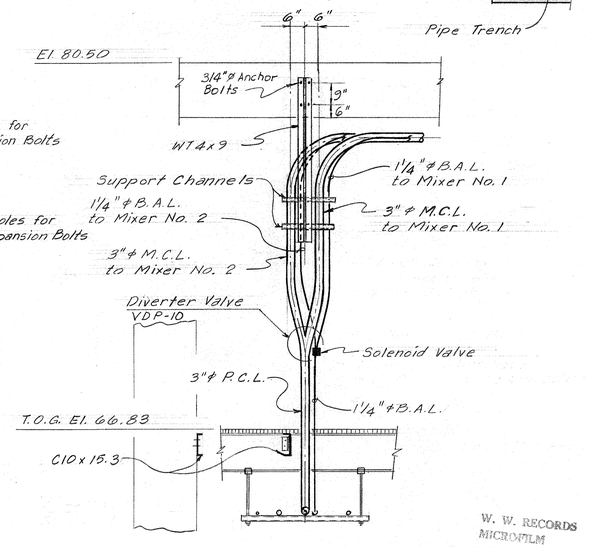

SECTION F 8
SCALE: 3/8" =1'-0"

NO.	DATE	REVISION	APPROVED BINKLEY & HOLMES	APPROVED CITY OF HOUSTON
1	Jan.; '82	Show Conveyor Under Separate Cont.		

W. W. RECORDS MICROFILM DATE 7-21-83

JOB NO. 3304-D5-2

CITY OF HOUSTON
DEPARTMENT OF PUBLIC WORKS

ALMEDA SIMS
SLUDGE DISPOSAL PLANT
PNEUMATIC CONVEYING, STORAGE AND LOADING FACILITIES

DRYER ROOM
SECTIONS AND DETAILS

RECOMMENDED FOR APPROVAL:
Kenneth R. Lindsey
BINKLEY & HOLMES, INC. CONSULTING ENGINEERS

STATE OF TEXAS — JOSEPH J. JANDA — 42921 — REGISTERED PROFESSIONAL ENGINEER

STATE OF TEXAS — KENNETH R. LINDSEY — 51158 — REGISTERED PROFESSIONAL ENGINEER

APPROVED:

WASTEWATER	PAVING
WATER	CONSTRUCTION
STORM SEWER	
ASST. DIRECTOR	DIRECTOR

DESIGNED BY: J. A. J. SCALE: AS SHOWN
DRAWN BY: B. J. L. DATE: APRIL 1980
CHECKED BY: K. R. L. DRAWING NO. 26709
SHEET SHEET NO. 8 OF 51

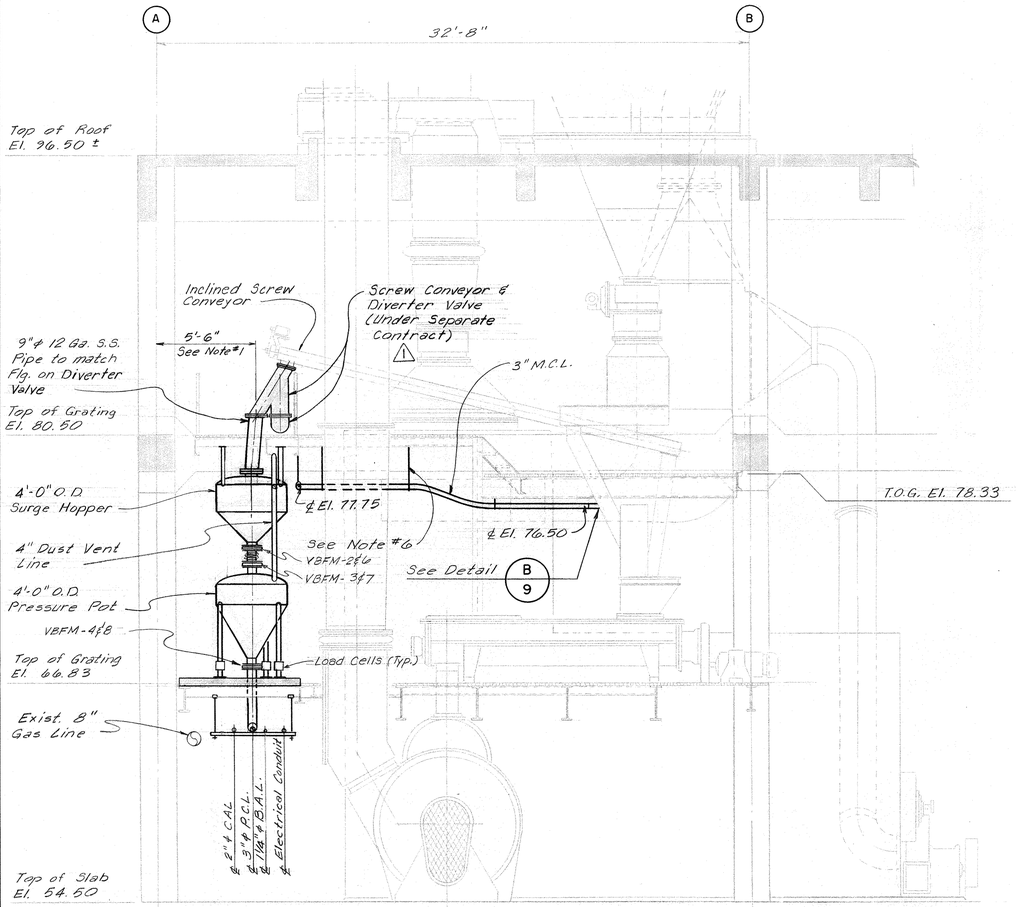

SECTION A 9 — A' 9
SCALE: 1/4" = 1'-0"
SECTION "A" AS SHOWN
SECTION "A'" OPP. HAND

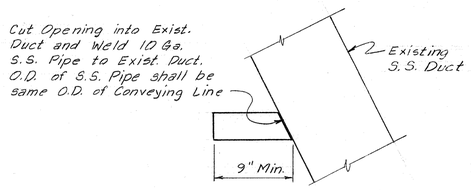

CONNECTION DETAIL B 9
N.T.S.

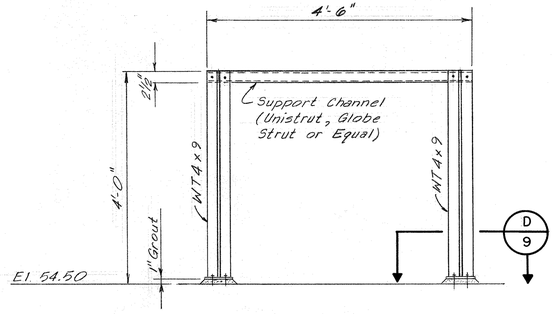

SUPPORT DETAIL C 9
SCALE: 3/4" = 1'-0"

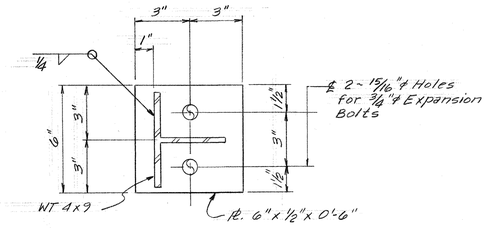

SECTION D 9
SCALE: 3" = 1'-0"

NOTES:
1. Contractor shall Field Verify all Dimensions.
2. All Proposed Connections to Exist. Structural Members shall be Bolted Connections with Drilled Holes.
3. Galvanize all Structure Steel after Fabrication.
4. Contractor shall furnish Structural Member Supports and Brackets as required for Equipment furnished.
5. Proposed Work indicated by Bold Lines.
6. For Pipe Hangers see specifications.

JOB NO. 3304-DS-2

CITY OF HOUSTON
DEPARTMENT OF PUBLIC WORKS

ALMEDA SIMS
SLUDGE DISPOSAL PLANT
PNEUMATIC CONVEYING, STORAGE AND LOADING FACILITIES

DRYER ROOM
SECTIONS AND DETAILS
Kenneth R. Lindsey
RECOMMENDED FOR APPROVAL:

BINKLEY & HOLMES, INC. CONSULTING ENGINEERS

STATE OF TEXAS — JOSE J. LANDA — 42971 — REGISTERED PROFESSIONAL ENGINEER
STATE OF TEXAS — KENNETH R. LINDSEY — 31158 — REGISTERED PROFESSIONAL ENGINEER

APPROVED:
WASTEWATER — Walter Williams
WATER
STORM SEWER — ASST. DIRECTOR
PAVING CONSTRUCTION — Jerry Dinkins
DIRECTOR — Jimmie L. Chinderlu

NO.	DATE	REVISION	APPROVED BINKLEY & HOLMES	APPROVED CITY OF HOUSTON
1	Jan. '82	Show Conveyor Under Separate Cont.		

DESIGNED BY: J.A.J. SCALE: AS SHOWN
DRAWN BY: B.J.L. DATE: APRIL 1980
CHECKED BY: K.R.L. DRAWING NO. 26709
SHEET SHEET NO. 9 OF 51

W. W. RECORDS
MICROFILM
DATE 7-21-13

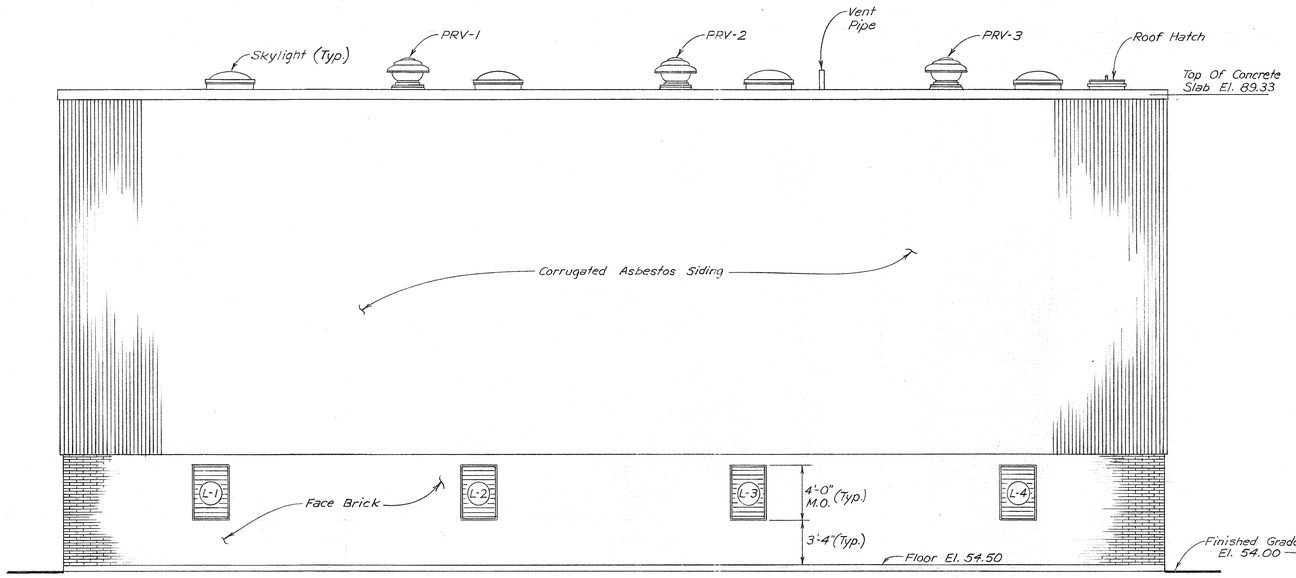

NORTH ELEVATION

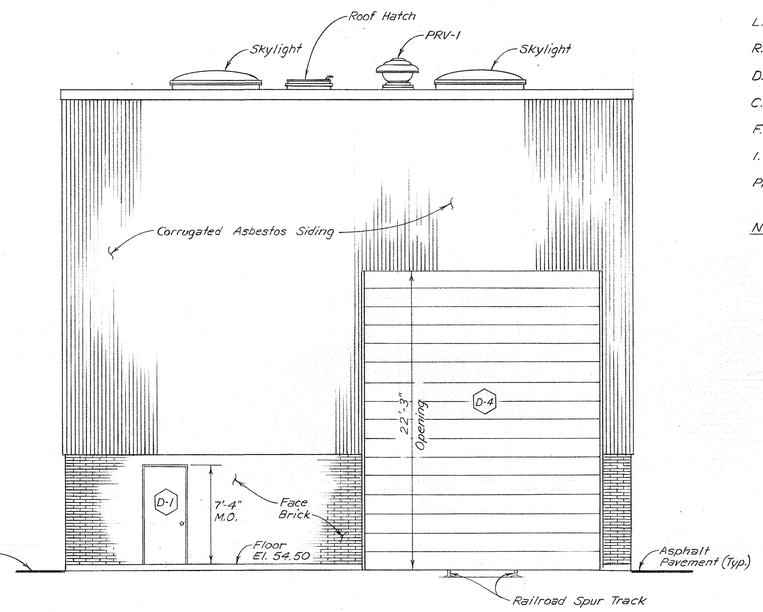

EAST ELEVATION

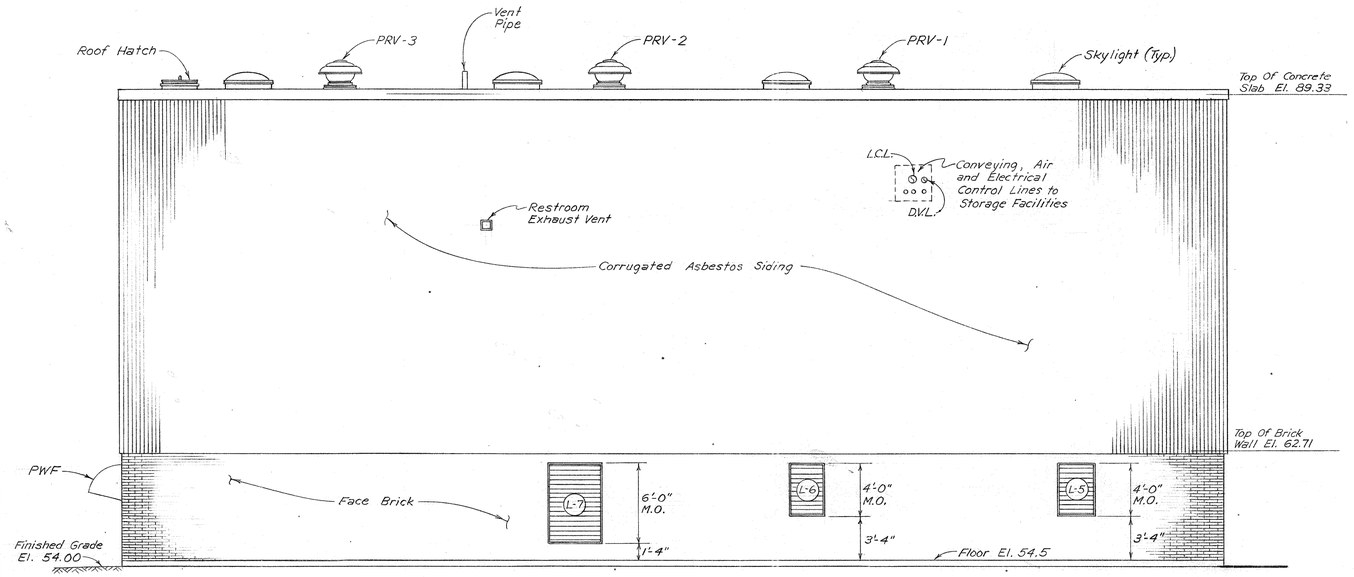

SOUTH ELEVATION

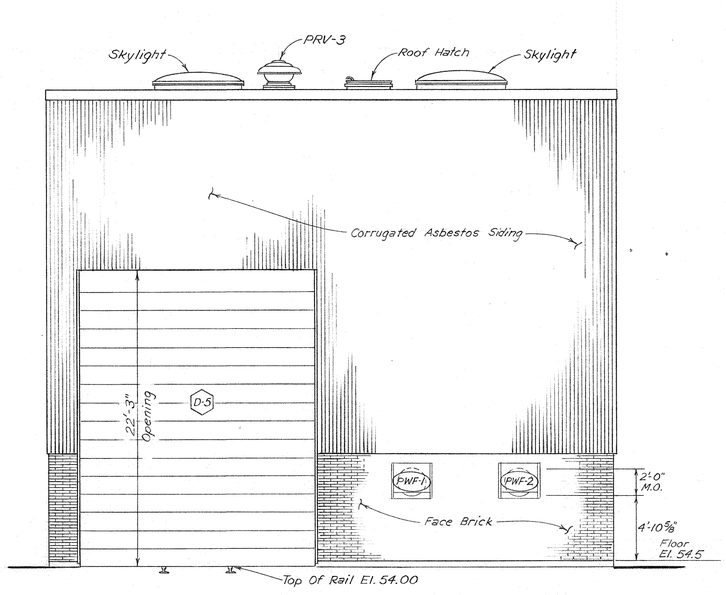

WEST ELEVATION

LEGEND

M.C.L. Mixer Conveying Line
P.C.L. Production Conveying Line
L.C.L. Loading Conveying Line
R.C.L. Recirculation Conveying Line
D.V.L. Dust Vent Line
C.A.L. Conveying Air Line
F.A.L. Fluidizing Air Line
I.A.L. Instrument Air Line
Plt. Air Plant Air

NOTES:

1. See Door Schedule on Sheet No. 32 for additional information on Doors.
2. See Sheet No. 33 for PWF Ventilation Fans Details and for Window and Louver Schedule and Details.
3. See Sheet No. 36, "Plumbing And HVAC Isometric", for routing of air and water lines, and for heating, and Air Conditioning.

JOB NO. 3304-DS-2

CITY OF HOUSTON
DEPARTMENT OF PUBLIC WORKS

ALMEDA SIMS
SLUDGE DISPOSAL PLANT
PNEUMATIC CONVEYING, STORAGE AND LOADING FACILITIES

LOADING FACILITIES
ELEVATIONS

Kenneth R. Lindsey

RECOMMENDED FOR APPROVAL:

BINKLEY & HOLMES, INC. CONSULTING ENGINEERS

STATE OF TEXAS — JOSEPH A. JANDA — 42921 — REGISTERED PROFESSIONAL ENGINEER

STATE OF TEXAS — KENNETH R. LINDSEY — 41158 — REGISTERED PROFESSIONAL ENGINEER

APPROVED:

WASTEWATER — Walter Williams
WATER
PAVING — Jerry Dinkins — CONSTRUCTION
STORM SEWER
ASST. DIRECTOR
DIRECTOR — Jimmie Schindewolf

DESIGNED BY: J.A.J. SCALE: 3/16"= 1'-0"
DRAWN BY: G.A.S. DATE: APRIL 1980
CHECKED BY: K.R.L. DRAWING NO. 26709
SHEET: SHEET NO. 10 OF 51

W. W. RECORDS MICROFILM DATE 7-21-83

GENERAL NOTES

1. Loading area floor drains shall be Josam # 34526, Zurn or equal.
2. Compressor Room floor drains shall be Josam # 32004, Zurn or equal.
3. Air gaps for cooling and condensate drains shall be Josam # 1800, Zurn or equal.
4. "P" Traps for floor drains and equipment drains shall be Josam # 1950, Zurn or equal.
5. Locate floor drains between R.R. track ties. Adjust East - West location as required.
6. Accoustical CMU's in Compressor Room walls except at horizontal and vertical steel bar reinforcement locations.

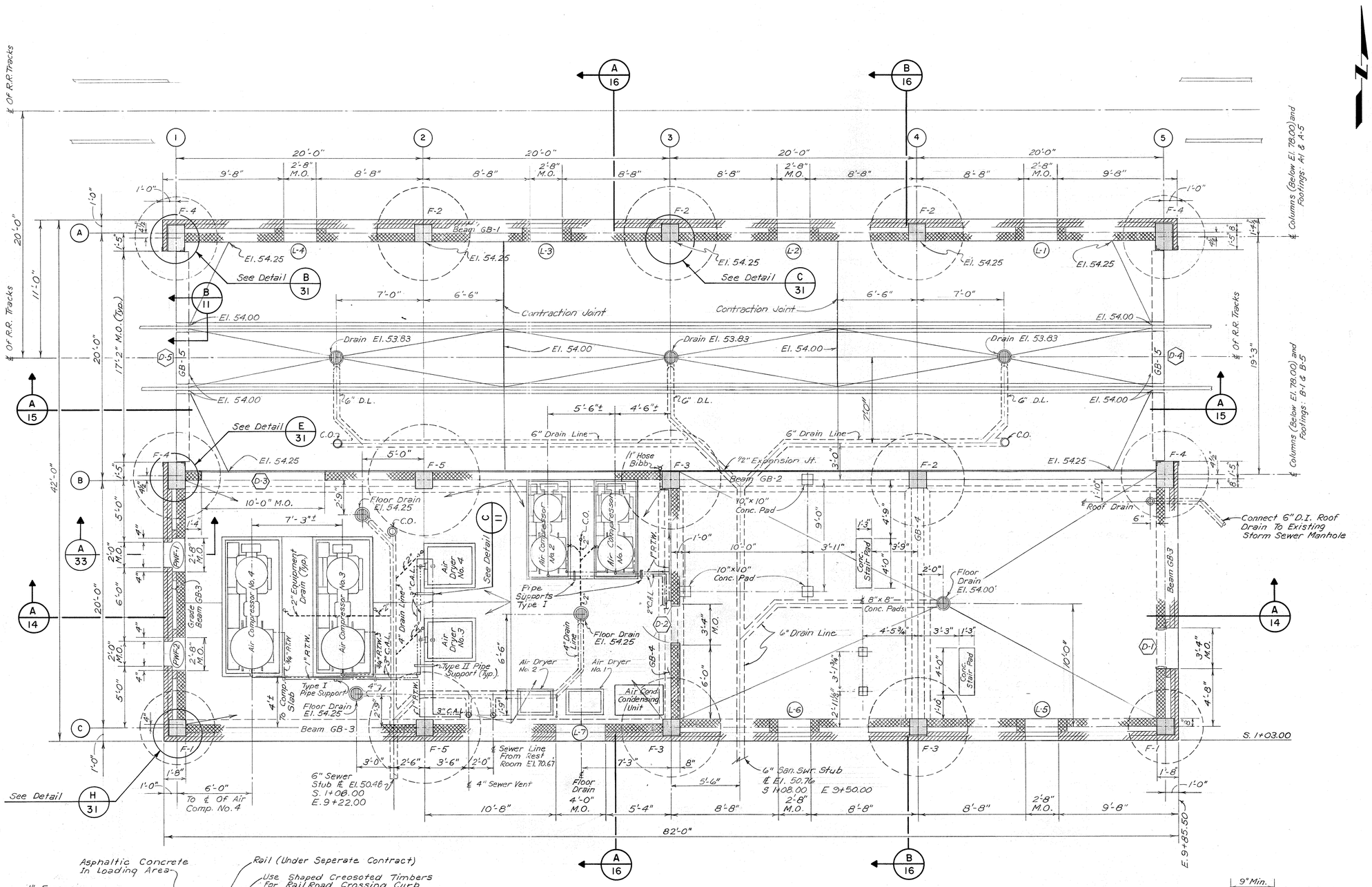

GROUND FLOOR PLAN AT ELEVATION 54.50

SCALE: 1/4" = 1'-0"

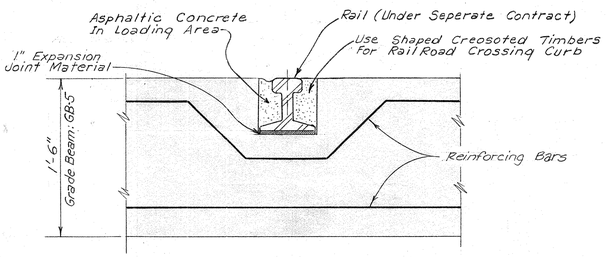

SECTION B/11

SCALE: 1 1/2" = 1'-0"

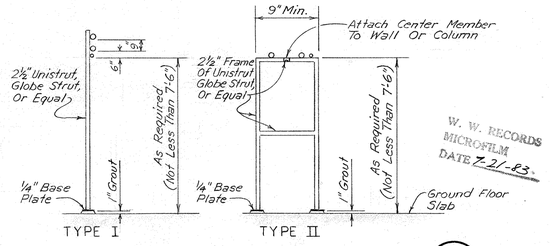

PIPE SUPPORT DETAILS C/11

SCALE: NONE

W. W. RECORDS MICROFILM DATE 7-21-83

JOB No. 3304-DS-2

CITY OF HOUSTON
DEPARTMENT OF PUBLIC WORKS

ALMEDA SIMS
SLUDGE DISPOSAL PLANT
PNEUMATIC CONVEYING, STORAGE AND LOADING FACILITIES

LOADING FACILITIES
GROUND FLOOR PLAN

RECOMMENDED FOR APPROVAL:
Kenneth R. Lindsey
BINKLEY & HOLMES, INC. CONSULTING ENGINEERS

STATE OF TEXAS — JOHN C. LANDA — 42751 — REGISTERED PROFESSIONAL ENGINEER
STATE OF TEXAS — KENNETH R. LINDSEY — 51158 — REGISTERED PROFESSIONAL ENGINEER

APPROVED:

WASTEWATER	PAVING
WATER	CONSTRUCTION
STORM SEWER	
ASST. DIRECTOR	DIRECTOR

DESIGNED BY: J.A.J. & J.L.R. SCALE: AS SHOWN
DRAWN BY: G.A.S. DATE: APRIL 1980
CHECKED BY: K.R.L. DRAWING NO. 26709
SHEET SHEET NO. 11 OF 51

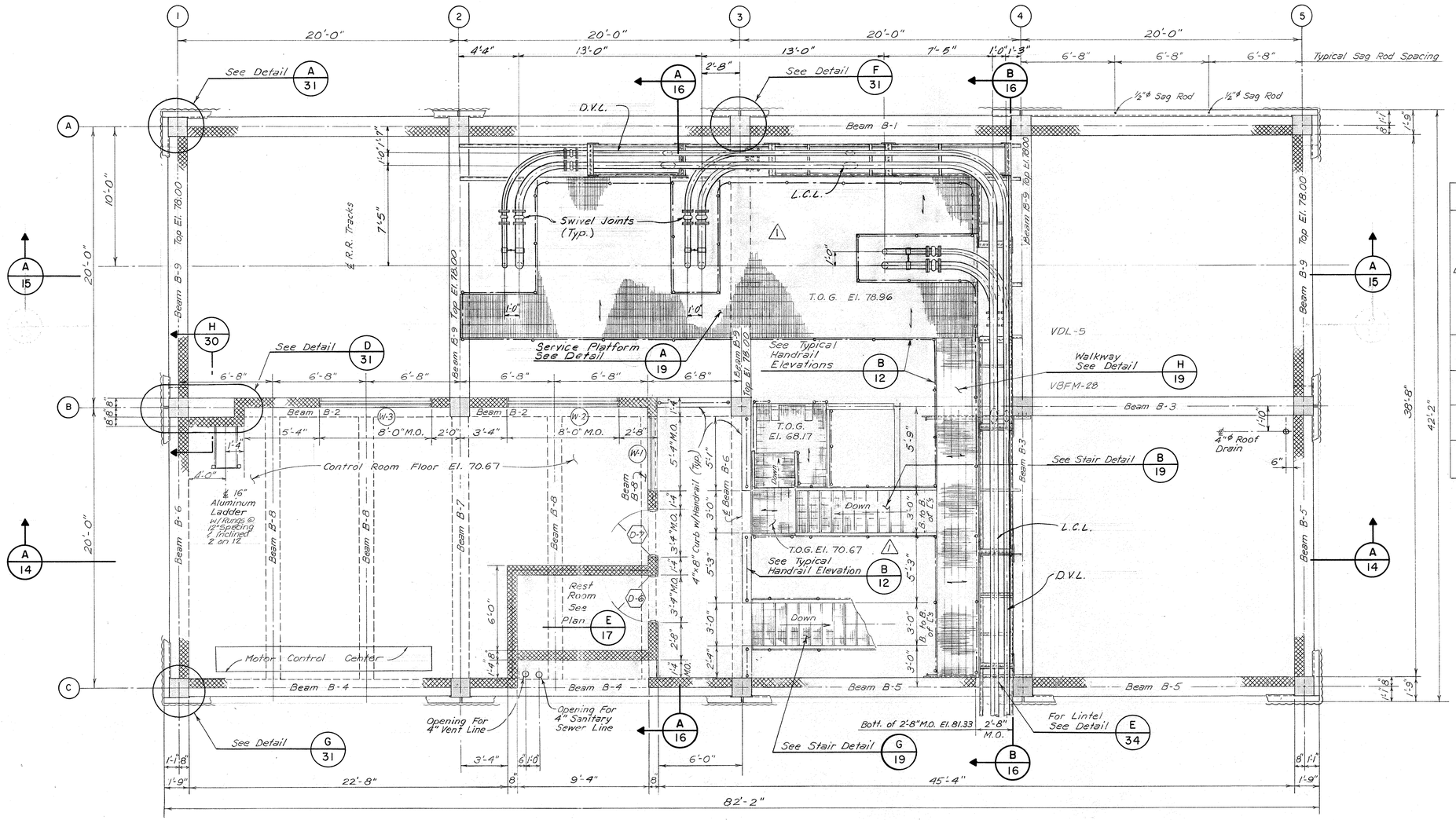

CONTROL LEVEL PLAN AT ELEV. 70.67' AND ELEV. 83.00' — A 12

SCALE: 1/4" = 1'-0"

ROOM DESIGNATION	CEILING: ACOUSTICAL 2'x4' LAYIN	CEILING: EXPOSED STR.	CEILING: HEIGHT	WALLS: STANDARD CMU PAINTED	WALLS: ACOUSTICAL CMU UNPAINTED	WALLS: GLAZED CMU	WALLS: STANDARD CMU UNPAINTED	FLOOR: TROWELED, SLIP RESISTANT CONC.	FLOOR: VINYL ASBESTOS TILE	REMARKS
CONTROL ROOM	X	–	10'-0"	–	–	X	–	–	X	
REST ROOM	X	–	8'-0"	–	–	X	–	–	X	
COMPRESSOR ROOM	–	X	–	–	X	–	X	X	–	SEE NOTE 1. BELOW
LOADING AREA	–	X	–	X	–	–	–	X	–	

NOTE:
1. Accoustical CMU's in Compressor Room wall except at horizontal and vertical bar reinforcement locations.

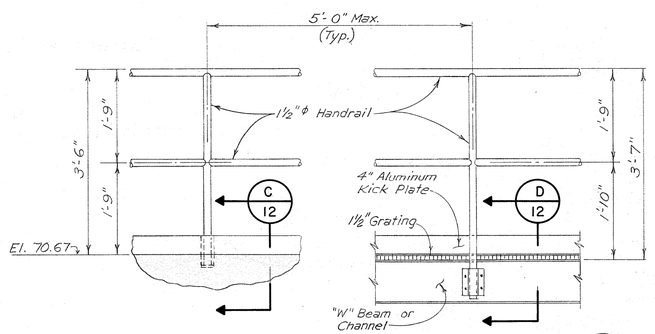

TYPICAL HANDRAIL ELEVATIONS — B 12

SCALE: 3/8" = 1'-0"

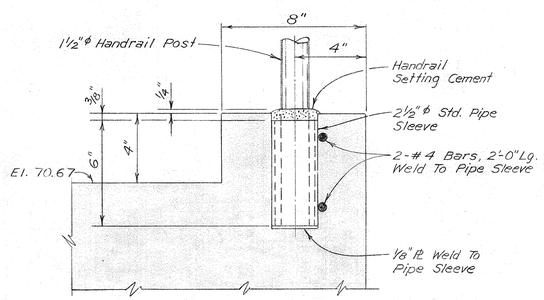

CURB SECTION WITH HANDRAIL POST SLEEVE — C 12

SCALE: 3" = 1'-0"

NO.	DATE	REVISION	APPROVED BINKLEY & HOLMES	APPROVED CITY OF HOUSTON
1	Jan. '82	Deleted Box Car Loading & Modification to Hopper Car Loading		

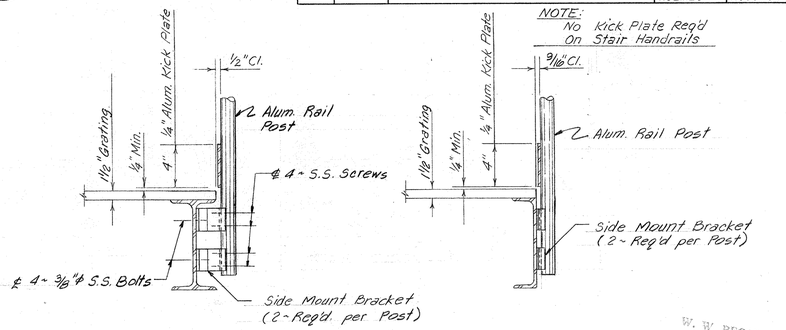

HANDRAIL POSTS – SIDE MOUNT — D 12

SCALE: 1 1/2" = 1'-0"

W. W. RECORDS MICROFILM DATE 7-21-83

JOB NO. 3304-DS-2

CITY OF HOUSTON
DEPARTMENT OF PUBLIC WORKS

ALMEDA SIMS SLUDGE DISPOSAL PLANT
PNEUMATIC CONVEYING, STORAGE AND LOADING FACILITIES

LOADING FACILITIES
CONTROL LEVEL FLOOR PLAN

RECOMMENDED FOR APPROVAL:
Kenneth R. Lindsey
BINKLEY & HOLMES, INC. CONSULTING ENGINEERS

STATE OF TEXAS — JOSEPH M. LINDA — 6192 — REGISTERED PROFESSIONAL ENGINEER
STATE OF TEXAS — KENNETH R. LINDSEY — 31158 — REGISTERED PROFESSIONAL ENGINEER

APPROVED:
WASTEWATER — Walter Williams
WATER
PAVING — Jerry Dinkins CONSTRUCTION
STORM SEWER — ASST. DIRECTOR
DIRECTOR — Jimmie R. Quinn

DESIGNED BY: J.A.J. & J.L.R. SCALE: AS SHOWN
DRAWN BY: G.A.S. DATE: APRIL 1980
CHECKED BY: K.R.L. DRAWING NO. 26709
SHEET SHEET NO. 12 OF 51

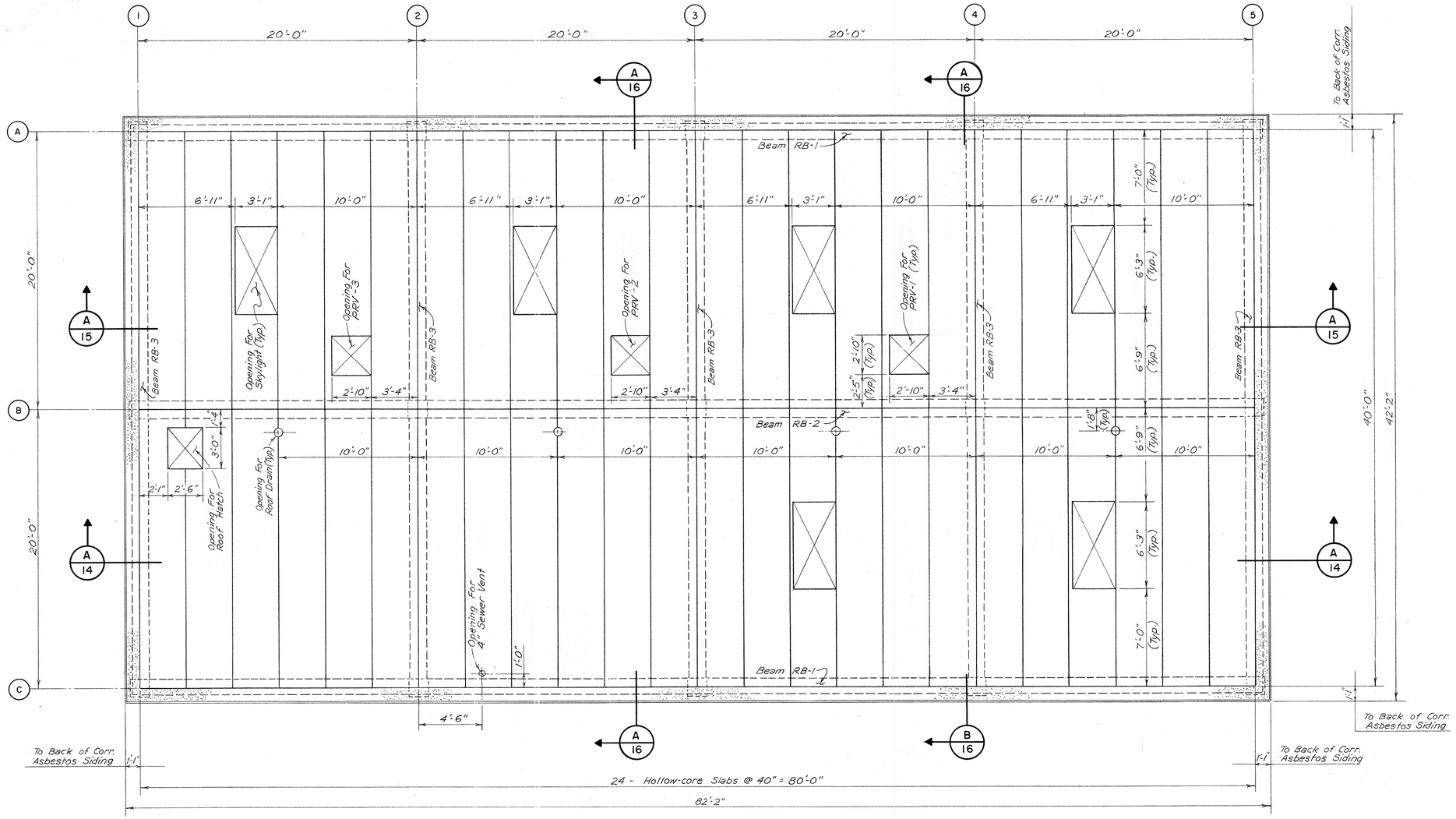

ROOF FRAMING PLAN ELEV. 89.17 (A/13)

SCALE: 1/4" = 1'-0"

W. W. RECORDS MICROFILM DATE 7-21-83

JOB No. 3304-DS-2

CITY OF HOUSTON
DEPARTMENT OF PUBLIC WORKS

ALMEDA SIMS
SLUDGE DISPOSAL PLANT
PNEUMATIC CONVEYING, STORAGE AND LOADING FACILITIES

LOADING FACILITIES
ROOF FRAMING PLAN

RECOMMENDED FOR APPROVAL:
Kenneth R. Lindsey
BINKLEY & HOLMES, INC. CONSULTING ENGINEERS

STATE OF TEXAS — JOSEPH L. LINDSEY — 4297 — REGISTERED PROFESSIONAL ENGINEER

STATE OF TEXAS — KENNETH R. LINDSEY — 31158 — REGISTERED PROFESSIONAL ENGINEER

APPROVED:

Walter Williams — WASTEWATER

WATER

Jerry Perkins — PAVING CONSTRUCTION

STORM SEWER ASST. DIRECTOR

Jimmie L. Blackwell — DIRECTOR

DESIGNED BY: J.A.J. & J.L.R. SCALE: 1/4" = 1'-0"
DRAWN BY: G.A.S. DATE: APRIL 1980
CHECKED BY: K.R.L. DRAWING NO. 26709
SHEET SHEET NO. 13 OF 51

NOTES:

1. Supply Duct (6") to Restroom
2. Accoustical CMU's in Compressor Room walls except at horizontal and vertical steel bar reinforcement locations.
3. The Compressor Foundations shall be of sufficient mass to resist the kenetic Reactions arising from the Compressors, and shall meet the requirements of Equipment Manufacturer and Engineer.
4. Equipment Anchor Bolts shall be sleeved and installed in Accordance with the latest ACI & AISC Specs., and Subject to Approval of the Engineer.

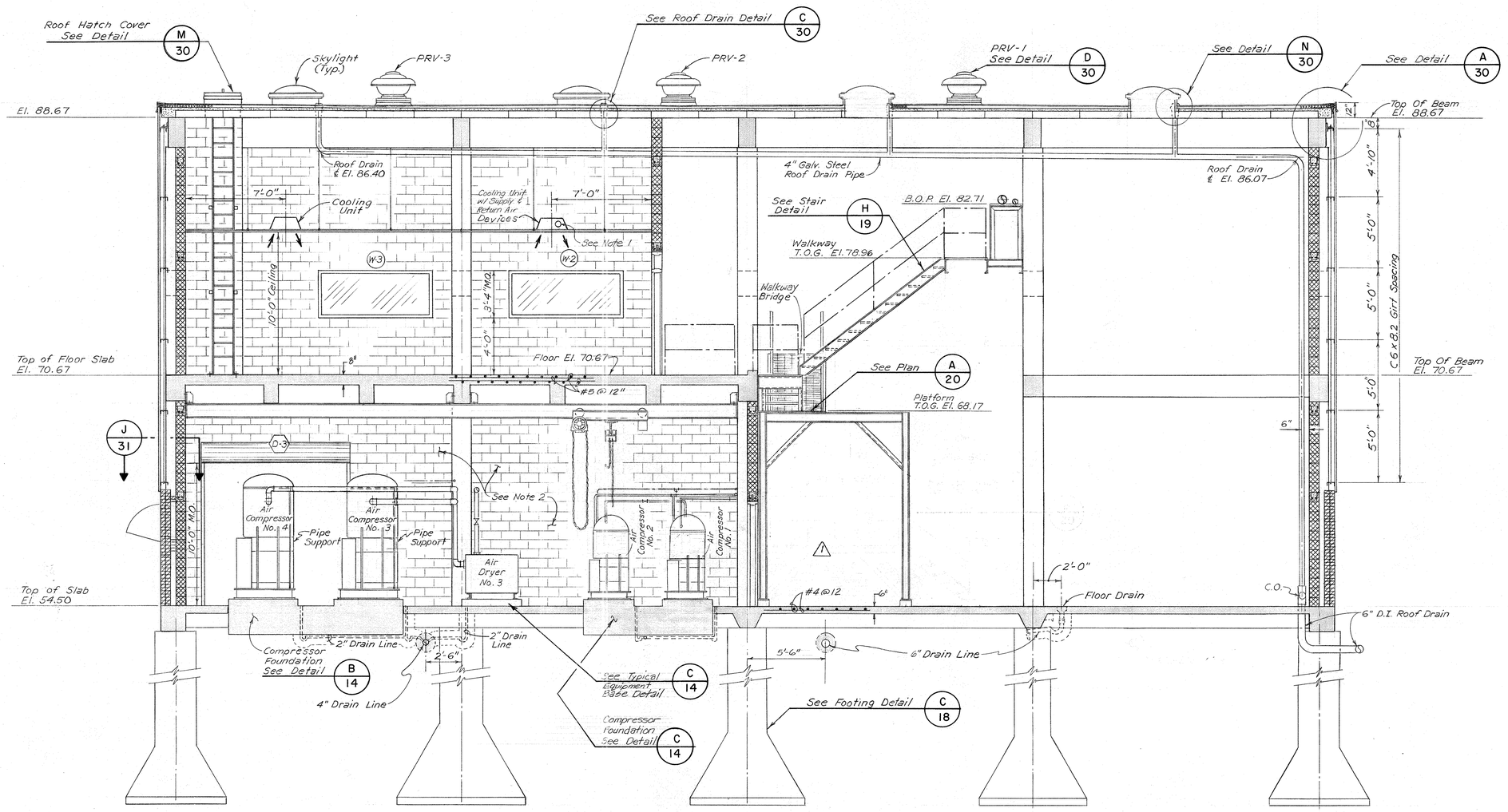

SECTION A 14
SCALE: 1/4" = 1'-0"

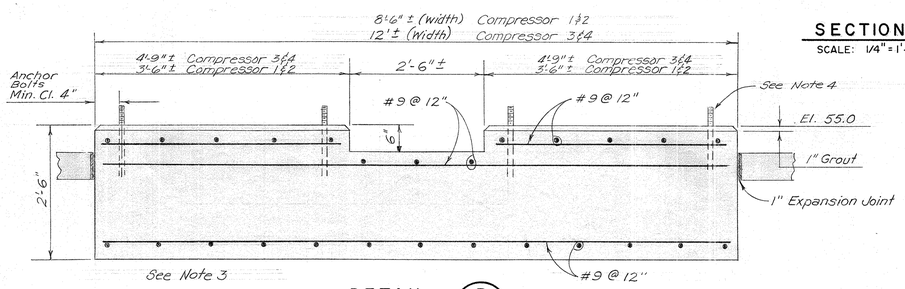

DETAIL B 14
SCALE: 3/4" = 1'-0"

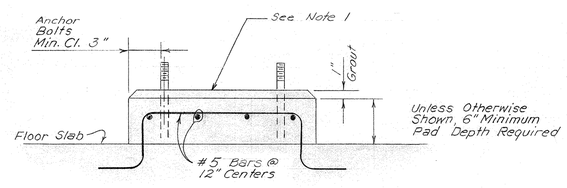

TYPICAL EQUIPMENT BASE DETAIL C 14
N.T.S.

NO.	DATE	REVISION	APPROVED BINKLEY & HOLMES	APPROVED CITY OF HOUSTON
1	Jan. '82	Deleted Box Car Loading		

W. W. RECORDS MICROFILM DATE 7-21-83

JOB NO. 3304-DS-2

CITY OF HOUSTON
DEPARTMENT OF PUBLIC WORKS

ALMEDA SIMS
SLUDGE DISPOSAL PLANT
PNEUMATIC CONVEYING, STORAGE AND LOADING FACILITIES

LOADING FACILITIES SECTION AND DETAILS

RECOMMENDED FOR APPROVAL:
Kenneth R. Lindsey
BINKLEY & HOLMES, INC. CONSULTING ENGINEERS

STATE OF TEXAS — JOSEPH A. JANDA — 42921 — REGISTERED PROFESSIONAL ENGINEER
STATE OF TEXAS — KENNETH R. LINDSEY — 31158 — REGISTERED PROFESSIONAL ENGINEER

APPROVED:
WASTEWATER
PAVING
WATER
CONSTRUCTION
STORM SEWER
ASST. DIRECTOR
DIRECTOR

DESIGNED BY J.A.J. & J.L.R. SCALE: AS SHOWN
DRAWN BY G.A.S. DATE: APRIL 1980
CHECKED BY K.R.L. DRAWING NO. 26709
SHEET SHEET NO. 14 OF 51

NOTES:

1. The Car Loading Hoses and Vent Lines shall be furnished with Break-a-way or weak type Joints.
2. Conveying equipment may require relocating of support member columns.

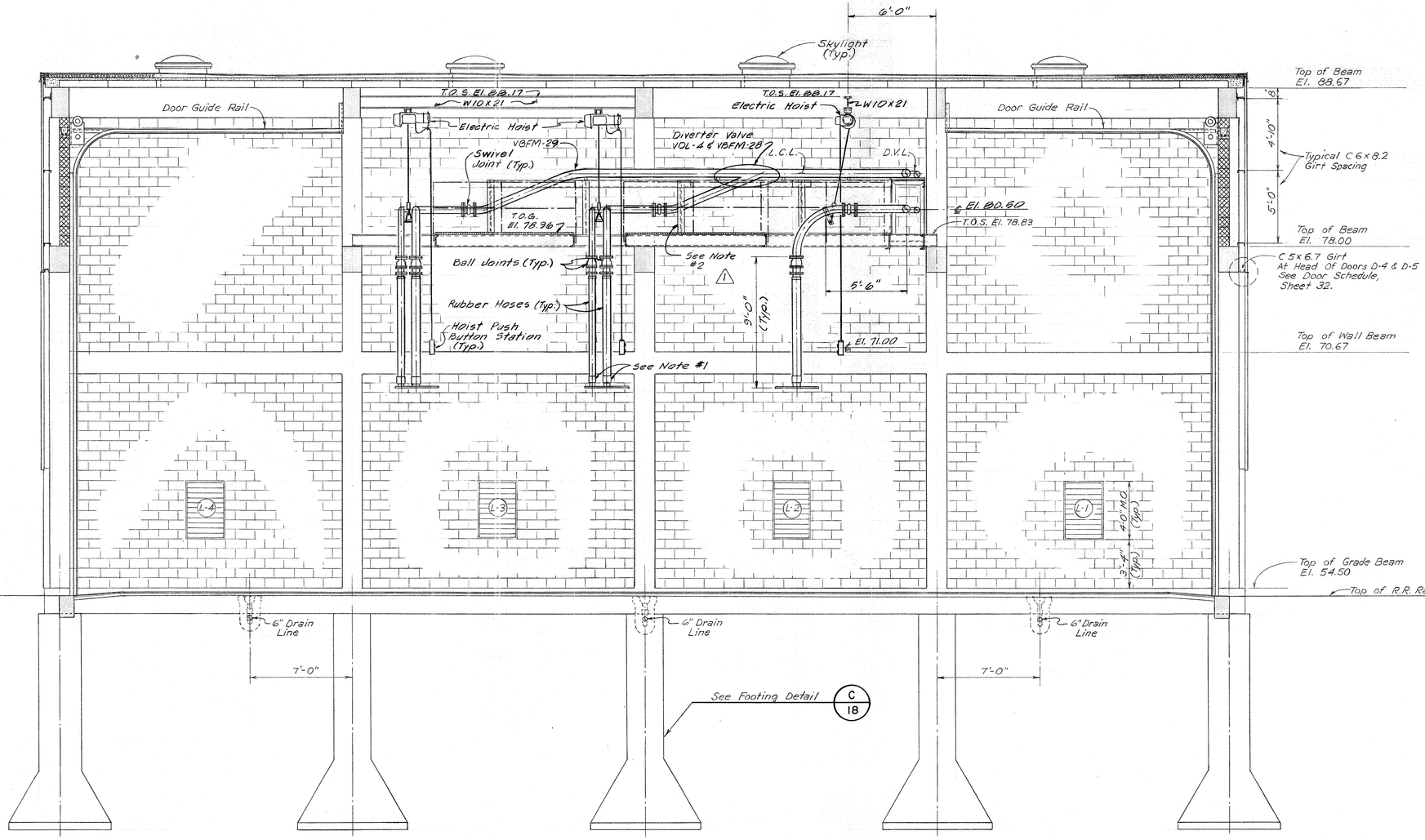

SECTION A/15

SCALE: 1/4" = 1'-0"

W. W. RECORDS MICROFILM DATE 7-21-83

NO.	DATE	REVISION	APPROVED BINKLEY & HOLMES	APPROVED CITY OF HOUSTON
1	Jan. '82	Modification to Hopper car loading		

JOB NO. 3304-DS-2

CITY OF HOUSTON
DEPARTMENT OF PUBLIC WORKS

ALMEDA SIMS
SLUDGE DISPOSAL PLANT
PNEUMATIC CONVEYING, STORAGE AND LOADING FACILITIES

LOADING FACILITIES
SECTION

RECOMMENDED FOR APPROVAL:
Kenneth R. Lindsey
BINKLEY & HOLMES, INC. CONSULTING ENGINEERS

STATE OF TEXAS — JOSEPH A. JANDA — 42921 — REGISTERED PROFESSIONAL ENGINEER

STATE OF TEXAS — KENNETH R. LINDSEY — 31158 — REGISTERED PROFESSIONAL ENGINEER

APPROVED:

Walter Williams — WASTEWATER
WATER
Jerry Dinkins — PAVING CONSTRUCTION
STORM SEWER — ASST. DIRECTOR
Jimmie D. Anderson — DIRECTOR

DESIGNED BY: J.A.J. & J.L.R. SCALE: 1/4" = 1'-0"
DRAWN BY: G.A.S. DATE: APRIL 1980
CHECKED BY: K.R.L. DRAWING NO. 26709
SHEET SHEET NO. 15 OF 51

NOTES:

1. Drill holes into CMU units a maximum of 1/2" larger diameter than pipe. Caulk openings after pipe installation.
2. Conveying equipment may require relocating of support member columns.

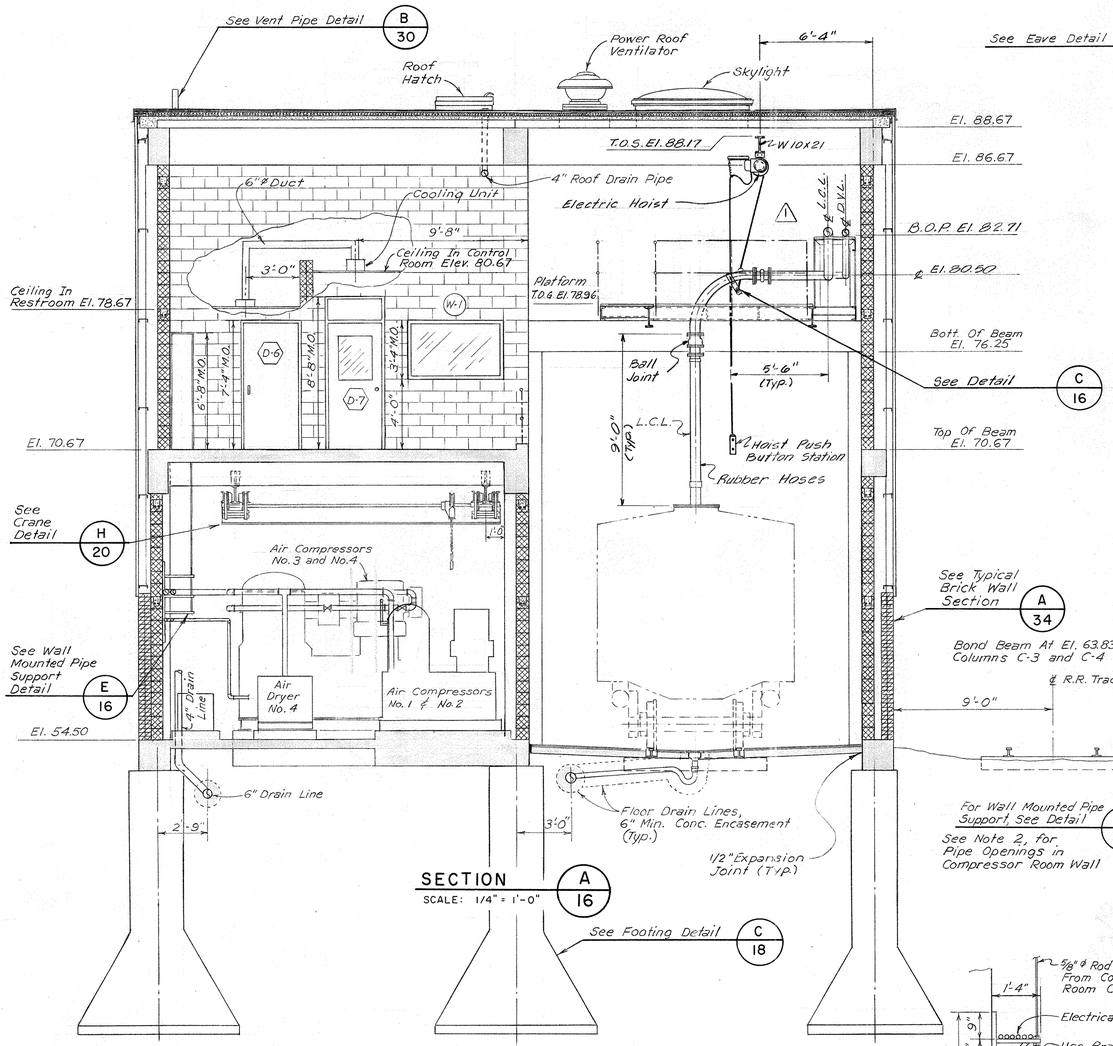

SECTION A/16
SCALE: 1/4" = 1'-0"

See Footing Detail C/18

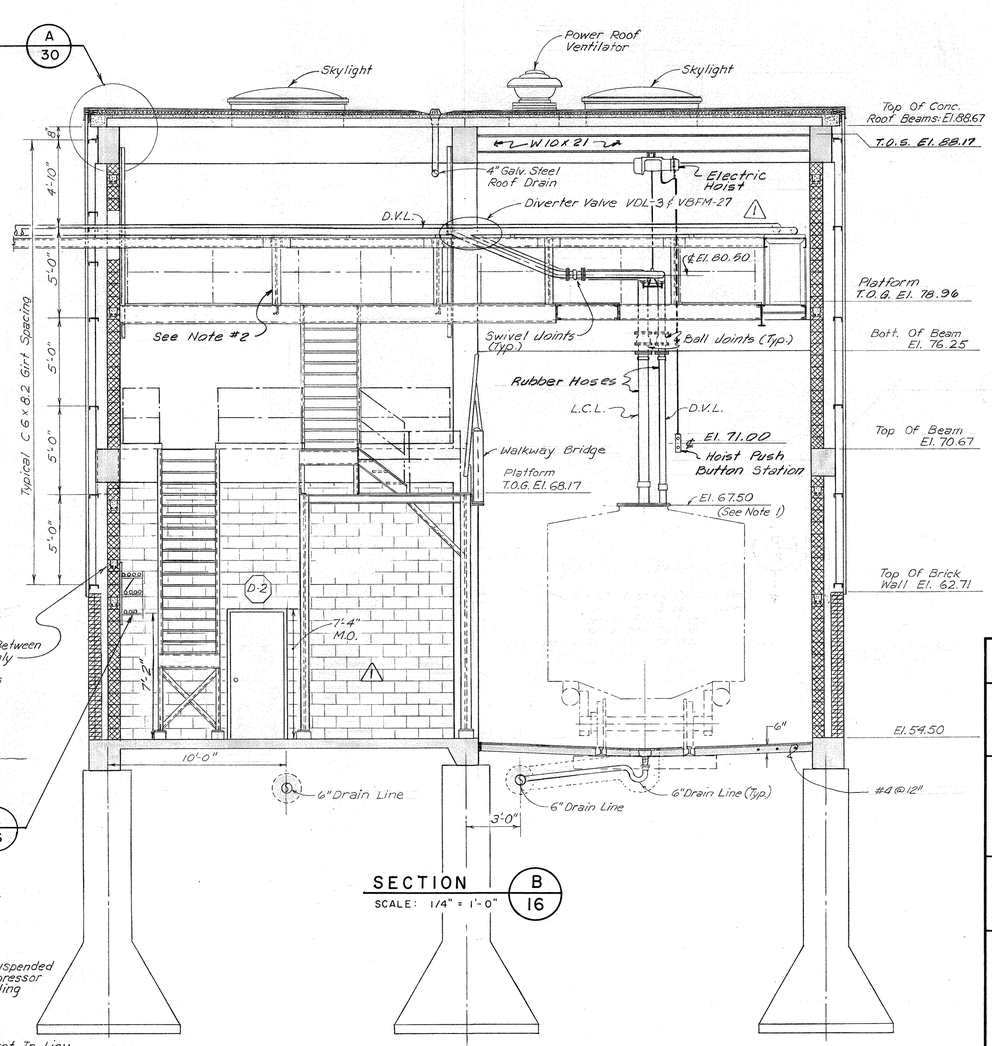

SECTION B/16
SCALE: 1/4" = 1'-0"

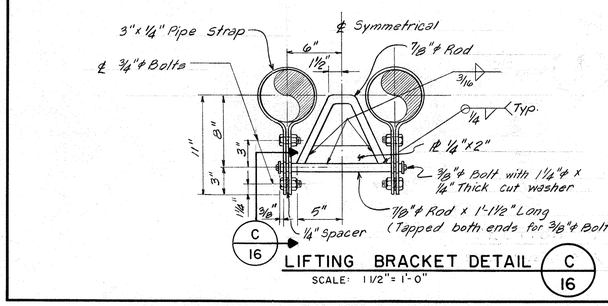

C/16 LIFTING BRACKET DETAIL C/16
SCALE: 1 1/2" = 1'-0"

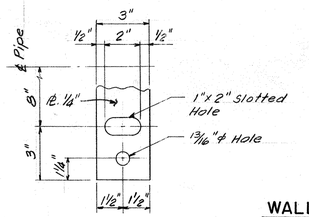

SECTION D/16
SCALE: 3" = 1'-0"

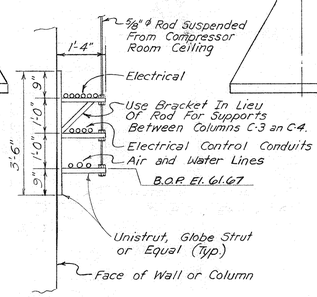

WALL MOUNTED PIPE SUPPORT DETAIL E/16
SCALE: 1/2" = 1'-0"

W. W. RECORDS MICROFILM DATE 7-21-83

NO.	DATE	REVISION	APPROVED BINKLEY & HOLMES	APPROVED CITY OF HOUSTON
1	Jan. '82	Deleted Box Car Loading & Modification to Hopper Car Loading		

JOB NO. 3304-DS-2

CITY OF HOUSTON
DEPARTMENT OF PUBLIC WORKS

ALMEDA SIMS
SLUDGE DISPOSAL PLANT
PNEUMATIC CONVEYING, STORAGE AND LOADING FACILITIES

LOADING FACILITIES SECTIONS AND DETAILS

RECOMMENDED FOR APPROVAL:
Kenneth R. Binkley
BINKLEY & HOLMES, INC. CONSULTING ENGINEERS

STATE OF TEXAS — WALTER W. LANDA — 43501 — REGISTERED PROFESSIONAL ENGINEER

STATE OF TEXAS — KENNETH R. LINSSEY — 41158 — REGISTERED PROFESSIONAL ENGINEER

APPROVED:
Walter Williams — WASTEWATER
Jerry Dinkins — PAVING CONSTRUCTION
WATER
STORM SEWER
Jimmie Schindewolf — ASST. DIRECTOR / DIRECTOR

DESIGNED BY: J.A.J. & J.L.R. SCALE: AS SHOWN
DRAWN BY: G.A.S. DATE: APRIL 1980
CHECKED BY: K.R.L. DRAWING NO. 26709
SHEET SHEET NO. 16 OF 51

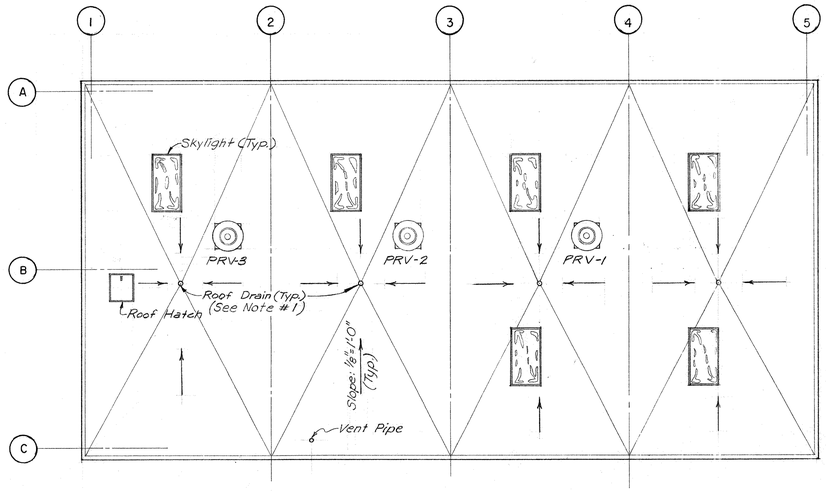

ROOF PLAN — A/17
SCALE: 1/8" = 1'-0"

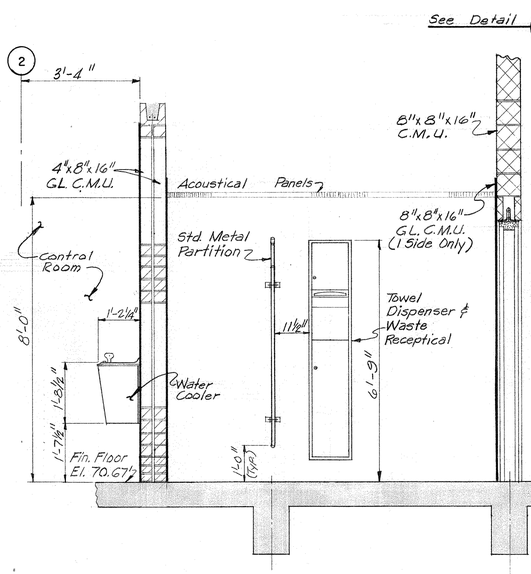

SECTION — B/17
SCALE: 1/2" = 1'-0"

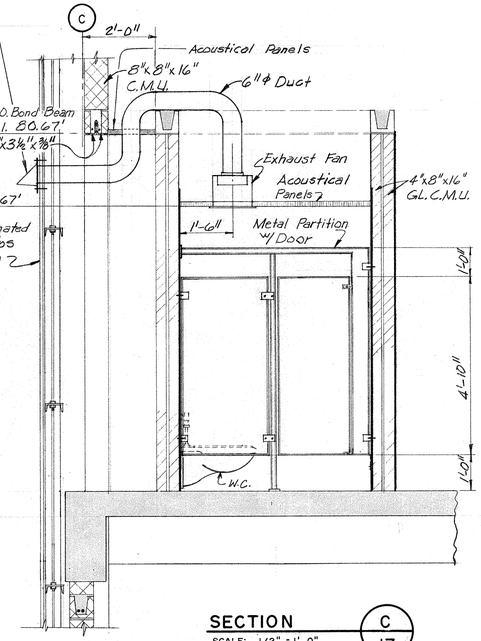

SECTION — C/17
SCALE: 1/2" = 1'-0"

NOTES:

1. Roof Drains Shall Be Josam #21504, Zurn Or Equal.
2. Rest Room Floor Drain Shall be Josam #34526, Zurn Or Equal.
3. Refer to Plumbing Isometric for additional information for Restroom Piping See Sheet No. 36.

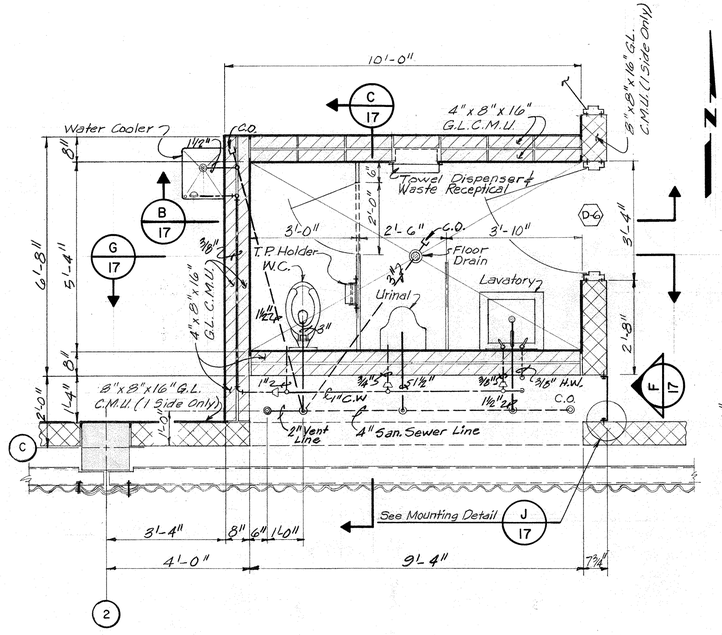

FLOOR PLAN — E/17
SCALE: 1/2" = 1'-0"

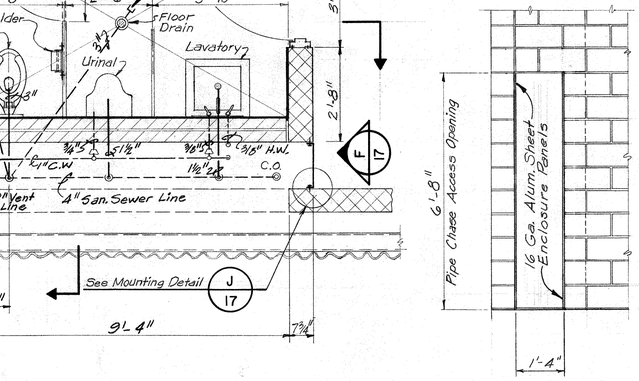

ELEVATION — F/17
SCALE: 1/2" = 1'-0"

SECTION — G/17
SCALE: 1/2" = 1'-0"

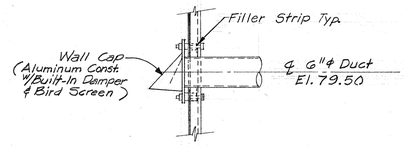

WALL CAP DETAIL — D/17
SCALE: NONE

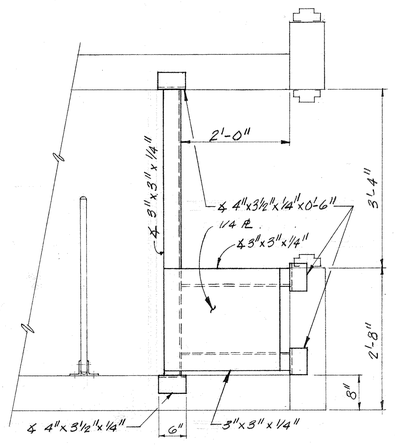

HOT WATER HEATER SUPPORT DETAIL — H/17
SCALE: 3/4" = 1'-0"

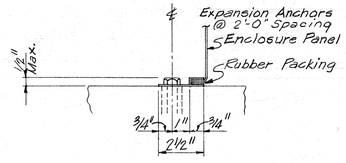

ENCLOSURE PANEL MOUNTING DETAIL — J/17
SCALE: 3" = 1'-0" (TYP. BOTH SIDES OF OPENING)

JOB NO. 3304-DS-2

CITY OF HOUSTON
DEPARTMENT OF PUBLIC WORKS

ALMEDA SIMS
SLUDGE DISPOSAL PLANT
PNEUMATIC CONVEYING, STORAGE AND LOADING FACILITIES

LOADING FACILITIES
ROOF PLAN - RESTROOM
FLOOR PLAN AND SECTIONS

RECOMMENDED FOR APPROVAL:
Kenneth R. Lindsey
BINKLEY & HOLMES, INC. CONSULTING ENGINEERS

KENNETH R. LINDSEY 41158 REGISTERED PROFESSIONAL ENGINEER STATE OF TEXAS

APPROVED:
Walter Williams — WASTEWATER
Jerry Dinkins — PAVING CONSTRUCTION
WATER
STORM SEWER
ASST. DIRECTOR
Jimmie Schindewolf — DIRECTOR

DESIGNED BY: J.A.J. SCALE: AS SHOWN
DRAWN BY: J.S.F. DATE: APRIL 1980
CHECKED BY: K.R.L. DRAWING NO. 26709
SHEET SHEET NO. 17 OF 51

W. W. RECORDS MICROFILM DATE 7-21-83

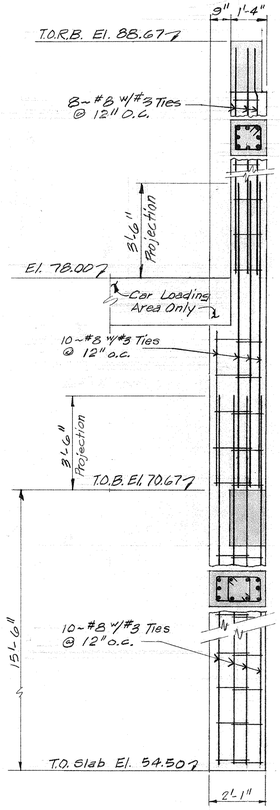

TYPE 1

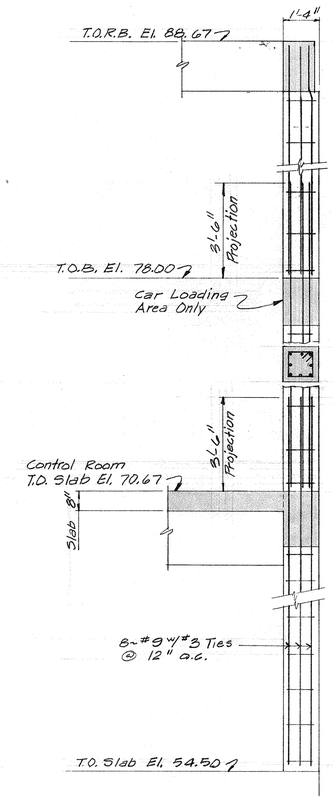

TYPE 2

COLUMN DETAILS (A / 18)
SCALE: NONE

COLUMN SCHEDULE	
TYPE	COLUMN LINE
1	A-1, A-5 & B-1, B-5
2	A-2, A-3, A-4 : B-2, B-3, B-4 C-1, C-2, C-3, C-4, C-5

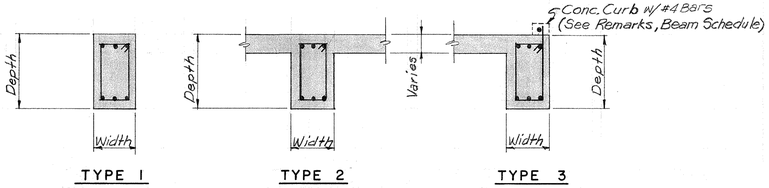

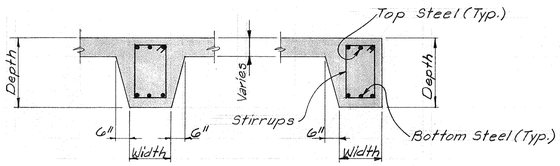

BEAM DETAILS (B / 18)
SCALE: NONE

BEAM SCHEDULE

MARK	TYPE	WIDTH	DEPTH	TOP STEEL	BOT. STEEL	STIRRUPS	REMARKS
GB-1	1	20"	1'-9"	4~#8	4~#8	#3@10"	
GB-2	5	14"	1'-6"	3~#7	3~#7	#3@9"	
GB-3	3	20"	1'-9"	4~#8	4~#8	#3@10"	
GB-4	4	12"	1'-6"	2~#7	2~#7	#3@9"	
GB-5	3	12"	1'-6"	2~#6	2~#6	#3@12"	6"x9" Notch Out for Rails, See Sht. 11
B-1	1	16"	1'-6"	3~#8	3~#8	#3@9"	
B-2	3	16"	2'-6"	3~#11	3~#10	#3@8"	6"x8" Conc. Curb, See Sheet 12
B-3	1	16"	1'-6"	2~#9	2~#9	#3@12"	
B-4	3	16"	2'-6"	3~#10	3~#10	#3@12"	
B-5	1	16"	1'-10"	2~#10	2~#10	#3@10"	
B-6	1	16"	1'-10"	3~#9	3~#9	#3@12"	6"x8" Conc. Curb, See Sheet 12
B-7	2	16"	2'-0"	3~#10	3~#11	#3@8"	
B-8	2	12"	2'-0"	2~#9	2~#9	#3@12"	
B-9	1	16"	1'-9"	3~#8	3~#8	#3@9"	
RB-1	1	14"	2'-0"	3~#8	3~#8	#3@10"	
RB-2	1	16"	2'-0"	3~#9	3~#8	#3@9"	
RB-3	1	14"	2'-0"	3~#8	3~#7	#3@10"	

GB- Grade Beam
B- Intermediate Level Beam
RB- Roof Beam

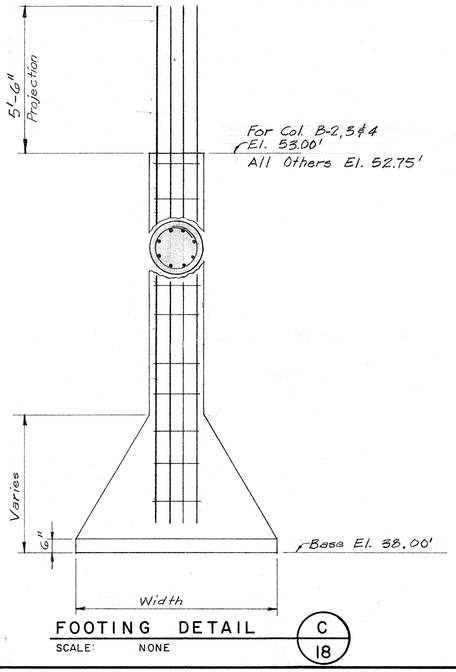

FOOTING DETAIL (C / 18)
SCALE: NONE

FOOTING SCHEDULE

MARK	No. REQ'D.	SHAFT DIA.	BELL DIA.	REBAR	TIES	COLUMN NUMBER
F-1	2	24	72	3~#9	#3@12"	C-1, C-5
F-2	4	30	90			A-2→A-4: B-4
F-3	3	32	96	″	″	B-3, C-3, C-4
F-4	4	34	84	10~#9	″	A-1, A-5: B-1, B-5
F-5	2	36	108	″	#3@12"	B-2, C-2

H. W. RECORDS MICROFILM DATE 7-21-83

JOB NO. 3304-DS-2

CITY OF HOUSTON
DEPARTMENT OF PUBLIC WORKS

ALMEDA SIMS SLUDGE DISPOSAL PLANT
PNEUMATIC CONVEYING, STORAGE AND LOADING FACILITIES

LOADING FACILITIES FOOTING - COLUMN AND BEAM DETAILS AND SCHEDULES

RECOMMENDED FOR APPROVAL:
Kenneth R. Lindsey
BINKLEY & HOLMES, INC. CONSULTING ENGINEERS

APPROVED:
Walter Williams — WASTEWATER
PAVING
WATER
Jerry Jenkins — CONSTRUCTION
STORM SEWER
ASST. DIRECTOR
Jimmie Schindewolf — DIRECTOR

DESIGNED BY: J.L.R. SCALE: AS SHOWN
DRAWN BY: J.S.F. DATE: APRIL 1980
CHECKED BY: K.R.L. DRAWING NO. 26709
SHEET SHEET NO. 18 OF 51

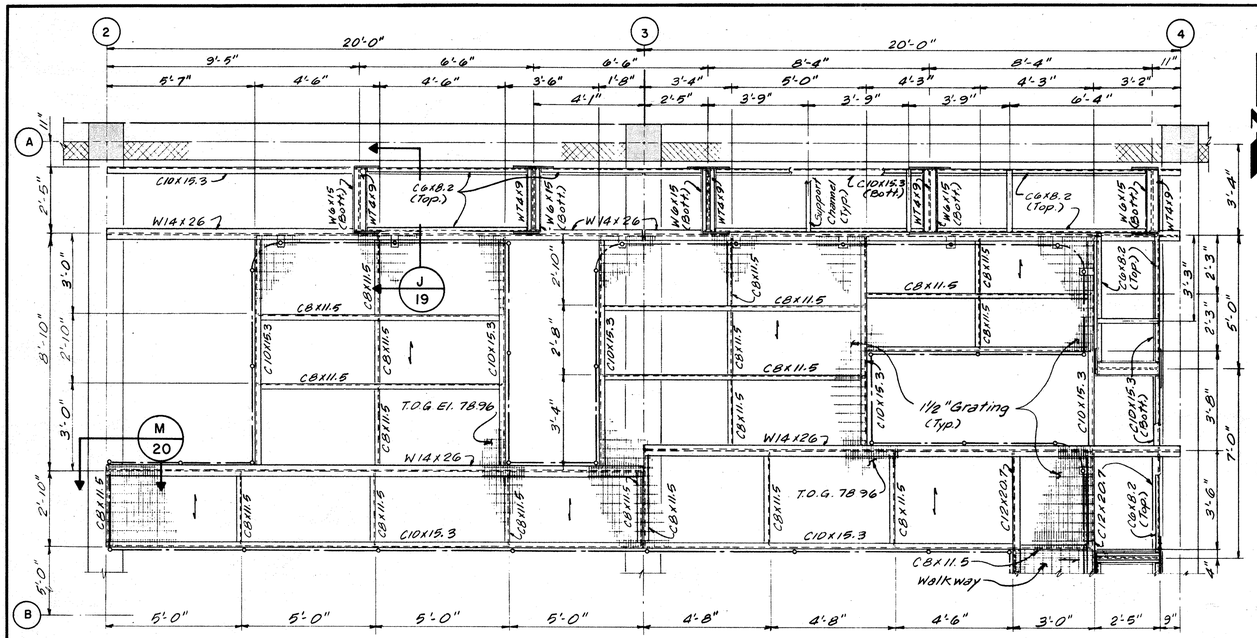

SERVICE PLATFORM DETAIL — A 19
SCALE: 3/8" = 1'-0"

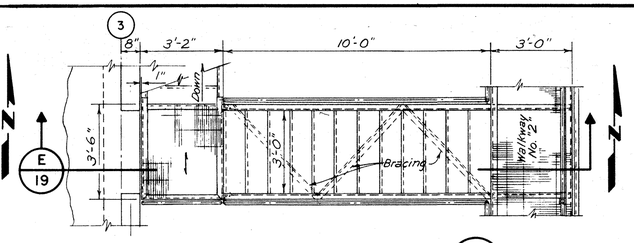

STAIR DETAIL — B 19
SCALE: 3/8" = 1'-0"

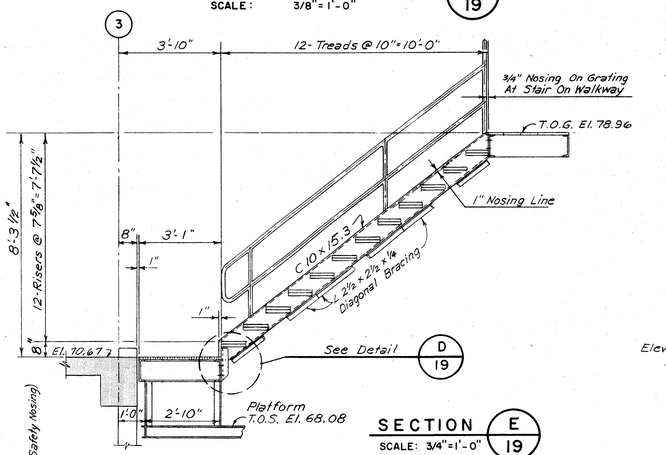

SECTION — E 19
SCALE: 3/4" = 1'-0"

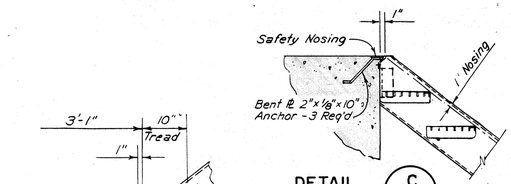

DETAIL — C 19
SCALE: 3/4" = 1'-0"

DETAIL — D 19
SCALE: 3/4" = 1'-0"

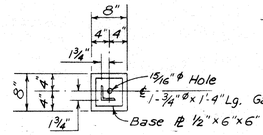

NOTE:
Galvanize all structure steel after fabrication, unless noted otherwise.

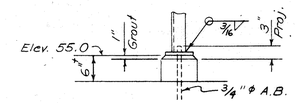

DETAIL — F 19
SCALE: 3/4" = 1'-0"
(2 - REQUIRED)

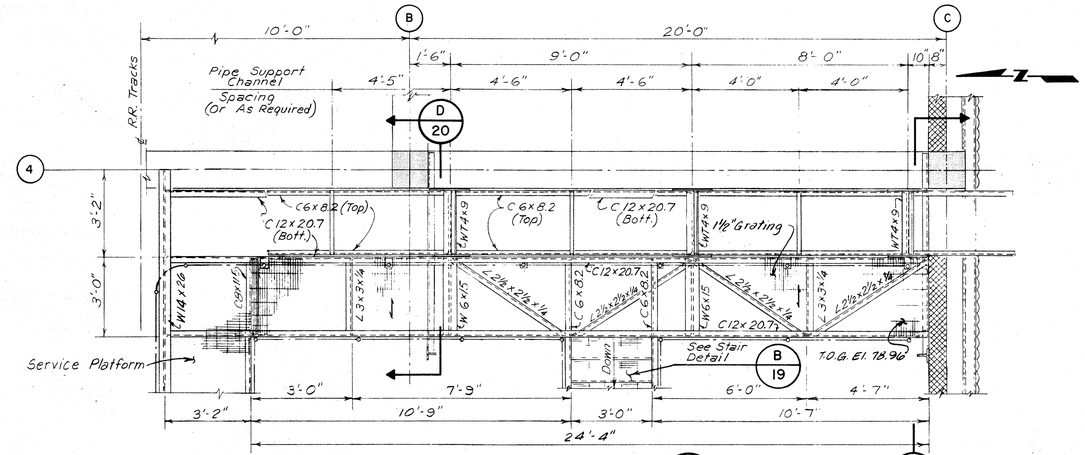

WALKWAY DETAIL — H 19
SCALE: 3/8" = 1'-0"

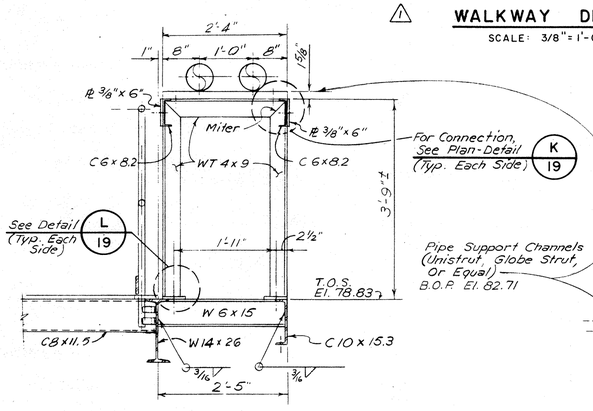

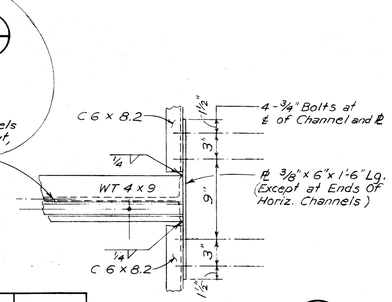

PLAN — DETAIL — K 19
SCALE: 1 1/2" = 1'-0"

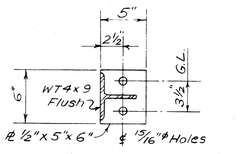

PLAN

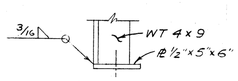

ELEVATION

DETAIL — L 19
SCALE: 1 1/2" = 1'-0"

SECTION — J 19
SCALE: 3/4" = 1'-0"

NO.	DATE	REVISION	APPROVED BINKLEY & HOLMES	APPROVED CITY OF HOUSTON
1	Jan '82	Revised Structural Platform for Hopper Car Loading		

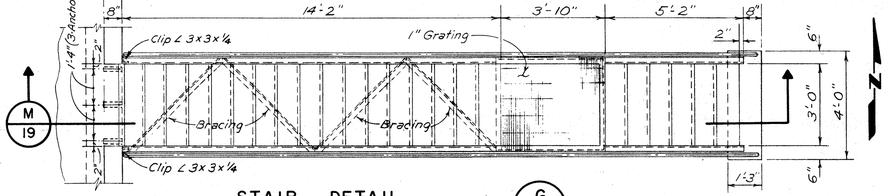

STAIR DETAIL — G 19
SCALE: 3/8" = 1'-0"

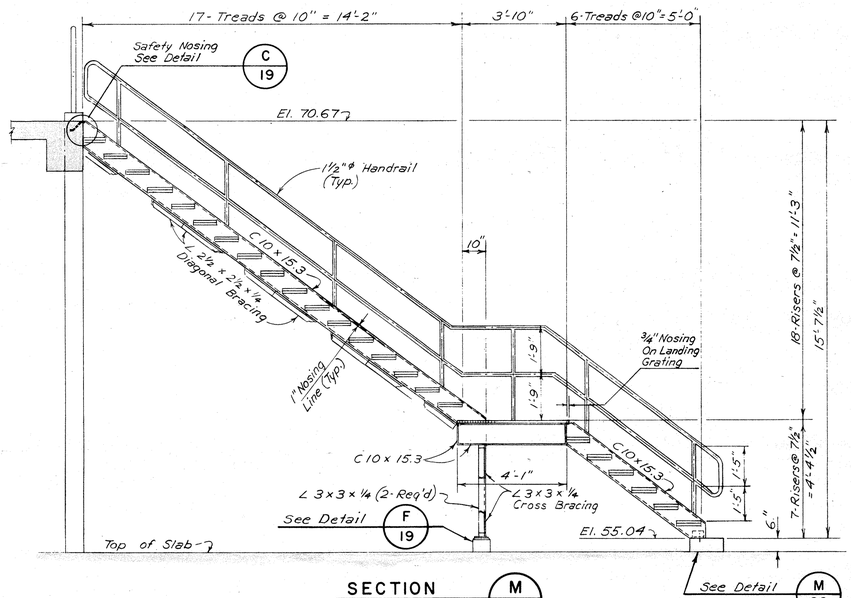

SECTION — M 19
SCALE: 3/8" = 1'-0"

JOB NO. 3304-DS-2

CITY OF HOUSTON
DEPARTMENT OF PUBLIC WORKS

ALMEDA SIMS
SLUDGE DISPOSAL PLANT
PNEUMATIC CONVEYING, STORAGE AND LOADING FACILITIES

LOADING FACILITIES WALKWAY AND STAIR DETAILS

RECOMMENDED FOR APPROVAL:
Kenneth Rindsey
BINKLEY & HOLMES, INC. CONSULTING ENGINEERS

STATE OF TEXAS — JOSEPH C. LANDA — 42778 — REGISTERED PROFESSIONAL ENGINEER

STATE OF TEXAS — KENNETH LINDSEY — 31158 — REGISTERED PROFESSIONAL ENGINEER

APPROVED:

WASTEWATER — W. W. RECORDS MICROFILMED — WATER — DATE 7-21-83

PAVING — CONSTRUCTION

STORM SEWER — ASST. DIRECTOR

DIRECTOR

DESIGNED BY:	J.L.R.	SCALE:	AS SHOWN
DRAWN BY:	G.A.S.	DATE:	APRIL 1980
CHECKED BY:	K.R.L.	DRAWING NO.	26709
SHEET		SHEET NO.	19 OF 51

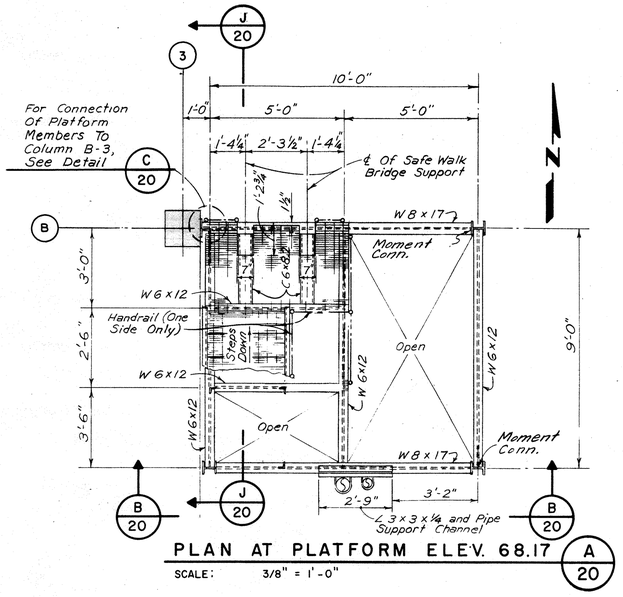

PLAN AT PLATFORM ELEV. 68.17 — A 20

SCALE: 3/8" = 1'-0"

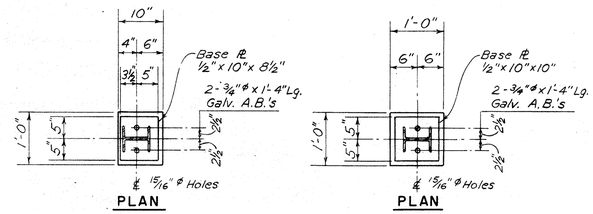

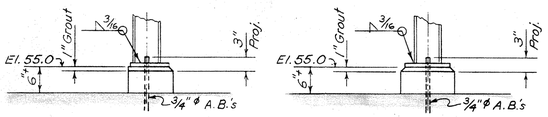

COLUMN SUPPORT DETAILS — E 20

SCALE: 3/4" = 1'-0"

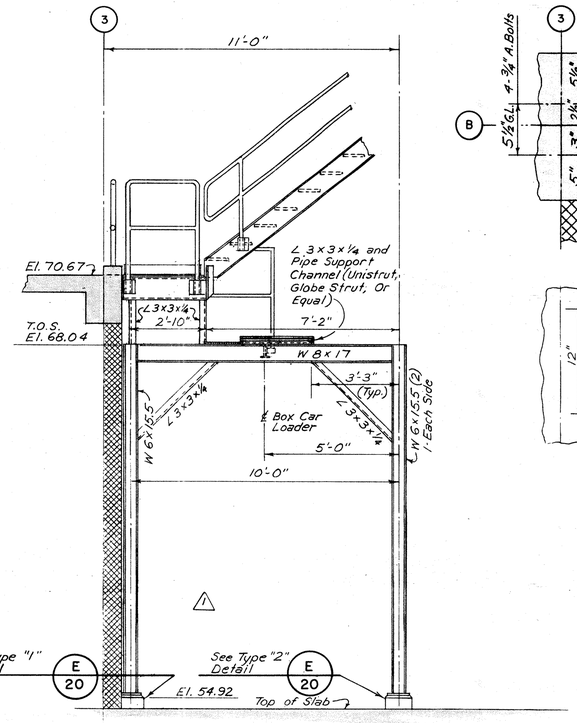

ELEVATION — B 20

SCALE: 3/8" = 1'-0"

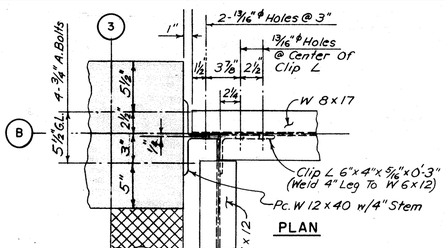

DETAIL — C 20

SCALE: 1 1/2" = 1'-0"

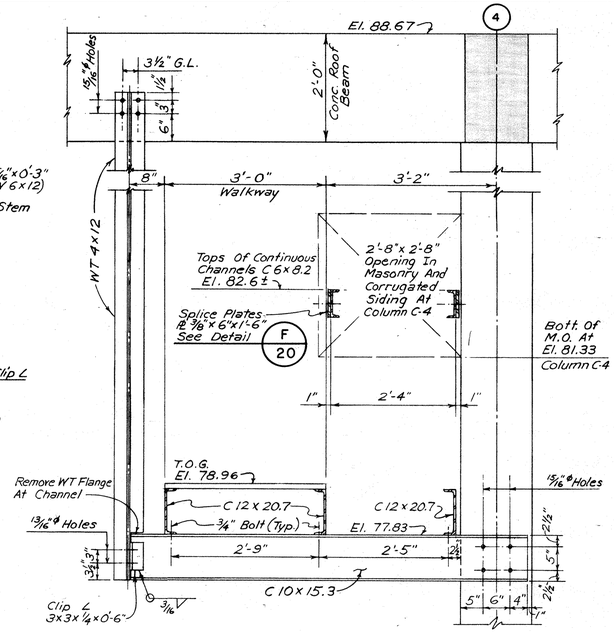

SECTION — D D' 20 20

SCALE: 3/4"= 1'-0" (SECTION D' OPP. HAND)

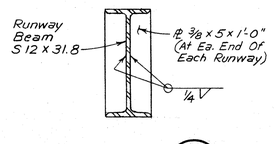

DETAIL — F 20

SCALE: 1 1/2"=1'-0"

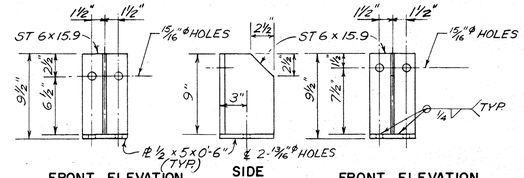

DETAIL - CRANE RUNWAY-BEAM SUPPORTS — G 20

SCALE: 1 1/2" = 1'-0"

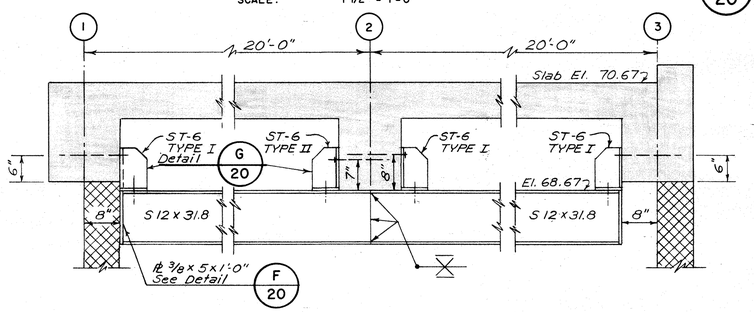

DETAIL - CRANE RUNWAY BEAM — H 20

SCALE: 3/4" = 1'-0" (2- REQUIRED)

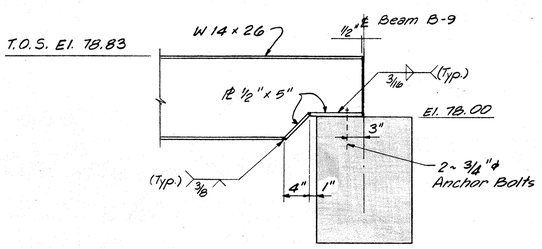

TYPICAL SECTION — M 20

SCALE: 1" = 1'-0"

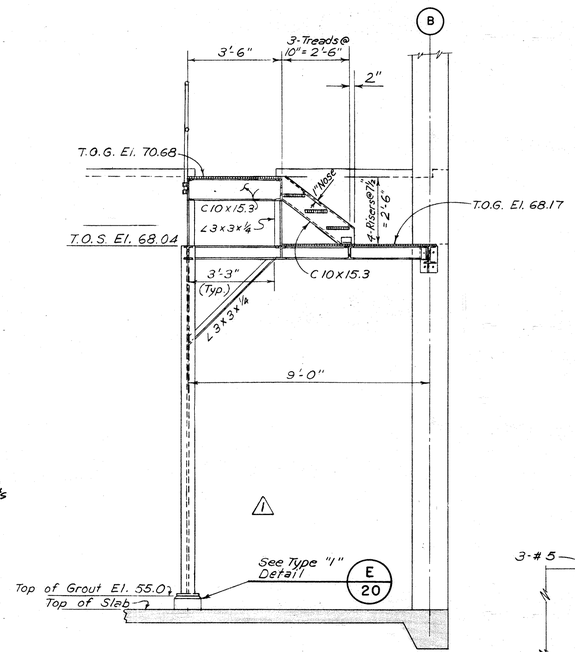

SECTION — J 20

SCALE: 3/8"= 1'-0"

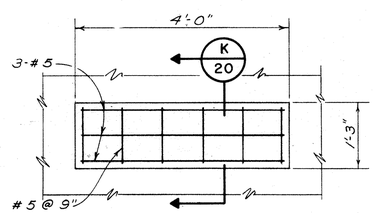

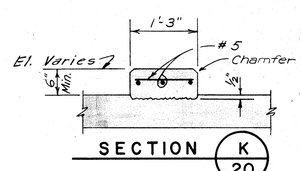

SECTION — K 20

TYPICAL STAIR FOOTING DETAIL — L 20

SCALE: 3/4" = 1'-0"

W. W. RECORDS MICROFILM DATE 7-21-83

NOTES:

1. Galvanize all Structure Steel after fabrication, unless noted otherwise.

NO.	DATE	REVISION	APPROVED BINKLEY & HOLMES	APPROVED CITY OF HOUSTON
1	Jan. '82	Deleted Box Car Loading		

JOB NO. 3304-DS-2

CITY OF HOUSTON
DEPARTMENT OF PUBLIC WORKS

ALMEDA SIMS
SLUDGE DISPOSAL PLANT
PNEUMATIC CONVEYING, STORAGE AND LOADING FACILITIES

LOADING FACILITIES
PLATFORMS AND
MISCELLANEOUS DETAILS

RECOMMENDED FOR APPROVAL:
Kenneth R. Binkley
BINKLEY & HOLMES, INC. CONSULTING ENGINEERS

STATE OF TEXAS — KENNETH R. BANDA — 42921 — REGISTERED PROFESSIONAL ENGINEER

STATE OF TEXAS — KENNETH W. LINDSEY — 31158 — REGISTERED PROFESSIONAL ENGINEER

APPROVED:
WASTEWATER
WATER
STORM SEWER
ASST. DIRECTOR
PAVING
CONSTRUCTION
DIRECTOR

DESIGNED BY: J.L.R. SCALE: AS SHOWN
DRAWN BY: G.A.S. DATE: APRIL 1980
CHECKED BY: K.R.L. DRAWING NO. 26709
SHEET SHEET NO. 20 OF 51

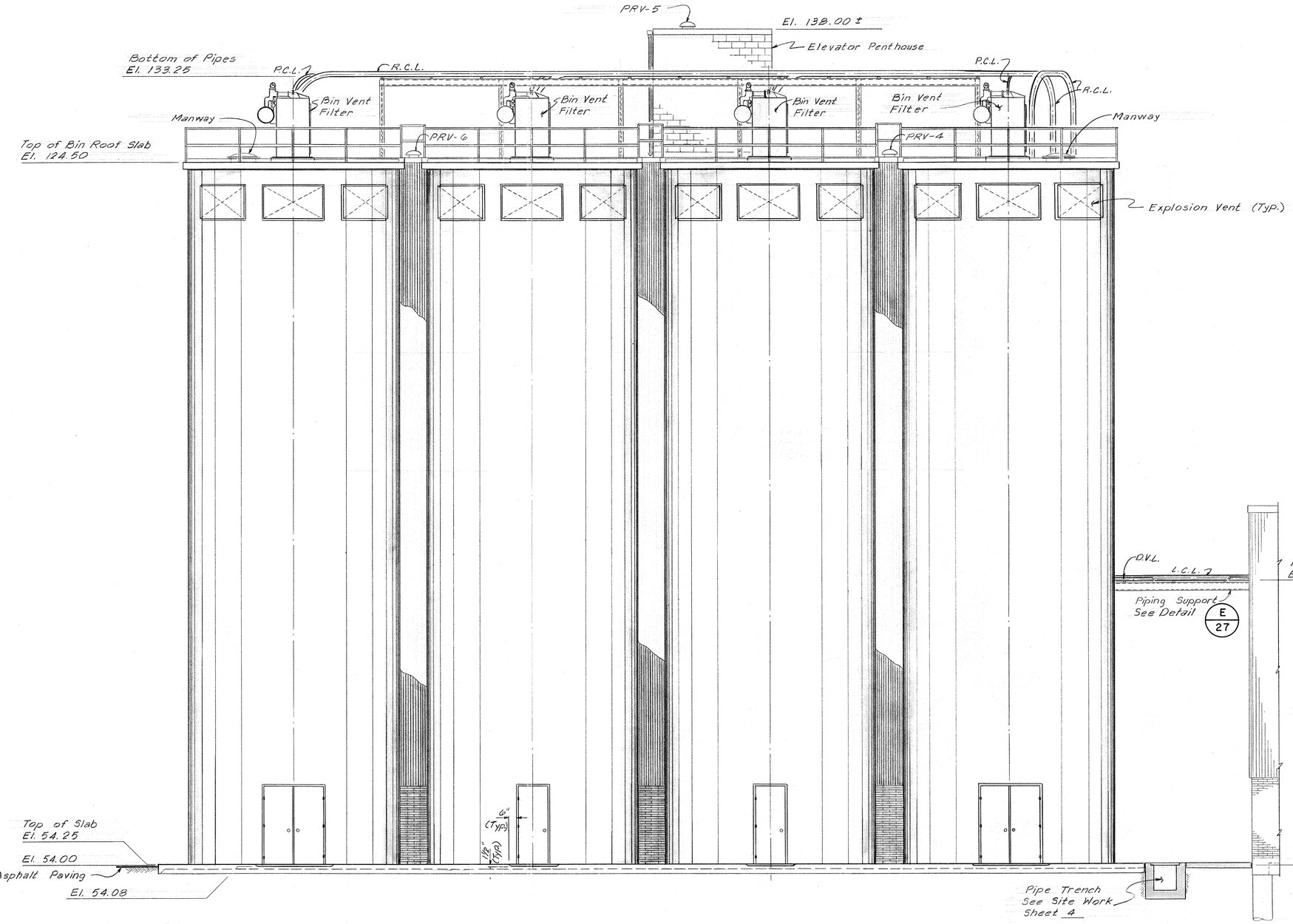

EAST ELEVATION A/21

LEGEND

M.C.L. Mixer Conveying Line

P.C.L. Production Conveying Line

L.C.L. Loading Conveying Line

R.C.L. Recirculation Conveying Line

D.V.L. Dust Vent Line

C.A.L. Conveying Air Line

F.A.L. Fluidizing Air Line

I.A.L. Instrument Air Line

NOTES:

1. See Door Schedule on Sheet No. 32 for additional information on Doors.
2. Refer to Plumbing Isometric on Sheet No. 36 for information to route air and water lines.

JOB NO. 3304-DS-2

CITY OF HOUSTON
DEPARTMENT OF PUBLIC WORKS

ALMEDA SIMS
SLUDGE DISPOSAL PLANT
PNEUMATIC CONVEYING, STORAGE AND LOADING FACILITIES

STORAGE FACILITIES
EAST ELEVATION

RECOMMENDED FOR APPROVAL:
Kenneth R. Lindsey
BINKLEY & HOLMES, INC. CONSULTING ENGINEERS

STATE OF TEXAS — JOSEPH E. JANDA — 42921 — REGISTERED PROFESSIONAL ENGINEER

STATE OF TEXAS — KENNETH R. LINDSEY — 31158 — REGISTERED PROFESSIONAL ENGINEER

APPROVED:

Walter Williams
WASTEWATER

PAVING
Jerry Perkins
CONSTRUCTION

WATER

STORM SEWER
ASST. DIRECTOR

Jimmie Schindewolf
DIRECTOR

DESIGNED BY: J.A.J. SCALE: 3/16"=1'-0"
DRAWN BY: B.J.L. DATE: APRIL 1980
CHECKED BY: K.R.L. DRAWING NO. 26709
SHEET SHEET NO. 21 OF 51

W. W. RECORDS MICROFILM DATE 7-21-83

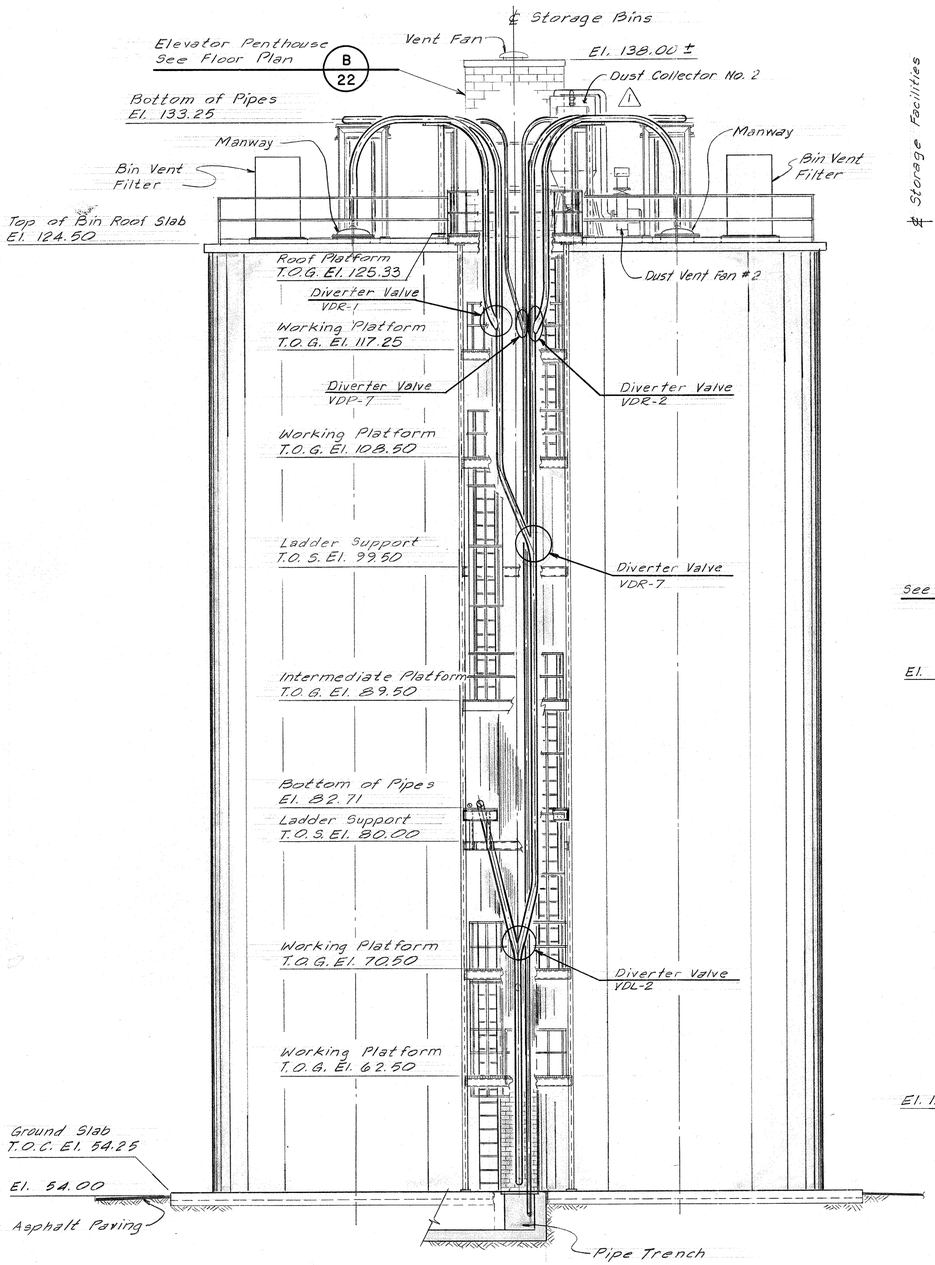

NORTH ELEVATION (A/22)
SCALE: 3/16" = 1'-0"

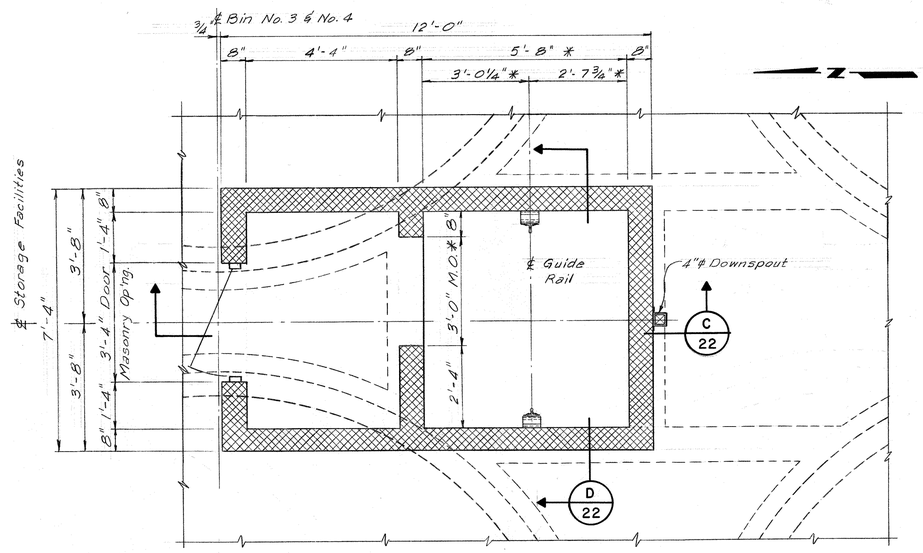

PENTHOUSE FLOOR PLAN (B/22)
SCALE: 1/2" = 1'-0"

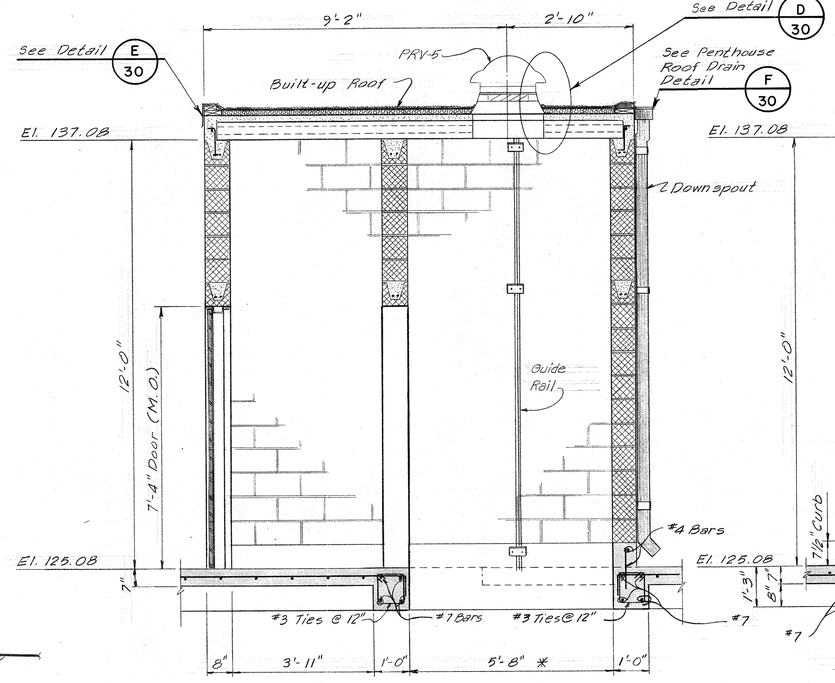

SECTION C/22
SCALE: 1/2" = 1'-0"

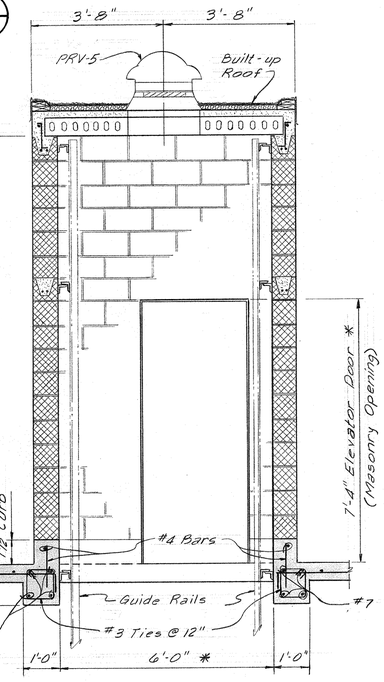

SECTION D/22
SCALE: 1/2" = 1'-0"

NOTE:
* Dimensions for Elevator Opening as required by Elevator Manufacturer.

W. W. RECORDS MICROFILM DATE 7-21-83

NO.	DATE	REVISION	APPROVED BINKLEY & HOLMES	APPROVED CITY OF HOUSTON
1	Jan. '82	Added Dust Collector No. 2		

JOB NO. 3304-DS-2

CITY OF HOUSTON
DEPARTMENT OF PUBLIC WORKS

ALMEDA SIMS
SLUDGE DISPOSAL PLANT
PNEUMATIC CONVEYING, STORAGE AND LOADING FACILITIES

STORAGE FACILITIES NORTH ELEVATION AND PENTHOUSE PLAN AND SECTIONS

RECOMMENDED FOR APPROVAL:
BINKLEY & HOLMES, INC. CONSULTING ENGINEERS

STATE OF TEXAS — JOSEPH L. JANDA — 22921 — REGISTERED PROFESSIONAL ENGINEER
STATE OF TEXAS — KENNETH R. LINDSEY — 51158 — REGISTERED PROFESSIONAL ENGINEER

APPROVED:
WASTEWATER
PAVING
WATER
CONSTRUCTION
STORM SEWER
ASST. DIRECTOR
DIRECTOR

DESIGNED BY: J.A.J. & J.L.R. SCALE: AS SHOWN
DRAWN BY: B.J.L. DATE: APRIL, 1980
CHECKED BY: K.R.L. DRAWING NO. 26709
SHEET SHEET NO. 22 OF 51

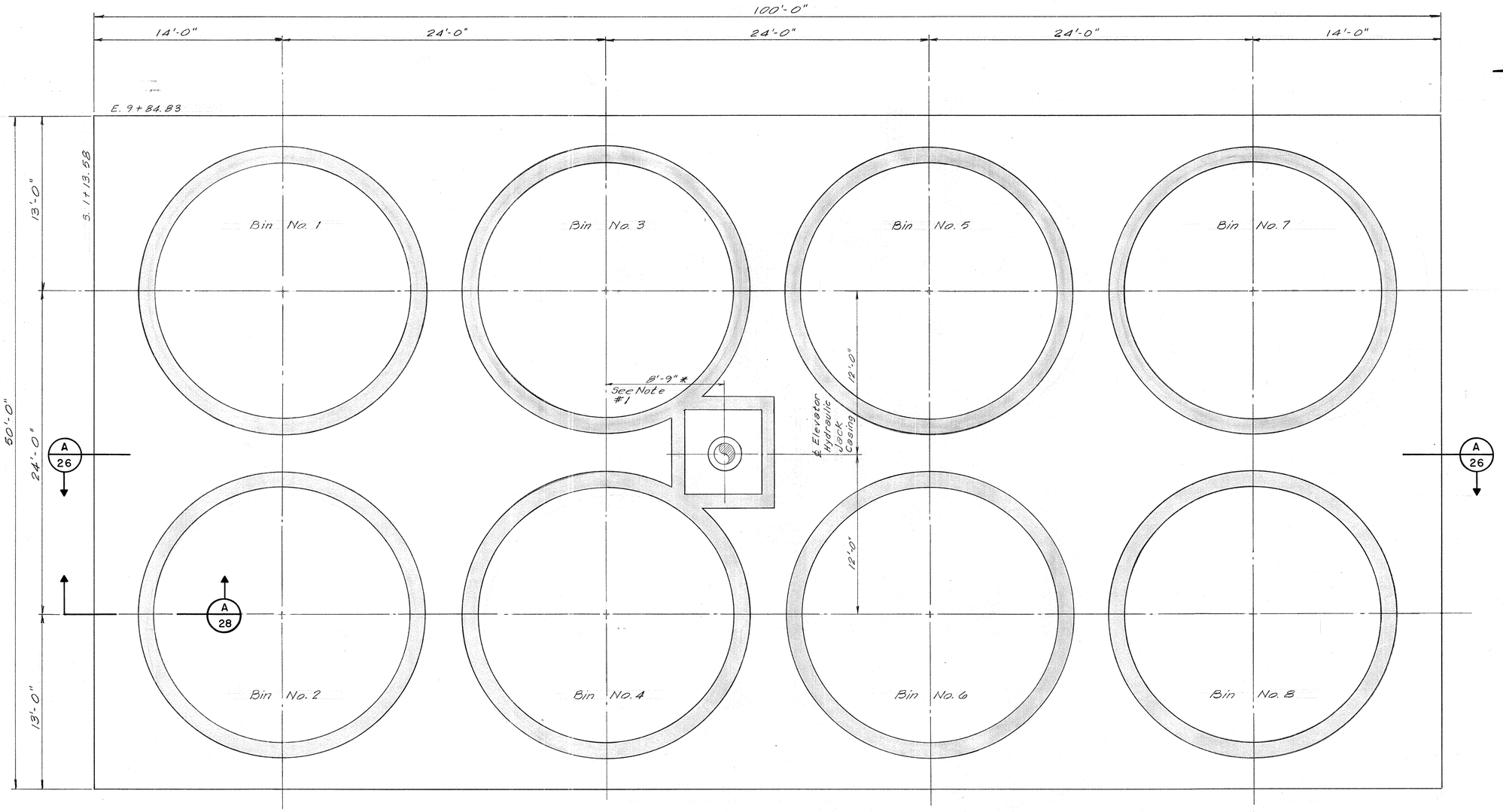

NOTE:
1. * Location of Jack Casing as required by Elevator Manufacturer.

FOUNDATION PLAN AT ELEVATION 48.50 (A/23)

SCALE: 1/4" = 1'-0"

W. W. RECORDS
MICROFILM
DATE 7-21-83

JOB NO. 3304-DS-2

CITY OF HOUSTON
DEPARTMENT OF PUBLIC WORKS

ALMEDA SIMS
SLUDGE DISPOSAL PLANT
PNEUMATIC CONVEYING, STORAGE AND LOADING FACILITIES

STORAGE FACILITIES FOUNDATION PLAN

RECOMMENDED FOR APPROVAL:
Kenneth R. Lindsey
BINKLEY & HOLMES, INC. CONSULTING ENGINEERS

STATE OF TEXAS — JOSEPH M. MANDA — 32921 — REGISTERED PROFESSIONAL ENGINEER

STATE OF TEXAS — KENNETH R. LINDSEY — 51158 — REGISTERED PROFESSIONAL ENGINEER

APPROVED:

WASTEWATER — Walter Williams

WATER

PAVING CONSTRUCTION — Jerry Dirkin

STORM SEWER ASST. DIRECTOR

DIRECTOR — Jimmie Schindler

DESIGNED BY: J.L.R. SCALE: AS SHOWN
DRAWN BY: B.J.L. DATE: APRIL 1980
CHECKED BY: K.R.L. DRAWING NO. 26709
SHEET SHEET NO. 23 OF 51

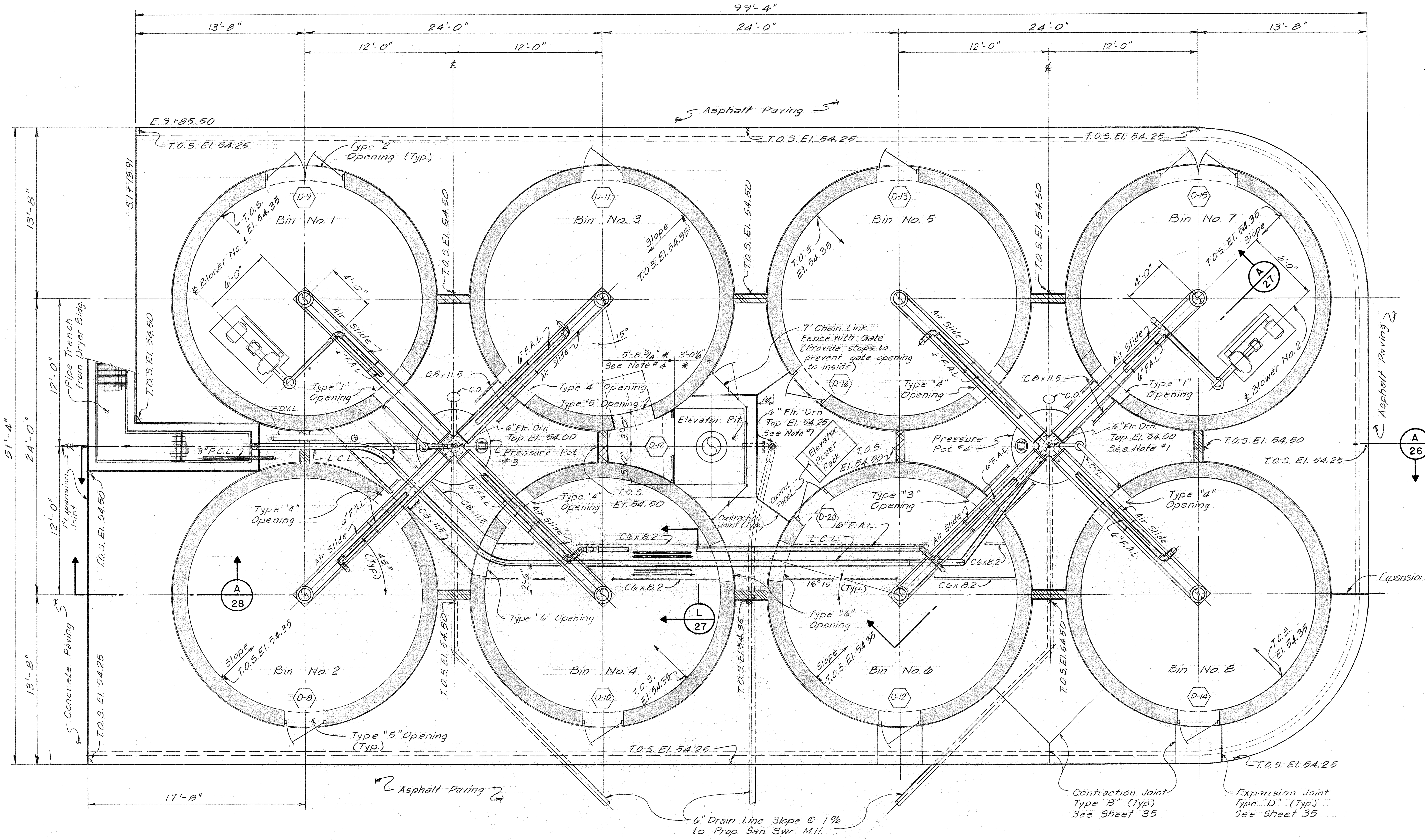

NOTES:

1. Floor Drain shall be Josam #32004, Zurn or Equal.
2. "P" Traps shall be Josam #1950, Zurn or Equal.
3. The Contractor may use Expansion Anchors for Pipe Support below El. 85.50
4. * Location of Jack Casing as required by Elevator Manufacturer.
5. Contraction Joints for Concrete Pavement Area Between Storage Bins shall be in Line with Air Slides.

GROUND FLOOR PLAN AT ELEVATION 54.50 (A/24)

SCALE: 1/4" = 1'-0"

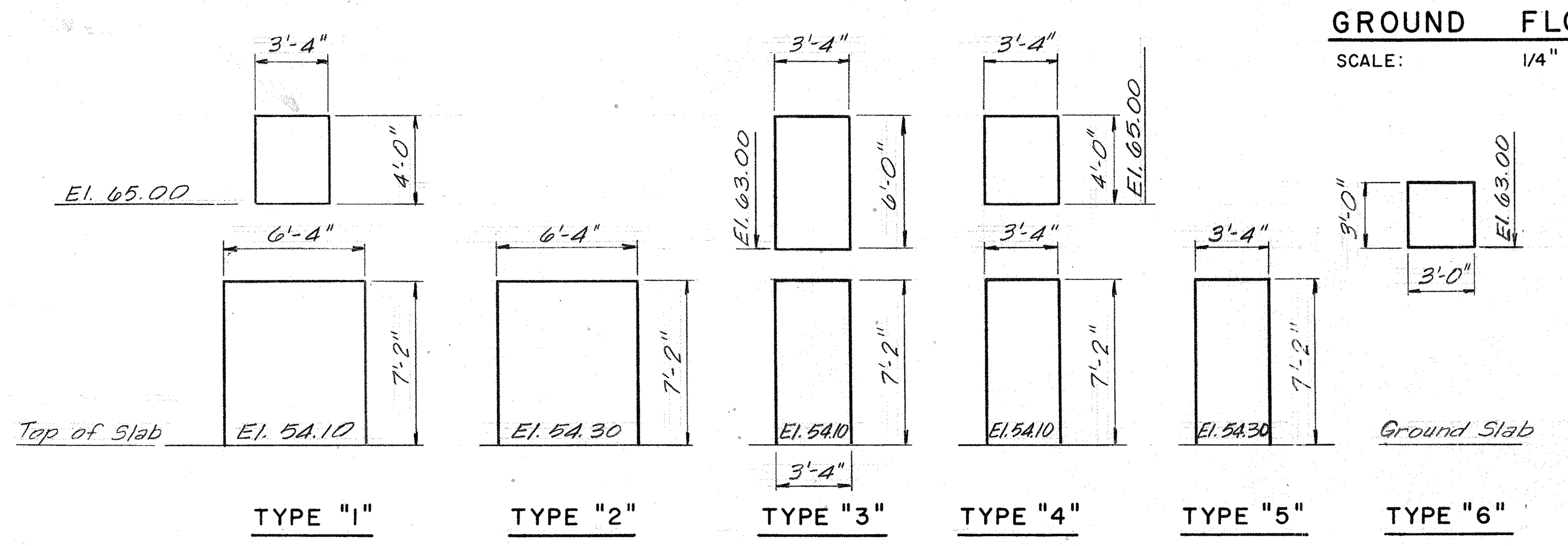

OPENING DETAILS (B/24)

SCALE: 3/16" = 1'-0"

STORAGE BIN WALLS OPENING SCHEDULE

BIN NO.	OPENING TYPES	DUST VENT LINE		REMARKS
1	Type "1", Type "2" Type "7"	El. 122.00		Type "2" Opening for Door D-9
2	Type "4", Type "5" Type "7"			Type "5" Opening for Door D-8
3	Type "4", 2-Type "5", Type "7"			Type "5" Opngs. for Door D-11 @ El. 54.10 and Elevator Entrance @ El. 55.08
4	Type "4", Type "5", Type "6", Type "7"			Type "5" Opening for Door D-10
5	Type "4", 2-Type "5", Type "7"			Type "5" Opening for Doors D-13 & D-16
6	Type "3", Type "5" Type "6", Type "7"			Type "5" Opening for Door D-12
7	Type "1", Type "2" Type "7"			Type "2" Opening for Doors D-15 & D-20
8	Type "4", Type "5" Type "7"	El. 122.00		Type "5" Opening for Door D-14

* See Location Plan (D/28) for Orientation of Level Sensor and Explosion Vent Openings

W. W. RECORDS MICROFILM DATE 7-21-83

JOB NO. 3304-DS-2

CITY OF HOUSTON
DEPARTMENT OF PUBLIC WORKS

ALMEDA SIMS SLUDGE DISPOSAL PLANT
PNEUMATIC CONVEYING, STORAGE AND LOADING FACILITIES

STORAGE FACILITIES GROUND FLOOR PLAN

RECOMMENDED FOR APPROVAL:
Kenneth R. Lindsey
BINKLEY & HOLMES, INC. CONSULTING ENGINEERS

APPROVED:
Walter Williams — WASTEWATER
PAVING
WATER
Jerry Dinkins — CONSTRUCTION
STORM SEWER
ASST. DIRECTOR
DIRECTOR

DESIGNED BY: J.A.J. & J.L.R. SCALE: AS SHOWN
DRAWN BY: B.J.L. DATE: APRIL 1980
CHECKED BY: K.R.L. DRAWING NO. 26709
SHEET ______ SHEET NO. 24 OF 51

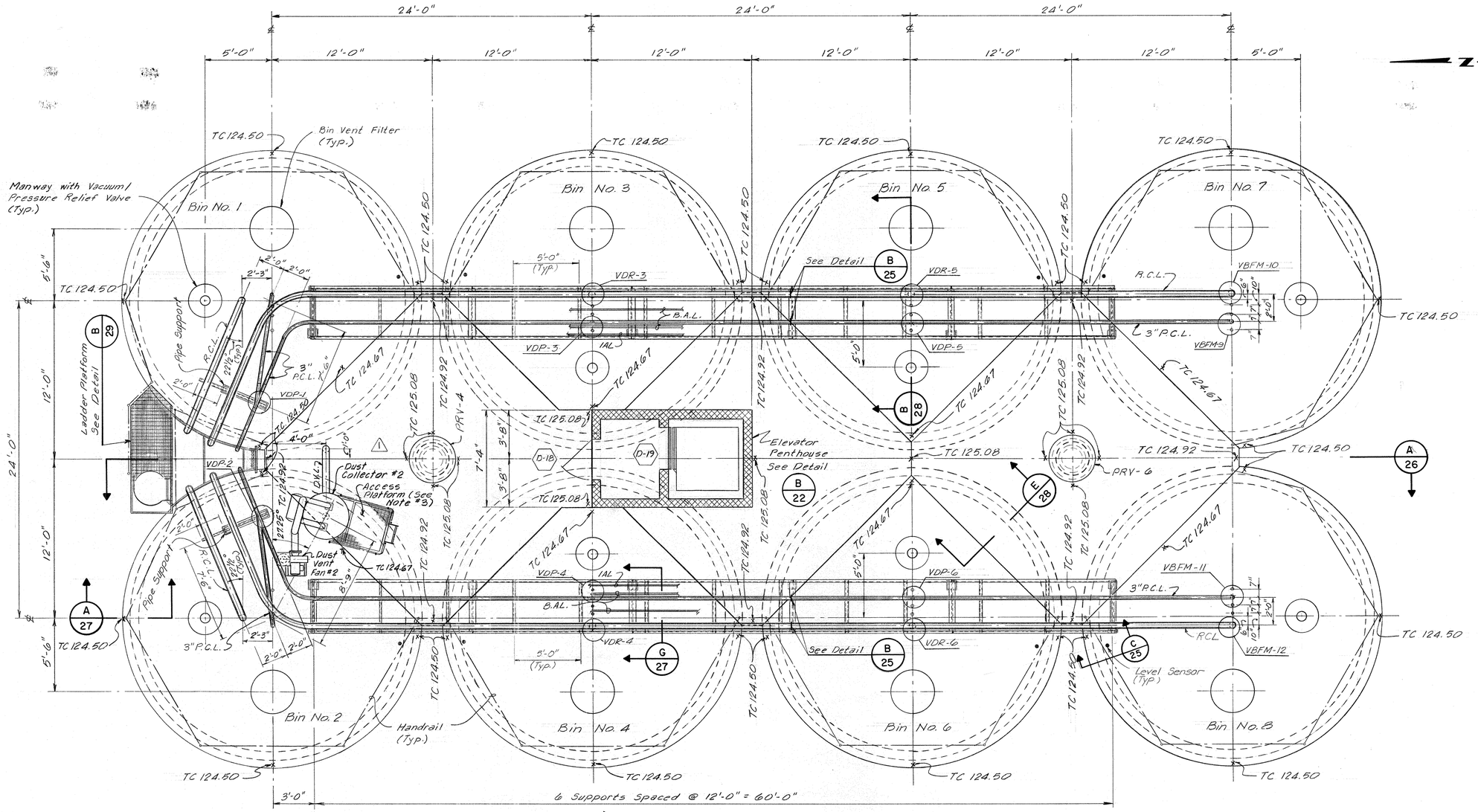

ROOF PLAN AT ELEVATION 125.00 — A/25

SCALE: 1/4" = 1'-0"

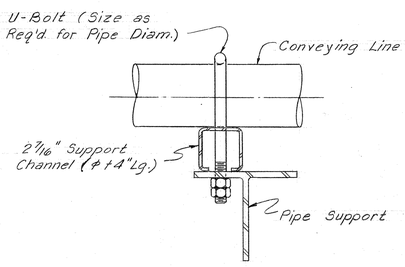

PIPE ANCHORING DETAIL — B/25

SCALE: 3" = 1'-0"
(Req'd. only where Detail's indicated)

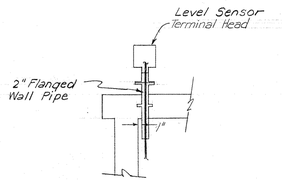

LEVEL SENSOR DETAIL — C/25

SCALE: 1/2"=1'-0"

NOTES:

1. X Marked on Roof Plan is to Indicate Spot Elevation of Top of Concrete Slab for Roof Drainage (X— TC ____)
2. Galvanize Structure Steel After Fabrication, Unless Noted Otherwise.
3. Platform shall be furnished by Equipment Manufacturer if Bag Filters are not accessable from floor.

JOB NO. 3304-DS-2

CITY OF HOUSTON
DEPARTMENT OF PUBLIC WORKS

ALMEDA SIMS
SLUDGE DISPOSAL PLANT
PNEUMATIC CONVEYING, STORAGE AND LOADING FACILITIES

STORAGE FACILITIES
ROOF PLAN

RECOMMENDED FOR APPROVAL:
Kenneth R. Lindsey
BINKLEY & HOLMES, INC. CONSULTING ENGINEERS

STATE OF TEXAS — KENNETH R. LINDSEY — 44736 — REGISTERED PROFESSIONAL ENGINEER

APPROVED:
WASTEWATER — Walter Williams
WATER
PAVING — Jerry Dinkins — CONSTRUCTION
STORM SEWER — ASST. DIRECTOR
DIRECTOR

NO.	DATE	REVISION	APPROVED BINKLEY & HOLMES	APPROVED CITY OF HOUSTON
1	Jan. '82	Added Dust Collector No. 2		

DESIGNED BY: J.A.J. & J.L.R. SCALE: AS SHOWN
DRAWN BY: B.J.L. DATE: APRIL, 1980
CHECKED BY: K.R.L. DRAWING NO. 26709
SHEET: SHEET NO. 25 OF 51

W. W. RECORDS MICROFILM DATE 7-21-83

NOTES:

1. Manways on Bin Hopper shall Face the West Exterior Wall for Bin No's. 2, 4, 6 & 8 and East Exterior Wall for Bin No's. 1, 3, 5 & 7.
2. Galvanize all Structure Steel after Fabrication, Unless Noted Otherwise.
3. Provide adjustable pipe roller supports with rollers on both sides of pipe on Production Conveying Line and Recirculation Conveying Line at Platform El. 125.25, Platform El. 89.50 and Platform El. 70.50.
4. Diverter Valves And Booster Air Stations Shall Be Located As Required And Shall Be Assessable From Ladder Platforms For Maintenance.

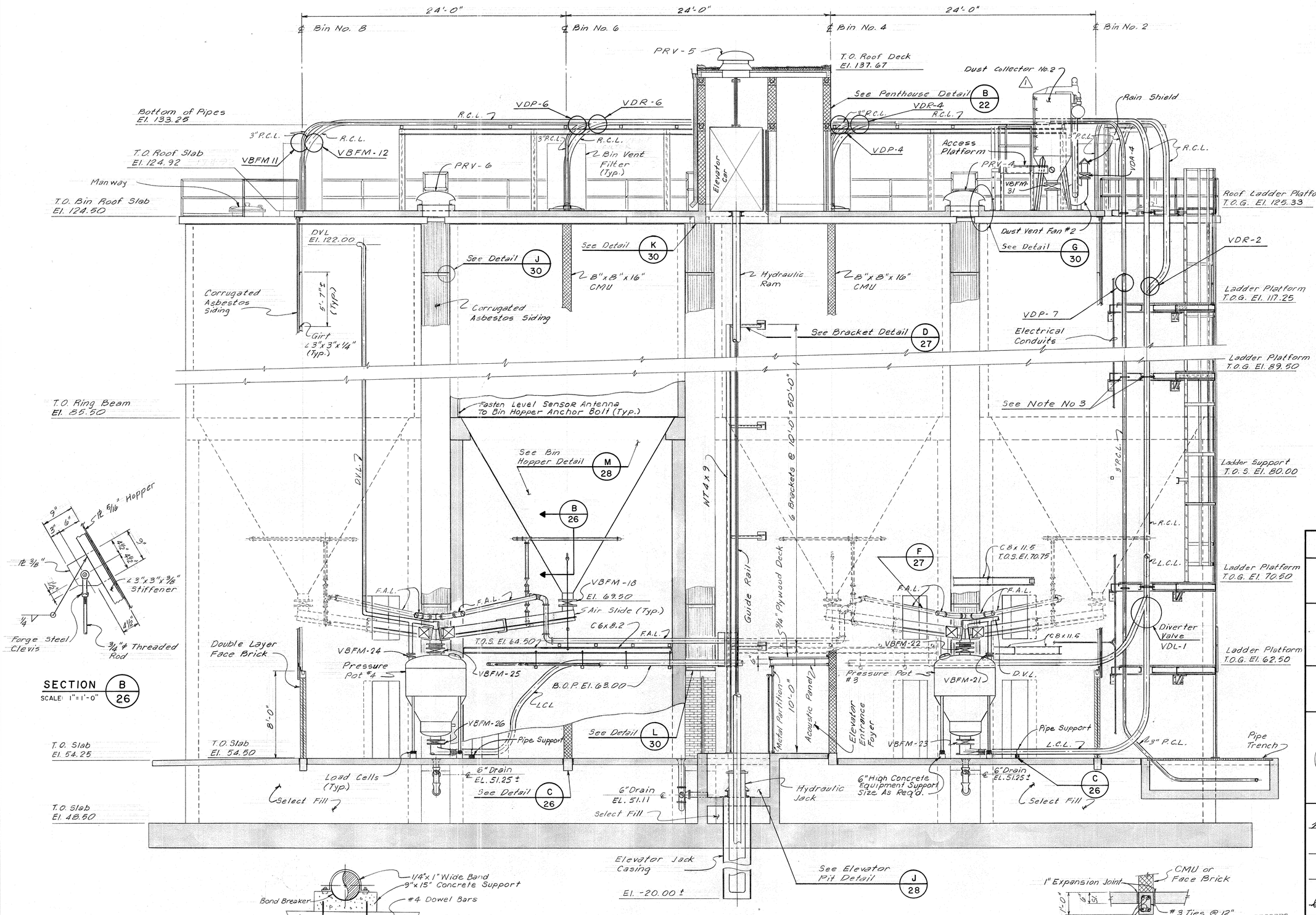

SECTION B 26
SCALE: 1"=1'-0"

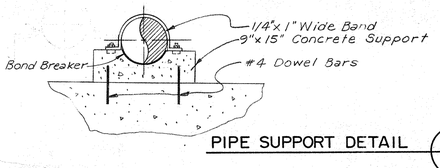

PIPE SUPPORT DETAIL C 26

SECTION A 26
SCALE: 1/4" = 1'-0"

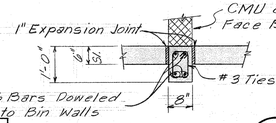

BEAM DETAIL D 26
SCALE: 1/2"=1'-0"

NO.	DATE	REVISION	APPROVED BINKLEY & HOLMES	APPROVED CITY OF HOUSTON
1	Jan. '82	Added Dust Collector No. 2		

JOB NO. 3304-DS-2

CITY OF HOUSTON
DEPARTMENT OF PUBLIC WORKS

ALMEDA SIMS
SLUDGE DISPOSAL PLANT
PNEUMATIC CONVEYING, STORAGE AND LOADING FACILITIES

STORAGE FACILITIES SECTION

RECOMMENDED FOR APPROVAL:
Kenneth Rhinkey
BINKLEY & HOLMES, INC. CONSULTING ENGINEERS

STATE OF FLORIDA — KENNETH RHINKEY — 4241 — REGISTERED PROFESSIONAL ENGINEER

STATE OF TEXAS — KENNETH LINDSEY — 51158 — REGISTERED PROFESSIONAL ENGINEER

APPROVED:

WASTEWATER — Walter Williams	PAVING — Jerry Perkins
WATER	CONSTRUCTION
STORM SEWER — John C. Stone	Jimmie Schindewolf
ASST. DIRECTOR	DIRECTOR

DESIGNED BY: J. A. J. — SCALE: 1/4" = 1'-0" U.N.
DRAWN BY: B. J. L. — DATE: APRIL 1980
CHECKED BY: K. R. L. — DRAWING NO. 26709
SHEET — SHEET NO. 26 OF 51

W. W. RECORDS MICROFILM DATE 7-21-83

NOTE :

1. Galvanize Structure Steel After Fabrication, Unless Noted Otherwise.

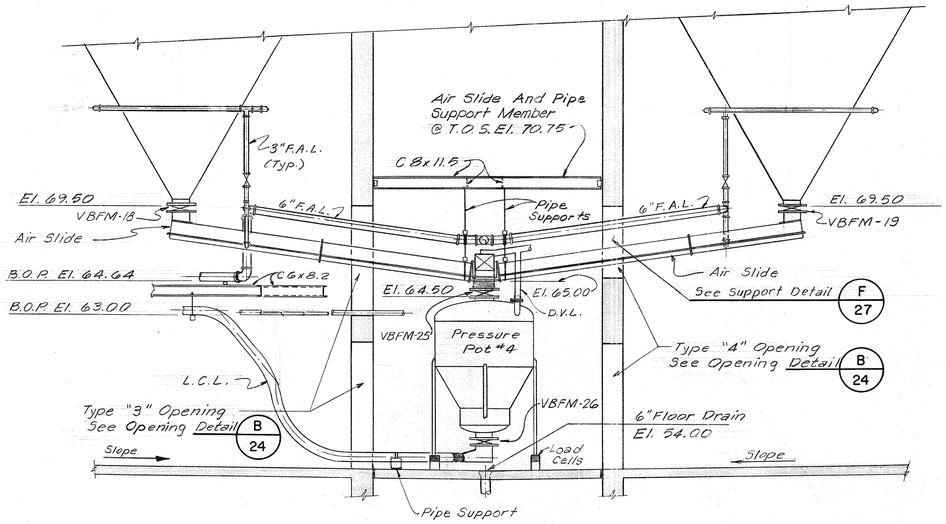

EQUIPMENT SECTION A 27

SCALE: 1/4" = 1'-0"

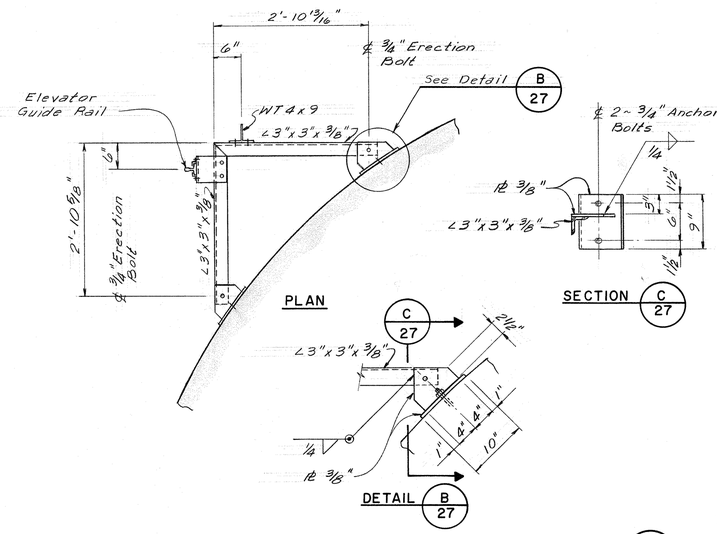

GUIDE RAIL SUPPORT BRACKET DETAIL D 27

SCALE: NONE

(12 - Req'd. ; 6 - As Shown and 6 - Opposite Hand)

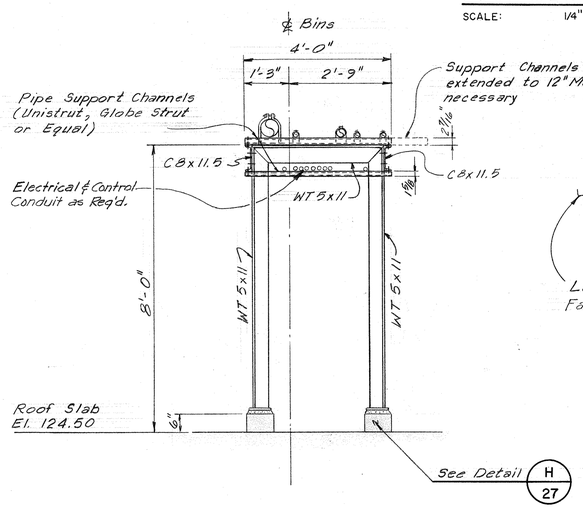

PIPE SUPPORT SECTION G 27

SCALE: 1/2" = 1'-0"

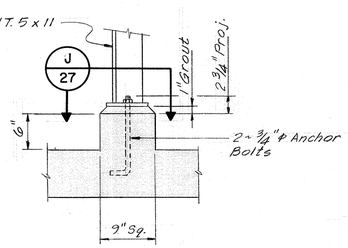

DETAIL H 27

SCALE: 1" = 1'-0"

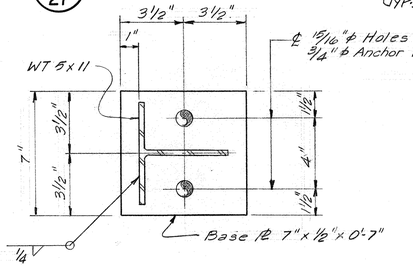

SECTION J 27

SCALE: 3" = 1'-0"

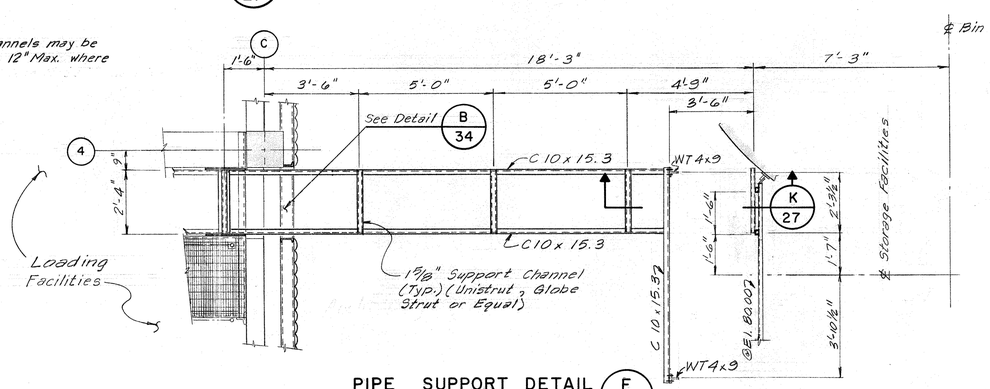

PIPE SUPPORT DETAIL E 27

SCALE: 3/8" = 1'-0"

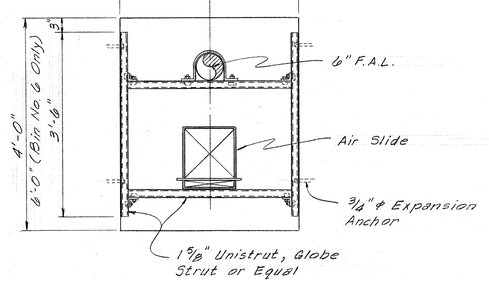

SUPPORT DETAIL F 27

SCALE: 3/4" = 1'-0"

(8 - Req'd. = Fluidizing Air Line and Air Slide Support for Upper Opening of Type "3" & "4")

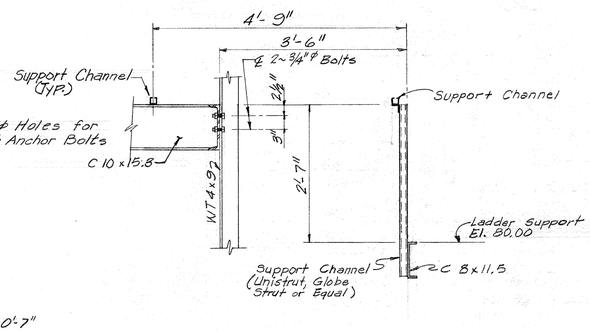

SECTION K 27

SCALE: 3/4" = 1'-0"

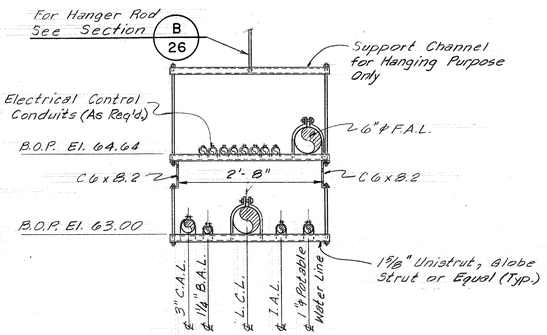

SECTION L 27

SCALE: 3/4" = 1'-0"

W. W. RECORDS MICROFILM DATE 7-21-83

JOB NO. 3304-DS-2

CITY OF HOUSTON
DEPARTMENT OF PUBLIC WORKS

ALMEDA SIMS SLUDGE DISPOSAL PLANT

PNEUMATIC CONVEYING, STORAGE AND LOADING FACILITIES

STORAGE FACILITIES MISCELLANEOUS PIPING AND STRUCTURAL DETAILS

RECOMMENDED FOR APPROVAL:

Kenneth R. Binkley

BINKLEY & HOLMES, INC. CONSULTING ENGINEERS

STATE OF TEXAS JOSEPH J. ZELLA 42171 REGISTERED PROFESSIONAL ENGINEER

STATE OF TEXAS KENNETH E. LINDSEY 31158 REGISTERED PROFESSIONAL ENGINEER

APPROVED:

Walter Williams — WASTEWATER

PAVING

WATER

Jerry Dunkins — CONSTRUCTION

STORM SEWER

ASST. DIRECTOR

Jimmie Schindewolf — DIRECTOR

DESIGNED BY J.A.J. & J.L.R. SCALE: AS SHOWN

DRAWN BY B.J.L. DATE: APRIL, 1980

CHECKED BY K.R.L. DRAWING NO. 26709

SHEET SHEET NO. 27 OF 51

NOTE:
1. Galvanize Structure Steel after Fabrication, Unless Noted Otherwise.
2. Fluidizing Air Pipe Opening Size And Location As Required By Pneumatic Conveying Manufacture.

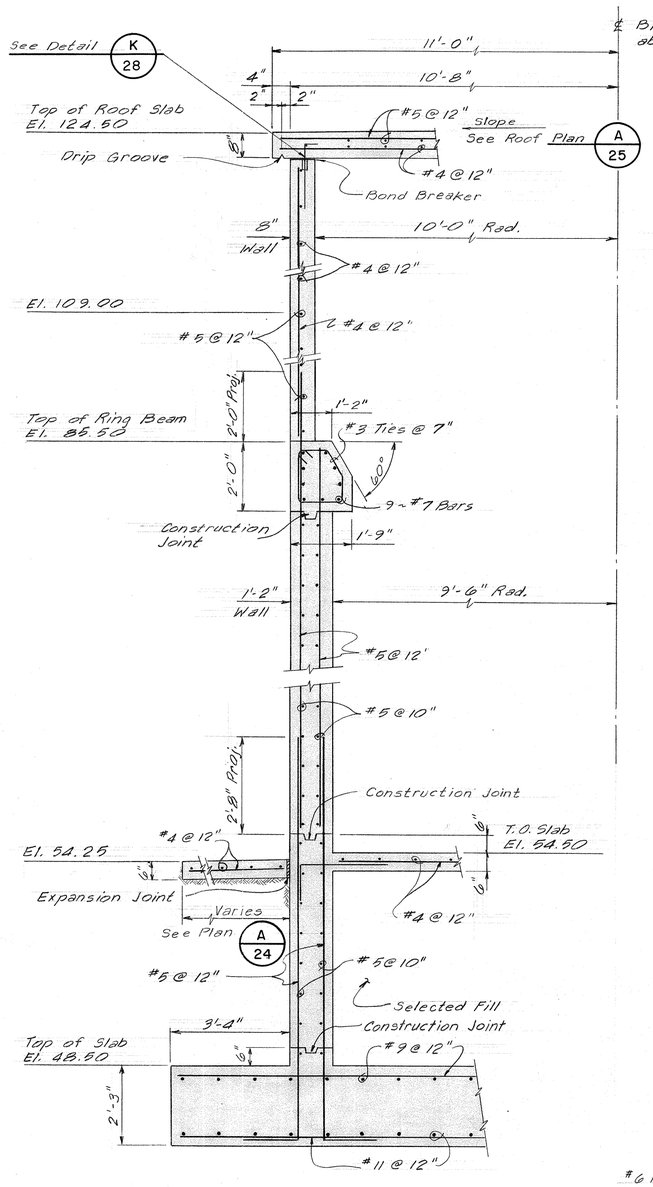

SECTION A 28
SCALE: 1/2" = 1'-0"

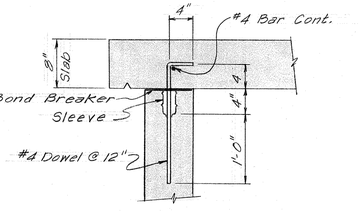

SLAB ANCHORING DETAIL K 28
SCALE: 1" = 1'-0"

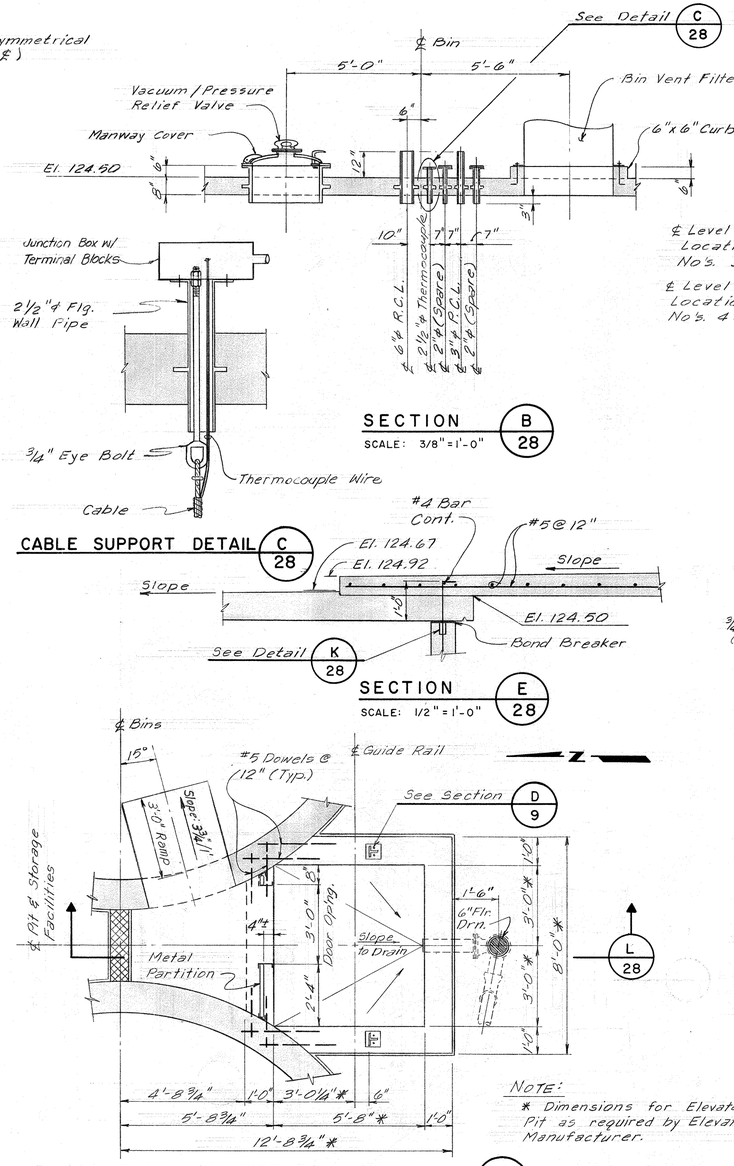

SECTION B 28
SCALE: 3/8" = 1'-0"

SECTION E 28
SCALE: 1/2" = 1'-0"

NOTE:
* Dimensions for Elevator Pit as required by Elevator Manufacturer.

PLAN - ELEVATOR PIT DETAIL J 28
SCALE: 3/8" = 1'-0"

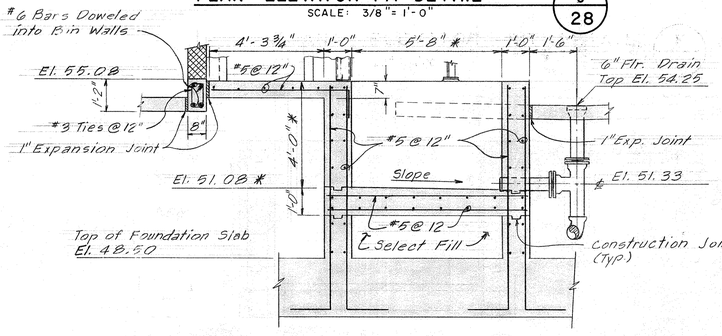

SECTION L 28
SCALE: 3/8" = 1'-0"

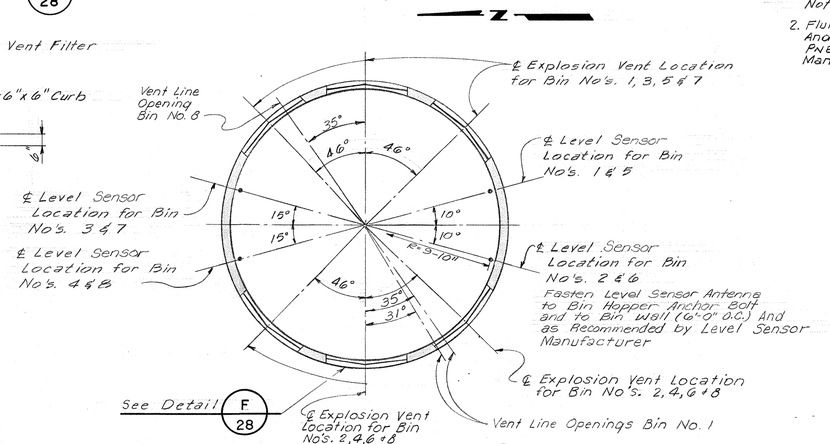

LOCATION PLAN D 28
SCALE: 3/16" = 1'-0"

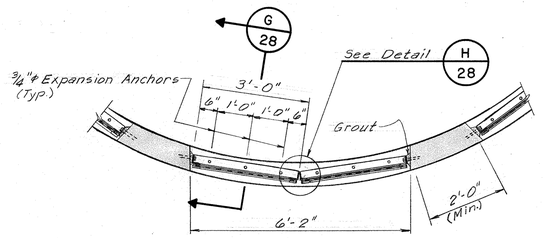

EXPLOSION VENT DETAIL F 28
SCALE: 1/2" = 1'-0"

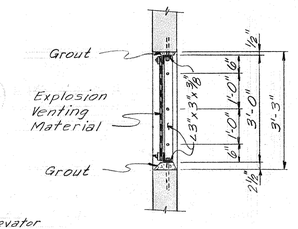

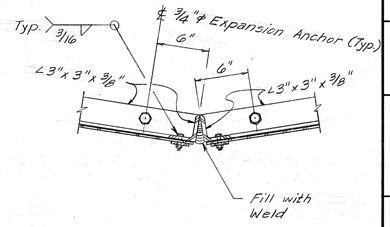

SECTION G 28
SCALE: 1/2" = 1'-0"

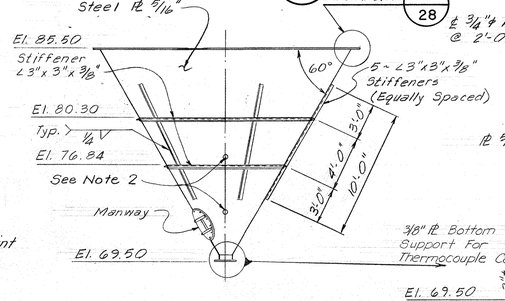

BIN HOPPER DETAIL M 28
SCALE: 3/16" = 1'-0"

DETAIL H 28
SCALE: 1 1/2"=1'-0"

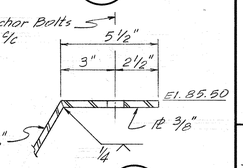

DETAIL N 28
SCALE: 3"=1'-0"

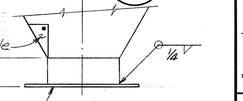

W. W. RECORDS MICROFILM DATE 7-21-83

JOB NO. 3304-DS-2

CITY OF HOUSTON
DEPARTMENT OF PUBLIC WORKS

ALMEDA SIMS SLUDGE DISPOSAL PLANT

PNEUMATIC CONVEYING, STORAGE AND LOADING FACILITIES

STORAGE FACILITIES MISCELLANEOUS STRUCTURAL SECTIONS AND DETAILS

RECOMMENDED FOR APPROVAL:
Kenneth R. Binkley
BINKLEY & HOLMES, INC. CONSULTING ENGINEERS

STATE OF TEXAS — JAMES X. JANDA — 42921 — REGISTERED PROFESSIONAL ENGINEER

STATE OF TEXAS — KENNETH R. LINDSEY — 31158 — REGISTERED PROFESSIONAL ENGINEER

APPROVED:

Walter Williams — WASTEWATER	PAVING
WATER	Jerry Jenkins — CONSTRUCTION
STORM SEWER	
ASST. DIRECTOR	DIRECTOR

DESIGNED BY: J.L.R. — SCALE: AS SHOWN
DRAWN BY: B.J.L. — DATE: APRIL 1980
CHECKED BY: K.R.L. — DRAWING NO. 26709
SHEET — SHEET NO. 28 OF 51

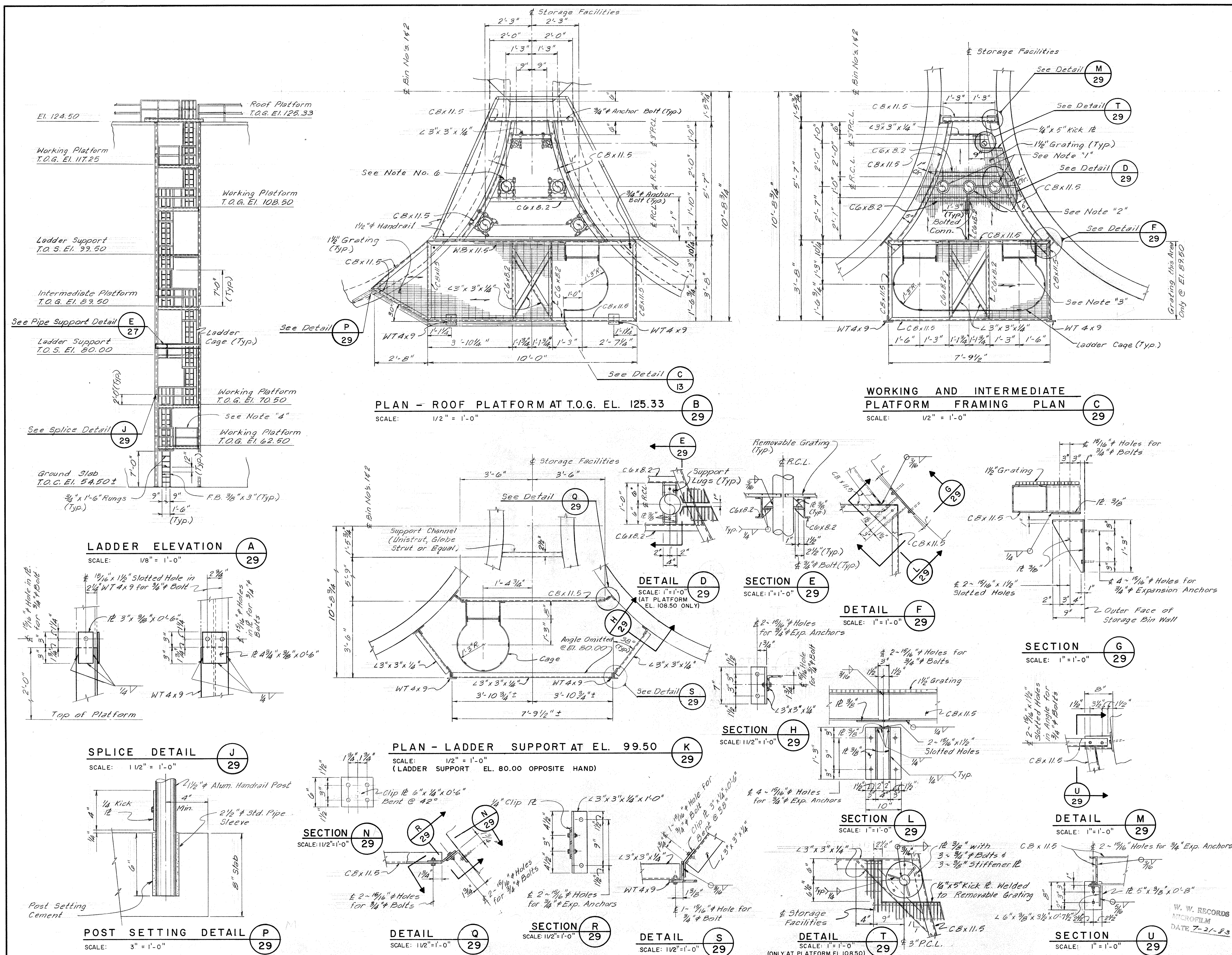

NOTES:

1. Pipe Openings As Shown For on Working Platforms @ El. 108.50 & El. 117.25 Only.
2. Pipe Opening As Shown For Working Platforms El. 62.50 & El. 70.50.
3. Ladder Locations For Working Platforms El. 62.50 & El. 117.25 Are As Shown On Ladder Elevation A-29
4. Place Handrails with Kick Plate on Working Platforms @ El. 62.50, El. 117.25 & Roof Platform @ El. 125.50.
5. Galvanize all Structure Steel after Fabrication, Unless Noted Otherwise.
6. Provide adjustable pipe roller supports with rollers on both sides of pipe on Production Conveying Line and Recirculation Conveying Line at Platform El. 125.25, Platform El. 89.50 and Platform El. 70.50.
7. Platform At El. 108.50 Shall Have 4 Ea. F-29 Type Support Brackets.

JOB NO. 3304-DS-2

CITY OF HOUSTON
DEPARTMENT OF PUBLIC WORKS

ALMEDA SIMS
SLUDGE DISPOSAL PLANT
PNEUMATIC CONVEYING, STORAGE AND LOADING FACILITIES

STORAGE FACILITIES
LADDER AND PLATFORM DETAILS

RECOMMENDED FOR APPROVAL:
BINKLEY & HOLMES, INC. CONSULTING ENGINEERS

APPROVED:

WASTEWATER	PAVING
WATER	CONSTRUCTION
STORM SEWER	
ASST. DIRECTOR	DIRECTOR

W. W. RECORDS MICROFILM DATE 7-21-83

DESIGNED BY: J.L.R.	SCALE: AS SHOWN
DRAWN BY: B.J.L.	DATE: APRIL, 1980
CHECKED BY: J.A.J.	DRAWING NO. 26709
SHEET	SHEET NO. 29 OF 51

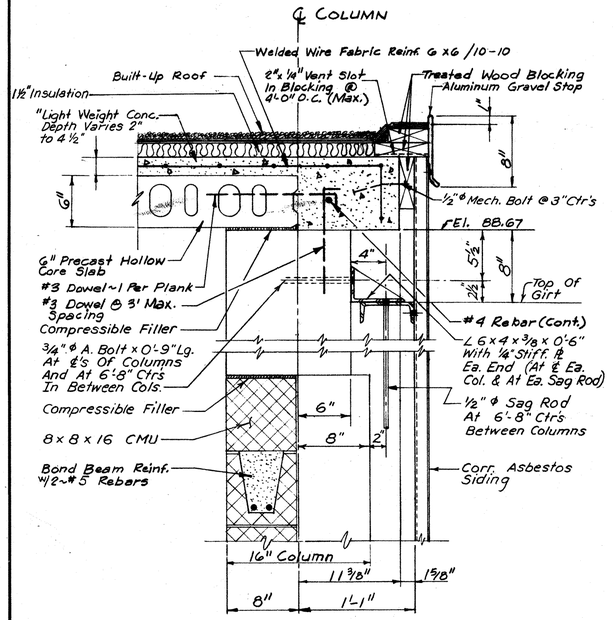

EAVE DETAIL A / 30

SCALE: 1 1/2" = 1'-0"

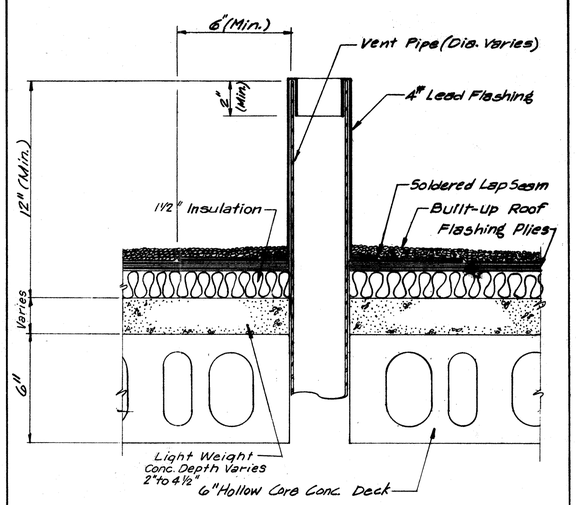

VENT PIPE DETAIL B / 30

SCALE: 3" = 1'-0"

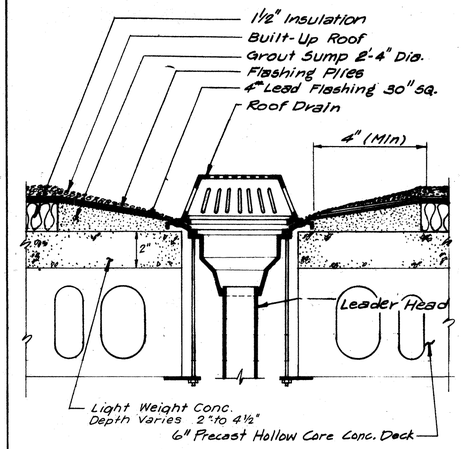

ROOF DRAIN DETAIL C / 30

SCALE: 3" = 1'-0"

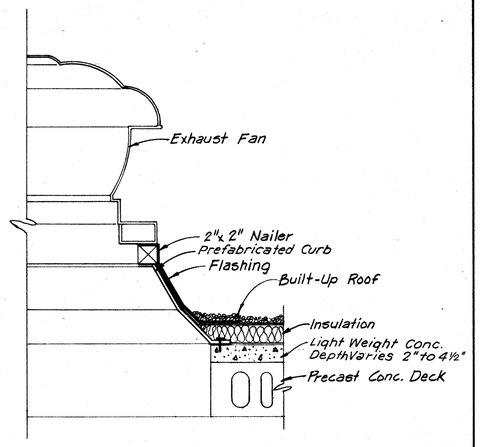

EXHAUST FAN MOUNTING DETAIL D / 30

SCALE: 1 1/2" = 1'-0"

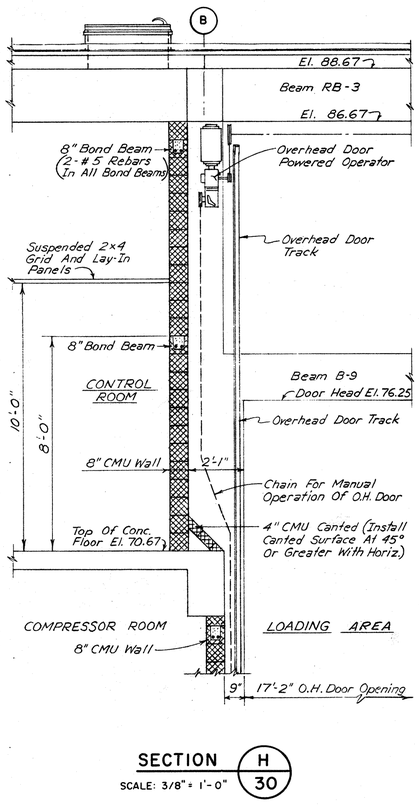

SECTION H / 30

SCALE: 3/8" = 1'-0"

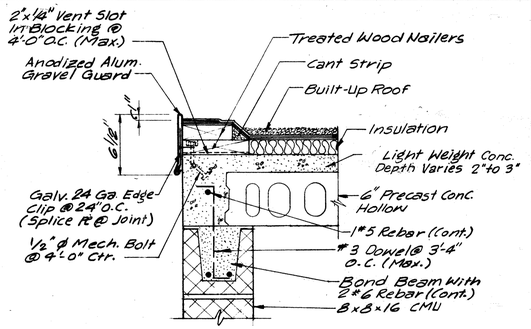

PENTHOUSE EAVE DETAIL E / 30

SCALE: 1 1/2" = 1'-0"

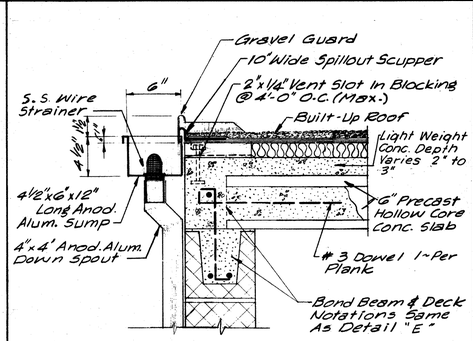

PENTHOUSE ROOF DRAIN DETAIL F / 30

SCALE: 1 1/2" = 1'-0"

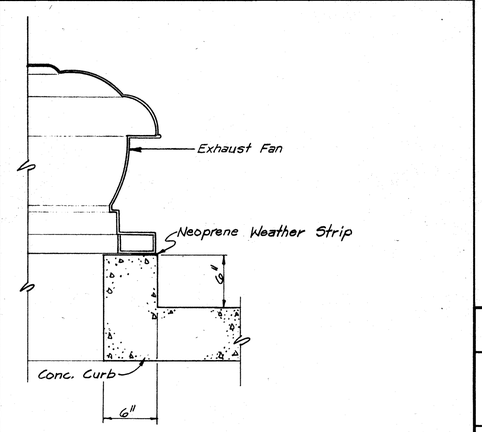

EXHAUST FAN AND CURB DETAIL G / 30

SCALE: 1 1/2" = 1'-0"

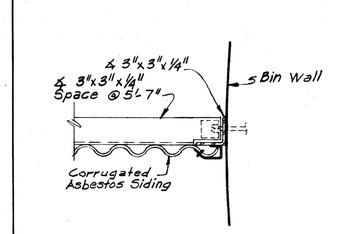

SIDING SUPPORT DETAIL J / 30

SCALE: 1 1/2" = 1'-0"

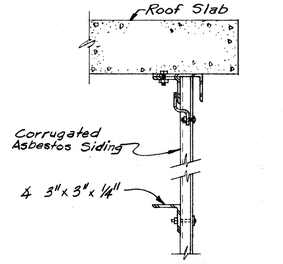

ROOF MOUNTING DETAIL K / 30

SCALE: 1 1/2" = 1'-0"

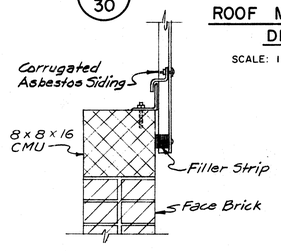

SIDING MOUNTING DETAIL L / 30

SCALE: 1 1/2" = 1'-0"

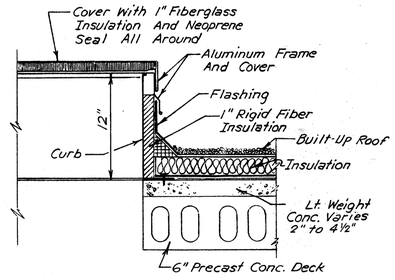

LADDER ACCESS DETAIL M / 30

SCALE: 1 1/2" = 1'-0"

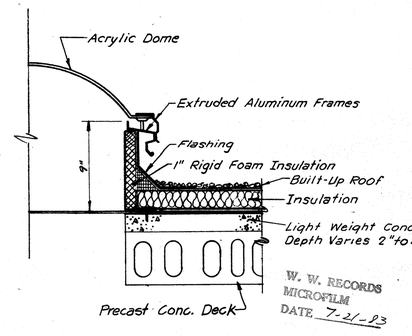

SKYLIGHT MOUNTING DETAIL N / 30

SCALE: 1 1/2" = 1'-0"

JOB NO. 3304-DS-2

CITY OF HOUSTON
DEPARTMENT OF PUBLIC WORKS

ALMEDA SIMS
SLUDGE DISPOSAL PLANT
PNEUMATIC CONVEYING, STORAGE AND LOADING FACILITIES

ARCHITECTURAL
ROOF AND WALL DETAILS

RECOMMENDED FOR APPROVAL:
Kenneth R. Lindsey
BINKLEY & HOLMES, INC. CONSULTING ENGINEERS

STATE OF TEXAS — STEPHEN A. JANDA — 42921 — REGISTERED PROFESSIONAL ENGINEER

STATE OF TEXAS — KENNETH R. LINDSEY — 31158 — REGISTERED PROFESSIONAL ENGINEER

APPROVED:

Walter W. Williams — WASTEWATER	PAVING
WATER	Jerry Dinkins — CONSTRUCTION
STORM SEWER	
ASST. DIRECTOR	DIRECTOR

DESIGNED BY: J.A.J. SCALE: AS SHOWN
DRAWN BY: J.S.F. & G.A.S. DATE: APRIL 1980
CHECKED BY: K.R.L. DRAWING NO. 26709
SHEET SHEET NO. 30 OF 51

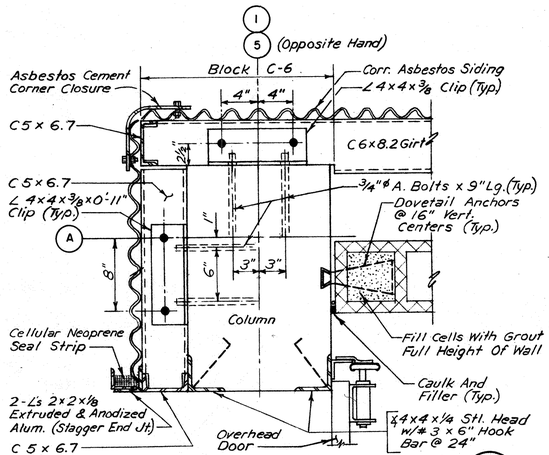

SIDING AND INTERIOR WALL DETAIL — A / 31

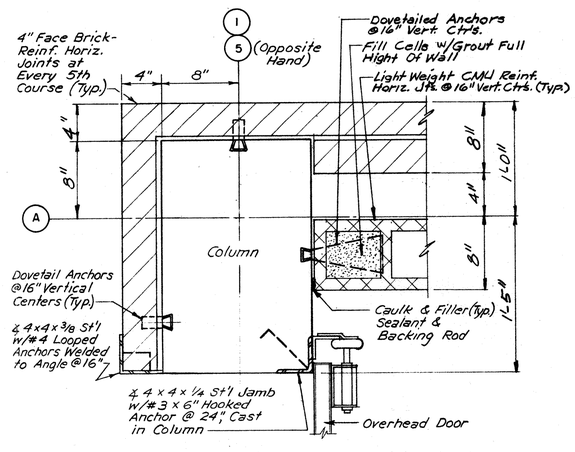

BRICK AND INTERIOR WALL DETAIL — B / 31

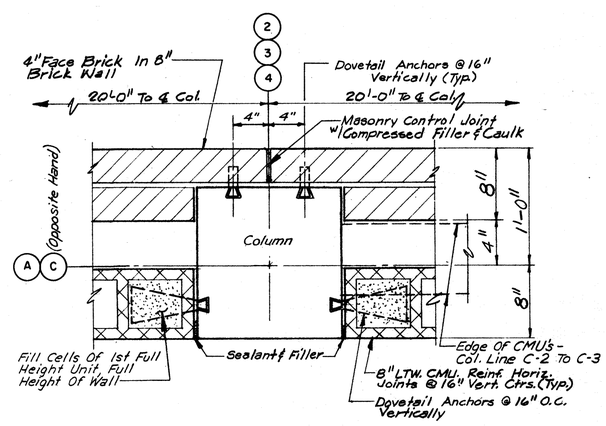

BRICK AND INTERIOR WALL DETAIL — C / 31

NOTE:
1. C.M.U. Cells To Be Filled With Grout And Reinforced With 1-#5 Bar (Full Height Of Wall) At 8'-0" Max.

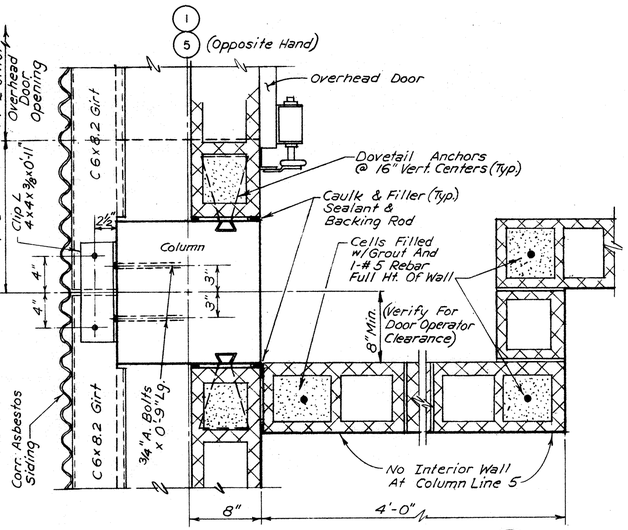

SIDING AND INTERIOR WALL DETAIL — D / 31

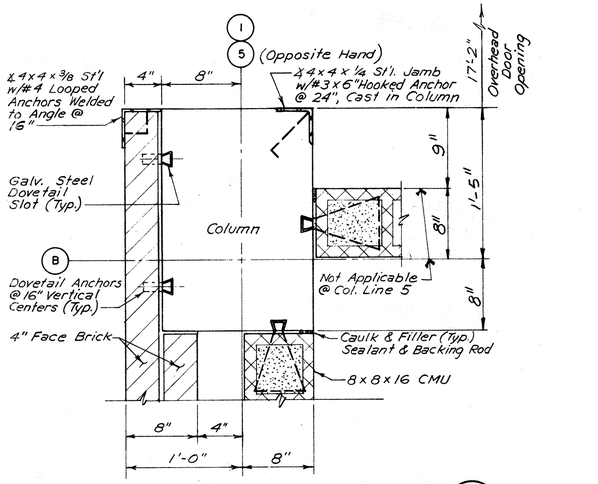

BRICK AND INTERIOR WALL DETAIL — E / 31

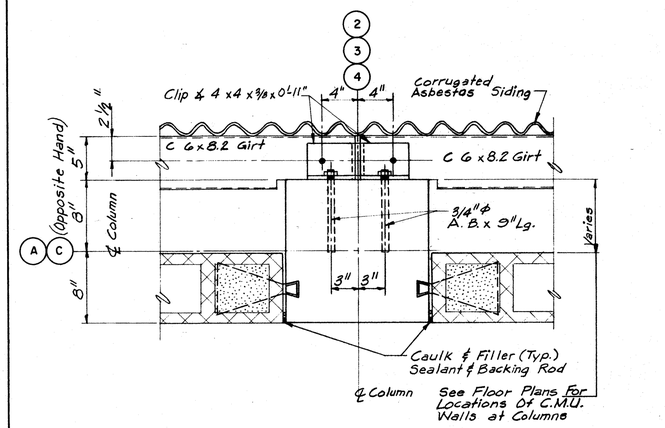

SIDING AND INTERIOR WALL DETAIL — F / 31

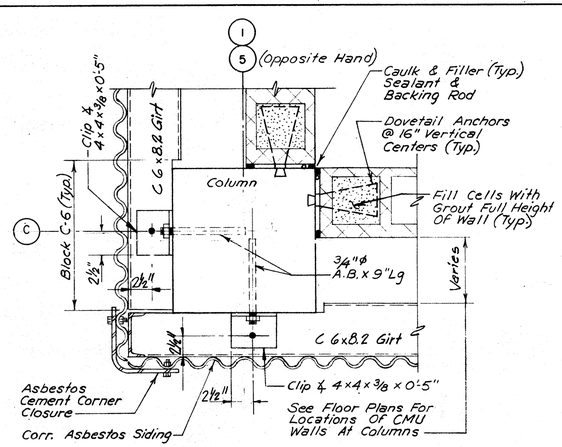

SIDING AND INTERIOR WALL DETAIL — G / 31

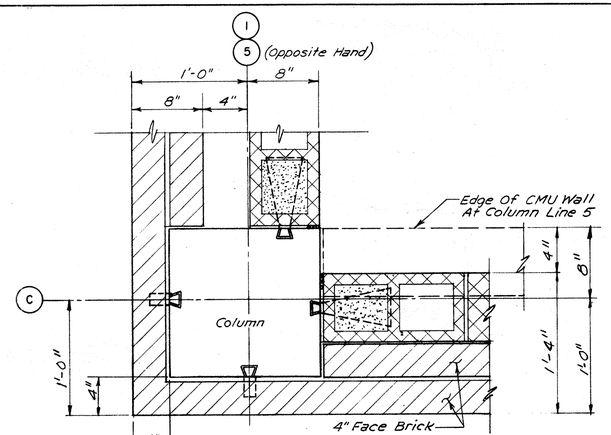

BRICK AND INTERIOR WALL DETAIL — H / 31

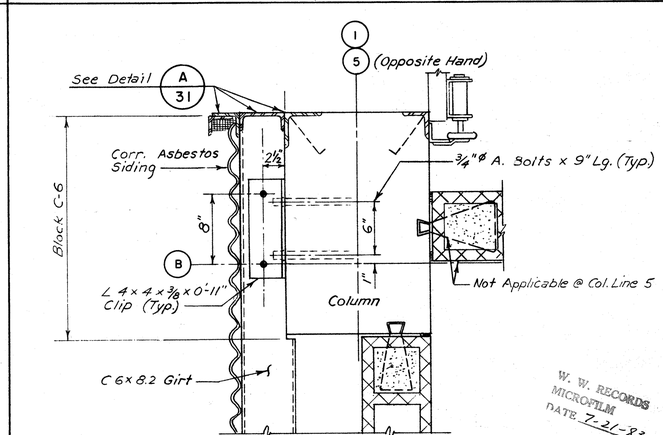

SIDING DETAIL - BELOW ELEV. 76.25 — J / 31

W. W. RECORDS MICROFILM DATE 7-21-83

JOB NO. 3304-DS-2

CITY OF HOUSTON
DEPARTMENT OF PUBLIC WORKS

ALMEDA SIMS
SLUDGE DISPOSAL PLANT
PNEUMATIC CONVEYING, STORAGE AND LOADING FACILITIES

ARCHITECTURAL
COLUMN AND WALL DETAILS

RECOMMENDED FOR APPROVAL:
Kenneth Binkley
BINKLEY & HOLMES, INC. CONSULTING ENGINEERS

STATE OF TEXAS — NORMAN JANDA — 42921 — REGISTERED PROFESSIONAL ENGINEER

STATE OF TEXAS — KENNETH R. LINDSEY — 81158 — REGISTERED PROFESSIONAL ENGINEER

APPROVED:

Walter Williams — WASTEWATER	PAVING
WATER	Jerry Dinkins — CONSTRUCTION
STORM SEWER	
ASST. DIRECTOR	DIRECTOR

DESIGNED BY: J.A.J. — SCALE: 1 1/2" = 1'-0"
DRAWN BY: J.S.F. & G.A.S. — DATE: APRIL 1980
CHECKED BY: K.R.L. — DRAWING NO. 26709
SHEET — SHEET NO. 31 OF 51

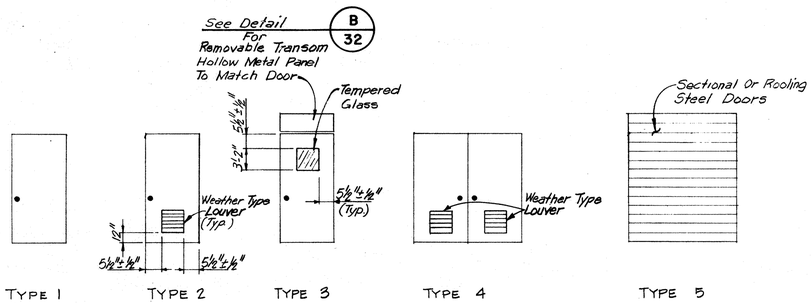

DOOR ELEVATIONS A 32

DOOR SCHEDULE

MARK	TYPE	STEEL HM.	STL. SECNL.	STL. ROLL UP	SIZE & THICKNESS	MASONARY OPENING	HEAD	JAMB	SILL	LINTEL TYPE	LINTEL LENGTH	REMARKS
1	1	X			3'x7'-2"x1¾"	3'-4"x7'-4"	H-1	J-1	S-1	2-¼"x3½"x¼" Rc 14"x11"	5'-8"	
2	1	X			3'x7'-2"x1¾"	3'-4"x7'-4"	H-2	J-2	S-5	2-¼"x3½"x¼"	5'-8"	
3	5			X	10'-2"x10'-1"	10'-0"x10'-0"	H-4	J-4	S-4	—	—	
4	5		X		17'-4"x22'-4"	17'-2"x22'-8"	H-5	J-5	S-4	—	—	
5	5		X		17'-4"x22'-4"	17'-2"x22'-8"	H-5	J-5	S-4	—	—	
6	1	X			3' x7'-2"x1¾"	3'-4"x7'-4"	H-2	J-2	S-2	2-¼"x3½"x¼"	5'-8"	
7	3	X			3' x7'-2"x1¾"	3'-4"x8'-8"	H-2	J-2	S-2	2-¼"x3½"x¼"	5'-8"	See Detail For Removable Transom Bar
8	2	X			5'x7' x1¾"	3'-4"x7'-2"	H-3	J-3	S-3	—	—	
9	4	X			2-3'x7'x1¾"	6'-4"x7'-2"				—	—	
10	2	X			3'x7'x 1¾"	3'-4"x7'-2"				—	—	
11	2	X								—	—	
12	2	X								—	—	
13	2	X								—	—	
14	2	X			3' x7' x1¾"	3'-4"x7'-2"				—	—	
15	4	X			2~3'x7'x1¾"	6'-4"x7'-2"	do	do	S-3	—	—	
16	2	X			3'x7'x 1¾"	3'-4"x7'-2"	H-3	J-3	S-1	—	—	
17	—	X			—	—	—	—	—	—	—	Door Size & Opening As Reqd By Elevator Manufac.
18	1	X			3'x7'-2"x1¾"	3'-4"x7'-4"	H-2	J-2	S-2	2-¼"x3½"x¼"	5'-8"	
19	—	X			—	—	—	—	—	2-¾"x3½"x¼"	5'-8"	Door Size & Opening As Req'd By Elevator Manufac.
20	2	X			3'x 7'x 1¾"	3'-4" x 7'-2"	H-3	J-3	S-1	—	—	

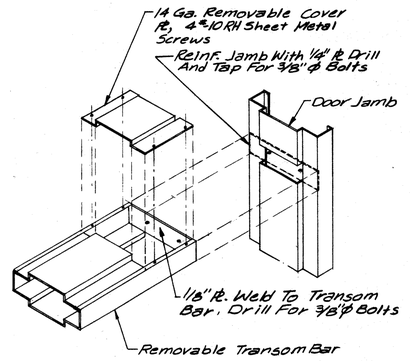

REMOVABLE TRANSOM BAR DETAIL B 32

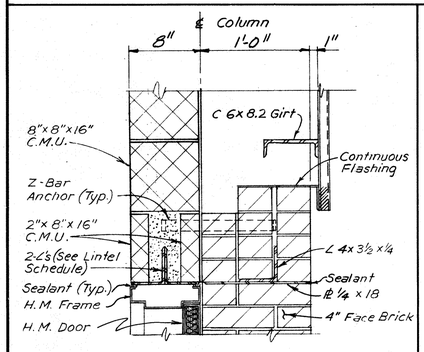

H-1

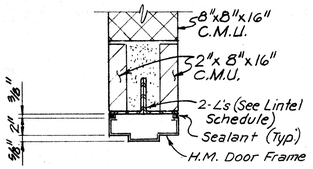

H-2

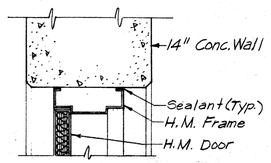

H-3

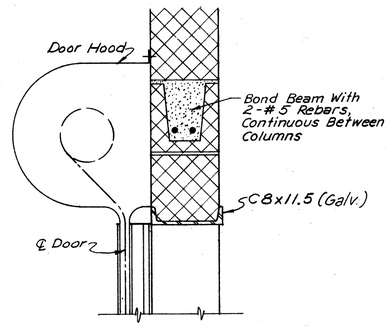

H-4

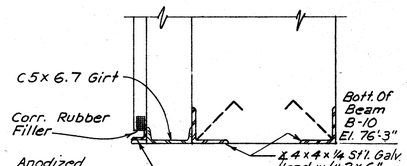

H-5

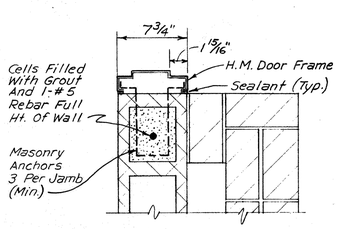

J-1

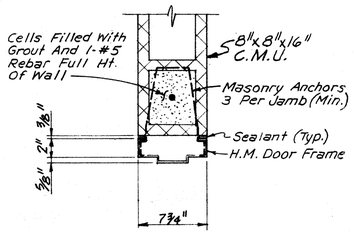

J-2

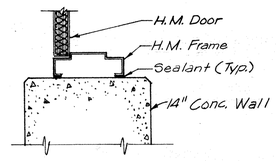

J-3

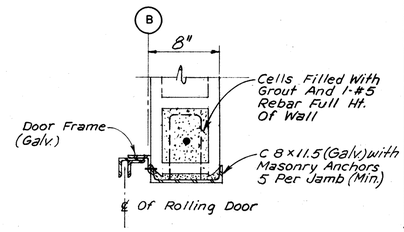

J-4

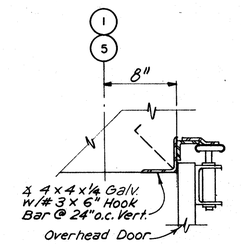

J-5

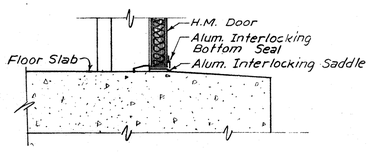

S-1

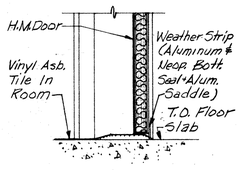

S-2

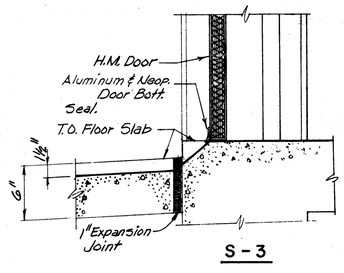

S-3

S-4

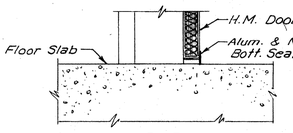

S-5

W. W. RECORDS MICROFILM DATE 7-21-83

JOB NO 3304-DS-2

CITY OF HOUSTON
DEPARTMENT OF PUBLIC WORKS

ALMEDA SIMS
SLUDGE DISPOSAL PLANT
PNEUMATIC CONVEYING, STORAGE AND LOADING FACILITIES

ARCHITECTURAL
DOOR SCHEDULE AND DETAILS

RECOMMENDED FOR APPROVAL:
Kenneth R. Binkley
BINKLEY & HOLMES, INC. CONSULTING ENGINEERS

STATE OF TEXAS JOSEPH JARDA 42927 REGISTERED PROFESSIONAL ENGINEER

STATE OF TEXAS KENNETH R. LINDSEY 31158 REGISTERED PROFESSIONAL ENGINEER

APPROVED:
Walter Williams — WASTEWATER
PAVING
Jerry A. Gibbins — CONSTRUCTION
WATER
STORM SEWER
ASST. DIRECTOR
DIRECTOR

DESIGNED BY: J.A.J. SCALE: NONE
DRAWN BY: J.S.F. & G.A.S. DATE: APRIL 1980
CHECKED BY: K.R.L. DRAWING NO. 26709
SHEET SHEET NO. 32 OF 51

LOUVER AND WINDOW SCHEDULE

MARK	MASONARY OPENING	HEAD	JAMB	SILL	LINTEL TYPE	LINTEL LENGTH	REMARKS
					LOUVERS		
L-1	4'-0"x2'-8"	LH-1	LJ-1	LS-1	3-L 4"x3½"x¼" 2L ⅜"x1½" x ⅛"	4'-0"	
L-2							
L-3							
L-4							
L-5	do	do	do	do	do	do	
L-6	4'-0"x2'-8"	LH-1	LJ-1	LS-1	3-L 4"x3½"x¼" 2L ⅜"x1½" x ⅛"	4'-0"	
L-7	6'-0"x4'-0"	LH-2	LJ-2	LS-2	3-L 4"x3½"x¼" 2L ½"x8" x ⅛"	5'-4"	
					WINDOWS		
W-1	3'-4"x5'-4"	WH-1	WJ-1	WS-1	2-L 4"x3½"x¼"	6'-8"	
W-2	3'-4"x8'-0"	do	do	do	do	9'-4"	
W-3	3'-4"x8'-0"	WH-1	WJ-1	WS-1	2-L 4"x3½"x¼"	9'-4"	

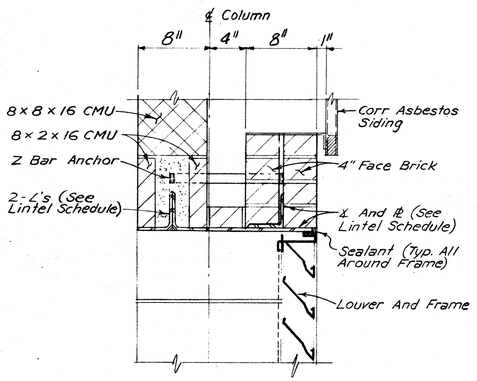

LH-1

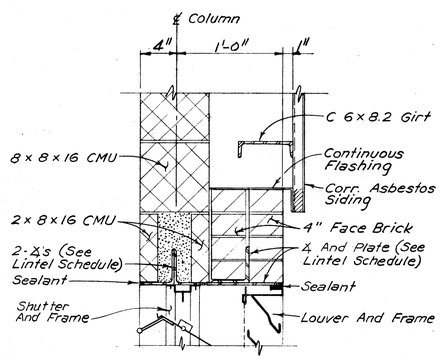

LH-2

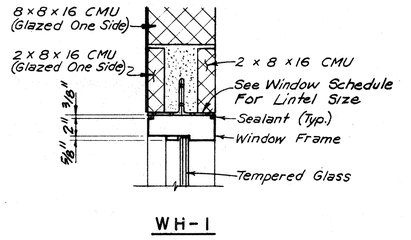

WH-1

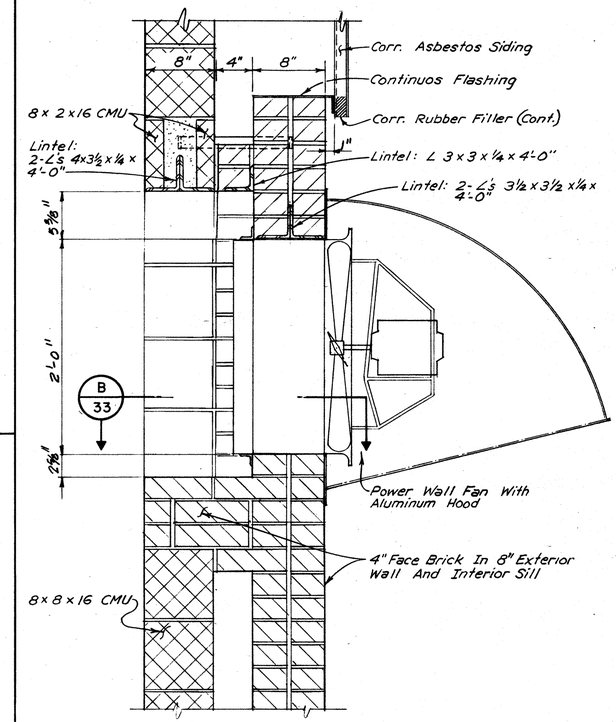

VENTILATION FANS: PWF-1 AND PWF-2 - SECTION A/33

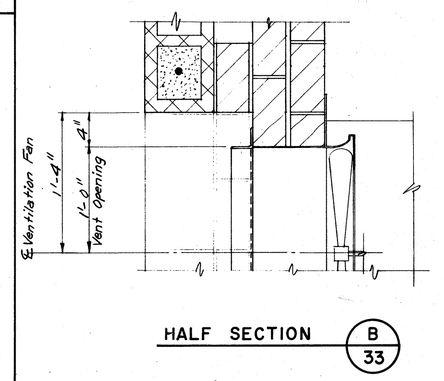

HALF SECTION B/33

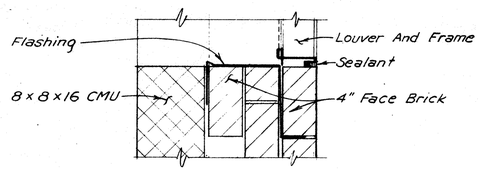

LJ-1

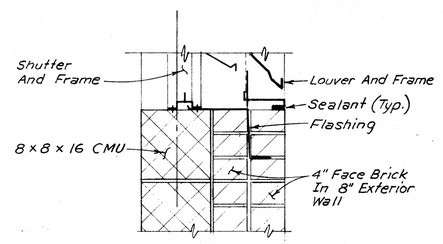

LJ-2

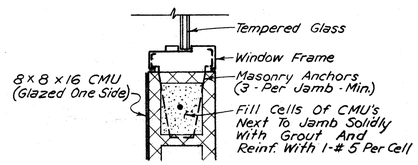

WJ-1

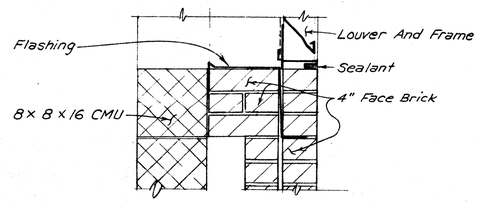

LS-1

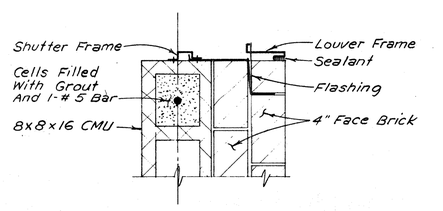

LS-2

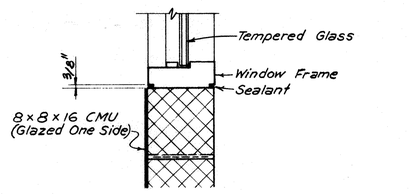

WS-1

W. W. RECORDS MICROFILM DATE 7-21-83

JOB NO. 3304-DS-2

CITY OF HOUSTON
DEPARTMENT OF PUBLIC WORKS

ALMEDA SIMS
SLUDGE DISPOSAL PLANT
PNEUMATIC CONVEYING, STORAGE AND LOADING FACILITIES

ARCHITECTURAL
LOUVER, WINDOW AND VENTILATION FAN DETAILS

RECOMMENDED FOR APPROVAL:
Kenneth R. Binkley
BINKLEY & HOLMES, INC. CONSULTING ENGINEERS

APPROVED:
Walter W. Williams — WASTEWATER
WATER
STORM SEWER
ASST. DIRECTOR
PAVING
CONSTRUCTION
DIRECTOR

DESIGNED BY: J.A.J. SCALE: 1 ½" = 1'-0"
DRAWN BY: J.S.F. & G.A.S. DATE: APRIL 1980
CHECKED BY: K.R.L. DRAWING NO. 26709
SHEET SHEET NO. 33 OF 51

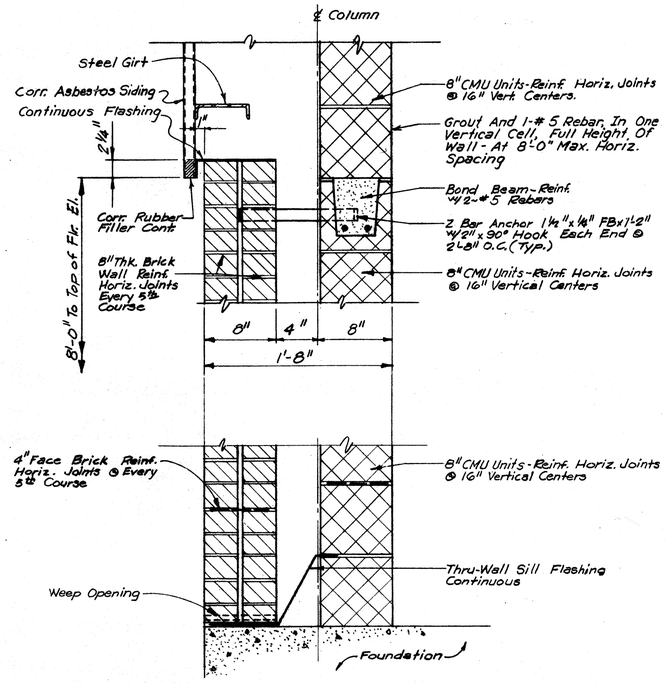

TYPICAL BRICK WALL SECTION — A/34

SCALE: 1 1/2" = 1'-0"

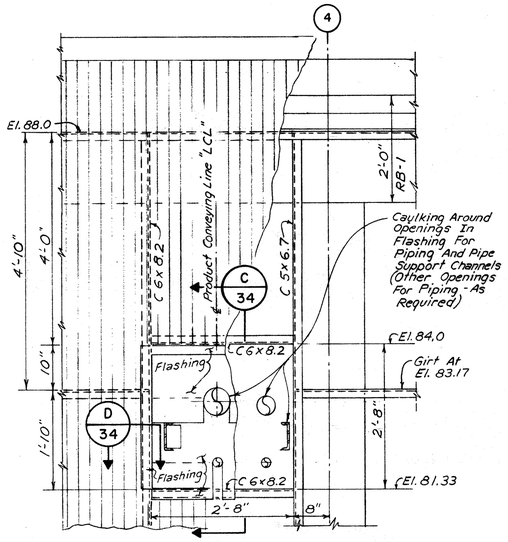

WALL OPENING ELEVATION - DETAIL — B/34

SCALE: 3/4" = 1'-0"

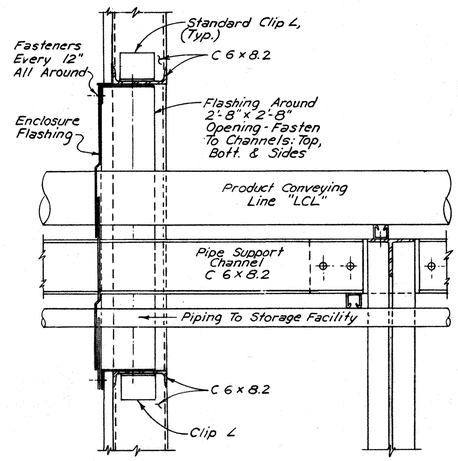

SECTION C/34

SCALE: 1 1/2"=1'-0"

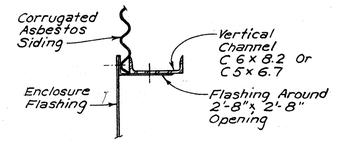

JAMB SECTION D/34

SCALE: 1 1/2" = 1'-0"

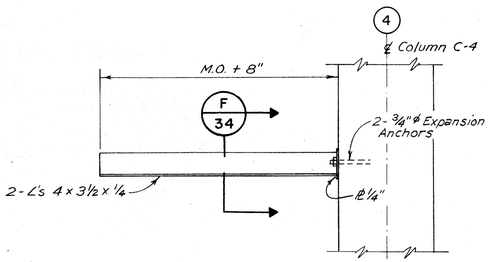

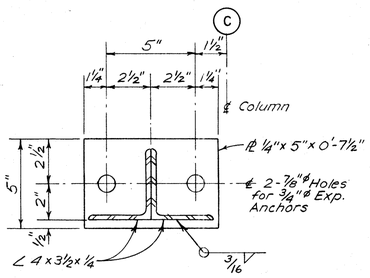

SECTION F/34

SCALE: 3" = 1'-0"

METAL LINTEL DETAIL — E/34

SCALE: 1" = 1'-0"

W. W. RECORDS MICROFILM DATE 7-21-83

JOB NO. 3304-DS-2

CITY OF HOUSTON
DEPARTMENT OF PUBLIC WORKS

ALMEDA SIMS
SLUDGE DISPOSAL PLANT
PNEUMATIC CONVEYING, STORAGE AND LOADING FACILITIES

ARCHITECTURAL MISCELLANEOUS DETAILS

RECOMMENDED FOR APPROVAL:

Kenneth R. Lindsey
BINKLEY & HOLMES, INC. CONSULTING ENGINEERS

STATE OF TEXAS — JOSEPH A. LYNDA — 42971 — REGISTERED PROFESSIONAL ENGINEER

STATE OF TEXAS — KENNETH R. LINDSEY — 41168 — REGISTERED PROFESSIONAL ENGINEER

APPROVED:

Walter Williams — WASTEWATER
WATER
STORM SEWER
Richard C. Stein — ASST. DIRECTOR

PAVING
Jerry Dickens — CONSTRUCTION
Jimmie Schindewolf — DIRECTOR

DESIGNED BY: J.A.J. SCALE: AS SHOWN
DRAWN BY: J.S.F & G.A.S. DATE: APRIL 1980
CHECKED BY: K.R.L. DRAWING NO. 26709
SHEET SHEET NO. 34 OF 51

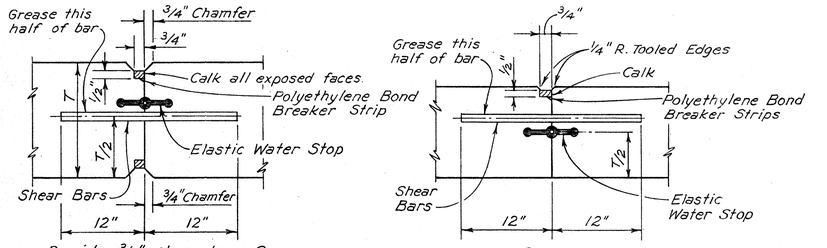

CONTRACTION JOINTS

No Scale

Type A - With Elastic Water Stop
Type B - Without Elastic Water Stop

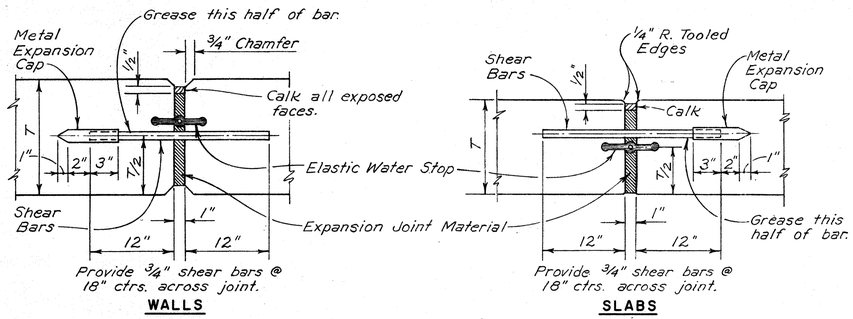

EXPANSION JOINTS

No Scale

Type C - With Elastic Water Stop.
Type D - Without Elastic Water Stop.

NOTES: 1. Reinforcing shall not be extended across joint.
2. Shear bars shall be smooth and free from rust or scale.

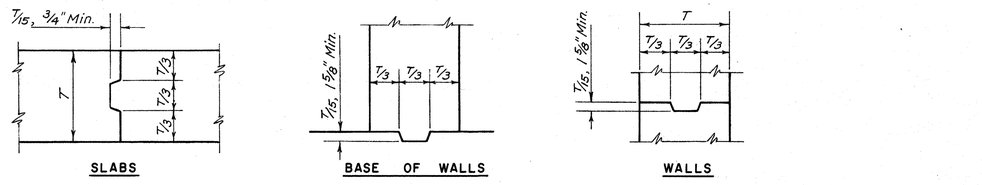

JOINTS WITHOUT WATER STOPS

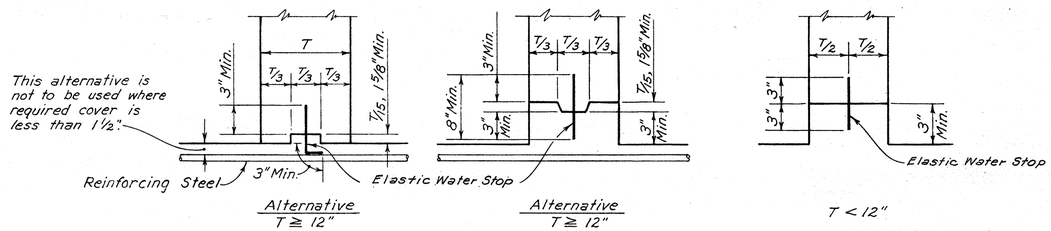

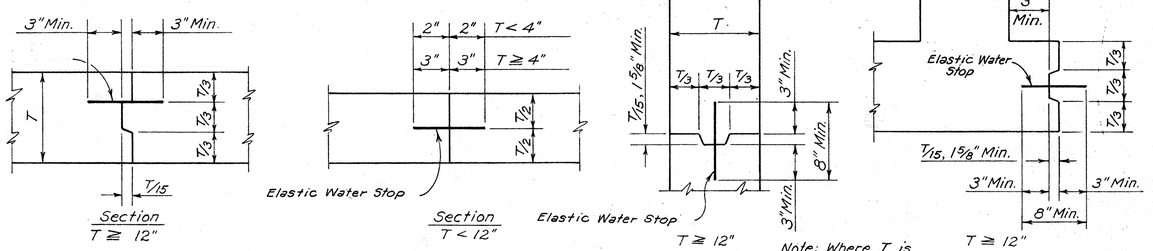

WATERTIGHT JOINTS

TYPICAL CONSTRUCTION JOINTS

NOTE: Reinforcing steel is to be carried across all construction joints.

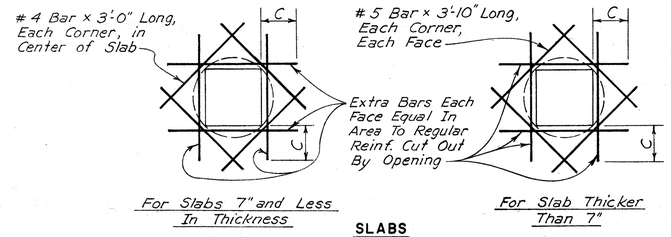

Note: These details apply to openings larger than 18" in Diam. or diagonal.

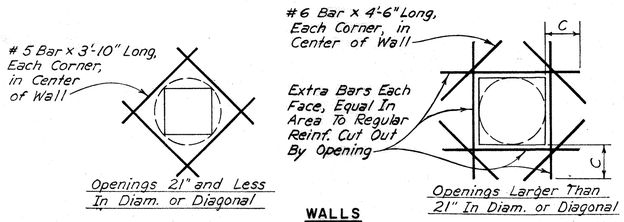

TYPICAL EXTRA REINFORCING AT OPENINGS

C = The Required Length for Lapped Splice for Top Bars as Shown on This Sheet.

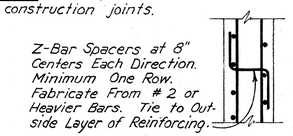

Z-Bar Spacers at 8" Centers Each Direction. Minimum One Row. Fabricate From # 2 or Heavier Bars. Tie to Outside Layer of Reinforcing.

SPACERS FOR WALL REINFORCEMENT

BAR SIZE	LENGTH OF LAPPED SPLICES FOR REINFORCING IN INCHES			
	SPLICES NOT STAGGERED		WITH STAGGERED SPLICES	
	*TOP BARS	OTHERS	*TOP BARS	OTHERS
3	20	20	15	15
4	23	20	17	15
5	29	20	22	15
6	37	26	28	20
7	50	36	38	27
8	66	47	50	35
9	83	60	62	45
10	106	76	80	57
11	130	93	98	70

* Top bars are horizontal bars so placed that more than 12" of concrete is cast in the member below the bar. Horizontal bars in walls are to be provided with laps as required for top bars.

Except as otherwise indicated on the plans, lengths for lapped splices shall be not less than (no minus tolerance) shown above.

Lapped splices shall not be made at points of max. stress as determined by the Engineer, and shall not be spaced closer than 6" on ctrs. Splices are staggered if not more than 1/2 are spliced in a lap splice length.

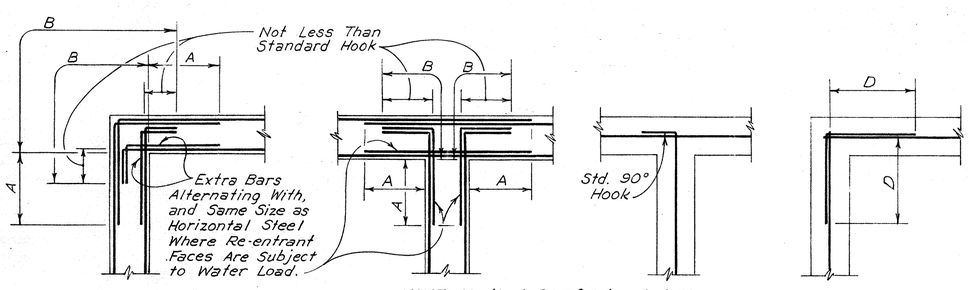

A = 1/5 the clear span distance measured horizontally or vertically, whichever is the smaller; but in no case less than the required length of lapped splices for top bars as shown on this sheet.

B = Sufficient length to permit bars to extend through the wall to the opposite face and terminate in a standard hook.

D = Not less than the length required for lapped splices for top bars, as shown on this sheet.

TYPICAL CORNER REINFORCING DETAILS

GENERAL NOTES:

Details on this sheet apply to the entire set of plans except where specifically shown otherwise.

CONCRETE COVER FOR REINFORCEMENT

LOCATION	MINIMUM COVER
Unformed Surfaces Adjacent to Excavation	3"
Unformed Surfaces Over Seal Slab	2"
Formed or Top Surfaces Exposed to Weather or Saturated Air, Submerged or in Contact with Earth:	
# 6 or Larger Bars	2"
# 5 or Smaller Bars	1 1/2"
Other Locations:	
Bars in Beams or Girders, Including Stirrups	1 1/2"
Column Spirals or Ties	1 1/2"
Other Bars:	
# 7 or Larger	Bar Diameter
# 6 or Smaller	3/4"

Cover for reinforcing steel shall not be less than the minimum given above (no minus tolerance), and shall not exceed the minimum by more than 1/4 inch where the concrete thickness is 24 inches or less, or more than 1/2 inch where the concrete thickness is more than 24 inches.

JOB NO. 3304-DS-2

CITY OF HOUSTON
DEPARTMENT OF PUBLIC WORKS

ALMEDA SIMS
SLUDGE DISPOSAL PLANT
PNEUMATIC CONVEYING, STORAGE AND LOADING FACILITIES

CONCRETE
STANDARD DETAILS

RECOMMENDED FOR APPROVAL:
Kenneth R. Lindsey
BINKLEY & HOLMES, INC. CONSULTING ENGINEERS

STATE OF TEXAS — JOHN K. JANDA — 42971 — REGISTERED PROFESSIONAL ENGINEER
STATE OF TEXAS — KENNETH R. LINDSEY — 51158 — REGISTERED PROFESSIONAL ENGINEER

APPROVED:

WASTEWATER	PAVING
WATER	CONSTRUCTION
STORM SEWER	
ASST. DIRECTOR	DIRECTOR

DESIGNED BY: J. A. J. SCALE: NONE
DRAWN BY: G. A. S. DATE: APRIL 1980
CHECKED BY: K. R. L. DRAWING NO. 26709
SHEET SHEET NO. 35 OF 51

W. W. RECORDS MICRO-FILM DATE 7-21-83

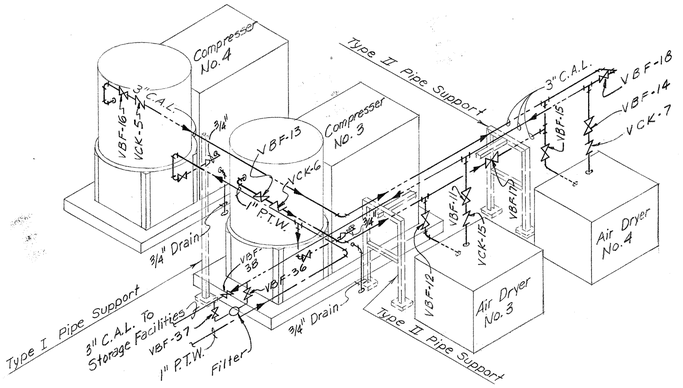

COMPRESSOR NO's 3 & 4

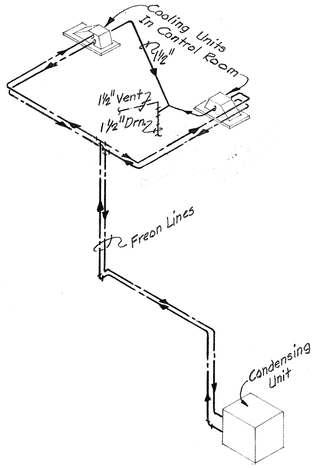

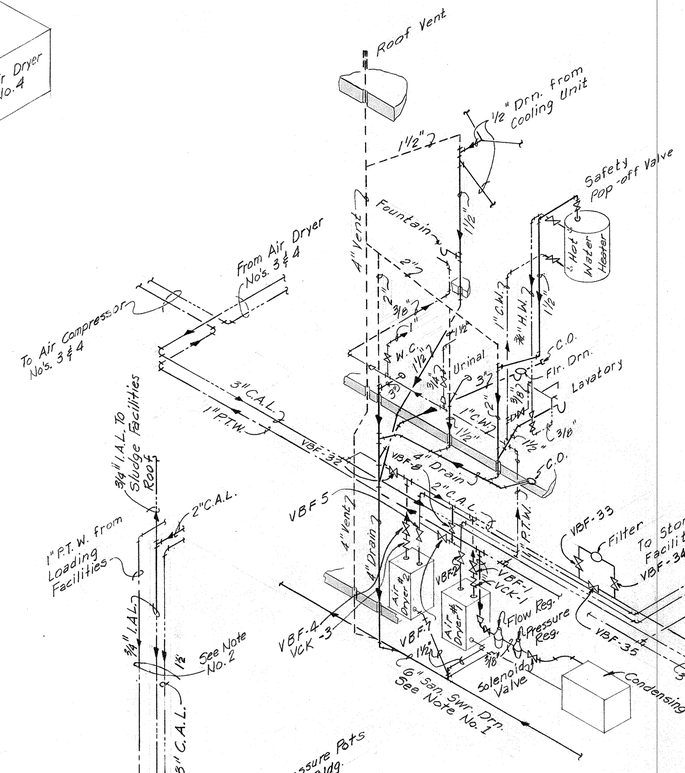

HVAC

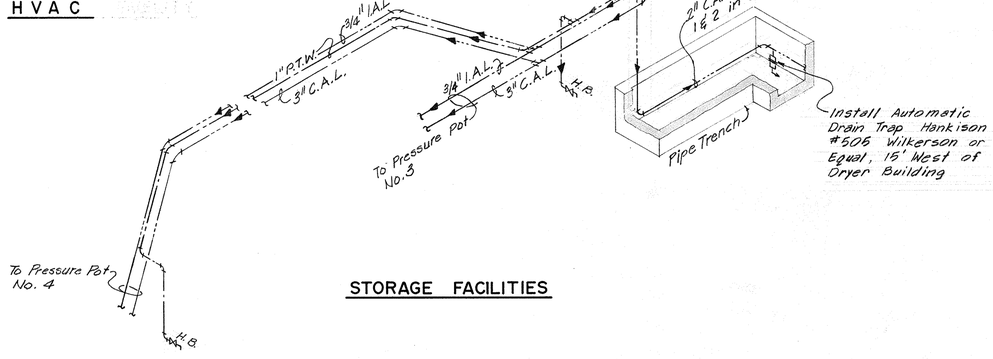

STORAGE FACILITIES

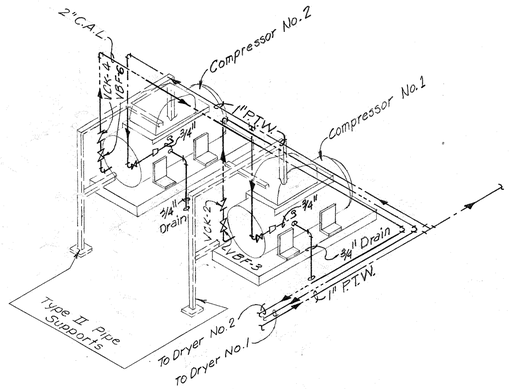

COMPRESSOR NO's. 1 & 2

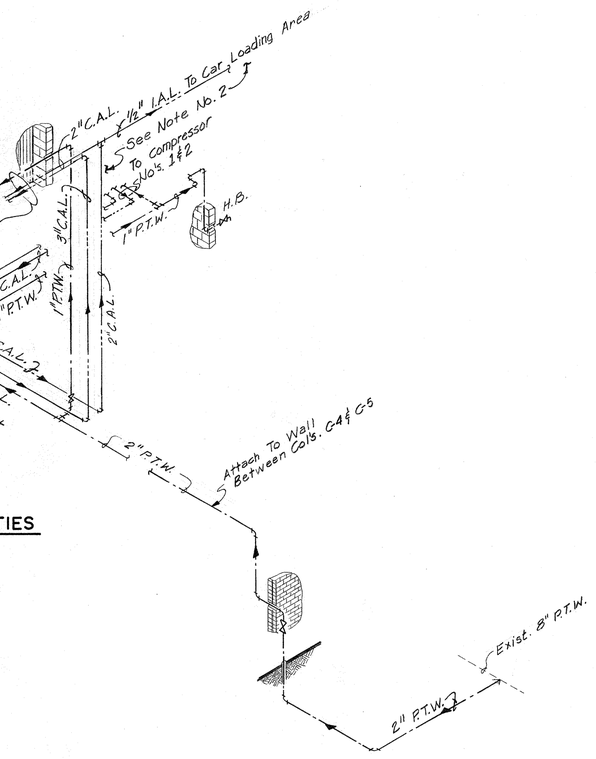

LOADING FACILITIES

LEGEND

———	Drain Line
——·——	Cold Water Line
——··——	Hot Water Line
——···——	Air Line
— — — —	Vent Air
Plt. Air	Plant Air
P.T.W.	Potable Water
I.A.L.	Instrument Air Line
C.A.L.	Conveying Air Line
H.B.	Hose Bibb

NOTES:

1. Floor Drains And Drain Lines Below El. 54.50 Are Not Shown. See Loading Facilities Plan Sheet 11.
2. Production and Rail-Car Material Conveying Lines not Shown For Clarity. See Respective Drawings For Routing of Lines.
3. See Contract Specifications Sec. 15-076 Item 3-1 For Union Installation On Threaded Pipe.
4. See Sheet No. 11 For Pipe Support Details.

W. W. RECORDS
MICROFILM
DATE 7-21-83

JOB NO. 3304-DS-2

CITY OF HOUSTON
DEPARTMENT OF PUBLIC WORKS

ALMEDA SIMS
SLUDGE DISPOSAL PLANT
PNEUMATIC CONVEYING, STORAGE AND LOADING FACILITIES

PLUMBING AND HVAC ISOMETRIC

RECOMMENDED FOR APPROVAL:
Kenneth R. Lindsey
BINKLEY & HOLMES, INC. CONSULTING ENGINEERS

STATE OF TEXAS — JAMES J. JANDA — 42921 — REGISTERED PROFESSIONAL ENGINEER

STATE OF TEXAS — KENNETH R. LINDSEY — 51158 — REGISTERED PROFESSIONAL ENGINEER

APPROVED:
Walter Williams — WASTEWATER
WATER
STORM SEWER
ASST. DIRECTOR
PAVING CONSTRUCTION
Jimmie Schindler — DIRECTOR

DESIGNED BY: J.A.J. SCALE: NONE
DRAWN BY: J.S.F. DATE: APRIL 1980
CHECKED BY: K.R.L. DRAWING NO. 26709
SHEET SHEET NO. 36 OF 51

ELECTRICAL LEGEND

SYMBOL	DESCRIPTION
---------	CONDUIT UNDERGROUND OR IN CONCRETE SLAB.
———	CONDUIT EXPOSED OR CONCEALED IN EITHER CEILING OR WALL.
~~	FLEXIBLE CONDUIT.
——o	CONDUIT TURNING UP
——●	CONDUIT TURNING DOWN.
——⊣	CONDUIT STUBBED & CAPPED.
——E——	EMERGENCY POWER CONDUIT.
——T——	EMPTY CONDUIT WITH PULLING LINE FOR TELEPHONE.
——F——	FIRE ALARM CONDUIT.
——G——	BARE STRANDED COPPER GROUND WIRE, SIZE AS INDICATED.
LPA-1,2,3	HOMERUN TO PANEL - SUBSCRIPT DENOTES PANEL AND CIRCUITS. CIRCULAR SLASH FOR GROUND WIRE, LONG SLASH NEUTRAL, SHORT SLASH PHASE CONDUCTOR.
(A)	LIGHT FIXTURE, FOR TYPE REFERENCE LTG·FIXT· SCHEDULE.
A	FLOURESCENT FIXTURE, FOR TYPE REFERENCE LTG·FIXT· SCHEDULE.
A	EXIT LIGHT, ARROW INDICATES DIRECTION, LETTER DENOTES TYPE.
(A)	FLOOD-LIGHT LUMINARE, ARROW INDICATES AIMING DIRECTION. LETTER DENOTES TYPE.
(A) (A)	WALL/COLUMN MOUNTED LIGHT FIXTURE, LETTER DENOTES TYPE.
J	JUNCTION BOX
PB	PULL BOX
	BRANCH CIRCUIT PANEL BOARD 120/240V OR 120/208V.
	BRANCH CIRCUIT PANEL BOARD 277/480 V.
	TELEPHONE TERMINAL BOARD.
	NON-FUSIBLE DISCONNECT SWITCH SIZE AS NOTED.
	FUSIBLE DISCONNECT SWITCH SIZE AS NOTED.
	MAGNETIC STARTER - SIZE AS NOTED
	COMBINATION BREAKER - MAGNETIC STARTER SIZE AS NOTED
	COMBINATION MAGNETIC STARTER - DISCONNECT SWITCH SIZE AS NOTED.
(5)	THREE PHASE MOTOR HORSEPOWER INDICATED.
(2)	SINGLE PHASE MOTOR HORSEPOWER INDICATED.
	BREAKER COMBINATION MAGNETIC STARTER, SIZE AS NOTED. REFERENCE ONE LINE DIAGRAM.
	TRANSFORMER WITH PRIMARY AND SECONDARY VOLTAGE AND KVA RATING. REFERENCE ONE LINE DIAGRAM.
	START-STOP PUSH BUTTON. (MOMENTARY CONTACT)
	STRIP LIGHT, FOR TYPE REFERENCE LUMINAIRE SCHEDULE.
T	TRANSFORMER, DESCRIPTION AND RATING AS NOTED. REFERENCE TRANSFORMER SCHEDULE.
(T)	THERMOSTAT
1, 2, 3 Etc.	INDICATES CIRCUITRY
a, b, c Etc.	INDICATES SWITCHING

MOUNTING F	MOUNTING S	
		F - INDICATES FLUSH MOUNTED. S - INDICATES SURFACE MOUNTED.
$	S	SINGLE POLE SWITCH.
$2	S2	TWO POLE SWITCH.
$3	S3	THREE WAY SWITCH.
$4	S4	FOUR WAY SWITCH.
$WP	SWP	WEATHERPROOF SWITCH.
$K	SK	KEY OPERATED SWITCH.
$D	SD	DIMMER SWITCH.
$M	SM	MANUAL MOTOR STARTING SWITCH.
$P	SP	SWITCH WITH PILOT LIGHT.
		SINGLE RECEPTACLE.
		DUPLEX RECEPTACLE.
		SINGLE RECEPTACLE, 2-POLE, 3 WIRE.
		TELEPHONE OUTLET.
		CLOCK RECEPTACLE.
		QUADRAPLEX RECEPTACLE.
OL/P		MODULAR OVERLOAD RELAY WITH HEATER AND PHASE UNBALANCE COMPONENT. (MOTOR PROTECTION)

PANEL LPA SCHEDULE LOCATION MCC-3B

120/240 VOLT 1 PHASE 3 WIRE 225 AMP. BUS 225 MAIN BKR. 10,000 AMPS. RMS. SYM.

DESCRIPTION	LOAD WATTS	BKR. SIZE	CKT. NO.	PHASE LOADING AMPS. A	PHASE LOADING AMPS. B	CKT. NO.	BKR. SIZE	LOAD WATTS	DESCRIPTION
LTG. EQUIP. ROOM	900	20/1	1	8.3	10	2	20/1	1200	LTG. FOR CAT WALK
RECEPT. EQUIP ROOM	1200	20/1	3		10	8 4	20/1	960	LTG. CAR LOADING
LTG. CONTROL ROOM	1000	20/1	5	8.3	7	6	20/1	850	LTG. GENERAL AREA
LTG. CONTROL ROOM	800	20/1	7		6.7	7.9 8	20/1	950	FLOOD LTG. SOUTH WALL
EDF	900	20/1	9	7.5	7.9	10	20/1	950	FLOOD LTG EAST & N.E.
RECEPT CONTROL ROOM	1000	20/1	11		8.3	7.9 12	20/1	950	FLOOD LTG WEST & N.W.
" "	800	20/1	13	6.7	18.8	14	25/2	4500	WATER HEATER
RECPT. LOADING AREA	1200	20/1	15		10	18.8 16	↓	" "	" "
EXH. FAN No. 1 & No. 2	1200	20/1	17	10	7.7	18	20/2	1840	COOLING UNIT #1
SPARE			19			7.7 20	↓	" "	" "
SPARE			21	7.7		22	20/2	1840	COOLING UNIT #2
SPARE			23		7.7	24	↓		" "
SPACE			25			26			SPACE
SPACE			27			28			SPACE
SPACE			29			30			SPACE
SPACE			31			32			SPACE
SPACE			33			34			SPACE
SPACE			35			36			SPACE
TOTAL CONNECTED LOAD	9000			99.9	93			14040	
TOTAL CONNECTED LOAD AT 125 %				125	116.25				

PANEL LPB SCHEDULE LOCATION STORAGE FACILITY

120/240 VOLT 1 PHASE 3 WIRE 225 AMP. BUS 150 MAIN BKR. 10,000 AMPS. RMS. SYM.

DESCRIPTION	LOAD WATTS	BKR. SIZE	CKT. NO.	PHASE LOADING AMPS. A	PHASE LOADING AMPS. B	CKT. NO.	BKR. SIZE	LOAD WATTS	DESCRIPTION
LTG ROOF TOP	1000	20/1	1	8.33	10.8	2	20/1	1300	LIGHTING ROOF TOP
LTG ROOF TOP	1000	20/1	3		8.33	5.8 4	20/1	690	PRV # 4
LTG BIN #2 & PRE. VESSEL	1400	20/1	5	11.7	5.8	6	20/1	690	PRV # 5
LTG BIN #1 & #3	1400	20/1	7		11.7	5.8 8	20/1	690	PRV # 6
LTG BIN #5 & #7	1200	20/1	9	10	10	10	20/1	1200	LTG BIN #4 & 6
LTG. BIN #8 & PRE. VESSEL	1400	20/1	11		11.7	5 12	20/1	600	LTG POWER PACK AREA
RECEPT. ROOF TOP	800	20/1	13	6.6	2.5	14	20/1	300	ELEVATOR LTG.
LTG. LADDER	600	20/1	15		6.6	5 16	20/1	800	RECEPT.
SPARE		20/1	17	7.9		18	20/1	950	FLOODLIGHT SOUTH AND WEST WALL
SPARE		20/1	19		8.33	20	20/1	1000	RECEPT.
SPARE		20/1	21	4.2		22	20/1	500	MULTIPLEXER (M-2)
SPARE		20/1	23		4.2	24	20/1	1000	MULTIPLEXER (M-3&4)
TOTAL CONNECTED LOAD	8800			77.83	72.46			9220	
TOTAL CONNECTED LOAD AT 125 %				97.00	91.00				

TRANSFORMER SCHEDULE

TRANS. NO.	KVA SIZE	PHASE	VOLTAGE PRI.	VOLTAGE SEC.	INSUL. CLASS	TAPS FCAN	TAPS FCBN	REMARKS
1	37.5	1	480	120/240	220	2-2½%	4-2½%	FOR PNL LPA
2	25	1	480	120/240	220	2-2½%	4-2½%	FOR PNL LPB
3	7.5	1	480	120/240	220	2-2½%	4-2½%	IN MCC-3B FOR PNL-IPA

LIGHTING FIXTURE SCHEDULE

TYPE	MANUFACTURER & MODEL/CAT. NUMBER	LAMP	VOLT	DESCRIPTION
A	CROUSE-HINDS CAT. #VXHA 42 GRA OR EQUAL	200W A-23	120	LIGHTING FIXTURE STANCHION MOUNTED ON 2" PIPE
B	CROUSE-HINDS CAT. #VXHBF 22GP OR EQUAL	200W A-23	120	WALL MOUNTED
C	CROUSE-HINDS #VXHF 25GP	100W A 21	120	CEILING MOUNTED
D	LITHONIA CAT. # 2GP 240-A12 OR EQUAL	2-F40 T12-CW	120	1X4 RECESS
E	LITHONIA CAT. # 2GP-240-A12 OR EQUAL	4-F-40 T12-CW	120	2x4 RECESSED TROFFER
F	CROUSE HINDS CAT # VMV52 TW100 GPRA 70	LU 100/ BU	120	WALL MOUNTED
F_1	CROUSE HINDS CAT # VMV53C250RDA-INRS	LU 250/ BU/S	120	CEILING MOUNTED
G	CROUSE HINDS CAT # VMV52TW150 GPRA TO OR EQUAL	LU 150 D/BU	120	WALL MOUNTED
H	CROUSE HIND CAT # MVM-4 LEC-PC OR EQUAL	LU 400/ BU	120	FLOOD LIGHTS, HPS WALL MOUNTED
J				
K				
L				
M				
N				
P				
Q				
R				
S				
T				

ELECTRICAL LOAD ANALYSIS

FEEDER TO "MCC-3A" CONSISTS OF TWO 4" CONDUITS EACH WITH 3-500 MCM & #1/0 GND (COPPER)

LIGHTING LOAD	
LOADING BUILDING	9.00 KW
STORAGE FACILITY	10.20 KW
25% OF LTG. LOAD	4.80 KW
TOTAL LIGHTING LOAD	24.00 KW
30 CONVENIENCE RECEPT @ 180W EA.	5.00 KW
MISC. EQUIPMENT LOAD	12.17 KW
AIR CONDITIONING LOAD	8.16 KVA
3Ø MOTOR LOAD	369.52 KVA
LARGEST MOTOR X 0.25	24.75 KVA
TOTAL POWER LOAD	419.60 KVA
TOTAL POWER AND LIGHTING LOAD	443.60 KVA
443.6 KVA @ 480V, 3Ø, 60HZ	533.58 AMP
THEREFORE 2-500 MCM (760 AMP) PER PHASE IS SUFFICIENT TO SERVE LOAD	

PANEL IPA SCHEDULE LOCATION MCC-3B

120/240 VOLT 1 PHASE 3 WIRE 60 AMP. BUS 60 MAIN BKR 10000 AMPS. RMS. SYM.

DESCRIPTION	LOAD WATTS	BKR. SIZE	CKT. NO.	PHASE LOADING AMPS. A	PHASE LOADING AMPS. B	CKT. NO.	BKR. SIZE	LOAD WATTS	DESCRIPTION
INSTRUMENTATION	15/1		1			2	15/1		INSTRUMENTATION
POWER REQUIREMENTS	15/1		3			4	15/1		POWER REQUIREMENTS
AS NEEDED BY	15/1		5			6	15/1		AS NEEDED BY
PNEUMATIC CONTROL	15/1		7			8	15/1		PNEUMATIC CONTROL
SYSTEM SUPPLIER	15/1		9			10	15/1		SYSTEM SUPPLIER
SPARE	15/1		11			12	15/1		SPARE

W. W. RECORDS MICROFILM DATE 7-21-83

JOB NO. 3304-DS-2

CITY OF HOUSTON
DEPARTMENT OF PUBLIC WORKS

ALMEDA SIMS
SLUDGE DISPOSAL PLANT

PNEUMATIC CONVEYING, STORAGE AND LOADING FACILITIES

ELECTRICAL
LEGEND AND SCHEDULES

RECOMMENDED FOR APPROVAL:

Kenneth R. Binkley
BINKLEY & HOLMES, INC. CONSULTING ENGINEERS

LARRY M. BARFIELD 39237 REGISTERED PROFESSIONAL ENGINEER

KENNETH R. LINDSEY 51158 REGISTERED PROFESSIONAL ENGINEER

APPROVED:

Walter F. Williams — WASTEWATER
PAVING
Jerry Dinkins — CONSTRUCTION
WATER
STORM SEWER
ASST. DIRECTOR
Jimmie D. Dinkins — DIRECTOR

DESIGNED BY:	K.K.S.	SCALE:	NONE
DRAWN BY:	M.V.S.	DATE:	APRIL, 1980
CHECKED BY:	L.M.B.	DRAWING NO.	26709
SHEET		SHEET NO.	37 OF 51

LEGEND

- PROPOSED UNDER THIS CONTRACT
- UNDER SEPERATE CONTRACT OR EXISTING
- EXISTING CONDUITS
- PROPOSED ELECTRICAL DISTRIBUTION

NOTES

1. REMOVE EXISTING SPARE 600 AMP, 3Ø BREAKER FROM POWER CENTER NO.1 SECONDARY DISTRIBUTION COMPARTMENT "3C" AND INSTALL IN POWER CENTER NO.2 SECONDARY DISTRIBUTION COMPARTMENT "3D". REPLACE TRIP SETTING WITH 300 AMP TRIP SETTING AND EXTEND THE FEEDER (3-350 MCM) TO AUTOMATIC TRANSFER SWITCH IN LOADING BUILDING.
2. EXISTING CONDUIT STUB OUT.
3. PROPOSED SWITCH GEAR SECTION FOR POWER CENTER NO.3 2400 VOLT INCOMING FEEDER. (EXISTING)
4. EXTEND EXISTING 2-4" CONDUIT STUBOUT TO EPB #8
5. CONTRACTOR SHALL VERIFY ALL EXISTING UNDERGROUND FACILITIES BEFORE EXCAVATION
6. PROVISION FOR FUTURE CRT. AND PROPOSED PRINTER IN SHIFT SUPERVISORS OFFICE. WIRING BETWEEN PRINTER AND FUTURE CRT PROVISION SHALL BE DONE PER PROCESS CONTROL REQUIREMENTS.

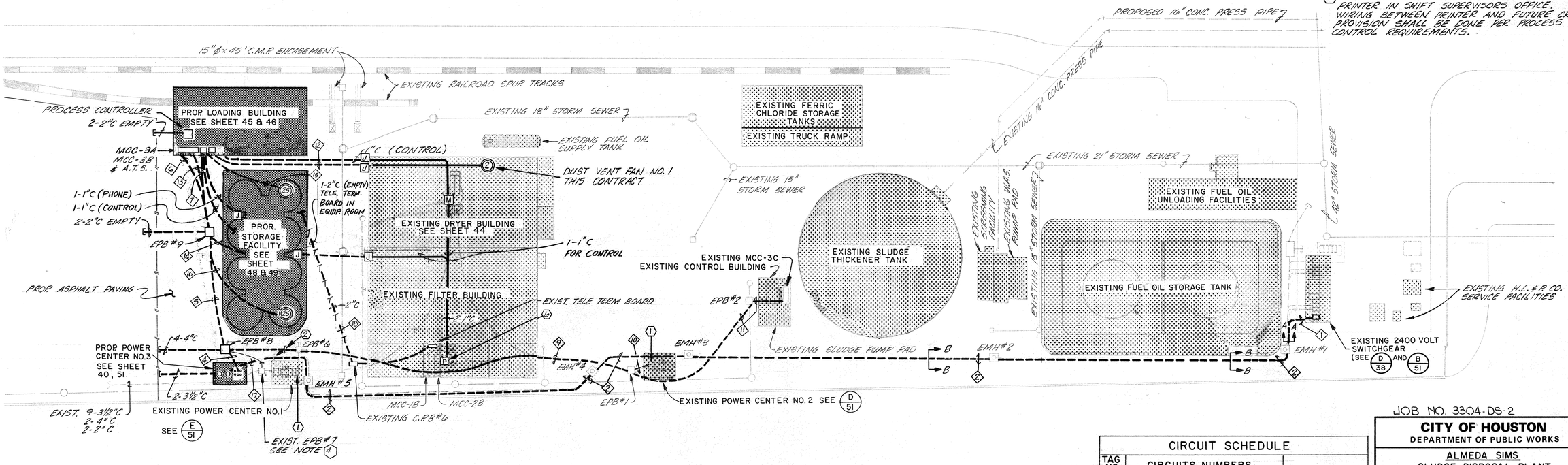

ELECTRICAL SITE PLAN (A 38)

SCALE: 1" = 30'-0"

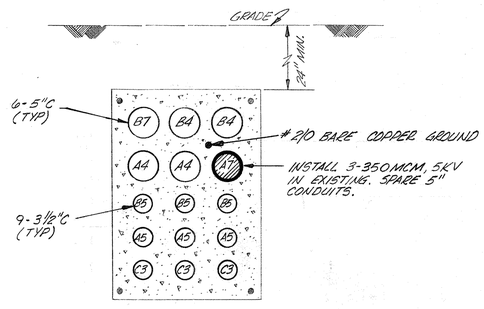

EXISTING DUCT BANK SECTION - "A-A" (B 38)

N.T.S.

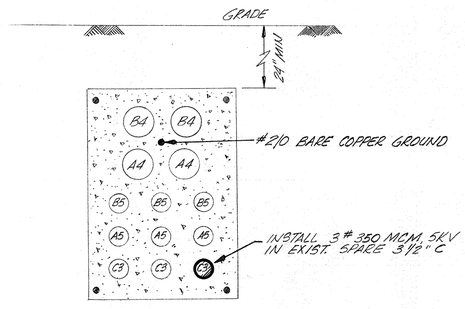

EXISTING DUCT BANK SECTION - "B-B" (C 38)

N.T.S.

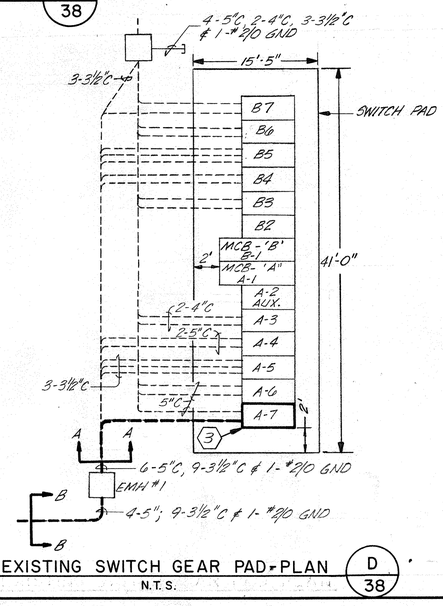

EXISTING SWITCH GEAR PAD PLAN (D 38)

N.T.S.

W. W. RECORDS MICROFILM DATE 7-21-83

CIRCUIT SCHEDULE

TAG NO.	CIRCUITS NUMBERS CONDUIT AND CABLES	REMARKS
1	3-350 MCM, 5KV IN EXISTING 5"C SPARE A-T	FROM EXISTING S.W. GEAR SECTION "A" SEE SECTION "A-A"
2	3-350 MCM, 5KV IN EXISTING 3½"C (SPARE C-3)	SEE SECTION "B-B"
3	3-350 MCM 5KV IN 1-3½"C 1-3½"C SPARE AND #2/0 GND	TIE 3½"C TO EXIST 3½" CONDUIT STUB OUT
4	3A-1 IN 2-4"C; 3C-1 IN 1-4"C AND 4-4"C SPARE	3A-1 TO MCC-3A AND 3C-1 TO EXIST. MCC-3C
5	3A-1 IN 2-4"C; 3-350 MCM AND #2 GND IN 1-4"C (FROM POWER CENTER #2) AND 2-4"C SPARE	
6	3A-1 IN 2-4"C AND 1-4"C SPARE	TO MCC-3A
7	3-350 MCM AND #2 GND IN 1-4"C & 1-4" C SPARE	TO AUTOMATIC TRANSFER SWITCH
8	3C-1 IN 1-4"C, 3-350 MCM & #2 GND IN 1-4"C (FROM P.C. #2 TO A.T.S.) AND 1-4"C SPARE	TIE 4" CONDUITS TO EXIST. 3-4" CONDUIT STUB OUT
9	INSTALL 3C-1 AND 3-350 MCM & 2 GND (FROM P.C. #2 TO A.T.S.) IN EXIST. 4" SPARE CONDUITS	3-4" CONDUITS EXISTING
10	INSTALL 3-350 MCM & #2 GND IN EXIST. 1-4"C (TO A.T.S.)	SEE NOTE 1
11	3C-1 IN EXIST. 1-4"C	TO EXIST. MCC-3C
12	3B-4-IN 1"C & 1-1"C (SPARE)	TO DRYER BLDG
13	3B-8 IN 1"C, 3A-10 IN 1-1"C, 3A-11 IN 3/4"C, 3A-12 IN 1"C, 3A-16 IN 3/4"C, AND 2-2" C SPARE	TO STORAGE FACILITY
14	3B-8 IN 1"C AND 3A-12 IN 1"C	
15	3A-8 IN 1"C AND 3A-9 IN 3/4"C	
16	3A-10 IN 1"C AND 3A-11 IN 3/4"C	
17	3-350 MCM 5KV IN 1-3½"C AN 1-3½"C SPARE	4-3½"C FROM EMH #5 TO EXIST. UP TO STUB OUT
18	1-2"C EMPTY TELEPHONE	FROM EXIST. CPB #6 TO TELE. TERM. BD. IN EQUIP. ROOM

JOB NO. 3304-DS-2

CITY OF HOUSTON
DEPARTMENT OF PUBLIC WORKS

ALMEDA SIMS
SLUDGE DISPOSAL PLANT
PNEUMATIC CONVEYING, STORAGE AND LOADING FACILITIES

ELECTRICAL SITE PLAN

RECOMMENDED FOR APPROVAL:
Kenneth R. Lindsey
BINKLEY & HOLMES, INC. CONSULTING ENGINEERS

LARRY M. BARFIELD 38337 REGISTERED PROFESSIONAL ENGINEER
KENNETH R. LINDSEY 61158 REGISTERED PROFESSIONAL ENGINEER

APPROVED:
Walter Williams — WASTEWATER
Jerry Dickens — PAVING
WATER — CONSTRUCTION
STORM SEWER
ASST. DIRECTOR
Jimmie L. Dodson — DIRECTOR

DESIGNED BY: K.K.S. SCALE: 1" = 30'-0"
DRAWN BY: M.V.S. DATE: APRIL, 1980
CHECKED BY: L.M.B. DRAWING NO. 26709
SHEET SHEET NO. 38 OF 51

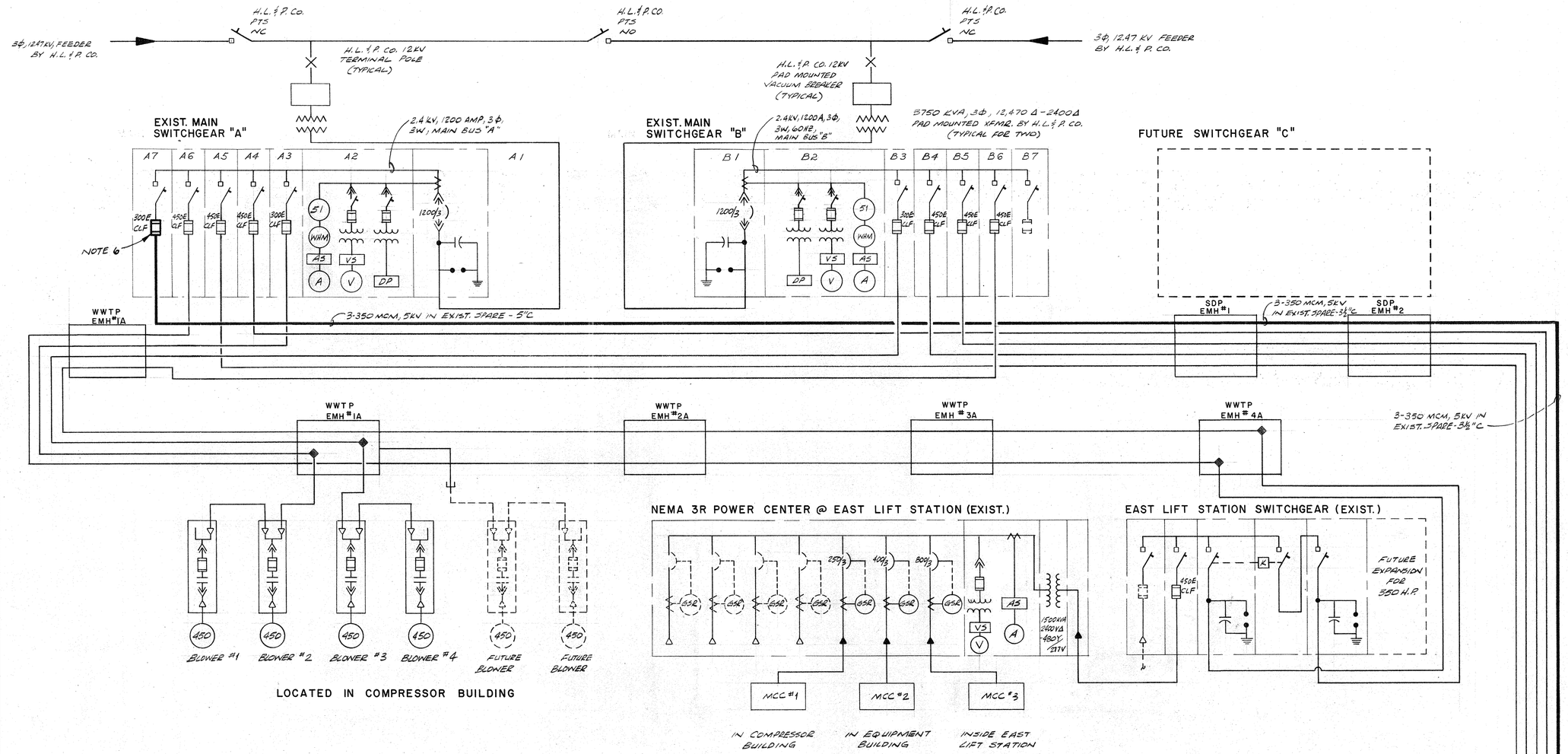

NOTES :

1. DARK BROAD LINES THIS CONTRACT, THIN LIGHT LINES EXISTING, DASH LINES FOR FUTURE.
2. EXISTING 2-3½" CONDUIT STUB OUT AND #2/0 BARECOPPER GND. WIRE FROM EMH NO.5 SEE SITE PLAN.
3. REMOVE EXISTING 600 AMP, 3Φ, SPARE BREAKER FROM POWER CENTER NO.1. SECONDARY DISTRIBUTION COMPARTMENT "3C" AND INSTALL IN POWER CENTER NO.2 SECONDARY DISTRIBUTION COMPARTMENT "3D" SPACE. REPLACE TRIP SETTING W/ 300 A TRIP.
4. 480 VOLT SERVICE TO EXISTING "MCC-2C" AT SLUDGE PUMP PAD CONTROL BUILDING TO BE PROVIDED FROM NEW POWER CENTER NO.3 (FOR CCT. #3C-1). STANDBY POWER FROM POWER CENTER NO.2 BY OTHERS. REPLACE NAMEPLATE TO READ "MCC-3C" INSTEAD OF "MCC-2C".
5. EXISTING 4" CONDUITS STUB BED OUT. SEE SITE PLAN
6. INSTALL 300 A CURRENT LIMITING FUSE IN THE EXISTING 2400 VOLT SWITCHGEAR.
7. BARECOPPER GROUND WIRE #2/0 SHALL BE CONNECTED TO THE EXISTING #2/0 GROUND WIRE AT THE CONDUIT STUB OUT. GROUND CONTINUITY SHALL BE VERIFIED/TESTED UP TO THE MAIN SWITCH GEAR "A".

JOB NO. 3304-DS-2

CITY OF HOUSTON
DEPARTMENT OF PUBLIC WORKS

ALMEDA SIMS
SLUDGE DISPOSAL PLANT
PNEUMATIC CONVEYING, STORAGE AND LOADING FACILITIES

POWER DISTRIBUTION KEY PLAN

RECOMMENDED FOR APPROVAL:
Kenneth R. Binkley
BINKLEY & HOLMES, INC. CONSULTING ENGINEERS

LARRY M. BARFIELD 38937 REGISTERED PROFESSIONAL ENGINEER

JAMES W. LINNEY 61138 REGISTERED PROFESSIONAL ENGINEER

APPROVED:

WASTEWATER
WATER
PAVING
CONSTRUCTION
STORM SEWER
ASST. DIRECTOR
DIRECTOR

W. W. RECORDS MICROFILM DATE 7-21-83

DESIGNED BY: K. K. S. SCALE: NONE
DRAWN BY: L. I. DATE: APRIL, 1980
CHECKED BY: L.M.B. DRAWING NO. 26709
SHEET SHEET NO. 39 OF 51

NEMA 3R, POWER CENTER NO. 3

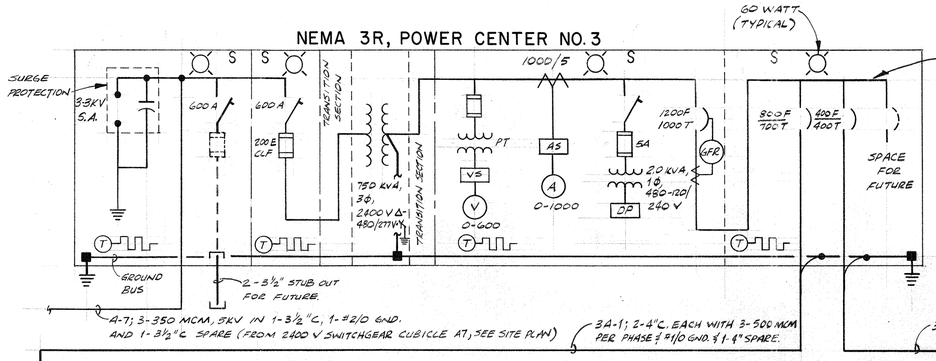

NOTES

1. PACKAGE UNIT FURNISHED BY EQUIPMENT SUPPLIER.
2. INSTALL NEMA-4X, DISCONNECT SWITCH, NON-FUSIBLE, 30 A., 3 POLE ON ROOF TOP.
3. FEEDER 3C-1 SHALL CONNECT TO LINE SIDE OF NORMALLY CLOSED INCOMING BREAKER IN MCC-3C. SEE (F/51)
4. CONTROL WIRING & INTERLOCKS TO PROGRAMMABLE CONTROLERS I/O UNIT (MULTIPLEXERS). CONTRACTOR SHALL COORDINATE WITH MECHANICAL EQUIP. & PNEUMATIC CONTROL SYSTEM SUPPLIERS FOR EXACT NUMBER OF CONTROL WIRES REQUIRED.
5. CONTROL WIRING TO TERMINAL STRIPS IN CUBICLE 1D OF MCC-"3A."
6. MOTOR HORSEPOWER SIZES SHOWN ARE APPROXIMATE. EXACT MOTOR REQUIREMENTS SHALL BE COORDINATED WITH SUPPLIERS OF MECHANICAL EQUIPMENT.

MOTOR CONTROL CENTER "3A"

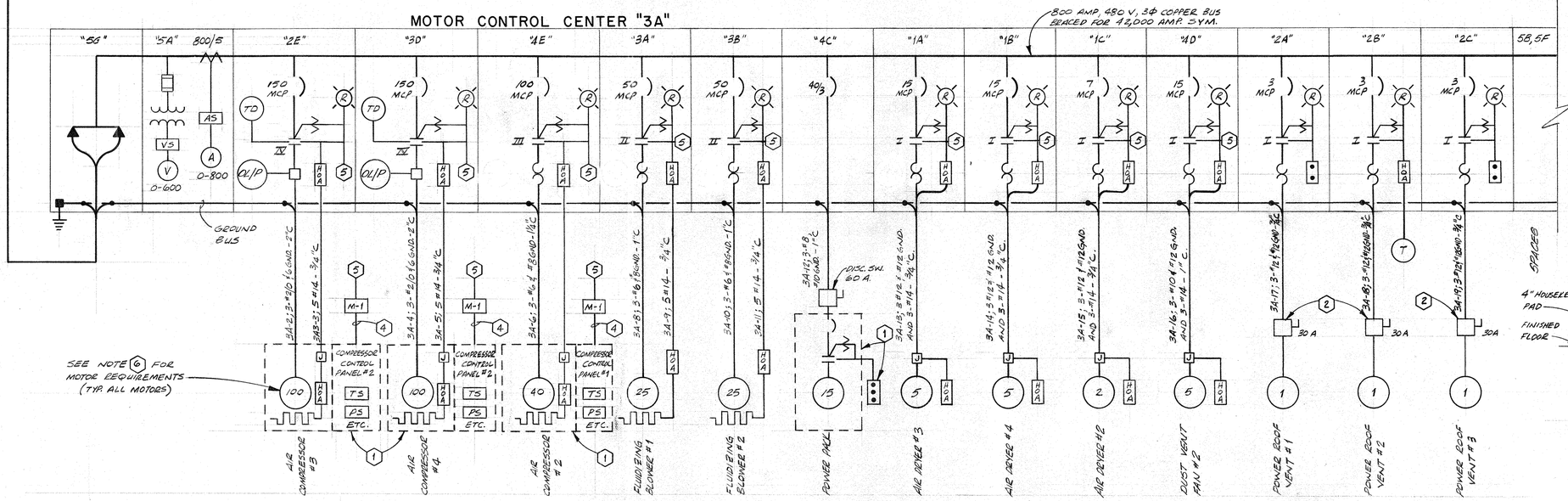

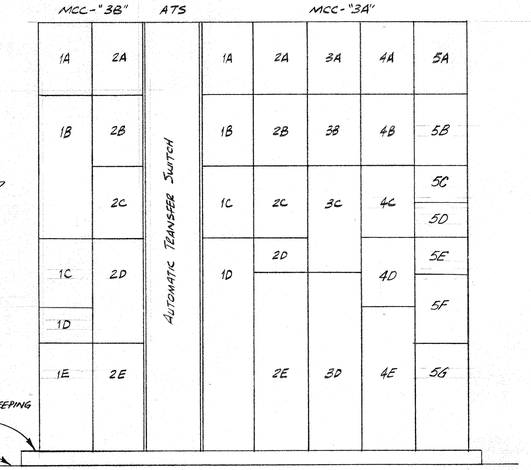

MCC-"3A", A.T.S. AND MCC-"3B" - ELEVATION (A/40)

N.T.S.

JOB NO. 3304-DS-2

MOTOR CONTROL CENTER "3B"

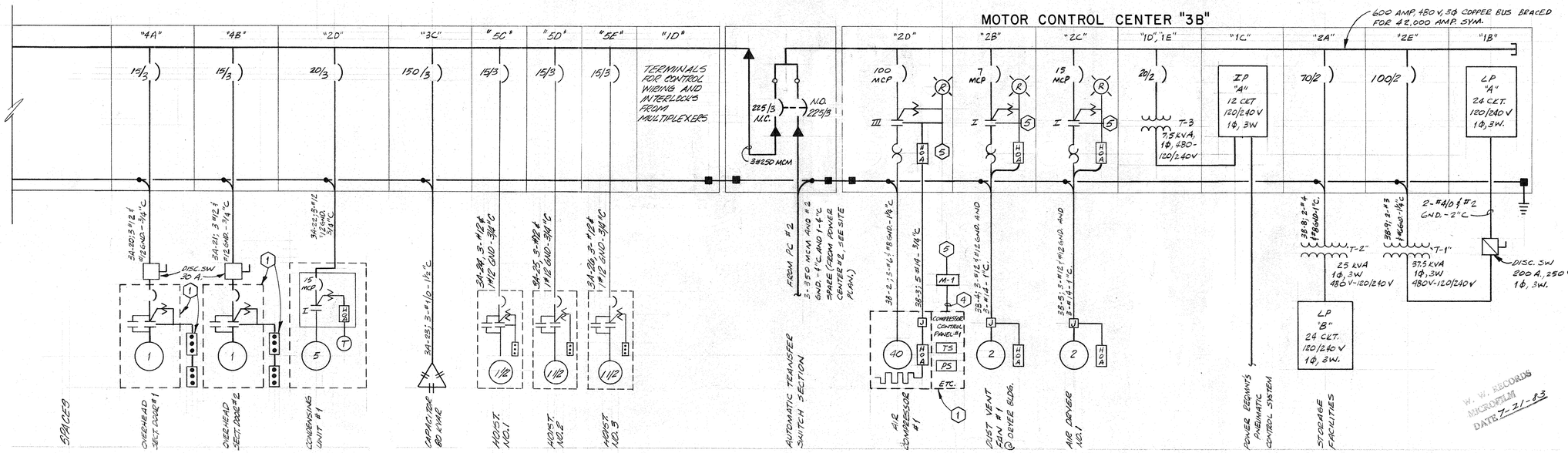

W. W. RECORDS MICROFILM DATE 7-21-83

CITY OF HOUSTON
DEPARTMENT OF PUBLIC WORKS

ALMEDA SIMS
SLUDGE DISPOSAL PLANT
PNEUMATIC CONVEYING, STORAGE AND LOADING FACILITIES

ELECTRICAL

ONE LINE DIAGRAM

RECOMMENDED FOR APPROVAL:
Kenneth R. Binkley
BINKLEY & HOLMES, INC. CONSULTING ENGINEERS

LARRY M. BARFIELD 38371 REGISTERED PROFESSIONAL ENGINEER

KENNETH R. LINSEY 61158 REGISTERED PROFESSIONAL ENGINEER

APPROVED:
Walter Williams — WASTEWATER
Jerry Perkins — PAVING CONSTRUCTION
WATER
STORM SEWER
ASST. DIRECTOR
Jimmie Schindewolf — DIRECTOR

DESIGNED BY: K.K.S. SCALE: NONE
DRAWN BY: L.T. DATE: APRIL, 1980
CHECKED BY: L.M.B. DRAWING NO. 26709
SHEET SHEET NO. 40 OF 51

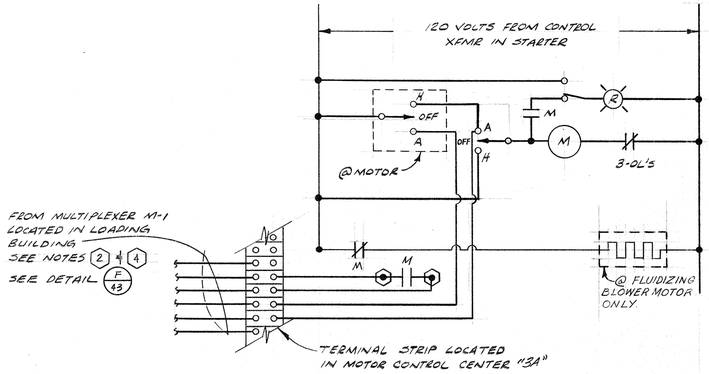

DUST VENT FANS
FLUIDIZING AIR BLOWERS — A / 41

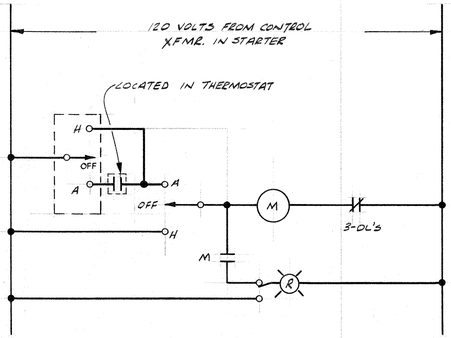

POWER ROOF VENTILATOR # 2 (THERMOSTAT CONTROLLED) — B / 41

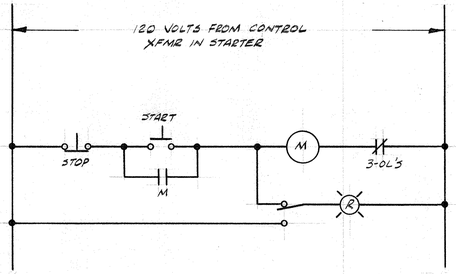

GENERAL CONTROL
POWER ROOF VENTILATORS # 1 & # 3 — D / 41

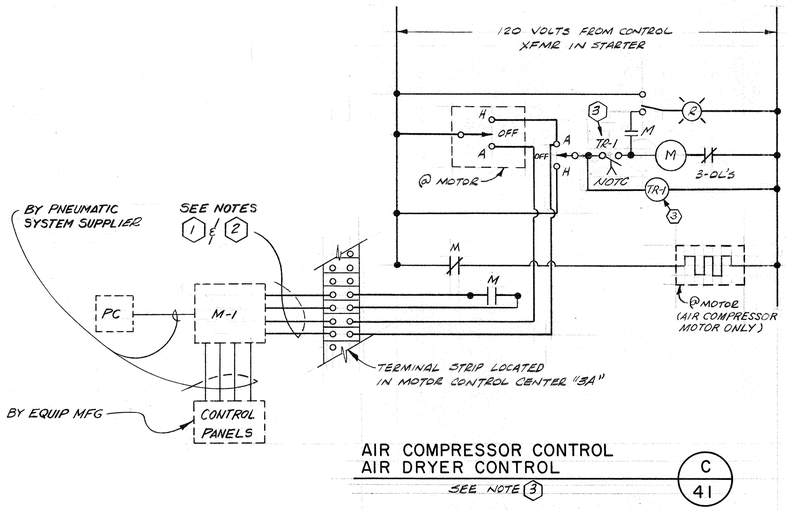

AIR COMPRESSOR CONTROL
AIR DRYER CONTROL
SEE NOTE 3 — C / 41

NOTES

1. CONTRACTOR SHALL COORDINATE WITH THE SUPPLIER OF AIR COMPRESSORS TO DETERMINE THE EXACT NUMBER OF WIRES TO BE RUN FROM THE AIR COMPRESSOR CONTROL TO THE MULTIPLEXER AND TERMINAL STRIPS IN THE MOTOR CONTROL CENTERS.
2. CONTRACTOR SHALL COORDINATE WITH THE SUPPLIER OF THE PROGRAMMABLE CONTROLLER SYSTEM TO DETERMINE THE EXACT NUMBER OF WIRES TO BE RUN FROM THE MULTIPLEXER UNIT TO THE TERMINAL STRIPS IN THE MOTOR CONTROL CENTERS.
3. TIME DELAYED STARTING IS ONLY FOR COMPRESSOR NO.3 & 4. (100 HP)
4. THE FLUIDIZING AIR BLOWERS AND THE DUST VENT FANS ARE STARTED AND STOPPED AS PART OF CONVEYING SEQUENCE. HOWEVER, THEY CAN ALSO BE MANUALLY STARTED FROM THE CRT KEYBOARD LOCATED IN LOADING BUILDING.

JOB NO. 3304-DS-2

CITY OF HOUSTON
DEPARTMENT OF PUBLIC WORKS

ALMEDA SIMS
SLUDGE DISPOSAL PLANT
PNEUMATIC CONVEYING, STORAGE AND LOADING FACILITIES

ELECTRICAL CONTROL SCHEMATICS

RECOMMENDED FOR APPROVAL:
Kenneth Binkley
BINKLEY & HOLMES, INC. CONSULTING ENGINEERS

LARRY M. BARFIELD 39337 REGISTERED PROFESSIONAL ENGINEER
KENNETH F. LINDSEY 31159 REGISTERED PROFESSIONAL ENGINEER

APPROVED:
WASTEWATER — Walter Williams
WATER
STORM SEWER — Richard C. Lore, ASST. DIRECTOR
PAVING — Jerry Rinkins, CONSTRUCTION
Jimmie L. Lindsey, DIRECTOR

W. W. RECORDS MICROFILM DATE 7-21-83

DESIGNED BY: D. P. — SCALE: NONE
DRAWN BY: L. I. — DATE: APRIL, 1980
CHECKED BY: L.M.B. — DRAWING NO. 26709
SHEET — SHEET NO. 41 OF 51

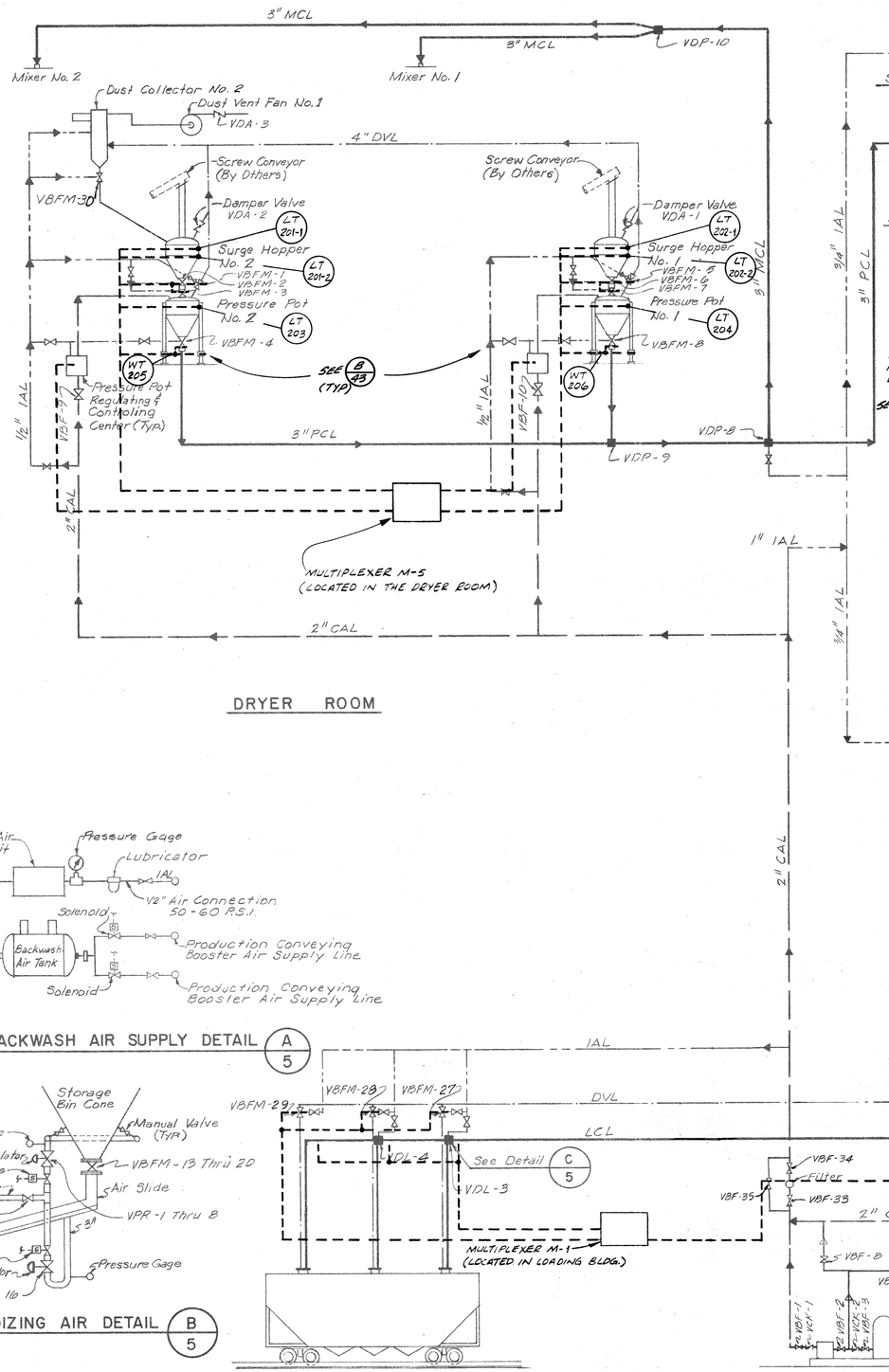

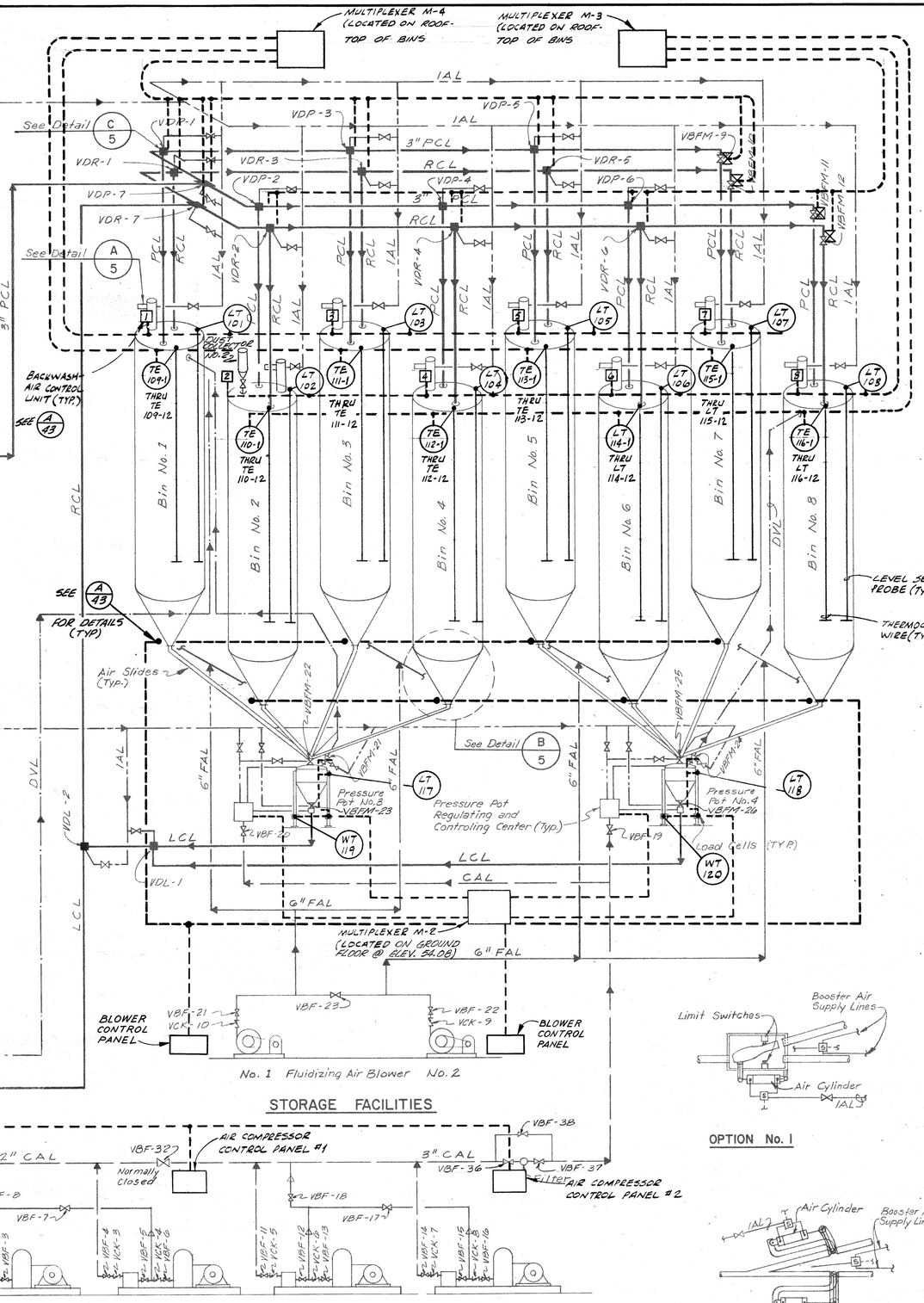

LEGEND

MCL	Mixer Conveying Line
PCL	Production Conveying Line
LCL	Loading Conveying Line
RCL	Recirculation Conveying Line
DVL	Dust Vent Line
CAL	Conveying Air Line
FAL	Fluidizing Air Line
IAL	Instrument Air Line
----	Electrical Signal
■	Diverter Valve
⋈	Damper Valve
⋈	Butterfly Valve (Man.)
⋈	Check Valve
⋈	Pressure Regulating Valve
⋈	Solenoid Valve
→	Normal Flow Direction
→	Alternate Flow Direction
5	Solenoid Switch
VDP	Diverter Valve Prod. Conv.
VDR	Diverter Valve Recirculation
VDL	Diverter Valve Loading
VBFM	Butterfly Valve Material Handling
VBF	Butterfly Valve

Note: 1. Booster Air Supply Lines (BAL) Are Parallel To All Conveying Lines But Are Not Shown.

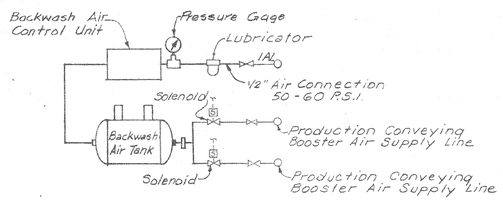

BACKWASH AIR SUPPLY DETAIL A/5

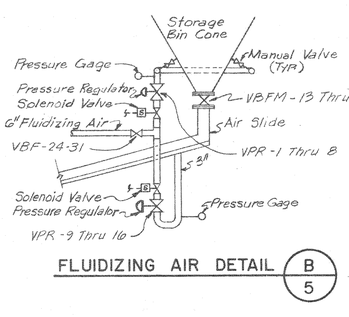

FLUIDIZING AIR DETAIL B/5

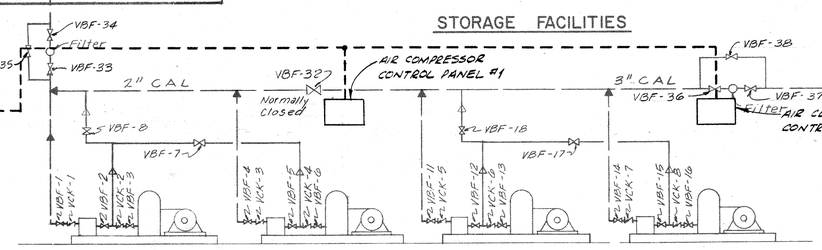

STORAGE FACILITIES

OPTION No. 1

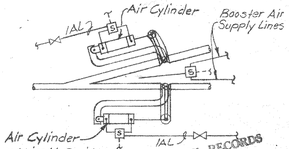

OPTION No. 2

DIVERTER VALVE DETAIL C/5

LOADING FACILITIES

JOB NO. 3304-DS-2

CITY OF HOUSTON
DEPARTMENT OF PUBLIC WORKS

ALMEDA SIMS
SLUDGE DISPOSAL PLANT
PNEUMATIC CONVEYING, STORAGE AND LOADING FACILITIES

PNEUMATIC CONVEYING SYSTEM INSTRUMENTATION SCHEMATIC

RECOMMENDED FOR APPROVAL:
Kenneth R. Binkley
BINKLEY & HOLMES, INC. CONSULTING ENGINEERS

STATE OF TEXAS — LARRY M. BARFIELD — 39337 — REGISTERED PROFESSIONAL ENGINEER

STATE OF TEXAS — KENNETH V. LINDSEY — 51158 — REGISTERED PROFESSIONAL ENGINEER

APPROVED:

Walter Williams — WASTEWATER	PAVING
WATER	Jerry Jenkins — CONSTRUCTION
STORM SEWER	
ASST. DIRECTOR	Jimmie Schindewolf — DIRECTOR

W. W. RECORDS MICROFILM DATE 7-21-83

DESIGNED BY: D. P	SCALE: NONE
DRAWN BY: L. I.	DATE: APRIL 1980
CHECKED BY: L. M. B.	DRAWING NO. 26709
SHEET	SHEET NO. 42 OF 51

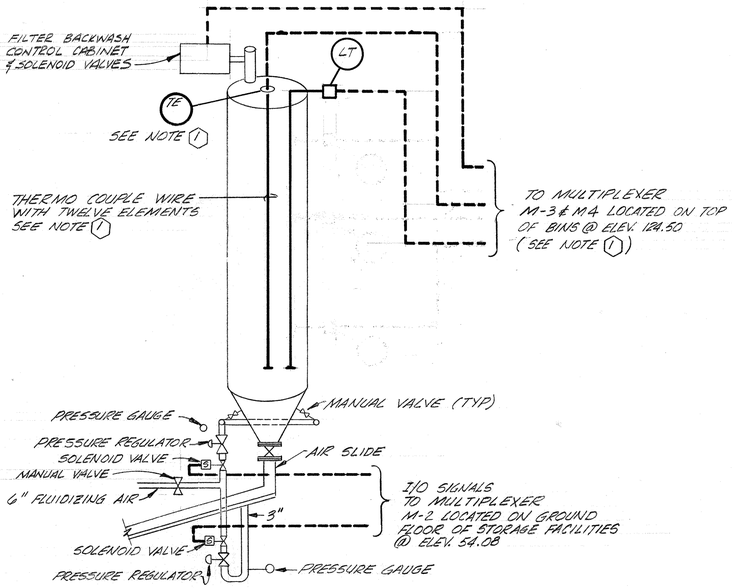

STORAGE BIN A / 43
(TYPICAL FOR BINS 1 THRU 8)

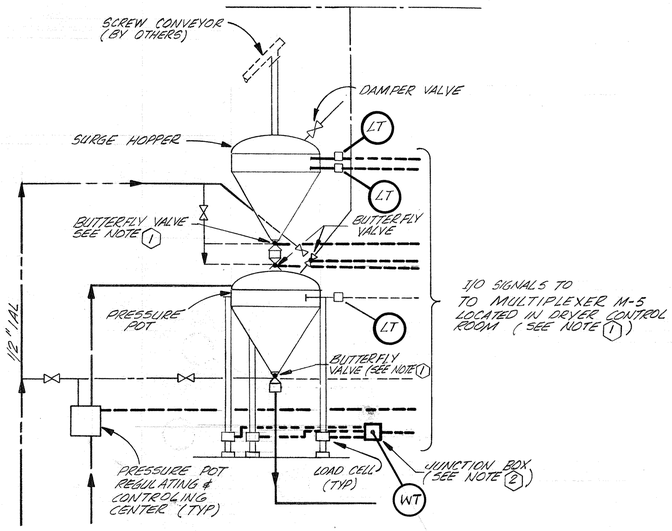

PRESSURE POT AND SURGE HOPPER B / 43
(TYPICAL FOR PRESSURE POT #1 & 2; SURGE HOPPER #1 & 2)

NOTES

1. SEE SHEET #42 FOR MULTIPLEXER NUMBER, INSTRUMENT NUMBERS AND VALVE NUMBERS.
2. THE JUNCTION BOX AVERAGES THE SIGNALS PROVIDED BY THE THREE LOAD CELLS
3. CONDUIT TO BE PROVIDED FOR FUTURE EXTENSION OF CONTROL SYSTEM TO PROPOSED MAINTENANCE FACILITIES.

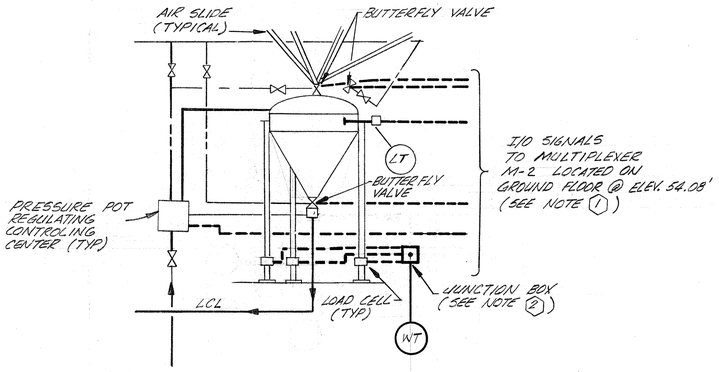

PRESSURE POT C / 43
(TYPICAL PRESSURE POTS #3 & 4)

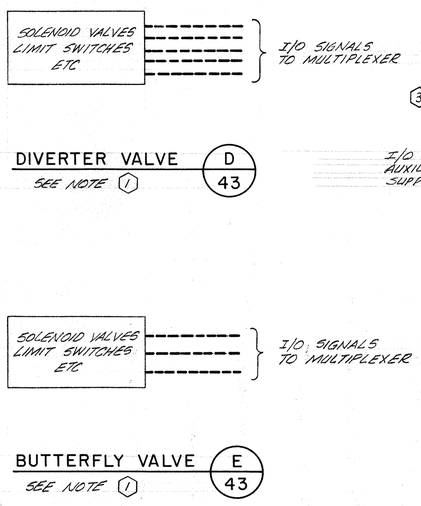

DIVERTER VALVE D / 43
SEE NOTE 1

BUTTERFLY VALVE E / 43
SEE NOTE 1

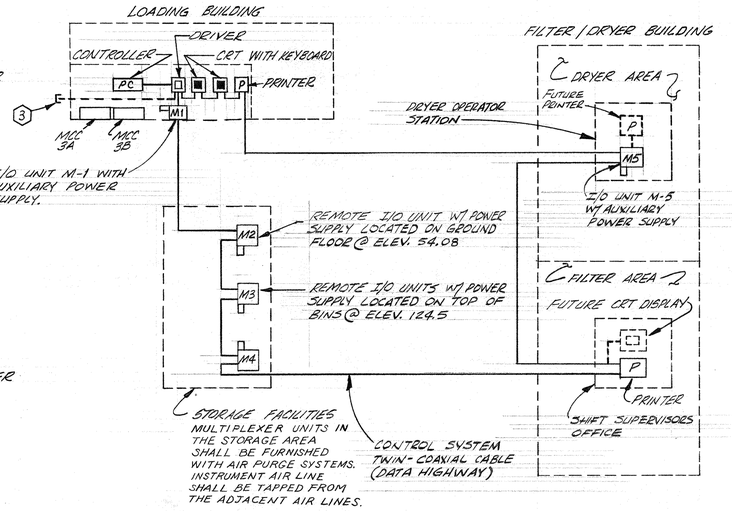

PLANT CONTROL & MONITORING SYSTEM LAYOUT F / 43

W. W. RECORDS
MICROFILM
DATE 7-21-83

JOB NO. 3304-DS-2

CITY OF HOUSTON
DEPARTMENT OF PUBLIC WORKS

ALMEDA SIMS
SLUDGE DISPOSAL PLANT
PNEUMATIC CONVEYING, STORAGE AND LOADING FACILITIES

PNEUMATIC CONVEYING SYSTEM MISCELLANEOUS INSTRUMENTATION DETAILS

RECOMMENDED FOR APPROVAL:
Kenneth R. Finchey
BINKLEY & HOLMES, INC. CONSULTING ENGINEERS

APPROVED:

WASTEWATER	PAVING
WATER	CONSTRUCTION
STORM SEWER	
ASST. DIRECTOR	DIRECTOR

DESIGNED BY: D.P. SCALE: NONE
DRAWN BY: M.V.S. DATE: APRIL, 1980
CHECKED BY: L.M.B. DRAWING NO. 26709
SHEET SHEET NO. 43 OF 51

NOTES

1. DARK BROAD LINES THIS CONTRACT. THIN LIGHT LINES EXISTING. DASH LINES FOR FUTURE.
2. MULTIPLEXER FURNISHED AND INSTALLED BY PROCESS CONTROL SYSTEM SUPPLIER. 1-1" CONDUIT SHALL BE INSTALLED BY ELECTRICAL CONTRACTOR FROM PROCESS CONTROLLER (@ LOADING BUILDING) TO MULTIPLEXER (I/O UNIT) IN CONTROL ROOM. EXACT LOCATION OF FLOOR PENETRATION SHALL BE COORDINATED WITH CONTROL SYSTEM SUPPLIER. INSTRUMENTATION CONDUITS AND WIRING BETWEEN MULTIPLEXER (M-4) AND PRESSURE POTS SHALL BE DONE PER PNEUMATIC CONVEYING SYSTEM AND PROCESS CONTROL SYSTEM REQUIREMENTS.

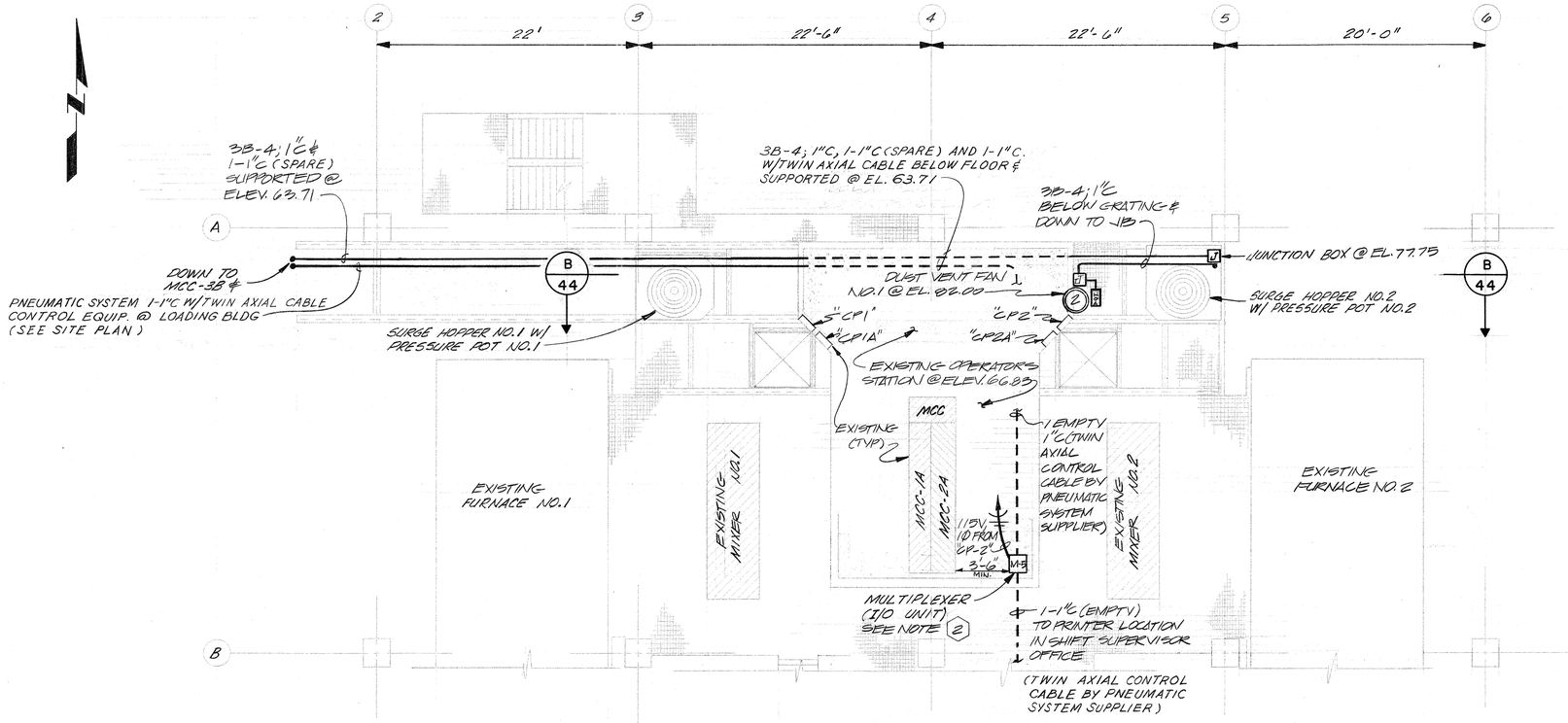

ELECTRICAL PLAN A/44
SCALE : 3/16" = 1'-0"

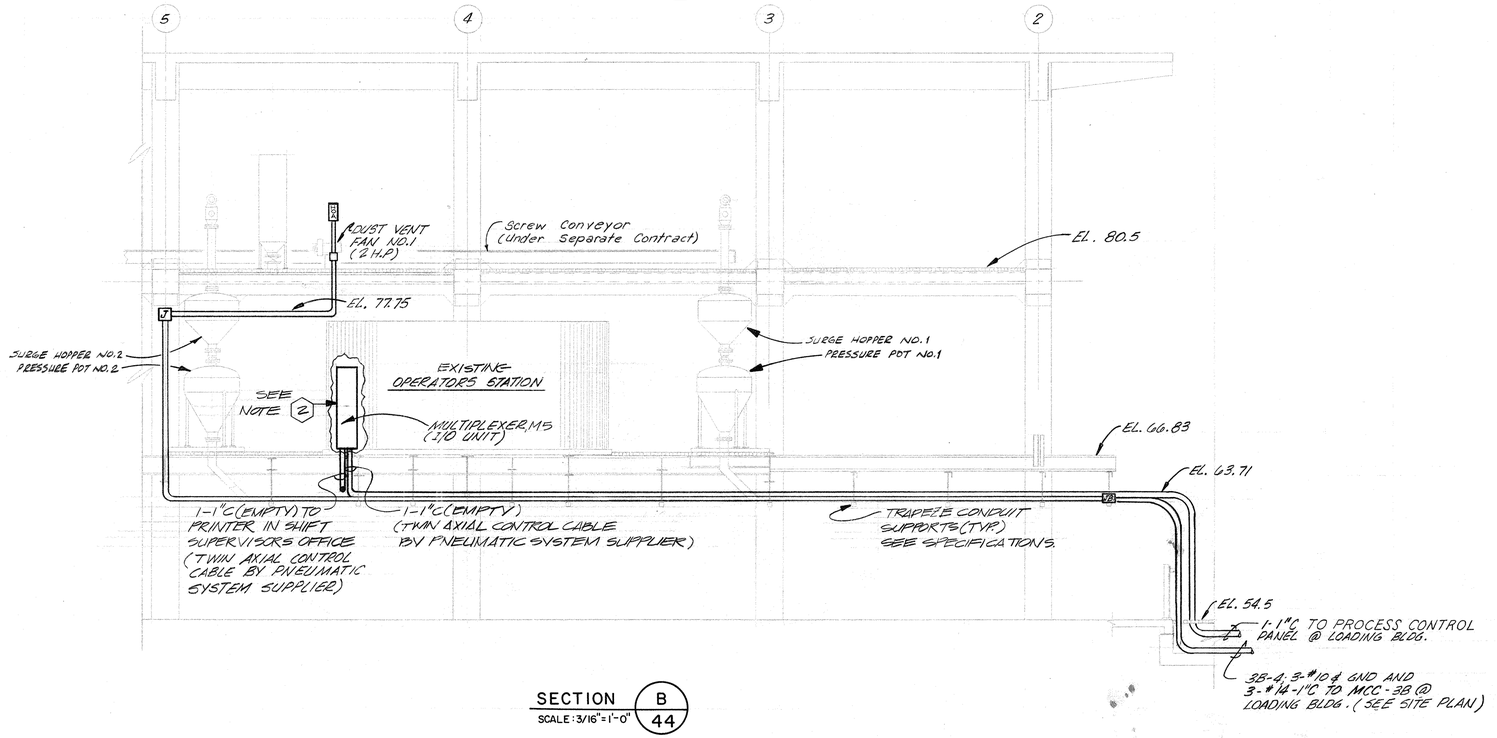

SECTION B/44
SCALE : 3/16" = 1'-0"

W. W. RECORDS MICROFILM DATE 7-21-83

JOB NO. 3304-DS-2

CITY OF HOUSTON
DEPARTMENT OF PUBLIC WORKS

ALMEDA SIMS
SLUDGE DISPOSAL PLANT
PNEUMATIC CONVEYING, STORAGE AND LOADING FACILITIES

DRYER BUILDING
FACILITIES
ELECTRICAL PLAN AND SECTION

RECOMMENDED FOR APPROVAL:
Kenneth R. Binkley
BINKLEY & HOLMES, INC. CONSULTING ENGINEERS

STATE OF TEXAS — LARRY M. GARFIELD — 58137 — REGISTERED PROFESSIONAL ENGINEER
STATE OF TEXAS — KENNETH R. LINDSEY — 31158 — REGISTERED PROFESSIONAL ENGINEER

APPROVED:

Walter Williams — WASTEWATER	PAVING
WATER	Jerry Hinkins — CONSTRUCTION
STORM SEWER	
Asst. Director	Director

DESIGNED BY: K.K.S.	SCALE: 3/16" = 1'-0"
DRAWN BY: L.I.	DATE: APRIL, 1980
CHECKED BY: L.M.B.	DRAWING NO. 26709
SHEET	SHEET NO. 44 OF 51

NOTES

1. CONDUITS TURNED UP THROUGH CEILING SLAB TO MCC-3A, MCC-3B AND AUTOMATIC TRANSFER SWITCH.
2. EXHAUST FAN #1 CONTROLLED BY THERMOSTAT.
3. INSTALL LIGHTING FIXTURE ON WALL, 10'-0" ABOVE FLOOR. FIXTURE SHALL BE CLEAR OF PIPES, EQUIPMENT AND STRUCTURAL OBSTRUCTIONS
4. ALL WIRING, EQUIPMENT, DEVICES AND LIGHTING FIXTURES IN LOADING AREA EXCEPT EQUIPMENT ROOM SHALL BE PER ARTICLE 500-5(b) CLASS II DIVISION II.
5. COMPRESSOR CONTROL PANEL FURNISHED BY EQUIPMENT SUPPLIER. WIRING BETWEEN MULTIPLEXER M-5 (IN CONTROL ROOM) AND BLOWER CONTROL PANEL NO.1 AND NO.2 SHALL BE DONE PER PROGRAMMABLE CONTROLLER REQUIREMENTS.
6. STARTERS AND CONTROL DEVICES FOR AIR CONDITIONING EQUIPMENT FURNISHED BY EQUIPMENT SUPPLIER

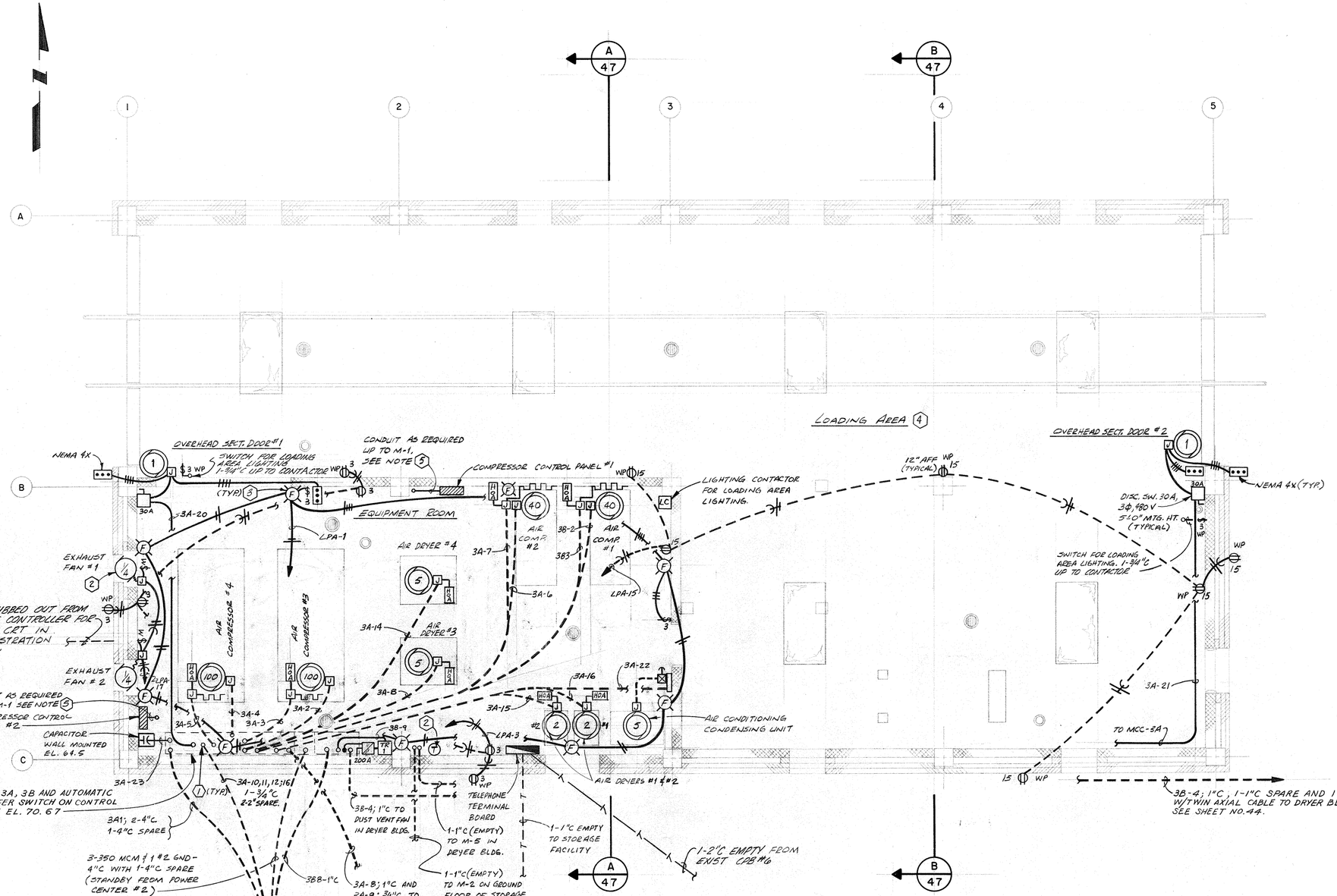

GROUND FLOOR ELECTRICAL PLAN (A/45)
SCALE: 1/4" = 1'-0"

W. W. RECORDS MICROFILM DATE 7-21-83

JOB NO. 3304-DS-2

CITY OF HOUSTON
DEPARTMENT OF PUBLIC WORKS

ALMEDA SIMS
SLUDGE DISPOSAL PLANT
PNEUMATIC CONVEYING, STORAGE AND LOADING FACILITIES

LOADING FACILITIES GROUND FLOOR ELECTRICAL PLAN

RECOMMENDED FOR APPROVAL:
Kenneth R. Lindsey
BINKLEY & HOLMES, INC. CONSULTING ENGINEERS

STATE OF TEXAS — LARRY M. BARFIELD 38337 — REGISTERED PROFESSIONAL ENGINEER
STATE OF TEXAS — KENNETH R. LINDSEY 31158 — REGISTERED PROFESSIONAL ENGINEER

APPROVED:
WASTEWATER — Walter Williams
PAVING — Jerry Dierking
WATER
CONSTRUCTION
STORM SEWER — ASST. DIRECTOR
DIRECTOR — Jimmie Schindewolf

DESIGNED BY: K.K.S. SCALE: 1/4" = 1'-0"
DRAWN BY: L.I. DATE: APRIL, 1980
CHECKED BY: L.M.B. DRAWING NO. 26709
SHEET SHEET NO. 45 OF 51

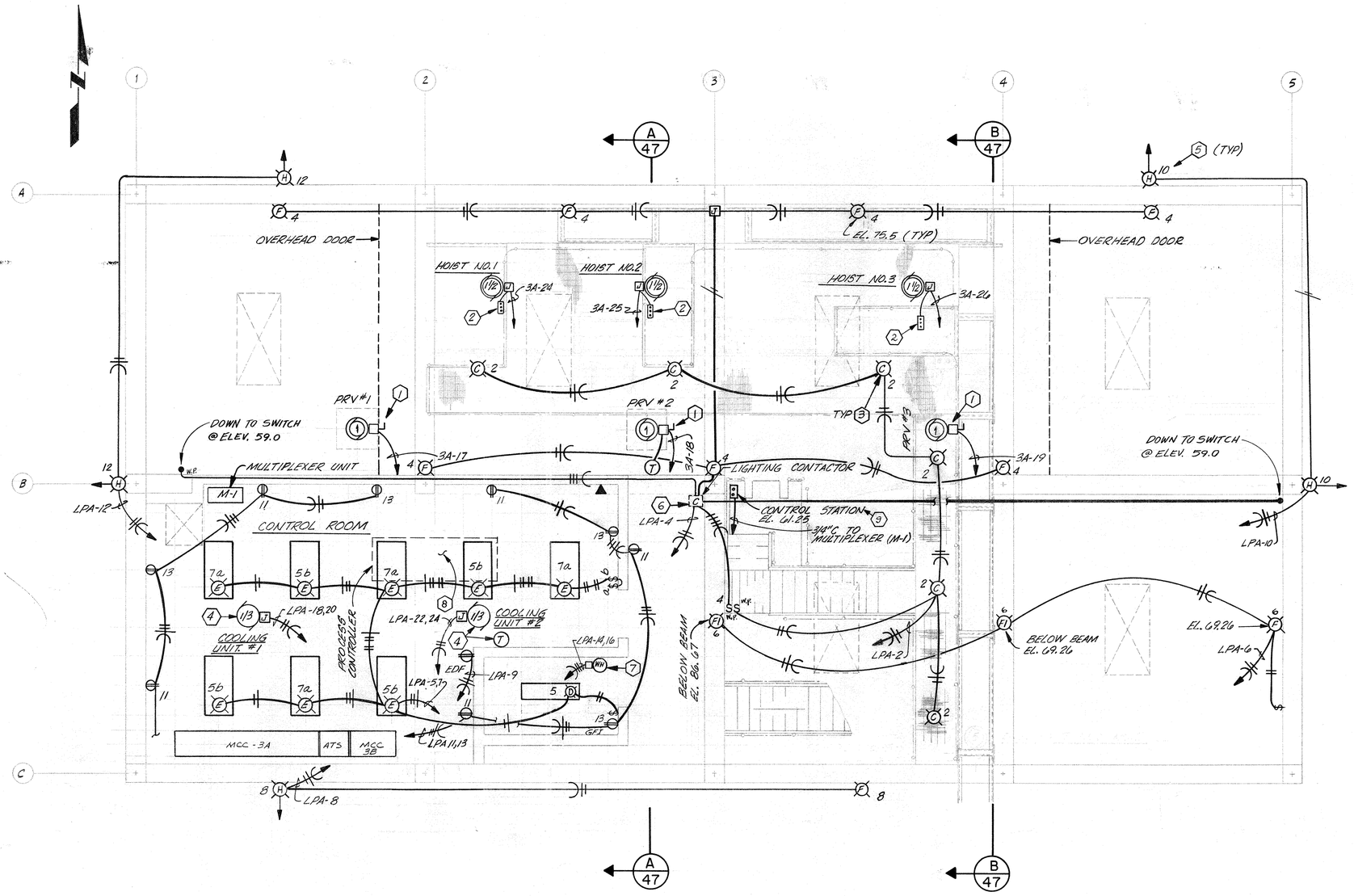

CONTROL ROOM AND ROOF ELECTRICAL PLAN (A/46)

SCALE : 1/4" = 1'-0"

NOTES

1. INSTALL NEMA 4X DISCONNECT SWITCH, 30A, 480 VOLT, 3Ø, 480 VOLT, 3Ø, NON FUSIBLE TYPE ON ROOF TOP PRV #2 SHALL BE CONTROLLED BY THERMOSTAT.
2. PUSH BUTTON STATION @ EL. 71.00. PUSH BUTTON AND CABLE SHALL BE FURNISHED BY EQUIPMENT SUPPLIER.
3. LIGHTING FIXTURE TYPE "C" SHALL BE MOUNTED ON CEILING
4. CONTROL WIRING FOR CONDENSING UNIT #1 (EQUIPMENT ROOM) AND COOLING UNIT #1 & 2 SHALL BE PER EQUIPMENT MANUFACTURER.
5. FLOOD LIGHTS SHALL BE INSTALLED AT ELEVATION 88.67 AND SHALL BE CONTROLLED BY PHOTOCELL.
6. LIGHTING CONTACTOR LOCATED ON EQUIPMENT ROOM WALL (GROUND FLOOR)
7. WATER HEATER LOCATED ON TOP OF REST ROOM CEILING SLAB.
8. PROCESS CONTROLLER WITH CRT AND PRINTER FINAL LOCATION AND ORIENTATION WILL BE DECIDED IN THE FIELD WIRING BETWEEN PROGRAMMABLE PROCESS CONTROLLER AND OTHER EQUIPMENTS SUCH AS MULTIPLEXER, REMOTE I/O DRIVERS REMOTE MULTIPLEXERS (I/O UNITS) SHALL BE DONE PER PROCESS CONTROL EQUIPMENT SUPPLIERS INSTRUCTIONS. SEE SHEETS 41, 42 AND 43.
9. CONTROL STATION FOR LOADING OPERATION AND NECESSARY WIRING SHALL BE DONE AS PER THE REQUIREMENTS OF THE PROGRAMMABLE CONTROLLER AND COORDINATED WITH THE SUPPLIER THEREOF.

GENERAL NOTES

1. ALL WIRING, EQUIPMENT, DEVICES AND LIGHTING FIXTURES IN LOADING AREA, EXCEPT CONTROL ROOM AND EQUIPMENT ROOM SHALL BE PER NATIONAL ELECTRICAL CODE ARTICLE 502 (CLASS II, DIVISION II)
2. LIGHTING PROTECTION SYSTEM SHALL BE EXTENDED FROM THE STORAGE FACILITIES TO THE ADJACENT LOADING FACILITIES AS PER "NFPA" AND UNDERWRITERS LABORATORIES.

JOB NO. 3304-DS-2

CITY OF HOUSTON
DEPARTMENT OF PUBLIC WORKS

ALMEDA SIMS
SLUDGE DISPOSAL PLANT
PNEUMATIC CONVEYING, STORAGE AND LOADING FACILITIES

LOADING FACILITIES
CONTROL ROOM AND ROOF
ELECTRICAL PLAN

RECOMMENDED FOR APPROVAL:
Kenneth R. Lindsey
BINKLEY & HOLMES, INC. CONSULTING ENGINEERS

LARRY M. BARFIELD 38812 REGISTERED PROFESSIONAL ENGINEER
KENNETH R. LINDSEY 31153 REGISTERED PROFESSIONAL ENGINEER

APPROVED:
Walter Williams — WASTEWATER
WATER
STORM SEWER
ASST. DIRECTOR
PAVING
Jerry Lindsey — CONSTRUCTION
Jimmie Dimmitt — DIRECTOR

DESIGNED BY: K.K.S. SCALE: 1/4" = 1'-0"
DRAWN BY: M.V.S. DATE: APRIL, 1980
CHECKED BY: L.M.B. DRAWING NO. 26709
SHEET SHEET NO. 46 OF 51

W. W. RECORDS
MICROFILM
DATE 7-21-83

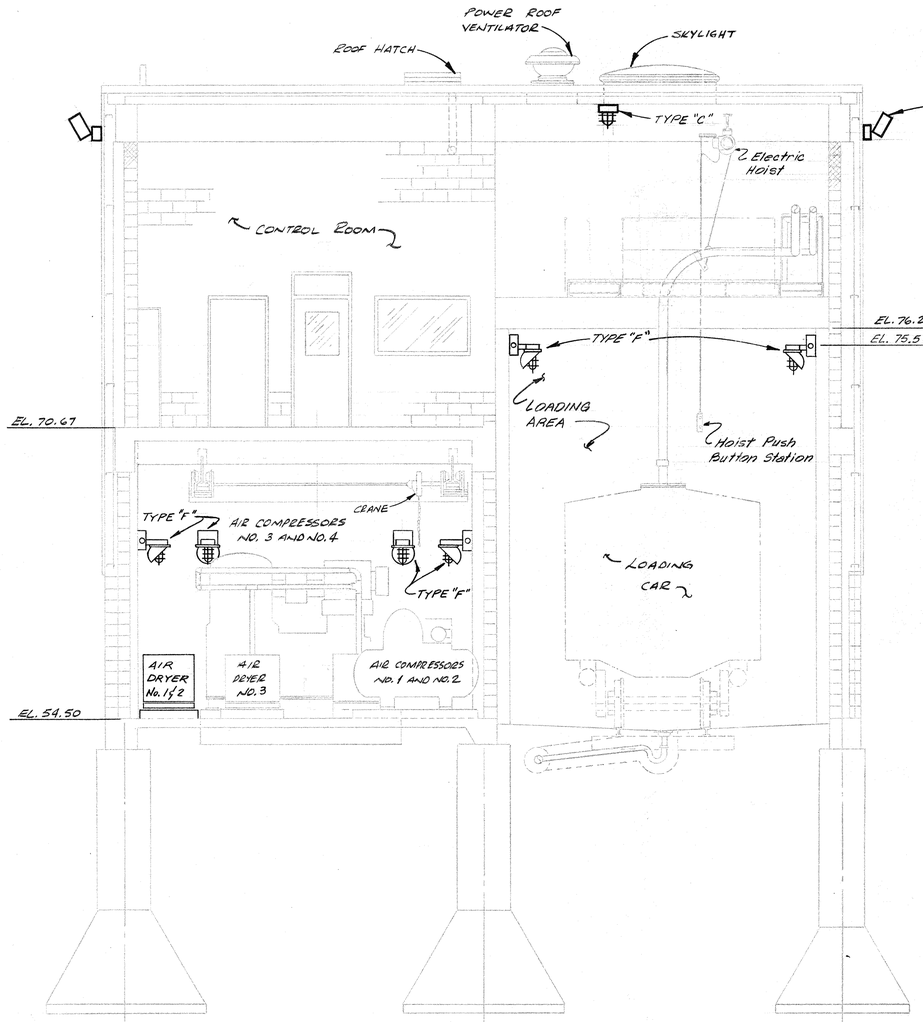

SECTION A / 47
SCALE: 1/4"= 1'-0"

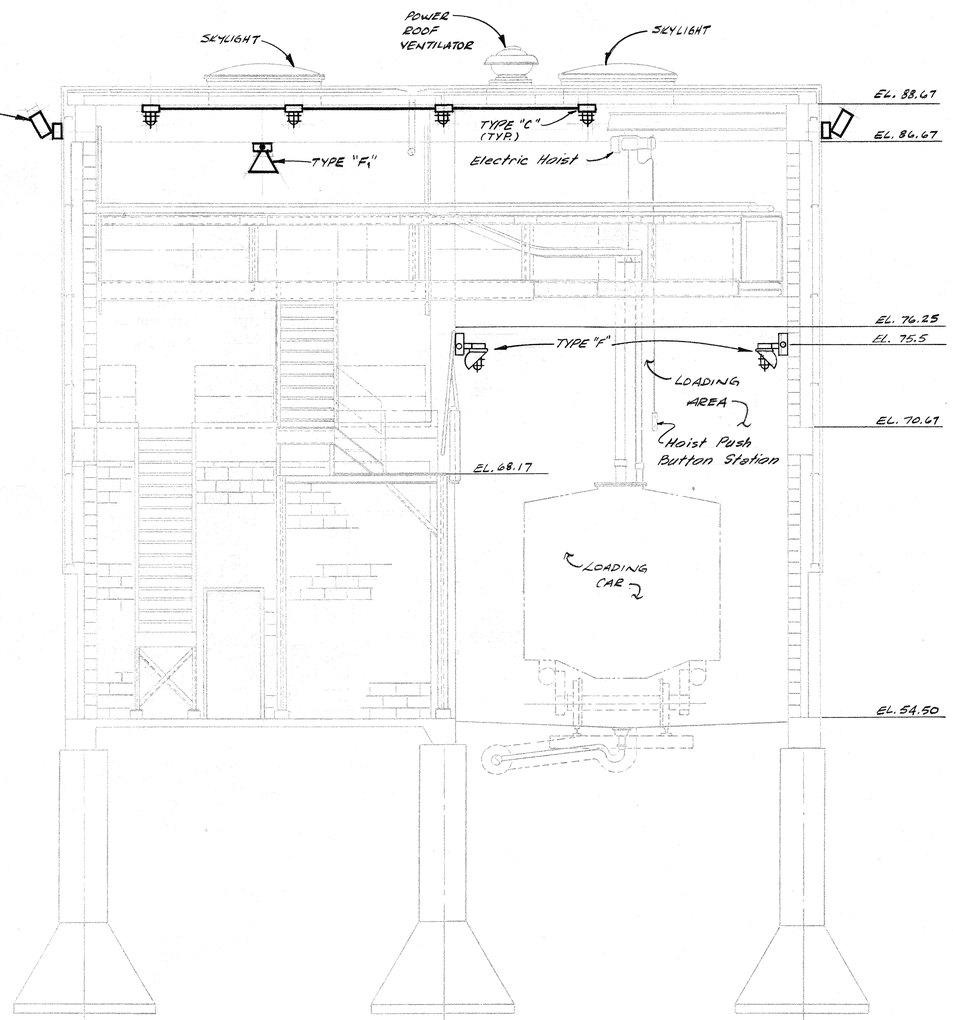

SECTION B / 47
SCALE: 1/4"= 1'-0"

W. W. RECORDS
MICROFILM
DATE 7-21-83

JOB NO. 3304-DS-2

CITY OF HOUSTON
DEPARTMENT OF PUBLIC WORKS

ALMEDA SIMS
SLUDGE DISPOSAL PLANT
PNEUMATIC CONVEYING, STORAGE AND LOADING FACILITIES

LOADING FACILITIES

ELECTRICAL SECTIONS AND DETAILS

RECOMMENDED FOR APPROVAL:

Kenneth Rindsay
BINKLEY & HOLMES, INC. CONSULTING ENGINEERS

STATE OF TEXAS
LARRY M. BARFIELD
38237
REGISTERED PROFESSIONAL ENGINEER

STATE OF TEXAS
KENNETH W. LINDSEY
31158
REGISTERED PROFESSIONAL ENGINEER

APPROVED:

Walter Williams
WASTEWATER

PAVING

WATER

Jerry Jenkins
CONSTRUCTION

STORM SEWER
ASST. DIRECTOR

Jimmie Blackwell
DIRECTOR

DESIGNED BY: K.K.S. SCALE: 1/4" = 1'-0"
DRAWN BY: M.V.S. DATE: APRIL, 1980
CHECKED BY: L.M.B. DRAWING NO. 26709
SHEET SHEET NO. 47 OF 51

NOTES

1. ALL WIRING, EQUIPMENT, DEVICES AND LIGHTING FIXTURES ETC. IN STORAGE FACILITIES SHALL BE PER ARTICLE 500-5(b) CLASS II DIVISION II.
2. WIRING BETWEEN MULTIPLEXER M-3 (REMOTE I/O UNIT) AND INSTRUMENTS/DEVICES FOR PRESSURE POT NO.3 AND NO.4 SHALL BE DONE PER PNEUMATIC CONVEYING SYSTEM AND PROCESS CONTROL SYSTEM REQUIREMENTS. CO-AXIAL CABLE SHALL BE INSTALLED IN CONDUIT BETWEEN MULTIPLEXER M-3 AND PROCESS CONTROLLER IN LOADING BUILDING. CABLE FURNISHED BY PROCESS CONTROL SYSTEM SUPPLIER.

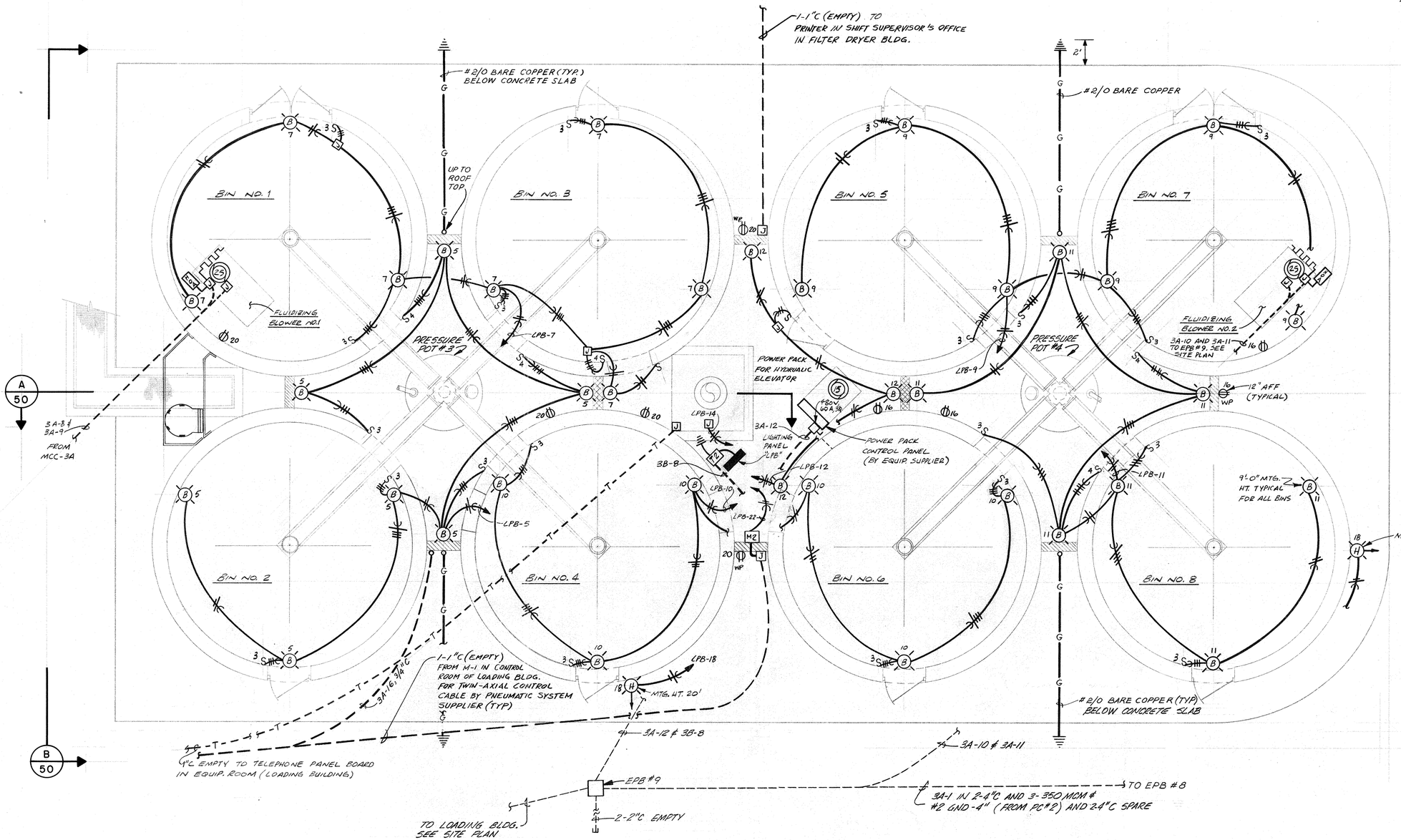

GROUND FLOOR ELECTRICAL PLAN A 48
SCALE : 1/4" = 1'-0"

LIGHTNING PROTECTION SYSTEM

GENERAL NOTES :

1. LIGHTNING PROTECTION GROUNDING AND BONDING BETWEEN ELECTRICAL GROUND ROD SHALL BE PER UNDER WRITERS LABORATORIES "MASTER LABELED LIGHTNING PROTECTION SYSTEM"
2. SEE LIGHTNING PROTECTION, GENERAL NOTES ON SHEET NO. 49 OF 51.
3. LIGHTNING PROTECTION SYSTEM SHALL BE EXTENDED TO THE ADJACENT LOADING FACILITIES AS PER "NF PA" AND UNDER WRITERS LABORATORIES.

W. W. RECORDS MICROFILM DATE 7-21-83

JOB NO. 3304-DS-2

CITY OF HOUSTON
DEPARTMENT OF PUBLIC WORKS

ALMEDA SIMS
SLUDGE DISPOSAL PLANT
PNEUMATIC CONVEYING, STORAGE AND LOADING FACILITIES

STORAGE FACILITIES
GROUND FLOOR
ELECTRICAL PLAN

RECOMMENDED FOR APPROVAL:
Kenneth R. Lindsey
BINKLEY & HOLMES, INC. CONSULTING ENGINEERS

LARRY M. BARFIELD 39337 REGISTERED PROFESSIONAL ENGINEER
KENNETH R. LINDSEY 51158 REGISTERED PROFESSIONAL ENGINEER

APPROVED:

WASTEWATER	PAVING
WATER	CONSTRUCTION
STORM SEWER	
ASST. DIRECTOR	DIRECTOR

DESIGNED BY: K.K.S.	SCALE: 1/4" = 1'-0"
DRAWN BY: L. I.	DATE: APRIL, 1980
CHECKED BY: L.M.B.	DRAWING NO. 26709
SHEET	SHEET NO. 48 OF 51

NOTES

ALL WIRING, EQUIPMENT, DEVICES AND LIGHTING FIXTURES SHALL BE PER ARTICLE 500-5(b) CLASS II, DIVISION II.

(1) LIGHTING FIXTURE TYPE "A" SHALL BE SUPPORTED TO HANDRAIL. MOUNTING HEIGHT 9'-6".

(2) LIGHTING ON CIRCUIT LPB-2 SHALL BE CONTROLLED BY PHOTO CELL.

(3) WIRING BETWEEN MULTIPLEXERS M-1, M-2 AND SOLENOID VALVES, THERMOCOUPLES AND LEVEL TRANSMITTERS SHALL BE DONE PER PNEUMATIC CONVEYING SYSTEM AND PROCESS CONTROL SYSTEM REQUIREMENTS. CO-AXIAL CABLE SHALL BE INSTALLED IN CONDUIT FROM MULTIPLEXERS M-1 & M-2 TO PROCESS CONTROLLER IN LOADING BLDG. CABLE FURNISHED BY PROCESS CONTROL SYSTEM SUPPLIER.

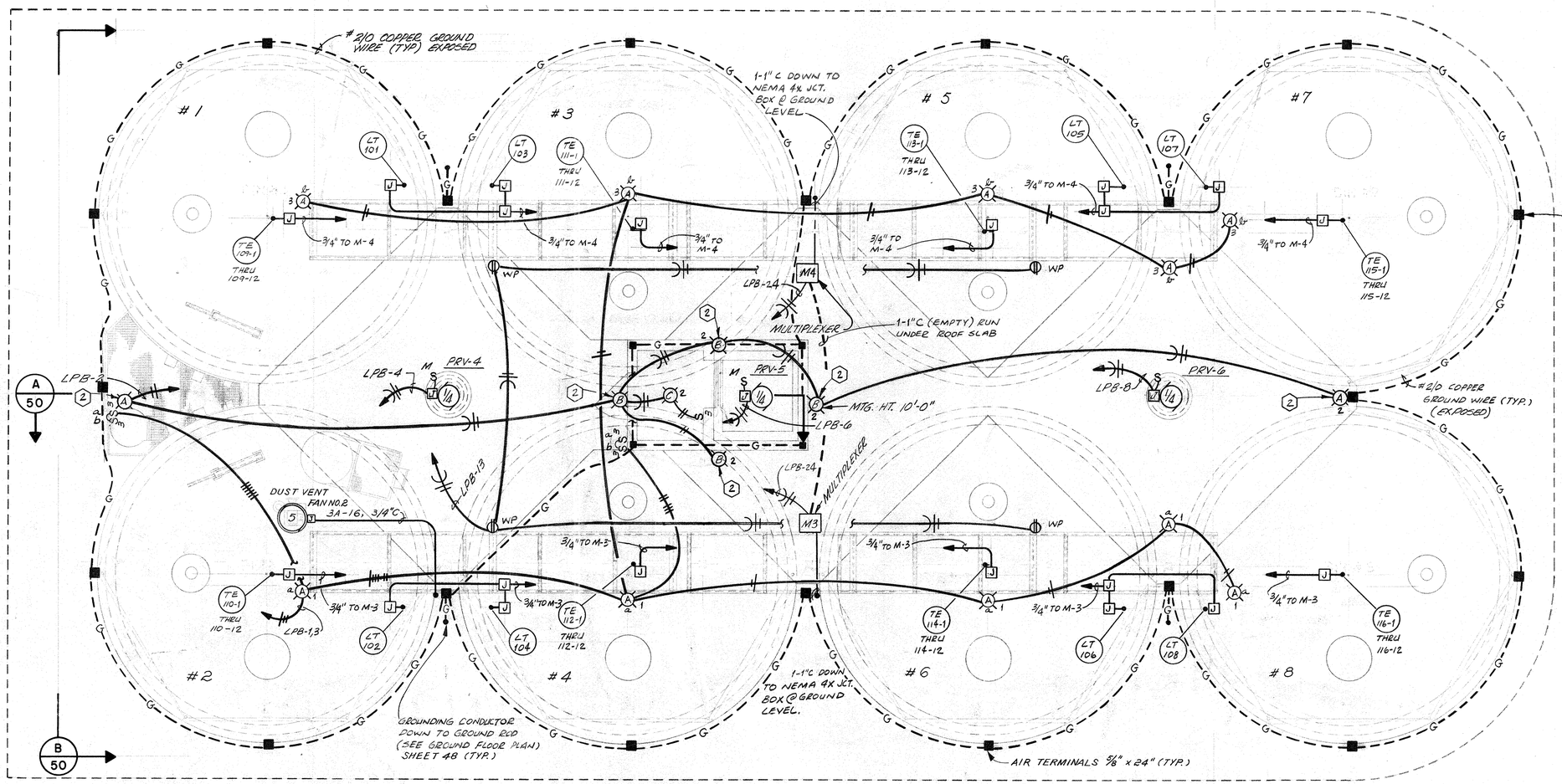

LIGHTNING PROTECTION

GENENAL NOTES

(1) THE LIGHTNING PROTECTION SHALL BE PER N.F.P.A., U.S. BUREAU OF STANDARDS, UNDERWRITERS LABORATORIES AND N.E.C.

(2) ALL MATERIALS SHALL BE APPROVED BY U.L. AND UPON COMPLETION, THE LIGHTNING PROTECTION SYSTEM SHALL BE INSPECTED BY U.L. AND THEIR "MASTER LABLE" ISSUED AND PRESENTED TO THE OWNER.

(3) ALL MECHANICAL EQUIPMENT, HANDRAILS AND METAL PARTS SHALL BE BONDED TO THE LIGHTNING PROTECTION SYSTEM.

ROOF ELECTRICAL PLAN — A/49

SCALE: 1/4" = 1'-0"

W. W. RECORDS MICROFILM DATE 7-21-83

JOB NO. 3304-DS-2

CITY OF HOUSTON
DEPARTMENT OF PUBLIC WORKS

ALMEDA SIMS
SLUDGE DISPOSAL PLANT

PNEUMATIC CONVEYING, STORAGE AND LOADING FACILITIES

STORAGE FACILITIES
ROOF ELECTRICAL PLAN

RECOMMENDED FOR APPROVAL:

Kenneth R. Lindsey

BINKLEY & HOLMES, INC. CONSULTING ENGINEERS

STATE OF TEXAS — LARRY M. BARFIELD — 39331 — REGISTERED PROFESSIONAL ENGINEER

STATE OF TEXAS — KENNETH R. LINDSEY — 21156 — REGISTERED PROFESSIONAL ENGINEER

APPROVED:

WASTEWATER

WATER

PAVING CONSTRUCTION

STORM SEWER ASST. DIRECTOR

DIRECTOR

DESIGNED BY K.K.S. SCALE: 1/4" = 1'-0"
DRAWN BY M.V.S. DATE: APRIL, 1980
CHECKED BY L.M.B. DRAWING NO. 26709
SHEET SHEET NO. 49 OF 51

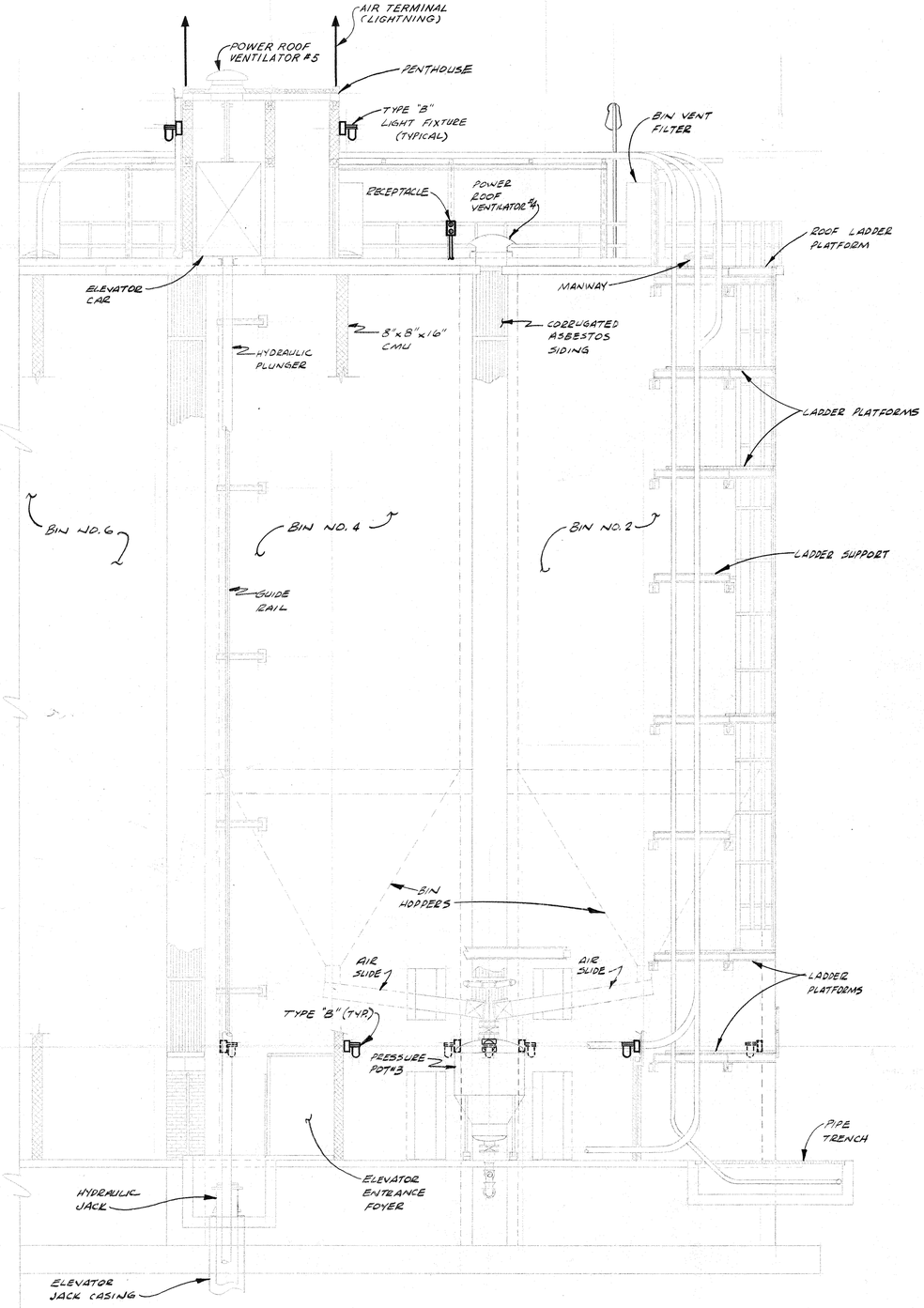

SECTION A / 50
SCALE: 3/16"=1'-0"

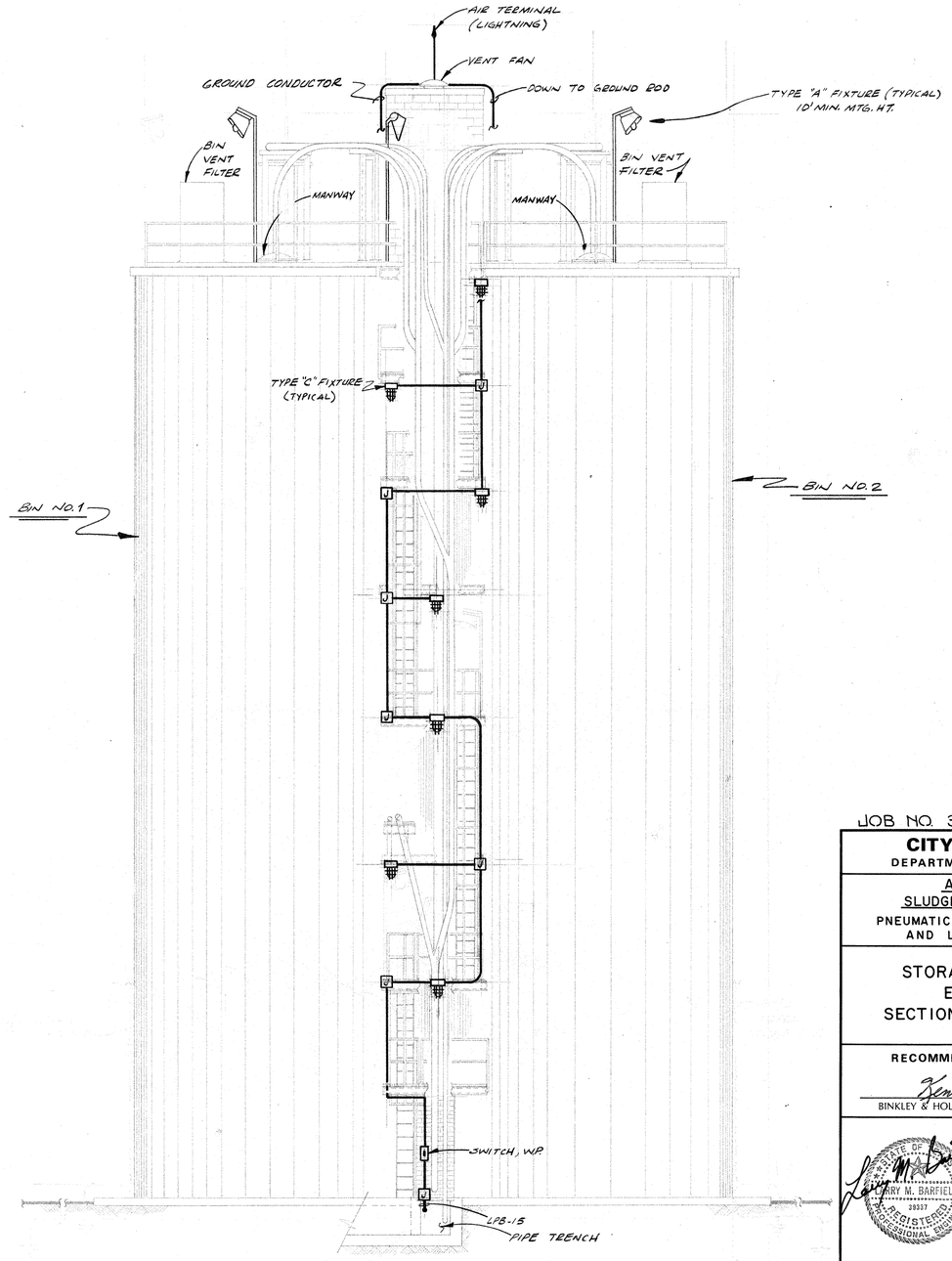

NORTH ELEVATION B / 50
SCALE: 3/16"=1'-0"

W. W. RECORDS MICROFILM DATE 7-21-83

JOB NO. 3304-DS-2

CITY OF HOUSTON
DEPARTMENT OF PUBLIC WORKS

ALMEDA SIMS
SLUDGE DISPOSAL PLANT
PNEUMATIC CONVEYING, STORAGE AND LOADING FACILITIES

STORAGE FACILITIES ELECTRICAL SECTION AND ELEVATION

RECOMMENDED FOR APPROVAL:
Kenneth R. Binkley
BINKLEY & HOLMES, INC. CONSULTING ENGINEERS

STATE OF TEXAS — JERRY N. BARFIELD — 28037 — REGISTERED PROFESSIONAL ENGINEER

STATE OF TEXAS — KENNETH L. LINDSEY — 61158 — REGISTERED PROFESSIONAL ENGINEER

APPROVED:

Walter Williams — WASTEWATER	PAVING
WATER	Jerry Hinkins — CONSTRUCTION
STORM SEWER	
ASST. DIRECTOR	Jimmie Schindewolf — DIRECTOR

DESIGNED BY: K. K. S. — SCALE: 3/16" = 1'-0"
DRAWN BY: L. I. — DATE: APRIL, 1980
CHECKED BY: L.M.B. — DRAWING NO. 26709
SHEET — SHEET NO. 50 OF 51

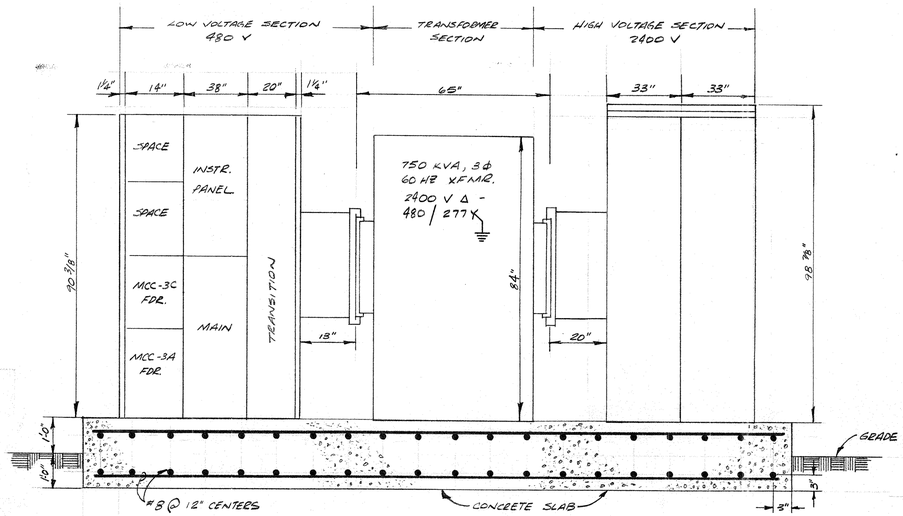

POWER CENTER NO.3 - FRONT ELEVATION (A / 51)
N.T.S.

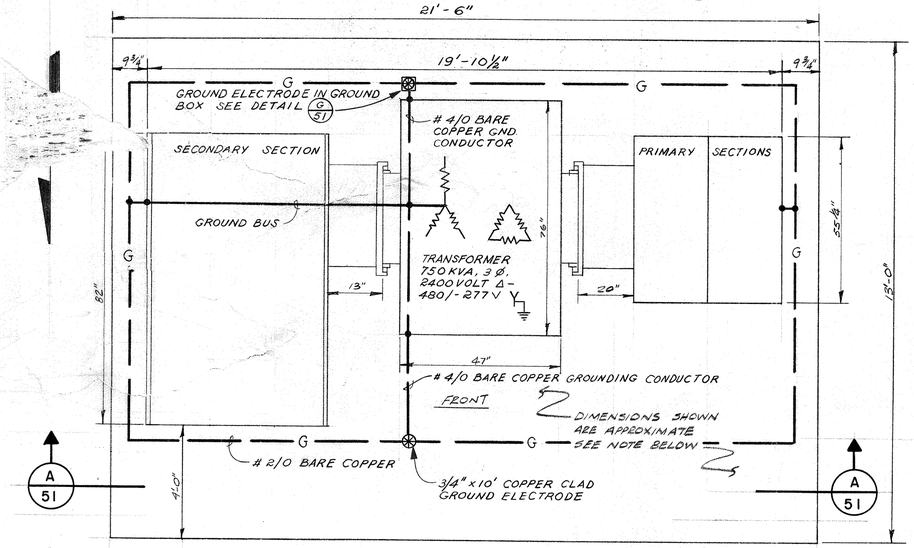

POWER CENTER NO.3 - PLAN (C / 51)
N.T.S.

NOTE: EXACT SIZE OF EQUIPMENT PAD TO BE DETEEMINED FECM SPECIFIC EQUIPMENT SUPPLIED.

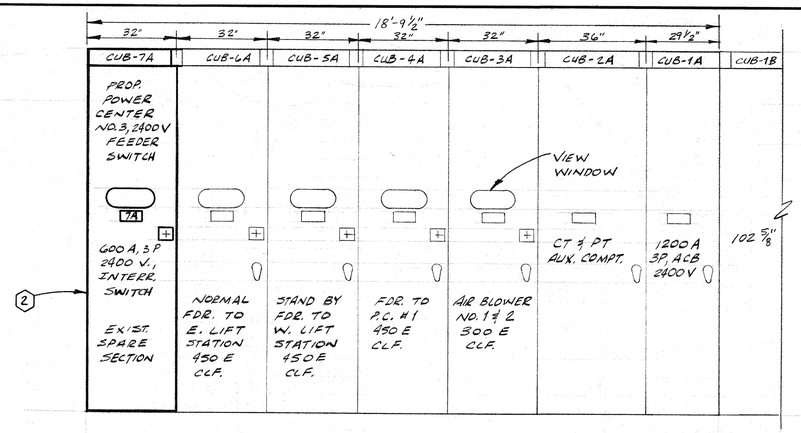

EXISTING MAIN SWITCHGEAR "A" - EAST ELEVATION (B / 51)
POWELL ELECTRICAL MFG. CO.
N.T.S.

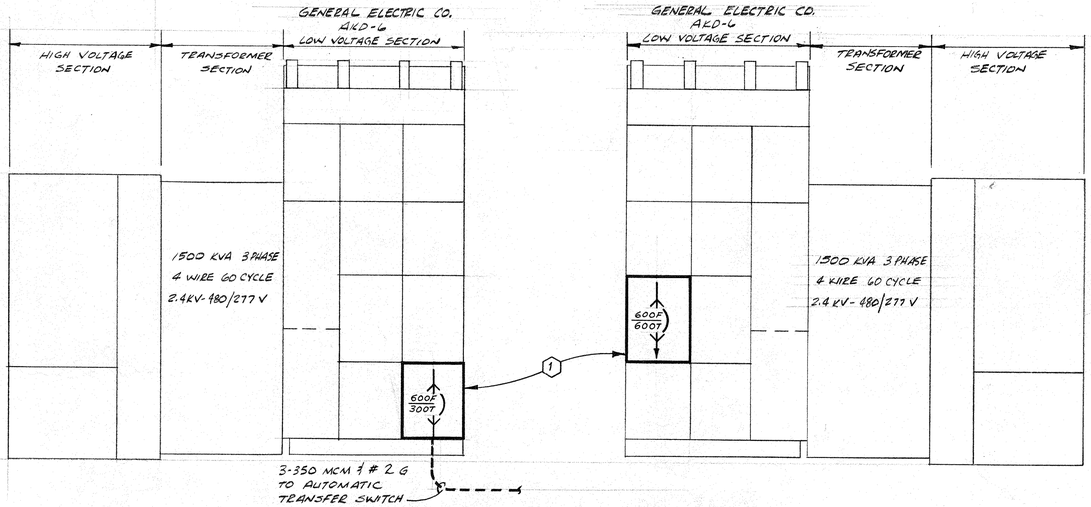

EXISTING POWER CENTER NO.2 - FRONT ELEVATION (D / 51)
GENERAL ELECTRIC AKD-6 POWERMASTER
N.T.S.

EXISTING POWER CENTER NO.1 - FRONT ELEVATION (E / 51)
GENERAL ELECTRIC AKD-6 POWERMASTER
N.T.S.

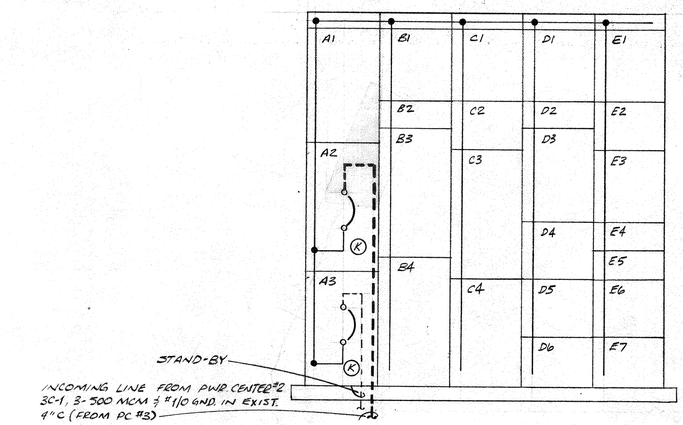

EXISTING MCC-"3C" - ELEVATION (F / 51)
GENERAL ELECTRIC 7700 LINE
N.T.S.

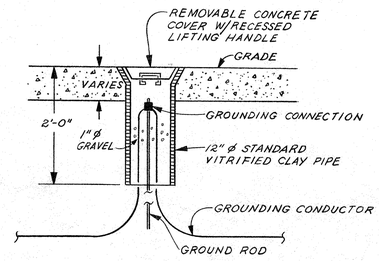

GROUND BOX DETAIL (G / 51)

W. W. RECORDS MICROFILMED DATE 1-31-83

NOTES

1. REMOVE EXISTING 600 AMP SPARE BREAKER FROM POWER CENTER NO.1 SECONDARY DISTRIBUTION COMPARTMENT "3-C" AND INSTALL IN POWER CENTER NO.2 - SECONDARY DISTRIBUTION COMPARTMENT "3D" (EXIST. SPACE) REPLACE TRIP SETTING WITH 300 A TRIP SETTING AND CONNECT THE FEEDER (3-350 MCM) TO AUTOMATIC TRANSFER SWITCH IN LOADING BUILDING.

2. INSTALL 300 AMP (CLF) FUSE IN THE EXISTING SPARE SWITCHGEAR AND CONNECT PROPOSED FEEDER 3-350 MCM, 5KV FOR POWER CENTER NO.3 (SEE PLAN DETAIL ON SITE PLAN.)

JOB NO. 3304-D5-2

CITY OF HOUSTON
DEPARTMENT OF PUBLIC WORKS

ALMEDA SIMS
SLUDGE DISPOSAL PLANT
PNEUMATIC CONVEYING, STORAGE AND LOADING FACILITIES

MISCELLANEOUS ELECTRICAL DETAILS

RECOMMENDED FOR APPROVAL:
Kenneth R. Binkley
BINKLEY & HOLMES, INC. CONSULTING ENGINEERS

STATE OF TEXAS — LARRY M. BARFIELD — 39337 — REGISTERED PROFESSIONAL ENGINEER
STATE OF TEXAS — KENNETH R. LINSLEY — 31158 — REGISTERED PROFESSIONAL ENGINEER

APPROVED:
WASTEWATER
PAVING
WATER
CONSTRUCTION
STORM SEWER
ASST. DIRECTOR
DIRECTOR

DESIGNED BY: K.K.S. SCALE: NONE
DRAWN BY: L.I. DATE: APRIL, 1980
CHECKED BY: L.M.B. DRAWING NO. 26709
SHEET SHEET NO. 51 OF 51

CITY OF HOUSTON
DEPARTMENT OF PUBLIC WORKS
JIMMIE SCHINDEWOLF, DIRECTOR

ALMEDA-SIMS SLUDGE DISPOSAL PLANT

TRUCK LOADING FACILITY

1981

WASTEWATER DIVISION JOB NO. 3850-I

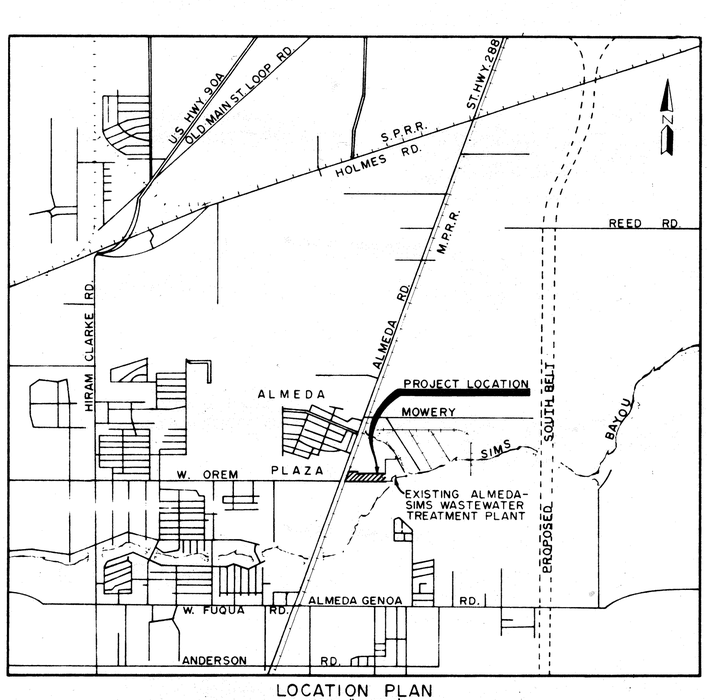

LOCATION PLAN
SCALE 1"= 3000'

INDEX TO DRAWINGS

DESCRIPTION	SHEET NO.
TITLE	1
SITE PLAN	2
DRYER ROOM MODIFICATIONS PLAN ELEV. 80'-6" PLAN ELEV. 66'-10"	3
DYRER ROOM MODIFICATION SECTIONS	4
LOADING STRUCTURE ELEVATIONS	5
LOADING STRUCTURE GROUND FLOOR PLAN ELEV. 54'-0"	6
LOADING STRUCTURE PLAN ELEV. 70'-0"	7
LOADING STRUCTURE ROOF DRAINAGE AND FRAMING PLANS	8
LOADING STRUCTURE SECTIONS	9
LOADING STRUCTURE SECTION AND MISCELLANEOUS DETAILS	10
LOADING STRUCTURE GROUND FLOOR SECTIONS	11
LOADING STRUCTURE FRAMING ELEVATIONS AND DETAILS	12
STAIRWELL SECTIONS AND DETAILS	13
PLATFORM PLAN AND SECTIONS	14
BELT PLOW AND HOPPER SECTIONS AND DETAILS	15
MISCELLANEOUS SECTIONS AND DETAILS	16
ARCHITECTURAL AND MISCELLANEOUS DETAILS	17
CONCRETE STANDARD DETAILS	18
ELECTRICAL ONE LINE DIAGRAM AND MISCELLANEOUS DETAILS	19
ELECTRICAL CONTROL SCHEMATICS	20
LIGHTING LAYOUT AND DISTRIBUTION CENTER PLAN ELEV. 70'-0"	21
LIGHTING LAYOUT PLAN ELEV. 84'-0"	22
ELECTRICAL LAYOUT FROM DRYER CONTROL ROOM TO TRUCK LOADING FACILITY	23
ELEC. SECTION	

W. W. RECORDS
FILM
DATE 7-27-83

BINKLEY & HOLMES, INC.
Consulting Engineers
Houston, Texas

E 8+00 E 9+00 E 10+00 E 11+00 E 12+00 E 13+00 E 14+00 E 15+00 E 16+00

N 1+00 0+00 S 1+00 S 2+00 S 3+00

CITY BENCH MARK 5351 0116
ELEVATION: 54.67
Monument located approximately 80' East of the intersect of Almeda Road and W. Orem Drive.

BEGIN PAVING E 9+00
E 9+80
E 13+60
E 14+00
E 14+70

℄ DITCH
TYPE "F" INLET
A/2
7' CHAIN LINK FENCE
TYPE "F" INLET
NEW ASPHALT PAVEMENT
40'
20' ASPHALT ROADWAY
40'
38'
RAILROAD SPUR TRACKS

INLET
18" STM. SWR.
NEW STM. SWR. M.H. ON EXIST. 18" STM. SWR. FL 43.00 ±
NEW LOADING STRUCTURE
INLET
FERRIC CHLORIDE STORAGE TANKS
TRUCK RAMP
FILTRATE SEAL PIT
NEW 9" SCREW CONVEYOR
NEW ASPHALT PAVING (MATCH EXIST. ELEVATION)
DRYER ROOM
NEW 26" BELT CONVEYOR
AIR LIFT BLOWER PAD
FUTURE LOADING FACILITY
NATURAL GROUND
ASPHALT PAVEMENT
FUTURE STORAGE FACILITIES
FUTURE CONST.
ASPHALT PAVEMENT
FILTER ROOM
CHEMICAL ROOM
CONSTANT HEAD TANK
POWER CTR. NO. 3
POWER CTR. NO. 1
POWER CENTER NO. 2
CONTROL BUILDING
SLUDGE THICKENER TANK
SLUDGE PUMP PAD
INLET
OIL SEPARATOR
CONC. TRUCK RAMP
JUNCTION BOX
RETAINING WALL
SCREENING FACILITY
WAS. PUMP PAD
RETAINING WALL
M.C.C. ROOM
SUPERINTENDENT'S OFFICE AND LUNCH ROOM
FUEL OIL STORAGE TANKS
H.L.&P. CO. 50' R.O.W.
SHELL PIPE LINE CORP. 30' R.O.W.

LEGEND
EXISTING
NEW

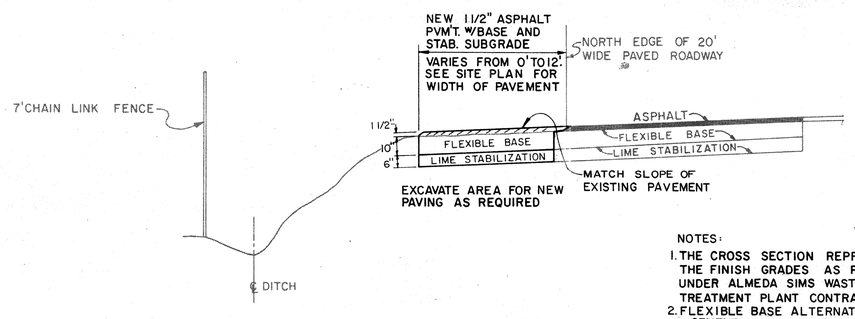

SECTION A/2
SCALE: 1"=6' HORIZ. 1"=3' VERT.

NOTES:
1. THE CROSS SECTION REPRESENTS THE FINISH GRADES AS PROPOSED UNDER ALMEDA SIMS WASTEWATER TREATMENT PLANT CONTRACT.
2. FLEXIBLE BASE ALTERNATIVES:
   a. CEMENT SHELL STABILIZED BASE.
   b. LIME STABILIZED CRUSHED LIMESTONE.
   c. HOT-MIX ASPHALTIC CONCRETE BASE.

W. V. RECORDS MICROFILM DATE 7-21-83

JOB NO. 3850-I

CITY OF HOUSTON
DEPARTMENT OF PUBLIC WORKS

ALMEDA SIMS
SLUDGE DISPOSAL PLANT
TRUCK LOADING FACILITY

SITE PLAN

RECOMMENDED FOR APPROVAL:
Kenneth R. Lindsey
BINKLEY & HOLMES, INC. CONSULTING ENGINEERS

STATE OF TEXAS KENNETH R. LINDSEY 31158 REGISTERED PROFESSIONAL ENGINEER
STATE OF TEXAS JOSEPH A. HOLMES 17221 REGISTERED PROFESSIONAL ENGINEER

APPROVED:
WASTEWATER — 9/14/82
PAVING
WATER
CONSTRUCTION
STORM SEWER
ASST. DIRECTOR
DIRECTOR

DESIGNED BY: J.A.J. SCALE: 1"= 30'
DRAWN BY: J.S.F. & R.J.L. DATE: JULY 1981
CHECKED BY: K.R.L. DRAWING NO.
SHEET SHEET NO. 2 OF 23

DWG. NO. 26733

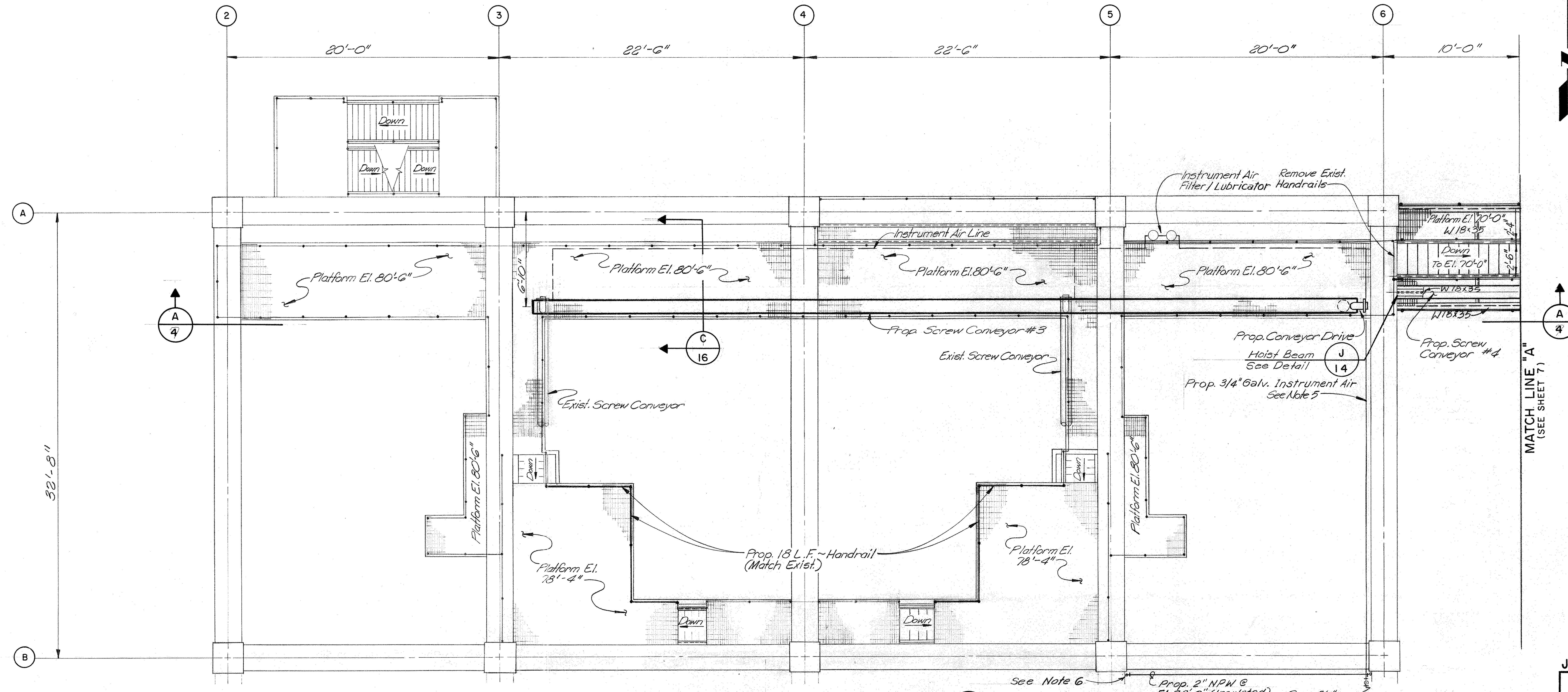

WORKING PLATFORM FRAMING PLAN AT ELEVATION 80'-6" (A/3)
(TOP OF STEEL ELEV. 80'-4 1/2")

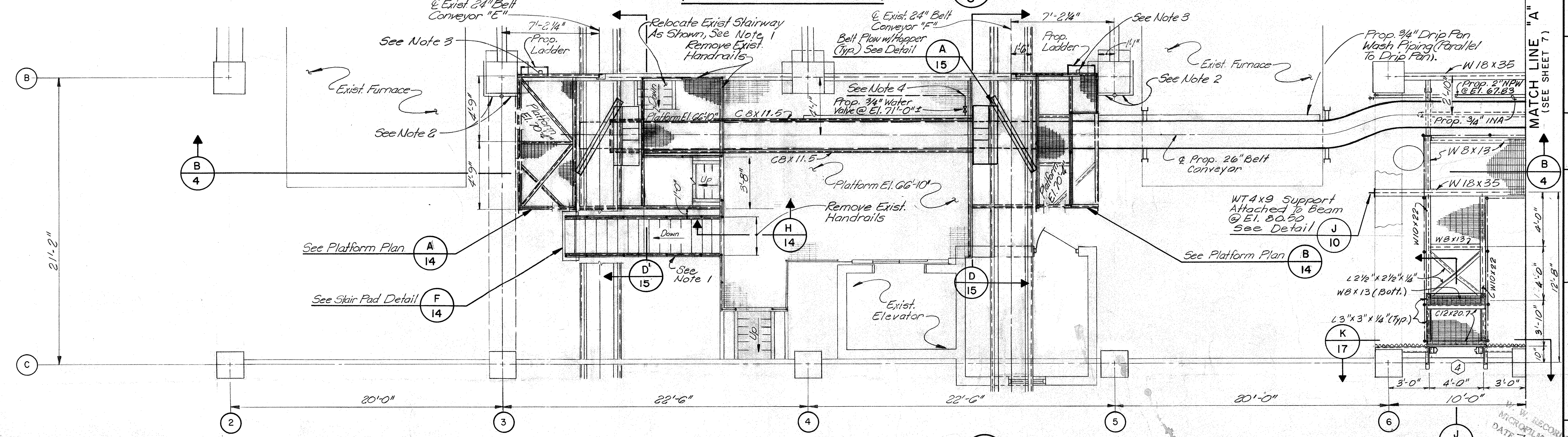

WORKING PLATFORM FRAMING PLAN AT ELEVATION 66'-10" (B/3)
(TOP OF STEEL ELEV. 66'-8 1/2")

Notes:

1. Remove And Relocate Stairs As Shown, Modify Platform Handrails As Required And Construct New Concrete Stair Pad.
2. Relocate Plant Air Hose Connection @ El. 70'-0"± To East Side Of Col. B-5 And To West Side Of Col. B-3
3. Relocate Exist. Push Button Control Stations, So They Do Not Interfere With Prop. Ladders.
4. Connect Prop. 3/4"± Galv. Pipe to Exist. Non-Potable Water Line @ El. 64'-0"± for Drip Pan Wash System.
5. Connect Prop. 3/4" Galv. Instrument Air Line To Exist. Instrument Air Line @ Col. C-6
6. Connect Prop. 2"± Water Line to Exist. Non-Potable Water Line @ Col. B-5.
7. The Contractor shall field verify locations, dimensions and elevations of existing structures that effect work under this contract.
8. Water Lines shall be provided with insulation.

JOB NO. 3850-1

CITY OF HOUSTON
DEPARTMENT OF PUBLIC WORKS

ALMEDA SIMS
SLUDGE DISPOSAL PLANT
TRUCK LOADING FACILITY

DRYER ROOM MODIFICATIONS
PLAN AT ELEV. 80'-6"
PLAN AT ELEV. 66'-10"

RECOMMENDED FOR APPROVAL:
Kenneth R. Lindsey
BINKLEY & HOLMES, INC. CONSULTING ENGINEERS

APPROVED:

Vishwa Bhola WASTEWATER	PAVING
WATER	CONSTRUCTION
STORM SEWER	
ASST. DIRECTOR	DIRECTOR

DESIGNED BY: J.A.J.	SCALE: 1/4" = 1'-0"
DRAWN BY: D.R.	DATE: JULY 1981
CHECKED BY: K.R.L.	DRAWING NO.
SHEET	SHEET NO. 3 OF 23

DWG. NO. 26733

W. W. RECORDS MICROFILM DATE 7-21-83

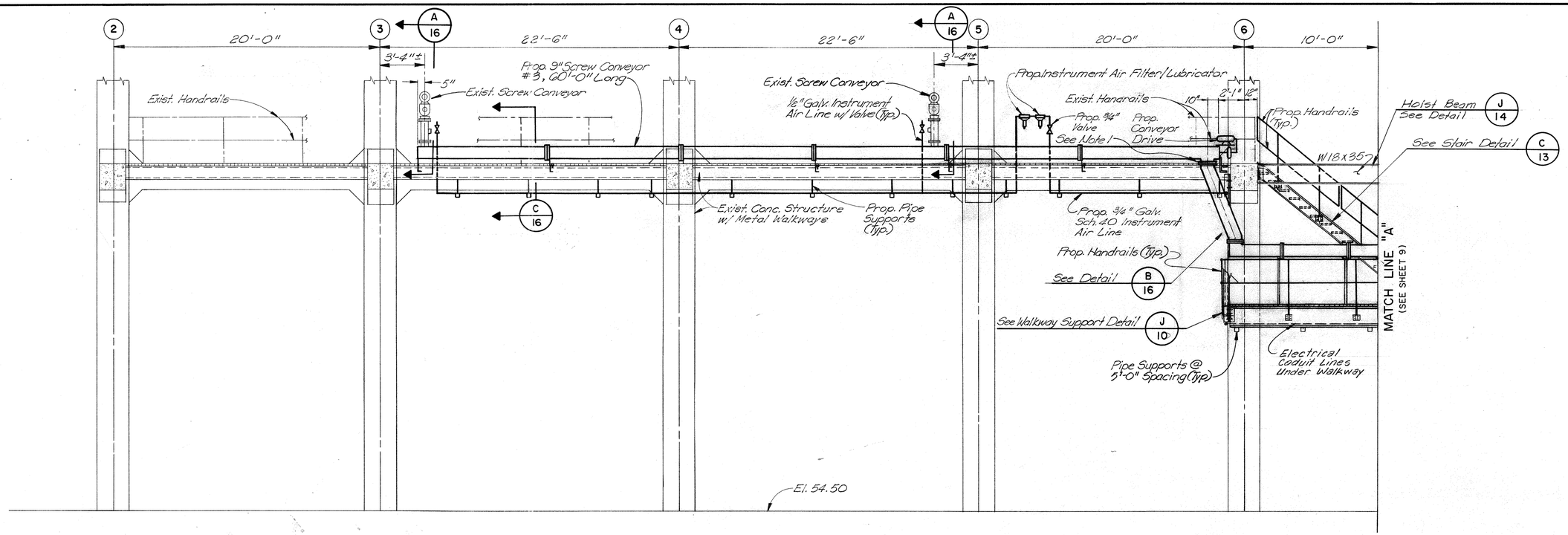

SECTION A 4
SCALE: 1/4" = 1'-0"
SEE SHEET 3

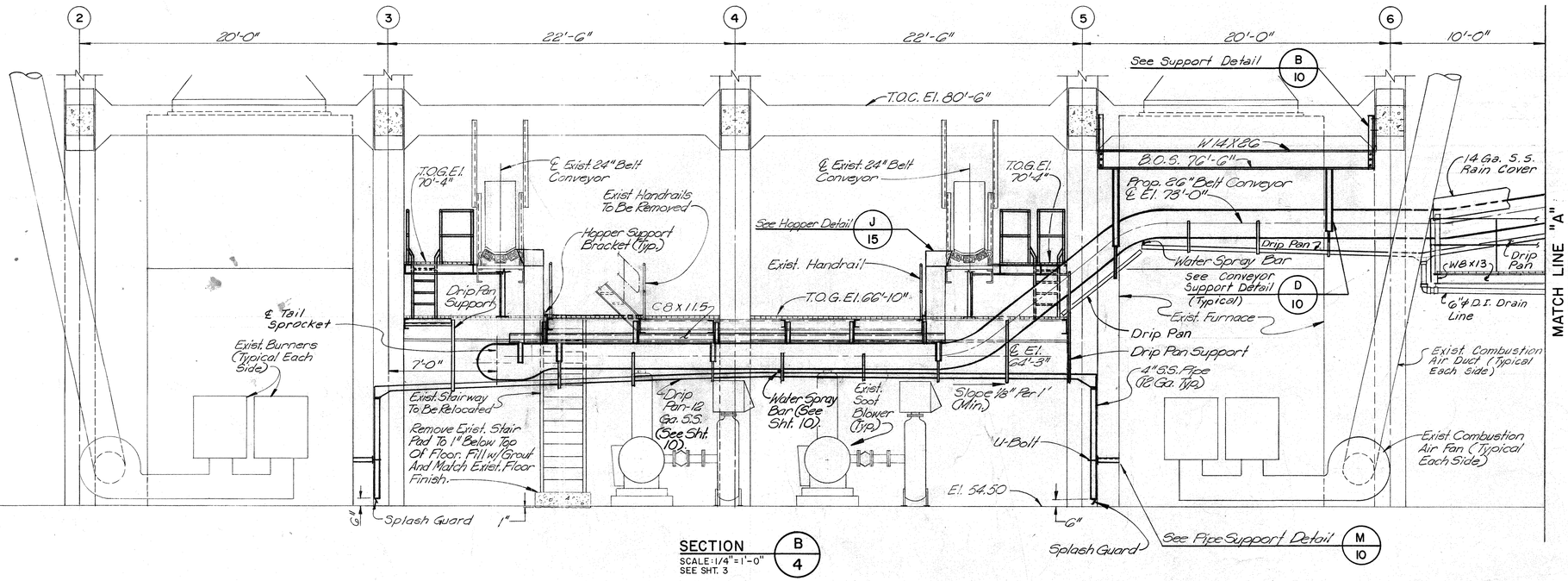

SECTION B 4
SCALE: 1/4" = 1'-0"
SEE SHT. 3

Notes:
1. Cut Opening Into Grating For Spout w/ Max. Of 2" Opening Between Spout And Grating.
2. Heavy Line Work Indicates Proposed Construction.

JOB NO. 3850-I

CITY OF HOUSTON
DEPARTMENT OF PUBLIC WORKS

ALMEDA SIMS
SLUDGE DISPOSAL PLANT
TRUCK LOADING FACILITY

DRYER ROOM MODIFICATIONS SECTIONS

RECOMMENDED FOR APPROVAL:
Kenneth R. Linsley
BINKLEY & HOLMES, INC. CONSULTING ENGINEERS

STATE OF TEXAS — KENNETH R. LINSLEY — 43158 — REGISTERED PROFESSIONAL ENGINEER
STATE OF TEXAS — JAMES A. LINDA — 43717 — REGISTERED PROFESSIONAL ENGINEER

APPROVED:

WASTEWATER	PAVING
WATER	CONSTRUCTION
STORM SEWER	
ASST. DIRECTOR	DIRECTOR

DESIGNED BY: J.A.J. SCALE: AS SHOWN
DRAWN BY: D.R. DATE: JULY 1981
CHECKED BY: K.R.L. DRAWING NO.
SHEET SHEET NO. 4 OF 23

W. W. RECORDS MICROFILM DATE 7-21-83

DWG. NO. 26733

Notes:
1. Provide Weather Tight Enclosure For Wide Flange Penetrations Through Side Walls.
2. Door (5) Provided For Future Access To Lime Storage Tank Platform.
(1) Added Door (5)

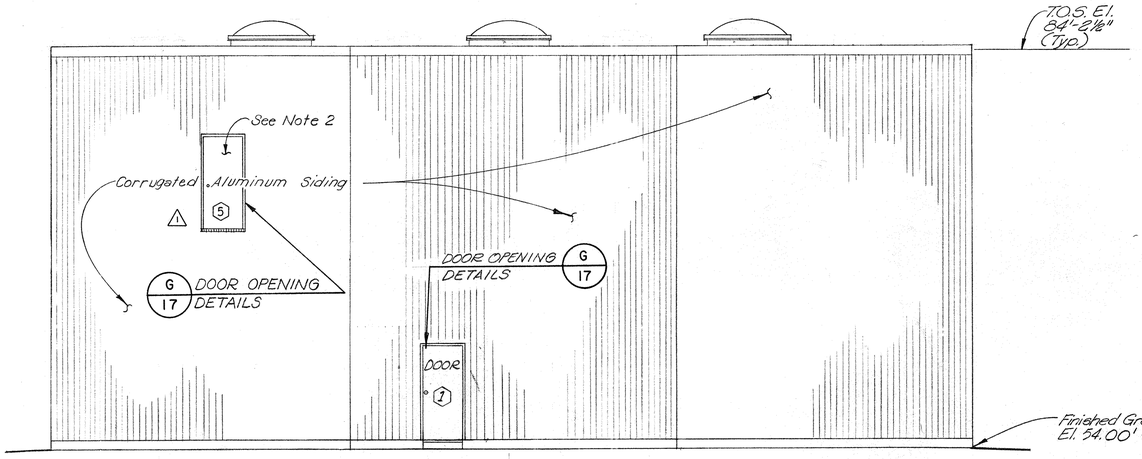

EAST ELEVATION

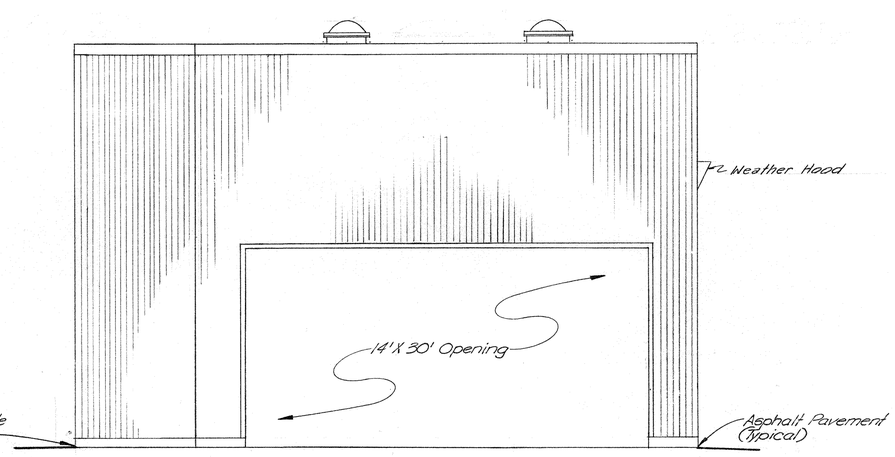

NORTH ELEVATION

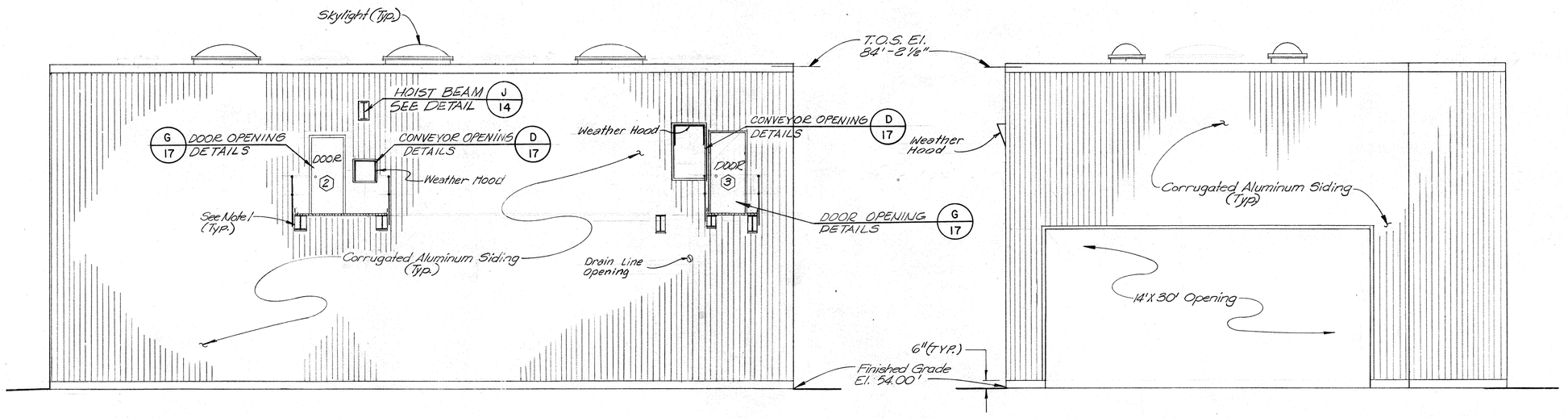

WEST ELEVATION

SOUTH ELEVATION

W. V. RECORDS MICROFILM DATE 7-21-83

REVISION	DATE	DESCRIPTION	APPROVED BINKLEY & HOLMES	APPROVED CITY OF HOUSTON
1	5-2-82	Added Door (5)	KRL	

JOB NO. 3850-1

CITY OF HOUSTON
DEPARTMENT OF PUBLIC WORKS

ALMEDA SIMS
SLUDGE DISPOSAL PLANT

TRUCK LOADING FACILITY

LOADING STRUCTURE ELEVATIONS

RECOMMENDED FOR APPROVAL:

Kenneth R. Lindsey
BINKLEY & HOLMES, INC. CONSULTING ENGINEERS

STATE OF TEXAS — KENNETH R. LINDSEY — 31158 — REGISTERED PROFESSIONAL ENGINEER

STATE OF TEXAS — JOSEPH A. JAMES — 49172 — REGISTERED PROFESSIONAL ENGINEER

APPROVED:

Vishwa Bafe
WASTEWATER

WATER

PAVING
CONSTRUCTION

STORM SEWER
ASST. DIRECTOR

DIRECTOR

DESIGNED BY: J.A.J. SCALE: 3/16"=1'-0"
DRAWN BY: D.R. DATE: JULY 1981
CHECKED BY: K.R.L. DRAWING NO.
SHEET SHEET NO. 5 OF 23

DWG. NO. 26733

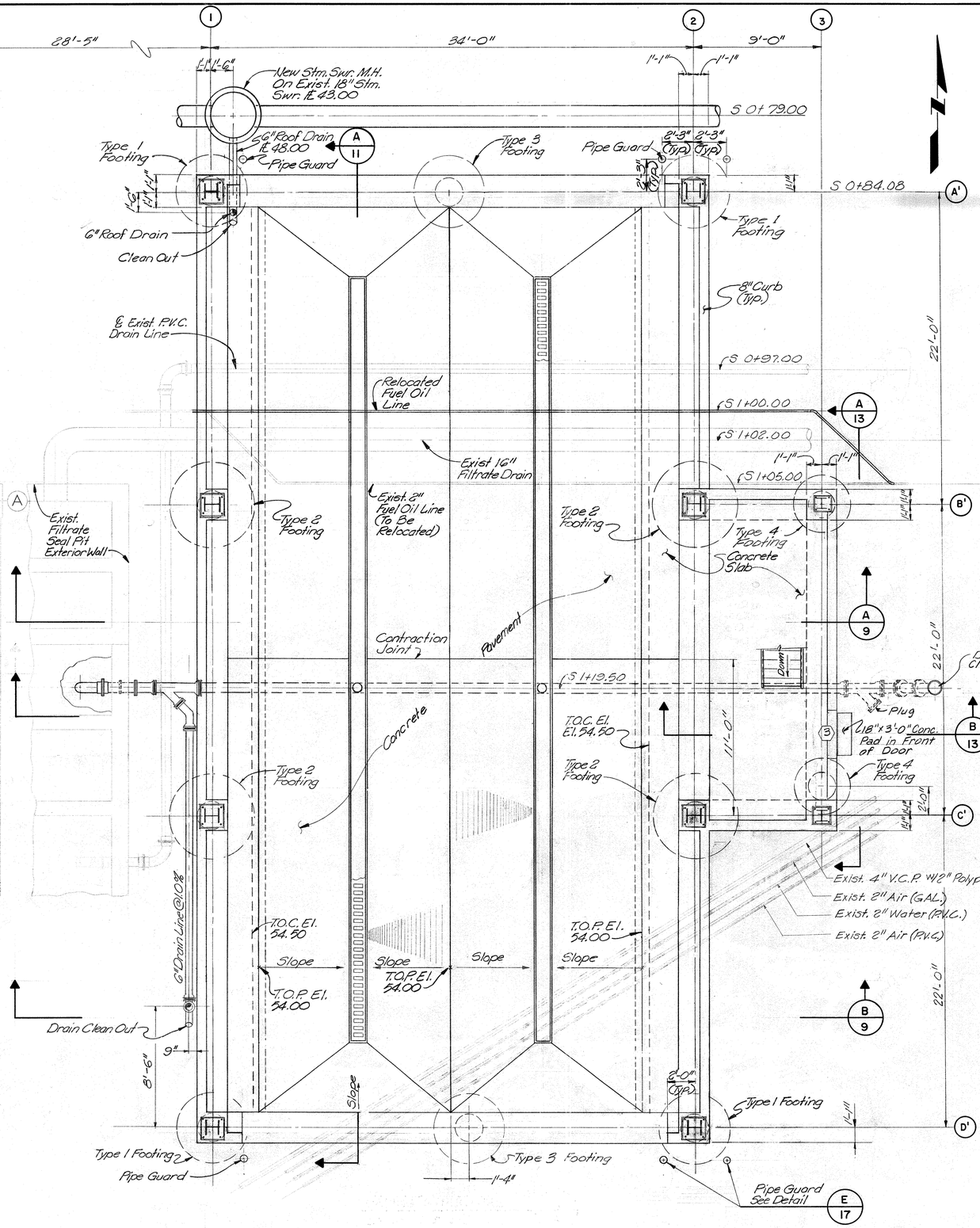

LOADING STRUCTURE PLAN AT ELEVATION 54.00 — A/6
SCALE: 1/4" = 1'-0"

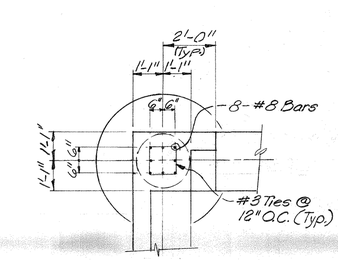

PLAN

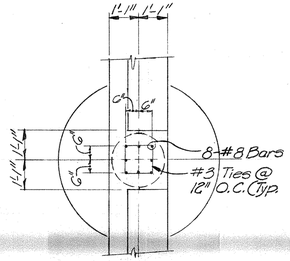

PLAN

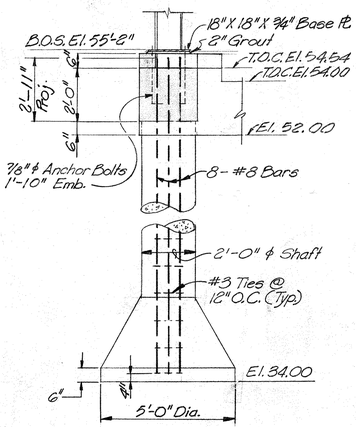

ELEVATION

TYPE 1 FOOTING — B/6
SCALE: 3/8" = 1'-0"

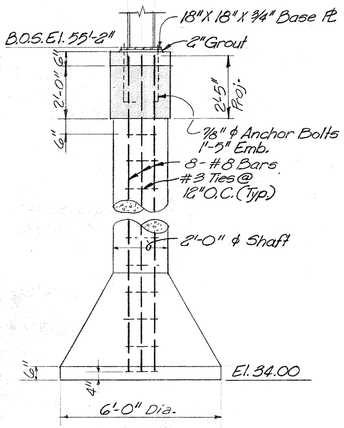

ELEVATION

TYPE 2 FOOTING — C/6
SCALE: 3/8" = 1'-0"

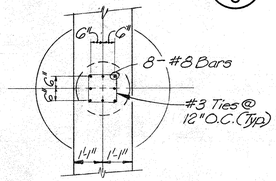

PLAN

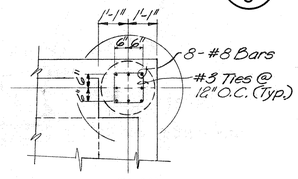

PLAN

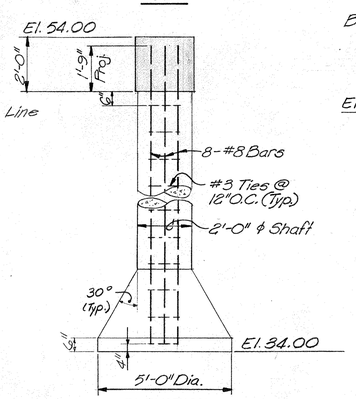

ELEVATION

TYPE 3 FOOTING — D/6
SCALE: 3/8" = 1'-0"

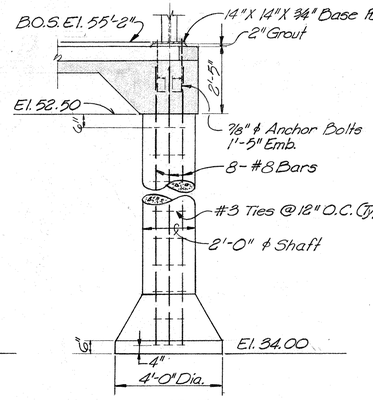

ELEVATION

TYPE 4 FOOTING — E/6
SCALE: 3/8" = 1'-0"

Note:
1. The Contractor Shall Field Verify Locations, Dimensions And Elevations Of Existing Structures That Effect Work Under This Contract.

JOB NO. 3850-1

CITY OF HOUSTON
DEPARTMENT OF PUBLIC WORKS

ALMEDA SIMS
SLUDGE DISPOSAL PLANT
TRUCK LOADING FACILITY

LOADING STRUCTURE
GROUND FLOOR PLAN
ELEV. 54'-0"

RECOMMENDED FOR APPROVAL:
Kenneth R. Lindsey
BINKLEY & HOLMES, INC. CONSULTING ENGINEERS

STATE OF TEXAS — KENNETH R. LINDSEY — 51158 — REGISTERED PROFESSIONAL ENGINEER

STATE OF TEXAS — JOSEPH LINDA — 23 — REGISTERED PROFESSIONAL ENGINEER

APPROVED:

WASTEWATER
WATER
STORM SEWER
ASST. DIRECTOR

PAVING
CONSTRUCTION
DIRECTOR

DESIGNED BY: J.A.J. SCALE: AS SHOWN
DRAWN BY: J.S.F. DATE: JULY 1981
CHECKED BY: K.R.L. DRAWING NO.
SHEET SHEET NO. 6 OF 23

DWG. NO. 26733

W. W. RECORDS MICROFILM DATE 7-21-83

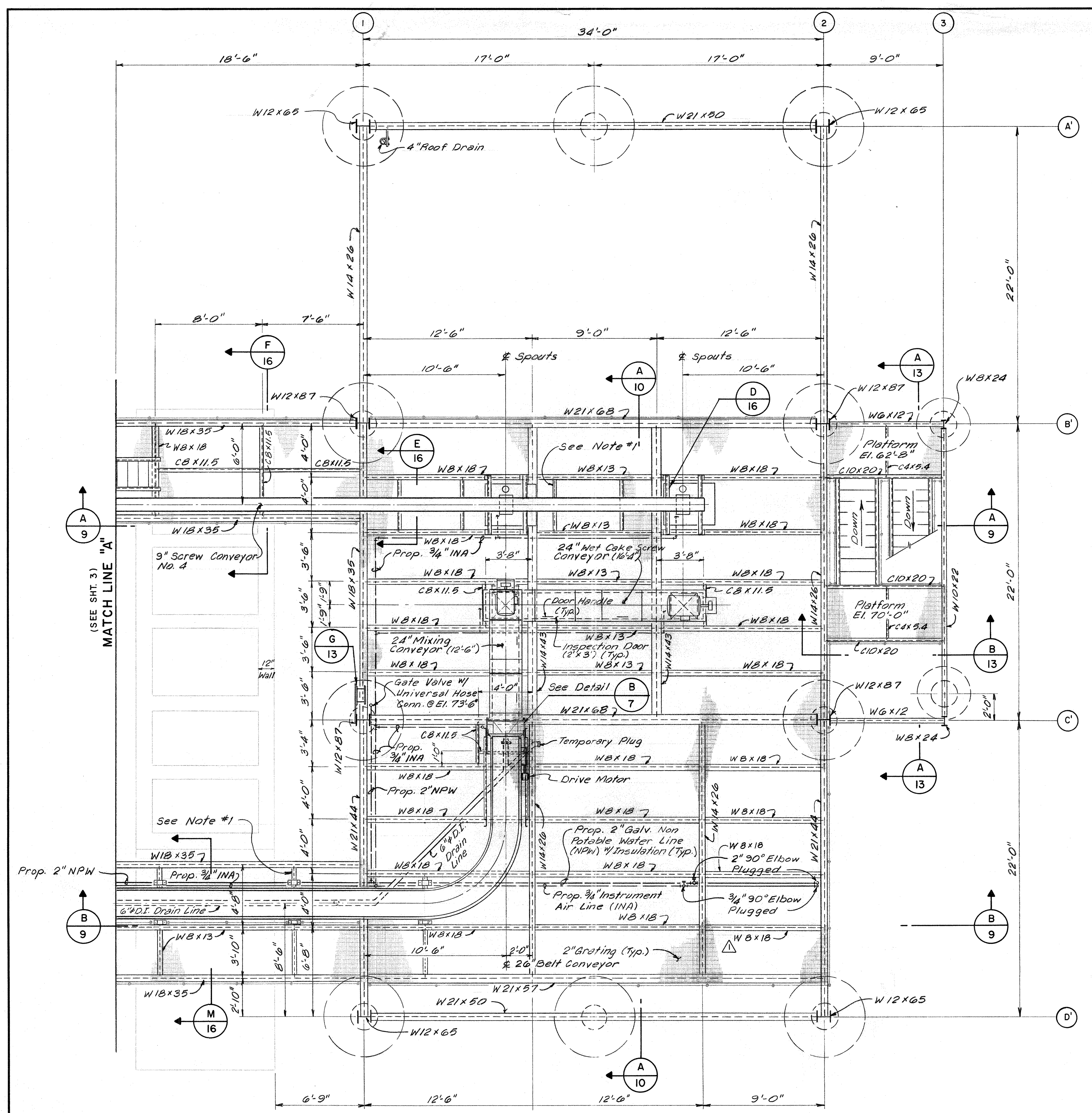

WORKING PLATFORM FRAMING PLAN AT ELEVATION 70'-0" (A/7)

(TOP OF STEEL ELEV. 69'-10")

SCALE: 1/4" = 1'-0"

GENERAL NOTES:

1. Location of conveyor support members as required by equipment furnished.
2. Hot dip galvanize structural steel after fabrication unless noted otherwise.

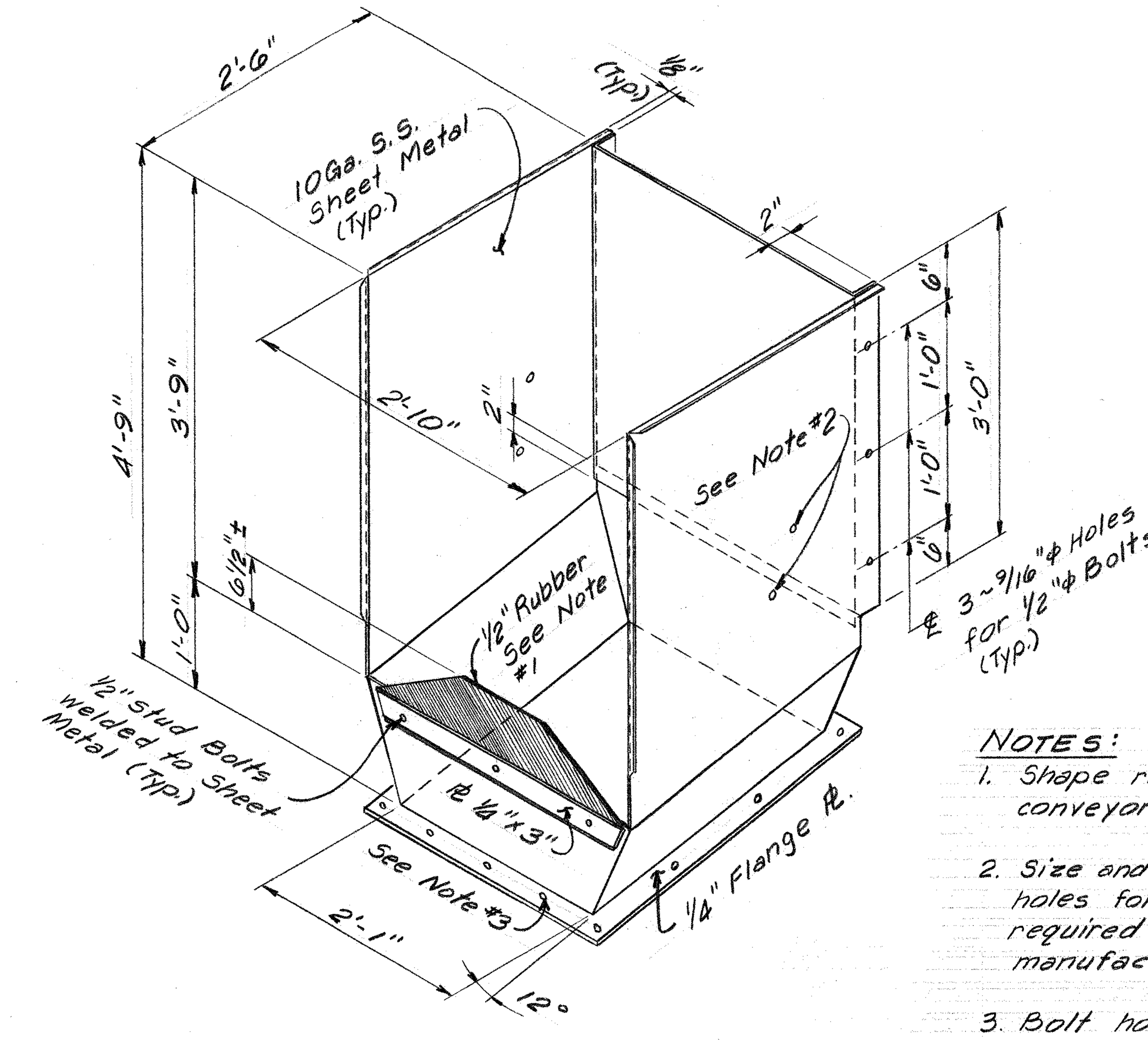

NOTES:

1. Shape rubber to belt conveyor configuration.
2. Size and location of bolt holes for belt scraper as required by conveyor manufacturer.
3. Bolt hole size and location to match mixing conveyor.

SCRAPER SPLATTER SHIELD DETAIL (B/7)

SCALE: NONE

JOB NO. 3850-1

CITY OF HOUSTON
DEPARTMENT OF PUBLIC WORKS

ALMEDA SIMS
SLUDGE DISPOSAL PLANT

TRUCK LOADING FACILITY

LOADING STRUCTURE
PLAN ELEV. 70'-0"

RECOMMENDED FOR APPROVAL:
BINKLEY & HOLMES, INC. CONSULTING ENGINEERS

APPROVED:
WASTEWATER — PAVING
WATER — CONSTRUCTION
STORM SEWER
ASST. DIRECTOR — DIRECTOR

W. W. RECORDS MICROFILM DATE 7-21-83

REVISION	DATE	DESCRIPTION	APPROVED BINKLEY & HOLMES	APPROVED CITY OF HOUSTON
△	5-2-82	Extended Platform for Access To Door 5	KRL	

DESIGNED BY: J.A.J. — SCALE: AS SHOWN
DRAWN BY: B.J.L. — DATE: JULY 1981
CHECKED BY: K.R.L. — DRAWING NO.
SHEET — SHEET NO. 7 OF 23

DWG. NO. 26733

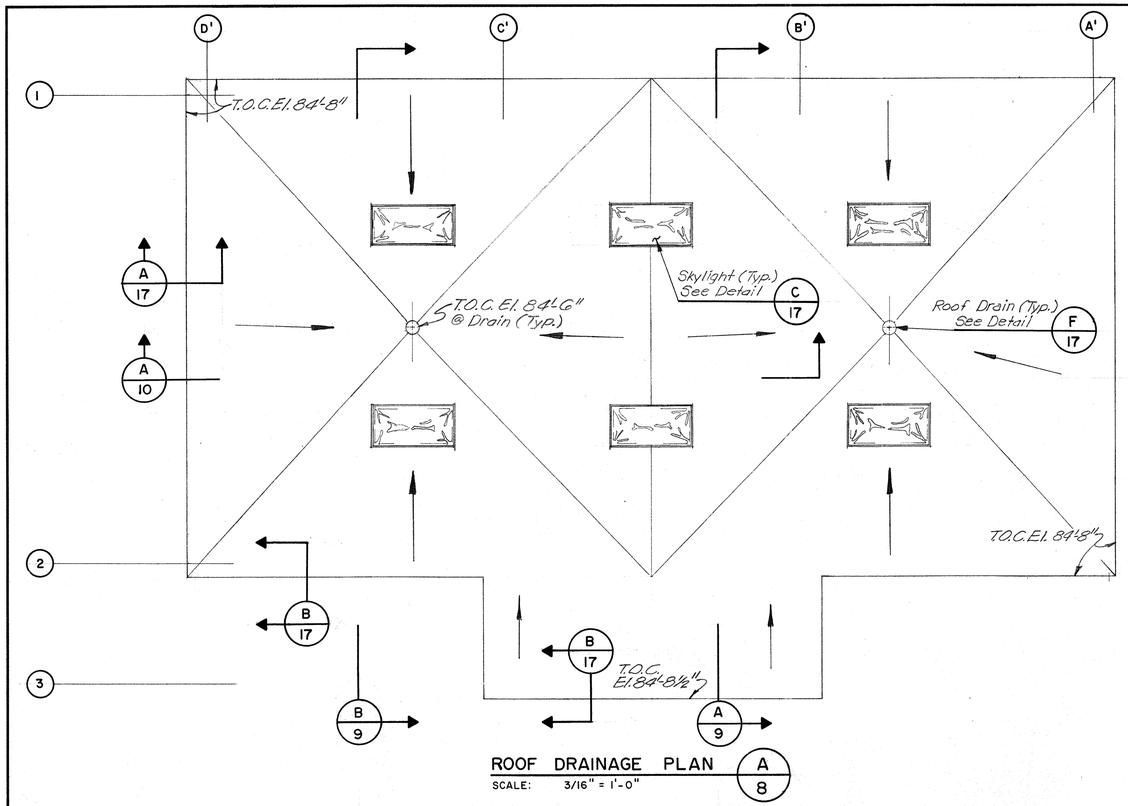

ROOF DRAINAGE PLAN A 8

SCALE: 3/16" = 1'-0"

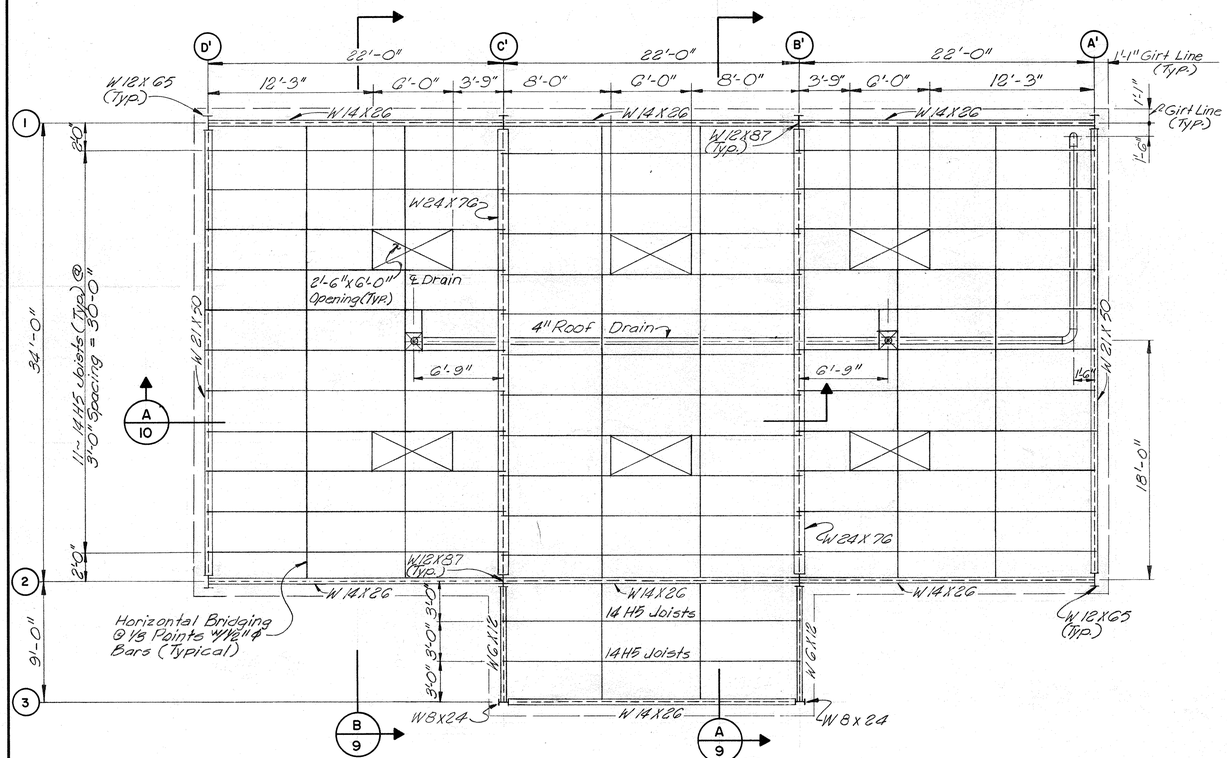

ROOF FRAMING PLAN B 8

SCALE: 3/16" = 1'-0"

JOB NO. 3850-1

CITY OF HOUSTON
DEPARTMENT OF PUBLIC WORKS

ALMEDA SIMS
SLUDGE DISPOSAL PLANT
TRUCK LOADING FACILITY

LOADING STRUCTURE ROOF DRAINAGE AND FRAMING PLANS

RECOMMENDED FOR APPROVAL:

BINKLEY & HOLMES, INC. CONSULTING ENGINEERS

STATE OF TEXAS — KENNETH L. KINSEY — 31198 — REGISTERED PROFESSIONAL ENGINEER

STATE OF TEXAS — JAMES A. JOPPA — REGISTERED PROFESSIONAL ENGINEER

APPROVED:

WASTEWATER

WATER

PAVING

CONSTRUCTION

STORM SEWER

ASST. DIRECTOR

DIRECTOR

DESIGNED BY: J.A.J. SCALE: AS SHOWN
DRAWN BY: J.W. & D.R. DATE: JULY 1981
CHECKED BY: K.R.L. DRAWING NO.
SHEET SHEET NO. 8 OF 23

W. W. RECORDS MICROFILM DATE 7-21-83

DWG. NO. 26733

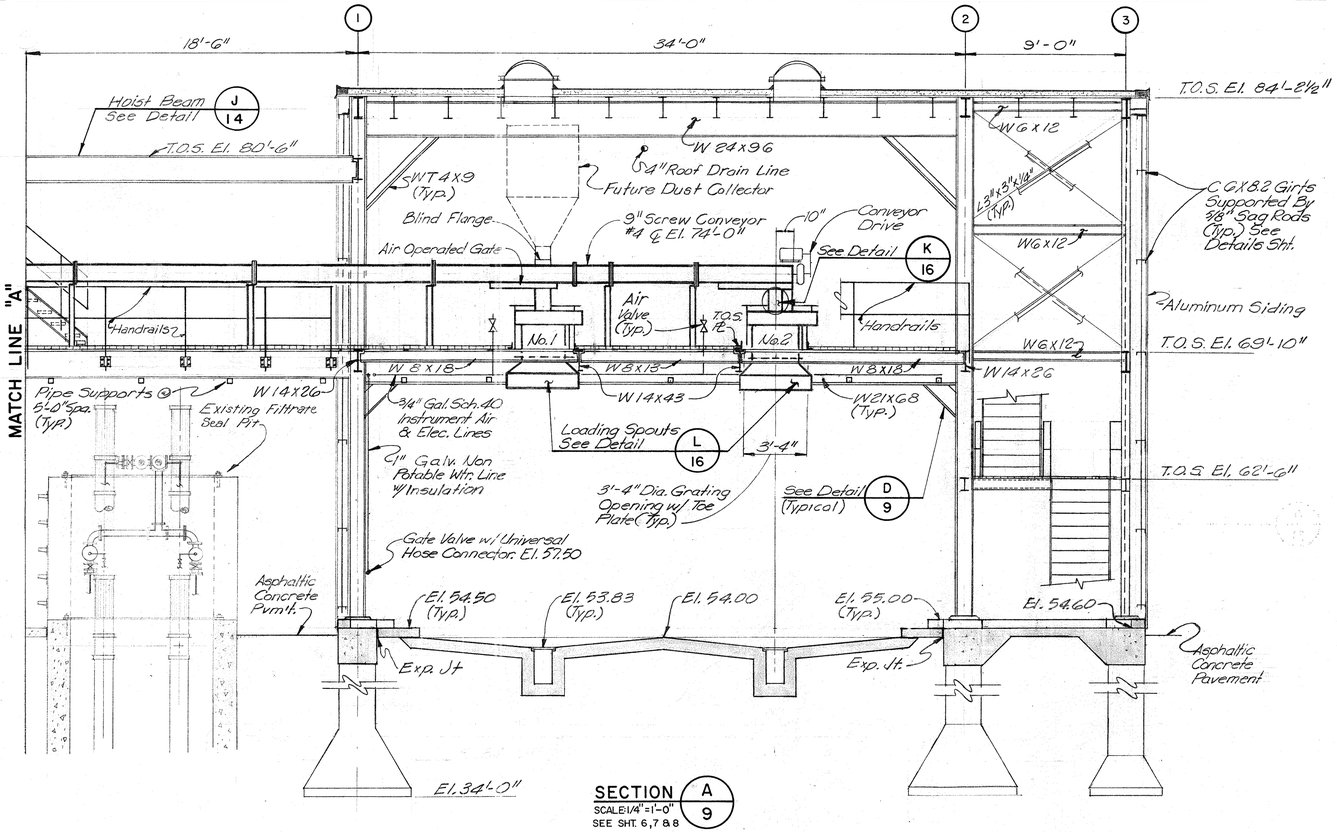

SECTION A/9
SCALE: 1/4" = 1'-0"
SEE SHT. 6, 7 & 8

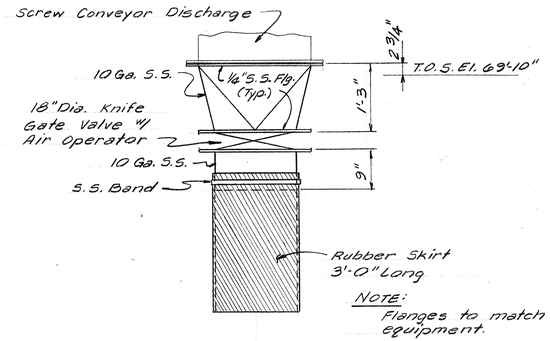

WET CAKE DISCHARGE SPOUT DETAIL C/9
SCALE: 3/4" = 1'-0"
(2 - REQUIRED)

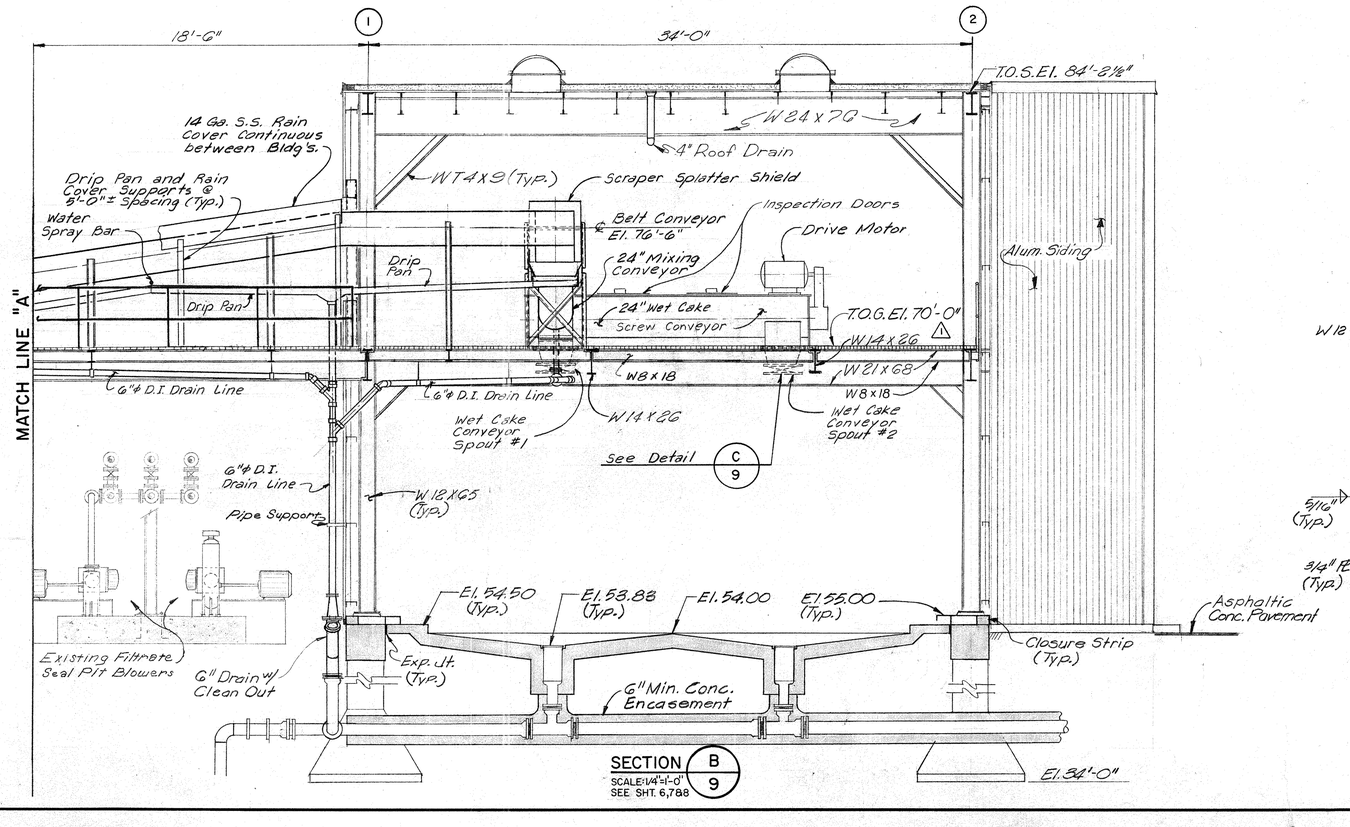

SECTION B/9
SCALE: 1/4" = 1'-0"
SEE SHT. 6, 7 & 8

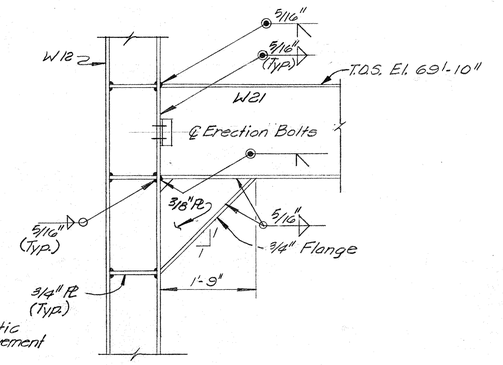

DETAIL D/9
SCALE: 3/4" = 1'-0"

W. W. RECORDS MICROFILM DATE 7-21-83

REVISION	DATE	DESCRIPTION	APPROVED BINKLEY & HOLMES	APPROVED CITY OF HOUSTON
1	5-2-82	Extended Platform for Access To Door (5)	KRL	

JOB NO. 3850-1

CITY OF HOUSTON
DEPARTMENT OF PUBLIC WORKS

ALMEDA SIMS
SLUDGE DISPOSAL PLANT
TRUCK LOADING FACILITY

LOADING STRUCTURE SECTIONS

RECOMMENDED FOR APPROVAL:
Kenneth R. Linsey
BINKLEY & HOLMES, INC. CONSULTING ENGINEERS

STATE OF TEXAS — KENNETH R. LINSEY — 31158 — REGISTERED PROFESSIONAL ENGINEER

STATE OF TEXAS — JAMES W. WINDA — 53131 — REGISTERED PROFESSIONAL ENGINEER

APPROVED:

Wishwa Bahl — WASTEWATER	PAVING
WATER	Jerry D. Peters — CONSTRUCTION
STORM SEWER	
Carla C. Shaw — ASST. DIRECTOR	Jimmie Schindewolf — DIRECTOR

DESIGNED BY: J.A.J. SCALE: AS SHOWN
DRAWN BY: J.W. & D.R. DATE: JULY 1981
CHECKED BY: K.R.L. DRAWING NO.
SHEET SHEET NO. 9 OF 23

DWG. NO. 26733

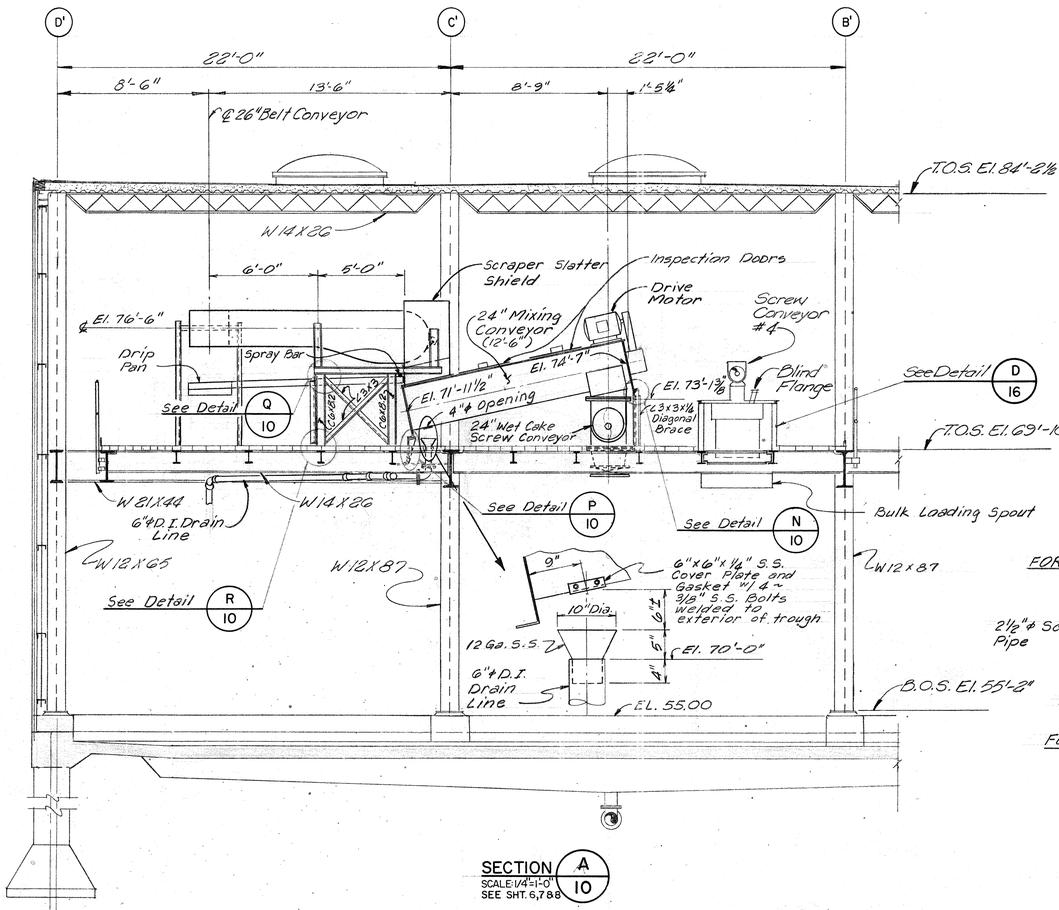

SECTION A
SCALE: 1/4"=1'-0"
SEE SHT. 6, 7 & 8

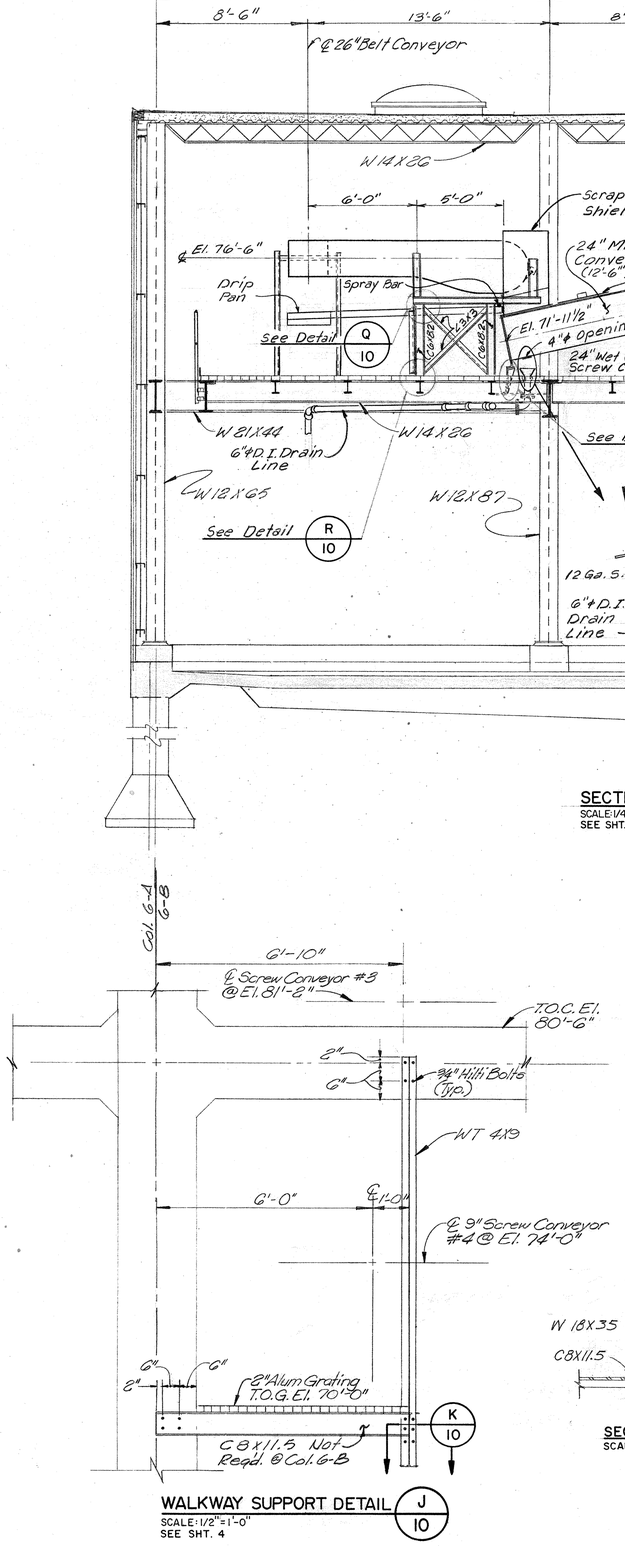

WALKWAY SUPPORT DETAIL J 10
SCALE: 1/2"=1'-0"
SEE SHT. 4

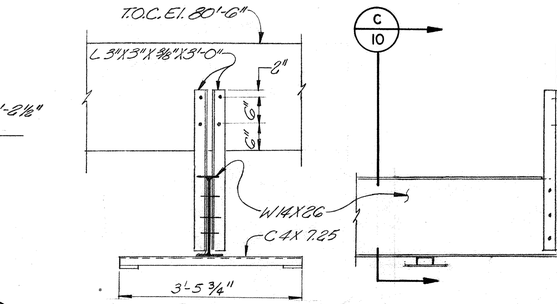

SECTION C 10 ELEVATION

CONVEYOR SUPPORT DETAIL B 10
SCALE: 3/4"=1'-0"
SEE SHT. 4

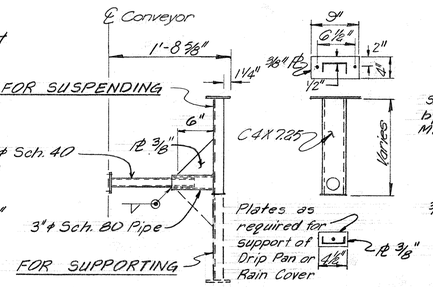

CONVEYOR SUPPORT DETAIL D 10
SCALE: 1"=1'-0"
SEE SHT. 4

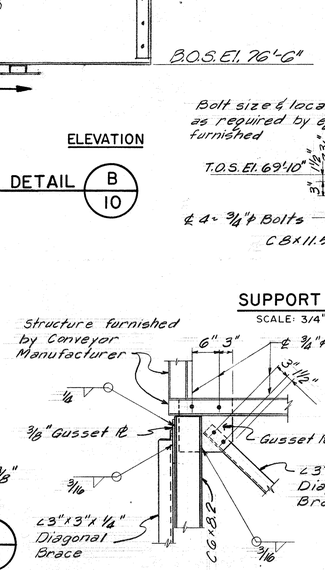

SUPPORT DETAIL P 10
SCALE: 3/4"=1'-0"

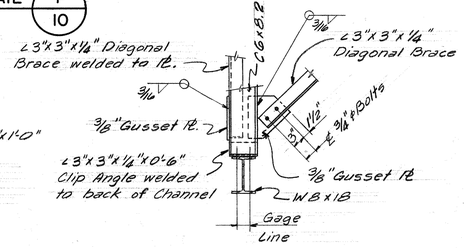

DETAIL R 10
SCALE: 3/4"=1'-0"

½" Galv. Pipe w/ 1/16" Drilled Holes @ 45° from Vert. (2 Pipes Req'd. w/ Holes on Both Sides & 2 Req'd. w/ Holes on 1 Side)

DETAIL Q 10
SCALE: 3/4"=1'-0"

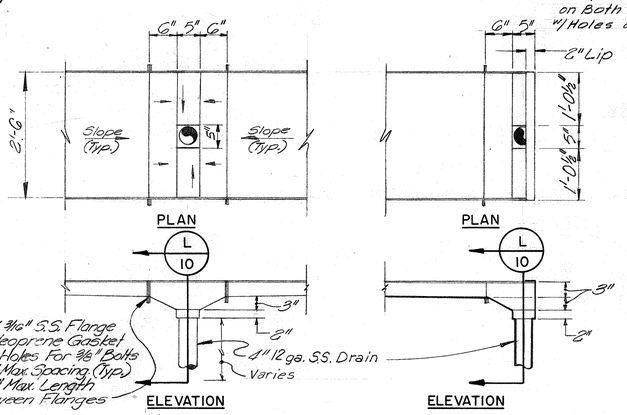

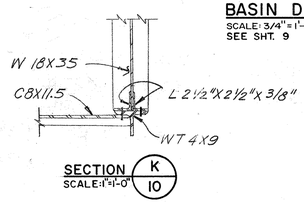

SECTION K 10
SCALE: 1"=1'-0"

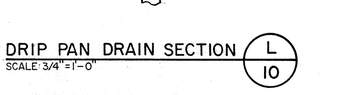

DRIP PAN DRAIN SECTION L 10
SCALE: 3/4"=1'-0"

SECTION G 10
SCALE: NONE

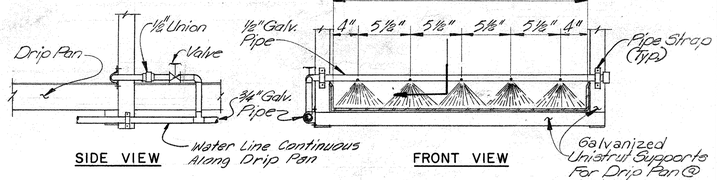

SPRAY BAR DETAILS H 10
SCALE: 1-1/2"=1'-0"
SEE SHT. 4

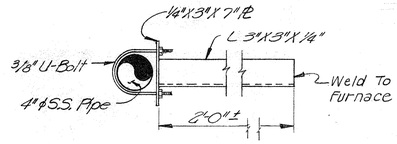

DRIP PAN PIPE SUPPORT DETAIL M 10
SCALE: 1-1/2"=1'-0"
SEE SHT. 4

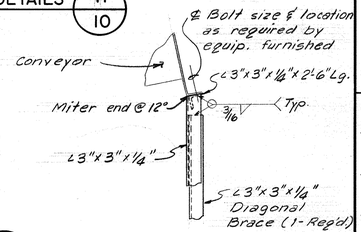

SUPPORT DETAIL N 10
SCALE: 3/4"=1'-0"

NOTE:
Hot Dip Galvanize Structural Steel After Fabrication Unless Otherwise Noted.

JOB NO. 3850-1

CITY OF HOUSTON
DEPARTMENT OF PUBLIC WORKS

ALMEDA SIMS
SLUDGE DISPOSAL PLANT
TRUCK LOADING FACILITY

LOADING STRUCTURE SECTIONS AND MISCELLANEOUS DETAILS

RECOMMENDED FOR APPROVAL:
Kenneth R. Lindsey
BINKLEY & HOLMES, INC. CONSULTING ENGINEERS

STATE OF TEXAS · KENNETH R. LINDSEY · 31158 · REGISTERED PROFESSIONAL ENGINEER

STATE OF TEXAS · JOSEPH LINDA · 47247 · REGISTERED PROFESSIONAL ENGINEER

APPROVED:

WASTEWATER	PAVING & CONSTRUCTION
WATER	
STORM SEWER	
ASST. DIRECTOR	DIRECTOR

DESIGNED BY: J.A.J. SCALE: AS SHOWN
DRAWN BY: J.W. DATE: JULY 1981
CHECKED BY: K.R.L. DRAWING NO.
SHEET SHEET NO. 10 OF 23

RECORDS
MICROFILM
DATE 7-21-83

DWG. NO. 26733

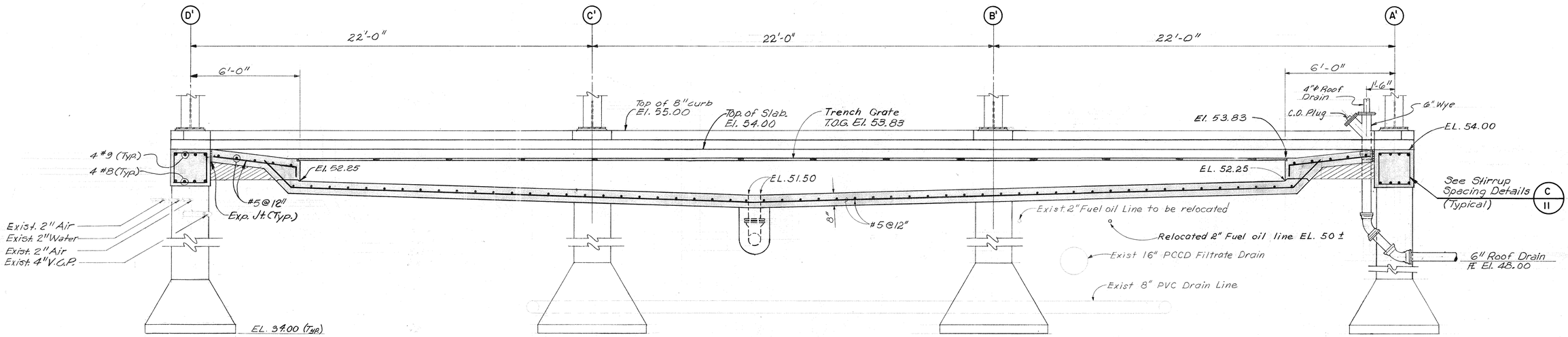

SECTION A / 11
SCALE: 3/8"=1'-0"
SEE SHT. 6

NOTE:
The contractor shall field verify locations, dimensions and elevations of existing structures that affect work under this contract.

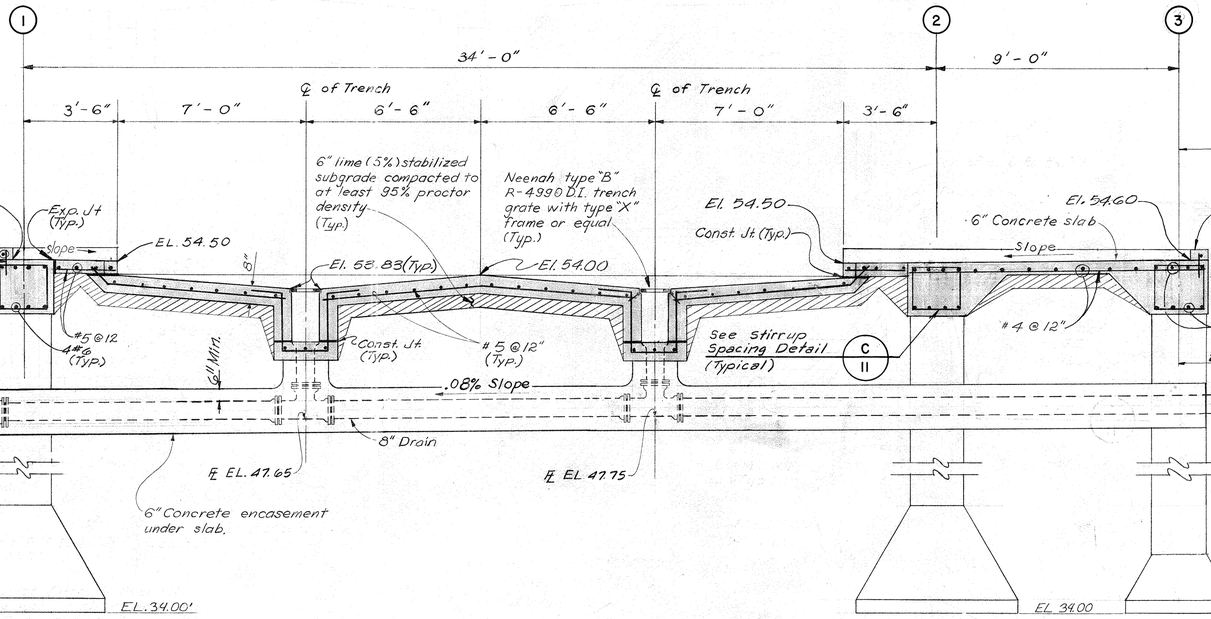

SECTION B / 11
SCALE: 3/8"=1'-0"
SEE SHT. 6

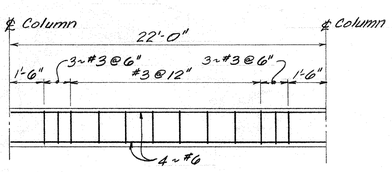

COLUMN LINES 1, 2 & 3

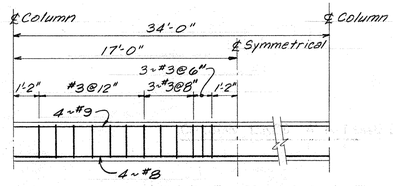

COLUMN LINES A' & D'

STIRRUP SPACING DETAILS C / 11
SCALE: NONE

JOB NO. 3850-1

CITY OF HOUSTON
DEPARTMENT OF PUBLIC WORKS

ALMEDA SIMS
SLUDGE DISPOSAL PLANT
TRUCK LOADING FACILITY

LOADING STRUCTURE
GROUND FLOOR SECTIONS

RECOMMENDED FOR APPROVAL:
Kenneth R. Lindsey
BINKLEY & HOLMES, INC. CONSULTING ENGINEERS

STATE OF TEXAS — KENNETH R. LINDSEY — 31158 — REGISTERED PROFESSIONAL ENGINEER

STATE OF TEXAS — JOSEPH A. LANDA — 57127 — REGISTERED PROFESSIONAL ENGINEER

APPROVED:

WASTEWATER
WATER
STORM SEWER
ASST. DIRECTOR

PAVING
CONSTRUCTION
DIRECTOR

DESIGNED BY: J.A.L. SCALE: AS SHOWN
DRAWN BY: M.A.A. DATE: JULY 1981
CHECKED BY: K.R.L. DRAWING NO.
SHEET SHEET NO. 11 OF 23

DWG. NO. 26733

RECORDS FILM DATE 7-21-83

Note:
1. Hot Dip Galvanize Structural Steel After Fabrication Unless Noted Otherwise.

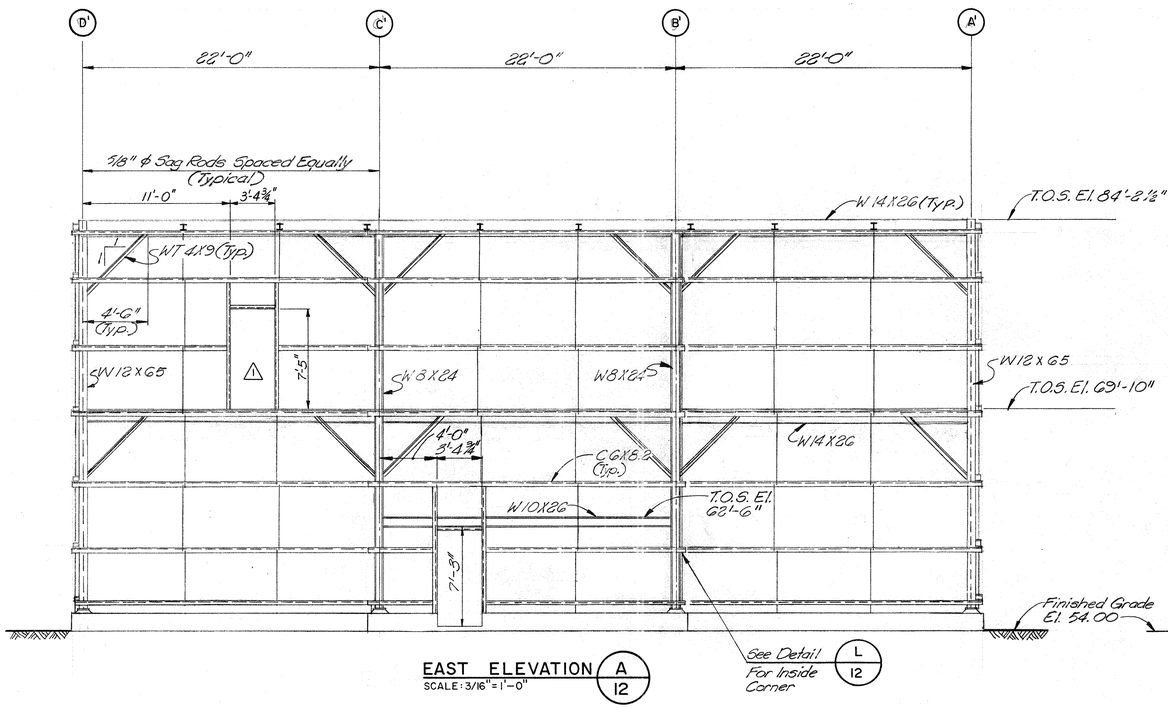

EAST ELEVATION A / 12
SCALE: 3/16" = 1'-0"

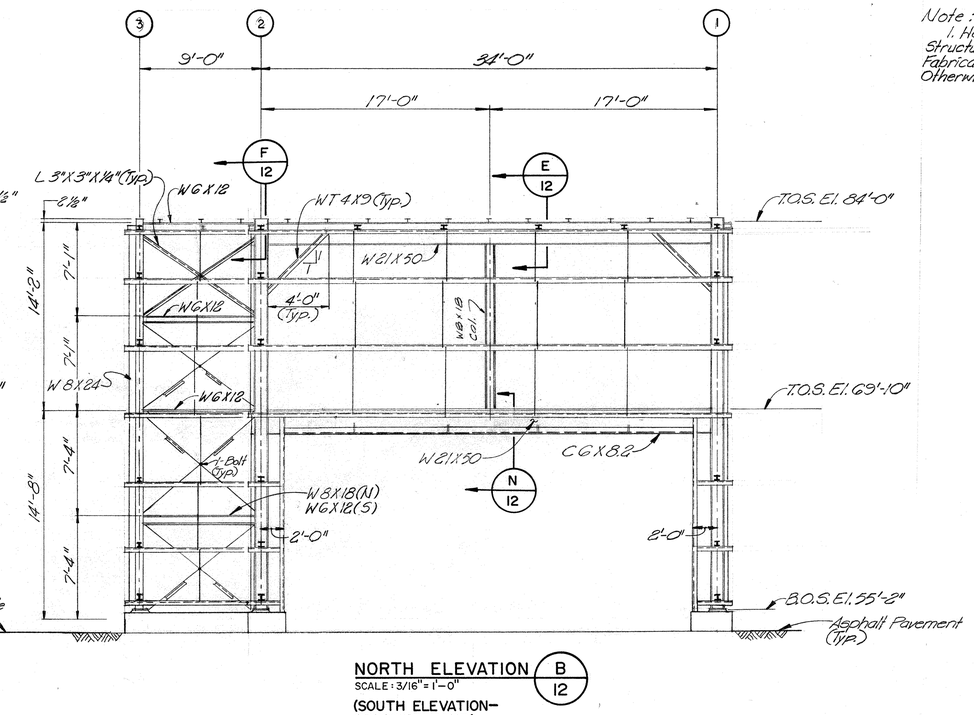

NORTH ELEVATION B / 12
SCALE: 3/16" = 1'-0"
(SOUTH ELEVATION— OPPOSITE HAND)

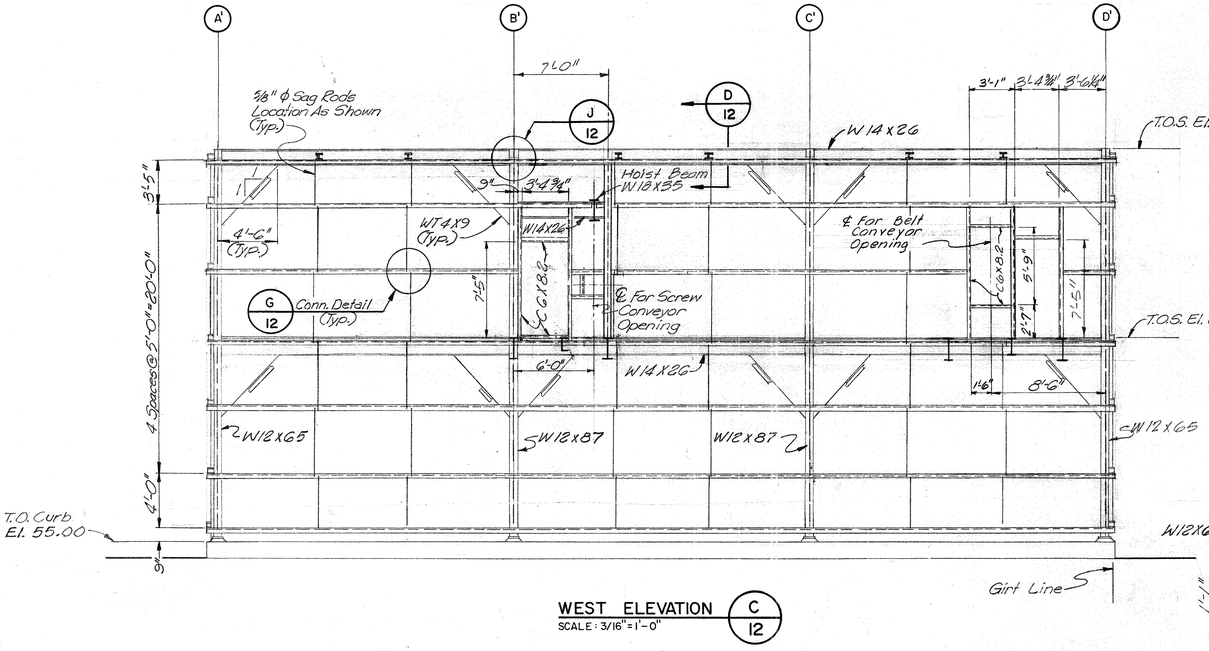

WEST ELEVATION C / 12
SCALE: 3/16" = 1'-0"

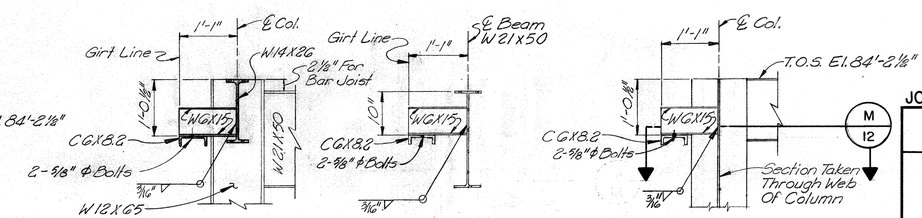

SECTION D / 12
SCALE: 3/4" = 1'-0"

SECTION E / 12
SCALE: 3/4" = 1'-0"

SECTION F / 12
SCALE: 3/4" = 1'-0"

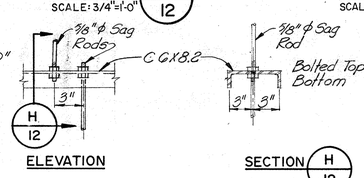

ELEVATION

SECTION H / 12

CONNECTION DETAIL G / 12
SCALE: 1-1/2" = 1'-0"

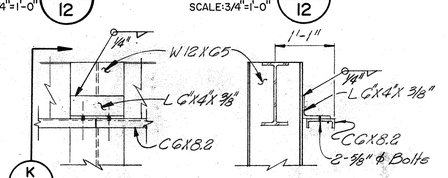

ELEVATION

SECTION K / 12

CONNECTION DETAIL J / 12
SCALE: 3/4" = 1'-0"

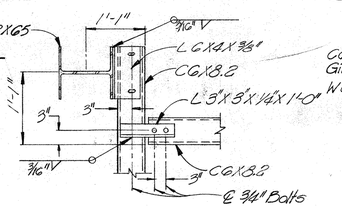

PLAN SECTION

CORNER CONNECTION DETAIL L / 12
SCALE: NONE

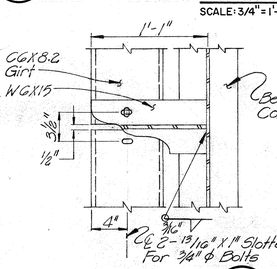

TYPICAL SECTION M / 12
SCALE: NONE

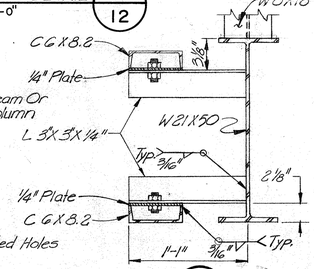

SECTION N / 12
SCALE: 1-1/2" = 1'-0"

REVISION	DATE	DESCRIPTION	APPROVED BINKLEY & HOLMES	APPROVED CITY OF HOUSTON
1	5-2-82	Added Framing for Door (5)	K R L	

JOB NO. 3850-1

CITY OF HOUSTON
DEPARTMENT OF PUBLIC WORKS

ALMEDA SIMS
SLUDGE DISPOSAL PLANT
TRUCK LOADING FACILITY

LOADING STRUCTURE FRAMING ELEVATIONS AND DETAILS

RECOMMENDED FOR APPROVAL:
Kenneth R. Lindsey
BINKLEY & HOLMES, INC. CONSULTING ENGINEERS

STATE OF TEXAS — KENNETH R. LINDSEY — 31153 — REGISTERED PROFESSIONAL ENGINEER

STATE OF TEXAS — JAMES A. LINDA — 49101 — REGISTERED PROFESSIONAL ENGINEER

APPROVED:

WASTEWATER	PAVING
WATER	CONSTRUCTION
STORM SEWER	
ASST. DIRECTOR	DIRECTOR

DESIGNED BY: J.A.J. SCALE: AS SHOWN
DRAWN BY: D.R.& J.W. DATE: JULY 1981
CHECKED BY: K.R.L. DRAWING NO.
SHEET SHEET NO. 12 OF 23

DWG. NO. 26733

Notes:
1. Hot Dip Galvanize All Structural Steel After Fabrication Unless Otherwise Noted.

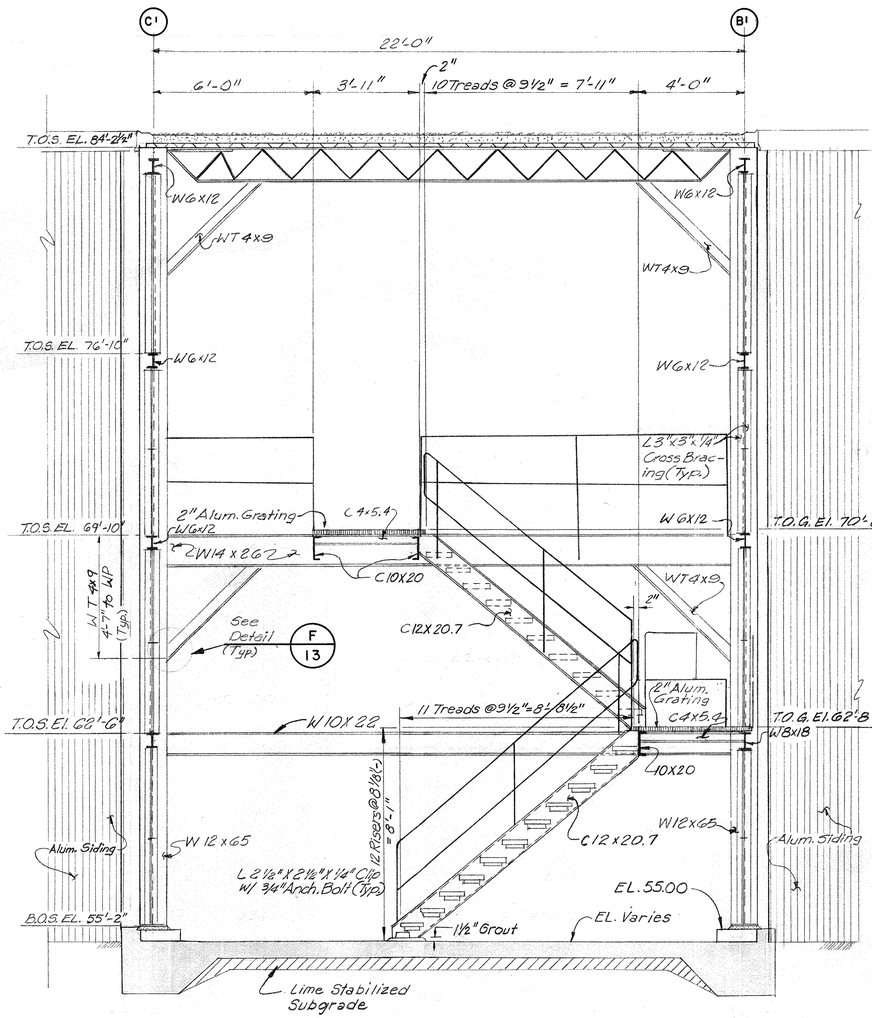

SECTION A
SCALE: 3/8"=1'-0"
SEE SHT. 6,7 & 8 — 13

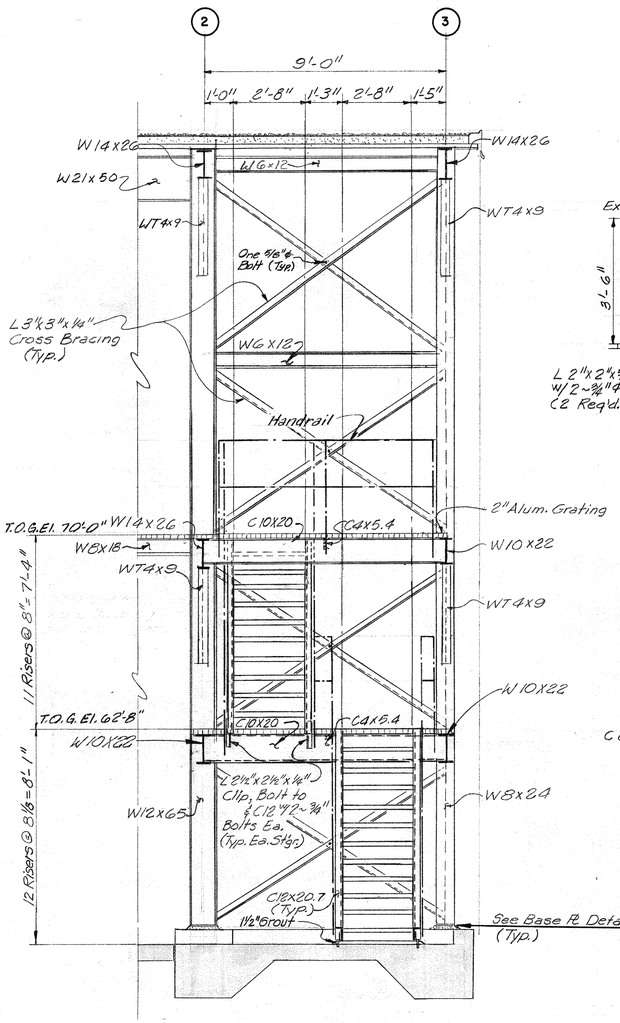

SECTION B
SCALE: 3/8"=1'-0"
SEE SHT. 6,7 & 8 — 13

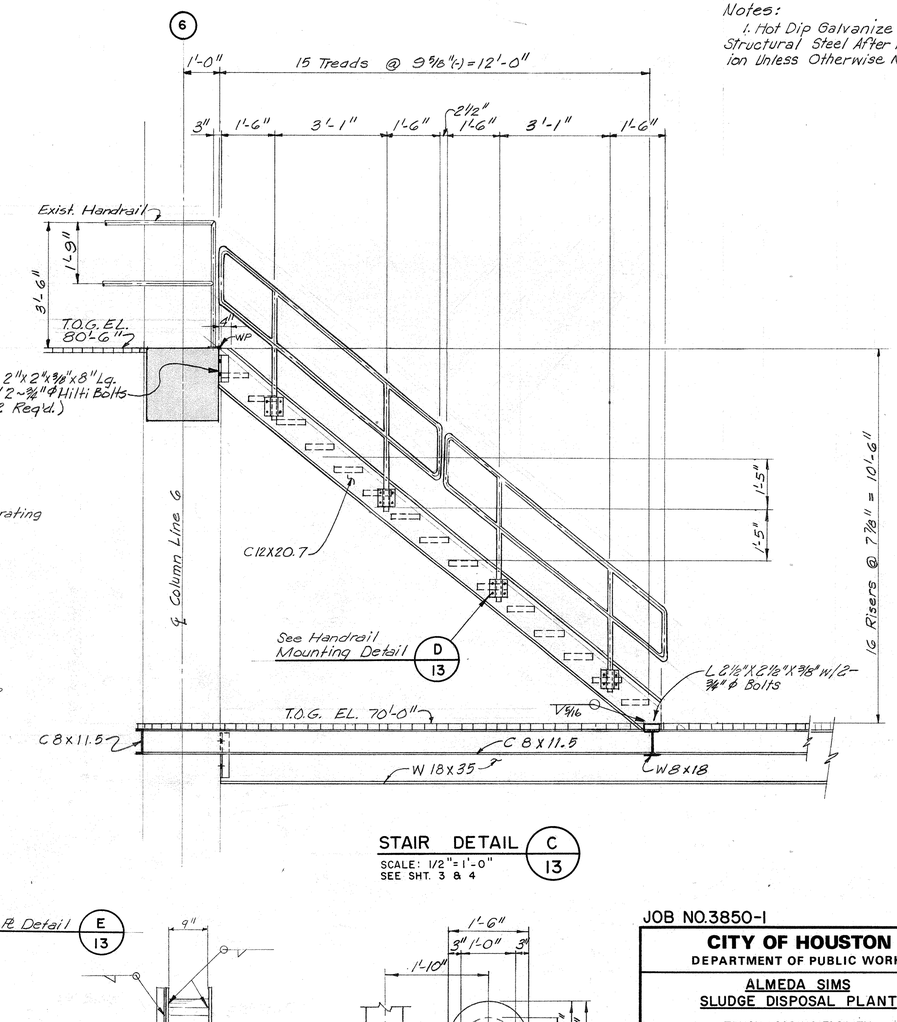

STAIR DETAIL C/13
SCALE: 1/2"=1'-0"
SEE SHT. 3 & 4

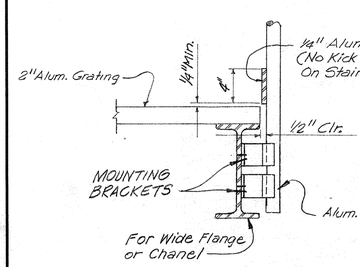

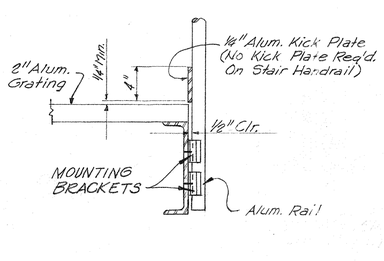

HANDRAIL MOUNTING DETAILS D/13
SCALE: 1 1/2" = 1'-0"

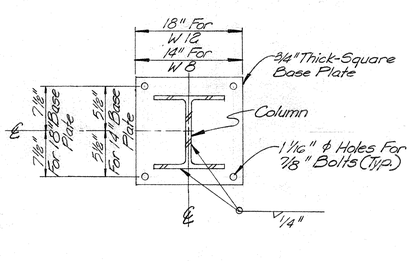

BASE PLATE DETAIL E/13
SCALE: NONE

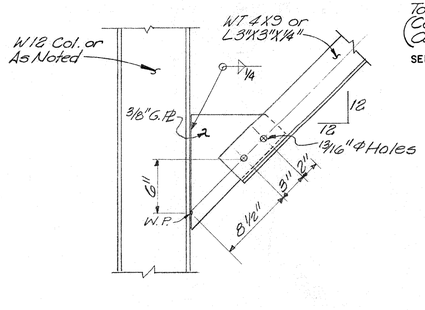

BRACKET DETAIL F/13
SCALE: 1 1/2" = 1'-0"

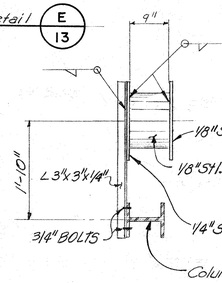

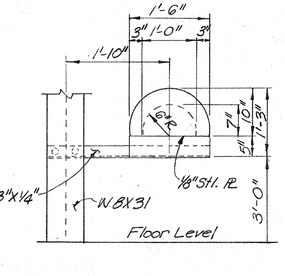

HOSE RACK DETAIL G/13
SCALE: 3/4"=1'-0"
Total Of 2 Required
(Col. C'-1 @ El. 73'-0" ±)
(Col B'-1 @ El. 57'-0" ±)
SEE SHT. 6 & 7

JOB NO. 3850-1

CITY OF HOUSTON
DEPARTMENT OF PUBLIC WORKS

ALMEDA SIMS
SLUDGE DISPOSAL PLANT
TRUCK LOADING FACILITY

STAIRWELL SECTIONS AND DETAILS

RECOMMENDED FOR APPROVAL:
Kenneth R. Linsley
BINKLEY & HOLMES, INC. CONSULTING ENGINEERS

STATE OF TEXAS — KENNETH R. LINSLEY — 31158 — REGISTERED PROFESSIONAL ENGINEER

STATE OF TEXAS — JOSEPH D. LANDA — 43237 — LICENSED PROFESSIONAL ENGINEER

APPROVED:

Victor a Ball — WASTEWATER	PAVING CONSTRUCTION
WATER	
STORM SEWER	
ASST. DIRECTOR	DIRECTOR

DESIGNED BY: J.A.J. SCALE: AS SHOWN
DRAWN BY: J.W. & D.R. DATE: JULY 1981
CHECKED BY: K.R.L. DRAWING NO.
SHEET SHEET NO. 13 OF 23

W. W. RECORDS MICROFILM DATE 7-21-83

DWG. NO. 26733

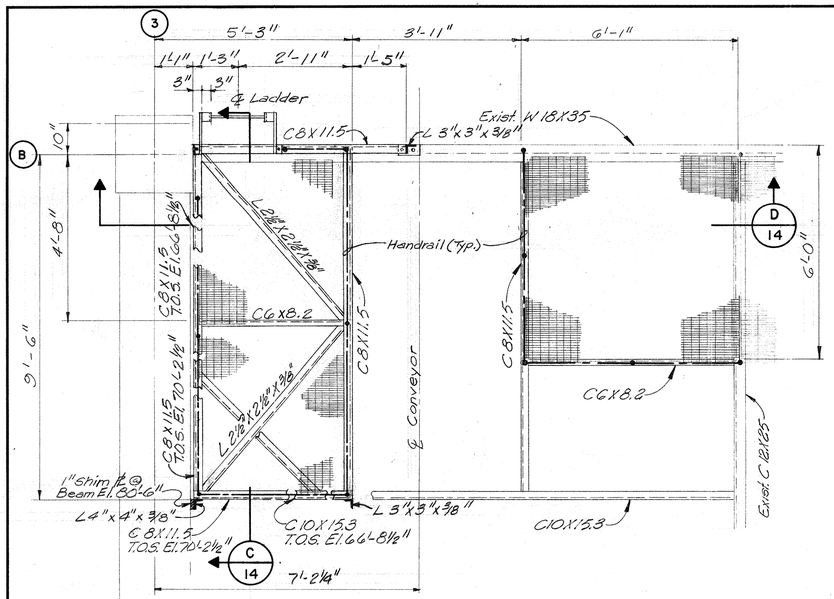

PLAN AT ELEV. 70'-4" A 14

SCALE: 1/2"= 1'-0"
SEE SHT. 3

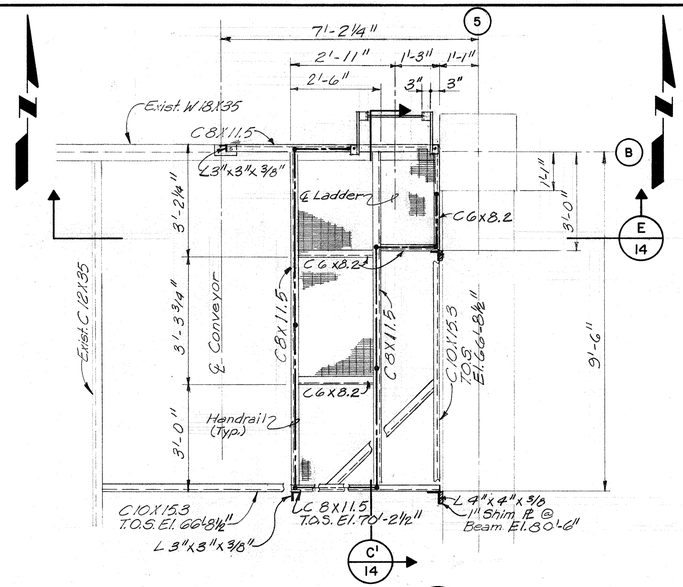

PLAN AT ELEV. 70'-4" B 14

SCALE: 1/2"= 1'-0"
SEE SHT. 3

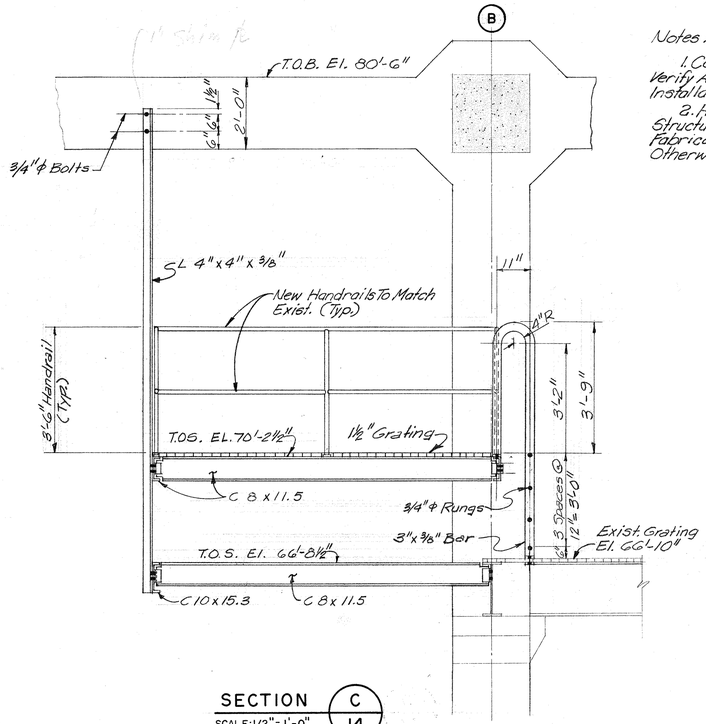

SECTION C 14

SCALE: 1/2"= 1'-0"
(AS SHOWN)

Notes:

1. Contractor To Field Verify All Dimensions For Installation Of Platforms.
2. Hot Dip Galvanize Structural Steel After Fabrication Unless Noted Otherwise.

SECTION D 14

SCALE: 1/2"= 1'-0"

SECTION E 14

SCALE: 1/2"= 1'-0"

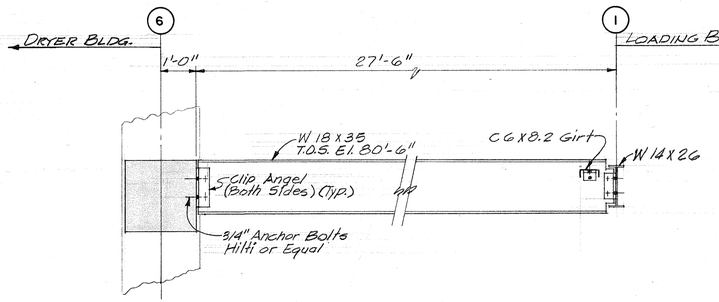

HOIST BEAM DETAIL J 14

SCALE: 1/2" = 1'-0"

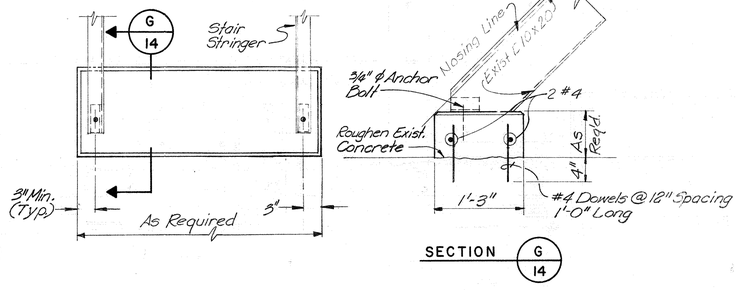

STAIR PAD DETAILS F 14

SCALE: 1"= 1'-0"
SEE SHT. 3

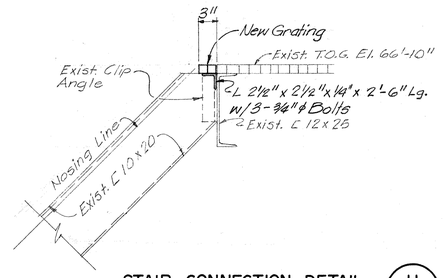

STAIR CONNECTION DETAIL H 14

SCALE: 1"= 1'-0"
SEE SHT. 3

NOTE: Contractor to Drill Holes in Exist. 12" Channel to Match Holes in Exist. Clip Angle.

JOB NO. 3850-1

CITY OF HOUSTON
DEPARTMENT OF PUBLIC WORKS

ALMEDA SIMS
SLUDGE DISPOSAL PLANT
TRUCK LOADING FACILITY

PLATFORM PLAN AND SECTIONS

RECOMMENDED FOR APPROVAL:
Kenneth R. Lindsey
BINKLEY & HOLMES, INC. CONSULTING ENGINEERS

STATE OF TEXAS — KENNETH R. LINDSEY — 51158 — REGISTERED PROFESSIONAL ENGINEER

STATE OF TEXAS — LINDA — 59630 — LICENSED PROFESSIONAL ENGINEER

APPROVED:

Vishwa Bahe	
WASTEWATER	PAVING
WATER	CONSTRUCTION
STORM SEWER	
ASST. DIRECTOR	DIRECTOR

DESIGNED BY: J.A.J. SCALE: AS SHOWN
DRAWN BY: J.S.F. DATE: JULY 1981
CHECKED BY: K.R.L. DRAWING NO.
SHEET SHEET NO. 14 OF 23

DWG. NO. 26733

W. W. RECORDS MICROFILM DATE 7-21-83

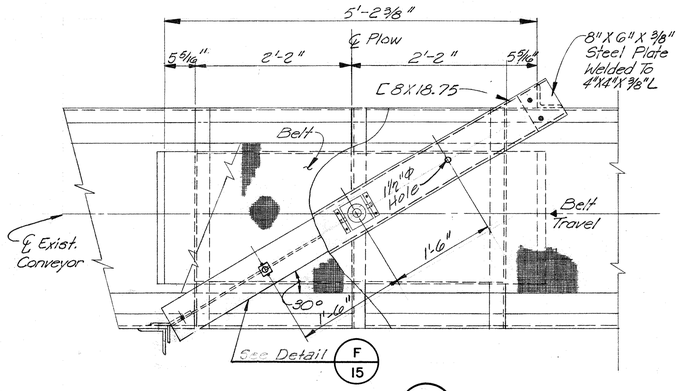

BELT PLOW PLAN A 15
SCALE : 1" = 1'-0"
SEE SHT. 3

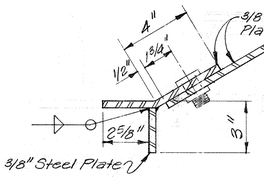

DETAIL C 15
SCALE: 1/4"=1'

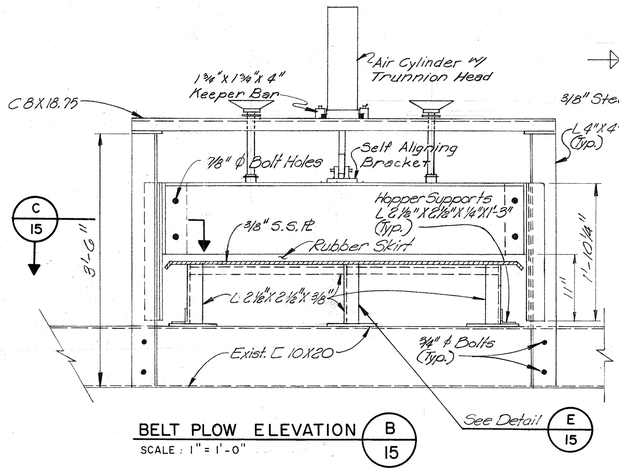

BELT PLOW ELEVATION B 15
SCALE : 1" = 1'-0"

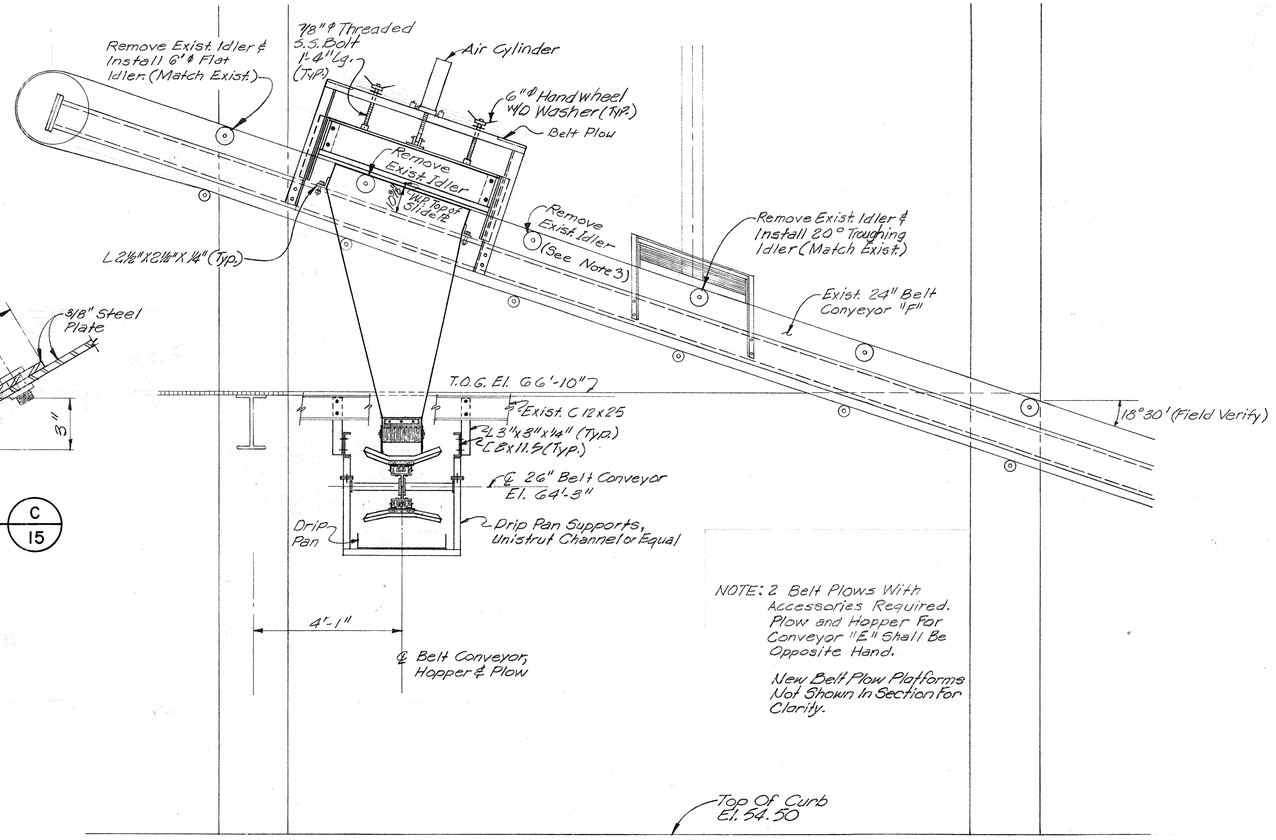

NOTE: 2 Belt Plows With Accessories Required. Plow and Hopper For Conveyor "E" Shall Be Opposite Hand.

New Belt Plow Platforms Not Shown In Section for Clarity.

NOTES:

1. Contractor Shall Field Verify All Dimensional Ties To Existing Platforms and Equipment.
2. Hot Dip Galvanize Structural Steel After Fabrication Unless Noted Otherwise.
3. Deliver Removed Idlers To Plant Maintenance Department.
4. Holes Req'd For Existing Structural Members Shall Be Drilled.

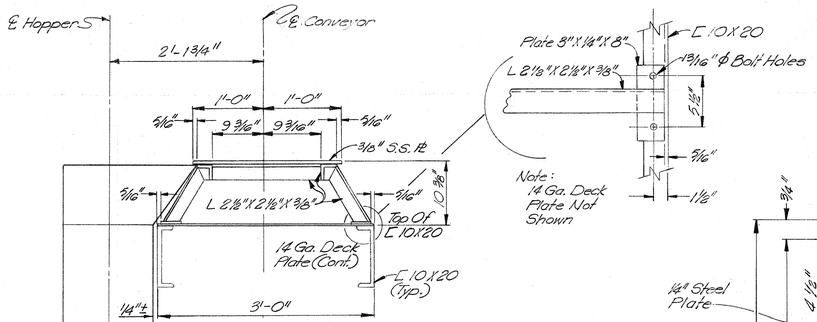

DETAIL E 15
SCALE: 1"=1'-0"

PLOW PLATE DETAIL F 15
SCALE: 1"=1'-0"

SECTION D 15
SCALE: 1/2"=1'-0"
SEE SHT. 3

SECTION D' 15
OPPOSITE HAND
SEE SHT. 3

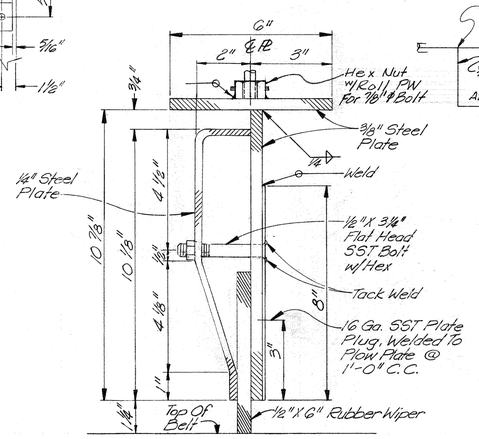

SECTION G 15
SCALE: 3/8"=1'

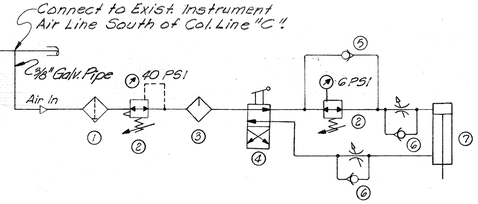

① Air Filter
② Air Regulator
③ Air Lubricator
④ Directional Control Valve
⑤ Check Valve
⑥ Flow Control Valve
⑦ Cylinder 3 1/4" Bore, 1" Rod, 12" Stroke

NOTE:
Mount Control Valve Adjacent to Each Plow.

AIR CYLINDER CONTROL SCHEMATIC H 15

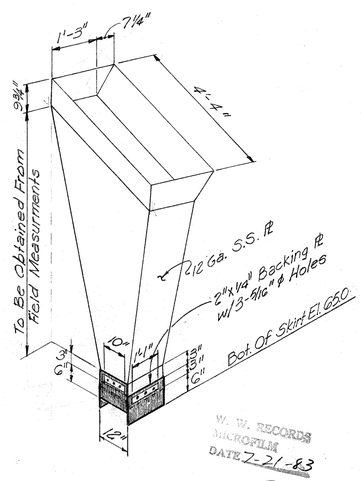

HOPPER-ISOMETRIC J 15
SCALE: 1/2" = 1'-0"
★ See Note 1
SEE SHT. 4

JOB NO. 3850-1

CITY OF HOUSTON
DEPARTMENT OF PUBLIC WORKS

ALMEDA SIMS SLUDGE DISPOSAL PLANT

TRUCK LOADING FACILITY

BELT PLOW AND HOPPER SECTIONS AND DETAILS

RECOMMENDED FOR APPROVAL:
Kenneth R. Linsley
BINKLEY & HOLMES, INC. CONSULTING ENGINEERS

KENNETH R. LINSLEY — STATE OF TEXAS — REGISTERED PROFESSIONAL ENGINEER
JAMES A. JOHNSON — STATE OF TEXAS — REGISTERED PROFESSIONAL ENGINEER

APPROVED:

Vishwa Bala — WASTEWATER	PAVING
WATER	CONSTRUCTION
STORM SEWER	
ASST. DIRECTOR	DIRECTOR

DESIGNED BY: J.A.J.	SCALE: AS SHOWN
DRAWN BY: D.R.	DATE: JULY 1981
CHECKED BY: K.R.L.	DRAWING NO.
SHEET	SHEET NO. 15 OF 23

DWG. NO. 26733

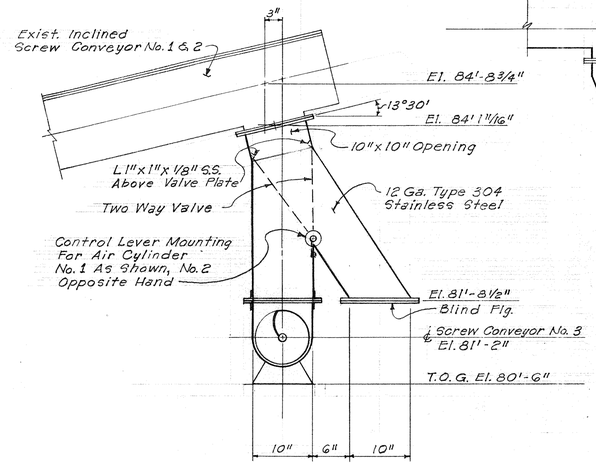

SECTION A
SCALE: 1" = 1'-0"
SEE SHEET 4

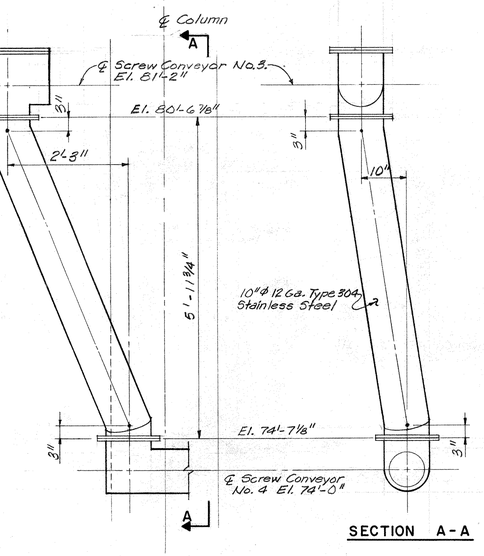

SECTION A-A

DETAIL B
SCALE: 3/4" = 1'-0"
SEE SHT. 4

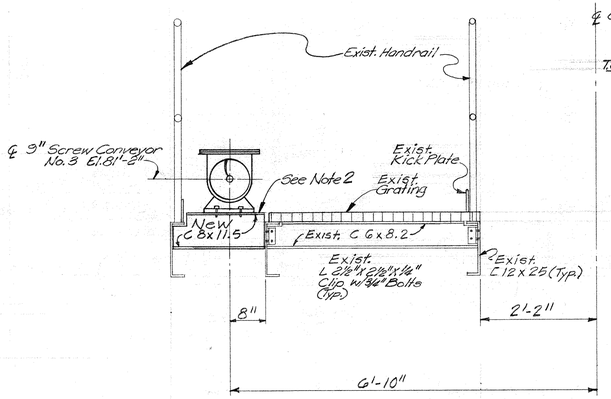

DETAIL C
SCALE: 3/4" = 1'-0"
SEE SHT. 4

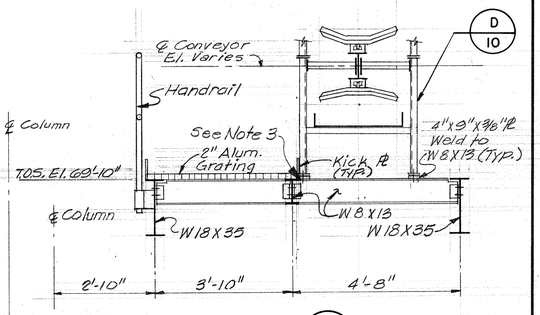

SECTION M
SCALE: 1/2" = 1'-0"
SEE SHT. 7

NOTES:

1. Hot Dip Galvinize Structural Steel After Fabrication Unless Otherwise Noted.
2. Cut Grating For Conveyor Support W/Maximum Opening of 1" Between Equipment Support and Grating. Weld New C 8X11.5 to Existing Members. Clean and Prime Coat With Carboline 655, SRC or Equal.
3. Cope W8X13 As Req'd. At Conveyor Supports.

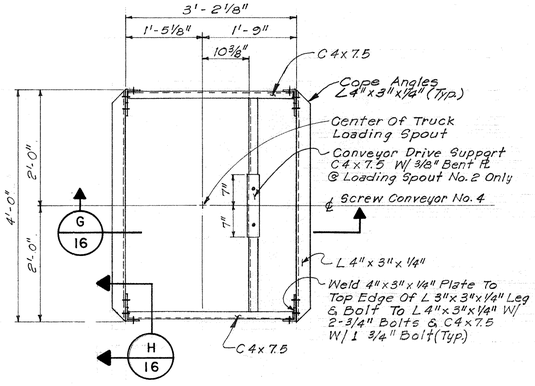

PLAN LOADING SPOUT SUPPORT D
SCALE: 3/4" = 1'-0"
SEE SHEET 7

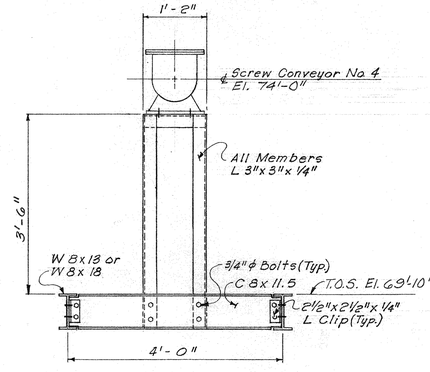

CONVEYOR SUPPORT DETAIL E
SCALE: 3/4" = 1'-0"
SEE SHT. 7

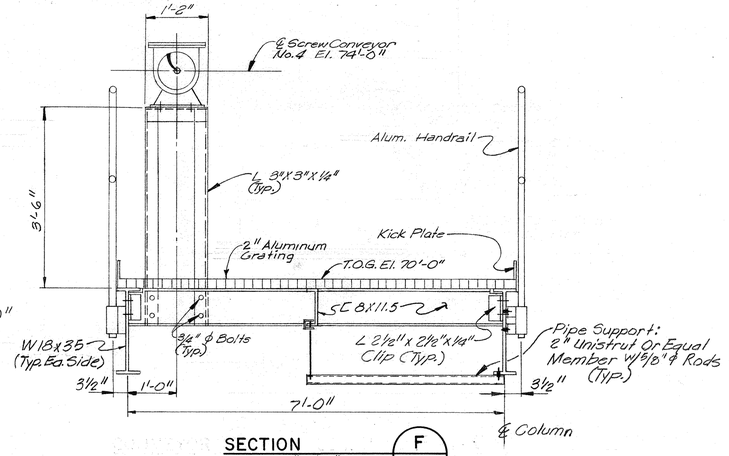

SECTION F
SCALE: 3/4" = 1'-0"
SEE SHT. 7

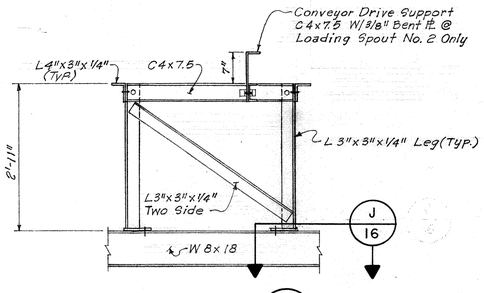

SECTION G
SCALE: 3/4" = 1'-0"
SEE SHEET 4

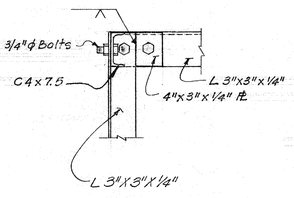

SECTION H
SCALE: 1-1/2" = 1'-0"
SEE SHT. 4

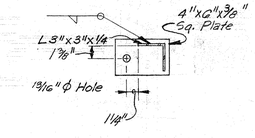

SECTION J
SCALE: 1-1/2" = 1'-0"
SEE SHT. 4

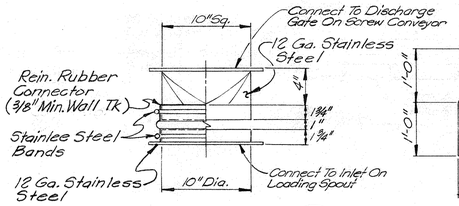

DETAIL K
SCALE: 1-1/2" = 1'-0"
SEE SHT. 9

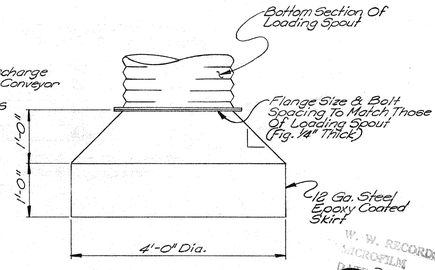

LOADING SPOUT SKIRT DETAIL L
SCALE: 3/4" = 1'-0"
SEE SHT. 9

JOB NO. 3850

CITY OF HOUSTON
DEPARTMENT OF PUBLIC WORKS

ALMEDA SIMS
SLUDGE DISPOSAL PLANT
TRUCK LOADING FACILITY

MISCELLANEOUS SECTIONS AND DETAILS

RECOMMENDED FOR APPROVAL:
Kenneth R. Lindsey
BINKLEY & HOLMES, INC. CONSULTING ENGINEERS

STATE OF TEXAS — KENNETH R. LINDSEY — 51158 — REGISTERED PROFESSIONAL ENGINEER
STATE OF TEXAS — JOSEPH A. GANDA — 42937 — REGISTERED PROFESSIONAL ENGINEER

APPROVED:

Victor Ball — WASTEWATER	PAVING
WATER	CONSTRUCTION
STORM SEWER	
ASST. DIRECTOR	DIRECTOR

W. W. RECORDS MICROFILM DATE 7-21-83

DESIGNED BY: J.A.J. SCALE: AS SHOWN
DRAWN BY: J.S.F. & D.R. DATE: JULY 1981
CHECKED BY: K.R.L. DRAWING NO.
SHEET SHEET NO. 16 OF 23

DWG. NO. 26733

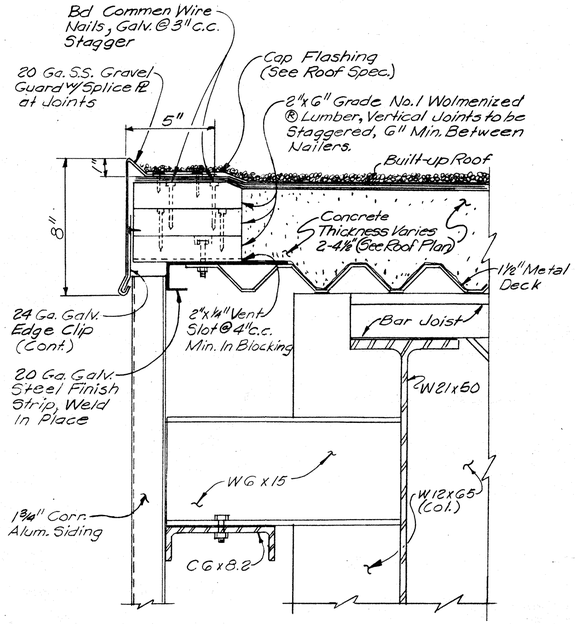

EAVE SECTION A
SCALE: 3" = 1'-0"

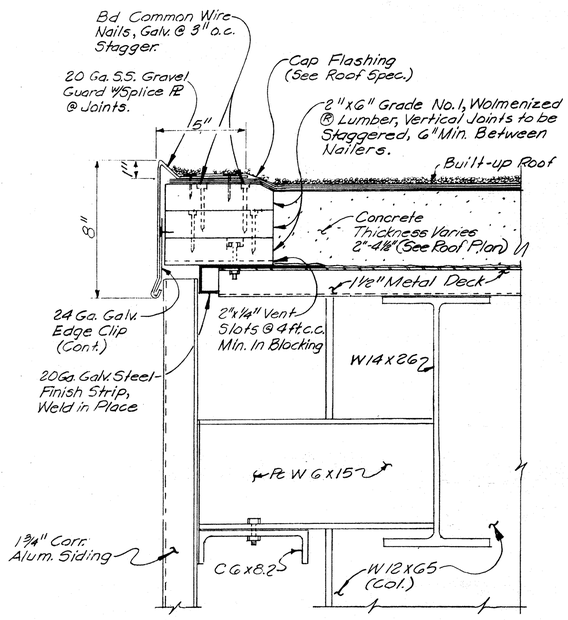

EAVE SECTION B
SCALE: 3" = 1'-0"

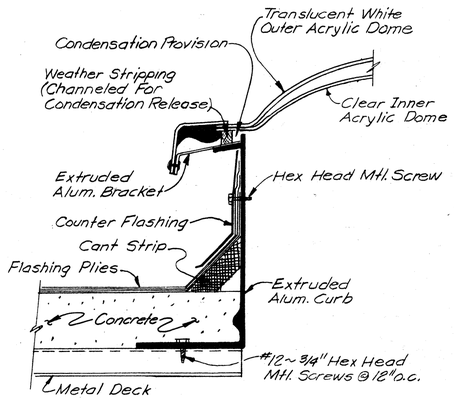

SKLIGHT DETAIL C
SCALE: 3" = 1'-0"

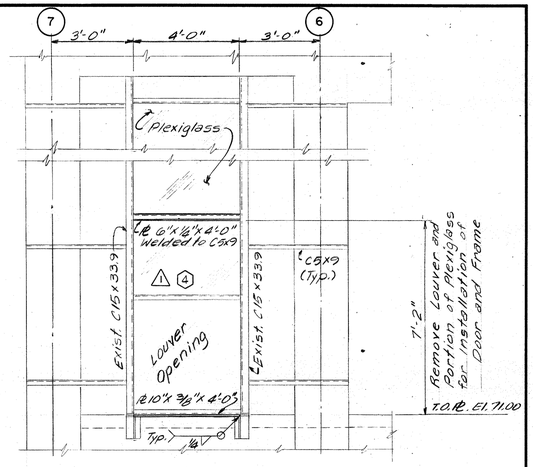

SECTION K
SCALE: 3/8" = 1'-0"

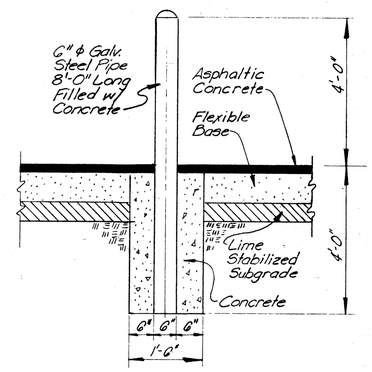

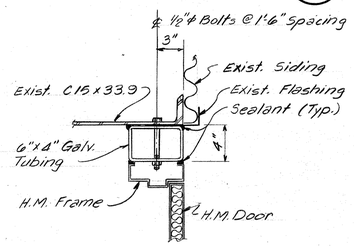

JAMB SECTION L
SCALE: 1 1/2" = 1'-0"

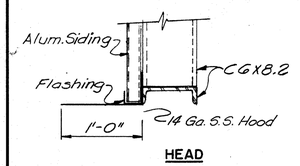

HEAD

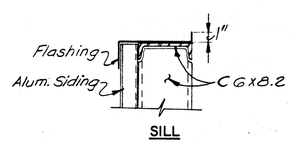

SILL

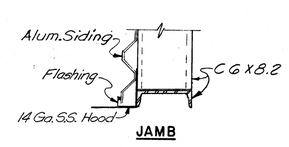

JAMB

CONVEYOR OPENING DETAILS D
SCALE: 1 1/2" = 1'-0"

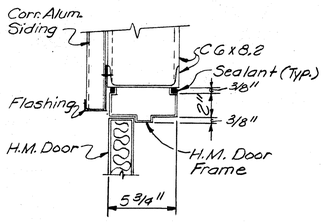

HEAD — DOOR NO. 1, 2, 3 & 5 ⚠

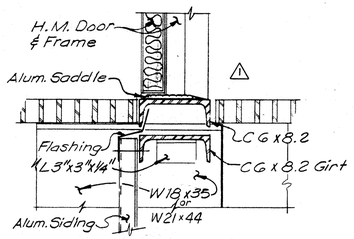

SILL — DOOR NO. 2, 3 & 5

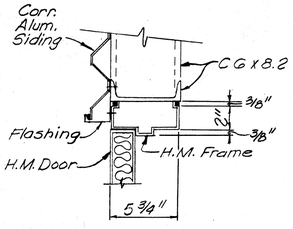

JAMB — DOOR NO. 1, 2, 3 & 5 ⚠

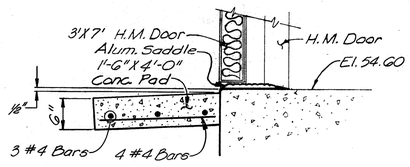

SILL — DOOR NO. 1

DOOR OPENING DETAILS G
SCALE: NONE

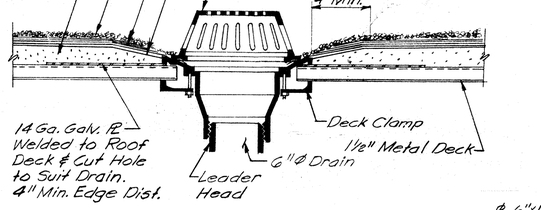

ROOF DRAIN DETAIL F
SCALE: 1 1/2" = 1'-0"

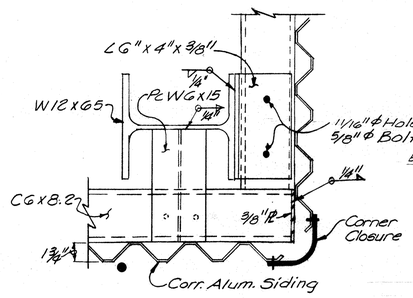

CORNER DETAIL H
SCALE: 1-1/2" = 1'-0"

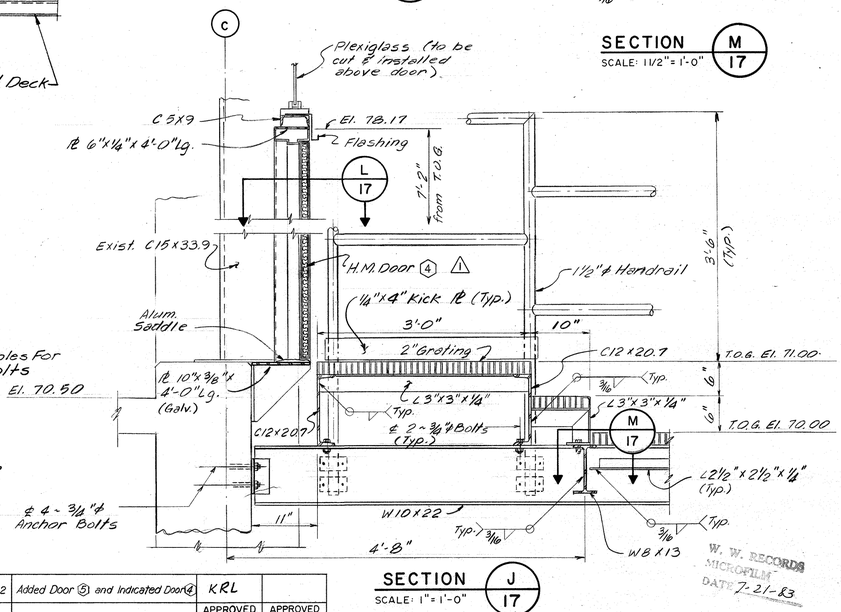

SECTION J
SCALE: 1" = 1'-0"

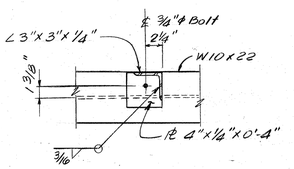

SECTION M
SCALE: 1 1/2" = 1'-0"

PIPE GUARD DETAIL E
SCALE: NONE

REVISION	DATE	DESCRIPTION	APPROVED BINKLEY & HOLMES	APPROVED CITY OF HOUSTON
⚠	5-2-82	Added Door ⑤ and Indicated Door ④	KRL	

JOB NO. 3850-1

CITY OF HOUSTON
DEPARTMENT OF PUBLIC WORKS

ALMEDA SIMS
SLUDGE DISPOSAL PLANT
TRUCK LOADING FACILITY

ARCHITECTURAL AND MISCELLANEOUS DETAILS

RECOMMENDED FOR APPROVAL:
Kenneth R. Lindsey
BINKLEY & HOLMES, INC. CONSULTING ENGINEERS

STATE OF TEXAS — KENNETH R. LINDSEY — 51158 — REGISTERED PROFESSIONAL ENGINEER
STATE OF TEXAS — JOSEPH L. HAYDEN — 27183 — REGISTERED PROFESSIONAL ENGINEER

APPROVED:

WASTEWATER	PAVING
WATER	CONSTRUCTION
STORM SEWER	
ASST. DIRECTOR	DIRECTOR

DESIGNED BY: J.A.J. — SCALE: AS SHOWN
DRAWN BY: J.W. & J.S.F. — DATE: JULY 1981
CHECKED BY: K.R.L. — DRAWING NO.
SHEET — SHEET NO. 17 OF 23

W. W. RECORDS MICROFILM DATE 7-21-83

DWG. NO. 26733

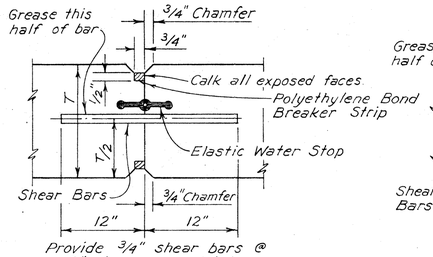

WALLS

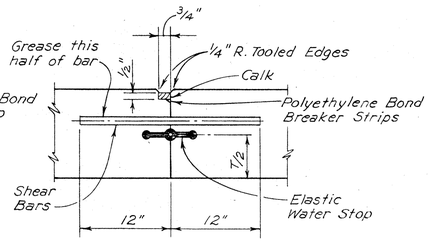

SLABS

CONTRACTION JOINTS

No Scale

Type A - With Elastic Water Stop
Type B - Without Elastic Water Stop

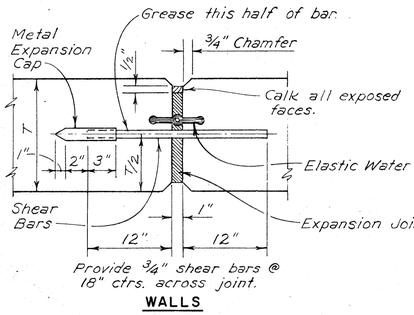

WALLS

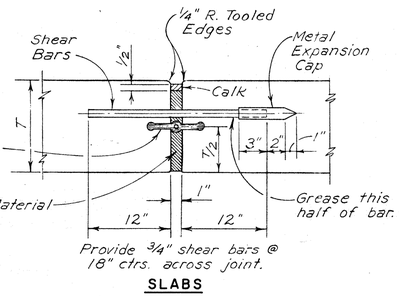

SLABS

EXPANSION JOINTS

No Scale

Type C - With Elastic Water Stop.
Type D - Without Elastic Water Stop.

NOTES: 1. Reinforcing shall not be extended across joint.
2. Shear bars shall be smooth and free from rust or scale.

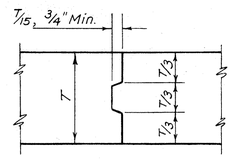

SLABS

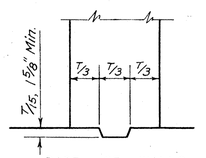

BASE OF WALLS

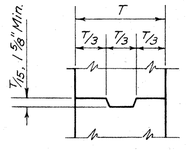

WALLS

JOINTS WITHOUT WATER STOPS

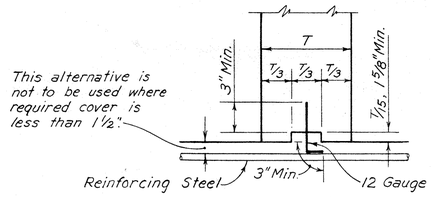

Alternative T ≥ 12"

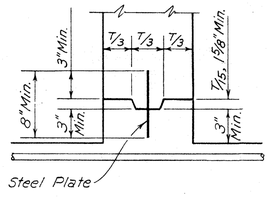

Alternative T ≥ 12"

BASE OF WALLS

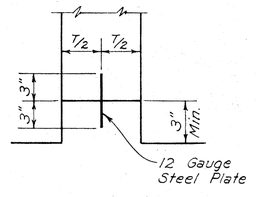

T < 12"

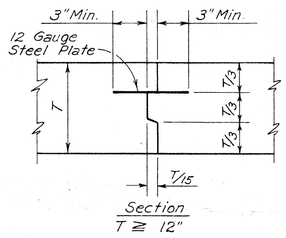

T ≥ 12"

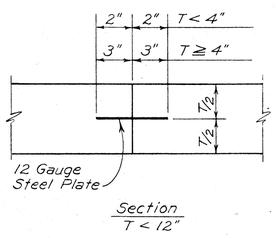

T < 12"

SLABS

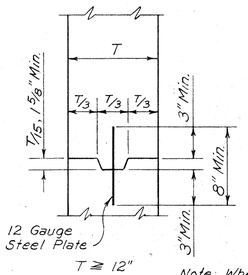

T ≥ 12"

WALLS

Note: Where T is less than 12", omit keys.

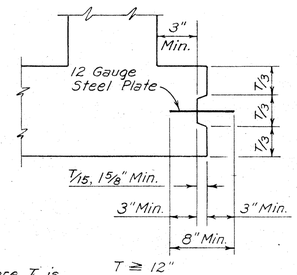

T ≥ 12"

CORNERS

WATERTIGHT JOINTS

TYPICAL CONSTRUCTION JOINTS

NOTE: Reinforcing steel is to be carried across all construction joints.

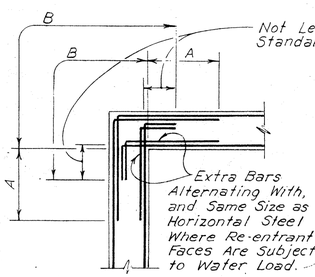

A = 1/5 the clear span distance measured horizontally or vertically, whichever is the smaller; but in no case less than the required length of lapped splices for top bars as shown on this sheet.

B = Sufficient length to permit bars to extend through the wall to the opposite face and terminate in a standard hook.

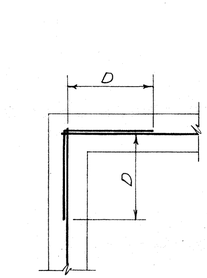

D = Not less than the length required for lapped splices for top bars, as shown on this sheet.

TYPICAL CORNER REINFORCING DETAILS

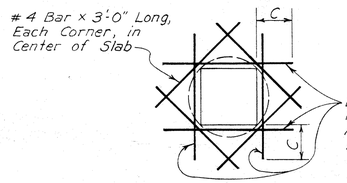

For Slabs 7" and Less In Thickness

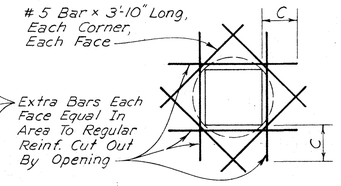

For Slab Thicker Than 7"

SLABS

Note: These details apply to openings larger than 18" in Diam. or diagonal.

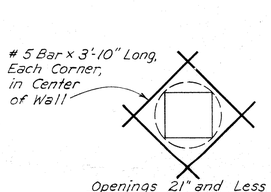

Openings 21" and Less In Diam. or Diagonal

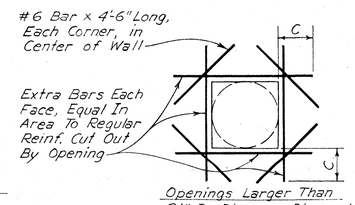

Openings Larger Than 21" In Diam. or Diagonal

WALLS

TYPICAL EXTRA REINFORCING AT OPENINGS

C = The Required Length for Lapped Splice for Top Bars as Shown on This Sheet.

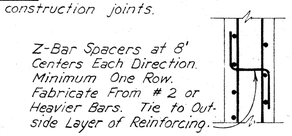

SPACERS FOR WALL REINFORCEMENT

BAR SIZE	LENGTH OF LAPPED SPLICES FOR REINFORCING IN INCHES			
	SPLICES NOT STAGGERED		WITH STAGGERED SPLICES	
	*TOP BARS	OTHERS	*TOP BARS	OTHERS
3	20	20	15	15
4	23	20	17	15
5	29	20	22	15
6	37	26	28	20
7	50	36	38	27
8	66	47	50	35
9	83	60	62	45
10	106	76	80	57
11	130	93	98	70

* Top bars are horizontal bars so placed that more than 12" of concrete is cast in the member below the bar. Horizontal bars in walls are to be provided with laps as required for top bars.

Except as otherwise indicated on the plans, lengths for lapped splices shall be not less than (no minus tolerance) shown above.

Lapped splices shall not be made at points of max. stress as determined by the Engineer, and shall not be spaced closer than 6" on ctrs. Splices are staggered if not more than 1/2 are spliced in a lap splice length.

GENERAL NOTES:

Details on this sheet apply to the entire set of plans except where specifically shown otherwise.

CONCRETE COVER FOR REINFORCEMENT

LOCATION	MINIMUM COVER
Unformed Surfaces Adjacent to Excavation	3"
Unformed Surfaces Over Seal Slab	2"
Formed or Top Surfaces Exposed to Weather or Saturated Air, Submerged or in Contact with Earth:	
# 6 or Larger Bars	2"
# 5 or Smaller Bars	1 1/2"
Other Locations:	
Bars in Beams or Girders, Including Stirrups	1 1/2"
Column Spirals or Ties	1 1/2"
Other Bars:	
# 7 or Larger	Bar Diameter
# 6 or Smaller	3/4"

Cover for reinforcing steel shall not be less than the minimum given above (no minus tolerance), and shall not exceed the minimum by more than 1/4 inch where the concrete thickness is 24 inches or less, or more than 1/2 inch where the concrete thickness is more than 24 inches.

JOB NO. 3850-1

CITY OF HOUSTON
DEPARTMENT OF PUBLIC WORKS

ALMEDA SIMS
SLUDGE DISPOSAL PLANT

TRUCK LOADING FACILITY

CONCRETE STANDARD DETAILS

RECOMMENDED FOR APPROVAL:

Kenneth R. Lindsey
BINKLEY & HOLMES, INC. CONSULTING ENGINEERS

STATE OF TEXAS — KENNETH R. LINDSEY — 61158 — REGISTERED PROFESSIONAL ENGINEER

STATE OF TEXAS — JOSEPH A. JANDA — 42911 — LICENSED PROFESSIONAL ENGINEER

APPROVED:

Vishwa Bale
WASTEWATER

PAVING

WATER

Jerry D. Linkous
CONSTRUCTION

STORM SEWER

ASST. DIRECTOR

Jimmie Schindewolf
DIRECTOR

DESIGNED BY: J.A.J. SCALE: NONE
DRAWN BY: D.R. DATE: JULY 1981
CHECKED BY: K.R.L. DRAWING NO.
SHEET SHEET NO. 18 OF 23

CITY RECORDS
MICROFILM
DATE 7-21-83

DWG. NO. 26733

PROPOSED DISTRIBUTION CENTER 4A, 480V, 3Ø, 4W

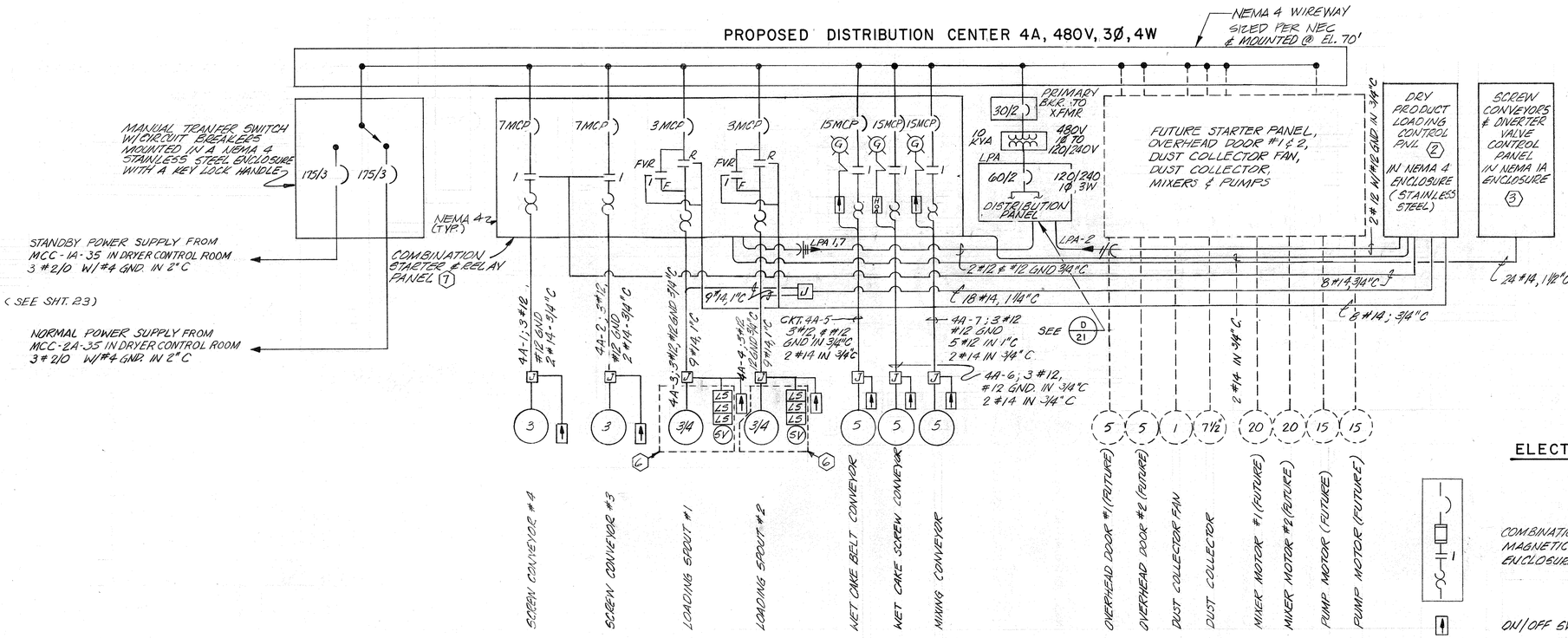

ELECTRICAL ONE LINE DIAGRAM (A 19)

NOTES

1. PROVIDE MANUAL TRANSFER SWITCH W/TWO 175 A 3P 480V 3Ø BREAKERS. PROVIDE ONE SUPPLY CIRCUIT FROM EACH MCC-1A AND MCC-2A LOCATED IN CONTROL ROOM. ONE CIRCUIT FOR NORMAL SERVICE, ONE FOR STANDBY SERVICE. CABLE LENGTH TO CONTROL ROOM APPROX. 130 FT.
2. DRY PRODUCT LOADING CONTROL PANEL TO BE MOUNTED ON THE RACK AT PROPOSED LOADING STRUCTURE AT ELEV. 54.00. SEE CONTROL SCHEM. (A 20)
3. SCREW CONVEYORS & DIVERTER VALVE CONTROL PANEL TO BE LOCATED AT EXISTING DRYER CONTROL ROOM. SEE CONTROL SCHEM (B 20)
4. UNLESS OTHERWISE NOTED, ALL EQUIPMENT AT DISTRIBUTION CENTER RACK SHALL BE ENCLOSED IN NEMA-4 ENCLOSURE. (STAINLESS STEEL)
5. DISTRIBUTION RACK TO BE LOCATED AT GROUND EL. 70.00. SEE SHT. 21 FOR EXACT LOCATION
6. TO BE PROVIDED BY EQUIPMENT MANUFACTURER
7. MOTOR STARTERS AND CONTROL RELAYS TO BE COMBINED INTO ONE (1) NEMA-4 CABINET (S.S.) FOR SCREW CONVEYOR & LOADING SPOUTS. (COMBINATION STARTER AND RELAY PANEL @ EL. 70.00)

ELECTRICAL SYMBOLS & LEGEND

- COMBINATION OF BREAKER & FULL VOLTAGE MAGNETIC SIZE 1 STARTER IN NEMA 4 ENCLOSURE
- ON/OFF SWITCH LOCKABLE
- LS — LIMIT SWITCH
- SV — SOLENOID VALVE
- MCP — MOTOR CIRCUIT PROTECTOR
- HOA — HAND OFF AUTOMATIC SWITCH
- SS — SELECTOR SWITCH
- HOME RUN TO PANEL
- CIRCUIT WITH HOT NEUTRAL & GROUND CONDUCTOR
- TR-1 — TIME DELAY RELAY
- CR-1 — CONTROL RELAY
- M — CONTACT FROM MOTOR STARTER
- CR-1 — NORMALLY OPEN DRY CONTACT FROM RESPECTIVE CONTROL RELAY
- M.O.T.O. — NORMALLY OPEN ON DELAY
- PUSH TO TEST LIGHT (COLOR AS INDICATED)
- CONDUIT TURNED DOWN
- CONDUIT TURNED UP
- LIMIT SWITCH N.O. SHOWN
- S.C. #4 — SCREW CONVEYOR #4
- D.V. #1 — DIVERTER VALVE #1
- CONDUIT UNDER WALKWAY OR SLAB
- CONDUIT EXPOSED
- PUSH TO TEST
- PUSH BUTTON CONTACTS

NOTE:
ALL CONTROL PANELS TO HAVE LOCKABLE DOORS. ALL COMPONENTS TO BE MOUNTED INSIDE ON MOUNTING PANEL & FASTENED SECURELY TO CABINET INTERIOR. CONTROL & INDICATING DEVICES TO BE ACCESSIBLE AFTER DOORS ARE OPENED.

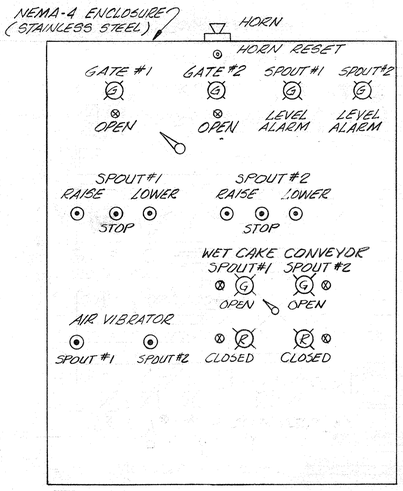

DRY PRODUCT LOADING CONTROL PANEL (B 19)
(LOCATED AT LOADING PLATFORM)
ELEV. 54'-0"

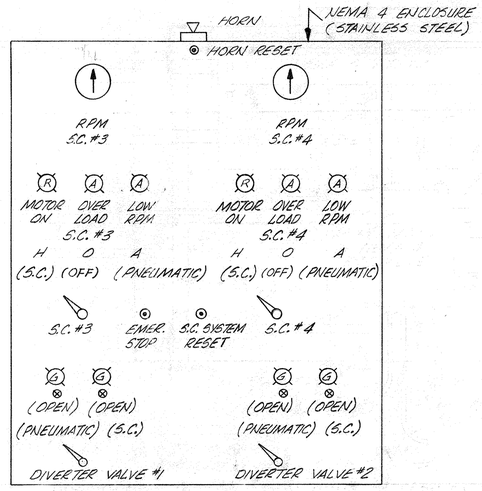

SCREW CONVEYORS & DIVERTER VALVES CONTROL PANEL (C 19)
(LOCATED IN DRYER CONTROL ROOM)

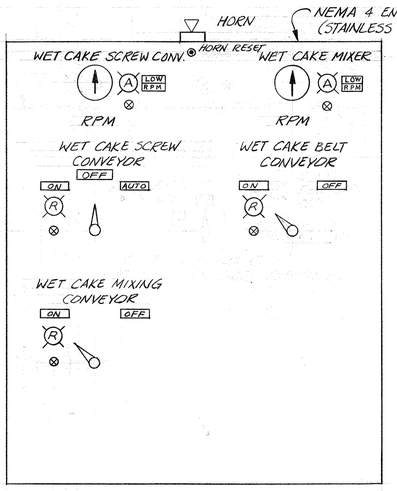

COMBINATION STARTER & RELAY PANEL (D 19)
(LOCATED AT EL. 70.00)

W. W. RECORDS MICROFILMED DATE 7-21-83

JOB NO. 3850-1

CITY OF HOUSTON
DEPARTMENT OF PUBLIC WORKS

ALMEDA SIMS
SLUDGE DISPOSAL PLANT
TRUCK LOADING FACILITY

ELECTRICAL ONE LINE DIAGRAM & MISCELLANEOUS DETAILS

RECOMMENDED FOR APPROVAL:
Kenneth R. Lindsey
BINKLEY & HOLMES, INC. CONSULTING ENGINEERS

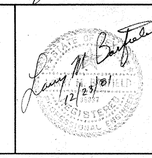

APPROVED:

Vishwa Bahl, WASTEWATER	PAVING
WATER	Jerry D. Watkins, CONSTRUCTION
STORM SEWER	
Alla C. Scott, ASST. DIRECTOR	Jimmie Schindewolf, DIRECTOR

DESIGNED BY G.R./M.D.L. SCALE: NONE
DRAWN BY M.V.S. DATE: JULY, 1981
CHECKED BY L.M.B. DRAWING NO.
SHEET SHEET NO. 19 OF 23

DWG. NO. 26733

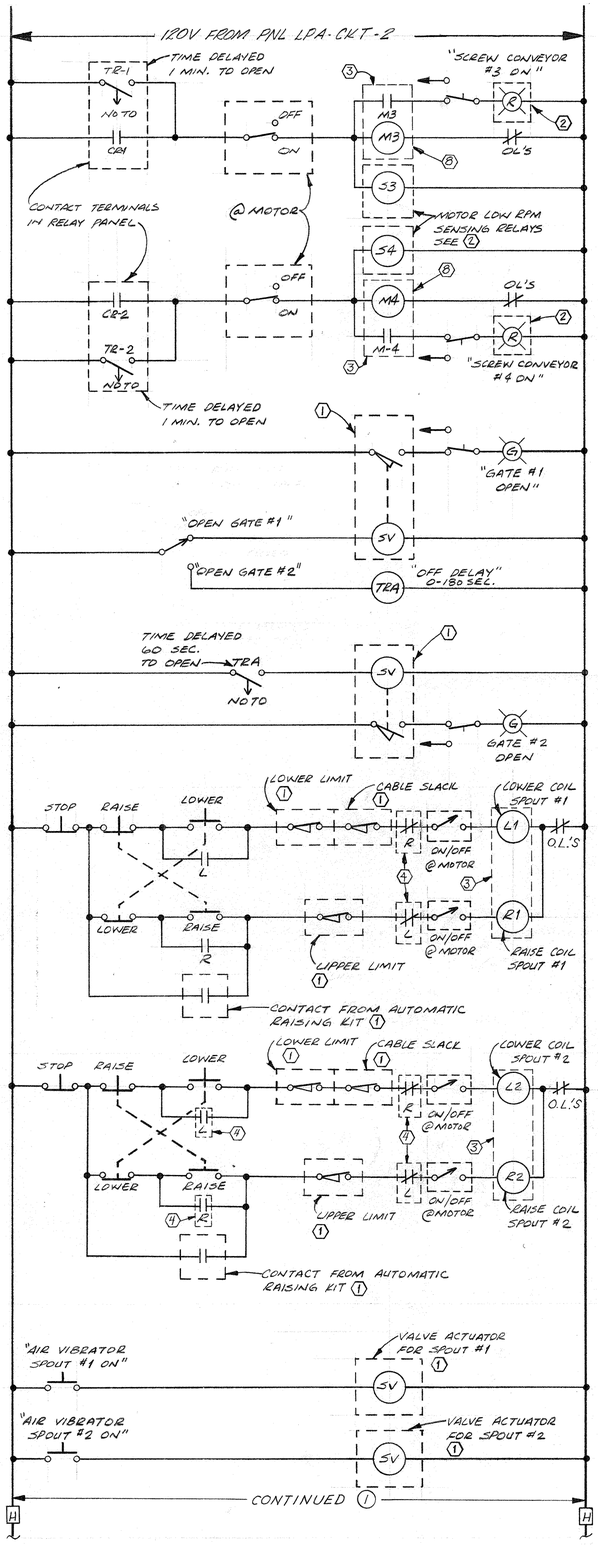

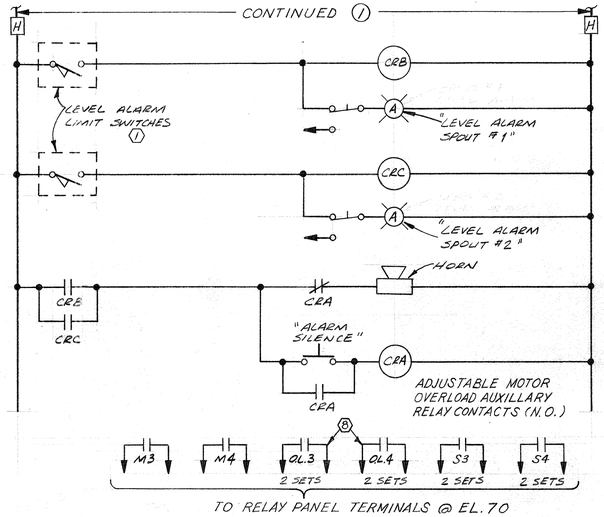

DRY PRODUCT LOADING CONTROL SCHEMATIC (A 20)

(IN NEMA-4 ENCLOSURE, @ EL. 54)

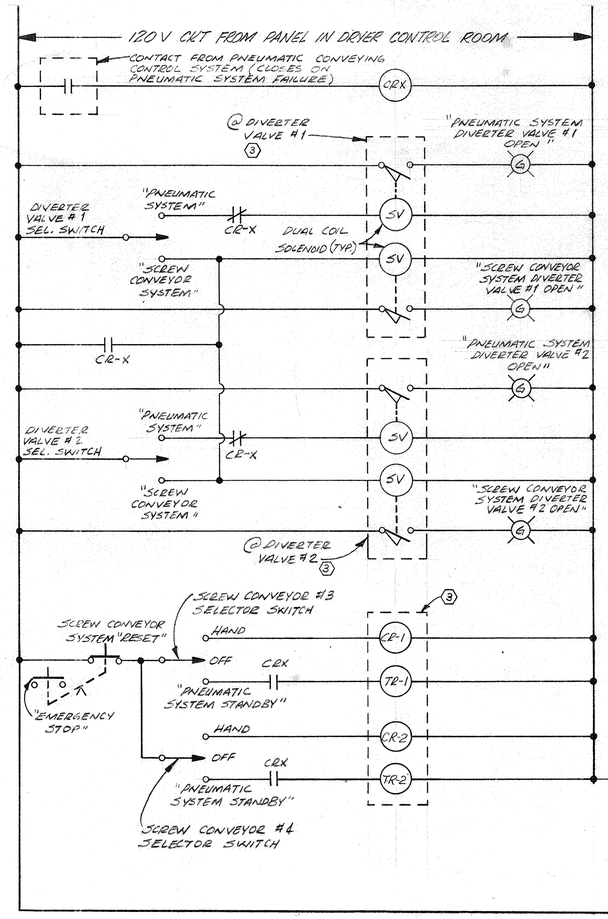

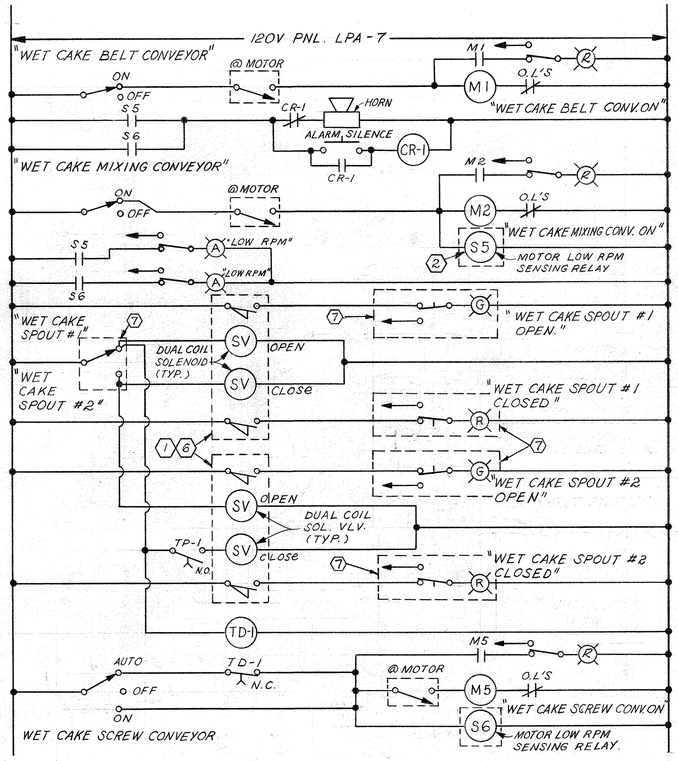

CONTROL SCHEMATIC FOR WET CAKE: SCREW CONVEYOR, BELT CONV., MIXING CONV., SPOUTS #1 & #2 (IN COMBINATION STARTER & RELAY PNL @ EL. 70) (C 20)

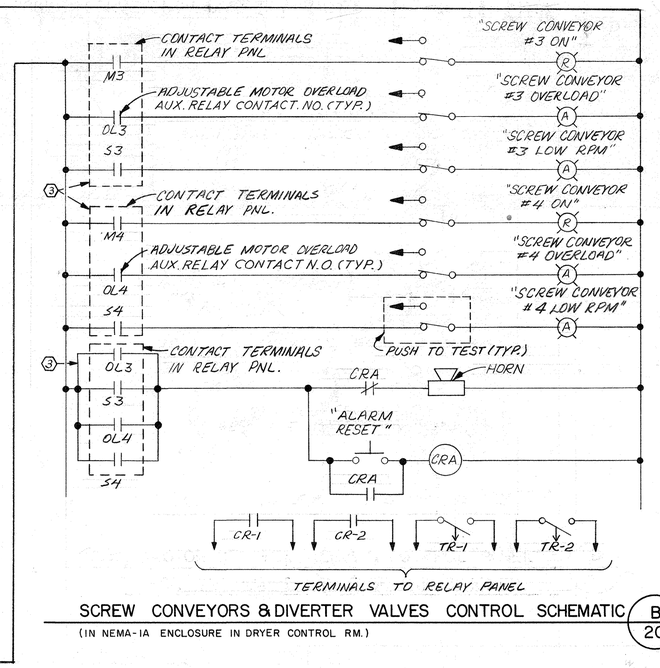

SCREW CONVEYORS & DIVERTER VALVES CONTROL SCHEMATIC (B 20)

(IN NEMA-IA ENCLOSURE IN DRYER CONTROL RM.)

NOTES

1. TO BE PROVIDED BY EQUIPMENT MANUFACTURER / SUPPLIER.
2. TO BE LOCATED IN SCREW CONVEYOR & DIVERTER VLV. CONTROL PNL.
3. LOCATED IN COMBINATION STARTER & RELAY PANEL @ EL. 70.00
4. AUXILLARY CONTACTS FROM STARTER
5. LIGHTS, SELECTOR SWITCHS ETC. ON CONTROL PANELS TO BE MOUNTED AND SPACED SUCH THAT THEY ARE EASILY VISIBLE AND ACCESSABLE. (SEE ALSO PNL. ON SINGLE LINE DIA SH. NO. 19).
6. LOCATED ON EQUIPMENT IN THE FIELD.
7. LOCATED IN DRY PRODUCT LOADING CONTROL PANEL @ EL. 54.00
8. MOTOR STARTERS M3 & M4 AS INDICATED ON THIS DWG. TO BE EQUIPED WITH AUXILLARY OVER-LOAD RELAY CONTACTS FOR USE AS INDICATED.

JOB NO. 3850-1

CITY OF HOUSTON
DEPARTMENT OF PUBLIC WORKS

ALMEDA SIMS
SLUDGE DISPOSAL PLANT
TRUCK LOADING FACILITY

ELECTRICAL CONTROL SCHEMATICS

RECOMMENDED FOR APPROVAL:

Kenneth R. Lindsey
BINKLEY & HOLMES, INC. CONSULTING ENGINEERS

APPROVED:

Vishwa Bahl — WASTEWATER
WATER
STORM SEWER
ASST. DIRECTOR

PAVING
Jerry Jenkins — CONSTRUCTION
DIRECTOR

DESIGNED BY G.R. / L.M.B. SCALE: NONE
DRAWN BY L.I. DATE: JULY, 1981
CHECKED BY L.M.B. DRAWING NO.
SHEET SHEET NO. 20 OF 23

H. W. RECORDS MICROFILM DATE 7-21-83

DWG. NO. 26733

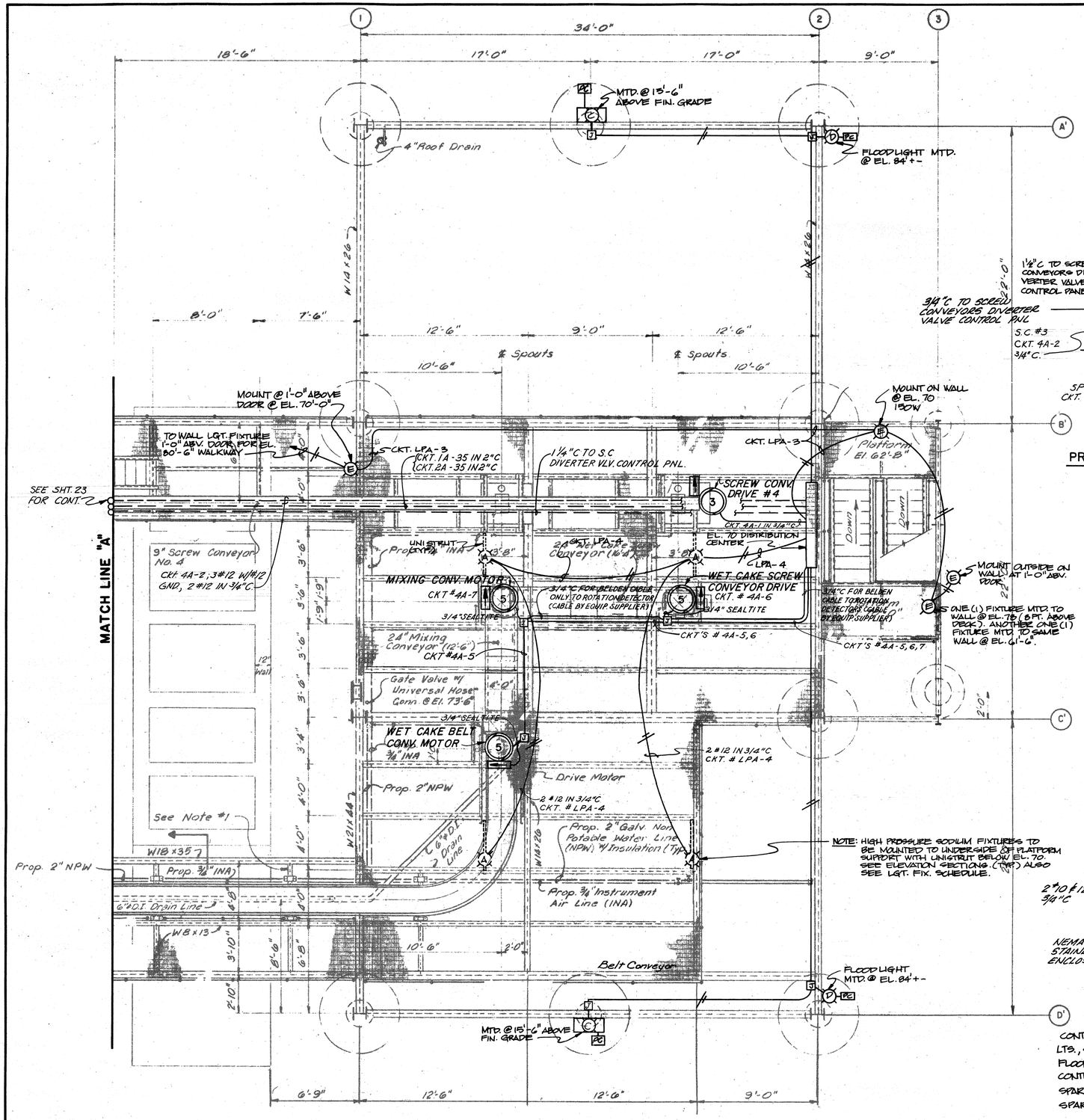

WORKING PLATFOM FRAMING PLAN AT ELEVATION 70'-0" (TOP OF STEEL ELEV. 69'-10")

A / 21

SCALE: 1/4" = 1'-0"

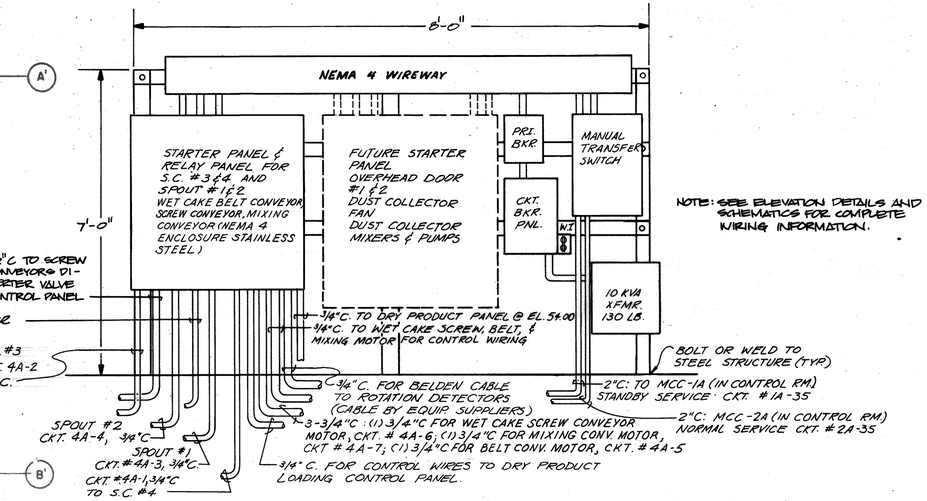

NOTE: SEE ELEVATION DETAILS AND SCHEMATICS FOR COMPLETE WIRING INFORMATION.

PROPOSED DISTRIBUTION CENTER RACK-4A ELEVATION DETAIL

B / 21

LIGHTING FIXTURE SCHEDULE

TYPE	MANUFACTURER AND MODEL / CAT. NUMBER	LAMP	VOLT	DESCRIPTION
A	HUBBEL #VLB-02506-1Q1 OR APPROVED EQUAL	LU 250/S	120	H.P.S. ENCLOSED REFRACTOR UNIT 250 W. 120 V. BALLAST
B	HUBBEL #VLB-01506-1Q1 OR APPROVED EQUAL	LU 150/SS	120	H.P.S. ENCLOSED REFRACTOR UNIT 150 W. USES A 55 VOLT LAMP 120 V. BALLAST
C	HUBBEL #PVL-01505-III-PBT-1-PVC-BK OR APPROVED EQUAL	LU 150/SS	120	H.P.S. FIXTURE FOR MOUNTING ABOVE DOOR FOR TRUCK ENTRANCE & EXIT 150 W. W/ PHOTOCELL
D	HUBBEL #9805-120HS-F-C, WIDELITE #FS-400-C-120-FI-P OR APPROVED EQUAL	LU 400	120	H.P.S. FLOODLIGHT WITH 400 W 120 V. PHOTOCELL CONTROL. 120 V. BALLAST
E	HUBBEL #WB-152 W/GUARD OR APPROVED EQUAL	150A23 120 V.	120	ENCLOSED & GASKETED INCANDESCENT FIXTURE FOR WALL MOUNTING FOR CORRIDOR & STAIRWELL LGT. 150 W. BULB

LIGHTING FIXTURE SCHEDULE

C / 21

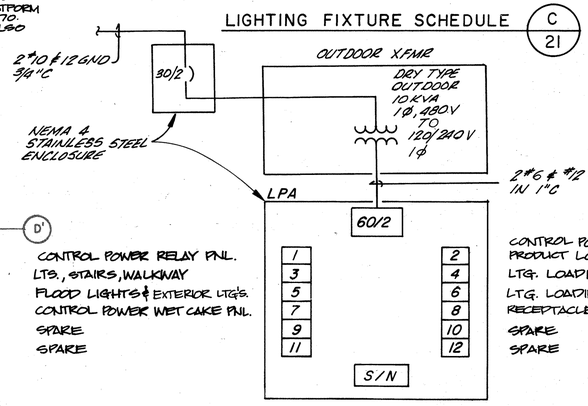

TRANSFORMER & DISTRIBUTION PNL

D / 21

ALL BREAKERS 20/1 UNLESS OTHERWISE SHOWN

RECORDS MICROFILM DATE 7-21-83

JOB NO. 3850-1

CITY OF HOUSTON
DEPARTMENT OF PUBLIC WORKS

ALMEDA SIMS SLUDGE DISPOSAL PLANT
TRUCK LOADING FACILITY

LIGHTING LAYOUT & DISTRIBUTION CENTER PLAN ELEV. 70'-0"

RECOMMENDED FOR APPROVAL:
Kenneth W. Lindsey
BINKLEY & HOLMES, INC. CONSULTING ENGINEERS

APPROVED:

Vishwa Bahl — WASTEWATER	PAVING
WATER	James W. Jenkins — CONSTRUCTION
STORM SEWER	
Alvin C. Sieg — ASST. DIRECTOR	Jimmie Schindewolf — DIRECTOR

DESIGNED BY: M.D.L. SCALE: AS SHOWN
DRAWN BY: D.R. DATE: JULY 1981
CHECKED BY: L.M.B. DRAWING NO.
SHEET SHEET NO. 21 OF 23

DWG. NO. 26733

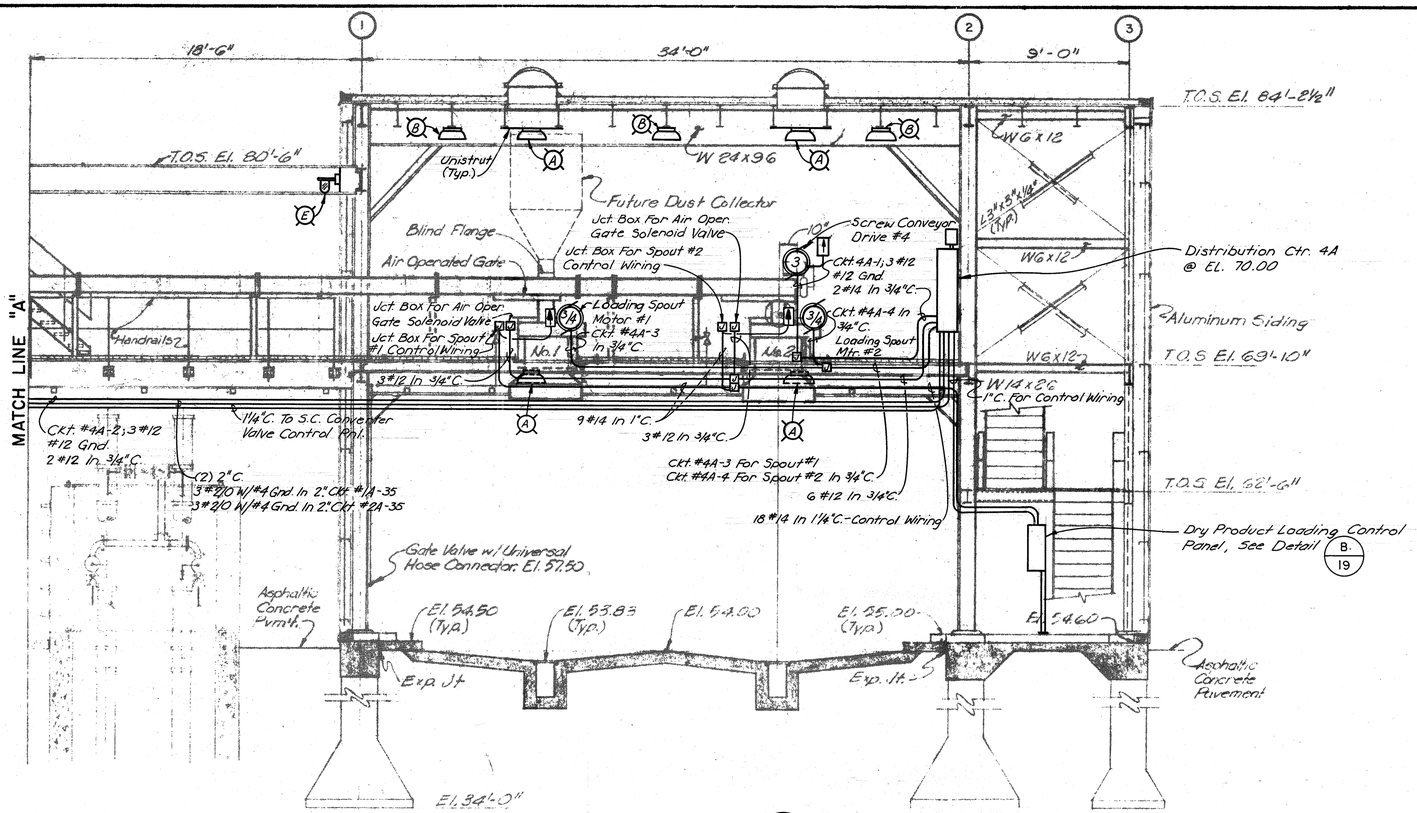

DISTRICTION AND CONTROL @ EL. 70.00 (A / 22)

SCALE: 1/4" = 1'-0"

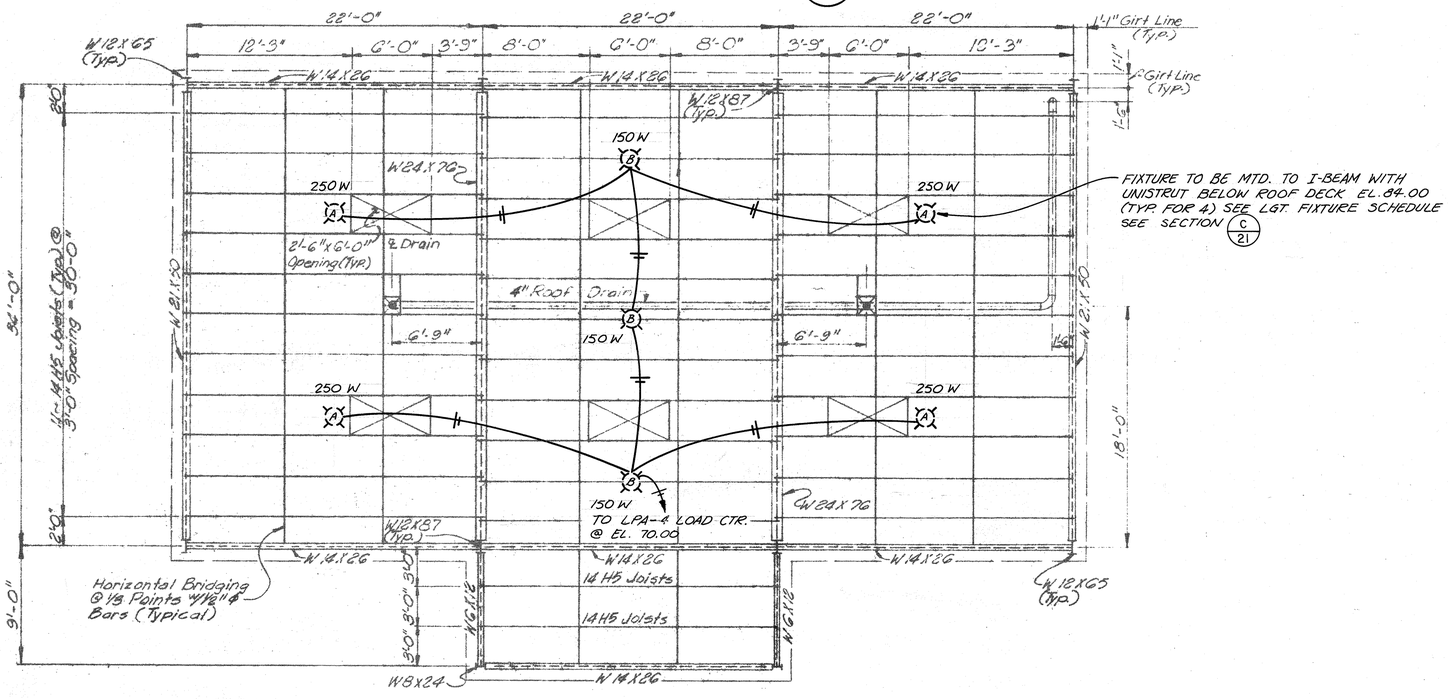

LIGHTING PLAN BELOW ROOF DECK @ EL. 84.00 (B / 22)

SCALE: 3/16" = 1'-0"

JOB NO. 3850-1

CITY OF HOUSTON
DEPARTMENT OF PUBLIC WORKS

ALMEDA SIMS SLUDGE DISPOSAL PLANT
TRUCK LOADING FACILITY

LIGHTING LAYOUT
PLAN ELEV. 84'-00"

RECOMMENDED FOR APPROVAL:
Kenneth R. Lindsey
BINKLEY & HOLMES, INC. CONSULTING ENGINEERS

KENNETH R. LINDSEY 31158 REGISTERED PROFESSIONAL ENGINEER

STATE OF TEXAS LARRY W. BARFIELD 14477 REGISTERED PROFESSIONAL ENGINEER

APPROVED:

Victoria Ball	
WASTEWATER	PAVING
WATER	CONSTRUCTION
STORM SEWER	
ASST. DIRECTOR	DIRECTOR

W. W. RECORDS MICROFILM DATE 7-21-83

DESIGNED BY: M.D.L. SCALE: AS SHOWN
DRAWN BY: D.R. DATE: JULY, 1981
CHECKED BY: L.M.B. DRAWING NO.
SHEET SHEET NO. 22 OF 23

DWG. NO. 26733

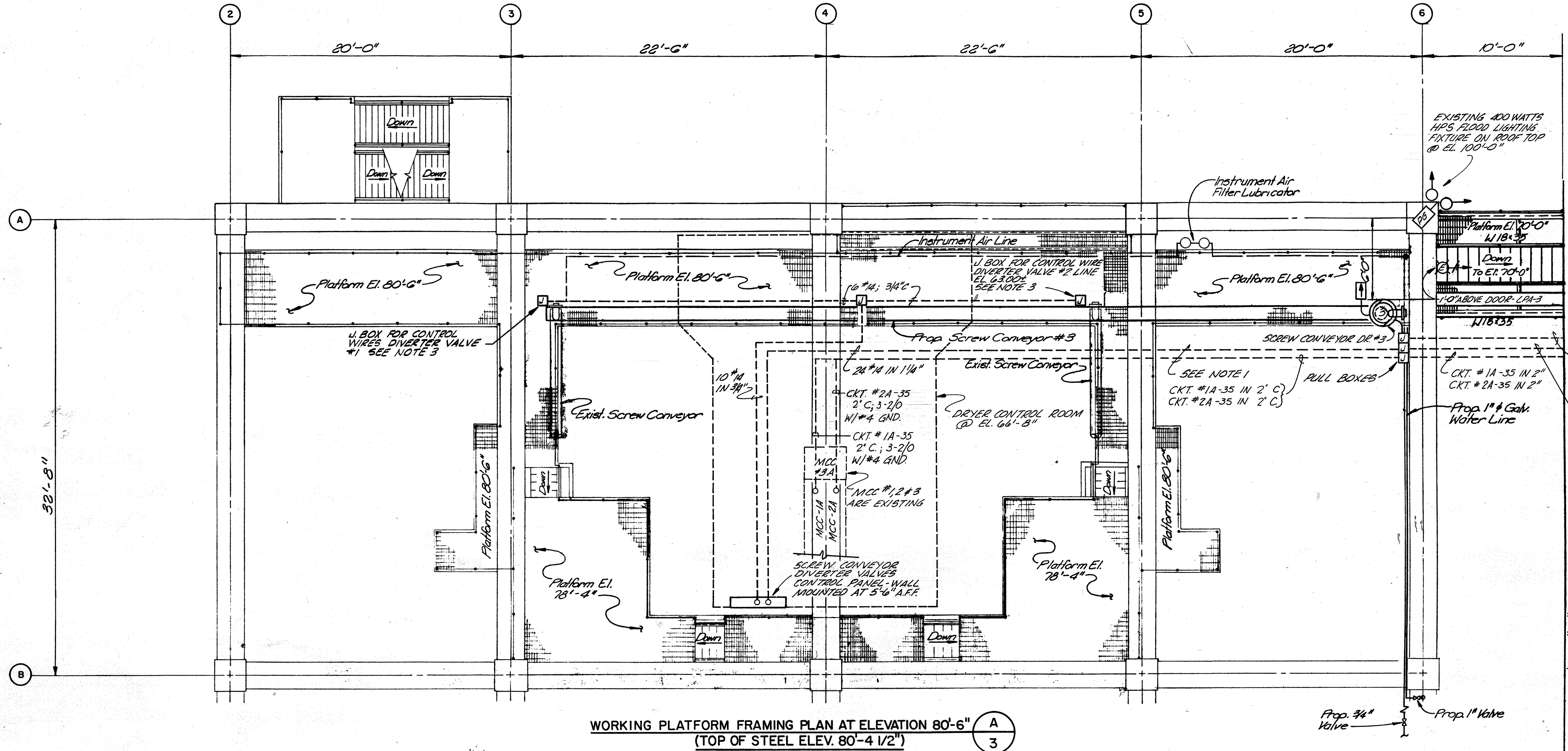

WORKING PLATFORM FRAMING PLAN AT ELEVATION 80'-6" (A/3)
(TOP OF STEEL ELEV. 80'-4 1/2")

ELECTRICAL NOTES

1. ALL CONDUITS TO BE RUN EXPOSED BELOW WALKWAY. PROVIDE CONDUIT SUPPORTS; 12GA. UNISTRUT OR EQUAL WITH 5/8 Ø GALV. ROD (TYP)
2. ALL J-BOX, PULL BOXES TO BE SIZED PER CURRENT N.E.C.
3. EXACT LOCATIONS OF J-BOXES FOR CONTROL WIRES FOR DIVERTER VALVES #1 & 2 AND LOADING SPOUTS #1 & 2, SHALL BE COORINATED IN THE FIELD WITH EQUIP. SUPPLIER.
4. SEE ELECTRICAL ONE LINE DIAG. (A/19)
5. PROVIDE 175 AMP CIRCUIT BREAKER IN EACH OF M.C.C.'s #1A & 2A TO PROVIDE NORMAL & STANDBY POWER TO DISTRIBUTION RACK 4A TRUCK LOADING FACILITY EL. 70.00 CIRCUIT FROM MCC-1A TO BE "STANDBY" SERVICE. CIRCUIT FROM MCC-2A TO BE "NORMAL" SERVICE. CIRCUIT BREAKER - G.E. TYPE #TFK 70-225A 22,000 A.I.C. @ 480 VAC 3Ø

NOTE: EXIST MCC-1A IS LOCATED IN DRYER CONTROL ROOM

(EXIST) MCC-1A (GENERAL ELECTRIC)

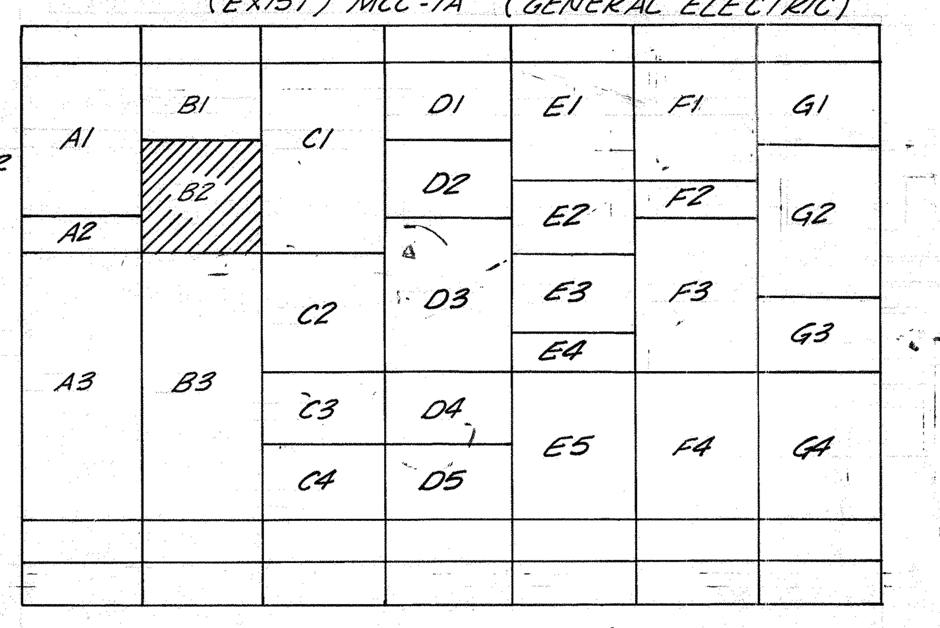

NOTE: SECTION B2 IN MCC-1A TO BE USED FOR 175A CIRCUIT BREAKER FOR "STANDBY" POWER SUPPLY TO DISTRIBUTION CTR. 4A EL. 70.00 TRUCK LOADING FACILITY (SEE SHT. 22) (SEE NOTE 5)

NOTE: EXIST MCC-2A IS LOCATED IN DRYER CONTROL ROOM.

(EXIST) MCC-2A (GENERAL ELECTRIC)

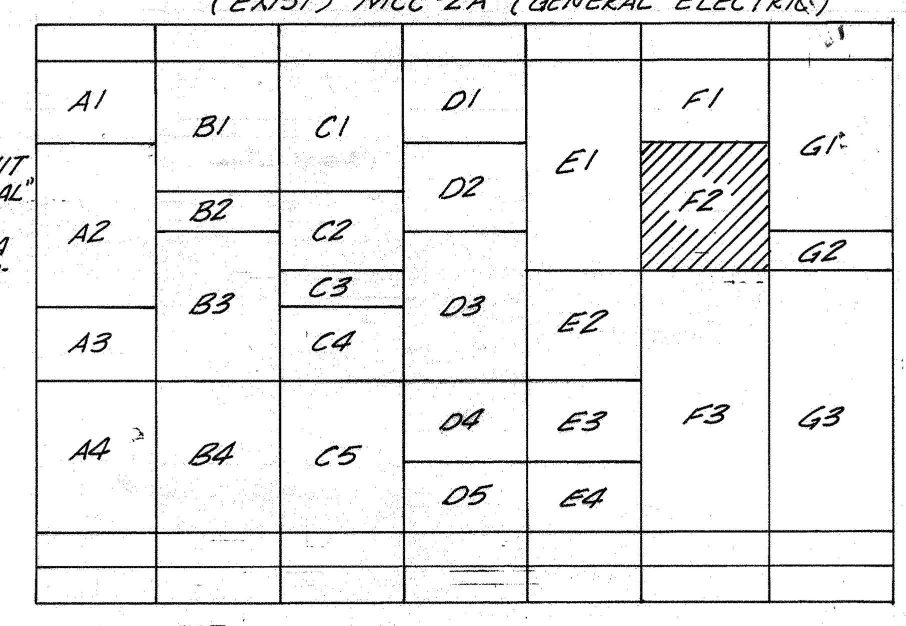

NOTE: SECTION F2 IN MCC-2A TO BE USED FOR 175A CIRCUIT BREAKER FOR "NORMAL" POWER SUPPLY TO DISTRIBUTION CTR. 4A EL. 70.00 TRUCK LOADING FACILITY (SEE SHT. 22) (SEE NOTE 5)

JOB NO. 3850-1

CITY OF HOUSTON
DEPARTMENT OF PUBLIC WORKS

ALMEDA SIMS
SLUDGE DISPOSAL PLANT
TRUCK LOADING FACILITY

ELECTRICAL LAYOUT FROM DRYER CONTROL ROOM TO TRUCK LOADING FACILITY

RECOMMENDED FOR APPROVAL:
Kenneth R. Lindsey
BINKLEY & HOLMES, INC. CONSULTING ENGINEERS

APPROVED:
Vishwa Bahl — WASTEWATER
PAVING CONSTRUCTION
WATER
STORM SEWER
ASST. DIRECTOR
DIRECTOR

DESIGNED BY: M.D.L.	SCALE: 1/4" = 1'-0"
DRAWN BY: D.R.	DATE: JULY 1981
CHECKED BY: L.M.B.	DRAWING NO.
SHEET	SHEET NO. 23 OF 23

W. W. RECORDS MICROFILM DATE 7-21-83

DWG. NO. 26733

CITY OF HOUSTON
DEPARTMENT OF PUBLIC WORKS

ALMEDA-SIMS SLUDGE DISPOSAL PLANT

LIME STORAGE AND FEEDING FACILITY

1984

WASTEWATER DIVISION JOB NO. 3850-2

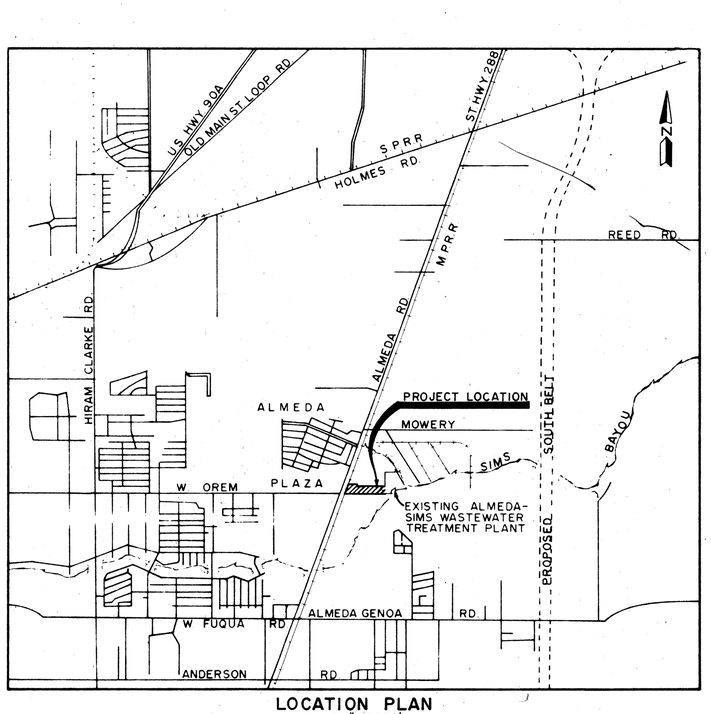

LOCATION PLAN
SCALE: 1" = 3000'

INDEX TO DRAWINGS

DESCRIPTION	SHEET NO.
COVER SHEET AND PROJECT LOCATION MAP	1
SITE PLAN	2
GROUND FLOOR PLAN AT ELEVATION 54'-0"	3
WORKING PLATFORM PLAN AT ELEVATION 69'-10" AND DETAILS	4
MECHANICAL/STRUCTURAL SECTIONS AND DETAILS	5
AIR BLOWER FACILITIES PLAN, SECTIONS AND DETAILS	6
MISCELLANEOUS SECTIONS AND DETAILS	7
ELECTRICAL ONE LINE DIAGRAM, CONTROL SCHEMATICS AND DETAILS	8
FILTER/DRYER ROOM AREA ELECTRICAL PLAN AND MCC ELEVATIONS	9
BLOWER AND PUMPING FACILITIES ELECTRICAL PLAN AND DETAILS	10

BINKLEY & HOLMES, INC.
Consulting Engineers
Houston, Texas

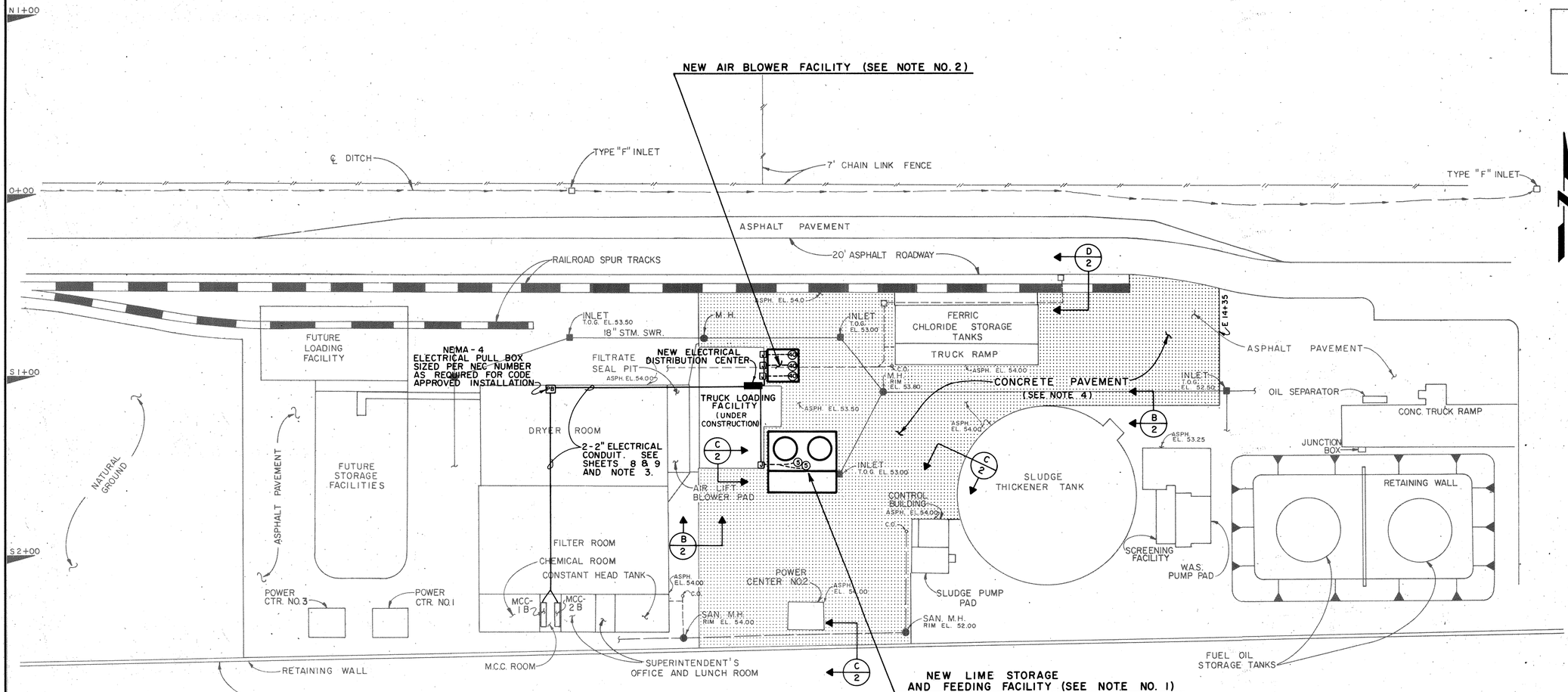

CITY BENCH MARK 5351 0116
ELEVATION: 54.67
Monument located approximately 80' East of the intersect of Almeda Road and W. Orem Drive.

GENERAL NOTES:

1. FOR EXACT LOCATION AND CONSTRUCTION DETAILS OF NEW WORK, SEE SHEET NOS. 3, 4 AND 5.
2. FOR EXACT LOCATION AND CONSTRUCTION DETAILS, SEE SHEET NOS. 3 AND 6.
3. ELECTRICAL CONDUIT FROM MCC ROOM TO TRUCK LOADING FACILITY TO BE FIELD ROUTED AS REQUIRED AND INSTALLED IN COMPLIANCE WITH THE N.E.C. CONTRACTOR SHALL BE RESPONSIBLE FOR INSTALLING IN WORKMANLIKE MANNER SO AS NOT TO CONFLICT WITH EXISTING MECHANICAL AND ELECTRICAL SYSTEMS.
4. CONTRACTOR SHALL REMOVE EXISTING PAVEMENT AND RE-STABILIZE SUBGRADE. NEW PAVEMENT TO MATCH EXISTING GRADES. CONTRACTOR TO FIELD VERIFY ELEVATIONS OF EXISTING MANHOLES AND INLETS.

SITE PLAN (A/2)
SCALE: 1" = 30'

* SEMI RIGID BASE (One of the following):
#1 6" Cem. Stab. Shell Base Course or
#2 6" Lime Stab. Crushed Limestone Base Course or
#3 6" Hot-Mix Asph. Conc. Base Course or
#4 6" Lime Stab. Pit-Run Gravel Base Course.

LEGEND
- EXISTING
- NEW
- NEW CONCRETE PAVEMENT

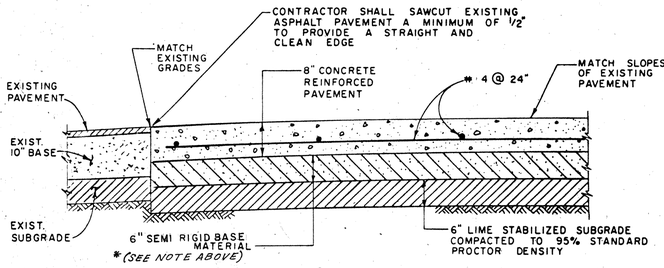

TYPICAL CONCRETE PAVEMENT SECTION (B/2)
SCALE: NONE

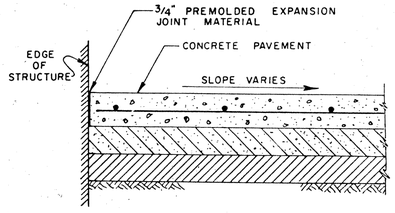

TYPICAL CONCRETE PAVEMENT ADJACENT TO STRUCTURES (C/2)
SCALE: NONE

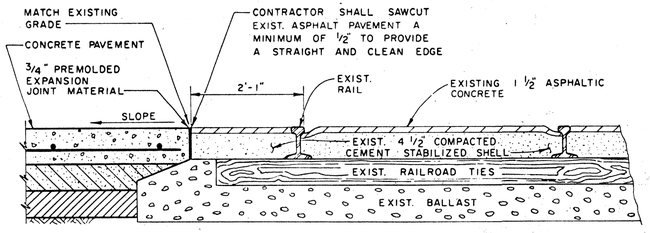

TYPICAL CONCRETE PAVEMENT ADJACENT TO EXISTING RAILROAD TRACK (D/2)
SCALE: NONE
NOTE: SEE "TYPICAL CONCRETE PAVEMENT SECTION" FOR DETAILS OF PAVEMENT, BASE AND SUBGRADE.

Revised: 3-7-84 Added Note for Semi-Rigid Base on "Typical Conc. Pavement Section B/2 8X.P. per D.C.

JOB NO. 3850-2

CITY OF HOUSTON
DEPARTMENT OF PUBLIC WORKS

ALMEDA SIMS
SLUDGE DISPOSAL PLANT
LIME STORAGE AND FEEDING FACILITY

SITE PLAN

RECOMMENDED FOR APPROVAL:
BINKLEY & HOLMES, INC. CONSULTING ENGINEERS

STATE OF TEXAS — KENNETH R. LINDSEY — 31158 — REGISTERED PROFESSIONAL ENGINEER
STATE OF TEXAS — DOMENIC DI CENSO — 55093 — REGISTERED PROFESSIONAL ENGINEER

APPROVED:
WASTEWATER 5/14/83
PAVING
WATER
CONSTRUCTION
STORM SEWER
ASST. DIRECTOR
DIRECTOR

DESIGNED BY: D.D.C. SCALE: AS SHOWN
DRAWN BY: F.G. DATE: AUG. 1982
CHECKED BY: K.R.L. DRAWING NO.
SHEET SHEET NO. 2 OF 10

DWG. NO. 27313

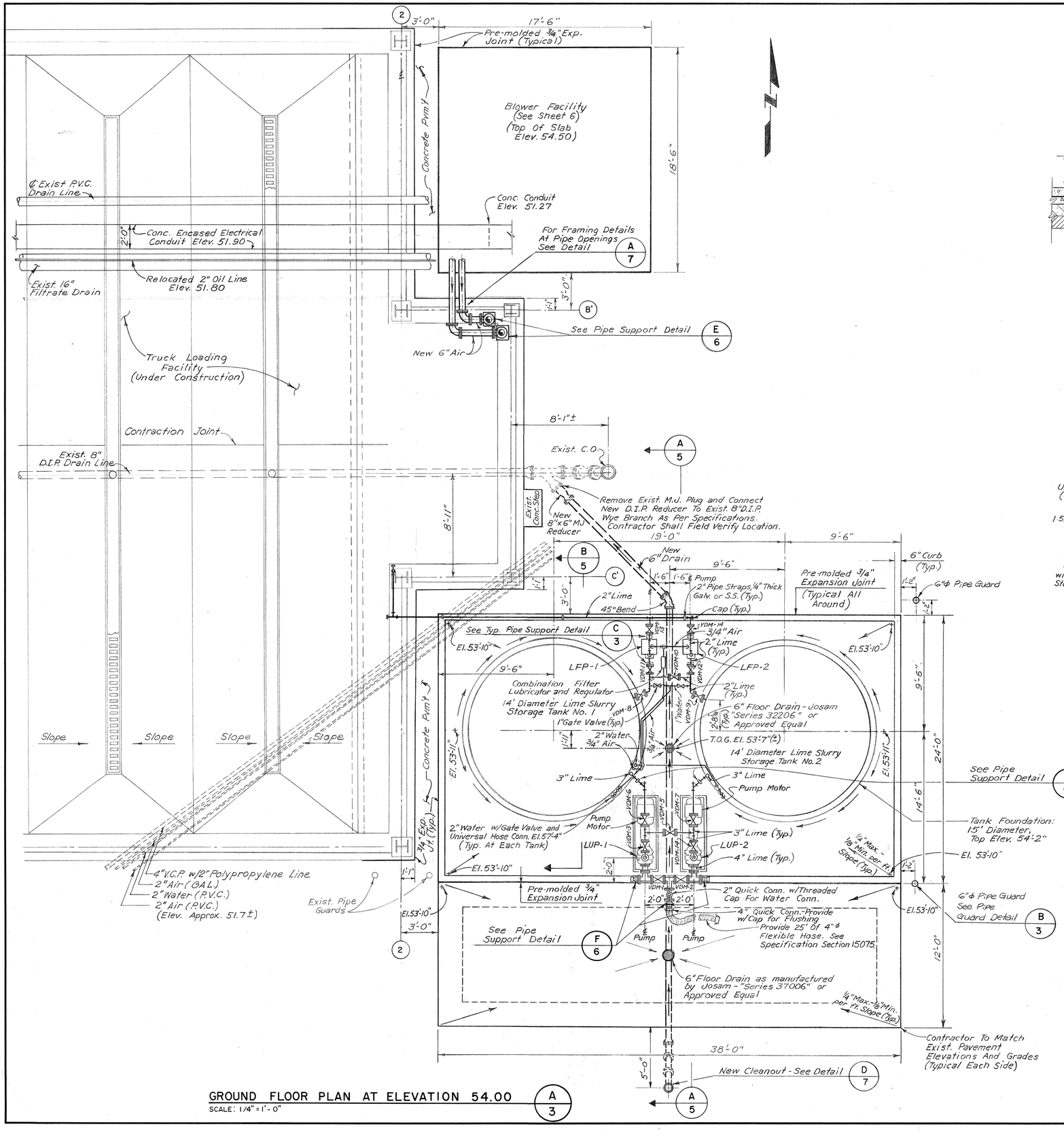

GROUND FLOOR PLAN AT ELEVATION 54.00 — A 3

SCALE: 1/4" = 1'-0"

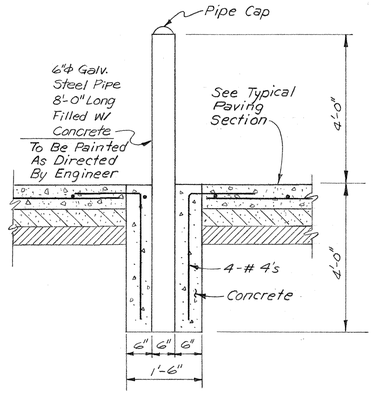

PIPE GUARD DETAIL — B 3

SCALE: NONE

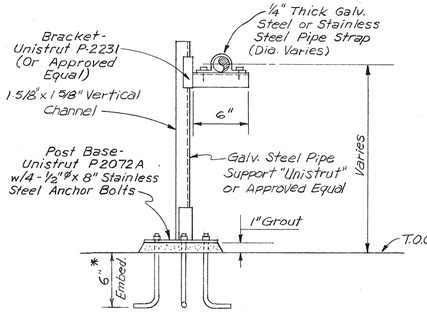

PIPE SUPPORT DETAIL — C 3

SCALE: NONE

*NOTE: Anchor bolt embedment shall be 4" in slabs less than 8" thick.

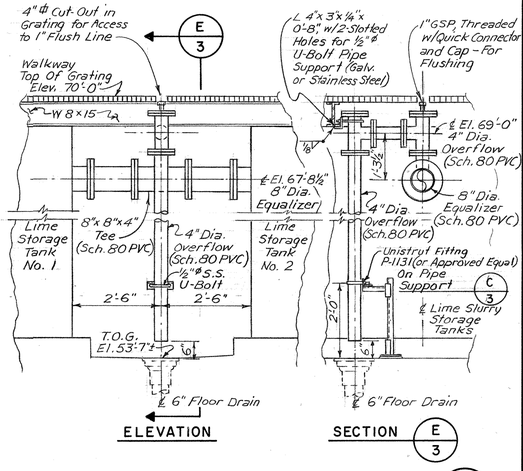

DETAIL - EQUALIZER AND OVERFLOW — D 3

SCALE: 1/2" = 1'-0"

GENERAL NOTES:

1. Water lines shall be galvanized steel pipe as per Specification Section 15060.
2. Instrument Air Piping shall be galv. steel as per Specification Section 15060.
3. Sanitary Sewer piping shall be dutile iron and shall be as per Specification Section 15062.
4. Lime Slurry piping shall be Schedule 40 Galv. Steel Pipe as per Specification Section 15060.
5. Lime slurry, air and water piping is shown in the approximate location. Contractor shall field locate all piping for compatability in relation to final placement of lime slurry unloading / feeding equipmet and piping.
6. All 8" and 4" piping for Equalizer and Overflow shall be Schedule 80 PVC as per Specification Section 15064.

LEGEND

LFP	Lime Feed Pump
LUP	Lime Unloading Pump
VDM	Diaphragm Valve

JOB NO. 3850-2

CITY OF HOUSTON
DEPARTMENT OF PUBLIC WORKS

ALMEDA SIMS SLUDGE DISPOSAL PLANT

LIME STORAGE AND FEEDING FACILITY

GROUND FLOOR PLAN AT ELEVATION 54'-0"

RECOMMENDED FOR APPROVAL:

BINKLEY & HOLMES, INC., CONSULTING ENGINEERS

STATE OF TEXAS — KENNETH R. LINDSEY — 31158 — REGISTERED ENGINEER

STATE OF TEXAS — DOMENIC DUENAS — 80193 — REGISTERED ENGINEER

APPROVED:

WASTEWATER	PAVING
WATER	CONSTRUCTION
STORM SEWER	
ASST. DIRECTOR	DIRECTOR

DESIGNED BY: D D C	SCALE: AS SHOWN
DRAWN BY: G.A.S.	DATE: AUG. 1982
CHECKED BY: K.R.L.	DRAWING NO.
SHEET	SHEET NO. 3 OF 10

DWG. NO. 27313

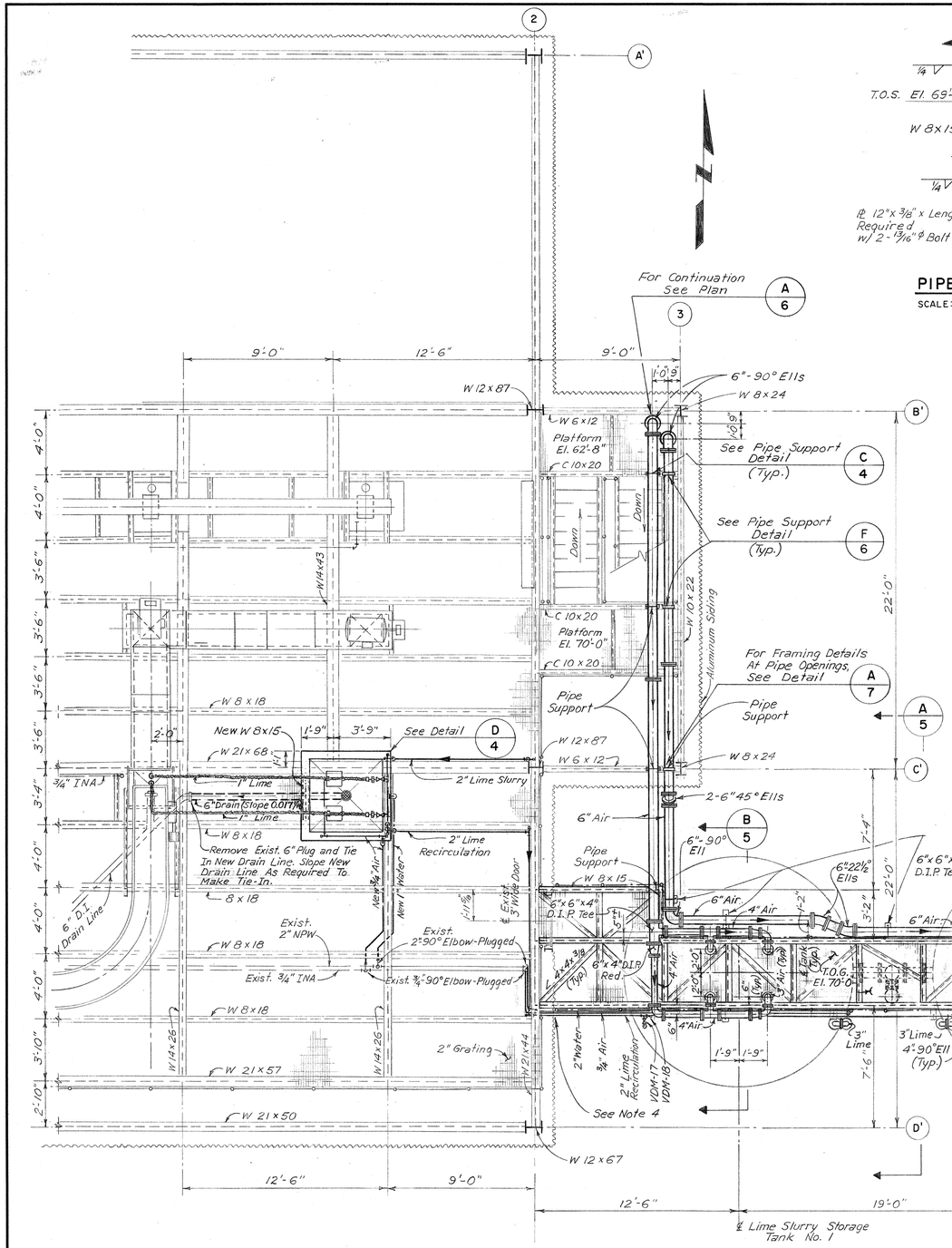

WORKING PLATFORM PLAN (TOP OF STEEL ELEV. 69'-10") — A/4

SCALE: 1/4" = 1'-0"

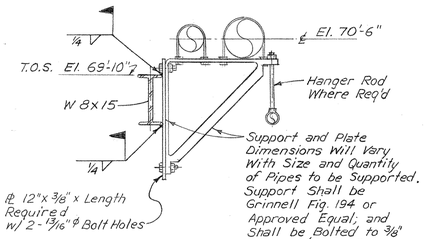

PIPE SUPPORT DETAIL — B/4

SCALE: NONE

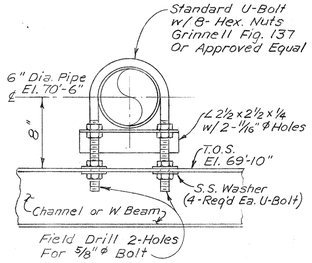

PIPE SUPPORT DETAIL — C/4

SCALE: NONE

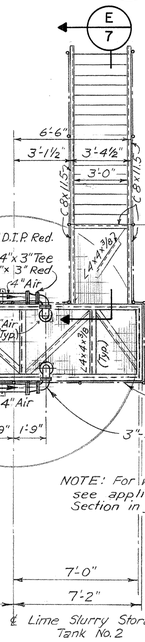

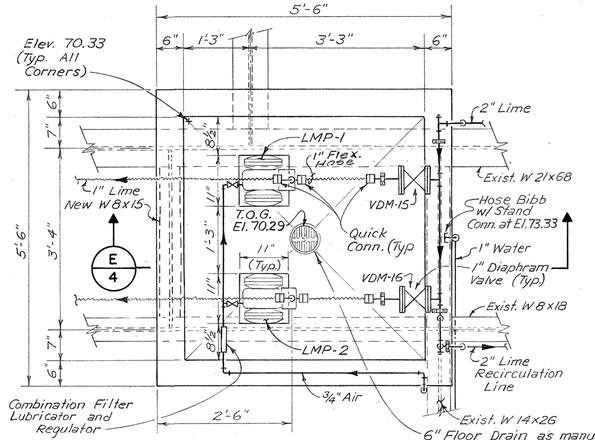

PLAN

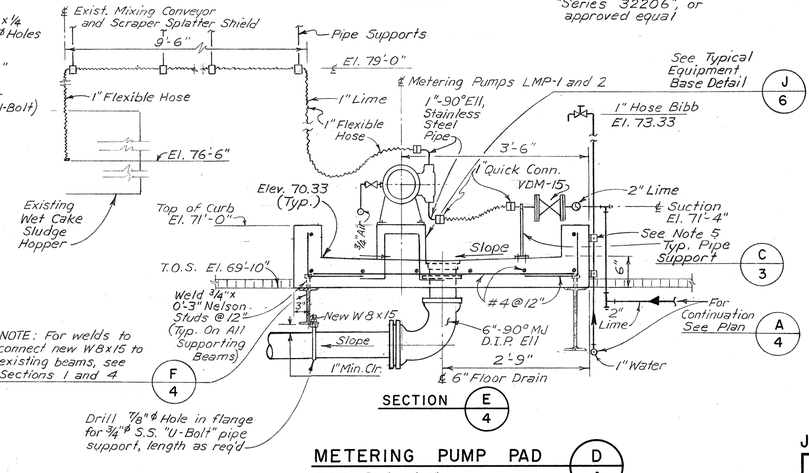

SECTION — E/4

METERING PUMP PAD — D/4

SCALE: 3/4" = 1'-0"

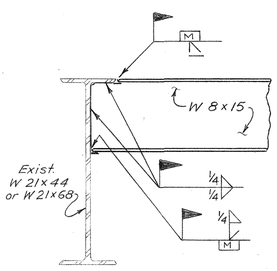

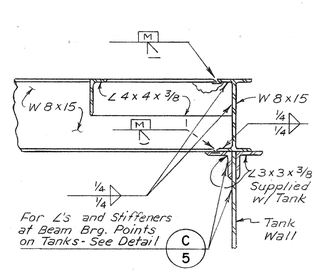

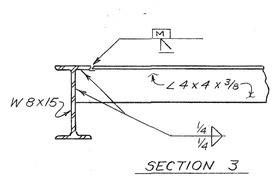

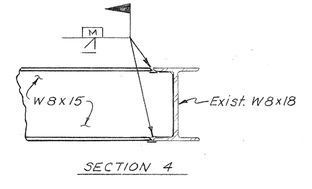

WELD DETAILS — F/4

SCALE: 1 1/2" = 1'-0"

GENERAL NOTES:

1. All 6" diameter air piping shall be ductile iron pipe as per Specification Section 15062.

2. All 4" and 3" diameter air piping shall be Schedule 40 Flanged, Galv. Steel Pipe as per Specification Section 15060.

3. All lime slurry piping shall be Schedule 40 Galv. Steel Pipe as per Specification Section 15060.

4. Provide weather tight enclosure for wide flange penetrations through side walls.

5. Provide 2-Straps at 8" Ctrs. (Grinnell 262 or approved equal) to support 1" Water Line at Hose Bibb at outside of curb on Metering Pump Pad.

LEGEND

LMP Lime Metering Pump
VDM Diaphragm Valve

JOB NO. 3850-2

CITY OF HOUSTON
DEPARTMENT OF PUBLIC WORKS

ALMEDA SIMS
SLUDGE DISPOSAL PLANT
LIME STORAGE AND FEEDING FACILITY

WORKING PLATFORM PLAN AT ELEVATION 69'-10" AND DETAILS

RECOMMENDED FOR APPROVAL:

Kenneth R. Lindsey
BINKLEY & HOLMES, INC. CONSULTING ENGINEERS

STATE OF TEXAS — KENNETH R. LINDSEY — 31158 — REGISTERED PROFESSIONAL ENGINEER

STATE OF TEXAS — DONALD DEGOLYER — 53093 — LICENSED PROFESSIONAL ENGINEER

APPROVED:

Victor Rabb (WASTEWATER)	(PAVING)
(WATER)	Jerry Dunham (CONSTRUCTION)
(STORM SEWER)	
Asst. Director	Director

DESIGNED BY: D D C — SCALE: AS SHOWN
DRAWN BY: G.A.S. — DATE: AUG. 1982
CHECKED BY: K.R.L. — DRAWING NO.
SHEET — SHEET NO. 4 OF 10

DWG. NO. 27313

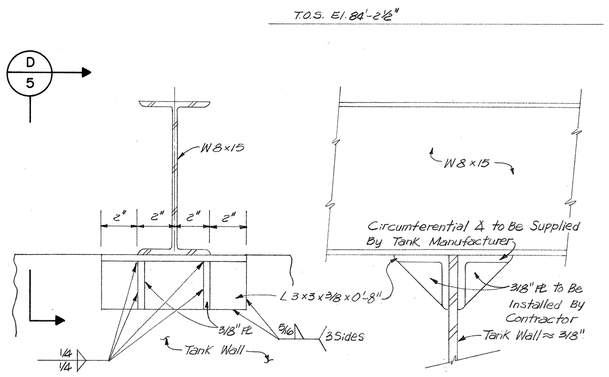

ELEVATION

SECTION D/5

DETAIL C/5
SCALE: 3" = 1'-0"

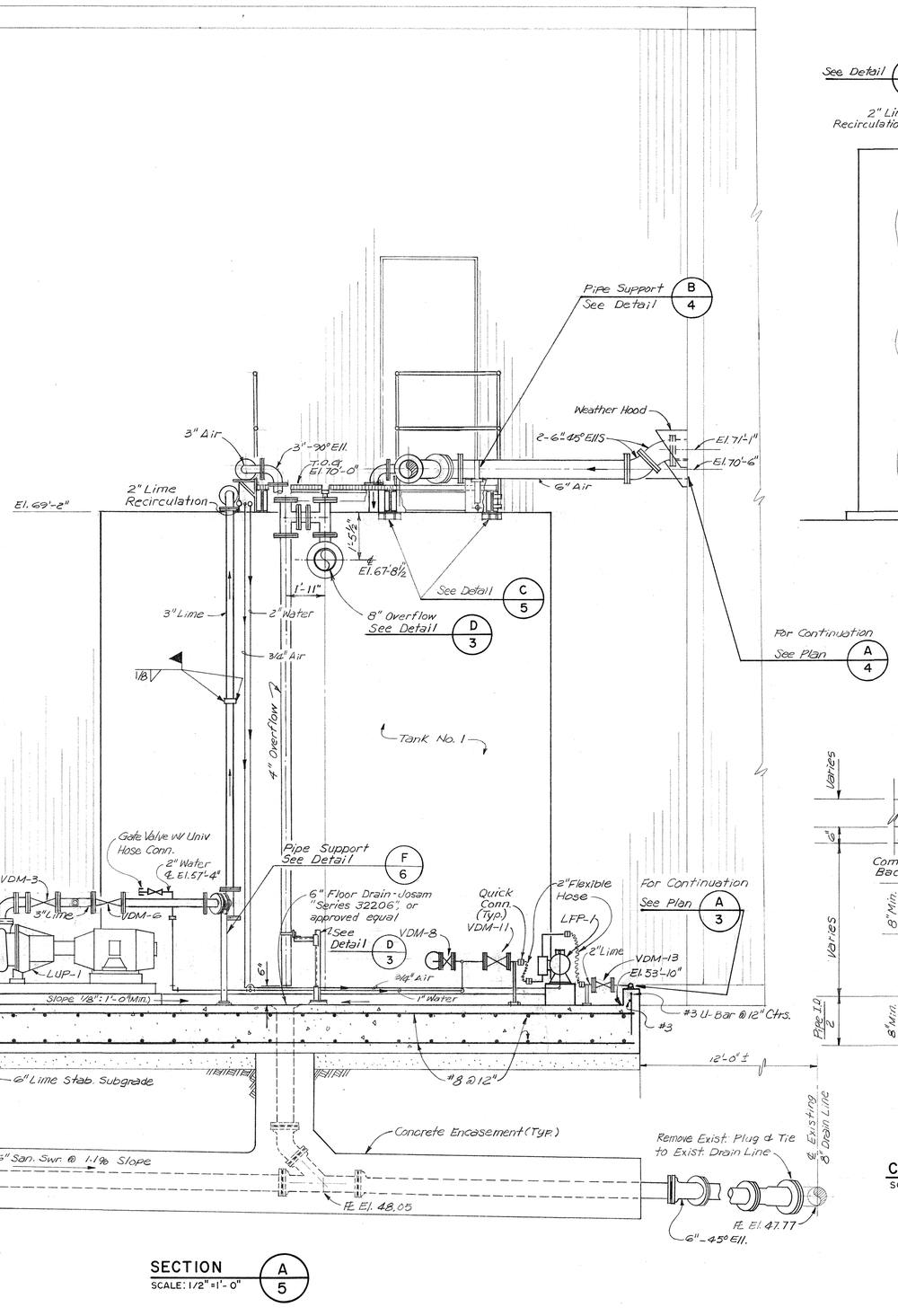

SECTION A/5
SCALE: 1/2" = 1'-0"

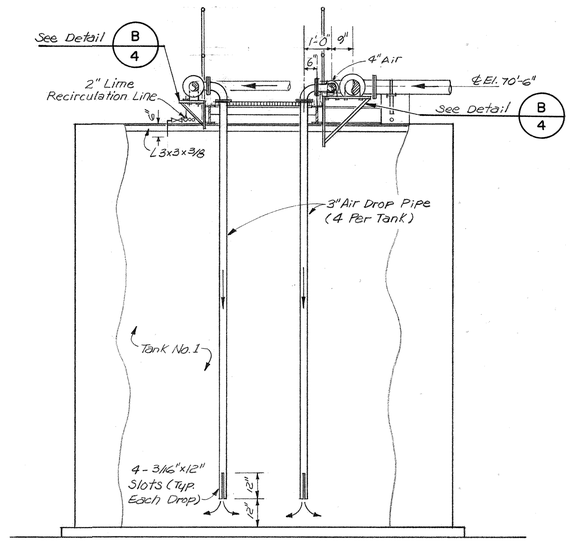

SECTION B/5
SCALE: 3/8" = 1'-0"

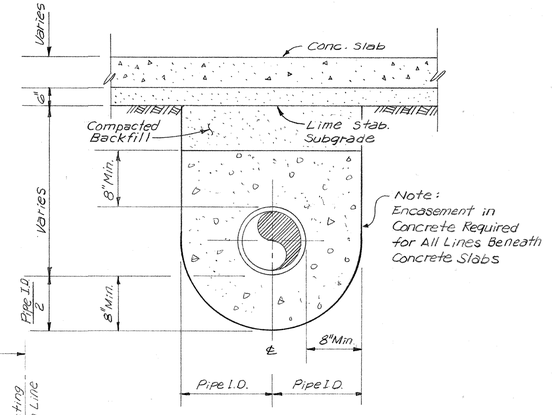

CONCRETE ENCASEMENT DETAIL E/5
SCALE: NONE

JOB NO. 3850-2

CITY OF HOUSTON
DEPARTMENT OF PUBLIC WORKS

ALMEDA SIMS
SLUDGE DISPOSAL PLANT
LIME STORAGE AND FEEDING FACILITY

MECHANICAL / STRUCTURAL SECTIONS AND DETAILS

RECOMMENDED FOR APPROVAL:
Kenneth R. Lindsey
BINKLEY & HOLMES, INC. CONSULTING ENGINEERS

STATE OF TEXAS — KENNETH R. LINDSEY — 31158 — REGISTERED PROFESSIONAL ENGINEER

STATE OF TEXAS — DOMENIC JN DENSO — 53093 — REGISTERED PROFESSIONAL ENGINEER

APPROVED:

Virginia Bolo — WASTEWATER	PAVING
WATER	CONSTRUCTION
STORM SEWER	
ASST. DIRECTOR	DIRECTOR

DESIGNED BY: DDC — SCALE: AS SHOWN
DRAWN BY: W.W.S. — DATE: AUG. 1982
CHECKED BY: K.R.L. — DRAWING NO.
SHEET — SHEET NO. 5 OF 10

DWG. NO. 27313

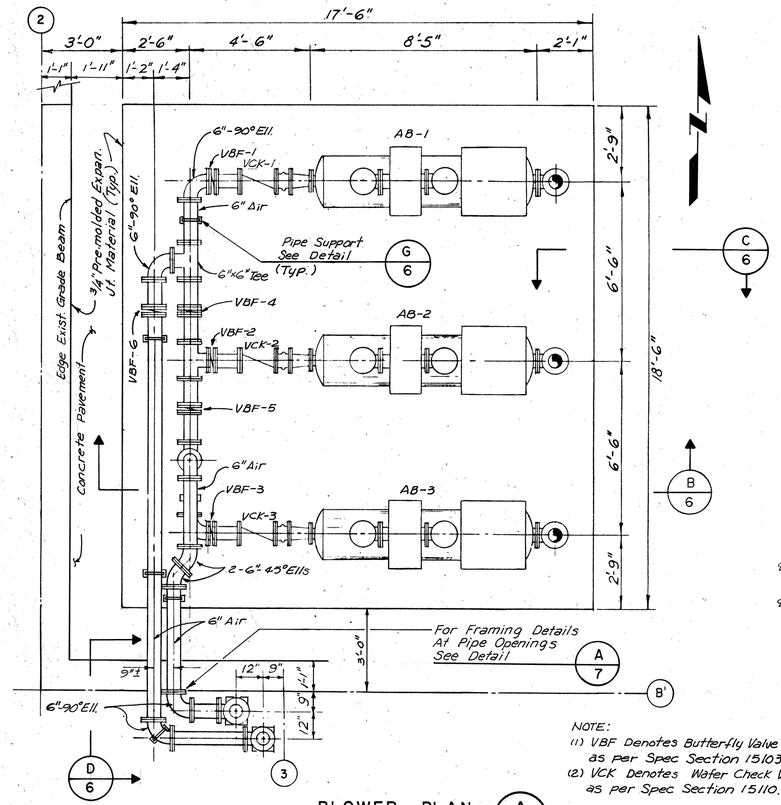

BLOWER PLAN A 6
SCALE: 3/8" = 1'-0"

NOTE:
(1) VBF Denotes Butterfly Valve as per Spec Section 15103
(2) VCK Denotes Wafer Check Valve, as per Spec Section 15110.

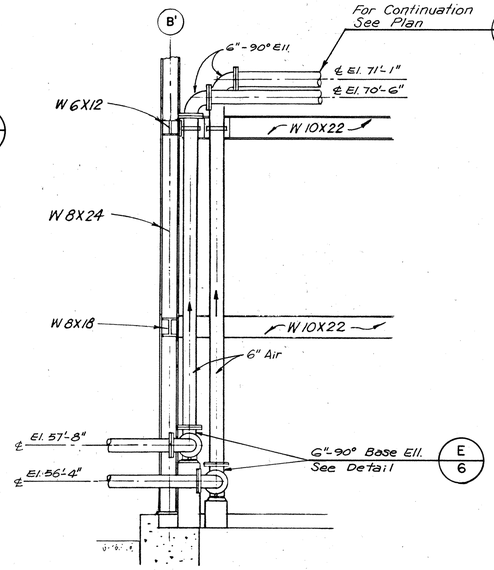

SECTION D 6
SCALE: 3/8"=1'-0"

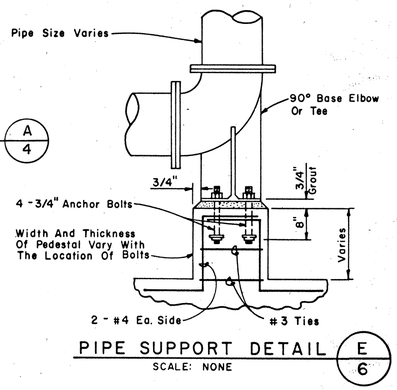

PIPE SUPPORT DETAIL E 6
SCALE: NONE

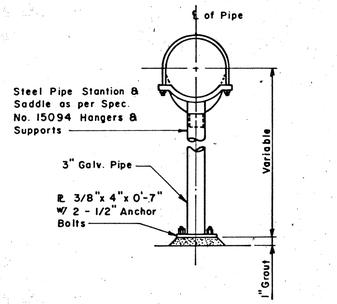

PIPE SUPPORT DETAIL F 6
SCALE: NONE

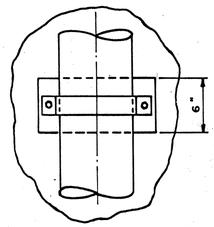

PLAN

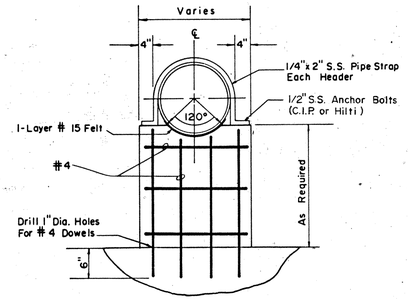

ELEVATION

PIPE SUPPORT DETAIL G 6
SCALE: NONE

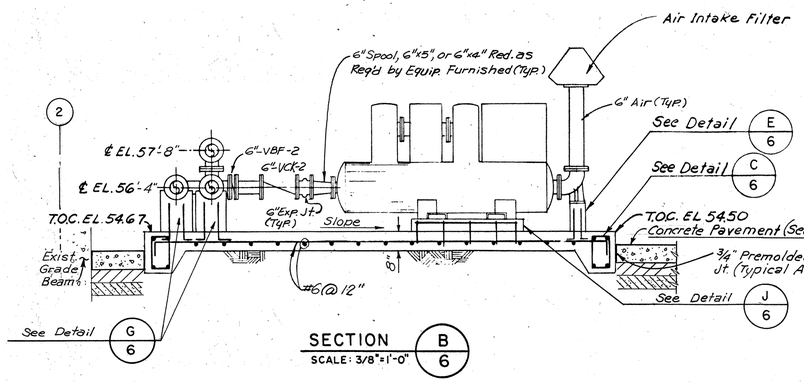

SECTION B 6
SCALE: 3/8"=1'-0"

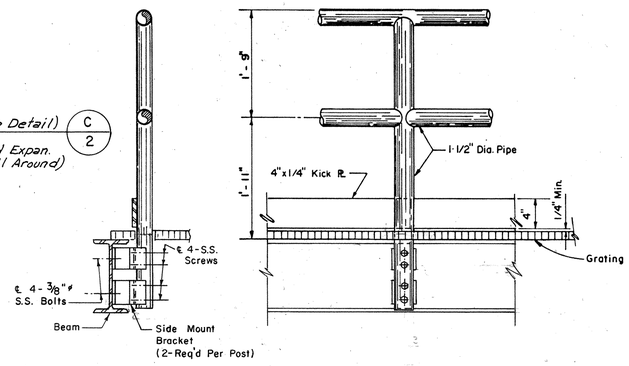

HANDRAIL DETAIL H 6
SCALE: NONE

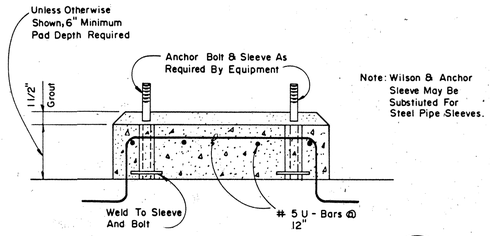

TYPICAL EQUIPMENT BASE DETAIL J 6
SCALE: NONE

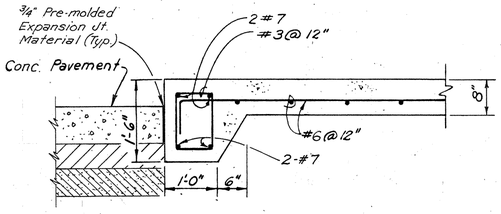

TYPICAL GRADE BEAM DETAIL C 6
SCALE: 3/4" = 1'-0"

JOB NO. 3850-2

CITY OF HOUSTON
DEPARTMENT OF PUBLIC WORKS

ALMEDA SIMS
SLUDGE DISPOSAL PLANT
LIME STORAGE AND FEEDING FACILITY

AIR BLOWER FACILITIES PLAN, SECTIONS AND DETAILS

RECOMMENDED FOR APPROVAL:
BINKLEY & HOLMES, INC. CONSULTING ENGINEERS

KENNETH R. LINDSEY 31158 REGISTERED PROFESSIONAL ENGINEER

DOMENIC DI CENSO 53093 REGISTERED PROFESSIONAL ENGINEER

APPROVED:

WASTEWATER	PAVING
WATER	CONSTRUCTION
STORM SEWER	
ASST. DIRECTOR	DIRECTOR

DESIGNED BY: D D C — SCALE: AS SHOWN
DRAWN BY: G.A.S. — DATE: AUG. 1982
CHECKED BY: K.R.L. — DRAWING NO.
SHEET — SHEET NO. 6 OF 10

DWG. NO. 27313

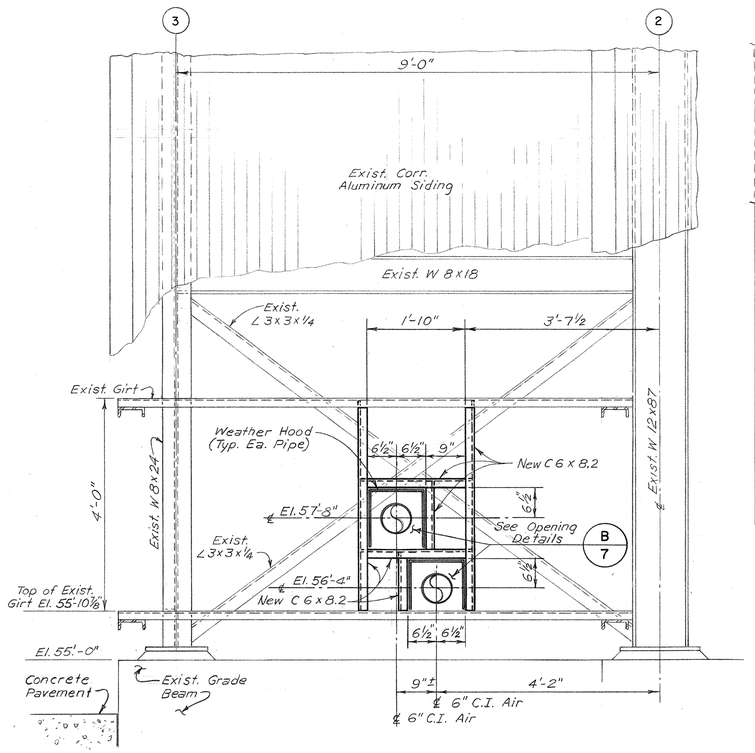

NORTH ELEVATION

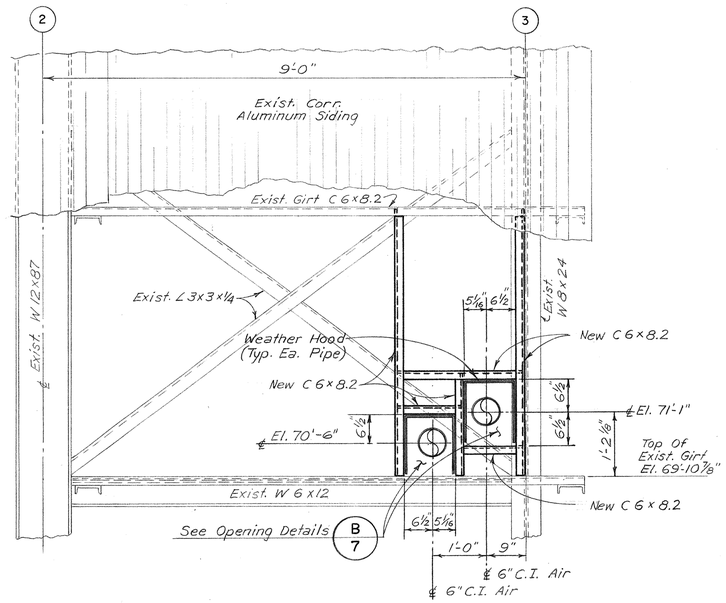

SOUTH ELEVATION

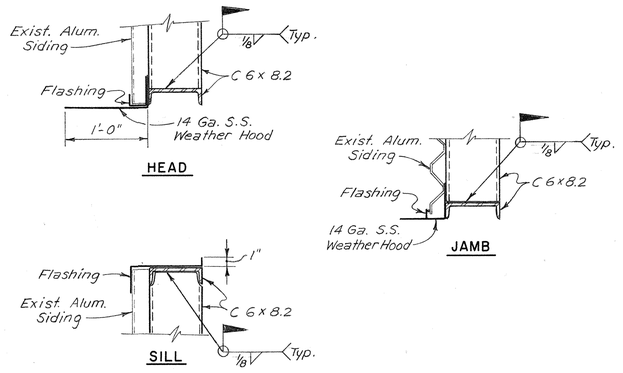

OPENING DETAILS B 7

SCALE: 1 1/2" = 1'-0"

FRAMING DETAILS AT PIPE OPENINGS A 7

SCALE: 3/4" = 1'-0"

BAR SIZE	LENGTH OF LAPPED SPLICES FOR REINFORCING IN INCHES			
	SPLICES NOT STAGGERED		WITH STAGGERED SPLICES	
	*TOP BARS	OTHERS	*TOP BARS	OTHERS
3	20	20	15	15
4	23	20	17	15
5	29	20	22	15
6	37	26	28	20
7	50	36	38	27
8	66	47	50	35
9	83	60	62	45
10	106	76	80	57
11	130	93	98	70

* Top bars are horizontal bars so placed that more than 12" of concrete is cast in the member below the bar. Horizontal bars in walls are to be provided with laps as required for top bars.

Except as otherwise indicated on the plans, lengths for lapped splices shall be not less than (no minus tolerance) shown above.

Lapped splices shall not be made at points of max. stress as determined by the Engineer, and shall not be spaced closer than 6" on centers. Splices are staggered if not more than 1/2 are spliced in a lap splice length.

CONCRETE COVER FOR REINFORCEMENT

LOCATION	MINIMUM COVER
Unformed Surfaces Adjacent to Excavation	3"
Unformed Surfaces Over Seal Slab	2"
Formed or Top Surfaces Exposed to Weather or Saturated Air, Submerged or in Contact with Earth:	
# 6 or Larger Bars	2"
# 5 or Smaller Bars	1 1/2"
Other Locations:	
Bars in Beams or Girders, Including Stirrups	1 1/2"
Column Spirals or Ties	1 1/2"
Other Bars: # 7 or Larger	Bar Diameter
# 6 or Smaller	3/4"

Cover for reinforcing steel shall not be less than the minimum given above (no minus tolerance), and shall not exceed the minimum by more than 1/4 inch where the concrete thickness is 24 inches or less, or more than 1/2 inch where the concrete thickness is more than 24 inches.

REINFORCING STANDARDS C 7

NOTE: These standards apply to the entire set of plans except where specifically shown otherwise.

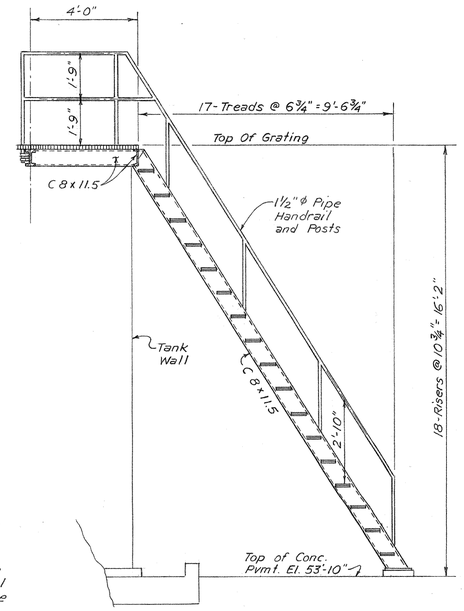

LADDER SECTION E 7

SCALE: 3/8" = 1'-0"

NOTE: For Ladder Welds and Bearings, See Detail F 7

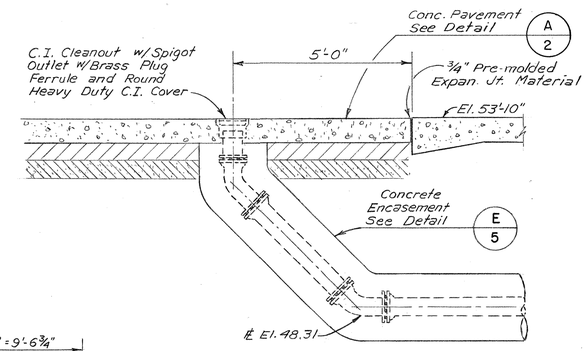

CLEANOUT DETAIL D 7

SCALE: 1/2" = 1'-0"

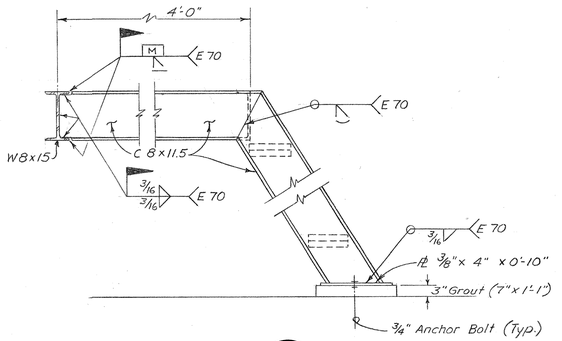

DETAIL F 7

SCALE: 1"= 1'-0"

JOB NO. 3850-2

CITY OF HOUSTON
DEPARTMENT OF PUBLIC WORKS

ALMEDA SIMS
SLUDGE DISPOSAL PLANT
LIME STORAGE AND FEEDING FACILITY

MISCELLANEOUS SECTIONS AND DETAILS

RECOMMENDED FOR APPROVAL:
BINKLEY & HOLMES, INC. CONSULTING ENGINEERS

STATE OF TEXAS — KENNETH R. LINDSEY — 31158 — REGISTERED PROFESSIONAL ENGINEER

STATE OF TEXAS — DOMENIC DI CENSO — 53093 — REGISTERED PROFESSIONAL ENGINEER

APPROVED:

WASTEWATER
WATER
STORM SEWER
ASST. DIRECTOR

PAVING
CONSTRUCTION
DIRECTOR

DESIGNED BY: D D C — SCALE: AS SHOWN
DRAWN BY: G.A.S. — DATE: AUG. 1982
CHECKED BY: K.R.L. — DRAWING NO.
SHEET — SHEET NO. 7 OF 10

DWG. NO. 27313

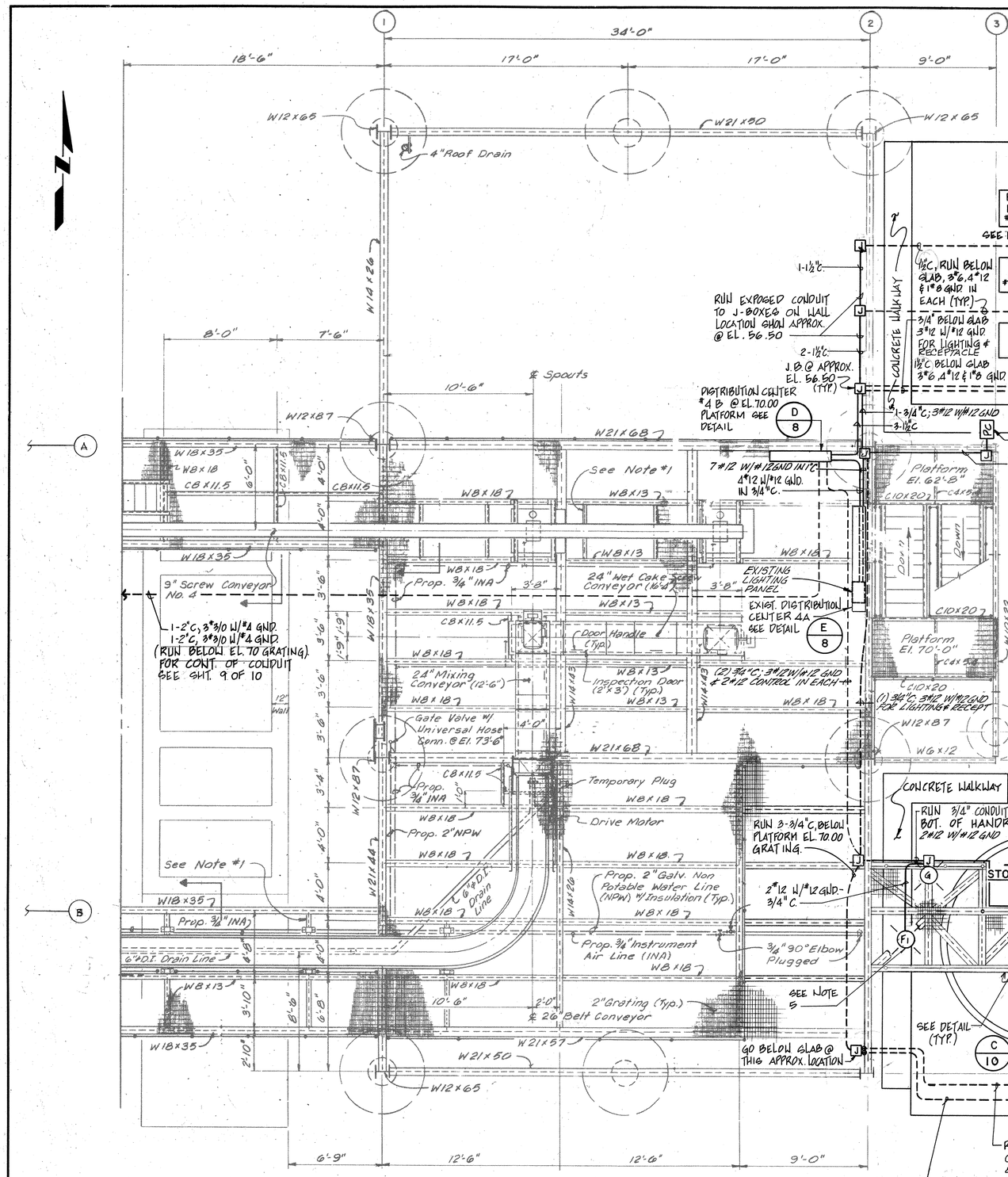

WORKING PLATFORM & BLOWER FACILITY ELECTRICAL PLAN — A / 10

SCALE: 1/4"=1'-0"

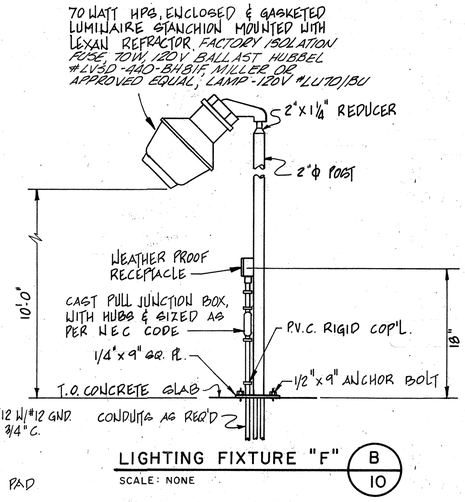

LIGHTING FIXTURE "F" — B / 10

SCALE: NONE

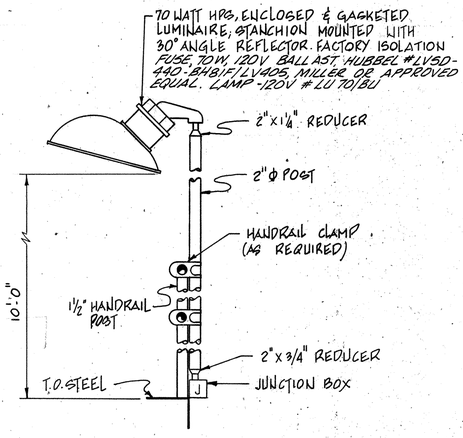

LIGHTING FIXTURE "G" — C / 10

SCALE: NONE

NOTES:

1. STUB UP WITH 1"C AND INSTALL J-BOX ABOVE SLAB MIN. 1'-0" (TYP.)
2. MOUNT ON-OFF SWITCH @ MIN. 3'-0" ABOVE CONCRETE SLAB (TYP.)
3. MOUNT PHOTO CELL OUTSIDE ON BLDG. STRUCTURE @ APPROX. EL. 70.00 & FACE NORTH.
4. SHADED AREA ON DWG. INDICATES EXISTING. DARKER LINE WORK INDICATES NEW.
5. INSTALL 70 WATT H.P.S. LIGHTING FIXTURE BELOW WALKWAY AT ELEV. 66.00 (12' ABOVE GRADE). THE LTG. FIXTURE SHALL BE HUBBELL CAT.# LVGB-240-BHBI-LVE401 OR EQUAL.

JOB NO. 3850-2

CITY OF HOUSTON
DEPARTMENT OF PUBLIC WORKS

ALMEDA SIMS SLUDGE DISPOSAL PLANT

LIME STORAGE AND FEEDING FACILITY

BLOWER AND PUMPING FACILITIES ELECTRICAL PLAN AND DETAILS

RECOMMENDED FOR APPROVAL:

BINKLEY & HOLMES, INC. CONSULTING ENGINEERS

STATE OF TEXAS — KENNETH E. LINDSEY — 31158 — REGISTERED PROFESSIONAL ENGINEER

STATE OF TEXAS — JERRY M. BARFIELD — 38827 — REGISTERED PROFESSIONAL ENGINEER

APPROVED:

WASTEWATER

PAVING CONSTRUCTION

WATER

STORM SEWER

ASST. DIRECTOR

DIRECTOR

DESIGNED BY: M.D.L. SCALE: AS SHOWN
DRAWN BY: N.H. DATE: AUGUST, 1982
CHECKED BY: L.M.B. DRAWING NO.
SHEET SHEET NO. 10 OF 10

DWG. NO. 27313

64300/8070-G00.DWG

CITY OF HOUSTON

DEPARTMENT OF PUBLIC WORKS AND ENGINEERING
ENGINEERING, CONSTRUCTION AND REAL ESTATE

IMPROVEMENTS AT VARIOUS WASTEWATER SLUDGE FACILITIES
ALMEDA-SIMS SLUDGE PROCESSING FACILITY

GFS NO R-0298-04-3 FILE NO 4289-2

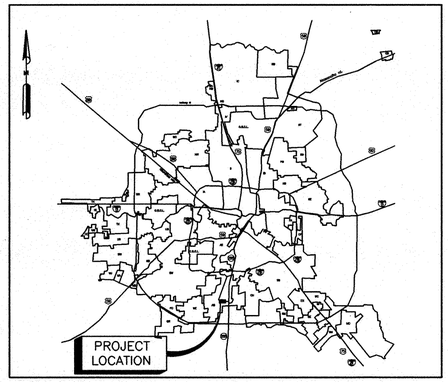

LOCATION MAP
NTS
(KEY MAP NO 572L)

VOLUME 1 OF 2

ROGER C. BROWN
52635
REGISTERED
PROFESSIONAL ENGINEER
5-97

CH2M HILL
7600 West Tidwell Road, Suite 400
Houston, Texas 77040-5719
713.462.0161

Binkley & Barfield, Inc.
Consulting Engineers
1710 Seamist Drive Houston, Texas 77008

MAYOR
BOB LANIER

CONTROLLER
LLOYD KELLEY

APPROVED
CITY OF HOUSTON

DISTRICT COUNCIL MEMBERS

HELEN HUEY DISTRICT A	MICHAEL J. YARBROUGH DISTRICT B	MARTHA J. WONG DISTRICT C
JEW DON BONEY, JR. DISTRICT D	ROB TODD DISTRICT E	RAY F. DRISCOLL DISTRICT F
JOHN KELLEY DISTRICT G	FELIX FRAGA DISTRICT H	JOHN E. CASTILLO DISTRICT I

COUNCIL MEMBERS AT-LARGE

GRACIE GUZMAN SAENZ POSITION 1	JOE ROACH POSITION 2
ORLANDO SANCHEZ POSITION 3	CHRIS BELL POSITION 4
JUDSON W. ROBINSON III POSITION 5	

7/8/97
CITY ENGINEER DATE
RICHARD C. SCOTT, P.E.

7-8-97
DIRECTOR OF PUBLIC WORKS AND ENGINEERING DATE
JIMMIE SCHINDEWOLF, P.E.

CITY DWG. NO: 33,007
SHEET NO 1 OF 56 SHEETS

64300/8070-G00.DWG

FILE DATE:--OPERATOR: 04/22/97--DVB

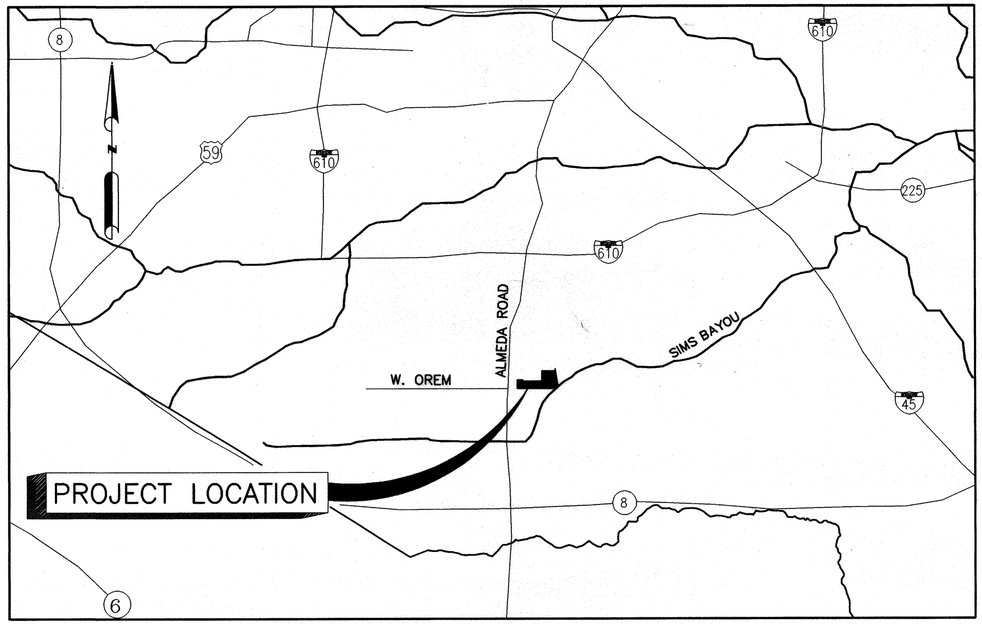

PROJECT LOCATION MAP
NTS

INDEX OF DRAWINGS

SHEET NUMBER	DRAWING NUMBER	TITLE
GENERAL		
1	G-00	COVER SHEET
2	G-01	PROJECT LOCATION, VICINITY MAP, & INDEX
3	G-02	ABBREVIATIONS
4	G-03	GENERAL CIVIL, STRUCTURAL & ARCHITECTURAL LEGEND
CIVIL		
5	C-01	OVERALL SITE PLAN
6	C-02	STANDARD CONSTRUCTION SIGN DETAIL
PROCESS & INSTRUMENTATION		
7	I-01	PROCESS AND INSTRUMENTATION I AND C LEGEND
8	I-02	PROCESS AND INSTRUMENTATION I AND C LEGEND
9	I-03	P & I D TYPICAL BELT FILTER PRESS
10	I-04	P & I D POLYMER SYSTEM
11	I-05	P & I D SLUDGE FEED & CONVEYORS
12	I-06	P & ID NON POTABLE PLANT WATER SYSTEM
13	I-07	MISCELLANEOUS CONTROL SCHEMATIC BELT FILTER PRESS
14	I-08	MISCELLANEOUS CONTROL SCHEMATIC BELT FILTER PRESS
15	I-09	MISCELLANEOUS CONTROL SCHEMATIC BELT FILTER PRESS

SHEET NUMBER	DRAWING NUMBER	TITLE
DEWATERING FACILITY		
16	M-01	MECHANICAL LEGEND
17	M-02	SCHEMATIC PIPING PLAN PHASE I DEMOLITION
18	M-03	SCHEMATIC PIPING PLAN PHASE I CONSTRUCTION
19	M-04	SCHEMATIC PIPING PLAN PHASE II DEMOLITION
20	M-05	SCHEMATIC PIPING PLAN PHASE II CONSTRUCTION
21	M-06	EQUIPMENT & LIGHTING DEMOLITION PLAN @ ELEV. 70.50
22	M-07	EQUIPMENT DEMOLITION PLAN @ ELEVATION 54.50
23	M-08	BELT FILTER PRESS PLAN
24	M-09	BELT FILTER PRESS SECTIONS AND DETAILS
25	M-10	BELT FILTER PRESS EQUIPMENT PIPING PLAN
26	M-11	POLYMER DILUTION SYSTEM PLAN AND SECTION
27	M-12	POLYMER DILUTION SYSTEM SECTIONS
28	M-13	POLYMER DILUTION SYSTEM TANK NOZZLE LOCATIONS TOP AND BOTTOM VIEWS
29	M-14	NON POTABLE WATER SYSTEM PLAN AND SECTION
30	M-15	NON POTABLE WATER SYSTEM SECTIONS
31	M-16	PROCESS SLUDGE PUMPS PLAN AND SECTION
32	M-17	PROCESS SLUDGE PUMPS SECTIONS AND DETAILS
33	M-18	FILTRATE SEAL PIT MODIFICATONS SECTIONAL VIEWS
34	M-19	FILTRATE SEAL PIT PLAN, SECTION, AND DETAILS
35	M-20	LUNCH ROOM MODIFICATIONS PLAN AND SECTIONS
36	M-21	RESTROOM MODIFICATIONS, PLANS, SECTIONS, AND DETAILS
37	M-22	RESTROOM MODIFICATIONS DETAILS

SHEET NUMBER	DRAWING NUMBER	TITLE
STRUCTURAL		
38	S-01	STRUCTURAL FLOOR SLAB MODIFICATIONS AT BFP
39	S-02	STRUCTURAL SECTIONS & DETAILS
40	S-03	STRUCTURAL EAST WALL MODIFICATIONS
41	S-04	STANDARD REINFORCED CONCRETE DETAILS
42	S-05	STANDARD PIPE SUPPORT DETAILS
43	S-06	MISCELLANEOUS STANDARD DETAILS
ELECTRICAL		
44	E-01	ELECTRICAL SYMBOLS LEGEND LIGHTING FIX. SCH. AND ABB.
45	E-02	ELECTRICAL POWER DISTRIBUTION ONE LINE DIA. -KEY PLAN
46	E-03	ELECTRICAL ONE LINE DIAGRAM MOTOR CONTROL CENTER IB
47	E-04	ELECTRICAL ONE LINE DIAGRAM MOTOR CONTROL CENTER 2B
48	E-05	ELECTRICAL PANEL SCHEDULES AND MCC ELEVATIONS
49	E-06	DEWATERING FACILITY ELEVATION 70.50 ELECTRICAL PLAN
50	E-07	POLYMER DILUTION SYSTEM ELECTRICAL POWER PLAN
51	E-08	ELECTRICAL PLAN PLANT WATER AND SLUDGE FEED PUMP
52	E-09	ELEC PLAN MOD TO LUNCH RM, CTRL RM, & RESTROOM
53	E-10	ELECTRICAL PLAN CONVEYORS "A" THRU "F"
54	E-11	DEWATERING FACILITY ELEV. 70.50 ELECT. GROUNDING PLAN
55	E-12	DEWATERING FACILITY ELEV. 70.50, PROP LIGHTING PLAN
56	E-13	DEWATERING FACILITY ELEV. 70.50, LIGHTING MODIFICATIONS

SEAL: STATE OF TEXAS — H. J. KJELLBERG — 38055 — REGISTERED PROFESSIONAL ENGINEER — 4/30/97

CADD DWG FILE NO: 64300/G01.DWG

COHSTD.BDR

0 1 2 3 ORIGINAL SCALE IN INCHES FOR REDUCED PLANS

REV NO	DESCRIPTION	APP'D	DATE

CH2M HILL
7600 West Tidwell Road, Suite 400
Houston Tx 77040
713.462.0161

Binkley & Barfield, Inc.
Consulting Engineers
1710 Seamist Drive Houston, Texas 77008

ALMEDA SIMS
SLUDGE PROCESSING FACILITY IMPROVEMENTS

GFS NO R-0298-04-3
FILE NO: 4289-2

PROJECT LOCATION, VICINITY MAP, AND DRAWING INDEX

CITY OF HOUSTON
DEPARTMENT OF PUBLIC WORKS AND ENGINEERING
ENGINEERING, CONSTRUCTION AND REAL ESTATE GROUP

SECTION APPROVALS

WATER ENGINEERING — TRAFFIC AND SIGNAL ENGINEERING

WASTEWATER ENGINEERING 7/1/97 — STREET & BRIDGE ENGINEERING

STORM SEWER ENGINEERING — CONSTRUCTION Russell E. Mais 7/3/97

OTHER DEPARTMENTS

PLANNING AND DEVELOPMENT — SPONSOR DEPARTMENT

CITY ENGINEER 7/7/97 DATE

DIRECTOR OF PUBLIC WORKS AND ENGINEERING 7-8-97 DATE

SUBMITTED:
SCALE: NONE
DATE: JUNE 1997
SURVEY BY:
F B NO:

DESIGNED BY: HJK
DRAWN BY: AAA
DWG NO: G-01
SHEET NO 2 OF 56 SHEETS
CITY DWG NO: 33007

FILE DATE--OPERATOR: 04/22/97-DVB

A	AMMETER, AMPERES	CT	CERAMIC TILE	GFI	GROUND FAULT INTERRUPTER	MGD	MILLION GALLONS PER DAY	RHR	RIGHT HAND REVERSE	TRANS	TRANSFORMER
AB	ANCHOR BOLT	CT	CURRENT TRANSFORMER	GFR	GROUND FAULT RELAY	MH	MANHOLE	RL	RAIN LEADER	TRANSV	TRANSVERSE
ABDN	ABANDON	CTR	CENTER	GL	GLASS	MIN	MINIMUM	RL	RAISE LOWER	TDR	TREAD
AC	ALTERNATING CURRENT	CTR'D	CENTERED	GPD	GALLONS PER DAY	MIR	MIRROR	RLS	RUBBER LINED STEEL	TS	TUBE STEEL
AC	ASPHALTIC CEMENT	CTSK	COUNTERSUNK	GPH	GALLONS PER HOUR	MISC	MISCELLANEOUS	RM	ROOM	TTD	TOILET TISSUE DISPENSER
ACI	AMERICAN CONCRETE INSTITUTE	CU	CUBIC	GPM	GALLONS PER MINUTE	MJ	MECHANICAL JOINT	ROL	RAISE-OFF-LOWER	TU-X	TREATMENT UNIT NO. X
ACST	ACOUSTICAL	CU FT	CUBIC FOOT	GRTG	GRATING	MLO	MAIN LUGS ONLY	RPM	REVOLUTIONS PER MINUTE	TURB	TURBIDITY
ACU	AIR CONDITIONING CONDENSING UNIT	CU IN	CUBIC INCH	GSP	GALVANIZED STEEL PIPE	MMP	MECHANICAL MOUNTING PANEL	RS	RIGID STEEL	TYP	TYPICAL
AD	AREA DRAIN	CU YD	CUBIC YARD	GV	GATE VALVE	M.O.	MASONRY OPENING	RST	REINFORCING STEEL	U ON	UNLESS OTHERWISE NOTED
ADD	ADDITIONAL	CUH	COPPER TUBING, HARD DRAWN	GVL	GRAVEL	MP	METAL PANEL	RTN	RETURN	UBC	UNIFORM BUILDING CODE
AFD	ADJUSTABLE FREQUENCY DRIVE	CV	CHECK VALVE	GWB	GYPSUM WALL BOARD	MPU	MULTIPURPOSE UNIT	RRUB	RADIAL RUBBER	UH	UNIT HEATER
AFF	ABOVE FINISHED FLOOR	CWR	CABINET DOOR MOUNTED WASTE RECEPTACLE	GYP	GYPSUM	MTD	MOUNTED	R/W	RIGHT OF WAY	UR	URINAL
AG	ACOUSTICAL GLASS			H	HORN OR HOWLER	MTS	MANUAL TRANSFER SWITCH	S	I-BEAM	UVR	UNDER VOLTAGE RELAY
AGGR	AGGREGATE	D	DRAIN	HAS	HEADED ANCHOR STUD	MTS	MILL TYPE STEEL PIPE	S	SLOPE	V	VALVE
AHR	ANCHOR	D	PENNY NAIL SIZE	HB	HOSE BIB	MV	MERCURY VAPOR	S	SOUTH	V	VENT
AISC	AMERICAN INSTITUTE OF STEEL CONSTRUCTION	DAS	DATA ACQUISITION SYSTEM	HC	HOLLOW CORE	MWS	MAXIMUM WATER SURFACE	S	SWITCH	V	VOLT
		DBA	DEFORMED BAR ANCHOR	HD	HUB DRAIN	N	NORTH	SAN	SANITARY	V	VOLTMETER, VOLTS
AL (ALUM)	ALUMINUM	DBL	DOUBLE	HDR	HEADER	N/A	NOT APPLICABLE	SATC	SUSPENDED ACOUSTICAL TILE CEILING	VB	VAPOR BARRIER
ALKY	ALKALINITY	DC	DIRECT CURRENT	HDW	HARDWARE	N/C	NORMALLY CLOSED	SC	SHOWER CURTAIN	VC	VERTICAL CURVE
ALTN, (ALT)	ALTERNATE	DEG	DEGREE	HESR	HYPALON ELASTIC SHEET ROOFING	N/O	NORMALLY OPEN	SCBA	SELF CONTAINED BREATHING APPARATUS	VCP	VITRIFIED CLAY PIPE
AM	AUTO-MANUAL	DET	DETAIL	HGL	HYDRAULIC GRADE LINE	N, NEUT	NEUTRAL	SCC	SOLID CORE	VDR	VERTICAL DRYING RACK
ANDZ	ANODIZE	DF	DOUGLAS FIR	HGT	HEIGHT	NA	NON-AUTOMATIC	SCDOH	SOUTH CAROLINA DEPARTMENT OF HIGHWAYS	VERT	VERTICAL
APPROX	APPROXIMATE	DF	DRINKING FOUNTAIN	HH	HANDHOLE	ND	NAPKIN DISPOSAL	SCFM	STANDARD CUBIC FEED PER MINUTE	VIB	VIBRATION
APVD	APPROVED	DHEC	DEPT OF HEALTH AND ENVIRONMENTAL CONTROL	HID	HIGH INTENSITY DISCHARGE	NGS STA	NATIONAL GEODETIC SURVEY STATION	SCH	SCHEDULE	VP	VENEER PLASTER
ARCH	ARCHITECTURAL			HK	HOOK	NIC	NOT IN CONTRACT	SCPW	SUMMERVILLE COMMISSIONERS OF PUBLIC WORKS	VPC	POINT OF VERTICAL CURVATURE
AR	ANALOG RELAY	DDI	DROP INLET	HM	HOLLOW METAL	NO, #	NUMBER			VPI	POINT OF VERTICAL INTERSECTION
ARV	AIR RELEASE VALVE	DI	DUCTILE IRON	HOA	HAND-OFF-AUTO	NP	NON-PROTECTED	SCR	SHOWER CURTAIN ROD	VPS	VENEER PLASTER SYSTEM
ASTM	AMERICAN SOCIETY FOR TEST MATERIALS	DIA, O	DIAMETER	HOR	HAND-OFF-REMOTE	NPT	NATIONAL PIPE THREADS	SCU	SPEED CONTROL UNIT	VPT	POINT OF VERTICAL TANGENT
		DIAG	DIAGONAL	HORIZ	HORIZONTAL	NS	NON-SHRINK	SD	SOAP DISPENSER	VT	VINYL TILE
ASU	AIR SUPPLY UNIT	DIP	DUCTILE IRON PIPE	HP	HORSEPOWER	NTS	NOT TO SCALE	SDMH	STORM DRAIN MANHOLE	VTR	VENT THRU ROOF
ATS	AUTOMATIC TRANSFER SWITCH	DIR	DIRECTION	HP	HIGH PRESSURE	O TO O	OUT TO OUT	SDWK	SIDEWALK	W	WEST
AUTO	AUTOMATIC	DISCH	DISCHARGE	H.P.	HIGH POINT	OA	OVERALL	SEC	SECONDARY	W	WIDE FLANGE (BEAM)
AUX	AUXILIARY	DOL	DIRECT-ON-LINE	HPS	HIGH PRESSURE SODIUM	OC	ON CENTER	SECT	SECTION	W/	WITH
AVG	AVERAGE	DS	DOWNSPOUT	HR	HOSE RACK	OC	OPEN-CLOSE	SED	SEDIMENTATION	WC	WATER CLOSET
AVRV	AIR VACUUM RELEASE VALVE	DWG	DRAWING	HRDN	HARDENER	OCA	OPEN-CLOSE-AUTO	SEW	SEWAGE	WD	WOOD
@	AT	DWN	DOWN	HV	HOSE VALVE	OCR	OPEN-CLOSE-REMOTE	SF	SLOWER-FASTER	WG	WIRE GLASS
B	BELL	△	DELTA	HVAC	HEATING, VENTILATING AND AIR CONDITIONING	OD	OUTSIDE DIAMETER	SF	SQUARE FEET	WH	WATER HEATER
(B)	BRONZE TINT	E	EAST			OF	OUTSIDE FACE	SFP	SLUDGE FEED PUMP	WH	WATTHOUR METER
BAL	BALANCE	E	EMPTY	HW	HEADWALL	OL	OVERLOAD RELAY	SG	LAMINATED SAFETY GLASS	WHD	WATTHOUR DEMAND METER
BD	BUTTERFLY DAMPER	EA	EACH	HWL	HIGH WATER LEVEL	OO	ON-OFF	SGWB	SUSPENDED GYPSUM WALL BOARD	WP	WATERPROOF
BF	BLIND FLANGE	EE	EMERGENCY EYEWASH	IC	INTERRUPTING CAPACITY	OOA	ON-OFF-AUTO	SH	SHOWER	WP	WEATHERPROOF
BFV	BUTTERFLY VALVE	EF	EACH FACE	ID	INSIDE DIAMETER	OOR	ON-OFF-REMOTE	SH (SHT)	SHEET	WR	WASTE RECEPTACLE
BL	BASELINE	EF	EXHAUST FAN	IE	INVERT ELEVATION	OP	OPAQUE PANEL	SHA	SURFACE HARDENING AGENT	WS	WATER SURFACE
BFP	BACKFLOW PREVENTER	EL, ELEV	ELEVATION	IF	INSIDE FACE	OPER	OPERATOR	SHS	SOLIDS HANDLING SYSTEM	WS	WATERSTOP
BLDG	BUILDING	ELB	ELBOW	IG	INSULATING GLASS	OPNG	OPENING	SIM	SIMILAR	WS	WELDED STEEL
BLK	BLOCK	EIFS	EXTERIOR INSULATION FINISH SYSTEM	IN	INCH	OSC	OPEN-STOP-CLOSE	SMH	STORMWATER MANHOLE	WTP	WATER TREATMENT PLANT
BM	BEAM	ELC	ELECTRICAL LOAD CENTER	INCAND	INCANDESCENT	OSD	OPEN SITE DRAIN	SOLN	SOLUTION	WTR	WATER
BM	BENCHMARK	ELEC	ELECTRIC, ELECTRICAL	INJS	INJECTIONS	OZ	OUNCE	SP	SPACE OR SPACES	WU	WALL URN
BOT, (BOTT), B/	BOTTOM	ENGR	ENGINEER	INST	INSTANTANEOUS	P	PILASTER, PIPE	SPA.	SPACING	WWTP	WASTEWATER TREATMENT PLANT
BRG	BEARING	EOG	EDGE OF GUTTER	INSTM	INSTRUMENT, INSTRUMENTATION	PAV	PAVER TILE	SPEC, SPECS	SPECIFICATIONS	<	LESS THAN
BSP	BLACK STEEL PIPE	EOP	EDGE OF PAVEMENT	INSUL	INSULATION	PB	PUSHBUTTON SWITCH	SPEC'D.	SPECIFIED	>	GREATER THAN
BV	BALL VALVE	EP	EDGE OF PAVING	INVT	INVERT	PC	PHOTOCELL	SPLY	SUPPLY	≤	LESS THAN OR EQUAL
BVC	BEGINNING OF VERTICAL CIRCUIT	EP	EXPLOSION PROOF	IRRIG	IRRIGATION	PC	POINT OF CURVE	SQ	SQUARE	≥	GREATER THAN OR EQUAL
C	CONDUIT	EQ	EQUAL	ITG	INSULATED TEMPERED GLASS	PE	PLAIN END	SQ FT	SQUARE FOOT, FEET	=	EQUAL
°C	DEGREE CELSIUS	EQ SP	EQUALLY SPACED	IU	INTAKE UNIT	PED	PEDESTAL	SQ IN	SQUARE INCH		
C-C	CENTER TO CENTER	EQPT, (EQUIP)	EQUIPMENT	IW	IRRIGATION WELL	PEP	POLYETHYLENE PIPE	SR	SHORT RADIUS		
CAB	CABINET	ETM	ELAPSED TIME METER	J, JB	JUNCTION BOX	PH	HYDROGEN ION CONCENTRATION	SS	START-STOP		
CAR	CARPET	EVC	END OF VERTICAL CURVE	JAN	JANITOR	PI	POINT OF INTERSECTION	SS, SST	STAINLESS STEEL		
CB	CATCH BASIN	EW	EACH WAY	JCT	JUNCTION	PJF	PREMOULD JOINT FILLER	SSH	SAFETY SHOWER		
CB	CIRCUIT BREAKER	EXH	EXHAUST	JT	JOINT	PL	PLATE (STEEL)	SSK	SERVICE SINK		
CC	CONTROL CABLE	EXP	EXPANSION	K	KEY INTERLOCK	PL	PROPERTY LINE	STA	STATUS		
CCP	CENTRAL CONTROL PANEL	EXP	EXPOSED	KIP	THOUSAND POUNDS	PLAS	PLASTIC	STD	STANDARD		
CCS	CENTRAL CONTROL SYSTEM	EXP AB	EXPANSION ANCHOR BOLT	KIT	KITCHEN	PLC	PROGRAMMABLE LOGIC CONTROLLER	STIF	STIFFENER		
CFM	CUBIC FEET PER MINUTE	EXP JT	EXPANSION JOINT	KSK	KITCHEN SINK	PLC-X	PROGRAMMABLE LOGIC CONTROLLER NO. X	STIRR	STIRRUP		
CFS	CUBIC FEET PER SECOND	EXIST, (EXIST)	EXISTING	KV	KILOVOLTS			STL	STEEL		
CHAN, C	CHANNEL (BEAM)	EXT	EXTERIOR	KVA	KILOVOLT AMPERES	PLYWD	PLYWOOD	ST	STRAIGHT		
CHEM	CHEMICAL	°F	DEGREE FAHRENHEIT	KVAR	KILOVOLT AMPERES REACTIVE	PNL	PANEL	STRL	STRUCTURAL		
CI	CAST IRON	F, FU	FUSE	KW	KILOWATT	PP	POWER POLE	STRUCT	STRUCTURE		
CIP	CAST IRON PIPE	FAI	FRESH AIR INLET	L	ANGLE, LENGTH	PPL	POLYPROPYLENE LINED	SUSP	SUSPENDED		
CIPS	CAST IRON SOIL PIPE	FC	FLEXIBLE CONDUIT	LA	LIGHTNING ARRESTER	PRCST	PRECAST	SV	SOLENOID VALVE		
CJ	CONSTRUCTION JOINT	FCA	FLANGED COUPLING ADAPTER	LAB	LABORATORY	PREFAB	PREFABRICATION	SWR	SEWER		
CKT	CIRCUIT	FCL2	FREE CHLORINE RESIDUAL	LAM	LAMINATE	PRES	PRESSURE	SYMM	SYMMETRICAL		
℄	CENTERLINE	FCO	FLOOR CLEANOUT	LAT	LATITUDE	PRI	PRIMARY	T	THERMOSTAT		
CLDIP	CEMENT LINED DUCTILE IRON PIPE	FCTY	FACTORY	LAV	LAVATORY	PRM	PERMANENT REFERENCED MARKER	T	THICKNESS		
CLG	CEILING	FD	FLOOR DRAIN	LB	POUND	PROJ	PROJECTION	T&B	TOP AND BOTTOM		
CLO	CLOSET	FDN	FOUNDATION	LB/CU FT	POUNDS PER CUBIC FOOT	PROP	PROPERTY	T&G	TONGUE AND GROOVE		
CLR	CLEAR	FDR	FEEDER	LC	LIGHTING CONTACTOR	PS	POLYCARBONATE SHEET	T/	TOP OF		
CL2	CHLORINE	FEXT	FIRE EXTINGUISHER	LF	LINEAR FEET	PSF	POUNDS PER SQUARE FOOT	TAN	TANGENT		
CMP	CORRUGATED METAL PIPE	FF	FINISHED FLOOR	LG	LONG	PSI	POUNDS PER SQUARE INCH	TB	TERMINAL BOARD		
CMU	CONCRETE MASONRY UNIT	FG	FINISH GRADE	LH	LEFT HAND	PSIG	POUNDS PER SQUARE INCH, GAUGE	TB	TOWEL BAR		
CO	CLEANOUT	FHY	FIRE HYDRANT	LHR	LEFT HAND REVERSE	PT	POINT OF TANGENCY	TBG	TUBING		
COL	COLUMN	FIG	FIGURE	LLH	LONG LEG HORIZONTAL	PT	POTENTIAL TRANSFORMER	TC	TIME TO CLOSE		
CONC	CONCRETE	FL	FLOW LINE	LLV	LONG LEG VERTICAL	PT	PRESSURE TREATED	TCAE	TIME CLOSE AFTER ENERGIZATION		
CONDTN	CONDITIONED	FLG	FLANGE	LNTL	LINTEL	PTAC	PACKAGED TERMINAL AIR CONDITIONING	TCL2	TOTAL CHLORINE RESIDUAL		
CONN	CONNECTION	FL (FLR)	FLOOR	LONG	LONGITUDINAL	PTW	POTABLE WATER	TDH	TOTAL DYNAMIC HEAD		
CONT	CONTINUOUS, CONTINUATION	FLEX	FLEXIBLE	LOS	LOCK-OUT STOP PUSHBUTTON	PTD	PAPER TOWEL DISPENSER	TDR	TIME DELAY RELAY		
CONTR	CONTRACTOR	FLH	FLAT HEAD	LP	LIGHT POLE	PV	PLUG VALVE	TECH	TECHNICAL		
COORD	COORDINATE	FLTR	FILTER	L.P.	LOW POINT	PVC	POLYVINYL CHLORIDE	TEL	TELEPHONE		
COP	COPPER	FLUOR	FLUORESCENT	LR	LATCHING RELAY	PVI	POINT OF VERTICAL INTERSECTION	TEMP	TEMPORARY		
CP	CENTER PIVOT	FNSH	FINISH	LR	LOCAL-REMOTE	PVMT	PAVEMENT	TF	TOP FACE		
CP-X	CONTROL PANEL NO. X	FP	FIELD PANEL	LR	LONG RADIUS	PVT	POINT OF VERTICAL TANGENCY	TFG	TEMPERED FLOAT GLASS		
CPLG	COUPLING	FPS	FEET PER SECOND	LS	LABORATORY SINK	QT	QUARRY TILE	THD	THREAD		
CPRSR	COMPRESSOR	FP-W-X	FIELD PANEL NO. WX	LTG	LIGHTS OR LIGHTING	R (RAD)	RADIUS	THRU	THROUGH		
CPT	CONTROL POWER TRANFORMER	FR	FORWARD REVERSE	LWL	LOW WATER LEVEL	RC	REINFORCED CONCRETE	TJB	TERMINAL JUNCTION BOX		
CPVC	CHLORINATED PVC	FRP	FIBERGLASS REINFORCED PLASTIC	LYRS	LAYERS	RCP	REINFORCED CONCRETE PIPE	TL	TEFLON LINE PIPE		
CR	CONTROL RELAY	FSHS	FOLDING SHOWER SEAT	M&BH	MOP AND BROOM HOLDER	RCPT	RECEPTACLE	TO	TIME TO OPEN		
CRS	COLD ROLLED STEEL	FT	FOOT OR FEET	MA	MANUAL-AUTO	RD	ROAD	TOAD	TIME CLOSE AFTER DE-ENERGIZATION		
CRS	PVC COATED RIGID STEEL	FTG	FOOTING	MAS	MASONRY	RD	ROOF DRAIN	TOC	TOP OF CONCRETE		
CS	CUP SINK	FU	FIXTURE UNIT	MATL	MATERIAL	RDCR	REDUCER	TOG	TOP OF GRATING		
CSATC	CERAMIC SUSPENDED ACOUSTICAL TILE CEILING	FVNR	FULL VOLTAGE NON-REVERSING	MAX	MAXIMUM	RDW	REDWOOD	TOAE	TIME OPEN AFTER ENERGIZATION		
		FVR	FULL VOLTAGE REVERSING	MB	MACHINE BOLT	REF	REFER OR REFERENCE	TP	TURNING POINT		
		FWD	FORWARD	MC	MASONRY CLEARANCE	REF	REFRIGERATOR				
		G, GND	GROUND	MC	MODULATE-CLOSE	REFR	REFRIGERATE, REFRIGERANT				
		GA	GAUGE	MCC	MOTOR CONTROL CENTER	REINF	REINFORCED, REINFORCING, REINFORCE				
		GAL	GALLON	MECH	MECHANICAL	REQD	REQUIRED				
		GALV	GALVANIZED	MET	METAL	RG	REFLECTIVE				
		GB	GRAB BAR	MFD	MANUFACTURED	RH	RIGHT HAND				
		GC	GROOVED COUPLING	MFR	MANUFACTURER	RH	RODHOLE				

NOTES:

THIS IS A STANDARD LEGEND SHEET, THEREFORE SOME ABBREVIATIONS MAY APPEAR ON THIS SHEET AND NOT ON THE DRAWINGS. CONTACT ENGINEER FOR ABBREVIATIONS NOT USED.

SEE MECHANICAL AND INSTRUMENTATION LEGENDS FOR FLOW STREAM IDENTIFICATIONS.

SEAL

STATE OF TEXAS
H. J. KJELLBERG
38055
REGISTERED PROFESSIONAL ENGINEER

6/30/97

CADD DWG FILE NO: 64300/G02.DWG

COHSTD.BDR

0 1 2 3

ORIGINAL SCALE IN INCHES FOR REDUCED PLANS

REV NO	DESCRIPTION	APP'D	DATE

CH2M HILL
7600 West Tidwell Road, Suite 400
Houston Tx 77040
713.462.0161

Binkley & Barfield, Inc.
Consulting Engineers
1710 Seamist Drive Houston, Texas 77008

ALMEDA SIMS
SLUDGE PROCESSING FACILITY IMPROVEMENTS

GFS NO R-0298-04-3
FILE NO: 4289-2

ABBREVIATIONS

CITY OF HOUSTON
DEPARTMENT OF PUBLIC WORKS AND ENGINEERING
ENGINEERING, CONSTRUCTION AND REAL ESTATE GROUP

SECTION APPROVALS

WATER ENGINEERING — TRAFFIC AND SIGNAL ENGINEERING

7/1/97
WASTEWATER ENGINEERING — STREET & BRIDGE ENGINEERING

7/3/97
STORM SEWER ENGINEERING — CONSTRUCTION

OTHER DEPARTMENTS

PLANNING AND DEVELOPMENT — SPONSOR DEPARTMENT

7/7/97
CITY ENGINEER — DATE

7-8-97
DIRECTOR OF PUBLIC WORKS AND ENGINEERING — DATE

SUBMITTED:
SCALE: NONE
DATE: JUNE 1997
SURVEY BY:
F B NO:

DESIGNED BY: KKS
DRAWN BY: AAA
DWG NO: G-02
SHEET NO 3 OF 56 SHEETS
CITY DWG NO: 33007

FILE DATE--OPERATOR: 04/22/97--DVB

GENERAL LEGEND

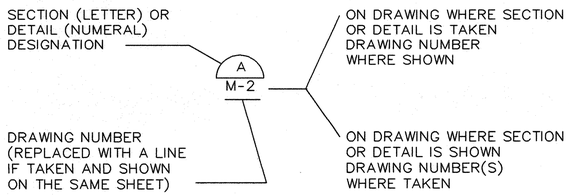

DETAIL AND SECTION DESIGNATION

1	99	SEE CIVIL AND YARD PIPING DRAWINGS
100	199	SEE ARCHITECTURAL DRAWINGS
200	299	SEE STRUCTURAL DRAWINGS
300	399	SEE MECHANICAL DRAWINGS
400	499	SEE ELECTRICAL DRAWINGS
500	599	SEE INSTRUMENTATION AND CONTROL DRAWINGS

STANDARD DETAIL DESIGNATION

GENERAL NOTES:

1. FACILITIES ARE SHOWN HEAVY LINED. SCREENING IS USED IN ORDER TO CLARIFY DRAWINGS. FOR EXAMPLE, STRUCTURES ARE SCREENED ON MECHANICAL DRAWINGS TO HIGH-LITE PIPING AND EQUIPMENT.
2. DEMOLITION WORK IS SHOWN BY SHOWING FACILITIES TO BE REMOVED CROSS HATCHED.
3. "FLOOR LINE" REFERS TO TOP OF CONCRETE SLABS. FINISH FLOORING IS INSTALLED ABOVE THE FLOOR LINE. FOR DEPRESSED FLOORS AND CURBS, SEE STRUCTURAL DRAWINGS.
4. REPETITIVE FEATURES ARE NOT DRAWN IN THEIR ENTIRETY AND SHALL BE COMPLETELY PROVIDED AS IF DRAWN IN FULL.
5. AT SOUND INSULATED WALLS, FULL HEIGHT PARTITIONS SHALL BE SEALED BOTH SIDES WITH ACOUSTIC SEALANT; TOP, BOTTOM, INTERSECTIONS, DOOR FRAMES, GLAZED OPENING FRAMES AND OTHER PENETRATIONS.
6. LINE OF EXISTING GRADES, AS SHOWN ON THE BUILDING ELEVATIONS AND SECTIONS ARE APPROXIMATE. THEY ARE AT THE BUILDING FACE, OR ON THE SECTION END EXCEPT AS NOTED.
7. VERIFY ALL ROUGH-IN DIMENSIONS FOR EQUIPMENT PROVIDED IN THIS CONTRACT, OR BY OTHERS.
8. REFER TO ARCHITECTURAL, STRUCTURAL, MECHANICAL, ELECTRICAL AND OTHER CATEGORIES OF DRAWINGS FOR ADDITIONAL NOTES.
9. VERIFY SIZE AND LOCATION OF, AND PROVIDE: ALL OPENINGS THROUGH FLOORS AND WALLS, ACCESS DOORS, FURRING, CURBS, ANCHORS AND INSERTS. PROVIDE ALL BASES, BLOCKING REQUIRED FOR ACCESSORIES, MECHANICAL, ELECTRICAL AND OTHER EQUIPMENT.

SEAL: 6/30/97
STATE OF TEXAS
H. J. KJELLBERG
38055
REGISTERED PROFESSIONAL ENGINEER

CADD DWG FILE NO: 64300/G03.DWG

COHSTD.BDR

0 1 2 3 ORIGINAL SCALE IN INCHES FOR REDUCED PLANS

CIVIL LEGEND

SYMBOL	LEGEND
⊗ 200.0	PROPOSED SPOT ELEVATION
X 200.8	EXISTING SPOT ELEVATION
— — —	MATCH LINE
——R/W——	RIGHT-OF-WAY
——100——	EXISTING CONTOUR (SHOWN SCREENED)
——100——	PROPOSED FOOT CONTOUR (SHOWN BOLD)
——P——	PROPERTY LINE
——℄——	CENTERLINE
	TO BE REMOVED
	GRAVEL OR RIPRAP SURFACE
	DEDUCT ALTERNATES
—X—X—	FENCE
—●—●—	SILT FENCE
——→···→····	DRAINAGE DIRECTIONAL ARROWS
B-1	PROPOSED TEST BORING LOCATION
TB1	EXISTING TEST BORING LOCATION
—— — ——	SLOPE BREAK
——●——●——	PIPE TO BE ABANDONED
N10000 E10000	CONSTRUCTION COORDINATE
4:1 (2%)	SLOPE DIRECTION AND MAGNITUDE
	COORDINATE GRID MARK
PP	POWER POLE
CB-1	CATCH BASIN
MH-1	MANHOLE
OE	OVERHEAD ELECTRICAL
UE	UNDERGROUND ELECTRICAL
EPB	ELECTRICAL PULL BOX
EMH	ELECTRICAL MANHOLE

NOTE:
SCREENED SYMBOLS INDICATE EXISTING.

ARCHITECTURAL LEGEND/STRUCTURAL LEGEND

SYMBOL	LEGEND
	INDICATES PAIR OF DOORS *INDICATES ACTIVE DOOR
DIRECTION SHOWN 1 A-1	INTERIOR WALL ELEVATION
1	COLUMN GRID LINE NUMBER
L-1 OIA	TYPE LOUVER
W-1 OIA	WINDOW TAG
S-2A	TYPE SIGN
100	ROOM NUMBER
A	DOOR DESIGNATION
	CONCRETE OR PRECAST
	CMU (PLAN)
	CMU (SECTION)
	BATT INSULATION
	STEEL STUD WALL (PLAN)
	GYPSUM WALLBOARD
	PLYWOOD
	STEEL OR ALUM AS INDICATED
	WOOD, FINISHED
	WOOD, ROUGH CONTINUOUS
	WOOD, ROUGH NON-CONTINUOUS
	GROUND SURFACE
	COMPACTED GRANULAR FILL
	CONTROL JOINT
	EXPANSION JOINT
	GRATING SPAN
	GROUT
	DIRECTION SHOWN
	GUARDRAILS & HANDRAILS
WALL F. EXT "X"	FIRE EXTINGUISHER "X"=NO. IN SPECIFICATIONS
	CHECKERED PLATE
110.50 110.50 7	SPOT ELEVATION / WALL TYPE
W27x84 (24'-0")	STD. AISC ROLLED SHAPE OF W27x84 AT EL 24'-0"

SYMBOL	LEGEND
W21x55 (1")	STD. AISC ROLLED SHAPE OF W21x55 WITH 1 IN. UPWARD CAMBER
W18x35 V=20K	STD. AISC ROLLED SHAPE OF W18x35 WITH 20 KIPS BEAM END SHEAR
W14x22–10	STD. AISC ROLLED SHAPE OF W14x22 WITH 10 HEADED SHEAR CONNECTORS EQUALLY SPACED
W21x50–10/6/12 BEAM BEAM	STD. AISC ROLLED SHAPE OF W21X50 WITH 28 HEADED SHEAR CONNECTORS EQUALLY SPACED FROM L TO R AS 10 CONNECTORS 6 CONNECTORS/12 CONNECTORS
VB1	VERTICAL BRACE MARK
VCB1	VERTICAL CROSS BRACE MARK
VKB1	VERTICAL "K" BRACE MARK
6"	SLAB DEPRESSION AND AMOUNT
1050'–0"	DATUM ELEVATION
45°00'00"	ANGLE IN DEGREES, MINUTES AND SECONDS

L	STEEL ANGLE	@	AT
JL	STEEL ANGLES BACK TO BACK	&	AND
I	STD. AISC ROLLED W SHAPE	X	BY
C	STD. AISC ROLLED CHANNEL	℄	CENTER LINE
O	STD. AISC STEEL PIPE	Ø	DIAMETER
□	STD. AISC STR TUBING	%	PERCENT
		PL	PLATE
		#	NUMBER (BAR SIZE)
		ф	SQUARE

REV NO	DESCRIPTION	APP'D	DATE

CH2M HILL
7600 West Tidwell Road, Suite 400
Houston Tx 77040
713.462.0161

Binkley & Barfield, Inc.
Consulting Engineers
1710 Seamist Drive Houston, Texas 77008

ALMEDA SIMS
SLUDGE PROCESSING FACILITY IMPROVEMENTS

GFS NO R-0298-04-3
FILE NO: 4289-2

GENERAL CIVIL, STRUCTURAL, AND ARCHITECTURAL LEGEND

CITY OF HOUSTON
DEPARTMENT OF PUBLIC WORKS AND ENGINEERING
ENGINEERING, CONSTRUCTION AND REAL ESTATE GROUP

SECTION APPROVALS

WATER ENGINEERING	TRAFFIC AND SIGNAL ENGINEERING
WASTEWATER ENGINEERING 7/1/97	STREET & BRIDGE ENGINEERING
STORM SEWER ENGINEERING	CONSTRUCTION 7/3/97

OTHER DEPARTMENTS

PLANNING AND DEVELOPMENT	SPONSOR DEPARTMENT

CITY ENGINEER — DATE 7/1/97

DIRECTOR OF PUBLIC WORKS AND ENGINEERING — DATE 7-8-97

SUBMITTED:
SCALE: NONE
DATE: JUNE 1997
SURVEY BY:
F B NO:

DESIGNED BY: HJK
DRAWN BY: AAA
DWG NO: G-03
SHEET NO 4 OF 56 SHEETS

CITY DWG NO: 33007

FILE DATE--OPERATOR: 06/25/97--AAA

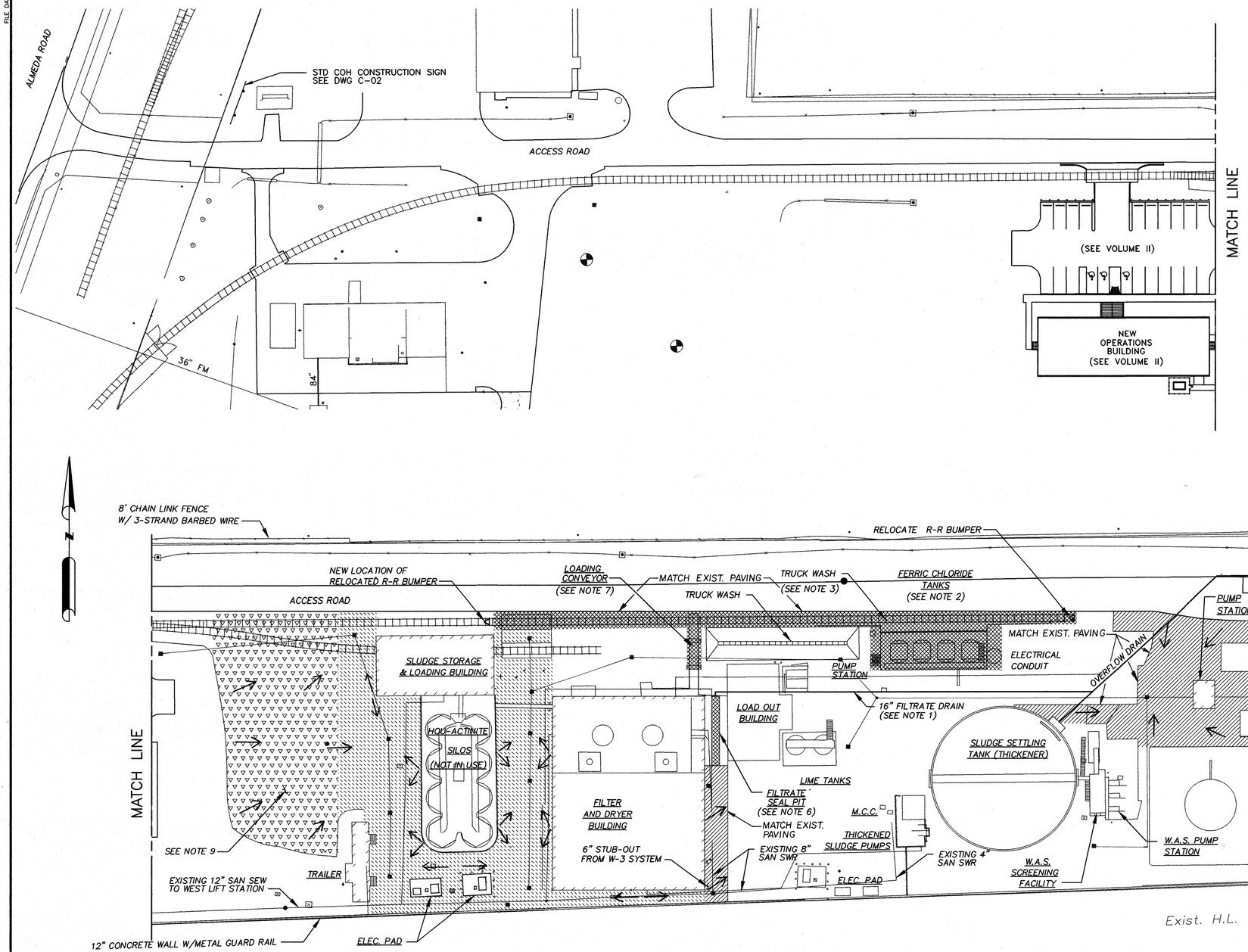

SITE PLAN

NOTE:

1. 16" RUBBER GASKETED CONCRETE PIPE FILTRATE LINE IS TO BE EXAMINED BY VIDEO AND CLEANED FROM FILTRATE SEAL PIT TO CONNECTION WITH THICKENER OVERFLOW DRAIN. CONTRACTOR SHALL ISOLATE 16" LINE TO AERATION BASIN BY INSERTING AN INFLATABLE PLUG IN LINE AT AERATION BASIN CONNECTION. WORK SHALL BE PERFORMED DURING A SCHEDULED SLUDGE FACILITY SHUTDOWN. CONTRACTOR SHALL SUBMIT A DETAILED WORK PLAN TO THE ENGINEER FOR APPROVAL AT LEAST 30 DAYS PRIOR TO SHUTDOWN. WORK SHALL BE SCHEDULED TO BE COMPLETED IN A MAXIMUM OF FIVE DAYS.
2. CONTRACTOR SHALL DEMOLISH THE FERRIC CHLORIDE STORAGE TANKS, FOUNDATIONS AND ALL ASSOCIATED PIPING AND APPURTENANCES TO TWO FT. BELOW SURROUNDING GRADE LEVEL. HE SHALL COMPACT AT LEAST A 12" LAYER STABILIZED SUBGRADE AND INSTALL 8 INCHES OF CONCRETE REINFORCED WITH #6 BARS @ 18 INCHES BOTH WAYS TOP, AND BE SLOPED TO DRAIN. EPOXY GROUT SHALL BE APPLIED TO EDGES OF EXISTING CONCRETE PRIOR TO INSTALLING AN EXPANSION JOINT ALL CONNECTIONS TO EXISTING PAVING SHALL USE COH STANDARD PAVING HEADER, DWG NO 02771-01.
3. CONTRACTOR SHALL REMOVE R.R. TRACK AND CROSSINGS AS SHOWN. REPAIR WITH CEMENT STABILIZED SAND AND 8 INCHES CONCRETE WITH REINFORCEMENT AS NOTED IN NOTE 2.

LEGEND

- AREA 1 TO BE DEMOLISHED AND REPLACED WITH 8" CONCRETE PAVING. (845 S.Y.)
- AREA 2 ASPHALT REMOVAL AND INSTALLATION OF NEW 8" CONCRETE PAVING. (2590 S.Y.)
- AREA 3 ASPHALT REMOVAL AND INSTALLATION OF NEW 8" BASE COURSE AND NEW 2" ASPHALT PAVING. (2175 S.Y.)
- AREA 4 INSTALLATION OF SPOT PATCH AND 2" ASPHALT OVERLAY TOP COAT PAVING. (1485 S.Y.)
- GENERAL DIRECTION OF NEW PAVING SLOPE.

CONTINUED

—WARNING NOTE—

OVERHEAD POWER LINES MAY EXIST ON THE PROPERTY WE HAVE NOT ATTEMPTED TO MARK ALL OF THOSE LINES SINCE THEY ARE CLEARLY VISIBLE, BUT THE CONTRACTOR SHALL LOCATE THEM PRIOR TO BEGINNING ANY CONSTRUCTION. TEXAS LAW, SECTION 752, HEALTH & SAFETY CODE, FORBIDS ALL ACTIVITIES IN WHICH PERSONS OR THINGS MAY COME WITHIN SIX (6) FEET OF LIVE OVERHEAD HIGH VOLTAGE LINES. CONTRACTORS ARE LEGALLY RESPONSIBLE FOR SAFETY OF CONSTRUCTION WORKERS UNDER THIS LAW. THIS LAW CARRIES BOTH CRIMINAL AND CIVIL LIABILITY. TO ARRANGE FOR LINES TO BE TURNED OFF OR MOVED AT CONTRACTOR'S EXPENSE CALL HL&P AT 228-7400.

4. ALL CONCRETE AREAS THAT ARE TO BE DEMOLISHED AND RECEIVE CONCRETE PAVEMENT SHALL BE SAW CUT AND DRILLED AT 12 INCHES ON CENTER TO RECEIVE A #6 BAR EPOXIED IN PLACE AND TIED TO BARS AS REQUIRED BY NOTE 2. BARS SHALL BE 18" AND EMBEDED MINIMUM 6"
5. ELEVATIONS USED IN THIS CONTRACT ARE TAKEN FROM THE ORIGINAL PLANT DRAWINGS AND ARE USED ONLY FOR REFERENCE WITHIN THE PLANT. THE ACTUAL ELEVATIONS MAY VARY DUE TO SUBSIDENCE.
6. CONTRACTOR SHALL DEMOLISH THE FILTRATE SEAL PIT PIPING, MOTORS, BLOWERS AND APPURTENANCES. SEE DRAWINGS M-18 AND M-19.
7. CONTRACTOR SHALL DEMOLISH AND REMOVE THE ENTIRE LOADING CONVEYOR, SUPPORTS, STAIRS, CONCRETE SUPPORTS TO 2 FEET BELOW GRADE AND OTHER APPURTENANCES LEAVING FIRST SUPPORT AS INDICATED AND RESTORING HANDRAIL.
8. EXISTING ASPHALT PAVING AND BASE MATERIAL TO BE REMOVED. SOFT SPOTS IN SUBBASE SHOULD BE REPAIRED PRIOR TO PLACING NEW 8" CONCRETE. CONCRETE SHALL BE REINFORCED WITH #6 BARS @ 18 INCHES BOTH WAYS TOP AND BE SLOPED TO DRAIN.
9. EXISTING BASE MATERIAL REMOVED DURING CONSTRUCTION OF AREA 3 SHALL BE USED TO SPOT PATCH IN AREA 4 PRIOR TO THE INSTALLATION OF AN ASPHALT OVERLAY.
10. SLOPE ALL NEW PAVING TO EXISTING DRAIN. ADJUST DRAIN INLETS AS REQUIRED.

CH2M HILL
7600 West Tidwell Road, Suite 400
Houston Tx 77040
713.462.0161

Binkley & Barfield, Inc.
Consulting Engineers
1710 Seamist Drive Houston, Texas 77008

ALMEDA SIMS
SLUDGE PROCESSING FACILITY IMPROVEMENTS

GFS NO R-0298-04-3
FILE NO: 4289-2

OVERALL SITE PLAN

CITY OF HOUSTON
DEPARTMENT OF PUBLIC WORKS AND ENGINEERING
ENGINEERING, CONSTRUCTION AND REAL ESTATE GROUP

SECTION APPROVALS

WATER ENGINEERING	TRAFFIC AND SIGNAL ENGINEERING
WASTEWATER ENGINEERING 7/1/97	STREET & BRIDGE ENGINEERING
STORM SEWER ENGINEERING	CONSTRUCTION 7/3/97

OTHER DEPARTMENTS

PLANNING AND DEVELOPMENT	SPONSOR DEPARTMENT

CITY ENGINEER — DATE 7/7/97

DIRECTOR OF PUBLIC WORKS AND ENGINEERING — DATE 7-8-97

SEAL: H. J. KJELLBERG 38055 REGISTERED PROFESSIONAL ENGINEER STATE OF TEXAS 6/30/97

REV NO	DESCRIPTION	APP'D	DATE

SUBMITTED:
SCALE: 1" = 40'-0"
DATE: JUNE 1997
SURVEY BY:
F B NO:

DESIGNED BY: HJK
DRAWN BY: AAA
DWG NO: C-01
SHEET NO 5 OF 56 SHEETS
CITY DWG NO: 33007

CADD DWG FILE NO: 64300/C01.DWG

COHSTD.BDR

0 1 2 3 ORIGINAL SCALE IN INCHES FOR REDUCED PLANS

FILE DATE--OPERATOR: 04/22/97--DVB

NOTES:

1. 2' x 2" x 4" SUPPORTS FASTENED WITH ½"ϕ x 3½" BUTTON HEAD CARRIAGE BOLTS, NUTS AND FLAT WASHERS.
2. 4" x 4" POSTS FASTENED TO SIGN WITH ½"ϕ x 5½" BUTTON HEAD CARRIAGE BOLTS, NUTS AND FLAT WASHERS.

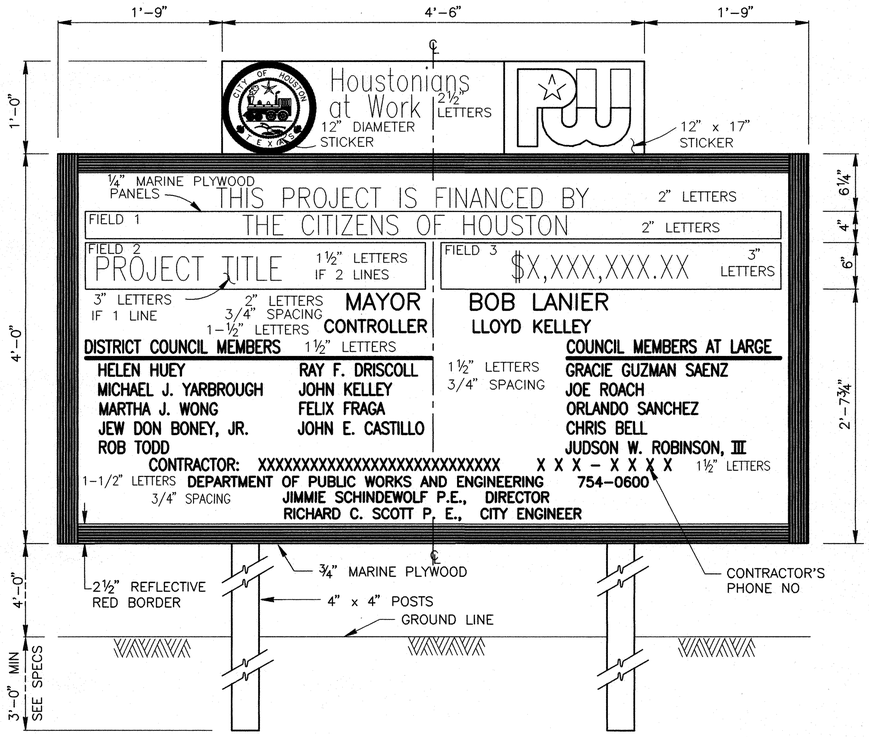

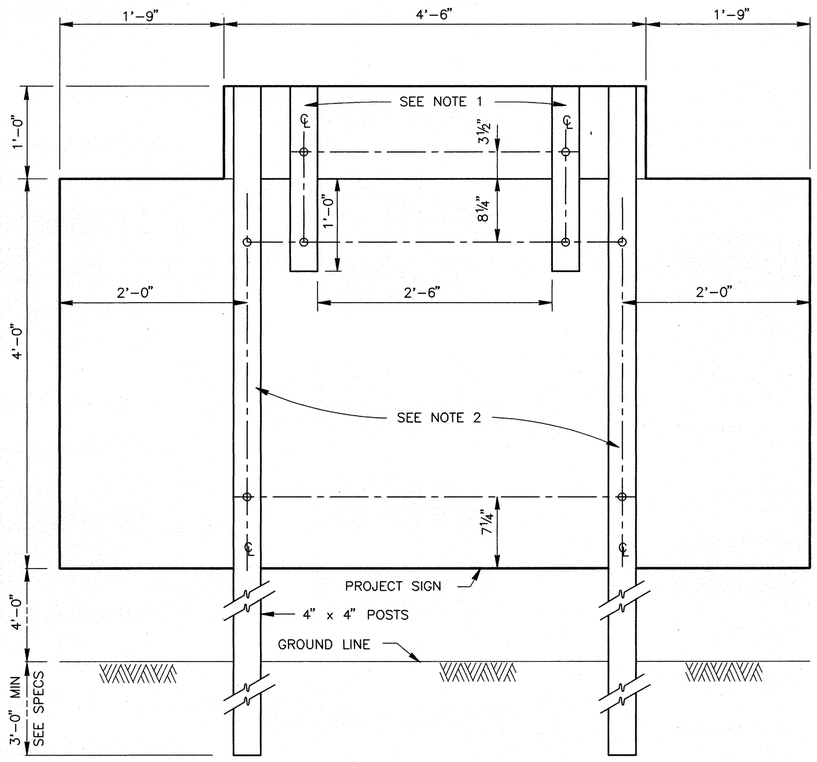

CH2M HILL
7600 West Tidwell Road, Suite 400
Houston Tx 77040
713.462.0161

Binkley & Barfield, Inc.
Consulting Engineers
1710 Seamist Drive Houston, Texas 77008

ALMEDA SIMS
SLUDGE PROCESSING FACILITY IMPROVEMENTS

GFS NO R-0298-04-3
FILE NO: 4289-2

STANDARD CONSTRUCTION SIGN DETAIL

CITY OF HOUSTON
DEPARTMENT OF PUBLIC WORKS AND ENGINEERING
ENGINEERING, CONSTRUCTION AND REAL ESTATE GROUP

SECTION APPROVALS

WATER ENGINEERING	TRAFFIC AND SIGNAL ENGINEERING
WASTEWATER ENGINEERING 7/1/97	STREET & BRIDGE ENGINEERING
STORM SEWER ENGINEERING	CONSTRUCTION 7/8/97

OTHER DEPARTMENTS

PLANNING AND DEVELOPMENT	SPONSOR DEPARTMENT

CITY ENGINEER — DATE 7/1/97

DIRECTOR OF PUBLIC WORKS AND ENGINEERING — DATE 7-8-97

SEAL: H. J. KJELLBERG 38055 REGISTERED PROFESSIONAL ENGINEER STATE OF TEXAS — 4/30/97

CADD DWG FILE NO: 64300/C02.DWG

COHSTD.BDR

0 1 2 3 ORIGINAL SCALE IN INCHES FOR REDUCED PLANS

REV NO	DESCRIPTION	APP'D	DATE

SUBMITTED:
SCALE: NONE
DATE: JUNE 1997
SURVEY BY:
F B NO:

DESIGNED BY: HJK
DRAWN BY: AAA
DWG NO: C-02
SHEET NO 6 OF 56 SHEETS
CITY DWG NO: 33007

FILE DATE—OPERATOR: 06/24/97—AA

INSTRUMENT IDENTIFICATION

EXAMPLE SYMBOLS

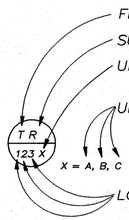

EXAMPLE

LOOP 810 CONSISTS OF THREE LEVEL INDICATORS: LI810A, LI810B, LI810C

FIELD MOUNTED INSTRUMENT

REAR-OF-PANEL MOUNTED INSTRUMENT

PANEL MOUNTED INSTRUMENT

MOTOR CONTROL CENTER MOUNTED INSTRUMENT

SPECIAL CASES

ON AND OFF EVENT LIGHTS

OPENED AND CLOSED POSITION LIGHTS

OPENED AND CLOSED POSITION SWITCHES

ON-OFF HAND SWITCH. MAINTAINED CONTACT SWITCH (CONTROLLED DEVICE WILL RESTART ON RETURN OF POWER AFTER POWER FAILURE).

STOP-START HAND SWITCH. MOMENTARY CONTACT SWITCH (CONTROLLED DEVICE WILL NOT RESTART ON RETURN OF POWER AFTER POWER FAILURE).

ELECTRIC ACTUATOR WITH INTEGRAL OPEN-STOP-CLOSE MOMENTARY CONTACT CONTROL SWITCH.

ELECTRIC ACTUATOR WITH INTEGRAL MULTIVARIABLE INDICATOR/SWITCH OPERATOR STATION. SEE I-DWGS. FOR DEFINITION OF MULTIPLE VARIABLES.

DIGITAL SYSTEM SYMBOLS

SHARED DISPLAY ON PLC OPERATOR INTERFACE

FUNCTION IMPLEMENTED BY PROGRAMMABLE LOGIC CONTROLLER

INSTRUMENT SOCIETY OF AMERICA TABLE

LETTER	FIRST LETTER (S)		SUCCEEDING LETTERS		
	PROCESS OR INITIATING VARIABLE	MODIFIER	READOUT OR PASSIVE FUNCTION	OUTPUT FUNCTION	MODIFIER
A	ANALYSIS (+)		ALARM		
B	BURNER FLAME		USERS CHOICE (+)	USERS CHOICE (+)	USERS CHOICE (+)
C	CONDUCTIVITY			CONTROL	
D	DENSITY (S.G)	DIFFERENTIAL			
E	VOLTAGE		PRIMARY ELEMENT		
F	FLOW RATE	RATIO			
G	GAUGE		GLASS	GATE	
H	HAND (MANUAL)				HIGH
I	CURRENT		INDICATE		
J	POWER	SCAN			
K	TIME OR SCHEDULE			CONTROL STATION	
L	LEVEL		LIGHT (PILOT)		LOW
M	MOTION				MIDDLE
N	USERS CHOICE (+)		USERS CHOICE (+)	USERS CHOICE (+)	USERS CHOICE (+)
O	USERS CHOICE (+)		ORIFICE		
P	PRESSURE (OR VACUUM)		POINT (TEST CONNECTION)		
Q	QUANTITY OR EVENT(+)	INTEGRATE	INTEGRATE		
R			RECORD OR PRINT		
S	SPEED OR FREQUENCY	SAFETY		SWITCH	
T	TEMPERATURE			TRANSMIT	
U	MULTIVARIABLE (+)		MULTIFUNCTION (+)	MULTIFUNCTION (+)	MULTIFUNCTION (+)
V	VISCOSITY			VALVE OR DAMPER	
W	WEIGHT OR FORCE		WELL		
X	UNCLASSIFIED (+)		UNCLASSIFIED (+)	UNCLASSIFIED (+)	UNCLASSIFIED (+)
Y	USERS CHOICE (+)			RELAY OR COMPUTE (+)	
Z	POSITION			DRIVE, ACTUATE OR UNCLASSIFIED FINAL CONTROL ELEMENT	

(+)WHEN USED, EXPLANATION IS SHOWN ADJACENT TO INSTRUMENT SYMBOL. SEE ABBREVIATIONS AND LETTER SYMBOLS.

TRANSDUCERS

A	ANALOG	I	CURRENT
D	DIGITAL	P	PNEUMATIC
E	VOLTAGE	PF	PULSE FREQUENCY
F	FREQUENCY	PD	PULSE DURATION
H	HYDRAULIC	R	RESISTANCE

EXAMPLE:

CURRENT TO PNEUMATIC TRANSDUCER (BACK OF PANEL, IN A FLOW LOOP)

SELF CONTAINED VALVE & EQUIPMENT TAG NUMBERS

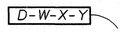

D:
- ARV = AIR RELEASE VALVE
- AVRV = AIR AND VACUUM RELEASE VALVE
- AC = AIR COOLER
- E = EJECTOR
- FCV = FLOW CONTROL VALVE
- G = GATE
- LCV = LEVEL CONTROL VALVE
- M = MECHANICAL EQUIPMENT
- P = PUMP
- PCV = PRESSURE CONTROL VALVE
- PSE = RUPTURE DISK
- PSV = PRESSURE RELIEF VALVE
- SL = STOP LOG
- T = TANK
- TCV = TEMPERATURE CONTROL VALVE

W = UNIT PROCESS NUMBER
X = LOOP NUMBER
Y = UNIT NUMBER

GENERAL NOTES

1. COMPONENTS AND PANELS SHOWN WITH A DIAMOND (◆) ARE TO BE PROVIDED UNDER SECTION INSTRUMENTATION AND CONTROLS.
2. COMPONENTS AND PANELS SHOWN WITH A DOUBLE ASTERISK (**) ARE TO BE PROVIDED AS PART OF A PACKAGE SYSTEM
3. THIS IS A STANDARD LEGEND. THEREFORE, NOT ALL OF THIS INFORMATION MAY BE USED ON THIS PROJECT.

LINE LEGEND

- PROCESS (CLOSED CONDUIT, DASHED LINE INDICATES ALTERNATE FLOW STREAM)
- PROCESS (OPEN CHANNEL)
- ANALOG SIGNAL (4 TO 20 mAdc, ETC.)
- DISCRETE SIGNAL (ON/OFF, ETC.)
- PD — PULSE DURATION SIGNAL
- PF — PULSE FREQUENCY SIGNAL
- PNEUMATIC SIGNAL
- FILLED SYSTEM SIGNAL
- P — POWER (480V, 3Ø, ETC)
- BUILDING OR FACILITY BOUNDARY
- PARALLELING LINES (PARENTHETICAL NUMBER INDICATES THE NUMBER OF SIGNALS REPRESENTED)
- CONNECTING LINES
- NON-CONNECTING LINES

INTERFACE SYMBOLS

= PROCESS INTERFACE

= SIGNAL INTERFACE

A = INTERFACE NUMBER
D = DESTINATION DRAWING NO.
S = SOURCE DRAWING NO.

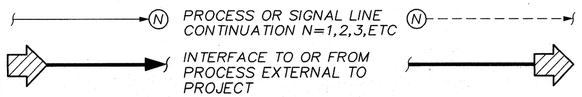

ABBREVIATIONS & LETTER SYMBOLS

ACK	ACKNOWLEDGE
AC	ALTERNATING CURRENT
ADP	AREA DISPLAY PANEL
ALT	ALTERNATE
AM	AUTO-MANUAL
CL_2 etc.	CHLORINE (TYPICAL: USE STANDARD CHEMICAL ELEMENT ABBREVIATION)
CMP	CENTRAL MONITORING PANEL
COD	CHEMICAL OXYGEN DEMAND
CP-X	CONTROL PANEL NO. X
CPU	CENTRAL PROCESSING UNIT
DC	DIRECT CURRENT
DIAP	DIAPHRAGM
DO	DISSOLVED OXYGEN
DOE	DELAY ON ENERGIZATION
DODE	DELAY ON DE-ENERGIZATION
FCL_2	FREE CHLORINE RESIDUAL
FOR	FORWARD-OFF-REVERSE
FOS	FAST-OFF-SLOW
FP-W-X	FIELD PANEL NO. WX (W = UNIT PROCESS NUMBER X = PANEL NUMBER)
HOA	HAND-OFF-AUTO
HOR	HAND-OFF-REMOTE
ISR	INTRINSICALLY SAFE RELAY
LOH	LOW-OFF-HIGH
LOR	LOW-OFF-REMOTE
LR	LOCAL-REMOTE
MA	MANUAL-AUTO
MC	MODULATE-CLOSE
MCC-X	MOTOR CONTROL CENTER NO. X
MS	MOTOR STARTER
MSC	MANUFACTURER'S SUPPLIED CABLE
MTD	MOTOR TEMPERATURE DETECTOR
OC	OPEN-CLOSE (D)
OCR	OPEN-CLOSE-REMOTE
OCA	OPEN-CLOSE-AUTO
OIU	OPERATOR INTERFACE UNIT
OO	ON-OFF
OOA	ON-OFF-AUTO
OOR	ON-OFF-REMOTE
OSC	OPEN-STOP-CLOSE
PLC	PROGRAMMABLE LOGIC CONTROLLER
ROT	ROTAMETER
SS	START-STOP
UPS	UNINTERRUPTIBLE POWER SUPPLY
VIB	VIBRATION
√‾	SQUARE ROOT
AVG	AVERAGE
1:1	REPEAT OR BOOST
>	SELECT HIGHEST SIGNAL
<	SELECT LOWEST SIGNAL

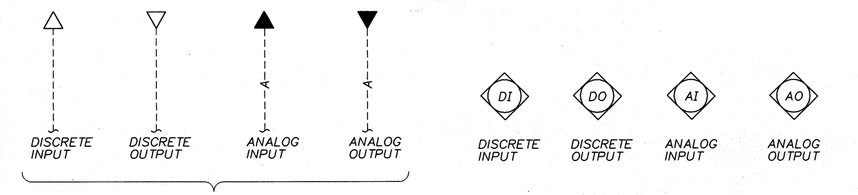

PLC INPUT/OUTPUT CONVENTION ON P&ID'S

PLC INPUT/OUTPUT CONVENTION ON CONTROL DIAGRAMS

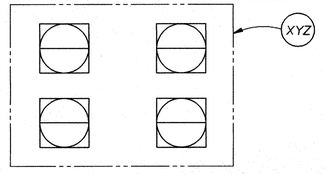

REV NO	DESCRIPTION	APP'D	DATE

CH2M HILL
7600 West Tidwell Road, Suite 400
Houston Tx 77040
713.462.0161

Binkley & Barfield, Inc.
Consulting Engineers
1710 Seamist Drive Houston, Texas 77008

ALMEDA SIMS
SLUDGE PROCESSING FACILITY IMPROVEMENTS

GFS NO R-0298-04-3
FILE NO: 4289-2

PROCESS AND INSTRUMENTATION
I & C LEGEND

CITY OF HOUSTON
DEPARTMENT OF PUBLIC WORKS AND ENGINEERING
ENGINEERING, CONSTRUCTION AND REAL ESTATE GROUP

SECTION APPROVALS

WATER ENGINEERING	TRAFFIC AND SIGNAL ENGINEERING
WASTEWATER ENGINEERING 7/1/97	STREET & BRIDGE ENGINEERING
STORM SEWER ENGINEERING	CONSTRUCTION 7/2/97

OTHER DEPARTMENTS

PLANNING AND DEVELOPMENT	SPONSOR DEPARTMENT

CITY ENGINEER — DATE 7/7/97

DIRECTOR OF PUBLIC WORKS AND ENGINEERING — DATE 7-8-97

SEAL — STATE OF TEXAS — H. J. KJELLBERG — 38055 — REGISTERED PROFESSIONAL ENGINEER — 6/30/97

CADD DWG FILE NO: 64300/101.DWG

COHSTD.BDR

0 1 2 3 ORIGINAL SCALE IN INCHES FOR REDUCED PLANS

SUBMITTED:
SCALE: NONE
DATE: JUNE 1997
SURVEY BY:
F B NO:

DESIGNED BY: MATTHEWS
DRAWN BY: DAVIS
DWG NO: I-01
SHEET NO 7 OF 56 SHEETS
CITY DWG NO: 33007

FILE DATE-OPERATOR: 06/24/97-MA

VALVE SYMBOLS

- GATE
- KNIFE GATE
- BUTTERFLY
- GLOBE
- BALL
- VEE- BALL
- PLUG
- SEAT PORT ECCENTRIC PLUG
- DIAPHRAGM
- PINCH
- NEEDLE
- SWING CHECK
- BALL CHECK
- SAMPLE
- MUD
- PRESSURE RELIEF
- AIR AND / OR VACUUM RELEASE
- REGULATED SIDE PRESSURE CONTROL
- MULTI-PORT VALVES (ECCENTRIC PLUG VALVE SHOWN. FOR OTHER VALVE TYPES, SEE APPROPRIATE VALVE SYMBOL SHOWN AT THE LEFT.)
  * ARROWS INDICATE THE FLOW PATTERN.
  * SEAT PORTS ARE IMPLIED BY THE INDICATED FLOW PATTERN.
- DOUBLE DISK SWING CHECK
- TELESCOPING

GATE SYMBOLS

- SLUICE
- BUTTERFLY
- FLAP
- FABRICATED SLIDE
- SHEAR

PRIMARY ELEMENT SYMBOLS

- PARSHALL FLUME
- WEIR
- ORIFICE
- FLOW TUBE
- PITOT-STATIC
- VORTEX METER
- ROTAMETER
- ULTRASONIC FLOWMETER (INLINE)
- ELECTROMAGNETIC FLOWMETER
- PROPELLER OR TURBINE METER
- DENSITY METER (X: N = NUCLEAR, O = OPTICAL, U = ULTRASONIC)
- ULTRASONIC FLOWMETER (CLAMP-ON)
- LEVEL (ULTRASONIC)
- LEVEL (BUBBLER TUBE)
- LEVEL (FLOAT)

ACTUATOR SYMBOLS

- P Z XX — PNEUMATIC W/POSITIONER
- P S XX — PNEUMATIC W/SOLENOID
- E XX — ELECTRIC
- E Z XX — ELECTRIC W/POSITIONER
- EH XX — ELECTROHYDRAULIC
- H XX — HYDRAULIC
- P B XX — PNEUMATIC WITH VOLUME BOOSTER
- S — SOLENOID
- MANUAL

NOTE:
ON LOSS OF PRIMARY POWER (PNEUMATIC, ELECTRICAL OR HYDRAULIC)
XX: FO =FAIL OPEN
FC =FAIL CLOSED
FLP=FAIL TO LAST POSITION

MISCELLANEOUS SYMBOLS

- SIGHT GLASS
- DIAPHRAGM SEAL
- BLIND FLANGE
- AIR GAP
- VENT TO ATMOSPHERE
- AERATOR
- SELF CONTAINED AIR SUPPLY
- SD D — COMPOSITE SAMPLER (DIPPER TYPE)
- SS — COMPOSITE SAMPLER (SUCTION TYPE)
- ON-TD X-SEC — "ON" TIME DELAY B "ON" X-SEC. AFTER A "ON". INSTANT "OFF".
- OFF-TD X-SEC — "OFF TIME DELAY B "OFF" X-SEC. AFTER A "OFF" INSTANT "ON"
- I — OR — I — INTERLOCK. SEE CONTROL DIAGRAMS
- A, B, S, R, C — MEMORY ELEMENT S= SET , R= RESET
- XP — PURGE SET X: W = WATER, A = AIR — SEE
- XX — AIR SET XX= SUPPLY PRESSURE IN PSIG.
- FILTER/ REGULATOR/ GAUGE SET
- GRINDER
- FILTER
- MIXER
- PULSATION DAMPENER
- PLUG
- W — WHITE FLOURESCENT LIGHT
- FLEX HOSE W/STANDARD NPT FITTINGS
- FLEX HOSE WITH QUICK CONNECTION
- 120V — 120 VOLT, 60 HZ POWER
- 480V — 480 VOLT, 60 HZ POWER
- ANNULAR DIAPHRAGM SEAL
- RUPTURE DISK
- PIG INSERT POINT
- OR — PIG CATCH POINT
- OR — MIXER
- M — ELECTRIC MOTOR
- VFD — VARIABLE FREQUENCY DRIVE
- PRESSURE GAUGE
- A, B, AND, C — LOGIC ELEMENT: IF A AND NOT B THEN C
- A, B, OR, C — LOGIC ELEMENT: IF A OR B THEN C
- S, R — ON/OFF RELAY. INPUT IS CONNECTED TO OUTPUT WHEN SWITCHING SIGNAL IS PRESENT.
- S, R — SWITCHING SIGNAL — SWITCHING RELAY. INPUT WITH DOT IS CONNECTED TO OUTPUT WHEM SWITCHING SIGNAL IS PRESENT
  OTHER INPUT IS CONNECTED TO OUTPUT WHEN SWITCHING SIGNAL IS NOT PRESENT.
- F — FLUSHING CONNECTION — HOSE ADAPTOR
- S — SEAL WATER SET
- S — SEAL WATER SET
- CALIBRATION TUBE
- AIR CHAMBER
- HOSE BARB
- RECEPTACLE
- RECEPTACLE
- POLYMER MIXER

FRONT-OF-PANEL SYMBOLS

- INDICATING LIGHT
- SELECTOR SWITCH
- PUSHBUTTON

PUMP AND COMPRESSOR SYMBOLS

NOTE: XX: AS = ADJUSTABLE SPEED
CS-1 = CONSTANT SPEED (SINGLE SPEED)
CS-2 = CONSTANT SPEED (TWO SPEED)

- CENTRIFUGAL PUMP (DRY PIT) XX
- CENTRIFUGAL WET PIT PUMP OR TURBINE PUMP XX
- CHEMICAL FEED PUMP XX
- DIAPHRAGM PUMP XX
- GEAR PUMP OR BLOWER (POSITIVE DISPLACEMENT) XX
- PISTON PUMP XX
- PROGRESSIVE CAVITY PUMP XX
- SUBMERSIBLE SUMP PUMP XX
- COMPRESSOR (CENTRIFUGAL) XX BLOWER OR TURBINE
- COMPRESSOR (PISTON) XX
- EJECTOR
- GEAR PUMP

FLOW STREAM IDENTIFICATION

ALP	AIR, LOW PRESSURE PROCESS
BYP	BYPASS
CNP	CONCENTRATED POLYMER
D	SANITARY DRAIN
DEC	DECANT
DLP	DILUTED POLYMER
DR	PROCESS DRAIN
DPS	DILUTED POLYMER SOLUTION
FD	FLOOR DRAIN
FE	FINAL EFFLUENT
FO	FUEL OIL
FTD	FILTER DRAIN
ML	MIXED LIQUOR
NPW	NONPOTABLE CITY WATER (BACKFLOW PREVENTED)
OF	OVERFLOW
PD	PUMP DISCHARGE
PRS	PROCESS SLUDGE
QC	QUICK CONNECT
RAS	RETURN ACTIVATED SLUDGE
RS	RAW SEWAGE
SBS	SODIUM BISULFITE SOLUTION
SE	SECONDARY EFFLUENT
V	VENT
WAS	WASTE ACTIVATED SLUDGE
W-1	POTABLE CITY WATER
W-3	EFFLUENT WATER

NOTE:
THIS IS A STD F.S.I. NOT ALL FLOW STREAM I.D'S SHOWN ARE USED ON THIS PROJECT.

NEW AND EXISTING EQUIPMENT CONVENTION

NEW = _____

EXISTING = _____

EXAMPLE:

NEW RAW SEWAGE LINE — RS

EXISTING RAW SEWAGE LINE — RS

SEAL: H. J. KJELLBERG, 38055, REGISTERED PROFESSIONAL ENGINEER, STATE OF TEXAS — 6/24/97

CADD DWG FILE NO: 64300/102.DWG

COHSTD.BDR

0 1 2 3 ORIGINAL SCALE IN INCHES FOR REDUCED PLANS

REV NO	DESCRIPTION	APP'D	DATE

CH2M HILL
7600 West Tidwell Road, Suite 400
Houston Tx 77040
713.462.0161

Binkley & Barfield, Inc.
Consulting Engineers
1710 Seamist Drive Houston, Texas 77008

ALMEDA SIMS
SLUDGE PROCESSING FACILITY IMPROVEMENTS

GFS NO R-0298-04-3
FILE NO: 4289-2

PROCESS AND INSTRUMENTATION I & C LEGEND

CITY OF HOUSTON
DEPARTMENT OF PUBLIC WORKS AND ENGINEERING
ENGINEERING, CONSTRUCTION AND REAL ESTATE GROUP

SECTION APPROVALS

WATER ENGINEERING	TRAFFIC AND SIGNAL ENGINEERING
7/1/97	
WASTEWATER ENGINEERING	STREET & BRIDGE ENGINEERING
	6/6/97
STORM SEWER ENGINEERING	CONSTRUCTION

OTHER DEPARTMENTS

PLANNING AND DEVELOPMENT	SPONSOR DEPARTMENT

CITY ENGINEER — DATE 7/7/97

DIRECTOR OF PUBLIC WORKS AND ENGINEERING — DATE 7-8-97

SUBMITTED:
SCALE: NONE
DATE: JUNE
SURVEY BY:
F B NO:

DESIGNED BY: MATTHEWS
DRAWN BY: DAVIS
DWG NO: I-02
SHEET NO 8 OF 56 SHEETS

CITY DWG NO: 33007

FILE DATE--OPERATOR: 06/24/97-AAA

HS 2204A — HS 2204B
FULL LENGTH TRIP CORD ON EACH SIDE OF PRESS

BELT DRIVE
- HS 2203A START
- HS 2203B STOP
- SI 2203 0-100%
- SC 2203 SPEED
- HS 2203C ALARM SILENCE

CONTROL SYSTEM
- HS 2200A HOA CONTROL MODE
- HS 2200B AUTO-START
- HS 2200C AUTO-STOP
- HS 2200D START FEED
- HS 2200F SYSTEM RESET
- QL 2200I PRESS READY
- QL 2200G HAND CONTROL MODE
- QL 2200H AUTO CONTROL MODE
- HS 2200E EMERGENCY SHUTDOWN
- QL 2200F EMERGENCY SHUTDOWN

HYDRAULIC PUMP
- HS 2201A START
- HS 2201B STOP
- QL 2201C RUN

SLUDGE FEED DIVERSION VALVE
- HS 2202 PRESS/DIVERT

SLUDGE FEED GPM
- FI 1205

SECOND STAGE POLYMER DILUTION
- FI 3200 FLOW RATE BASED ON PUMP CTRL.
- SC 3200 0-100% OUTPUT

SLUDGE FEED PUMP
- SC 1200 SPEED
- HS 1200 SS
- QL 1200 RUN
- QL 1200 FAULT

LOCAL FILTER PRESS CONTROL PANEL
(SUPPLIED W/BFP-2200)
LOCATED AT PRESS

UA 2200 ALARM HORN
UA 2200 ALARM BEACON
UL 2200

INDIVIDUAL STATUS SLUDGE CAKE CONVEYORS "A" & "E"
I-05 — 10
UA 2200 ALARM HORN
480V

BELT DRIVE
- QL 2203A BELT MISALIGNED
- QL 2203B BELT BROKEN
- QL 2203C RUN
- KI 1200 ELAPSE TIME

SLUDGE FEED PUMP
- FIT 1205 RUN GALLONS SLUDGE FEED TOTALIZER
- KI 2203 ELAPSE TIME

CONTROL SYSTEM
- QL 2200 LOW WASHWATER PRESSURE
- QL 1205 NO CAKE/HIGH SLUDGE
- HS 2200G ALARM SILENCE
- HS 2200 OO POWER
- QL 2200 POWER

SECOND STAGE POLYMER DILUTION UNIT
- QL 3200A LOW POLY. FLOW & WATER PRES. ALARM
- QL 3200B RUN STATUS

CONVEYORS SEE NOTE 3
- QL 5000A RUN CONVEYOR "A"
- QL 5000E RUN CONVEYOR "E"

HYDRAULIC PUMP
- QL 2201A PRES. FAULT
- QL 2201B RUN

- HS 6100 DRYER-1/DRYER-2
- QL X-X-X RUN CONVEYOR

CONTROL SYSTEM
- QL 2200A EMERGENCY SHUTDOWN
- PLC SYSTEM CONTROLLER
- QL 2200B HAND CONTROL MODE
- QL 2200C AUTO CONTROL MODE
- QL 2200E PRESS READY
- QL 2200D ON PRE-WET CYCLE
- QL 2200F ON WASHDOWN CYCLE

MAIN FILTER PRESS CONTROL PANEL
(SUPPLIED W/BFP-2200)
LOCATED IN CONTROL ROOM

SLUDGE FEED PUMP
- QL 1202 RUN
- QL 1202 POWER
- QL 1202 FAULT
- HS 1202A LOR
- HS 1202B SS
- SC 1202
- SI 1202

SEAL: H. J. KJELLBERG 38055 REGISTERED PROFESSIONAL ENGINEER, STATE OF TEXAS — 6/30/97

CADD DWG FILE NO: 64300/103.DWG

COHSTD.BDR

0 1 2 3 ORIGINAL SCALE IN INCHES FOR REDUCED PLANS

DEWATERED SLUDGE TO FILTER CAKE BELT CONVEYOR "D" 5400

W3 WATER FROM PLANT WATER SYSTEM MIN. 80 GPM/90 PSIG — 1-06 — 2 — 1 1/2"-NPW
W3 WATER FROM PLANT WATER SYSTEM MIN.100 PSIG — 1-06 — 3 — 1"-NPW
DILUTED POLYMER FROM USE TANK 3220 — 1-04 — 4 — 2"-DLP

PSL 2200
PCV 2220
HV 2220
HV 2220A
VMP 2202
SEE NOTE 8
ZY 2202
ZV 2202

BFP-2200 VFD M
1 1/2"-SLIPFIT WASHWATER CONN
6"-150# INLET
2"-SCH. 40
3"-SCH. 40
4"-SCH. 40

6" FD — 6" — 10" — 10" — 6" FD — 5 — I-05
TO FILTRATE DISCHARGE CHAMBER

SYSTEM RUN
FLOW RATE & CONTROL
COMMON ALARM
ON/OFF CONTROL
120V P

PM-3200 POLYMER MIXER
FLEX HOSE 6' X 1 1/2"
2"-DPS
HV 3250

PSL 2201 — PSH 2201 — M — **HPU-2201** HYDRAULIC POWER UNIT (SUPPLIED WITH BFP-2200)
10' FLEX HOSE (FURNISHED)

PI 3200M 0-30 PSIG
PN 3200M
HV 3200B
HV 3200A

BFP-2200 BELT FILTER PRESS

REMOVABLE SPOOLS SEE NOTE: 2

PDU-3200 SECOND STAGE POLYMER DILUTION UNIT
- QL 3200 ON POWER
- HS 3200 OO POWER
- HS 3200 DE ALARM
- QL 3200 DIL. WATER LOW FLOW
- QL 3200 POLYMER LOW FLOW
- QL 3200 ON CONTROL
- HS 3200 LOR CONTROL
- SC 3200 OUTPUT
- FI 3200 FLOW RATE BASED ON PUMP CTRL.
- PI 3200 0-180 DILUTION WATER
- PSL 3200 SET @40 PSI DILUTION WATER
- PI 3200 0-180 MIXING CHAMBER
- FI 3200 ROT DILUTION WATER
- FSL 3200 THERMAL POLYMER

OFF TO 30 SEC
VFD — P — 480V SEE NOTE 6
PSH 1203 SET @ 28 PSIG
PI 1203 0-30 PSIG
HV 1203
PN 1203 DIAP. 6"
HV 1207
HV 1206
120V
6" PRS
4"
FT 1205 MAGNETIC FLOW METER
FSL 1201 SET @ 50 GPM
SFP-1200 SLUDGE FEED PUMP
PSE 1204 SET @ 50 PSIG
HV 1204
HV 1205
SLUDGE FEED FROM SLUDGE HOLDING TANK SEE NOTE: 1 — 1 — I-05
120V

NOTES:

1. THIS P&ID IS TYPICAL FOR THREE ADDITIONAL DEWATERING SYSTEMS. THE EQUIPMENT AND INSTRUMENT TAG NUMBERS CHANGE TO 2300,2400 & 2600 SERIES NUMBERS PER SYSTEM.
2. PIPE SPOOLS SHALL BE PROVIDED THAT ARE THE SAME DIMENSION AS THE MIXER SPOOL.
3. THE BFP-2300 & BFP-2400 MAIN PANELS SHALL BE PROVIDED WITH TWO ADDITIONAL DEVICES.
   * A DRYER SELECT SWITCH.
   * A THIRD CONVEYOR STATUS LIGHT.
4. BELT FILTER PRESS POWER UNIT SHOWN AS HYDRAULIC, MAY BE PNEUMATIC.
5. THE CONTROL DIAGRAMS INDICATE ONLY THE GENERAL CHARACTERISTICS OF THE CONTROL SEQUENCES AND ALARMS. THE EQUIPMENT MANUFACTURER/SUPPLIER SHALL SUBMIT DETAILED INTERCONNECT WIRING DIAGRAMS FOR THE EQUIPMENT FURNISHED. THE CONTRACTOR SHALL COORDINATE THE WIRING BETWEEN EQUIPMENT, FIELD INSTRUMENT/LOCAL PANELS AND THE MOTOR CONTROL CENTERS.
6. SLUDGE FEED PUMP VFD LOCATED INSIDE BFP MAIN CONTROL PANEL.
7. SEE ELECTRICAL DRAWING NOS. E-06, E-07, E-08, AND E-09 FOR INSTRUMENTATION CONTROL AND POWER.
8. CONTRACTOR SHALL FIELD ROUTE MINIMUM 1/2" LINE TO EXISTING INSTRUMENTATION AIR SYSTEM OR SHALL HAVE NPT FITTING CRIMPED TO HOSE ONE SIDE TO MPT THE OTHER SHALL HAVE A SWIVEL FPT CONNECTION.
9. HOSE I.D. TO MATCH O.D. OF CONNECTING PIPE ON EQUIPMENT FURNISHED. HOSES TO POLYMER MIXER SHALL BE 6'-0" LONG. ALL OTHER CONNECTIING HOSES SHALL BE 2'-0" LONG.

REV NO	DESCRIPTION	APP'D	DATE

CH2M HILL
7600 West Tidwell Road, Suite 400
Houston Tx 77040
713.462.0161

Binkley & Barfield, Inc.
Consulting Engineers
1710 Seamist Drive Houston, Texas 77008

ALMEDA SIMS
SLUDGE PROCESSING FACILITY IMPROVEMENTS

GFS NO R-0298-04-3
FILE NO: 4289-2

PROCESS AND INSTRUMENTATION DIAGRAM TYPICAL BELT FILTER PRESS

CITY OF HOUSTON
DEPARTMENT OF PUBLIC WORKS AND ENGINEERING
ENGINEERING, CONSTRUCTION AND REAL ESTATE GROUP

SECTION APPROVALS

WATER ENGINEERING — TRAFFIC AND SIGNAL ENGINEERING
WASTEWATER ENGINEERING 7/1/97 — STREET & BRIDGE ENGINEERING
STORM SEWER ENGINEERING — CONSTRUCTION 7/2/97

OTHER DEPARTMENTS

PLANNING AND DEVELOPMENT — SPONSOR DEPARTMENT

CITY ENGINEER — DATE 7/7/97
DIRECTOR OF PUBLIC WORKS AND ENGINEERING — DATE 7-8-97

SUBMITTED:
SCALE: NONE
DATE: JUNE 1997
SURVEY BY:
F B NO:

DESIGNED BY: MATTHEWS
DRAWN BY: DAVIS
DWG NO: I-03
SHEET NO 9 OF 56 SHEETS

CITY DWG NO: 33007

FILE DATE--OPERATOR: 06/24/97-AAA

3" NPW W-3 WATER
I-06
3
2
3" CNP
HV 4400A
PI 4400A
PCV 4400A
1"
HV 3101
120V---P---
M

QL 3100A ON POWER
QL 3100A ON CONTROL
HS 3100A DISABLE/ENABLE POWER
HS 3100A HOA CONTROL
HS 3100A DE ALARM
SC 3100A OUTPUT
QL 4400A DIL. WATER LOW FLOW
FI 3100A FLOW RATE BASED ON PUMP CTRL.
QL 3100A POLYMER LOW FLOW
PI 4400A 0-180 DILUTION WATER
FI 4400A ROT DILUTION WATER
PSL 4400A SET @40 PSI DILUTION WATER
FSL 3100A THERMAL POLYMER
PI 3100A 0-180 MIXING CHAMBER

PDU-3100A
FIRST STAGE POLYMER DILUTION UNIT

PDU-3600
IDENTICAL TO EQUIPMENT AS SHOWN ON DWG. 103

PDU-3400
IDENTICAL TO EQUIPMENT AS SHOWN ON DWG. 103

PDU-3300
IDENTICAL TO EQUIPMENT AS SHOWN ON DWG. 103

DIL. POLYMER TO PDU-3200
I-03
4
2"-DLP
HV 3201
HV 3301
HV 3401
HV 3601
2"-DLP
2"-DLP
HV 4400C
2"
3"

NOTES:

1. THE CONTROL DIAGRAMS INDICATE ONLY GENERAL CHARACTERISTICS OF THE CONTROL SEQUENCES AND ALARMS. THE EQUIPMENT MANUFACTURER/SUPPLIER SHALL SUBMIT DETAILED INTERCONNECT WIRING DIAGRAMS FOR THE EQUIPMENT FURNISHED. THE CONTRACTOR SHALL COORDINATE THE WIRING BETWEEN EQUIPMENT, FIELD INSTRUMENT/LOCAL PANELS AND THE MOTOR CONTROL CENTERS.
2. FIRST STAGE POLYMER SYSTEM CONTROL PANEL, POLYMER AGING/USE TANK, AND ACCESSORIES TO BE SUPPLIED BY POLYMER DILUTION UNIT MANUFACTURER.
3. CONTRACTOR SHALL INSTALL NEW 3" GATE VALVE AND DISCONNECT FITTING ON EXISTING 3" CONCENTRATED POLYMER UNLOADING LINE.
4. SEE ELECTRICAL DRAWING E-07 FOR INSTRUMENTATION POWER AND CONTROL.
5. CONTRACTOR SHALL FIELD ROUTE MINIMUM 1/2" LINE TO EXISTING INSTRUMENT AIR SYSTEM.

FIRST STAGE POLYMER SYSTEM CONTROL PANEL
LOCATED IN POLYMER AREA

RUN — QL 3100A ON POWER — QL 3100 — HS 3100 ALARM SILENCE
ALARM — QL 3100A OO POWER — HS 3100
A — A — A — FIT 3100A GALLONS NEAT POLYMER FLOW TOTALIZER
START
HS 3211 OC — HS 3211 MA — HS 3211 SS — QL 3211 RUN — QL 3211 STOP
FIT 3100B GALLONS NEAT POLYMER FLOW TOTALIZER
PM3210
VENT
220V---P---M
QL 3210 — LSHH 3210 — ALARM "PDU" OFF — 12" — 18"
LSH 3210 — "PDU" ON — 12"
QL 3210 — LSL 3210
START — HS 3100
QL 3210
RUN — QL 3100B
ALARM — QL 3100B
QL 3220 — LSH 3220 — CLOSE VALVE — 10"
QL 3220 — LSL 3220 — OPEN VALVE — 16"
QL 3220 — LSLL 3220 — ALARM — 12"
HV 3220 — 3/4"
LV 3221 — LY 3221 — S P — FV 3221 — 4"
VENT
3" DLP

ALARM HORN — UA 3100
ALARM BEACON — UL 3100

TK-3210
POLYMER MIXING/ AGING TANK

TK-3220
POLYMER USE TANK

3" NPW W-3 WATER
I-06
3
2
3" CNP
HV 4400B
PI 4400B
PCV 4400B
1"
HV 3100
120V---P---
M

QL 3100B ON POWER
QL 3100B ON CONTROL
HS 3100B OO POWER
HS 3100B HOA CONTROL
HS 3100B DISABLE/ENABLE ALARM
SC 3100B OUTPUT
QL 4400B DIL. WATER LOW FLOW
FI 3100B FLOW RATE BASED ON PUMP CTRL.
QL 3100B POLYMER LOW FLOW
PI 4400B 0-180 DILUTION WATER
FI 4400B ROT DILUTION WATER
PSL 4400B SET @40 PSI DILUTION WATER
FSL 3100B THERMAL POLYMER
PI 3100B 0-180 MIXING CHAMBER

PDU-3100B
FIRST STAGE POLYMER DILUTION UNIT

HV 4400D
2"
3"
3" DLP

HV 3020E — 3" — SEE NOTE 3
CONCENTRATED POLYMER FROM EXISTING UNLOADING
HV 3020A
3" CNP
3"
VENT
3"
RECYCLE
2"
HV 3040E
CONCENTRATED POLYMER TANK (NOTE: 1)
HV 3020B
HV 3020
2"
3"
TK-3020

HV 3020F — NC
3" CNP

HV 3020C — 2" — NC — BYPASS
HV 3010A
3"
VENT
2" — RECYCLE
HV 3030E
CONCENTRATED POLYMER TANK (NOTE: 1)
HV 3010B
HV 3010C
2"
2" CNP
HV 3030D
HV 3040D
2"
BYPASS NC
2"
2"
3"
TK-3010
HV 3010
VCK 3030
VCK 3040
2"
HV 3030S
2"
PP-3030
CONCENTRATED POLYMER RECYCLE PUMP
HV 3040S
2"
PP-3040
CONCENTRATED POLYMER RECYCLE PUMP

CH2M HILL
7600 West Tidwell Road, Suite 400
Houston Tx 77040
713.462.0161

Binkley & Barfield, Inc.
Consulting Engineers
1710 Seamist Drive Houston, Texas 77008

ALMEDA SIMS
SLUDGE PROCESSING FACILITY IMPROVEMENTS

GFS NO R-0298-04-3
FILE NO: 4289-2

PROCESS AND INSTRUMENTATION DIAGRAM POLYMER SYSTEM

CITY OF HOUSTON
DEPARTMENT OF PUBLIC WORKS AND ENGINEERING
ENGINEERING, CONSTRUCTION AND REAL ESTATE GROUP

SECTION APPROVALS

WATER ENGINEERING
TRAFFIC AND SIGNAL ENGINEERING
WASTEWATER ENGINEERING — 7/1/97
STREET & BRIDGE ENGINEERING
STORM SEWER ENGINEERING
CONSTRUCTION — 7/2/97

OTHER DEPARTMENTS

PLANNING AND DEVELOPMENT
SPONSOR DEPARTMENT

CITY ENGINEER — 7/7/97 DATE
DIRECTOR OF PUBLIC WORKS AND ENGINEERING — 7-8-97 DATE

SEAL: STATE OF TEXAS — H. J. KJELLBERG — 38055 — REGISTERED PROFESSIONAL ENGINEER — 6/30/97

REV NO	DESCRIPTION	APP'D	DATE

SUBMITTED:
SCALE: NONE
DATE: JUNE 1997
SURVEY BY:
F B NO:

DESIGNED BY: MATTHEWS
DRAWN BY: DAVIS
DWG NO: I-04
SHEET NO 10 OF 56 SHEETS
CITY DWG NO: 33007

CADD DWG FILE NO: 64300/104.DWG
COHSTD.BDR
0 1 2 3 ORIGINAL SCALE IN INCHES FOR REDUCED PLANS

FILE DATE--OPERATOR: 06/24/97-AAA

CONSTANT HEAD TANK

SLUDGE HOLDING TANK

PROPOSED BLIND FLANGE (TYP.)

EXIST. 18" AIRLIFT CASING (TYP.)

6" 6" 6" 6" 6" 6"

6" 6" 6" 6"

18X10

HV 1000B

FULLY BONNETTED KNIFE GATE VALVE (TYP)

HV 1000A

10" KNIFE GATE

8X6

HV 1200S

8X6

HV 1300S

10X8 10X8

6" PRS

6" PRS

8X6

10"

HV 1400S

10X8

10" PRS

EXCESS SLUDGE DRAIN

SHUTDOWN AND INDIVIDUAL STATUS TO BFP-2200 — 10 I-03

SLUDGE FEED TO SFP-1200 — 1 I-03

5 I-03

6" PRS

10" FTD

SLUDGE FEED

BFP-2300
IDENTICAL TO EQUIPMENT AS SHOWN ON DWG. 103

BFP-2400
IDENTICAL TO EQUIPMENT AS SHOWN ON DWG. 103

BFP-2600
IDENTICAL TO EQUIPMENT AS SHOWN ON DWG. 103

6" PRS 10" FTD

6" PRS 8X6 10X8 HV 1600S 10" FTD

6" PRS 12"x10" 12" FTD

10" 12"x10" 12" FTD

14"x12" 14" FTD

10" FD 6" FD 6" FD 10" FTD
FOR FUTURE BFP-2100

10" FD 6" FD 6" FD 14"x10" 10" 10"x6" 10" FTD 10"x6"
FOR FUTURE BFP-2500

12" 16"x12" 16"x10"

12" FTD 12"x10"

16"x14" 14"

AIR RELEASE VALVE

FTD 16"

FILTRATE CHAMBER

NOTE: 2 NOTE: 3 NOTE: 4 NOTE: 5

SSL 5000A — P -- 120V

SSL 5000B — P -- 120V

SSL 5000C — P -- 120V

SSL 5000D — P -- 120V

SSL 5000E — P -- 120V

SSL 5000F — P -- 120V

CAKE CONVEYOR "A"

CAKE CONVEYOR "B"

CAKE CONVEYOR "C"

CAKE CONVEYOR "D"

CAKE CONVEYOR "E"

CAKE CONVEYOR "F"

HS 5010A — HS 5011A

HS 5010B — HS 5011B

HS 5010C — HS 5011C

HS 5010D — HS 5011D

HS 5010E — HS 5011E

HS 5010F — HS 5011F

FULL LENGTH TRIP CORD ON EACH SIDE OF CONVEYOR SEE NOTE 6

INTERLOCK TO EXIST. CONVEYOR MOTOR CONTROLS

CAKE CONVEYORS

NOTES:

1. THE CONTROL DIAGRAMS INDICATE ONLY THE GENERAL CHARACTERISTICS OF THE CONTROL SEQUENCES AND ALARMS. THE EQUIPMENT MANUFACTURER/SUPPLIER SHALL SUBMIT DETAILED INTERCONNECT WIRING DIAGRAMS FOR THE EQUIPMENT FURNISHED. THE CONTRACTOR SHALL COORDINATE THE WIRING BETWEEN EQUIPMENT, FIELD INSTRUMENT/LOCAL PANELS AND THE MOTOR CONTROL CENTERS.
2. INDIVIDUAL STATUS FROM ZERO SPEED SWITCHES-CONVEYORS "A"&"E".
3. INDIVIDUAL STATUS FROM ZERO SPEED SWITCHES-CONVEYORS "B","E"&"F".
4. INDIVIDUAL STATUS FROM ZERO SPEED SWITCHES-CONVEYORS "C","E"&"F".
5. INDIVIDUAL STATUS FROM ZERO SPEED SWITCHES-CONVEYORS "D"&"F".
6. TRIP CORD SYSTEM MAY BE DESIGNED WITH SINGLE SWITCH AND FULL PERIMETER CORD OR ACCORD AND SWITCH ON EACH SIDE OF CONVEYOR FROM PROPOSED HEAD AND TAIL PULLEY GUARDS.
7. SEE ELECTRICAL DRAWING E-10 FOR INSTRUMENTATION POWER AND CONTROL.
8. SEE SHEET I-03 FOR INSTRUMENT AND PROCESS REQUIREMENT OF BFP SLUDGE FED LINES.

CH2M HILL
7600 West Tidwell Road, Suite 400
Houston Tx 77040
713.462.0161

Binkley & Barfield, Inc.
Consulting Engineers
1710 Seamist Drive Houston, Texas 77008

ALMEDA SIMS
SLUDGE PROCESSING FACILITY IMPROVEMENTS

GFS NO R-0298-04-3
FILE NO: 4289-2

PROCESS AND INSTRUMENTATION DIAGRAM
SLUDGE FEED & CONVEYORS

CITY OF HOUSTON
DEPARTMENT OF PUBLIC WORKS AND ENGINEERING
ENGINEERING, CONSTRUCTION AND REAL ESTATE GROUP

SECTION APPROVALS

WATER ENGINEERING	TRAFFIC AND SIGNAL ENGINEERING
WASTEWATER ENGINEERING 7/1/97	STREET & BRIDGE ENGINEERING
STORM SEWER ENGINEERING	CONSTRUCTION Russell E. Main 7/3/97

OTHER DEPARTMENTS

PLANNING AND DEVELOPMENT	SPONSOR DEPARTMENT

CITY ENGINEER — DATE 7/7/97

DIRECTOR OF PUBLIC WORKS AND ENGINEERING — DATE 7-8-97

SEAL: H. J. KJELLBERG 38055 REGISTERED PROFESSIONAL ENGINEER STATE OF TEXAS 6/30/97

CADD DWG FILE NO: 64300/105.DWG

COHSTD.BDR

0 1 2 3 ORIGINAL SCALE IN INCHES FOR REDUCED PLANS

REV NO	DESCRIPTION	APP'D	DATE

SUBMITTED:
SCALE: NONE
DATE: JUNE 1997
SURVEY BY:
F B NO:

DESIGNED BY: MATTHEWS
DRAWN BY: DAVIS
DWG NO: I-05
SHEET NO 11 OF 56 SHEETS

CITY DWG NO: 33007

FILE DATE--OPERATOR: 06/24/97--AAA

NPW WATER TO PDU-3100A — I-04 — 3" (W-3)
NPW WATER TO PDU-3100B — I-04 — 3" (W-3)
NPW WATER TO PDU-3200 — I-03 — 1" (W-3)
NPW WATER TO BFP-2200 — I-03 — 1 1/2" — 2" NPW (W-3)

6" NON-POTABLE TO EXIST. SYSTEM

NON POTABLE TO EXIST. SYSTEM — 4" (W-3) — 4" NPW (W-3)

HV 3200

HV 2200 — HV 2200A — HOSE REEL 2200A — 1" — 1" — 1" — HV 2200H — PCV 2200

HV 2400H — PCV 2400 — HV 2400A — HOSE REEL 2400A — 1" NPW (W-3)

1 1/2" NPW — HV 2400

BFP-2400
IDENTICAL TO EQUIPMENT AS SHOWN ON DWG. 103

2" NPW (W-3) — 6" NPW (W-3)

HV 2600A — PCV 2600 — HV 2600H — HOSE REEL 2600A — 1" NPW

BFP-2600
IDENTICAL TO EQUIPMENT AS SHOWN ON DWG. 103

1 1/2"-NPW — HV 2600

LOCAL CONTROL PANEL
SUPPLIED WITH STRAINER LOCATED AT STRAINER

HS 4300 OC — ZL 4300 C — ZL 4300 O — KC 4300 TD CYCLE TIMER — HS 4300 HOA — QL 4300 RUN — P --- 480V

2" NPW (W-3) TO EXISTING SYSTEM

1" NPW — 4" NPW — HV 4316

6" NPW TO EXISTING SYSTEM

3" NPW (W-3) TO EXISTING LINE TO SLUDGE PUMPS AND WAS PUMPS

SEE NOTE 5

PCV 4315 — 3" NPW (W3) — HV 4315

3" NPW (W-3)

3" NPW (W-3)

BFP-2300
IDENTICAL TO EQUIPMENT AS SHOWN ON DWG. 103

HV 2300 — 1 1/2" NPW (W-3) — 2" NPW (W-3)

HOSE REEL 2300A — 1" NPW (W-3) — HV 2300A — PCV 2300 — HV 2300H

HV 4311 — 8" — HV 4312N — HV 4312W — 8" NPW (W-3) — HV 4312E — HV 4310S — PDSH 4300 — HV 4310D — M

8" — 8" — 8" — 8" — 8" — HV 4312S

6" NPW (W-3) — HV 4314 — 4" NPW (W-3) — PCV 4314

2" — E — P — FV 4310 — ZV 4310 — ZS 4310 O — ZS 4310 C — HV 4310

SEE NOTE 1

MAIN WATER STORAGE CONTROL PANEL
LOCATED ADJACENT TO AIR-GAP TANK

HS 4100A OC (W-3)
QL 4100A O (W-3)
LSH 4100A OFF
HS 4100A MA (W-3)
LSL 4100A (W-3)
HS 4100B MA (W-1)
LSLL 4100A (W-1) ON
QL 4100B O (W-1)
HS 4100B OC (W-1)
LIC 4100 A

3" NPW (W-3)

HV 3307 — HV 3308 — 1" NPW — 3/4" GLOBE VALVE WITH CROWS FOOT CONNECTION

HV 3300 — 1" NPW — **PDU 3300** IDENTICAL TO EQUIPMENT AS SHOWN ON DWG. I-03

HV 3400 — 1" NPW — **PDU 3400** IDENTICAL TO EQUIPMENT AS SHOWN ON DWG. I-03

HV 3600 — 1" NPW — **PDU 3600** IDENTICAL TO EQUIPMENT AS SHOWN ON DWG. I-03

3" NPW (W-3)

AUTOMATIC BACKWASH STRAINER
4300A
4300B
4300C

8" NPW (W-3)

HV 4202D — 8"x6

HV 4201D — 8"x6

EXISTING W-3 PUMP 4200D

TRIPLEX PUMP SYSTEM PACKAGE
4200A
4200B
4200C

P --- 480V

HV 4201S

HV 4202S — 8" NPW

6" NPW

(W-3) NON-POTABLE WATER — SEE NOTE 4

HV 4100D — S P — FV 4100B — EXISTING — HV 4101S

LY 4100B — LV 4100B — ZS 4100B O — SEE NOTE 2

(W-1) POTABLE CITY WATER — 6" (W-1)

LE 4100 ULTRASONIC

NPW WATER AIR-GAP TANK
4100

OFF — (W-3) ON — ((W-1) ON — 54" — 48" — 36"

HV 4100A — FV 4100A — 6"x4 — P S — 6"x4 — 6" (W-3)

ZS 4100A — LV 4100A — LY 4100A — HV 4101A

NOTES:

1. CONTRACTOR MAY REUSE EXISTING PANEL WITH EXISTING LEVEL SENSOR AND MODICON CONTROLLER. IF EXISTING PANEL IS REUSED CONTRACTOR SHALL UPGRADE CONTROLLER AND ANCILLARY HARDWARE AS REQUIRED AND MODIFY PROGRAMMING TO PROVIDE FOR ACTUATION OF EXISTING VALVE AND PROPOSED VALVE. CONTRACTOR SHALL PROVIDE 1 YEAR WARRANTY ON PANEL.
2. CONTRACTOR SHALL FIELD VERIFY REQUIREMENTS OF CONNECTIONS TO EXISTING VALVE.
3. THE CONTROL DIAGRAMS INDICATE ONLY THE GENERAL CHARACTERISTICS OF THE CONTROL SEQUENCES AND ALARMS. THE EQUIPMENT MANUFACTURER/SUPPLIER SHALL SUBMIT DETAILED INTERCONNECT WIRING DIAGRAMS FOR THE EQUIPMENT FURNISHED. THE CONTRACTOR SHALL COORDINATE THE WIRING BETWEEN EQUIPMENT, FIELD INSTRUMENT/LOCAL PANELS AND THE MOTOR CONTROL CENTERS.
4. CONTRACTOR SHALL CONNECT PROPOSED 6" W3 LINE TO EXISTING 6" STUB-OUT AS SHOWN ON SHEET C-1.
5. CONNECT 3" PIPE TO EXISTING 3" LINE ADJACENT TO COLUMN H-7.

CH2M HILL
7600 West Tidwell Road, Suite 400
Houston Tx 77040
713.462.0161

Binkley & Barfield, Inc.
Consulting Engineers
1710 Seamist Drive Houston, Texas 77008

ALMEDA SIMS
SLUDGE PROCESSING FACILITY IMPROVEMENTS

GFS NO R-0298-04-3
FILE NO: 4289-2

P & ID
NON POTABLE PLANT WATER SYSTEM

CITY OF HOUSTON
DEPARTMENT OF PUBLIC WORKS AND ENGINEERING
ENGINEERING, CONSTRUCTION AND REAL ESTATE GROUP

SECTION APPROVALS

WATER ENGINEERING	TRAFFIC AND SIGNAL ENGINEERING
7/1/97	
WASTEWATER ENGINEERING	STREET & BRIDGE ENGINEERING
	7/8/97
STORM SEWER ENGINEERING	CONSTRUCTION

OTHER DEPARTMENTS

PLANNING AND DEVELOPMENT	SPONSOR DEPARTMENT
7/7/97	
CITY ENGINEER	DATE
7-8-97	
DIRECTOR OF PUBLIC WORKS AND ENGINEERING	DATE

SEAL: STATE OF TEXAS — H. J. KJELLBERG — 38055 — REGISTERED PROFESSIONAL ENGINEER — 6/30/97

CADD DWG FILE NO: 64300/106.DWG

COHSTD.BDR

0 1 2 3 ORIGINAL SCALE IN INCHES FOR REDUCED PLANS

REV NO	DESCRIPTION	APP'D	DATE

SUBMITTED:
SCALE: NONE
DATE: JUNE 1997
SURVEY BY:
F B NO:

DESIGNED BY: MATTHEWS
DRAWN BY: DAVIS
DWG NO: I-06
SHEET NO 12 OF 56 SHEETS
CITY DWG NO: 33007

FILE DATE--OPERATOR: 06/24/97-AAA

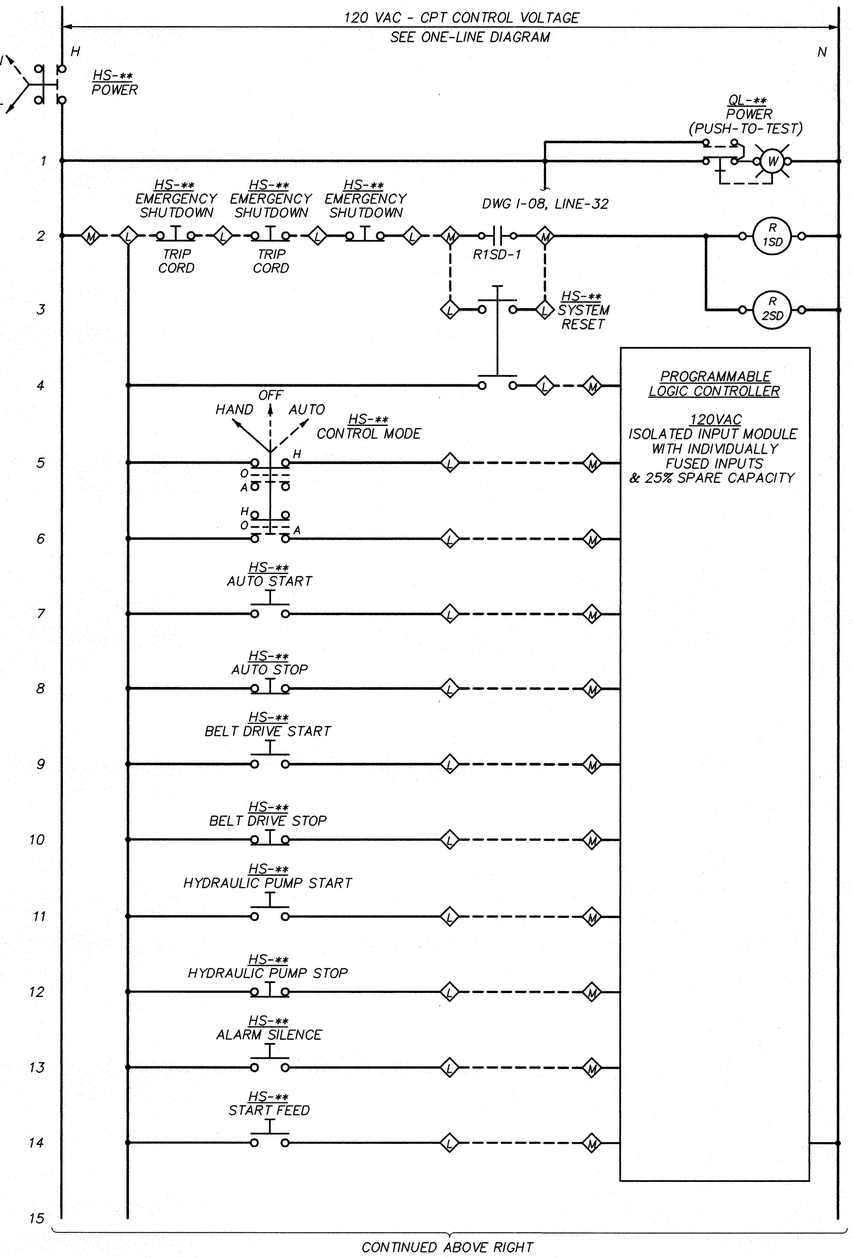

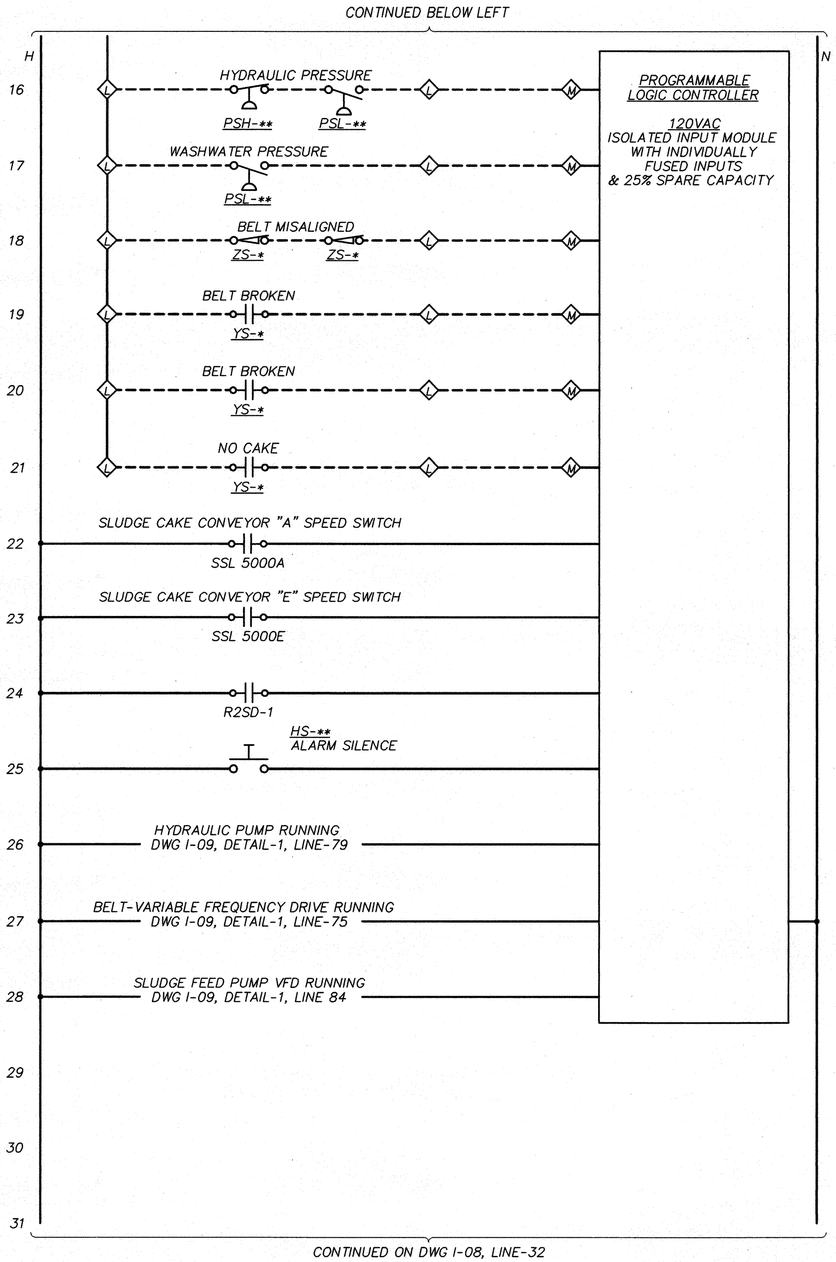

LEGEND

- FIELD WIRING
- PANEL OR MCC WIRING
- (M) MAIN PANEL TERMINAL
- (L) LOCAL PANEL TERMINAL

NOTES

1. THE CONTROL DIAGRAMS INDICATE ONLY THE GENERAL CHARACTERISTICS OF THE CONTROL SEQUENCES AND ALARMS THE EQUIPMENT MANUFACTURER/SUPPLIER SHALL SUBMIT DETAILED INTERCONNECT WIRING DIAGRAMS FOR THE EQUIPMENT FURNISHED THE CONTRACTOR SHALL COORDINATE THE WIRING BETWEEN EQUIPMENT, FIELD INSTRUMENT/LOCAL PANELS AND THE MOTOR CONTROL CENTERS.
2. INDIVIDUAL STATUS FROM ZERO SPEED SWITCHES - CONVEYORS "A" & "E".
3. INDIVIDUAL STATUS FROM ZERO SPEED SWITCHES - CONVEYORS "B", "E" & "F".
4. INDIVIDUAL STATUS FROM ZERO SPEED SWITCHES - CONVEYORS "C", "E" & "F".
5. INDIVIDUAL STATUS FROM ZERO SPEED SWITCHES - CONVEYORS "D" & "F".

1 BELT FILTER PRESS
MAIN & LOCAL CONTROL PANELS
(TYPICAL FOR FOUR UNITS)

CH2M HILL
7600 West Tidwell Road, Suite 400
Houston Tx 77040
713.462.0161

Binkley & Barfield, Inc.
Consulting Engineers
1710 Seamist Drive Houston, Texas 77008

ALMEDA SIMS
SLUDGE PROCESSING FACILITY IMPROVEMENTS

GFS NO R-0298-04-3
FILE NO: 4289-2

MISCELLANEOUS CONTROL SCHEMATIC BELT FILTER PRESS

CITY OF HOUSTON
DEPARTMENT OF PUBLIC WORKS AND ENGINEERING
ENGINEERING, CONSTRUCTION AND REAL ESTATE GROUP

SECTION APPROVALS

WATER ENGINEERING	TRAFFIC AND SIGNAL ENGINEERING
WASTEWATER ENGINEERING 7/1/97	STREET & BRIDGE ENGINEERING
STORM SEWER ENGINEERING	CONSTRUCTION 7/3/97

OTHER DEPARTMENTS

PLANNING AND DEVELOPMENT	SPONSOR DEPARTMENT

CITY ENGINEER — DATE 7/7/97
DIRECTOR OF PUBLIC WORKS AND ENGINEERING — DATE 7-8-97

SEAL: STATE OF TEXAS, H. J. KJELLBERG, 38055, REGISTERED PROFESSIONAL ENGINEER, 7/20/97

CADD DWG FILE NO: 64300/8070-107.DWG

COHSTD.BDR

0 1 2 3 ORIGINAL SCALE IN INCHES FOR REDUCED PLANS

REV NO	DESCRIPTION	APP'D	DATE

SUBMITTED:
SCALE: NONE
DATE: JUNE 1997
SURVEY BY:
F B NO:

DESIGNED BY: MATTHEWS
DRAWN BY: DAVIS
DWG NO: I-07
SHEET NO 13 OF 56 SHEETS

CITY DWG NO: 33007

FILE DATE-OPERATOR: 06/24/97-AAA

CONTINUED ON DWG I-07, LINE-31

H — DWG-107, LINE-1 — N

PROGRAMMABLE LOGIC CONTROLLER

120VAC ISOLATED OUTPUT MODULE WITH INDIVIDUALLY FUSED OUTPUTS & 25% SPARE CAPACITY

32	QL-** EMERGENCY SHUTDOWN (PUSH-TO-TEST)	A
33	QL-** HAND MODE (PUSH-TO-TEST)	W
34	QL-** AUTO MODE (PUSH-TO-TEST)	W
35	QL-** HYDRAULIC PRES. FAULT (PUSH-TO-TEST)	A
36	QL-** WASHWATER PRES. LOW (PUSH-TO-TEST)	A
37	QL-** BELT MISALIGNED (PUSH-TO-TEST)	A
38	QL-** BELT BROKEN (PUSH-TO-TEST)	A
39	QL-** NO CAKE (PUSH-TO-TEST)	A
40	QL-** SLUDGE PUMP RUN (PUSH-TO-TEST)	R
41	QL-** CAKE CONVEYOR RUN (PUSH-TO-TEST) SEE NOTE 3	R
42	QL-** HYDRAULIC PUMP RUN (PUSH-TO-TEST)	R
43	QL-** BELT DRIVE RUN (PUSH-TO-TEST)	R
44	QL-** PRE-WET CYCLE ON (PUSH-TO-TEST)	W
45	QL-** WASHDOWN CYCLE ON (PUSH-TO-TEST)	W
46	QL-** PRESS READY (PUSH-TO-TEST)	W
47		

CONTINUED ABOVE RIGHT

CONTINUED BELOW LEFT

H — N

PROGRAMMABLE LOGIC CONTROLLER

48	QL-** CAKE CONVEYOR RUN (PUSH-TO-TEST) SEE NOTE 3	R	
49	COMMON ALARM	M	QL-** POLYMER UNIT COMMON ALARM (PUSH-TO-TEST) A
50	SYSTEM RUN	M	POLYMER SYSTEM R 1 — 51, (68,DWG I-09)
51	R1-1		QL-** POLYMER SYSTEM RUN (PUSH-TO-TEST) R
52		M L	QL-** EMERGENCY SHUTDOWN (PUSH-TO-TEST) A — L M
53		M L	QL-** HAND MODE (PUSH-TO-TEST) W
54		M L	QL-** AUTO MODE (PUSH-TO-TEST) W
55		M L	QL-** HYDRAULIC PUMP RUN (PUSH-TO-TEST) R
56		M L	QL-** PRESS READY (PUSH-TO-TEST) W
57			ALARM HORN R 2 — (66,DWG I-09)
58			WASHWATER VALVE R 3 — (69,70,DWG I-09)
59			HYDRAULIC PUMP R 4 — (78,DWG I-09)
60			BELT DRIVE R 5 — (74,DWG I-09)
61			BELT PRESS READY R 6 — 63
62			BELT PRESS COMMON ALARM R 7 — 63
63	R6-1 R6-1		R7-1 R7-1

RELAY CONTACT LINE NO. REF. (TYP.), NO, NC

CONTINUED ON DWG I-09, DETAIL-1, LINE-64

LEGEND

- FIELD WIRING
- PANEL OR MCC WIRING
- M — MAIN PANEL TERMINAL
- L — LOCAL PANEL TERMINAL

NOTES

1. THE CONTROL DIAGRAMS INDICATE ONLY THE GENERAL CHARACTERISTICS OF THE CONTROL SEQUENCES AND ALARMS THE EQUIPMENT MANUFACTURER/SUPPLIER SHALL SUBMIT DETAILED INTERCONNECT WIRING DIAGRAMS FOR THE EQUIPMENT FURNISHED THE CONTRACTOR SHALL COORDINATE THE WIRING BETWEEN EQUIPMENT, FIELD INSTRUMENT/LOCAL PANELS AND THE MOTOR CONTROL CENTERS.
2. THIS P&ID IS TYPICAL FOR THE FOUR BFPs AND IS BASED ON BFP NO. 2200.
3. SLUDGE CAKE CONVEYOR RUN INDICATOR LIGHTS SHALL BE FURNISHED AS FOLLOWS.

A. SLUDGE CAKE CONVEYOR RUN INDICATOR LIGHTS FOR BFP NO. 2200 FROM ZERO SPEED SWITCHES - CONVEYORS "A" & "E".

B. SLUDGE CAKE CONVEYOR RUN INDICATOR LIGHTS FOR BFP NO. 2300 FROM ZERO SPEED SWITCHES - CONVEYORS "B", "E", & "F".

C. SLUDGE CAKE CONVEYOR RUN INDICATOR LIGHTS FOR BFP NO. 2400 FROM ZERO SPEED SWITCHES - CONVEYORS "C", "E", & "F".

D. SLUDGE CAKE CONVEYOR RUN INDICATOR LIGHTS FOR BFP NO. 2600 FROM ZERO SPEED SWITCHES - CONVEYORS "D" & "F".

1 BELT FILTER PRESS
MAIN & LOCAL CONTROL PANELS
(TYPICAL FOR FOUR UNITS)

CH2M HILL
7600 West Tidwell Road, Suite 400
Houston Tx 77040
713.462.0161

Binkley & Barfield, Inc.
Consulting Engineers
1710 Seamist Drive Houston, Texas 77008

ALMEDA SIMS
SLUDGE PROCESSING FACILITY IMPROVEMENTS

GFS NO R-0298-04-3
FILE NO: 4289-2

MISCELLANEOUS CONTROL SCHEMATIC BELT FILTER PRESS

CITY OF HOUSTON
DEPARTMENT OF PUBLIC WORKS AND ENGINEERING
ENGINEERING, CONSTRUCTION AND REAL ESTATE GROUP

SECTION APPROVALS

WATER ENGINEERING — TRAFFIC AND SIGNAL ENGINEERING
WASTEWATER ENGINEERING 7/1/97 — STREET & BRIDGE ENGINEERING
STORM SEWER ENGINEERING — CONSTRUCTION 7/2/97

OTHER DEPARTMENTS

PLANNING AND DEVELOPMENT — SPONSOR DEPARTMENT

CITY ENGINEER 7/7/97 DATE
DIRECTOR OF PUBLIC WORKS AND ENGINEERING 7-8-97 DATE

SEAL: H. J. KJELLBERG 38055 REGISTERED PROFESSIONAL ENGINEER STATE OF TEXAS 6/30/97

CADD DWG FILE NO: 64300/108.DWG

COHSTD.BDR

0 1 2 3 ORIGINAL SCALE IN INCHES FOR REDUCED PLANS

REV NO	DESCRIPTION	APP'D	DATE

SUBMITTED:
SCALE: NONE
DATE: JUNE 1997
SURVEY BY:
F B NO:

DESIGNED BY: MATTHEWS
DRAWN BY: DAVIS
DWG NO: I-08
SHEET NO 14 OF 56 SHEETS
CITY DWG NO: 33007

FILE DATE--OPERATOR: 06/24/97-MM

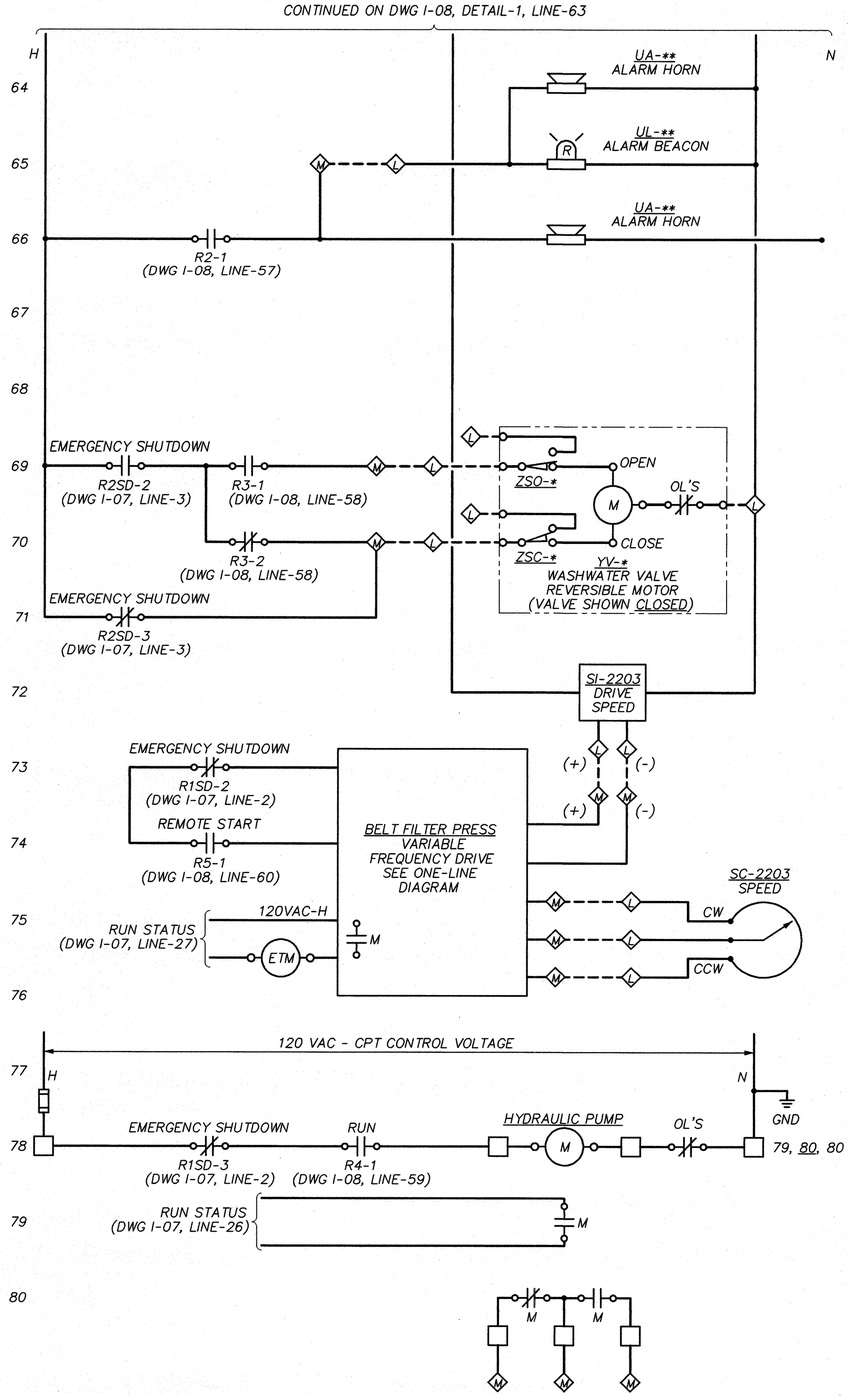

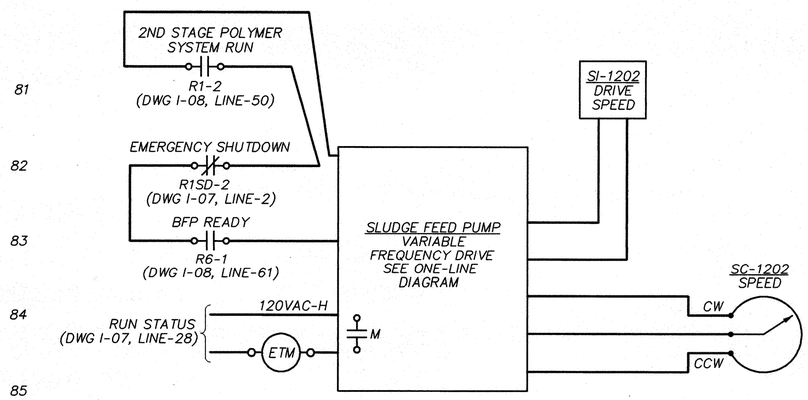

LEGEND

- FIELD WIRING
- PANEL OR MCC WIRING
- PANEL TERMINAL
- BELT FILTER PRESS MAIN PANEL TERMINAL
- BELT FILTER PRESS LOCAL PANEL TERMINAL
- STARTER TERMINAL

NOTES

1. WASH WATER VALVE CONTROL CIRCUIT SHOWN IN THE EMERGENCY SHUT DOWN CLOSED POSITION.
2. THE CONTROL DIAGRAMS INDICATE ONLY THE GENERAL CHARACTERISTICS OF THE CONTROL SEQUENCES AND ALARMS THE EQUIPMENT MANUFACTURER/SUPPLIER SHALL SUBMIT DETAILED INTERCONNECT WIRING DIAGRAMS FOR THE EQUIPMENT FURNISHED THE CONTRACTOR SHALL COORDINATE THE WIRING BETWEEN EQUIPMENT, FIELD INSTRUMENT/LOCAL PANELS AND THE MOTOR CONTROL CENTERS.
3. CONTRACTOR SHALL PROVIDE SPACE IN CONTROL PANEL FOR FUTURE INSTALLATION OF INDUSTRIAL LOCAL AREA NETWORK (ILAN) CONNECTION MODULE ON PLC.
4. DI AND DO MODULES ARE SHOWN FOR INFORMATION ONLY. NOT ALL I/O ARE SHOWN. REFER TO SPECIFICATIONS FOR COMPLETE I/O LIST.

1 BELT FILTER PRESS
MAIN & LOCAL CONTROL PANELS
(TYPICAL FOR FOUR UNITS)

SEAL: H. J. KJELLBERG, 38055, REGISTERED PROFESSIONAL ENGINEER, STATE OF TEXAS — 6/30/97

CADD DWG FILE NO: 64300/109.DWG

COHSTD.BDR

0 1 2 3 ORIGINAL SCALE IN INCHES FOR REDUCED PLANS

REV NO	DESCRIPTION	APP'D	DATE

CH2M HILL
7600 West Tidwell Road, Suite 400
Houston Tx 77040
713.462.0161

Binkley & Barfield, Inc.
Consulting Engineers
1710 Seamist Drive Houston, Texas 77008

ALMEDA SIMS
SLUDGE PROCESSING FACILITY
IMPROVEMENTS

GFS NO R-0298-04-3
FILE NO: 4289-2

MISCELLANEOUS
CONTROL SCHEMATIC
BELT FILTER PRESS

CITY OF HOUSTON
DEPARTMENT OF PUBLIC WORKS AND ENGINEERING
ENGINEERING, CONSTRUCTION AND REAL ESTATE GROUP

SECTION APPROVALS

WATER ENGINEERING
TRAFFIC AND SIGNAL ENGINEERING
7/1/97
WASTEWATER ENGINEERING
STREET & BRIDGE ENGINEERING
7/3/97
STORM SEWER ENGINEERING
CONSTRUCTION

OTHER DEPARTMENTS

PLANNING AND DEVELOPMENT
SPONSOR DEPARTMENT

CITY ENGINEER — 7/7/97 DATE
DIRECTOR OF PUBLIC WORKS AND ENGINEERING — 7-8-97 DATE

SUBMITTED:
SCALE: NONE
DATE: JUNE 1997
SURVEY BY:
F B NO:

DESIGNED BY: MATTHEWS
DRAWN BY: DAVIS
DWG NO: I-09
SHEET NO 15 OF 56 SHEETS
CITY DWG NO: 33007

FILE DATE--OPERATOR: 04/22/97--DVB

MECHANICAL LEGEND AND NOTES

GENERAL PIPING NOTES

1. LAY PIPE TO UNIFORM GRADE BETWEEN INDICATED ELEVATION POINTS.
2. SIZE OF FITTINGS SHOWN ON PLANS SHALL CORRESPOND TO ADJACENT STRAIGHT RUN OF PIPE, UNLESS OTHERWISE INDICATED. TYPE OF JOINT AND FITTING MATERIAL SHALL BE THE SAME AS SHOWN FOR ADJACENT STRAIGHT RUN OF PIPE.
3. LOCATION AND NUMBER OF PIPE HANGERS AND PIPE SUPPORTS SHOWN IS ONLY APPROXIMATE. FINAL SUPPORT REQUIREMENTS SHALL BE DETERMINED IN THE FIELD AND APPROVED BY THE ENGINEER PRIOR TO INSTALLATION. MAXIMUM SPACING SHALL BE AS SPECIFIED.
4. ALL JOINTS SHALL BE WATERTIGHT. STANDARD WALL PIPE DETAIL SHALL BE USED WHEREVER PIPING PASSES FROM A STRUCTURE TO BACKFILL.
5. ALL FLEXIBLE CONNECTORS OR FLANGED COUPLING ADAPTERS SHALL BE PROVIDED WITH THRUST TIES, OR ANCHORS, UNLESS OTHERWISE NOTED. THRUST PROTECTION SHALL BE ADEQUATE FOR PRESSURES SPECIFIED.
6. SYMBOLS, LEGENDS, AND PIPE USE IDENTIFICATIONS SHOWN SHALL BE FOLLOWED THROUGHOUT THE PLANS, WHEREVER APPLICABLE. ALL OF THE VARIOUS PIPING APPLICATIONS ARE NOT NECESSARILY USED IN THE PROJECT.
7. ALL BURIED PIPING SPECIFIED TO BE PRESSURE TESTED, EXCEPT FLANGED, WELDED, OR SCREWED PIPING, SHALL BE PROVIDED WITH MECHANICAL RESTRAINT JOINTS, UNLESS OTHERWISE NOTED.
8. NUMBER AND LOCATION OF UNIONS SHOWN ON PLANS IS ONLY APPROXIMATE. PROVIDE ALL UNIONS NECESSARY TO FACILITATE CONVENIENT REMOVAL OF VALVES AND MECHANICAL EQUIPMENT.

PIPE AND FITTING SYMBOLS

DOUBLE LINE	SINGLE LINE	
		EXISTING PIPE
		NEW PIPE
		EXISTING PIPE TO BE ABANDONED
		EXISTING PIPE TO BE REMOVED
		WELDED JOINT
		FLANGED JOINT
		FLANGED COUPLING ADAPTER
		FLEXIBLE COUPLING
		FLEXIBLE COUPLING WITH THRUST TIES
		STEEL BELLOWS EXP JOINT
		ELASTOMER BELLOWS EXP JOINT
		ELBOW UP
		ELBOW DOWN
		TEE UP
		TEE DOWN
		LATERAL UP

DOUBLE LINE	SINGLE LINE	
		LATERAL DOWN
		CONCENTRIC REDUCER
		ECCENTRIC REDUCER
		UNION
		CAP
		ANCHOR
		ELBOW, 90 DEGREE
		CROSS
		TEE
		ELBOW, 45 DEGREE
		LATERAL

NOTES:

1. ONLY FLANGED END CONNECTIONS ARE SHOWN HERE FOR DOUBLE LINE FITTINGS. FITTINGS WITH OTHER END PATTERNS ARE SHOWN SIMILARLY ON THE CONSTRUCTION DRAWINGS. ALSO SEE PIPING SPECIFICATIONS.
2. SYMBOLS SHOWN HERE FOR SINGLE LINE FITTINGS ARE GENERIC ONLY. REFER TO PIPING SPECIFICATIONS FOR SPECIFIC END CONNECTIONS FOR SINGLE LINE PIPE AND FITTINGS.
3. EXISTING PIPING AND EQUIPMENT ARE SHOWN LIGHT-LINED AND/OR SCREENED AND ARE NOTED AS EXISTING NEW PIPING AND EQUIPMENT IS SHOWN HEAVY-LINED

MISCELLANEOUS PIPING SYMBOLS

GAUGE WITH COCK

PS 26-1-2 — TYPICAL INSTRUMENT SYMBOL (SEE I&C LEGEND)

PLUMBING FIXTURE IDENTIFICATION

SSK	SERVICE SINK
SSH	SAFETY SHOWER

EXAMPLE: SSH-1

FIXTURE LEGEND

NO. IN SPECIFICATIONS

GENERAL NOTE

THIS IS A STANDARD LEGEND, THEREFORE, NOT ALL OF THE INFORMATION SHOWN MAY BE USED ON THIS PROJECT.

SEAL: STATE OF TEXAS, H. J. KJELLBERG, 38055, REGISTERED PROFESSIONAL ENGINEER, 4/30/97

CADD DWG FILE NO: 64300/M01.DWG

COHSTD.BDR

0 1 2 3 ORIGINAL SCALE IN INCHES FOR REDUCED PLANS

PIPING DESIGNATION

EXAMPLE: 6" RCY

6" — PIPE USE IDENTIFICATION LEGEND — RCY

NOMINAL PIPE DIAMETER

(SEE SHT I-1 FOR FLOW STREAM IDENTIFICAITON LEGEND)

VALVE SYMBOLS

- GATE
- BUTTERFLY
- GLOBE
- BALL
- SWING CHECK
- DOUBLE DISC CHECK
- BALL CHECK
- HOSE VALVE
- SAMPLE (S)
- MUD
- PRESSURE RELIEF
- AIR AND/OR VACUUM RELEASE
- PINCH
- REGULATED SIDE
- PRESSURE CONTROL
- SEAT PORT
- ECCENTRIC PLUG

VALVE DESIGNATIONS

MANUAL VALVES AND CHECK VALVES

1"-V300

SIZE OF VALVE

VALVE DESIGNATION

VALVE TYPE, SEE SPECIFICATIONS

BUILDING SERVICES SYMBOLS

- PS — PRESSURE SWITCH
- HOSE RACK (TYPE AS INDICATED)
- EYEWASH WITH SAFETY SHOWER (S)
- FE-X — FIRE EXTINGUISHER X = NO. IN SPECS
- XCO — X = F - FLOOR CLEANOUT, D - DECK CLEANOUT, W - WALL CLEANOUT
- FD-X — FLOOR DRAIN X - NO. IN SPECS
- HD-X — HUB DRAIN X - NO. IN SPECS

FLOW STREAM IDENTIFICATION

ALP	AIR, LOW PRESSURE PROCESS	NPW	(BACKFLOW PREVENTED)
BYP	BYPASS	OF	OVERFLOW
CNP	CONCENTRATED POLYMER	PD	PUMP DISCHARGE
D	SANITARY DRAIN	PRS	PROCESS SLUDGE
DEC	DECANT	RAS	RETURN ACTIVATED SLUDGE
DLP	DILUTE POLYMER	RS	RAW SEWAGE
DPS	DILUTE POLYMER SOLUTION	SBS	SODIUM BISULFITE SOLUTION
DR	PROCESS DRAIN	SE	SECONDARY EFFLUENT
FE	FINAL EFFLUENT	V	VENT
FO	FUEL OIL	WAS	WASTE ACTIVATED SLUDGE
ML	MIXED LIQUOR	W-1	POTABLE CITY WATER
		W-3	NONPOTABLE WATER

HEAT TRACING

HTIP — HEAT TRACED AND INSULATED PIPE

(x) — END POINTS OF HEAT TRACED AND INSULATED PIPE

HEATING, VENTILATING, AND AIR CONDITIONING SYMBOLS

- WALL REGISTER OR GRILLE (SUPPLY) BG, BR, TG, TR
- CEILING DIFFUSER OR REGISTER (SUPPLY) CD, CR
- CEILING REGISTER OR GRILLE (RETURN AND EXHAUST) CG, CR
- WALL REGISTER OR GRILLE (RETURN AND EXHAUST) BG, BR, TG, TR
- TURNING VANES
- EXTRACTOR VANES
- FD — FIRE DAMPER
- SPLITTER DAMPER
- MANUAL BUTTERFLY DAMPER
- M — MOTORIZED DAMPER OR LOUVER
- FLEXIBLE CONNECTION
- FLEXIBLE DUCTWORK
- SUPPLY DUCT (SECTION)
- INTAKE, RETURN, OR EXHAUST DUCT (SECTION)
- T — THERMOSTAT
- (200) — 200 SCFM

REV NO	DESCRIPTION	APP'D	DATE

CH2M HILL
7600 West Tidwell Road, Suite 400
Houston Tx 77040
713.462.0161

Binkley & Barfield, Inc.
Consulting Engineers
1710 Seamist Drive Houston, Texas 77008

ALMEDA SIMS
SLUDGE PROCESSING FACILITY
IMPROVEMENTS

GFS NO R-0298-04-3
FILE NO: 4289-2

MECHANICAL LEGEND

CITY OF HOUSTON
DEPARTMENT OF PUBLIC WORKS AND ENGINEERING
ENGINEERING, CONSTRUCTION AND REAL ESTATE GROUP

SECTION APPROVALS

WATER ENGINEERING	TRAFFIC AND SIGNAL ENGINEERING
WASTEWATER ENGINEERING 7/1/97	STREET & BRIDGE ENGINEERING
STORM SEWER ENGINEERING	CONSTRUCTION 7/2/97

OTHER DEPARTMENTS

PLANNING AND DEVELOPMENT	SPONSOR DEPARTMENT

CITY ENGINEER — DATE 7/7/97

DIRECTOR OF PUBLIC WORKS AND ENGINEERING — DATE 7-8-97

SUBMITTED:
SCALE: NONE
DATE: JUNE 1997
SURVEY BY:
F B NO:

DESIGNED BY: MATTHEWS
DRAWN BY: DAVIS
DWG NO: M-01
SHEET NO 16 OF 56 SHEETS

CITY DWG NO: 33007

FILE DATE--OPERATOR: 06/25/97-AAA

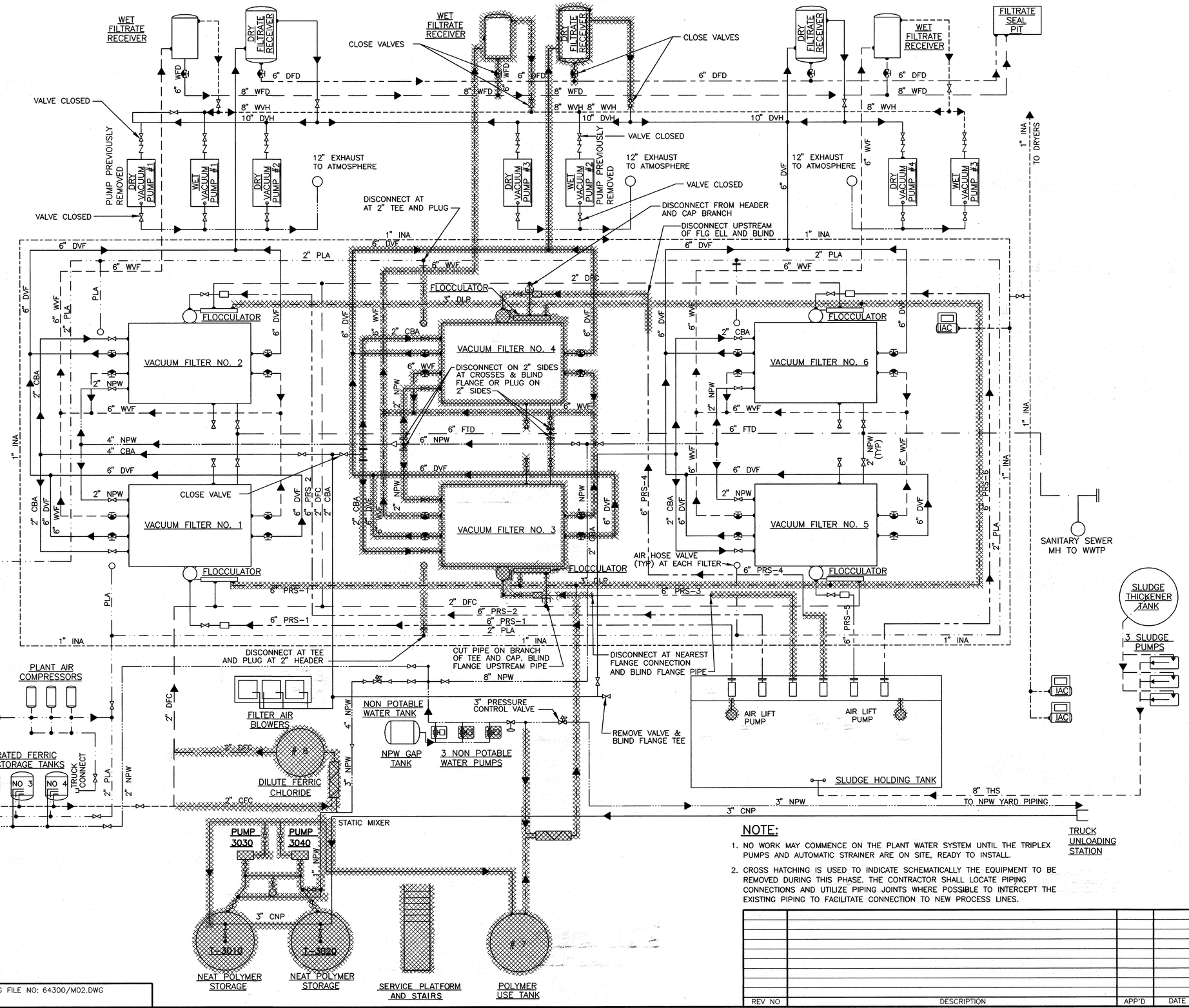

LEGEND

CBA	FILTER AIR	
CFC	CONCENTRATED FERRIC CHLORIDE	
CNP	CONCENTRATED POLYMER	
DFA	DIFFUSER AIR	
DFC	DILUTE FERRIC CHLORIDE	
DFD	DRY FILTRATE DRAIN	
DLP	DILUTE POLYMER	
DPS	DILUTE POLYMER SOLUTION	
DVF	DRY VACUUM FILTRATE	
DVH	DRY VACUUM HEADER	
EXA	AIR EXHAUST	
EDA	EDUCTOR AIR	
FTD	FILTER DRAIN	
INA	INSTRUMENT AIR	
NPW	NON POTABLE PLANT WATER	
PLA	PLANT AIR	
PRS	PROCESS SLUDGE	
THS	THICKENED SLUDGE	
WFD	WET FILTRATE DRAIN	
WVF	WET VACUUM FILTRATE	
WVH	WET VACUUM HEADER	

BALL VALVE
BUTTERFLY VALVE
CHECK VALVE
SEAT PORT
ECCENTRIC PLUG
GATE VALVE
GLOBE VALVE
SARAN LINED DIAPHRAGM VALVE

CH2M HILL
7600 West Tidwell Road, Suite 400
Houston Tx 77040
713.462.0161

Binkley & Barfield, Inc.
Consulting Engineers
1710 Seamist Drive Houston, Texas 77008

ALMEDA SIMS
SLUDGE PROCESSING FACILITY IMPROVEMENTS

GFS NO R-0298-04-3
FILE NO: 4289-2

SCHEMATIC
PIPING PLAN PHASE I
DEMOLITION

CITY OF HOUSTON
DEPARTMENT OF PUBLIC WORKS AND ENGINEERING
ENGINEERING, CONSTRUCTION AND REAL ESTATE GROUP

SECTION APPROVALS

WATER ENGINEERING	TRAFFIC AND SIGNAL ENGINEERING
WASTEWATER ENGINEERING 7/1/97	STREET & BRIDGE ENGINEERING
STORM SEWER ENGINEERING	CONSTRUCTION 7/9/97

OTHER DEPARTMENTS

PLANNING AND DEVELOPMENT	SPONSOR DEPARTMENT

CITY ENGINEER — DATE 7/7/97
DIRECTOR OF PUBLIC WORKS AND ENGINEERING — DATE 7-8-97

NOTE:

1. NO WORK MAY COMMENCE ON THE PLANT WATER SYSTEM UNTIL THE TRIPLEX PUMPS AND AUTOMATIC STRAINER ARE ON SITE, READY TO INSTALL.
2. CROSS HATCHING IS USED TO INDICATE SCHEMATICALLY THE EQUIPMENT TO BE REMOVED DURING THIS PHASE. THE CONTRACTOR SHALL LOCATE PIPING CONNECTIONS AND UTILIZE PIPING JOINTS WHERE POSSIBLE TO INTERCEPT THE EXISTING PIPING TO FACILITATE CONNECTION TO NEW PROCESS LINES.

REV NO	DESCRIPTION	APP'D	DATE

SEAL: STATE OF TEXAS — H. J. KJELLBERG — 38055 — REGISTERED PROFESSIONAL ENGINEER — 6/30/97

CADD DWG FILE NO: 64300/M02.DWG

COHSTD.BDR

0 1 2 3 ORIGINAL SCALE IN INCHES FOR REDUCED PLANS

SUBMITTED:
SCALE: NONE
DATE: JUNE 1997
SURVEY BY:
F B NO:

DESIGNED BY: HJK
DRAWN BY: AAA
DWG NO: M-02
SHEET NO 17 OF 56 SHEETS

CITY DWG NO: 33007

FILE DATE--OPERATOR-- 06/24/97--AAA

WET FILTRATE RECEIVER
DRY FILTRATE RECEIVER
VALVES CLOSED
6" DFD
8" WFD
8" WVH
10" DVH
VALVE CLOSED
PUMP PREVIOUSLY REMOVED
DRY VACUUM PUMP #1
WET VACUUM PUMP #1
DRY VACUUM PUMP #2
12" EXHAUST TO ATMOSPHERE
TEMPORARY DRAIN TO EXISTING FILTRATE TRENCH
DRY VACUUM PUMP #3
WET VACUUM PUMP #2
FILTRATE SEAL PIT
WET VACUUM PUMP #4
WET VACUUM PUMP #3
6" DVF
6" WVF
1" INA
TO DRYERS
2" PLA
2" DFC
CLOSE AFTER NEW INSTRUMENT AIR COMPRESSOR IS OPERATIONAL
FLOCCULATOR
VACUUM FILTER NO. 2
VACUUM FILTER NO. 6
VACUUM FILTER NO. 1
VACUUM FILTER NO. 5
IAC
SEE NOTE
POLYMER INJECTION RING
PRESSURE CONTROL VALVE
TO DRAIN
6" FTD
10" FTD
BFP-2400
1 1/2" NPW
DIVERTER VALVE
BFP-2300
TEMPORARY DRAIN PIPING
AIR HOSE VALVE AT EACH FILTER (TYP)
SANITARY SEWER MH TO WWTP
SLUDGE THICKENER TANK
3 SLUDGE PUMPS
PLANT AIR COMPRESSORS
FILTER AIR BLOWERS
DRYER
CONCENTRATED FERRIC CHLORIDE STORAGE TANKS
NO 1
NO 2
NO 3
NO 4
TRUCK CONNECT
NPW GAP TANK
NPW TRIPLEX PUMPS
NPW STRAINER
SFP-1300
SFP-1400
SFP-1200
SFP-1600
10" PRS
SLUDGE HOLDING TANK
8" THS
6" W-3
3" NPW
3" CNP
TO NPW YARD PIPING
TRUCK UNLOADING STATION
W-3 FROM WWTP
STATIC MIXER
PDU-3100A
PDU-3100B
PDU-3200
PDU-3400
PDU-3600
PDU-3300
3" DLP
POLYMER STORAGE
T-3010
T-3020
T-3210
T-3220
PUMP 3030
PUMP 3040
MIXING/AGING TANK
USE TANK

NOTE:
THE CONTRACTOR SHALL PROVIDE TEMPORARY PIPING OR HOSE FROM THE 10" DRAIN HEADERS ON BFP 2300 AND 2400 TO THE EXISTING FILTRATE TRENCH AND/OR THE FLOOR DRAIN TRENCH. HE SHALL INSTALL BOTH FLOOR DRAINS AND FILTER DRAIN WITH THEIR PERMANANT PIPING IN PLACE TO THE 10" 90° ELL. HE SHALL TEMPORARILY ROTATE THIS ELL DOWN AND MAKE HIS TEMPORARY CONNECTION TO IT.

REV NO	DESCRIPTION	APP'D	DATE

LEGEND

CBA	FILTER AIR	
CFC	CONCENTRATED FERRIC CHLORIDE	
CNP	CONCENTRATED PLOYMER	
DFA	DIFFUSER AIR	
DFC	DILUTE FERRIC CHLORIDE	
DFD	DRY FILTRATE DRAIN	
DLP	DILUTE POLYMER	
DPS	DILUTE POLYMER SOLUTION	
DVF	DRY VACUUM FILTRATE	
DVH	DRY VACUUM HEADER	
EXA	AIR EXHAUST	
EDA	EDUCTOR AIR	
FTD	FILTER DRAIN	
INA	INSTRUMENT AIR	
NPW	NON POTABLE PLANT WATER	
PLA	PLANT AIR	
PRS	PROCESS SLUDGE	
THS	THICKENEDED SLUDGE	
WFD	WET FILTRATE DRAIN	
WVF	WET VACUUM FILTRATE	
WVH	WET VACUUM HEADER	
	BALL VALVE	
	BUTTERFLY VALVE	
	CHECK VALVE	
	ECCENTRIC PLUG	SEAT PORT
	GATE VALVE	
	GLOBE VALVE	
	SARAN LINED DIAPHRAM VALVE	

CH2M HILL
7600 West Tidwell Road, Suite 400
Houston Tx 77040
713.462.0161

Binkley & Barfield, Inc.
Consulting Engineers
1710 Seamist Drive Houston, Texas 77008

ALMEDA SIMS SLUDGE PROCESSING FACILITY IMPROVEMENTS

GFS NO R-0298-04-3
FILE NO: 4289-2

SCHEMATIC PIPING PLAN PHASE I CONSTRUCTION

CITY OF HOUSTON
DEPARTMENT OF PUBLIC WORKS AND ENGINEERING
ENGINEERING, CONSTRUCTION AND REAL ESTATE GROUP

SECTION APPROVALS

WATER ENGINEERING	TRAFFIC AND SIGNAL ENGINEERING
WASTEWATER ENGINEERING 7/1/97	STREET & BRIDGE ENGINEERING
STORM SEWER ENGINEERING	CONSTRUCTION 7/8/97

OTHER DEPARTMENTS

PLANNING AND DEVELOPMENT	SPONSOR DEPARTMENT

CITY ENGINEER 7/7/97 DATE
DIRECTOR OF PUBLIC WORKS AND ENGINEERING 7-8-97 DATE

SUBMITTED:
SCALE: NONE
DATE: JUNE 1997
SURVEY BY:
F B NO:

DESIGNED BY: HJK
DRAWN BY: AAA
DWG NO: M-03
SHEET NO 18OF56 SHEETS
CITY DWG NO: 33007

SEAL: H. J. KJELLBERG 38055 REGISTERED PROFESSIONAL ENGINEER STATE OF TEXAS 6/30/97

CADD DWG FILE NO: 64300/M03.DWG

COHSTD.BDR

0 1 2 3 ORIGINAL SCALE IN INCHES FOR REDUCED PLANS

FILE DATE--OPERATOR: 06/25/97-AAA

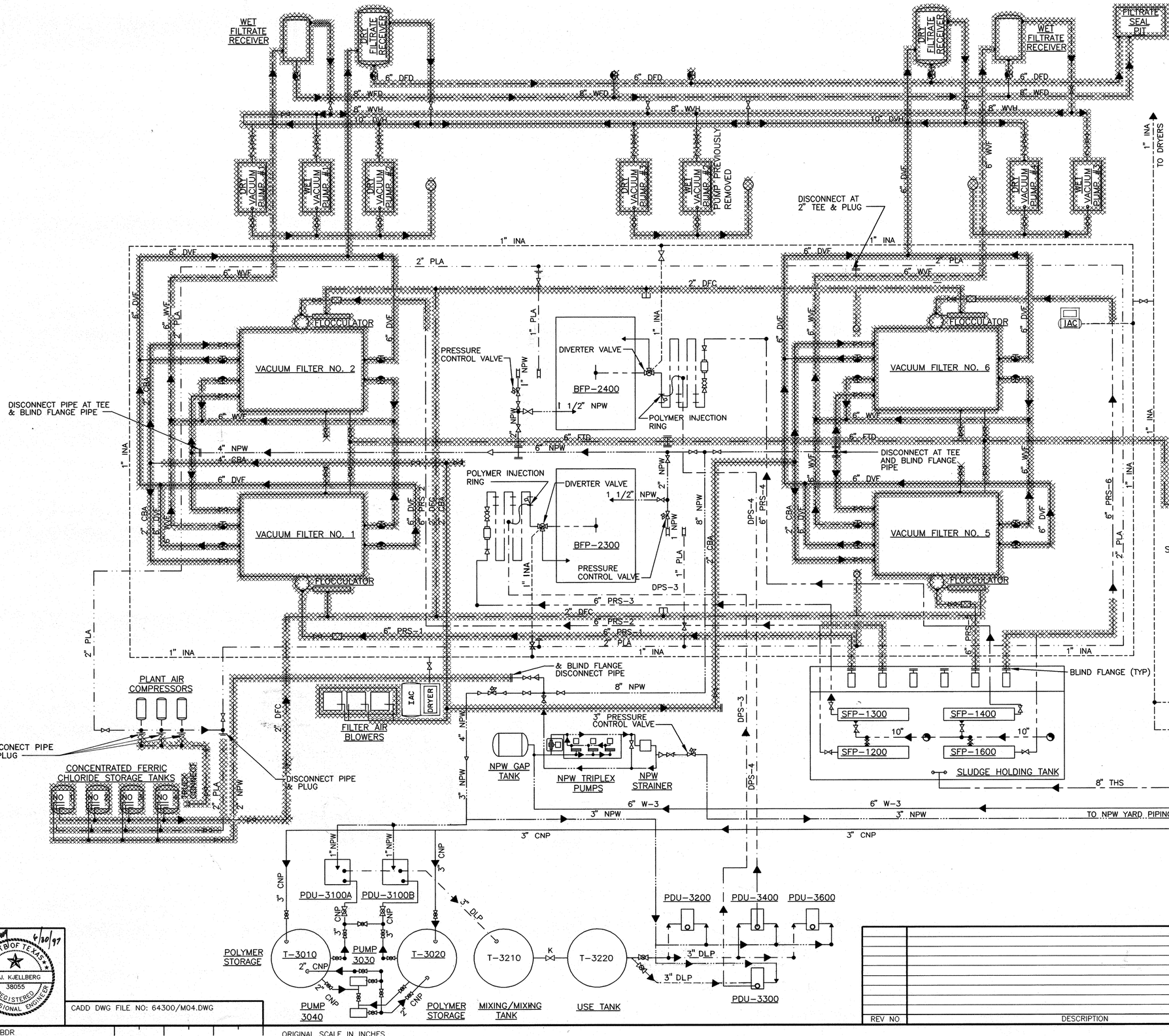

LEGEND

CBA	FILTER AIR
CFC	CONCENTRATED FERRIC CHLORIDE
CNP	CONCENTRATED PLOYMER
DFA	DIFFUSER AIR
DFC	DILUTE FERRIC CHLORIDE
DFD	DRY FILTRATE DRAIN
DLP	DILUTE POLYMER
DPS	DILUTE POLYMER SOLUTION
DVF	DRY VACUUM FILTRATE
DVH	DRY VACUUM HEADER
EXA	AIR EXHUAST
EDA	EDUCTOR AIR
FTD	FILTER DRAIN
INA	INSTRUMENT AIR
NPW	NON POTABLE PLANT WATER
PLA	PLANT AIR
PRS	PROCESS SLUDGE
THS	THICKENEDED SLUDGE
WFD	WET FILTRATE DRAIN
WVF	WET VACUUM FILTRATE
WVH	WET VACUUM HEADER

BALL VALVE
BUTTERFLY VALVE
CHECK VALVE
SEAT PORT
ECCENTRIC PLUG
GATE VALVE
GLOBE VALVE
SARAN LINED DIAPHRAM VALVE

CH2M HILL
7600 West Tidwell Road, Suite 400
Houston Tx 77040
713.462.0161

Binkley & Barfield, Inc.
Consulting Engineers
1710 Seamist Drive Houston, Texas 77008

ALMEDA SIMS SLUDGE PROCESSING FACILITY IMPROVEMENTS

GFS NO R-0298-04-3
FILE NO: 4289-2

SCHEMATIC PIPING PLAN PHASE II DEMOLITION

CITY OF HOUSTON

DEPARTMENT OF PUBLIC WORKS AND ENGINEERING
ENGINEERING, CONSTRUCTION AND REAL ESTATE GROUP

SECTION APPROVALS

WATER ENGINEERING	TRAFFIC AND SIGNAL ENGINEERING
WASTEWATER ENGINEERING 7/1/97	STREET & BRIDGE ENGINEERING
STORM SEWER ENGINEERING	CONSTRUCTION Russell E. Mois 7/8/97

OTHER DEPARTMENTS

PLANNING AND DEVELOPMENT	SPONSOR DEPARTMENT

CITY ENGINEER — DATE 7/7/97

DIRECTOR OF PUBLIC WORKS AND ENGINEERING — DATE 7-8-97

SEAL: STATE OF TEXAS — H. J. KJELLBERG — 38055 — REGISTERED PROFESSIONAL ENGINEER — 6/30/97

CADD DWG FILE NO: 64300/M04.DWG

COHSTD.BDR

0 1 2 3 ORIGINAL SCALE IN INCHES FOR REDUCED PLANS

REV NO	DESCRIPTION	APP'D	DATE

SUBMITTED:
SCALE: NONE
DATE: JUNE 1997
SURVEY BY:
F B NO:

DESIGNED BY: HJK
DRAWN BY: AAA
DWG NO: M-04
SHEET NO 19 OF 56 SHEETS
CITY DWG NO: 33007

FILE DATE--OPERATOR: 06/25/97--AAA

LEGEND

CBA	FILTER AIR
CNP	CONCENTRATED PLOYMER
DFA	DIFFUSER AIR
DLP	DILUTE POLYMER
DPS	DILUTE POLYMER SOLUTION
EXA	AIR EXHUAST
EDA	EDUCTOR AIR
FTD	FILTER DRAIN
INA	INSTRUMENT AIR
NPW	NON POTABLE PLANT WATER
PLA	PLANT AIR
PRS	PROCESS SLUDGE
THS	THICKENEDED SLUDGE
	BALL VALVE
	BUTTERFLY VALVE
	CHECK VALVE
	ECCENTRIC PLUG (SEAT PORT)
	GATE VALVE
	GLOBE VALVE
	SARAN LINED DIAPHRAM VALVE

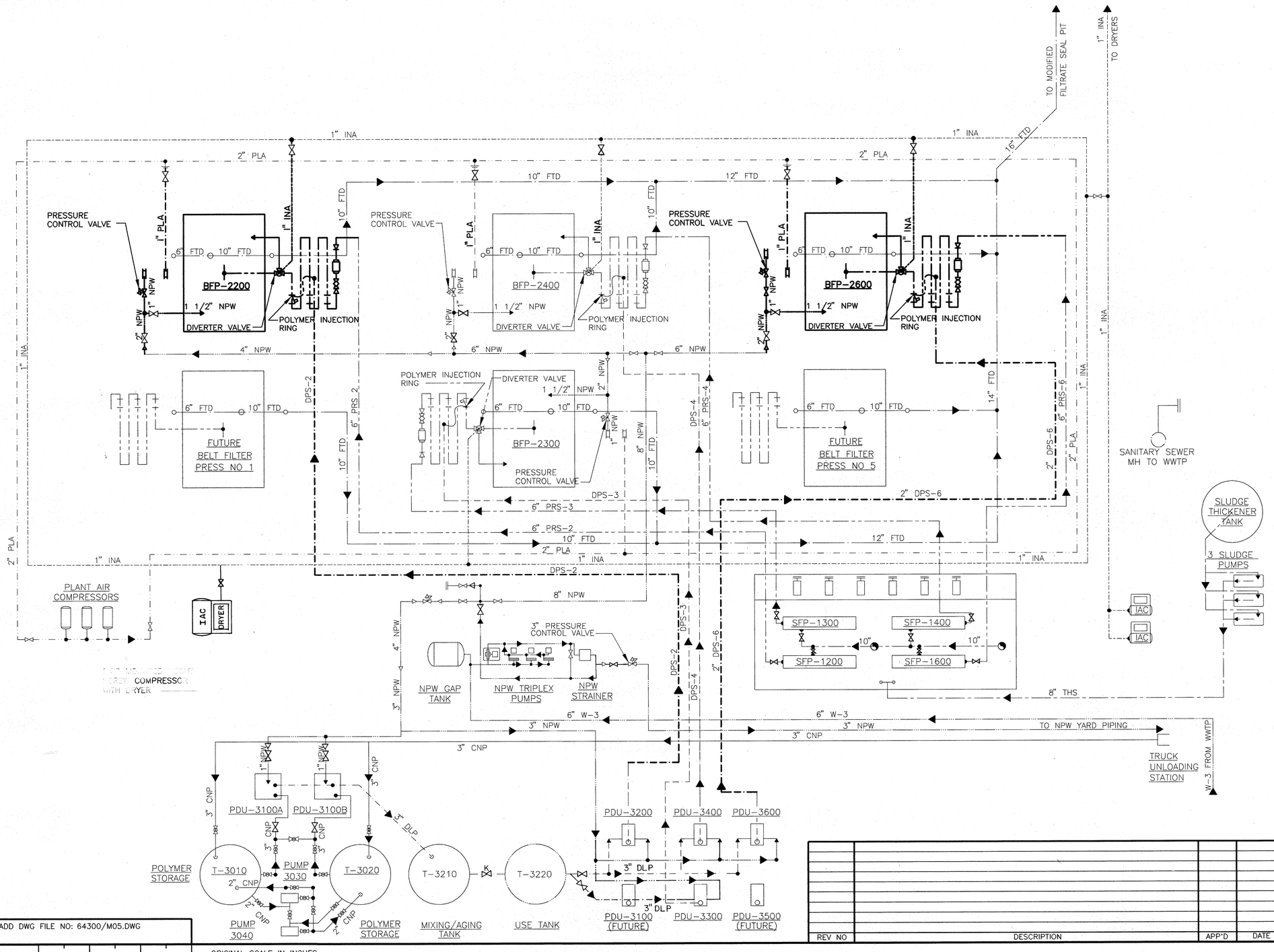

CH2M HILL
7600 West Tidwell Road, Suite 400
Houston Tx 77040
713.462.0161

Binkley & Barfield, Inc.
Consulting Engineers
1710 Seamist Drive Houston, Texas 77008

ALMEDA SIMS
SLUDGE PROCESSING FACILITY IMPROVEMENTS

GFS NO R-0298-04-3
FILE NO: 4289-2

SCHEMATIC PIPING PLAN PHASE II CONSTRUCTION

CITY OF HOUSTON
DEPARTMENT OF PUBLIC WORKS AND ENGINEERING
ENGINEERING, CONSTRUCTION AND REAL ESTATE GROUP

SECTION APPROVALS

WATER ENGINEERING	TRAFFIC AND SIGNAL ENGINEERING
WASTEWATER ENGINEERING 7/1/97	STREET & BRIDGE ENGINEERING
STORM SEWER ENGINEERING	CONSTRUCTION 7/3/97

OTHER DEPARTMENTS

PLANNING AND DEVELOPMENT	SPONSOR DEPARTMENT

CITY ENGINEER — DATE 7/7/97
DIRECTOR OF PUBLIC WORKS AND ENGINEERING — DATE 7-8-97

SEAL: H. J. KJELLBERG, 38055, REGISTERED PROFESSIONAL ENGINEER, STATE OF TEXAS, 6/20/97

REV NO	DESCRIPTION	APP'D	DATE

SUBMITTED:
SCALE: NONE
DATE: JUNE 1997
SURVEY BY:
F B NO:

DESIGNED BY: HJK
DRAWN BY: AAA
DWG NO: M-05
SHEET NO 20 OF 56 SHEETS
CITY DWG NO: 33007

CADD DWG FILE NO: 64300/M05.DWG

COHSTD.BDR

0 1 2 3 ORIGINAL SCALE IN INCHES FOR REDUCED PLANS

FILE DATE--OPERATOR: 04/22/97--DVB

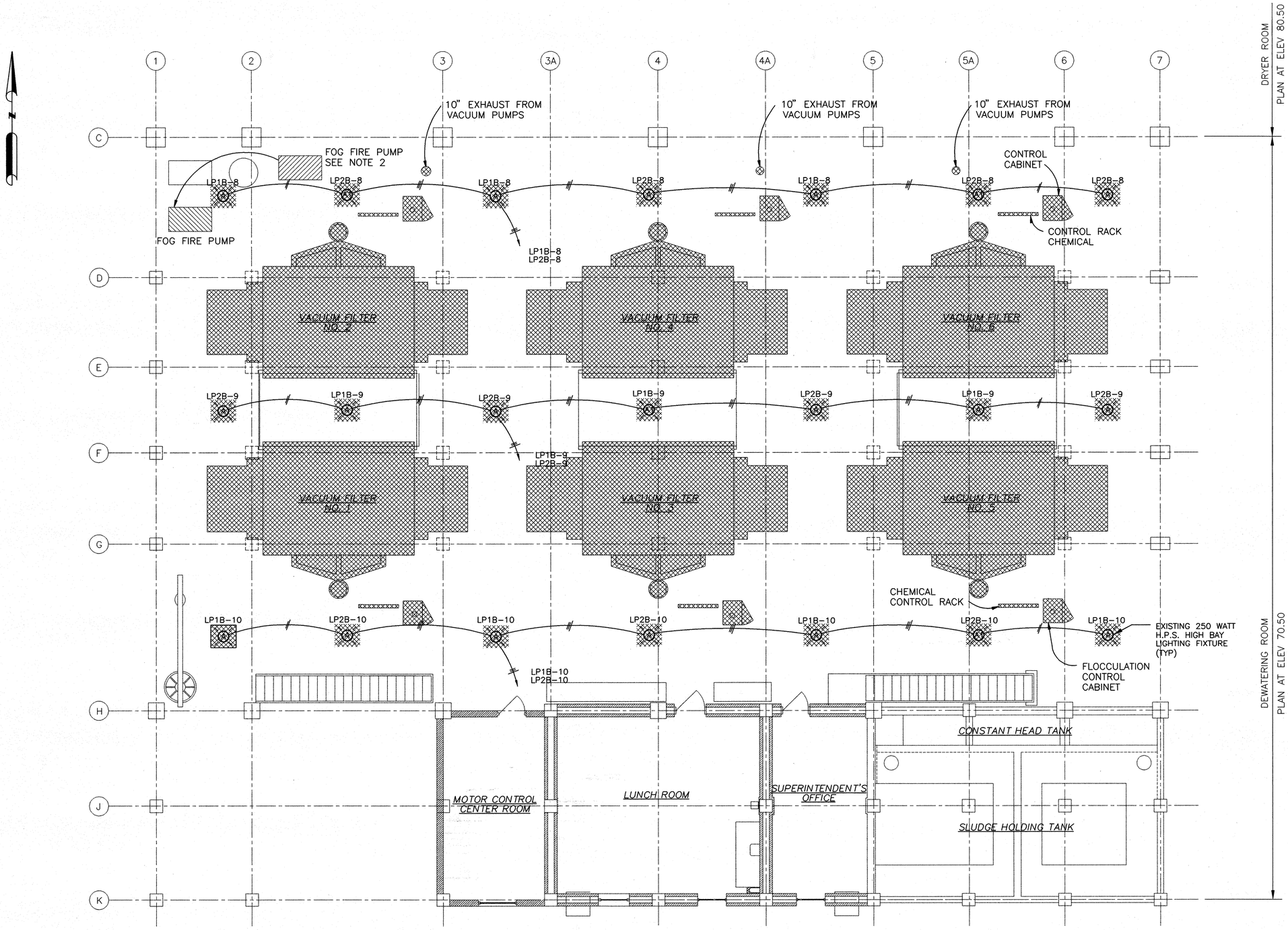

PLAN

NOTES:

1. REMOVE ALL PIPING ASSOCIATED WITH DEMOLISHED EQUIPMENT
2. THE CONTRACTOR SHALL DISCONNECT THE FOG FIRE PUMP AND RELOCATE IT TO THE POSITION SHOWN. HE SHALL RECONNECT ALL PIPING, ELECTRICAL TO THE PUMP AT ITS PROPOSED LOCATION.

LIGHTING FIXTURE AND ASSOCIATED CONDUITS TO BE DEMOLISHED.

EQUIPMENT TO BE DEMOLISHED

EQUIPMENT TO BE MOVED

PROPOSED LOCATION

CH2M HILL
7600 West Tidwell Road, Suite 400
Houston Tx 77040
713.462.0161

Binkley & Barfield, Inc.
Consulting Engineers
1710 Seamist Drive Houston, Texas 77008

ALMEDA SIMS
SLUDGE PROCESSING FACILITY IMPROVEMENTS

GFS NO R-0298-04-3
FILE NO: 4289-2

EQUIPMENT AND LIGHTING DEMOLITION PLAN AT ELEVATION 70.50

CITY OF HOUSTON
DEPARTMENT OF PUBLIC WORKS AND ENGINEERING
ENGINEERING, CONSTRUCTION AND REAL ESTATE GROUP

SECTION APPROVALS

WATER ENGINEERING	TRAFFIC AND SIGNAL ENGINEERING
WASTEWATER ENGINEERING 7/1/97	STREET & BRIDGE ENGINEERING
STORM SEWER ENGINEERING	CONSTRUCTION 7/8/97

OTHER DEPARTMENTS

PLANNING AND DEVELOPMENT	SPONSOR DEPARTMENT

CITY ENGINEER — DATE 7/7/97

DIRECTOR OF PUBLIC WORKS AND ENGINEERING — DATE 7-8-97

SEAL: STATE OF TEXAS — H. J. KJELLBERG — 38055 — REGISTERED PROFESSIONAL ENGINEER — 6/30/97

REV NO	DESCRIPTION	APP'D	DATE

SUBMITTED:
SCALE: 3/16" = 1'-0"
DATE: JUNE 1997
SURVEY BY:
F B NO:

DESIGNED BY: HJK
DRAWN BY: AAA
DWG NO: M-06
SHEET NO 21 OF 56 SHEETS

CITY DWG NO: 33007

CADD DWG FILE NO: 64300/M06.DWG

COHSTD.BDR

0 1 2 3 ORIGINAL SCALE IN INCHES FOR REDUCED PLANS

FILE DATE—OPERATOR: 04/22/97—DVB

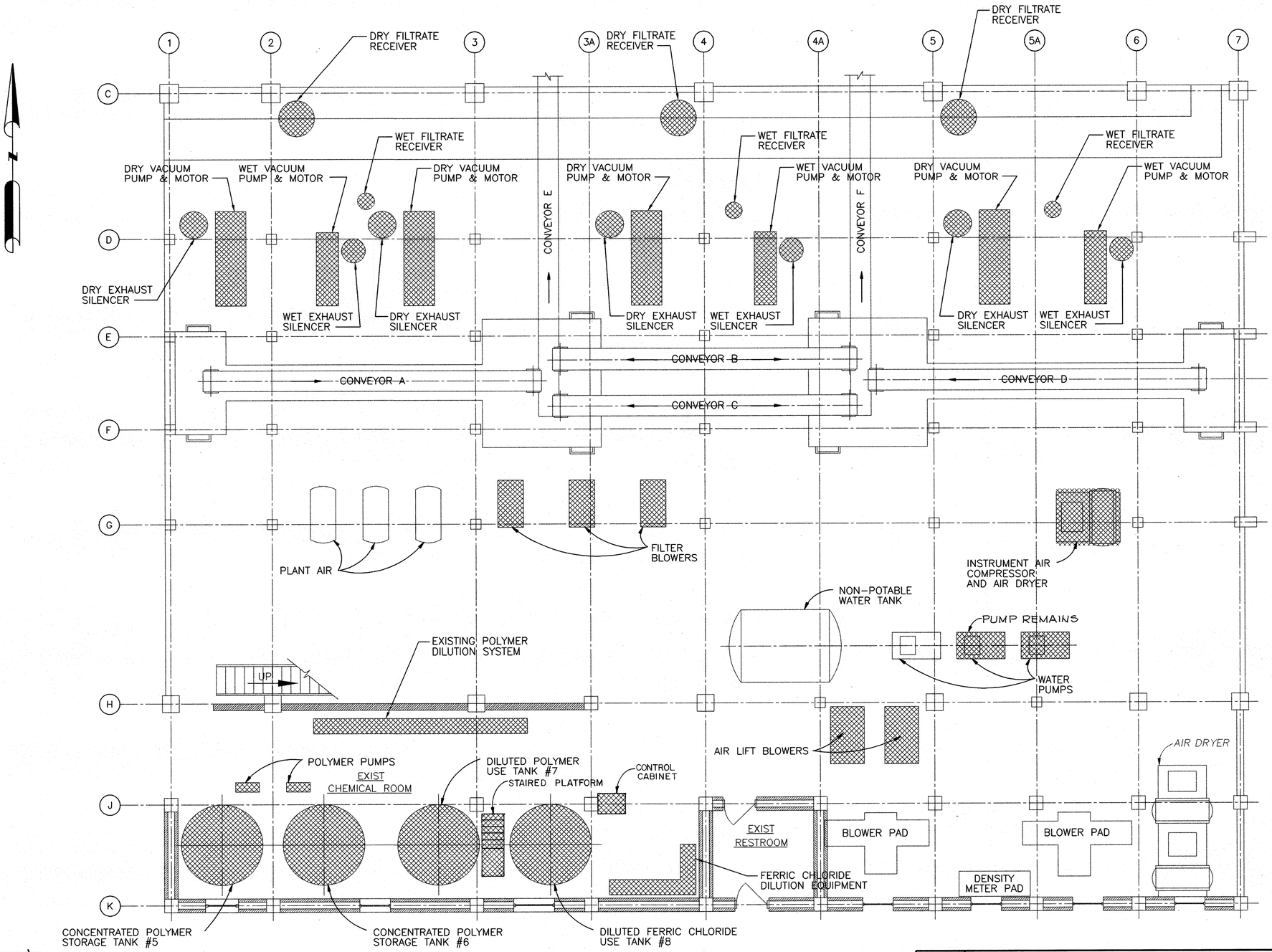

DRYING ROOM

FILTER ROOM

PLAN
3/16"=1'-0"

NOTES:

1. REMOVE ALL PIPING ASSOCIATED WITH DEMOLISHED EQUIPMENT UNLESS OTHERWISE NOTED.
2. SOME OF THE PIPING & EQUIPMENT SHOWN TO BE DEMOLISHED HAS BEEN PREVIOUSLY REMOVED OR PARTIALLY DISMANTLED. THE CONTRACTOR SHALL REMOVE ALL REMAINING EQUIPMENT, PIPING, AND CONCRETE PEDESTALS.
3. THE CONTRACTOR SHALL REMOVE ALL SURPLUS CONCRETE PEDESTALS TO A MINIMUM OF 1" BELOW THE SURFACE OF THE EXISTING FLOOR. HE SHALL USE POLYMER GROUT TO REPAIR THE FLOOR. HE SHALL FINISH THE GROUT FLUSH WITH THE EXISTING FLOOR.

▨ EQUIPMENT TO BE DEMOLISHED

CH2M HILL
7600 West Tidwell Road, Suite 400
Houston Tx 77040
713.462.0161

Binkley & Barfield, Inc.
Consulting Engineers
1710 Seamist Drive Houston, Texas 77008

ALMEDA SIMS
SLUDGE PROCESSING FACILITY IMPROVEMENTS

GFS NO R-0298-04-3
FILE NO: 4289-2

EQUIPMENT DEMOLITION PLAN
@ ELEVATION 54.50

CITY OF HOUSTON
DEPARTMENT OF PUBLIC WORKS AND ENGINEERING
ENGINEERING, CONSTRUCTION AND REAL ESTATE GROUP

SECTION APPROVALS

WATER ENGINEERING	TRAFFIC AND SIGNAL ENGINEERING
WASTEWATER ENGINEERING 7/1/97	STREET & BRIDGE ENGINEERING
STORM SEWER ENGINEERING	CONSTRUCTION 7/3/97

OTHER DEPARTMENTS

PLANNING AND DEVELOPMENT	SPONSOR DEPARTMENT

CITY ENGINEER — DATE 7/7/97

DIRECTOR OF PUBLIC WORKS AND ENGINEERING — DATE 7-8-97

SEAL: H. J. KJELLBERG 38055 REGISTERED PROFESSIONAL ENGINEER STATE OF TEXAS 4/30/97

CADD DWG FILE NO: 64300/M07.DWG

COHSTD.BDR

0 1 2 3 ORIGINAL SCALE IN INCHES FOR REDUCED PLANS

REV NO	DESCRIPTION	APP'D	DATE

SUBMITTED:
SCALE: 3/16" = 1'-0"
DATE: JUNE 1997
SURVEY BY:
F B NO:

DESIGNED BY: HJK
DRAWN BY: AAA
DWG NO: M-07
SHEET NO 22 OF 56 SHEETS

CITY DWG NO:
33007

FILE DATE--OPERATOR: 06/25/97--AAA

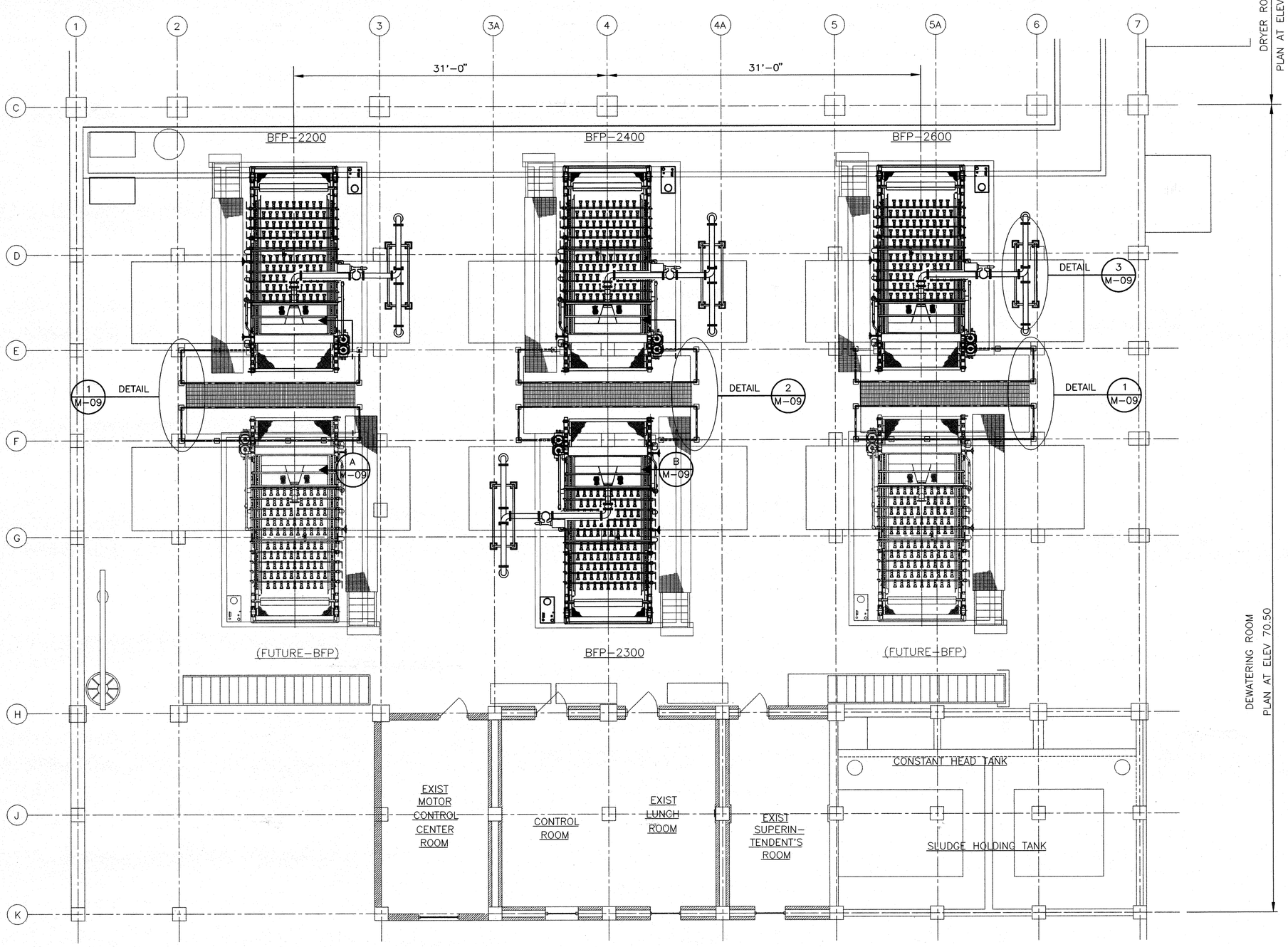

CH2M HILL
7600 West Tidwell Road, Suite 400
Houston Tx 77040
713.462.0161

Binkley & Barfield, Inc.
Consulting Engineers
1710 Seamist Drive Houston, Texas 77008

ALMEDA SIMS SLUDGE PROCESSING FACILITY IMPROVEMENTS

GFS NO R-0298-04-3
FILE NO: 4289-2

BELT FILTER PRESS PLAN

CITY OF HOUSTON

DEPARTMENT OF PUBLIC WORKS AND ENGINEERING
ENGINEERING, CONSTRUCTION AND REAL ESTATE GROUP

SECTION APPROVALS

WATER ENGINEERING	TRAFFIC AND SIGNAL ENGINEERING
WASTEWATER ENGINEERING 7/1/97	STREET & BRIDGE ENGINEERING
STORM SEWER ENGINEERING	CONSTRUCTION 7/1/97

OTHER DEPARTMENTS

PLANNING AND DEVELOPMENT	SPONSOR DEPARTMENT

CITY ENGINEER — DATE 7/7/97

DIRECTOR OF PUBLIC WORKS AND ENGINEERING — DATE 7-8-97

SEAL: STATE OF TEXAS — H. J. KJELLBERG — 38055 — REGISTERED PROFESSIONAL ENGINEER — 6/30/97

CADD DWG FILE NO: 64300/M08.DWG

COHSTD.BDR

0 1 2 3 ORIGINAL SCALE IN INCHES FOR REDUCED PLANS

REV NO	DESCRIPTION	APP'D	DATE

SUBMITTED:
SCALE: 3/16" = 1'-0"
DATE: JUNE 1997
SURVEY BY:
F B NO:

DESIGNED BY: HJK
DRAWN BY: RPD
DWG NO: M-08
SHEET NO 23 OF 56 SHEETS

CITY DWG NO: 33007

FILE DATE--OPERATOR: 05/12/97--AAA

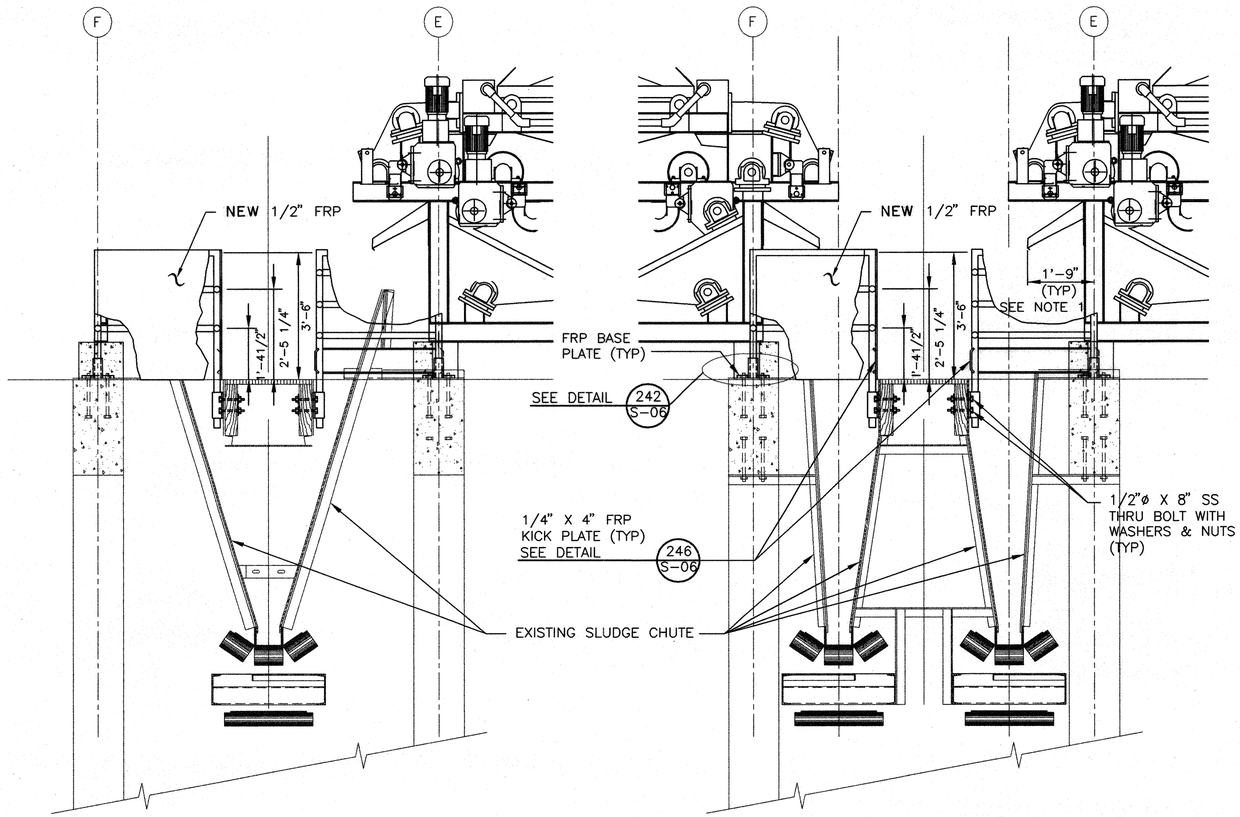

SECTION A
SCALE: 1/2"=1'-0" (A / M-08)

SECTION B
SCALE: 1/2"=1'-0" (B / M-08)

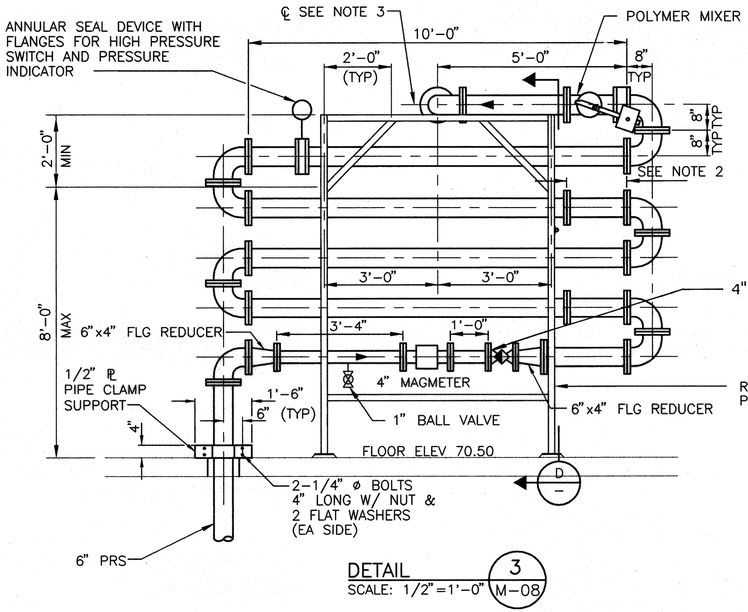

DETAIL 3 (M-08)
SCALE: 1/2"=1'-0"

NOTES:

1. THE CONTRACTOR SHALL PROVIDE DOCTOR BLADES WHICH EXTEND 1'-9" BEYOND THE CENTERLINE OF THE EXISTING CONCRETE BEAM TO DISCHARGE INTO THE EXISTING CHUTES AS SHOWN.
2. THE CONTRACTOR SHALL FURNISH MIXER AND TWO INTERCHANGEABLE FLANGED SPOOL PIECES.
3. ELEVATION SHALL MATCH THE INLET ELEVATION OF THE BELT FILTER PRESS FURNISHED.

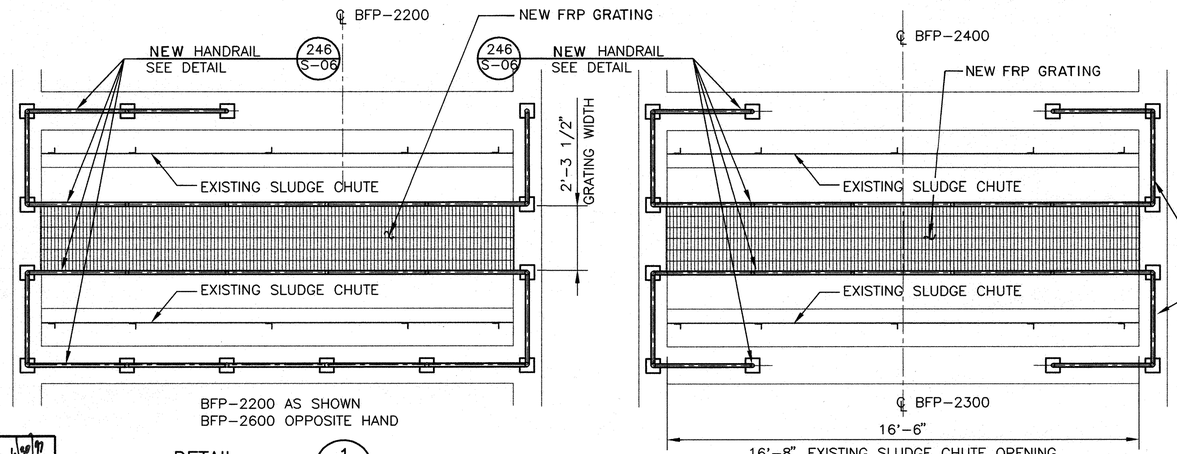

DETAIL 1 (M-08)
SCALE: 3/8"=1'-0"

DETAIL 2 (M-08)
SCALE: 3/8"=1'-0"

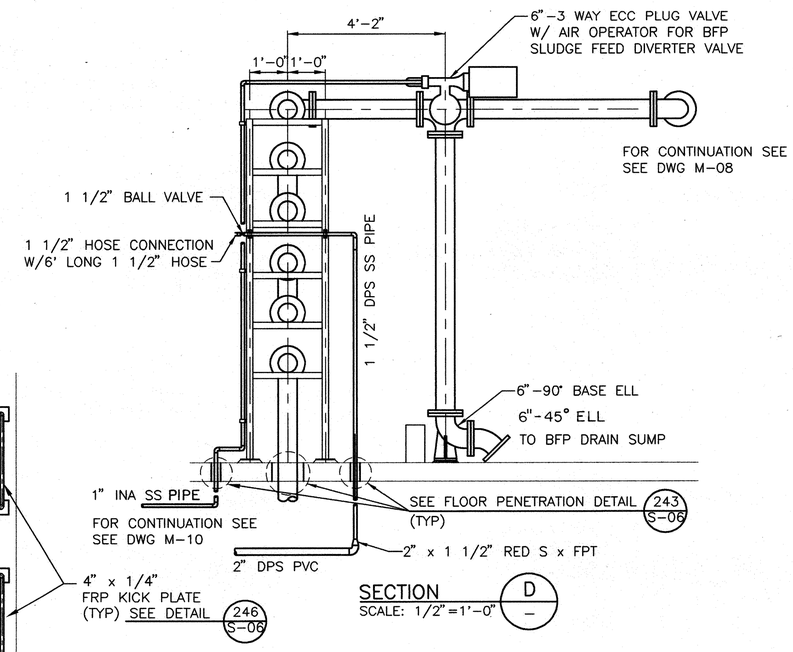

SECTION D
SCALE: 1/2"=1'-0"

CH2M HILL
7600 West Tidwell Road, Suite 400
Houston Tx 77040
713.462.0161

Binkley & Barfield, Inc.
Consulting Engineers
1710 Seamist Drive Houston, Texas 77008

ALMEDA SIMS
SLUDGE PROCESSING FACILITY IMPROVEMENTS

GFS NO R-0298-04-3
FILE NO: 4289-2

BELT FILTER PRESS SECTIONS AND DETAILS

CITY OF HOUSTON
DEPARTMENT OF PUBLIC WORKS AND ENGINEERING
ENGINEERING, CONSTRUCTION AND REAL ESTATE GROUP

SECTION APPROVALS

WATER ENGINEERING	TRAFFIC AND SIGNAL ENGINEERING
WASTEWATER ENGINEERING 7/1/97	STREET & BRIDGE ENGINEERING
STORM SEWER ENGINEERING	CONSTRUCTION 7/3/97

OTHER DEPARTMENTS

PLANNING AND DEVELOPMENT	SPONSOR DEPARTMENT

CITY ENGINEER — DATE 7/7/97

DIRECTOR OF PUBLIC WORKS AND ENGINEERING — DATE 7-8-97

SEAL: H. J. KJELLBERG 38055 REGISTERED PROFESSIONAL ENGINEER, STATE OF TEXAS — 6/30/97

CADD DWG FILE NO: 64300/M09.DWG

COHSTD.BDR

0 1 2 3 ORIGINAL SCALE IN INCHES FOR REDUCED PLANS

REV NO	DESCRIPTION	APP'D	DATE

SUBMITTED:
SCALE: 1/2" = 1'-0"
DATE: JUNE 1997
SURVEY BY:
F B NO:

DESIGNED BY: HJK
DRAWN BY: AAA
DWG NO: M-09
SHEET NO 24 OF 56 SHEETS
CITY DWG NO: 33007

FILE DATE-OPERATOR: 06/13/97-AAA

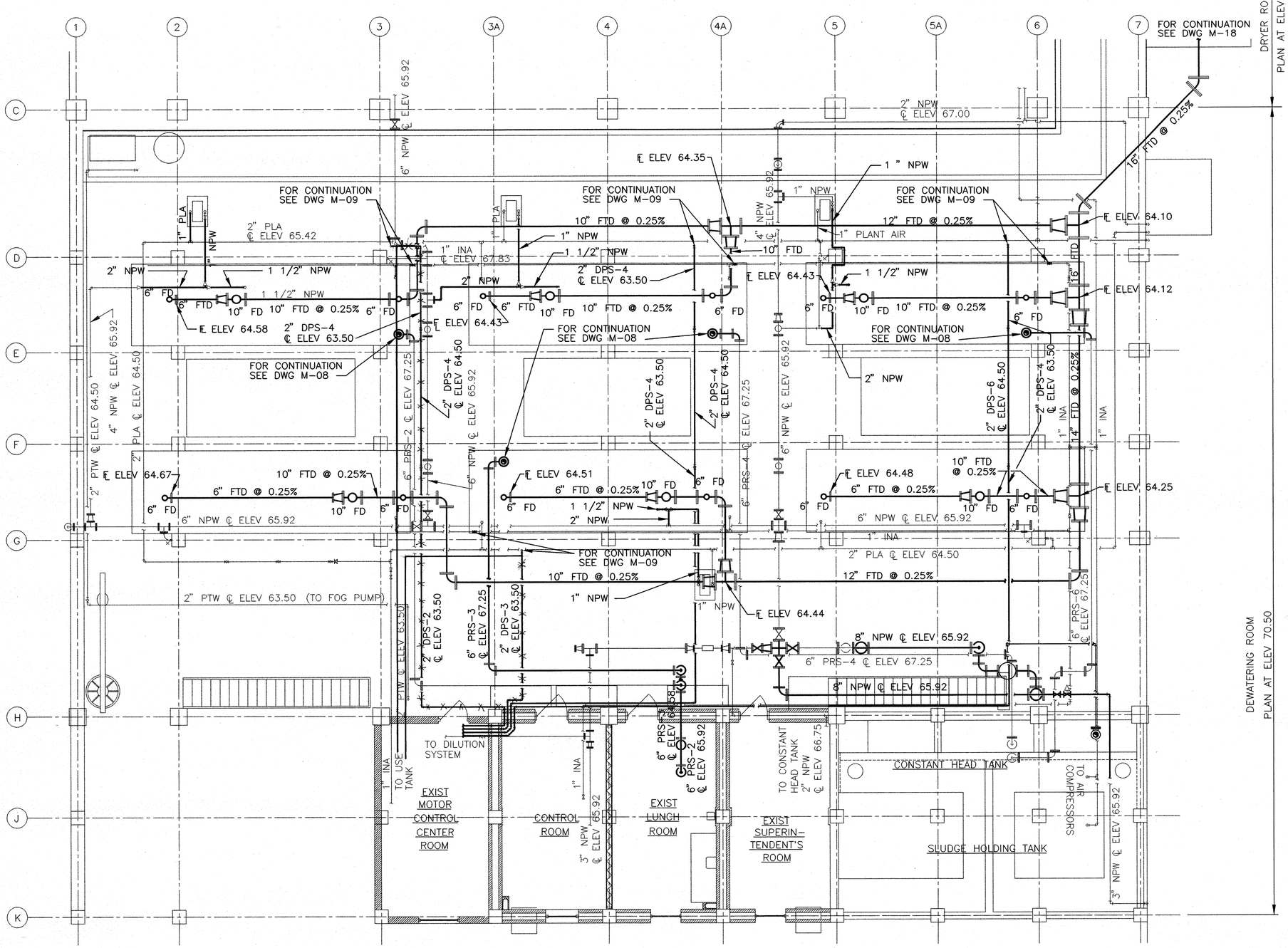

LEGEND

CBA	FILTER AIR
CFC	CONCENTRATED FERRIC CHLORIDE
CNP	CONCENTRATED PLOYMER
DFA	DIFFUSER AIR
DFC	DILUTE FERRIC CHLORIDE
DFD	DRY FILTRATE DRAIN
DLP	DILUTE POLYMER
DPS	DILUTE POLYMER SOLUTION
DVF	DRY VACUUM FILTRATE
DVH	DRY VACUUM HEADER
EXA	AIR EXHUAST
EDA	EDUCTOR AIR
FTD	FILTER DRAIN
INA	INSTRUMENT AIR
NPW	NON POTABLE PLANT WATER
PLA	PLANT AIR
PRS	PROCESS SLUDGE
PTW	POTABLE WATER
THS	THICKENEDED SLUDGE
WFD	WET FILTRATE DRAIN
WVF	WET VACUUM FILTRATE
WVH	WET VACUUM HEADER

EXISTING PIPING

NEW PIPING

NOTE:

1. PIPE HANGERS AND SUPPORTS SHALL BE PER SPECIFICATIONS SECTION 15140 AND MISCELLANEOUS STANDARD DETAILS DRAWING S-05. ALL PIPE HANGERS SHALL BE 221/S-05 WHERE POSSIBLE.

REV NO	DESCRIPTION	APP'D	DATE

CH2M HILL
7600 West Tidwell Road, Suite 400
Houston Tx 77040
713.462.0161

Binkley & Barfield, Inc.
Consulting Engineers
1710 Seamist Drive Houston, Texas 77008

ALMEDA SIMS SLUDGE PROCESSING FACILITY IMPROVEMENTS

GFS NO R-0298-04-3
FILE NO: 4289-2

BELT FILTER PRESS EQUIPMENT PIPING PLAN

CITY OF HOUSTON
DEPARTMENT OF PUBLIC WORKS AND ENGINEERING
ENGINEERING, CONSTRUCTION AND REAL ESTATE GROUP

SECTION APPROVALS

WATER ENGINEERING	TRAFFIC AND SIGNAL ENGINEERING
WASTEWATER ENGINEERING 7/1/97	STREET & BRIDGE ENGINEERING
STORM SEWER ENGINEERING	CONSTRUCTION 7/2/97

OTHER DEPARTMENTS

PLANNING AND DEVELOPMENT	SPONSOR DEPARTMENT

CITY ENGINEER 7/2/97 DATE

DIRECTOR OF PUBLIC WORKS AND ENGINEERING 7-8-97 DATE

SUBMITTED:
SCALE: 3/16" = 1'-0"
DATE: JUNE 1997
SURVEY BY:
F B NO:

DESIGNED BY: HJK
DRAWN BY: RPD
DWG NO: M-10
SHEET NO 25 OF 56 SHEETS
CITY DWG NO: 33007

SEAL: STATE OF TEXAS H. J. KJELLBERG 38055 REGISTERED PROFESSIONAL ENGINEER 6/30/97

CADD DWG FILE NO: 64300/M10.DWG

COHSTD.BDR

0 1 2 3 ORIGINAL SCALE IN INCHES FOR REDUCED PLANS

F:/64301/M10R1.DWG/HTG/7/9/98

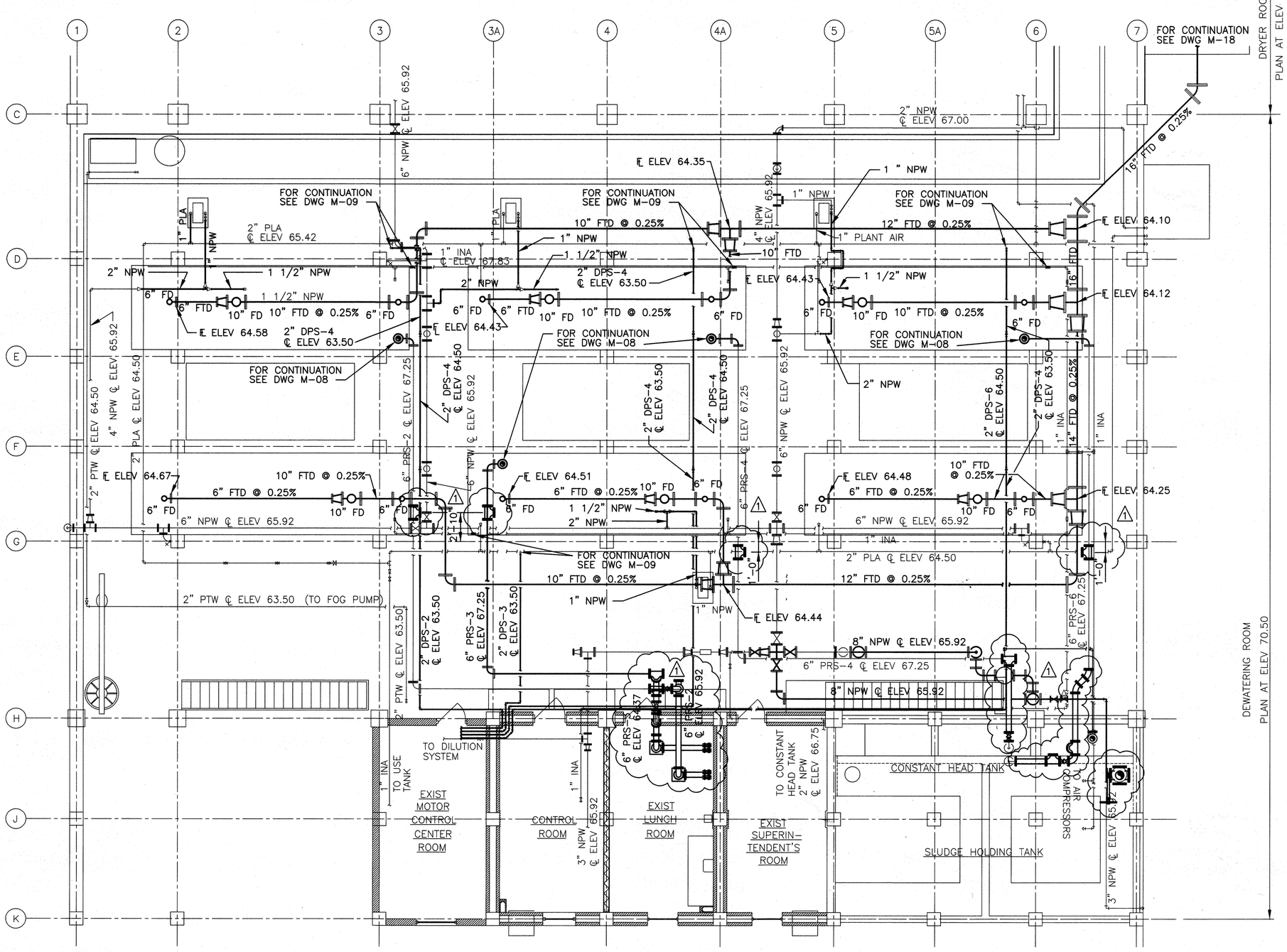

LEGEND

CBA	FILTER AIR	FTD	FILTER DRAIN
CFC	CONCENTRATED FERRIC CHLORIDE	INA	INSTRUMENT AIR
CNP	CONCENTRATED PLOYMER	NPW	NON POTABLE PLANT WATER
DFA	DIFFUSER AIR	PLA	PLANT AIR
DFC	DILUTE FERRIC CHLORIDE	PRS	PROCESS SLUDGE
DFD	DRY FILTRATE DRAIN	PTW	POTABLE WATER
DLP	DILUTE POLYMER	THS	THICKENEDED SLUDGE
DPS	DILUTE POLYMER SOLUTION	WFD	WET FILTRATE DRAIN
DVF	DRY VACUUM FILTRATE	WVF	WET VACUUM FILTRATE
DVH	DRY VACUUM HEADER	WVH	WET VACUUM HEADER
EXA	AIR EXHUAST		
EDA	EDUCTOR AIR		

EXISTING PIPING

NEW PIPING

NOTE:

1. PIPE HANGERS AND SUPPORTS SHALL BE PER SPECIFICATIONS SECTION 15140 AND MISCELLANEOUS STANDARD DETAILS DRAWING S-05. ALL PIPE HANGERS SHALL BE 221/S-05 WHERE POSSIBLE.

REV NO	DESCRIPTION	APP'D	DATE
1	SLUDGE PUMP PIPING MOD.	DJR	7/2/98

STATE OF TEXAS — DAVID J. ROSS — 68267 — REGISTERED PROFESSIONAL ENGINEER

CH2M HILL
7600 West Tidwell Road, Suite 400
Houston Tx 77040
713.462.0161

Binkley & Barfield, Inc.
Consulting Engineers
1710 Seamist Drive Houston, Texas 77008

ALMEDA SIMS SLUDGE PROCESSING FACILITY IMPROVEMENTS

GFS NO R-0298-04-3
FILE NO: 4289-2

BELT FILTER PRESS EQUIPMENT PIPING PLAN

CITY OF HOUSTON
DEPARTMENT OF PUBLIC WORKS AND ENGINEERING
ENGINEERING, CONSTRUCTION AND REAL ESTATE GROUP

SECTION APPROVALS

WATER ENGINEERING	TRAFFIC AND SIGNAL ENGINEERING
WASTEWATER ENGINEERING	STREET & BRIDGE ENGINEERING
STORM SEWER ENGINEERING	CONSTRUCTION

OTHER DEPARTMENTS

PLANNING AND DEVELOPMENT	SPONSOR DEPARTMENT

CITY ENGINEER — DATE

DIRECTOR OF PUBLIC WORKS AND ENGINEERING — DATE

SUBMITTED:	DESIGNED BY: HJK
SCALE: 3/16" = 1'-0"	DRAWN BY: RPD
DATE: JULY 1998	DWG NO: M10
SURVEY BY:	SHEET NO 25 OF 56 SHEETS
F B NO:	CITY DWG NO: 33007

CADD DWG FILE NO: F:/64301/M10.DWG

COHSTD.BDR

0 1 2 3 ORIGINAL SCALE IN INCHES FOR REDUCED PLANS

FILE DATE--OPERATOR: 06/24/97-AAA

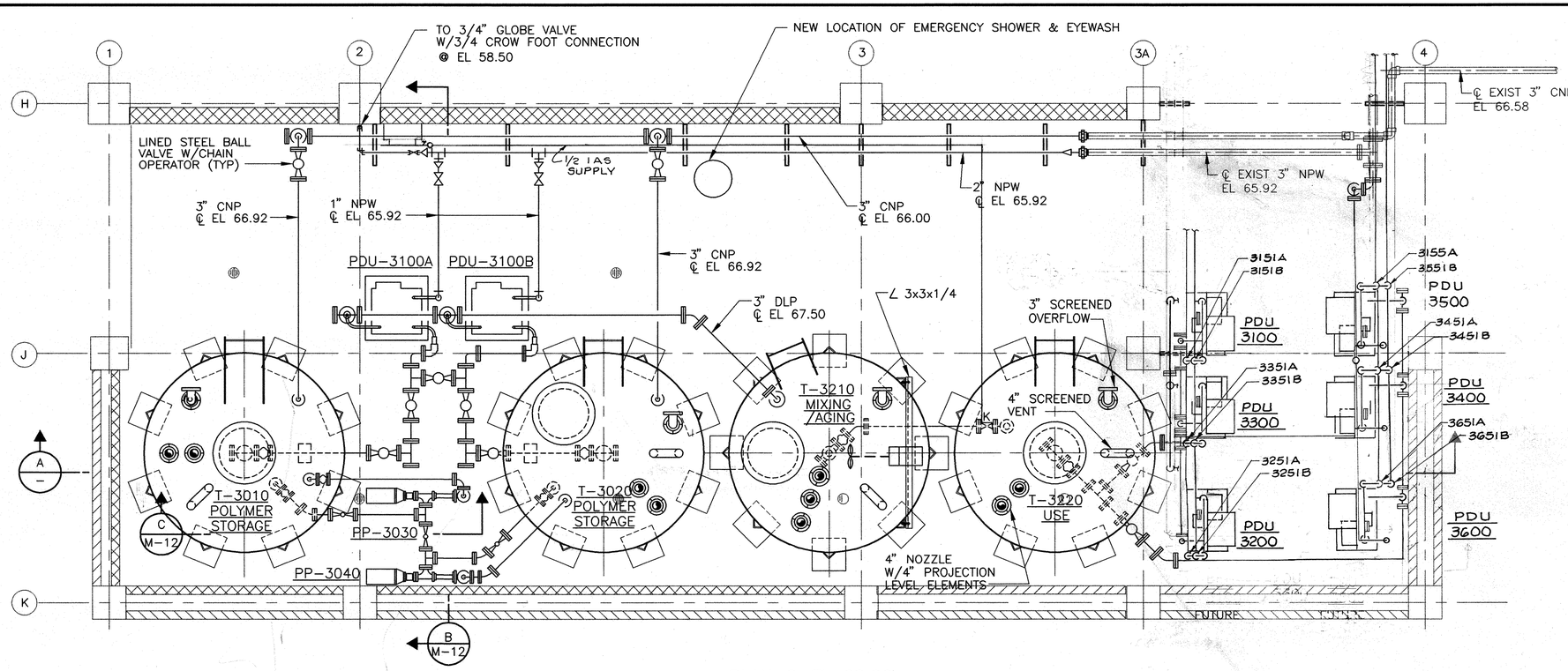

PLAN @ EL 68.00

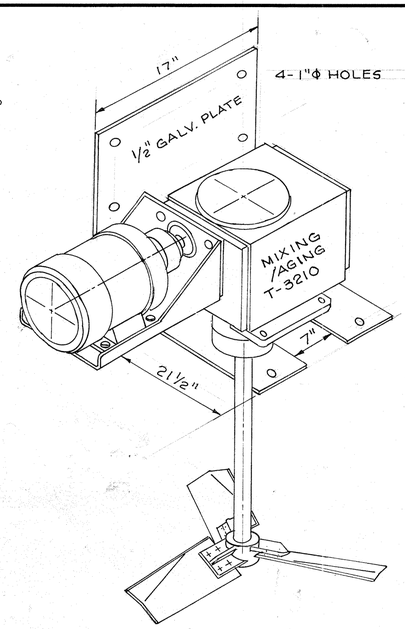

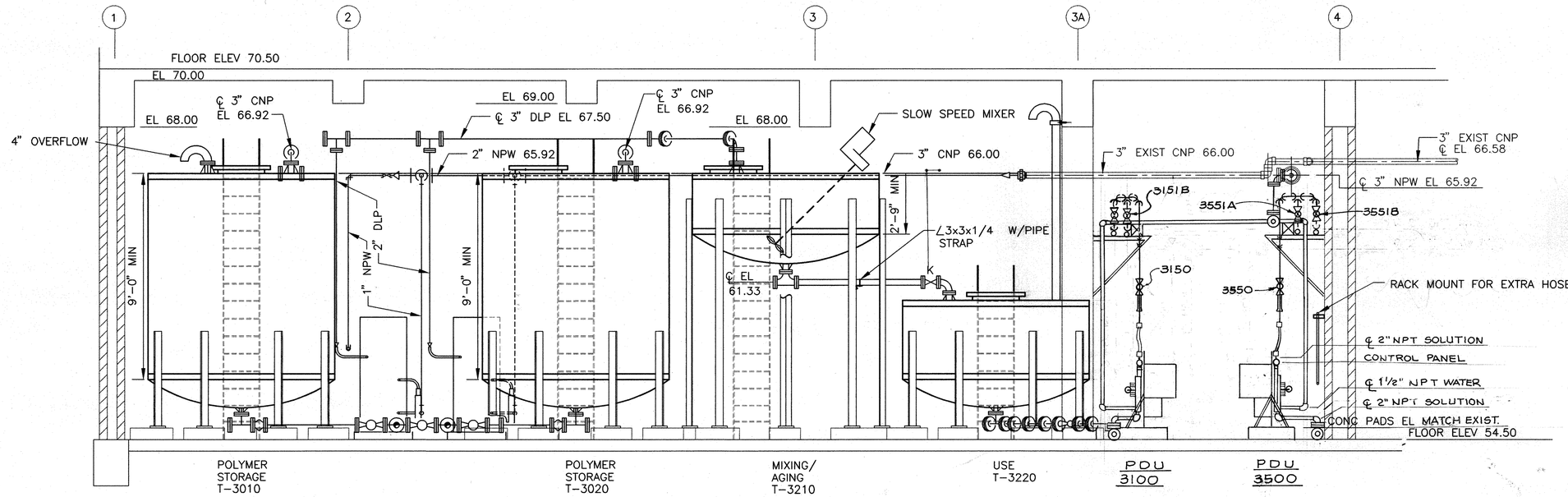

SECTION A
SCALE:

SEAL
STATE OF TEXAS
H. J. KJELLBERG
38055
REGISTERED PROFESSIONAL ENGINEER
6/30/97

CADD DWG FILE NO: 64300/M-11-11.DWG

COHSTD.BDR

0 1 2 3 ORIGINAL SCALE IN INCHES FOR REDUCED PLANS

REV NO	DESCRIPTION	APP'D	DATE

CH2M HILL
7600 West Tidwell Road, Suite 400
Houston Tx 77040
713.462.0161

Binkley & Barfield, Inc.
Consulting Engineers
1710 Seamist Drive Houston, Texas 77008

ALMEDA SIMS
SLUDGE PROCESSING FACILITY IMPROVEMENTS

GFS NO R-0298-04-3
FILE NO: 4289-2

POLYMER DILUTION SYSTEM
PLAN AND SECTION

CITY OF HOUSTON
DEPARTMENT OF PUBLIC WORKS AND ENGINEERING
ENGINEERING, CONSTRUCTION AND REAL ESTATE GROUP

SECTION APPROVALS

WATER ENGINEERING
TRAFFIC AND SIGNAL ENGINEERING
WASTEWATER ENGINEERING 7/1/97
STREET & BRIDGE ENGINEERING
STORM SEWER ENGINEERING
CONSTRUCTION 7/3/97

OTHER DEPARTMENTS

PLANNING AND DEVELOPMENT
SPONSOR DEPARTMENT

CITY ENGINEER 7/7/97 DATE
DIRECTOR OF PUBLIC WORKS AND ENGINEERING 7-8-97 DATE

SUBMITTED: XX
SCALE: 3/8 = 1'-0"
DATE: JUNE 1997
SURVEY BY: XX
F B NO:

DESIGNED BY: HJK
DRAWN BY: AAA
DWG NO: M-11
SHEET NO 26OF56 SHEETS

CITY DWG NO: 33007

FILE DATE:--OPERATOR: 06/24/97--AAA

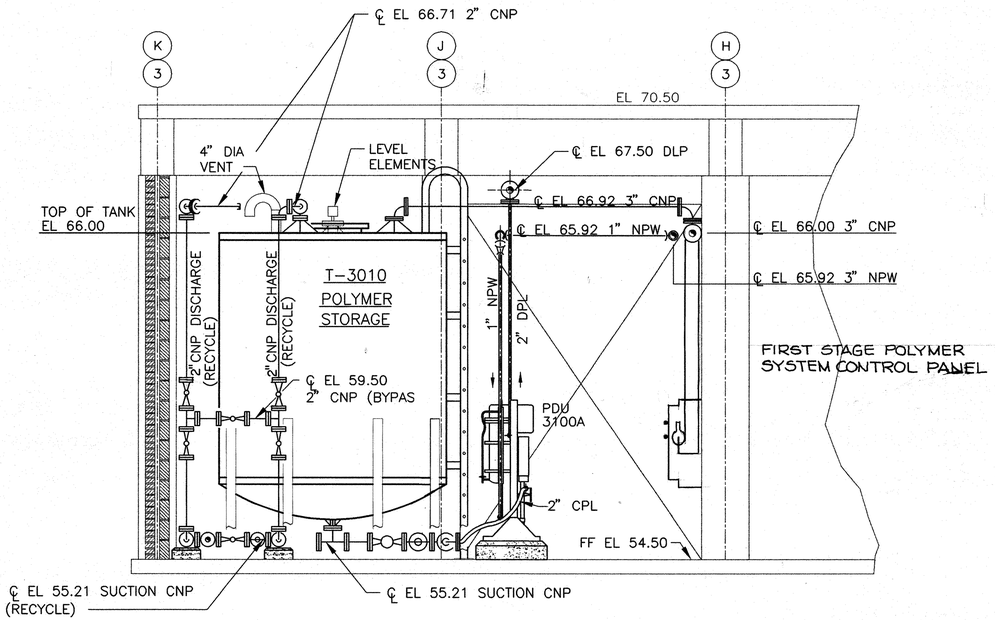

SECTION B
SCALE: 3/8" = 1'-0" M-11

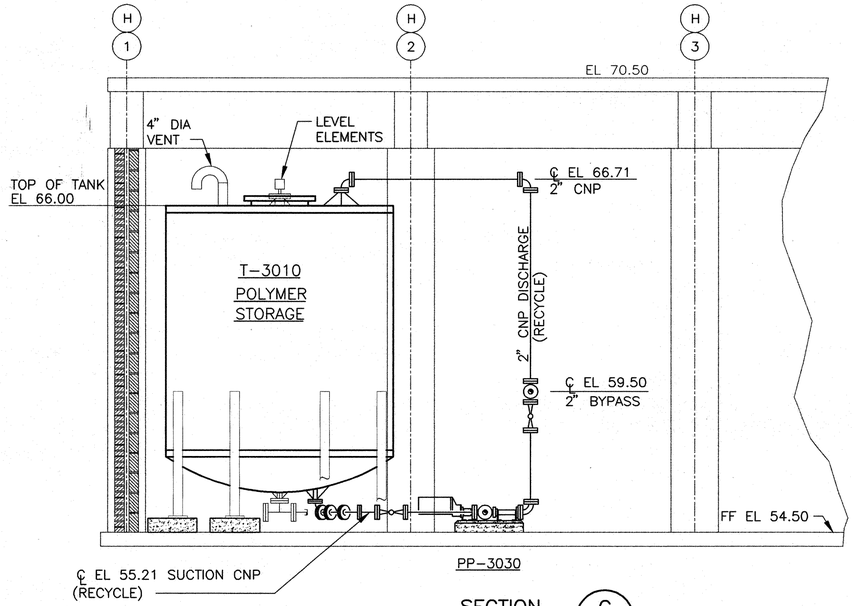

SECTION C
SCALE: 3/8" = 1'-0" M-11

SEAL

STATE OF TEXAS
H. J. KJELLBERG
38055
REGISTERED PROFESSIONAL ENGINEER

6/30/97

CADD DWG FILE NO: 64300/8070-M-12-12.DWG

COHSTD.BDR

0 1 2 3

ORIGINAL SCALE IN INCHES FOR REDUCED PLANS

REV NO	DESCRIPTION	APP'D	DATE

CH2M HILL
7600 West Tidwell Road, Suite 400
Houston Tx 77040
713.462.0161

Binkley & Barfield, Inc.
Consulting Engineers
1710 Seamist Drive Houston, Texas 77008

ALMEDA SIMS
SLUDGE PROCESSING FACILITY IMPROVEMENTS

GFS NO R-0298-04-3
FILE NO: 4289-2

POLYMER DILUTION SYSTEM SECTIONS

CITY OF HOUSTON
DEPARTMENT OF PUBLIC WORKS AND ENGINEERING
ENGINEERING, CONSTRUCTION AND REAL ESTATE GROUP

SECTION APPROVALS

WATER ENGINEERING	TRAFFIC AND SIGNAL ENGINEERING
WASTEWATER ENGINEERING 7/1/97	STREET & BRIDGE ENGINEERING
STORM SEWER ENGINEERING	CONSTRUCTION 7/3/97

OTHER DEPARTMENTS

PLANNING AND DEVELOPMENT	SPONSOR DEPARTMENT

CITY ENGINEER — DATE 7/7/97

DIRECTOR OF PUBLIC WORKS AND ENGINEERING — DATE 7-8-97

SUBMITTED:
SCALE: 3/8" = 1'-0"
DATE: JUNE 1997
SURVEY BY:
F B NO:

DESIGNED BY: HJK
DRAWN BY: AAA
DWG NO: M-12
SHEET NO 27 OF 56 SHEETS

CITY DWG NO: 33007

FILE DATE--OPERATOR-- 06/23/97-AAA

T-3210

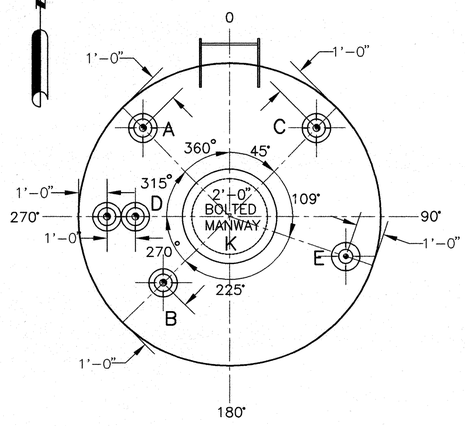

T-3010
POLYMER
STORAGE

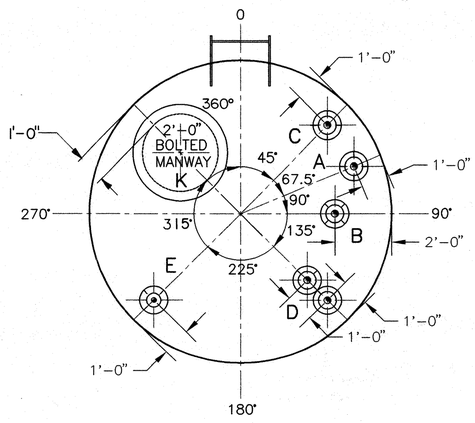

T-3020
POLYMER
STORAGE

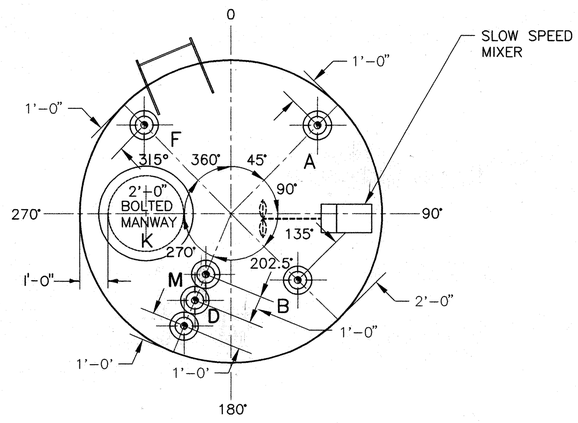

T-3210
MIXING/AGING

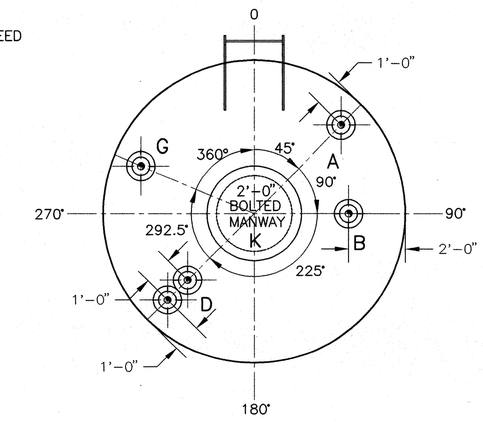

T-3220
USE

TANK TOP VIEW

SCALE: 1/2"= 1' -0"

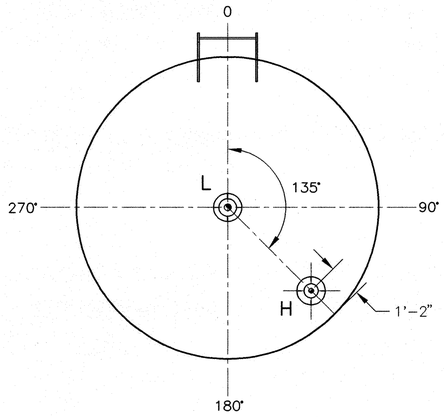

T-3010
POLYMER
STORAGE

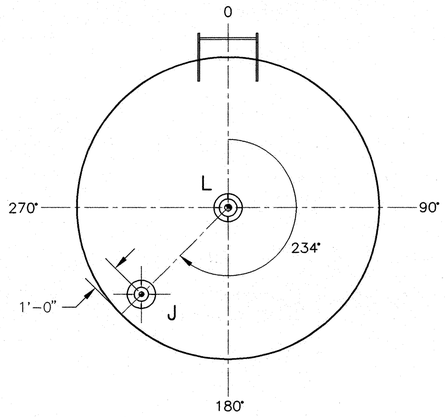

T-3020
POLYMER
STORAGE

TANK BOTTOM VIEW

SCALE: 1/2"= 1' -0"

TANK NOZZLE LOCATIONS			
TYPE	NOZZLE DESCRIPTION	SIZE	DISTANCE FROM TOP EDGE OF TANK
A	SCREENED OVERFLOW	3" NOZZLE W/4" PROJECTION	1'-0"
B	SCREENED VENT	4" U-TYPE VENT	2'-0"
C	STORAGE TANK FILL	3" NOZZLE W/5 1/2" PROJECTION	1'-0"
D	LEVEL ELEMENTS	2-4" NOZZLE W/4" PROJECTION	1'-0" & 2'-0"
E	RECYCLE DISCHARGE	2" NOZZLE W/4" PROJECTION	1'-0"
F	MIXING/AGING TANK FILL	3" NOZZLE W/4" PROJECTION	1'-0"
G	USE TANK FILL	3" NOZZLE W/4" PROJECTION	1'-0"
H	RECYCLE SUCTION	2" NOZZLE W/4" PROJECTION	1'-0"
J	RECYCLE SUCTION	2" NOZZLE W/4" PROJECTION	1'-0"
K	MANWAY	2'-0" DIAMETER	3'-0"
L	BOTTOM DISCHARGE	3" NOZZLE W/4" PROJECTION	CENTER OF TANK
M	LEVEL ELEMENT	1-4" NOZZLE W/4" PROJECTION	3'-0"

NOTES:

1. ALL TANKS SHALL HAVE A 3" NOZZLE W/4" PROJECTION LOCATED AT CENTER OF BOTTOM ASME STANDARD DISH.

SEAL

STATE OF TEXAS
H. J. KJELLBERG
38055
REGISTERED PROFESSIONAL ENGINEER
6/30/97

CADD DWG FILE NO: 64300/M-13DWG

COHSTD.BDR

0 1 2 3 ORIGINAL SCALE IN INCHES FOR REDUCED PLANS

REV NO	DESCRIPTION	APP'D	DATE

CH2M HILL
7600 West Tidwell Road, Suite 400
Houston Tx 77040
713.462.0161

Binkley & Barfield, Inc.
Consulting Engineers
1710 Seamist Drive Houston, Texas 77008

ALMEDA SIMS
SLUDGE PROCESSING FACILITY
IMPROVEMENTS

GFS NO R-0298-04-3
FILE NO: 4289-2

POLYMER DILUTION SYSTEM
TANK NOZZLE LOCATIONS
TOP AND BOTTOM VIEWS

CITY OF HOUSTON
DEPARTMENT OF PUBLIC WORKS AND ENGINEERING
ENGINEERING, CONSTRUCTION AND REAL ESTATE GROUP

SECTION APPROVALS

WATER ENGINEERING

TRAFFIC AND SIGNAL ENGINEERING

WASTEWATER ENGINEERING 7/1/97

STREET & BRIDGE ENGINEERING

STORM SEWER ENGINEERING

CONSTRUCTION 7/2/97

OTHER DEPARTMENTS

PLANNING AND DEVELOPMENT

SPONSOR DEPARTMENT

CITY ENGINEER 7/7/97 DATE

DIRECTOR OF PUBLIC WORKS AND ENGINEERING 7-8-97 DATE

SUBMITTED:
SCALE: 1/2" = 1'-0"
DATE: JUNE 1997
SURVEY BY:
F B NO:

DESIGNED BY: HJK
DRAWN BY: AAA
DWG NO: M-13
SHEET NO 28 OF 56 SHEETS

CITY DWG NO:
33007

FILE DATE-OPERATOR: 04/24/97-DVB

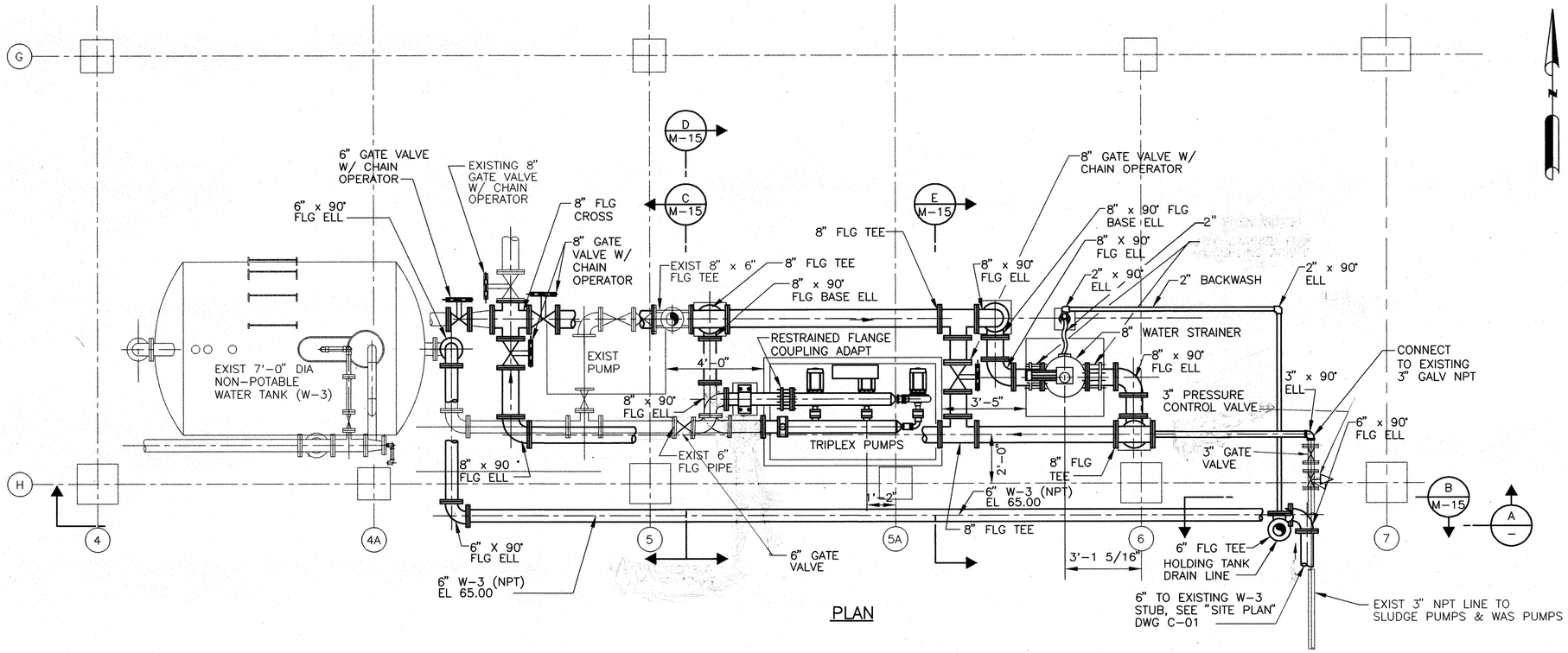

PLAN

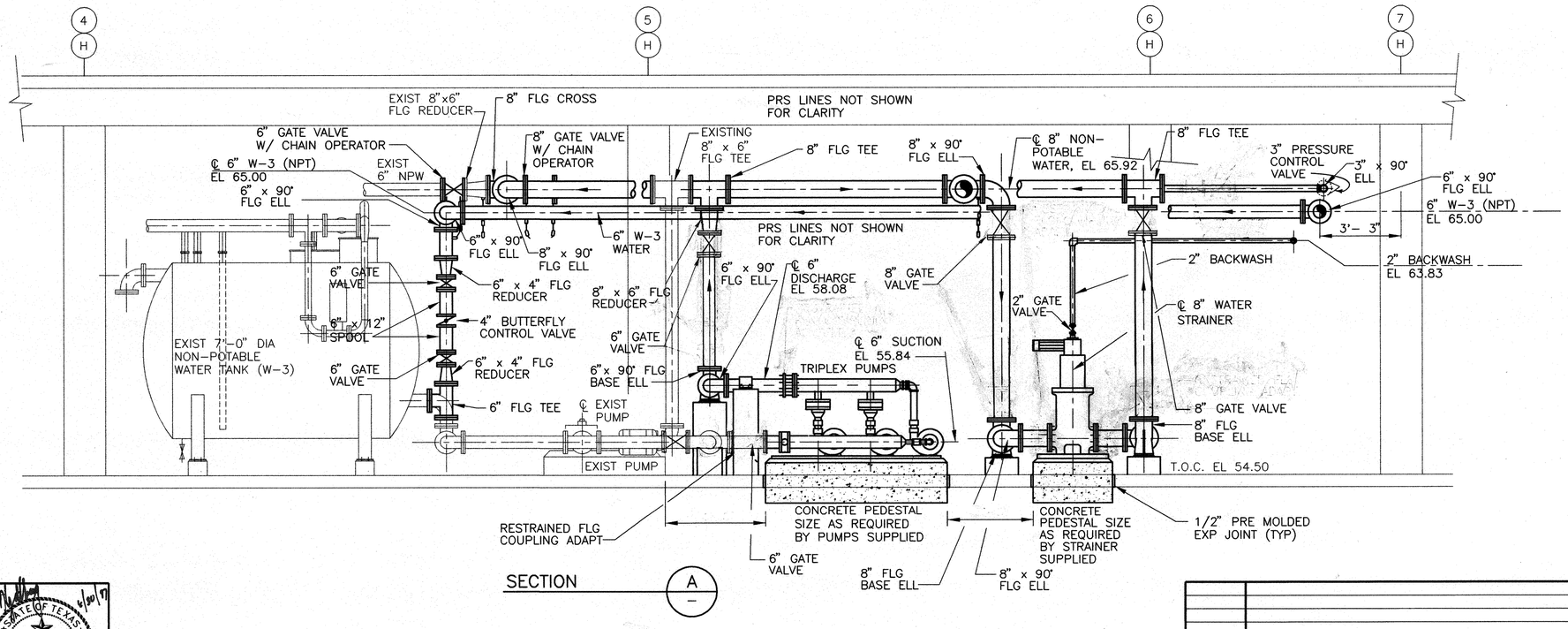

SECTION A

NOTE:

1. PIPE HANGERS AND SUPPORTS SHALL BE PER SPECIFICATIONS SECTION 15140 AND MISCELLANEOUS STANDARD DETAILS DRAWING S-05. ALL PIPE HANGERS SHALL BE 221/S-05 WHERE POSSIBLE.

SEAL

STATE OF TEXAS
H. J. KJELLBERG
38055
REGISTERED PROFESSIONAL ENGINEER
6/30/97

CADD DWG FILE NO: 64300/M14.DWG

COHSTD.BDR

0 1 2 3

ORIGINAL SCALE IN INCHES FOR REDUCED PLANS

REV NO	DESCRIPTION	APP'D	DATE

CH2M HILL
7600 West Tidwell Road, Suite 400
Houston Tx 77040
713.462.0161

Binkley & Barfield, Inc.
Consulting Engineers
1710 Seamist Drive Houston, Texas 77008

ALMEDA SIMS
SLUDGE PROCESSING FACILITY IMPROVEMENTS

GFS NO R-0298-04-3
FILE NO: 4289-2

NON POTABLE WATER SYSTEM PLAN AND SECTION

CITY OF HOUSTON
DEPARTMENT OF PUBLIC WORKS AND ENGINEERING
ENGINEERING, CONSTRUCTION AND REAL ESTATE GROUP

SECTION APPROVALS

WATER ENGINEERING	TRAFFIC AND SIGNAL ENGINEERING
WASTEWATER ENGINEERING 7/1/97	STREET & BRIDGE ENGINEERING
STORM SEWER ENGINEERING	CONSTRUCTION 7/8/97

OTHER DEPARTMENTS

PLANNING AND DEVELOPMENT	SPONSOR DEPARTMENT

CITY ENGINEER 7/7/97 DATE

DIRECTOR OF PUBLIC WORKS AND ENGINEERING 7-8-97 DATE

SUBMITTED:
SCALE: 3/8" = 1'-0"
DATE: JUNE 1997
SURVEY BY:
F B NO:

DESIGNED BY: HJK
DRAWN BY: FG
DWG NO: M-14
SHEET NO 29 OF 56 SHEETS

CITY DWG NO: 33007

FILE DATE--OPERATOR: 04/24/97--DVB

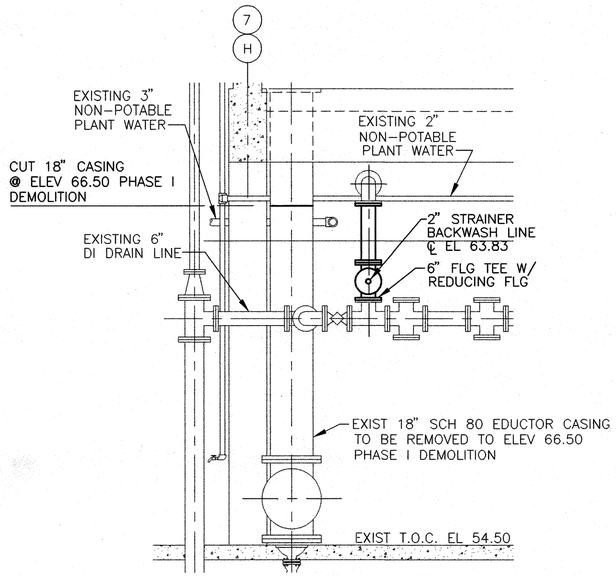

SECTION B M-14

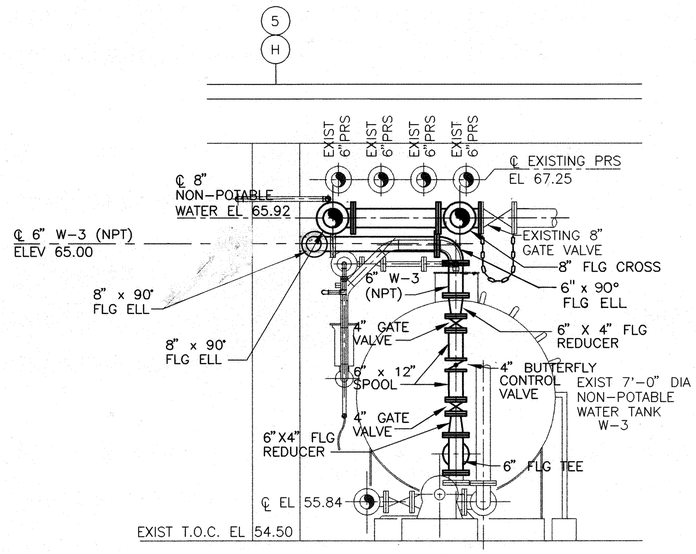

SECTION C M-14

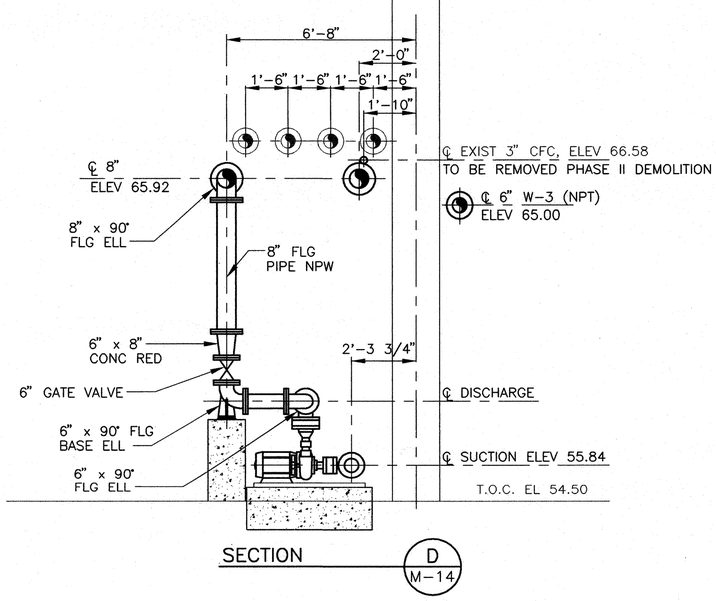

SECTION D M-14

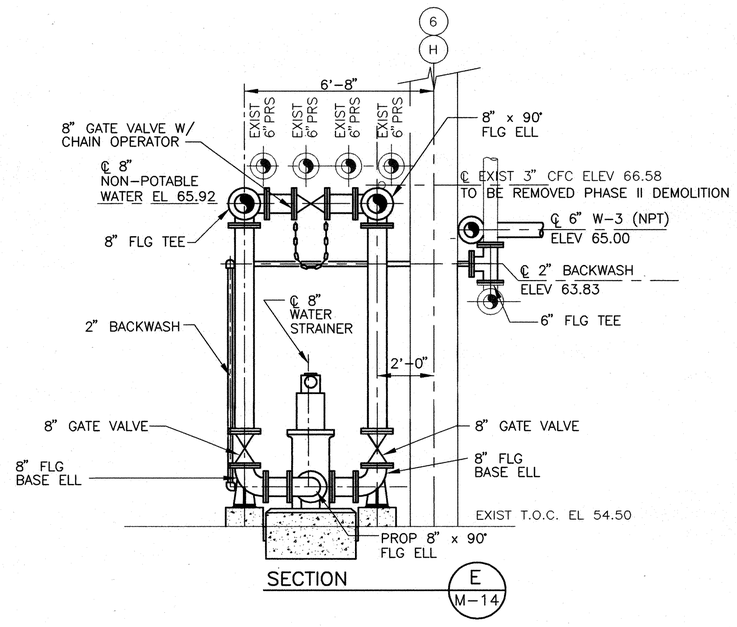

SECTION E M-14

NOTE:

1. PIPE HANGERS AND SUPPORTS SHALL BE PER SPECIFICATIONS SECTION 15140 AND MISCELLANEOUS STANDARD DETAILS DRAWING S-05. ALL PIPE HANGERS SHALL BE 221/S-05 WHERE POSSIBLE.

CH2M HILL
7600 West Tidwell Road, Suite 400
Houston Tx 77040
713.462.0161

Binkley & Barfield, Inc.
Consulting Engineers
1710 Seamist Drive Houston, Texas 77008

ALMEDA SIMS
SLUDGE PROCESSING FACILITY IMPROVEMENTS

GFS NO R-0298-04-3
FILE NO: 4289-2

NON POTABLE WATER SYSTEM SECTIONS

CITY OF HOUSTON
DEPARTMENT OF PUBLIC WORKS AND ENGINEERING
ENGINEERING, CONSTRUCTION AND REAL ESTATE GROUP

SECTION APPROVALS

WATER ENGINEERING	TRAFFIC AND SIGNAL ENGINEERING
WASTEWATER ENGINEERING 7/1/97	STREET & BRIDGE ENGINEERING
STORM SEWER ENGINEERING	CONSTRUCTION 7/3/97

OTHER DEPARTMENTS

PLANNING AND DEVELOPMENT	SPONSOR DEPARTMENT

CITY ENGINEER — DATE 7/7/97

DIRECTOR OF PUBLIC WORKS AND ENGINEERING — DATE 7-8-97

SEAL: H. J. KJELLBERG 38055 REGISTERED PROFESSIONAL ENGINEER STATE OF TEXAS

REV NO	DESCRIPTION	APP'D	DATE

SUBMITTED:
SCALE: 3/8" = 1'-0"
DATE: JUNE 1997
SURVEY BY:
F B NO:

DESIGNED BY: HJK
DRAWN BY: FG
DWG NO: M-15
SHEET NO 30 OF 56 SHEETS

CITY DWG NO: 33007

CADD DWG FILE NO: 64300/M15.DWG

COHSTD.BDR

0 1 2 3 ORIGINAL SCALE IN INCHES FOR REDUCED PLANS

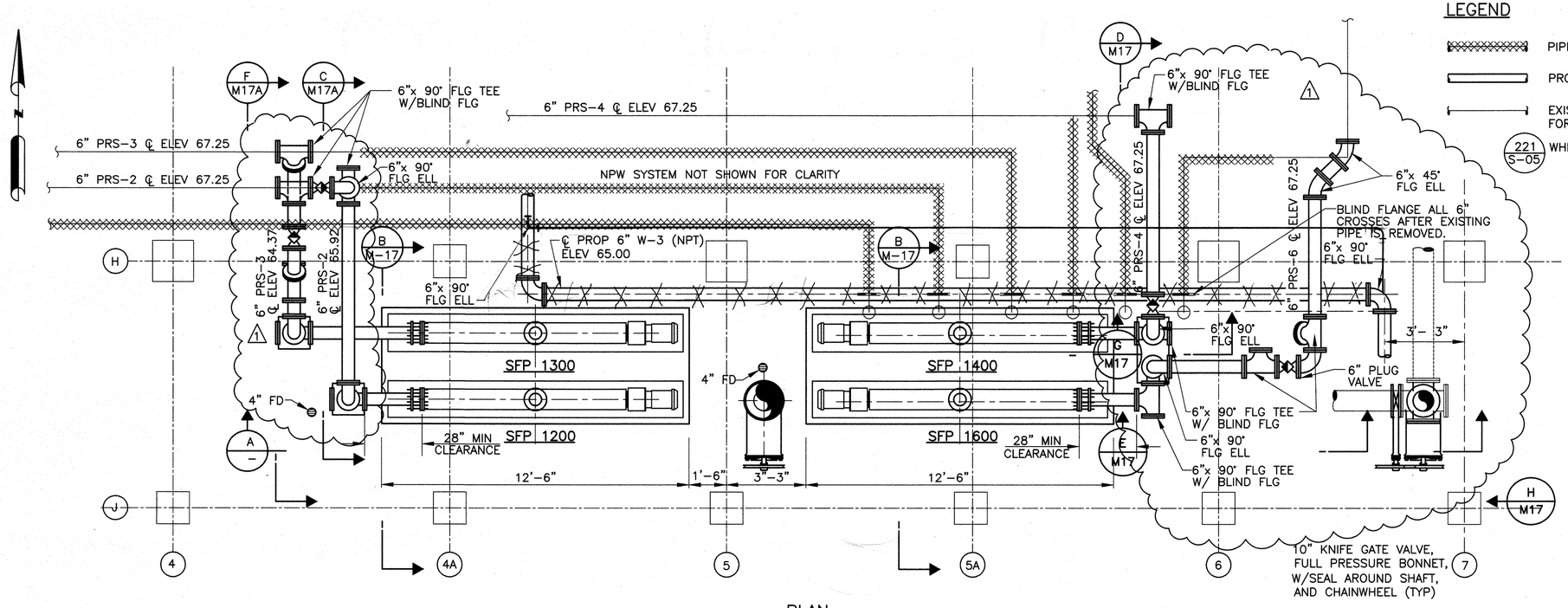

PLAN

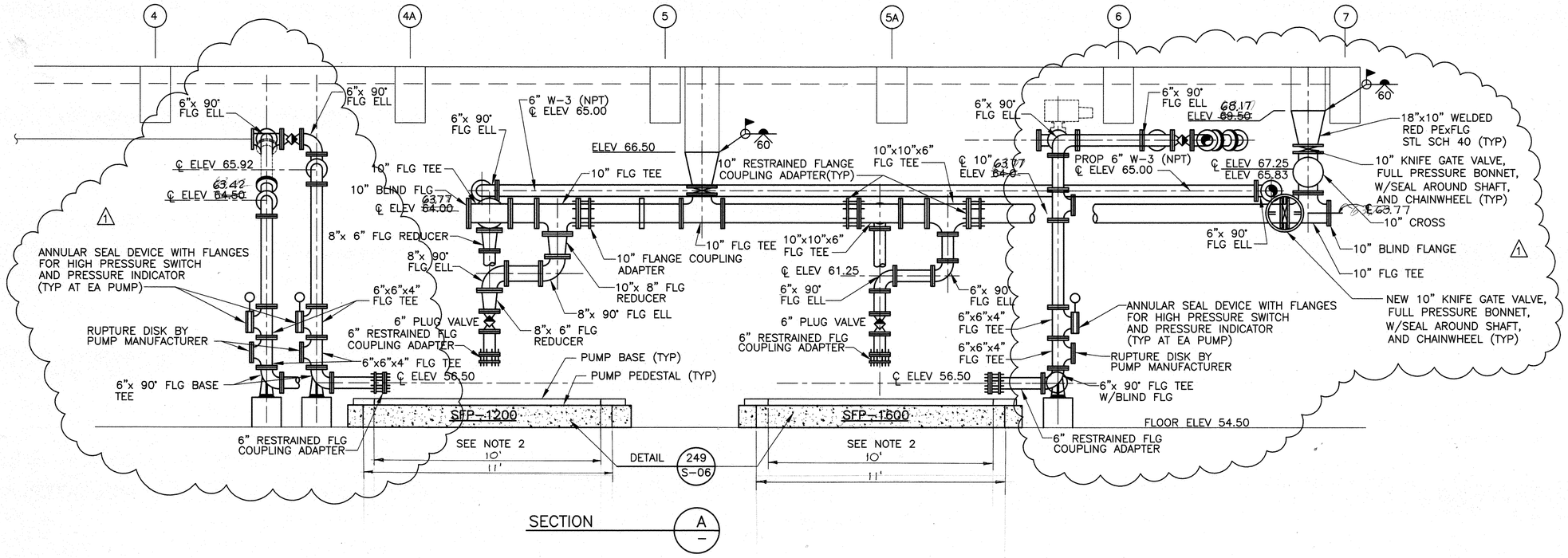

SECTION A –

LEGEND

- PIPE TO BE REMOVED
- PROPOSED PIPE
- EXISTING PIPE AVAILABLE FOR REUSE
- 221 S–05 WHERE POSSIBLE.

NOTE:

1. THE CONTRACTOR MAY USE SALVAGED CAST IRON PIPE & FITTINGS AFTER CLEANING AND RECEIVING APPROVAL BY THE CITY OF HOUSTON'S AUTHORIZED REPRESENTATIVE. CONTRACTOR SHALL BE RESPONSIBLE FOR FOR ALL NECESSARY ADAPTERS IF TWO OR MORE PIPING MATERIALS ARE USED IN THE PIPING SYSTEM.
2. ALTERNATE PIPING SYSTEMS ARE SHOWN FOR THE SUCTION PIPING TO PUMP NOS. 2, 3, 4 & 6. THE CONTRACTOR MAY ELECT TO USE EITHER SYSTEM AS SHOWN ON THE DRAWINGS OR MODIFICATION TO REDUCE FROM THE 10" SUCTION HEADER TO THE 6" PUMP SUCTION. SUBMITTALS WILL BE REQUIRED.
3. PIPE HANGERS AND SUPPORTS SHALL BE PER SPECIFICATIONS SECTION 15140 AND MISCELLANEOUS STANDARD DETAILS DRAWING S–05. ALL PIPE HANGERS SHALL BE

REV NO	DESCRIPTION	APP'D	DATE
1	SLUDGE PUMP PIPING MOD.	DJR	7/2/98

STATE OF TEXAS
DAVID J. ROSS
68267
REGISTERED PROFESSIONAL ENGINEER

CH2M HILL
7600 West Tidwell Road, Suite 400
Houston Tx 77040
713.462.0161

Binkley & Barfield, Inc.
Consulting Engineers
1710 Seamist Drive Houston, Texas 77008

ALMEDA SIMS
SLUDGE PROCESSING FACILITY IMPROVEMENTS

GFS NO R–0298–04–3
FILE NO: 4289–2

PROCESS SLUDGE PUMPS PLAN AND SECTION

CITY OF HOUSTON
DEPARTMENT OF PUBLIC WORKS AND ENGINEERING
ENGINEERING, CONSTRUCTION AND REAL ESTATE GROUP

SECTION APPROVALS

WATER ENGINEERING	TRAFFIC AND SIGNAL ENGINEERING
WASTEWATER ENGINEERING	STREET & BRIDGE ENGINEERING
STORM SEWER ENGINEERING	CONSTRUCTION

OTHER DEPARTMENTS

PLANNING AND DEVELOPMENT	SPONSOR DEPARTMENT

CITY ENGINEER — DATE

DIRECTOR OF PUBLIC WORKS AND ENGINEERING — DATE

SUBMITTED:
SCALE: 3/8" = 1'–0"
DATE: JULY 1998
SURVEY BY:
F B NO:

DESIGNED BY: HJK
DRAWN BY: RPD
DWG NO: M16
SHEET NO 31 OF 56 SHEETS
CITY DWG NO: 33007

CADD DWG FILE NO. F:/64301/M16R1.DWG

COHSTD.BDR

0 1 2 3 ORIGINAL SCALE IN INCHES FOR REDUCED PLANS

FILE DATE--OPERATOR: 05/16/97--AAA

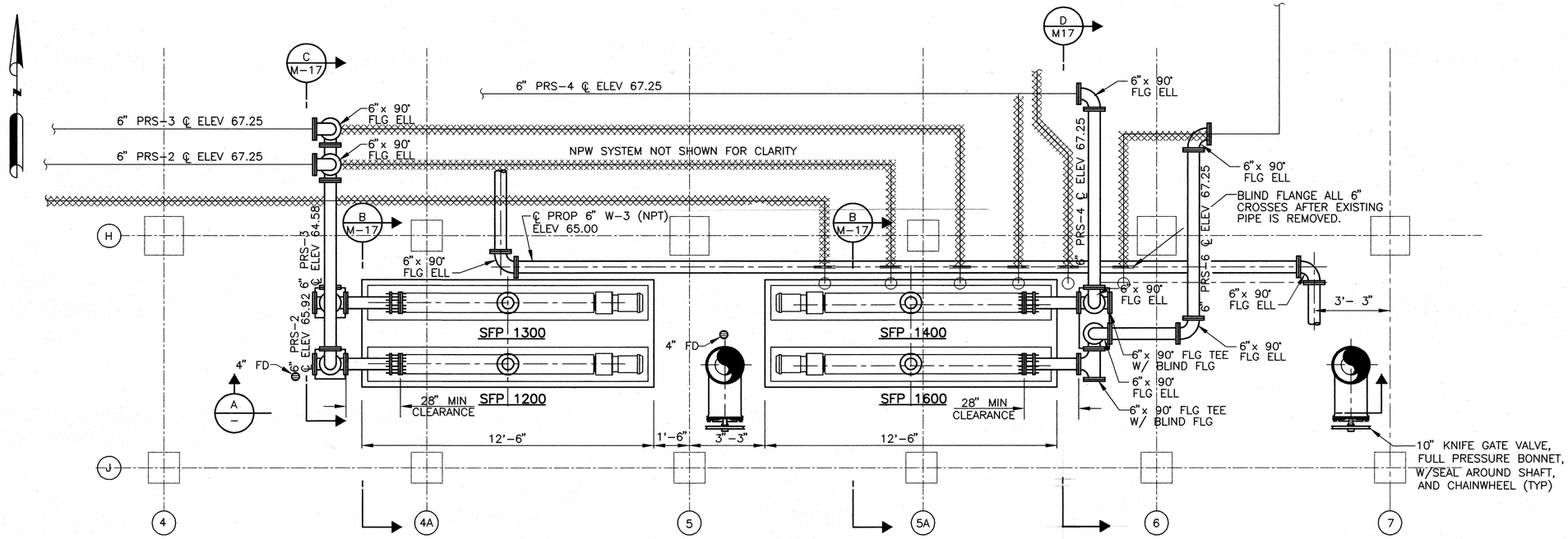

PLAN

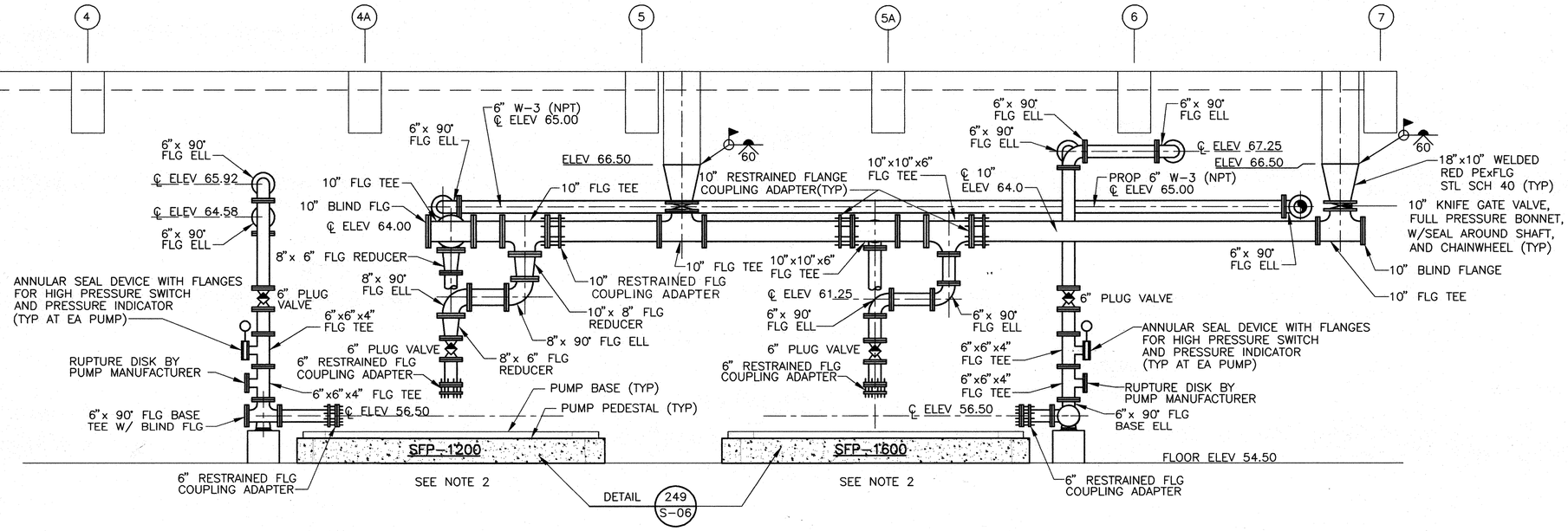

SECTION A –

NOTE:

1. THE CONTRACTOR MAY USE SALVAGED DUCTILE IRON PIPE & FITTINGS AFTER CLEANING AND RECEIVING APPROVAL BY THE CITY OF HOUSTON'S AUTHORIZED REPRESENTATIVE. CONTRACTOR SHALL BE RESPONSIBLE FOR FOR ALL NECESSARY ADAPTERS IF TWO OR MORE PIPING MATERIALS ARE USED IN THE PIPING SYSTEM.
2. ALTERNATE PIPING SYSTEMS ARE SHOWN FOR THE SUCTION PIPING TO PUMP NOS. 2, 3, 4 & 6. THE CONTRACTOR MAY ELECT TO USE EITHER SYSTEM AS SHOWN ON THE DRAWINGS OR MODIFICATION TO REDUCE FROM THE 10" SUCTION HEADER TO THE 6" PUMP SUCTION. SUBMITTALS WILL BE REQUIRED.
3. PIPE HANGERS AND SUPPORTS SHALL BE PER SPECIFICATIONS SECTION 15140 AND MISCELLANEOUS STANDARD DETAILS DRAWING S-05. ALL PIPE HANGERS SHALL BE 221 S-05 WHERE POSSIBLE.

LEGEND

- PIPE TO BE REMOVED
- PROPOSED PIPE
- EXISTING PIPE AVAILABLE FOR REUSE

CH2M HILL
7600 West Tidwell Road, Suite 400
Houston Tx 77040
713.462.0161

Binkley & Barfield, Inc.
Consulting Engineers
1710 Seamist Drive Houston, Texas 77008

ALMEDA SIMS
SLUDGE PROCESSING FACILITY IMPROVEMENTS

GFS NO R-0298-04-3
FILE NO: 4289-2

PROCESS SLUDGE PUMPS PLAN AND SECTION

CITY OF HOUSTON
DEPARTMENT OF PUBLIC WORKS AND ENGINEERING
ENGINEERING, CONSTRUCTION AND REAL ESTATE GROUP

SECTION APPROVALS

WATER ENGINEERING	TRAFFIC AND SIGNAL ENGINEERING
WASTEWATER ENGINEERING 7/1/97	STREET & BRIDGE ENGINEERING
STORM SEWER ENGINEERING	CONSTRUCTION 7/3/97

OTHER DEPARTMENTS

PLANNING AND DEVELOPMENT	SPONSOR DEPARTMENT

CITY ENGINEER 7/7/97 DATE

DIRECTOR OF PUBLIC WORKS AND ENGINEERING 7-8-97 DATE

SEAL: H. J. KJELLBERG 38055 REGISTERED PROFESSIONAL ENGINEER STATE OF TEXAS 6/30/97

REV NO	DESCRIPTION	APP'D	DATE

SUBMITTED:
SCALE: 3/8" = 1"-0"
DATE: JUNE 1997
SURVEY BY:
F B NO:

DESIGNED BY: HJK
DRAWN BY: RPD
DWG NO: M-16
SHEET NO 31 OF 56 SHEETS
CITY DWG NO: 33007

CADD DWG FILE NO: 64300/M16.DWG

COHSTD.BDR

0 1 2 3 ORIGINAL SCALE IN INCHES FOR REDUCED PLANS

FILE DATE--OPERATOR: 06/24/97--AA

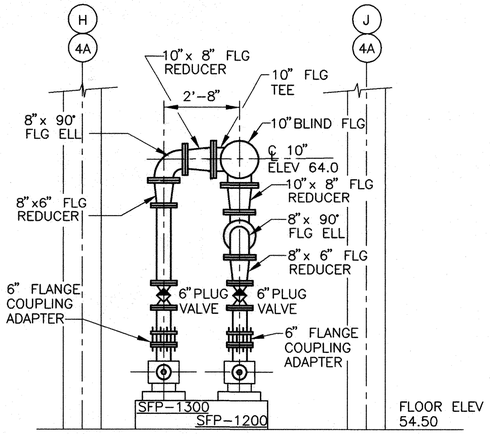

PUMP SUCTION PIPING

PUMPS 2,3,4,&6 USING STANDARD FITTING & CONCENTRIC REDUCERS TO PUMP INLETS 2,3,4,&6

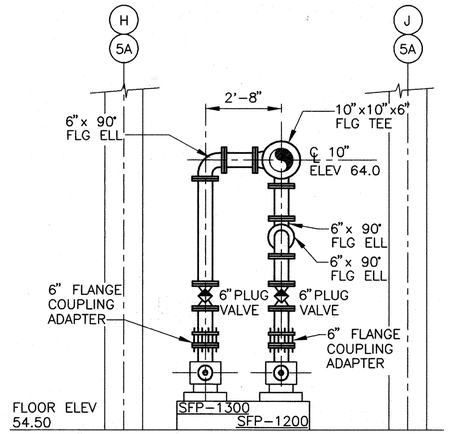

ALTERNATE PUMP SUCTION PIPING

ALTERNATE PIPING USING REDUCING TEES AND 6" PIPE FROM TEES TO PUMP INLETS 2,3,4,&6

SECTION B
SCALE: 3/8"=1'-0"
M-16

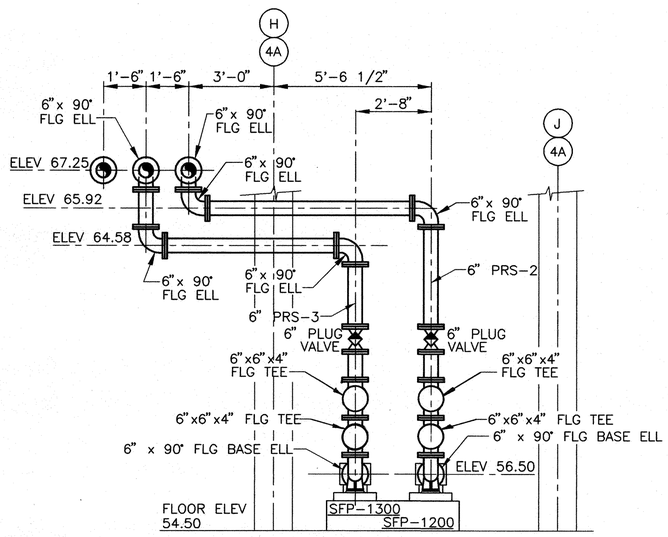

SECTION C
SCALE: 3/8"=1'-0"
M-16

PUMP DISCHARGE PIPING

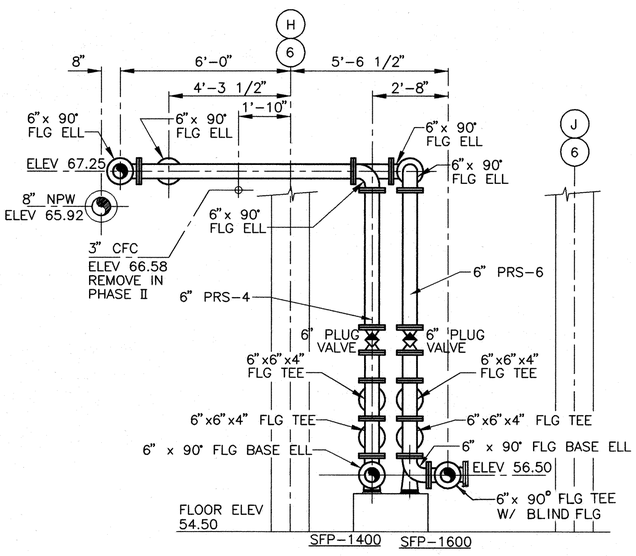

SECTION D
SCALE: 3/8"=1'-0"
M16

PUMP DISCHARGE PIPING

NOTE:

1. PIPE HANGERS AND SUPPORTS SHALL BE PER SPECIFICATIONS SECTION 15140 AND MISCELLANEOUS STANDARD DETAILS DRAWING S-05. ALL PIPE HANGERS SHALL BE (221/S-05) WHERE POSSIBLE.

CH2M HILL
7600 West Tidwell Road, Suite 400
Houston Tx 77040
713.462.0161

Binkley & Barfield, Inc.
Consulting Engineers
1710 Seamist Drive Houston, Texas 77008

ALMEDA SIMS
SLUDGE PROCESSING FACILITY IMPROVEMENTS

GFS NO R-0298-04-3
FILE NO: 4289-2

PROCESS SLUDGE PUMPS SECTIONS AND DETAILS

CITY OF HOUSTON
DEPARTMENT OF PUBLIC WORKS AND ENGINEERING
ENGINEERING, CONSTRUCTION AND REAL ESTATE GROUP

SECTION APPROVALS

WATER ENGINEERING	TRAFFIC AND SIGNAL ENGINEERING
7/1/97	
WASTEWATER ENGINEERING	STREET & BRIDGE ENGINEERING
	7/2/97
STORM SEWER ENGINEERING	CONSTRUCTION

OTHER DEPARTMENTS

PLANNING AND DEVELOPMENT	SPONSOR DEPARTMENT

CITY ENGINEER — DATE 7/7/97

DIRECTOR OF PUBLIC WORKS AND ENGINEERING — DATE 7-8-97

REVISED 6/30/97

STATE OF TEXAS
H. J. KJELLBERG
38055
REGISTERED PROFESSIONAL ENGINEER

REV NO	DESCRIPTION	APP'D	DATE

SUBMITTED:
SCALE: 3/8" = 1'-0"
DATE: JUNE 1997
SURVEY BY:
F B NO:

DESIGNED BY: HJK
DRAWN BY: RPD
DWG NO: M-17
SHEET NO 32 OF 56 SHEETS

CITY DWG NO: 33007

CADD DWG FILE NO: 64300/M17.DWG

COHSTD.BDR

0 1 2 3 ORIGINAL SCALE IN INCHES FOR REDUCED PLANS

FILE DATE:—OPERATOR: 18

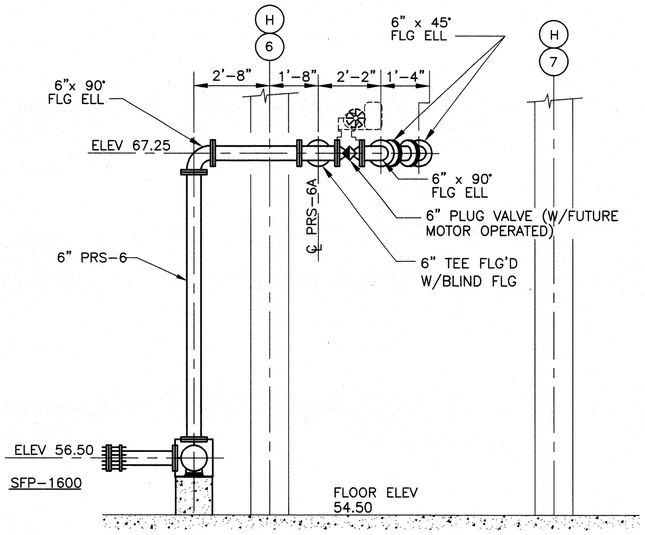

SECTION E M16 — SCALE: 3/8"=1'-0"

1

PUMP DISCHARGE PIPING

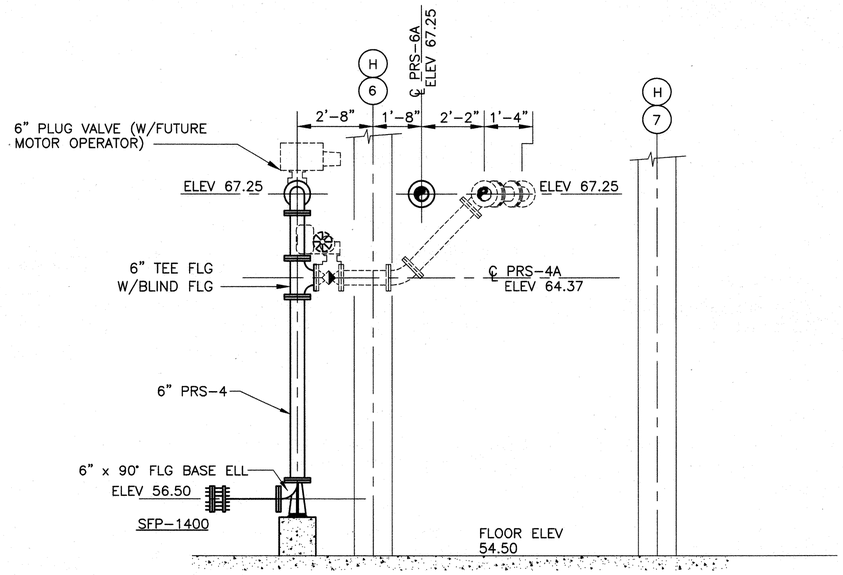

SECTION G M16 — SCALE: 3/8"=1'-0"

1

PUMP DISCHARGE PIPING

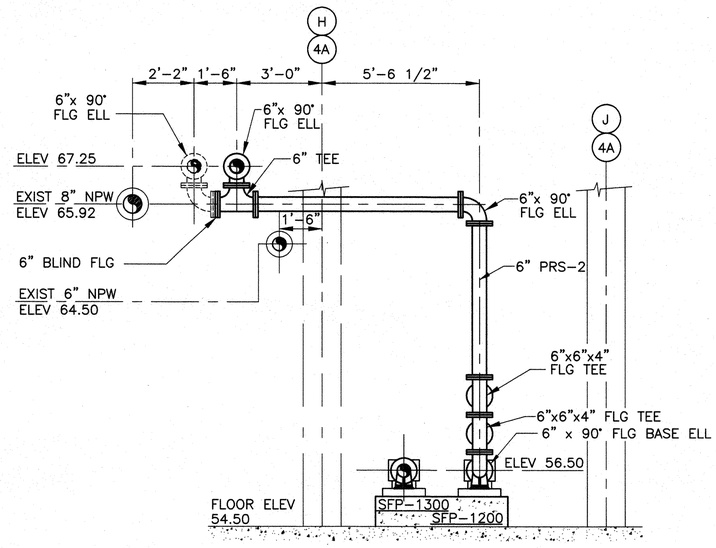

SECTION C M16 — SCALE: 3/8"=1'-0"

1

PUMP DISCHARGE PIPING

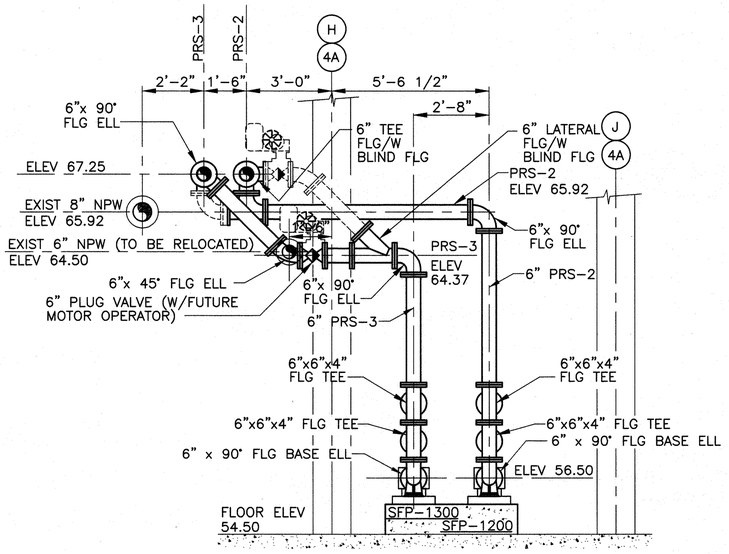

SECTION F M16 — SCALE: 3/8"=1'-0"

1

PUMP DISCHARGE PIPING

REV NO	DESCRIPTION	APP'D	DATE
1	SLUDGE PUMP PIPING MOD.	DJR	7/2/98

SEAL

SEAL

STATE OF TEXAS
DAVID J. ROSS
68267
REGISTERED PROFESSIONAL ENGINEER

CH2M HILL
7600 West Tidwell Road, Suite 400
Houston Tx 77040
713.462.0161

Binkley & Barfield, Inc.
Consulting Engineers
1710 Seamist Drive Houston, Texas 77008

ALMEDA SIMS
SLUDGE PROCESSING FACILITY IMPROVEMENTS

GFS NO R-0000-00-0
FILE NO: 0000-0

PROCESS SLUDGE PUMPS SECTIONS AND DETAILS

CITY OF HOUSTON

DEPARTMENT OF PUBLIC WORKS AND ENGINEERING
ENGINEERING, CONSTRUCTION AND REAL ESTATE GROUP

WATER ENGINEERING | TRAFFIC AND SIGNAL ENGINEERING

WASTEWATER ENGINEERING | STREET & BRIDGE ENGINEERING

STORMWATER ENGINEERING | CONSTRUCTION

OTHER DEPARTMENT

PLANNING AND DEVELOPMENT | SPONSOR DEPARTMENT

CITY ENGINEER — DATE

DIRECTOR OF PUBLIC WORKS AND ENGINEERING — DATE

SUBMITTED: SUBMIT
SCALE: 3/8" = 1'-0"
DATE: JULY 1998
SURVEY BY:
F B NO:

DESIGNED BY: DJR
DRAWN BY: AAA
DWG. NO. : M17A
SHT NO 32A of 56 SHTS
CITY DWG NO: 33007

CADD DWG FILE NO. F:\64301\M17A.DWG

COHSTD.BDR

0 1 2 3 ORIGINAL SCALE IN INCHES FOR REDUCED PLANS

F:/64301/M17R1.DWG/7/06/98/RPD

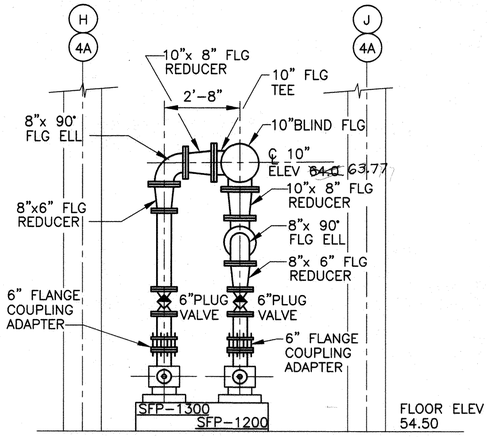

PUMP SUCTION PIPING

PUMPS 2,3,4,&6 USING STANDARD FITTING & CONCENTRIC REDUCERS TO PUMP INLETS 2,3,4,&6

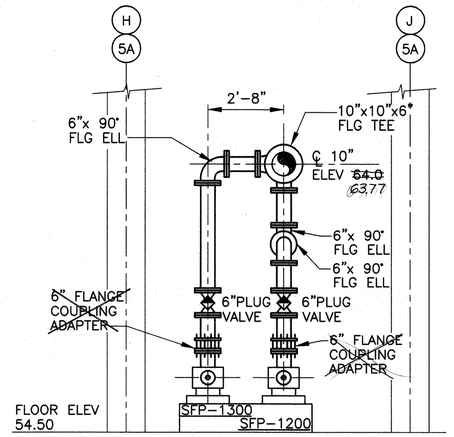

ALTERNATE PUMP SUCTION PIPING

ALTERNATE PIPING USING REDUCING TEES AND 6" PIPE FROM TEES TO PUMP INLETS 2,3,4,&6

SECTION B / M16
SCALE: 3/8"=1'-0"

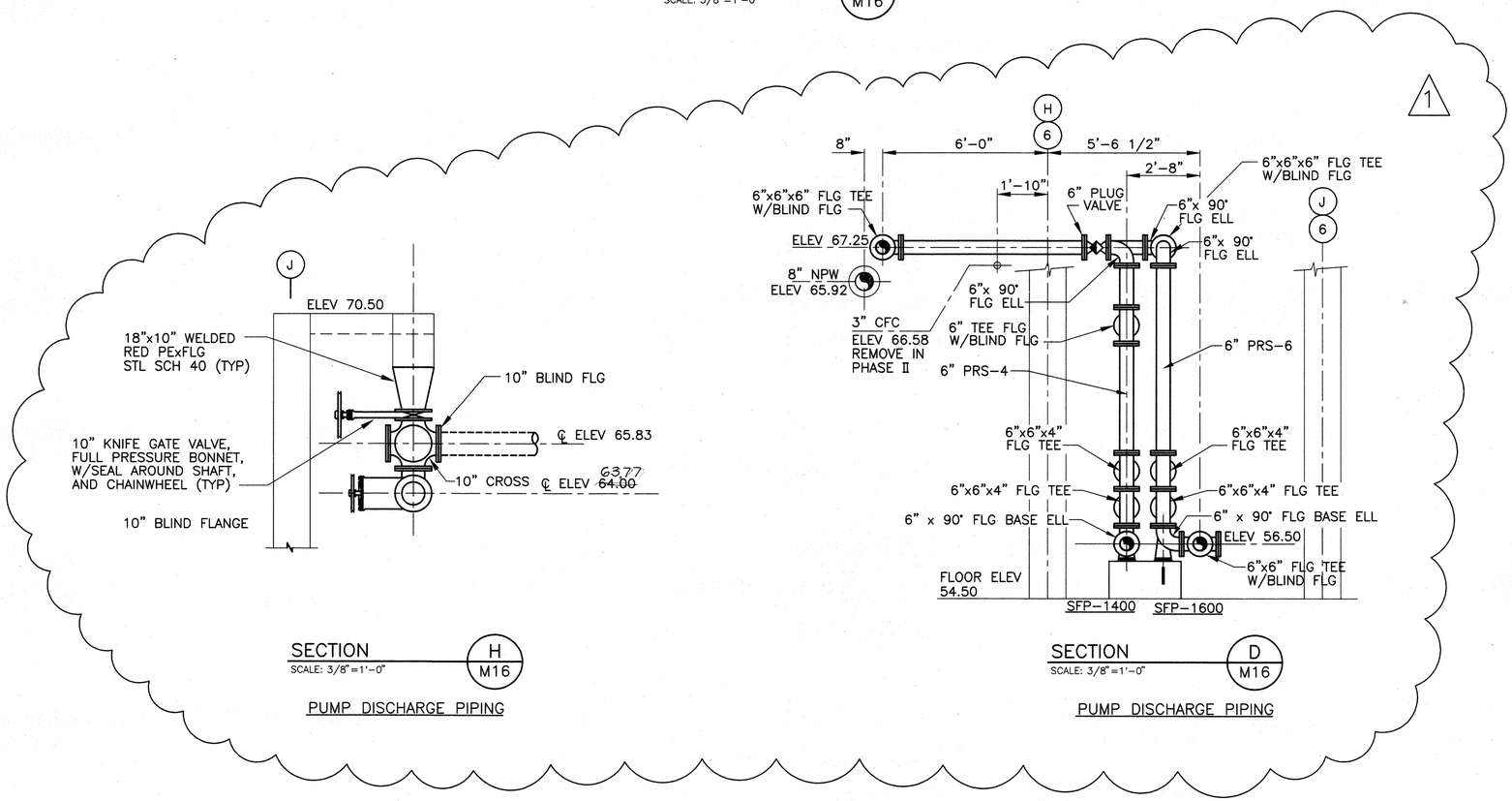

SECTION H / M16
SCALE: 3/8"=1'-0"

PUMP DISCHARGE PIPING

SECTION D / M16
SCALE: 3/8"=1'-0"

PUMP DISCHARGE PIPING

NOTE:

1. PIPE HANGERS AND SUPPORTS SHALL BE PER SPECIFICATIONS SECTION 15140 AND MISCELLANEOUS STANDARD DETAILS DRAWING S-05. ALL PIPE HANGERS SHALL BE (221 / S-05) WHERE POSSIBLE.

REV NO	DESCRIPTION	APP'D	DATE
1	SLUDGE PUMP PIPING MOD.	DJR	7/2/98

STATE OF TEXAS
DAVID J. ROSS
68267
REGISTERED PROFESSIONAL ENGINEER

CH2M HILL
7600 West Tidwell Road, Suite 400
Houston Tx 77040
713.462.0161

Binkley & Barfield, Inc.
Consulting Engineers
1710 Seamist Drive Houston, Texas 77008

ALMEDA SIMS
SLUDGE PROCESSING FACILITY IMPROVEMENTS

GFS NO R-0298-04-3
FILE NO: 4289-2

PROCESS SLUDGE PUMPS SECTIONS AND DETAILS

CITY OF HOUSTON
DEPARTMENT OF PUBLIC WORKS AND ENGINEERING
ENGINEERING, CONSTRUCTION AND REAL ESTATE GROUP

SECTION APPROVALS

WATER ENGINEERING	TRAFFIC AND SIGNAL ENGINEERING
WASTEWATER ENGINEERING	STREET & BRIDGE ENGINEERING
STORM SEWER ENGINEERING	CONSTRUCTION

OTHER DEPARTMENTS

PLANNING AND DEVELOPMENT	SPONSOR DEPARTMENT

CITY ENGINEER — DATE

DIRECTOR OF PUBLIC WORKS AND ENGINEERING — DATE

SUBMITTED: SUBMIT	DESIGNED BY: HJK
SCALE: 3/8" = 1'-0"	DRAWN BY: RPD
DATE: JULY 1998	DWG NO: **M17**
SURVEY BY:	SHEET NO 32 OF 56 SHEETS
F B NO:	**CITY DWG NO: 33007**

CADD DWG FILE NO: F:/64301/M17.DWG

COHSTD.BDR

0 1 2 3 ORIGINAL SCALE IN INCHES FOR REDUCED PLANS

FILE DATE--OPERATOR: 05/16/97--AAA

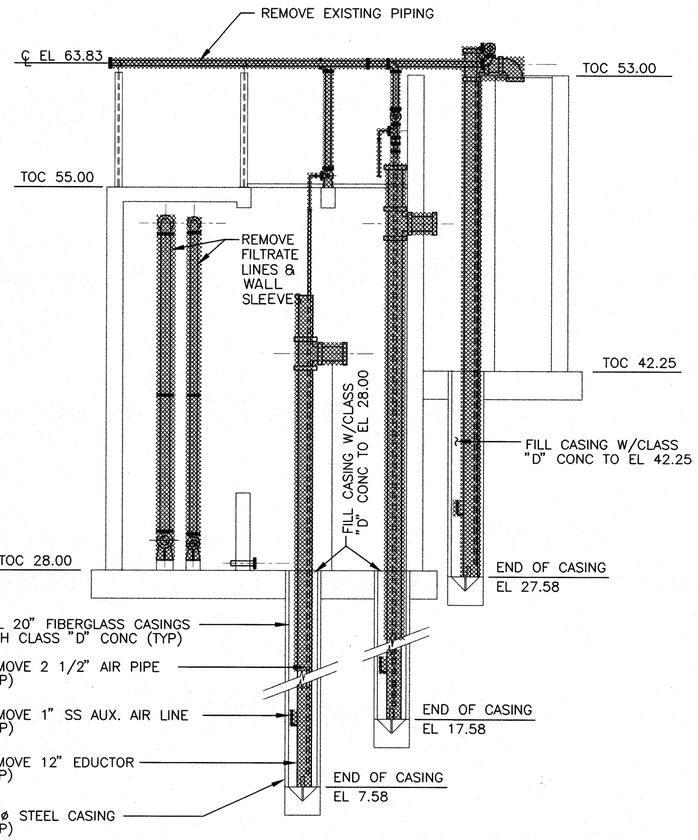

PIPING REMOVAL

SECTIONAL VIEW

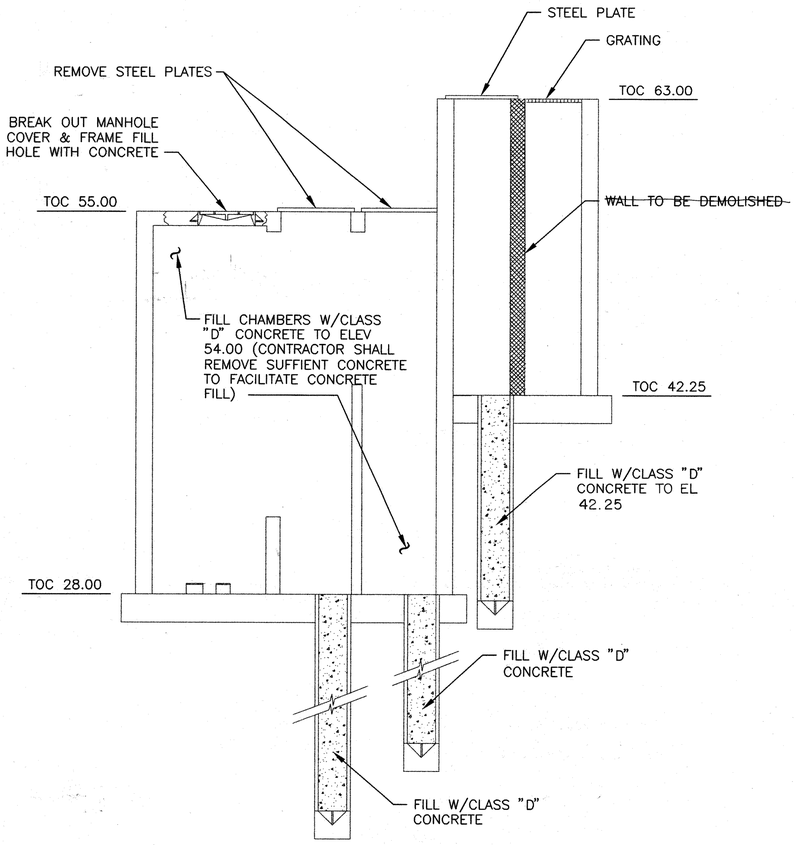

DEMOLITON PLAN

SECTIONAL VIEW

NOTES:

1. SEE DWG M-19 FOR PLAN VIEW.

LEGEND

AREA TO BE DEMOLISHED AND/OR REMOVED

CH2M HILL
7600 West Tidwell Road, Suite 400
Houston Tx 77040
713.462.0161

Binkley & Barfield, Inc.
Consulting Engineers
1710 Seamist Drive Houston, Texas 77008

ALMEDA SIMS
SLUDGE PROCESSING FACILITY
IMPROVEMENTS

GFS NO R-0298-04-3
FILE NO: 4289-2

FILTRATE SEAL PIT
MODIFICATIONS
SECTIONAL VIEWS

CITY OF HOUSTON
DEPARTMENT OF PUBLIC WORKS AND ENGINEERING
ENGINEERING, CONSTRUCTION AND REAL ESTATE GROUP

SECTION APPROVALS

WATER ENGINEERING	TRAFFIC AND SIGNAL ENGINEERING
WASTEWATER ENGINEERING 7/1/97	STREET & BRIDGE ENGINEERING
STORM SEWER ENGINEERING	CONSTRUCTION 7/2/97

OTHER DEPARTMENTS

PLANNING AND DEVELOPMENT	SPONSOR DEPARTMENT

CITY ENGINEER 7/7/97 DATE

DIRECTOR OF PUBLIC WORKS AND ENGINEERING 7-8-97 DATE

SEAL: 4/30/97
STATE OF TEXAS
H. J. KJELLBERG
38055
REGISTERED PROFESSIONAL ENGINEER

CADD DWG FILE NO: 64300/M18.DWG

COHSTD.BDR

0 1 2 3 ORIGINAL SCALE IN INCHES FOR REDUCED PLANS

REV NO	DESCRIPTION	APP'D	DATE

SUBMITTED:
SCALE: 3/16 = 1'-0"
DATE: JUNE 1997
SURVEY BY:
F B NO:

DESIGNED BY: HJK
DRAWN BY: FG
DWG NO: M-18
SHEET NO 33 OF 56 SHEETS
CITY DWG NO: 33007

FILE DATE--OPERATOR: 06/25/97--AA

NOTES:

1. BREAK OUT HOLES IN BOTH EXISTING WALLS AND EMBED THE W6x9 W/EPOXY GROUT.
2. BREAK OUT CONCRETE IN EXISTING WALL AND EMBED 16" WALL PIPE W/EPOXY GROUT.

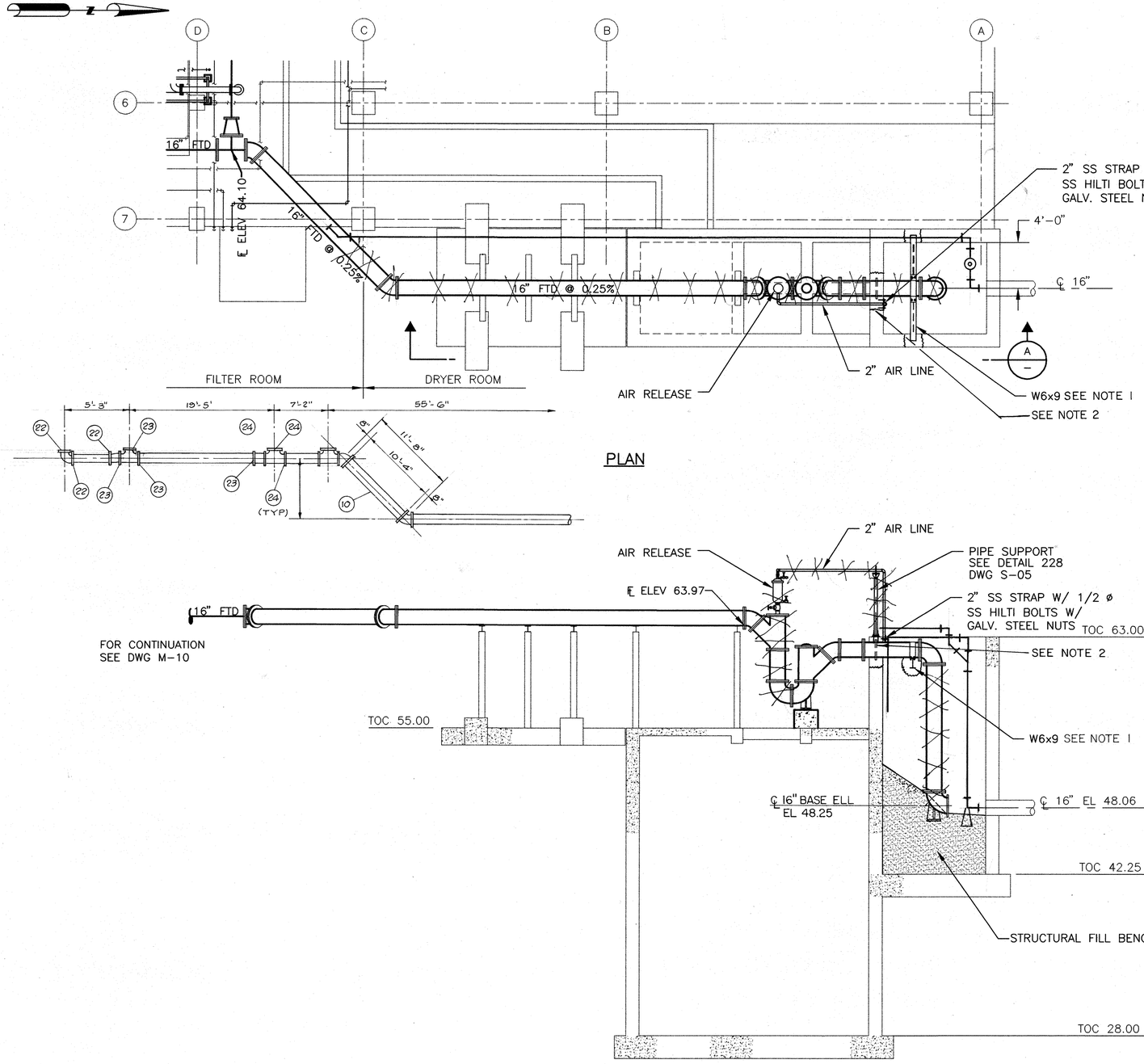

PLAN

SECTION A–

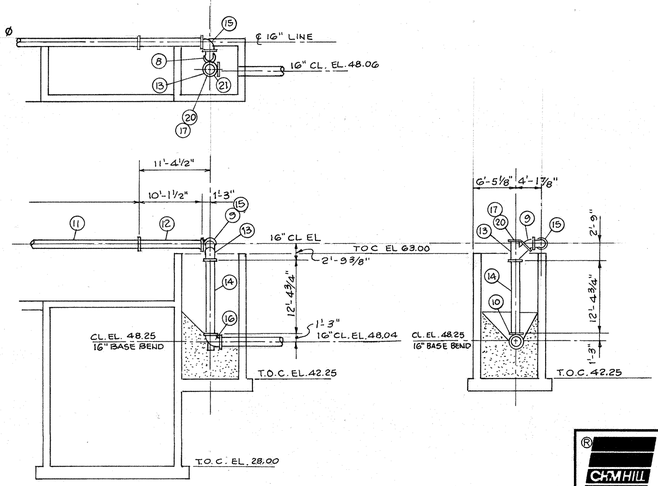

NO	QTY	UNIT	DESCRIPTION
1	1	EA	12" VIC 90 BEND CI
2	1	PC	12"X 5'-2" CI GEXGE
3	1	EA	14"X 12" VIC CONCENTRIC REDUCER CI
4	1	EA	14" VIC TEE CI
5	1	PC	14"X15'-6" CI
6	1	EA	16"X14" VIC CONCENTRIC REDUCER CI
7	2	EA	16" VIC TEE CI
8	1	PC	16"X 4'-6" CI GEXGE
9	3	EA	16" VIC 45 BEND CI
10	1	PC	16"X 10'-4" LX GEXGE
11	1	PC	14"X13'-6" CI GEXGE
12	1	PC	16"X 10'-1½" CI GEXGE
13	1	EA	16" VIC WYE CI
14	1	PC	14"X 12'-4¾" CI GEXGE
15	1	EA	16" VIC 90 BEND CI
16	1	EA	18" VIC 90 RASE BEND CI
17	1	EA	18" BLIND FLG (W/2" TAP FOR AIR RELEASE)
18	–	–	NOT USED
19	–	–	NOT USED
20	1	EA	18" VIC 341 FLG CI
21	1	EA	AIR RELEASE
22	3	EA	12" VIC 31 COUPLING SS BOLTS
23	4	EA	14" VIC 31 COUPLING SS BOLTS
24	16	EA	16" VIC 31 COUPLING SS BOLTS

SEAL
STATE OF TEXAS
H. J. KJELLBERG
38055
REGISTERED PROFESSIONAL ENGINEER
7/1/97

CADD DWG FILE NO: 64300/M19.DWG

COHSTD.BDR

0 1 2 3 ORIGINAL SCALE IN INCHES FOR REDUCED PLANS

REV NO	DESCRIPTION	APP'D	DATE

CH2M HILL
7600 West Tidwell Road, Suite 400
Houston Tx 77040
713.462.0161

Binkley & Barfield, Inc.
Consulting Engineers
1710 Seamist Drive Houston, Texas 77008

ALMEDA SIMS
SLUDGE PROCESSING FACILITY IMPROVEMENTS

GFS NO R-0298-04-3
FILE NO: 4289-2

FILTRATE SEAL PIT PLAN, SECTION AND DETAILS

CITY OF HOUSTON
DEPARTMENT OF PUBLIC WORKS AND ENGINEERING
ENGINEERING, CONSTRUCTION AND REAL ESTATE GROUP

SECTION APPROVALS

WATER ENGINEERING

TRAFFIC AND SIGNAL ENGINEERING

WASTEWATER ENGINEERING 7/1/97

STREET & BRIDGE ENGINEERING

STORM SEWER ENGINEERING

CONSTRUCTION 7/3/97

OTHER DEPARTMENTS

PLANNING AND DEVELOPMENT

SPONSOR DEPARTMENT

CITY ENGINEER 7/7/97 DATE

DIRECTOR OF PUBLIC WORKS AND ENGINEERING 7-8-97 DATE

SUBMITTED:
SCALE: 3/16" = 1'-0"
DATE: JUNE 1997
SURVEY BY:
F B NO:

DESIGNED BY: HJK
DRAWN BY: RPD
DWG NO: M-19
SHEET NO 34 OF 56 SHEETS

CITY DWG NO: 33007

FILE DATE--OPERATOR: 07/02/97-AAA

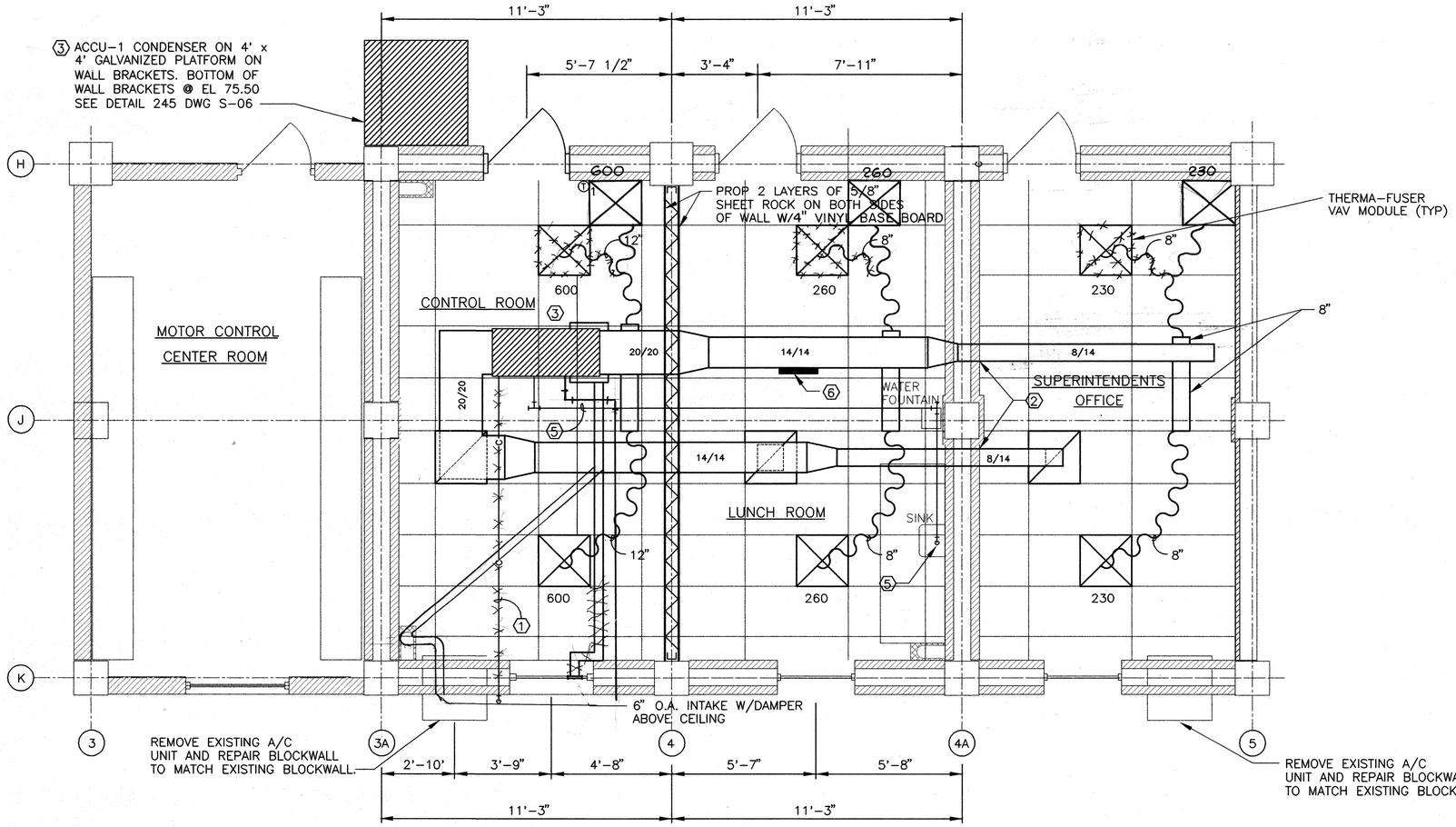

PLAN VIEW

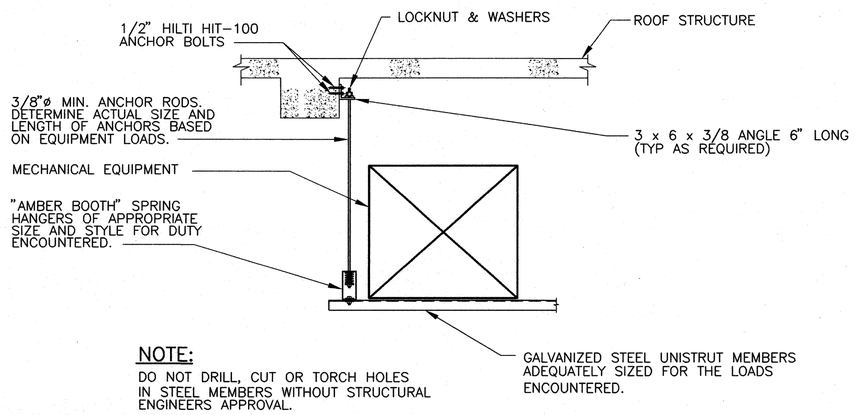

NOTE:
DO NOT DRILL, CUT OR TORCH HOLES IN STEEL MEMBERS WITHOUT STRUCTURAL ENGINEERS APPROVAL.

VIBRATING EQUIPMENT MOUNTING DETAIL
SCALE: NONE

KEY NOTES:

1. ROUTE 3/4" TYPE L COPPER CONDENSATE LINE FROM FCU-1 TO 12" ABOVE FINISHED GRADE. INSTALL TRAP W/90° ELL DOWN AT DRAIN TERMINATION.
2. CONTRACTOR SHALL PENETRATE DUCTWORK THRU CONCRETE WALL FOR BOTH SUPPLY AND RETURN DUCT.
3. FCU-1/ ACCU-1 CARRIER MODEL #38AK007/40RM007 57 MBH TOTAL, 49 MBH SENSIBLE 2,240 CFM @ 0.5" S.P., @ 76.1/63.6 DEGREE FAHRENHEIT, 1.3 BHP FAN, 460/3/60 WITH 8 KW ELECTRIC STRIP HEATER.
4. 140 CFM O.A. (7 PEOPLE @ 20 CFM/PERSON)
5. ROUTE 3/4" TYPE L COPPER SECONDARY CONDENSATE DRAIN ABOVE CEILING TO LOCATION ABOVE SINK; PENETRATE CEILING THRU CHROME ESCUTCHEON AND STUB OUT 1/2".
6. STATIC PRESSURE CONTROL RELIEF DAMPER SET @ 0.3"

SEAL:
STATE OF TEXAS
PAUL W. EHRHARDT
53873
REGISTERED
PROFESSIONAL ENGINEER
7/2/97

CADD DWG FILE NO: 64300/M20.DWG

COHSTD.BDR

0 1 2 3
ORIGINAL SCALE IN INCHES FOR REDUCED PLANS

REV NO	DESCRIPTION	APP'D	DATE

CH2M HILL
7600 West Tidwell Road, Suite 400
Houston Tx 77040
713.462.0161

Binkley & Barfield, Inc.
Consulting Engineers
1710 Seamist Drive Houston, Texas 77008

ALMEDA SIMS
SLUDGE PROCESSING FACILITY IMPROVEMENTS

GFS NO R-0298-04-3
FILE NO: 4289-2

LUNCH ROOM MODIFICATIONS
PLAN AND SECTIONS

CITY OF HOUSTON
DEPARTMENT OF PUBLIC WORKS AND ENGINEERING
ENGINEERING, CONSTRUCTION AND REAL ESTATE GROUP

SECTION APPROVALS

WATER ENGINEERING
TRAFFIC AND SIGNAL ENGINEERING
7/3/97
WASTEWATER ENGINEERING
STREET & BRIDGE ENGINEERING
STORM SEWER ENGINEERING
CONSTRUCTION 7/3/97

OTHER DEPARTMENTS

PLANNING AND DEVELOPMENT
SPONSOR DEPARTMENT

CITY ENGINEER 7/7/97 DATE
DIRECTOR OF PUBLIC WORKS AND ENGINEERING 7-8-97 DATE

SUBMITTED:
SCALE: 3/8" = 1'-0"
DATE: JUNE 1997
SURVEY BY:
F B NO:

DESIGNED BY: PWE
DRAWN BY: FG
DWG NO: M-20
SHEET NO 35 OF 56 SHEETS
CITY DWG NO: 33007

FILE DATE--OPERATOR: 04/22/97--DVB

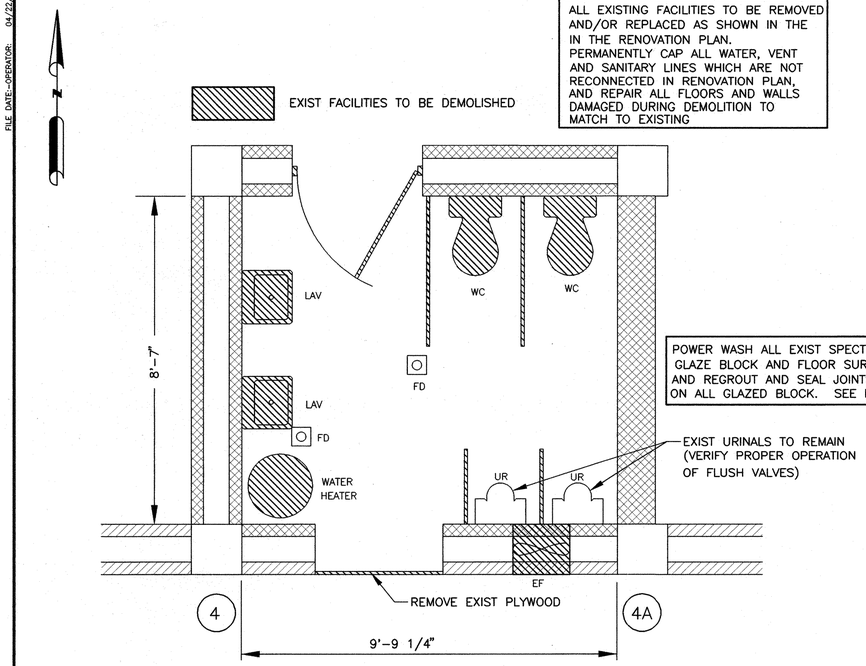

DEMOLITION PLAN

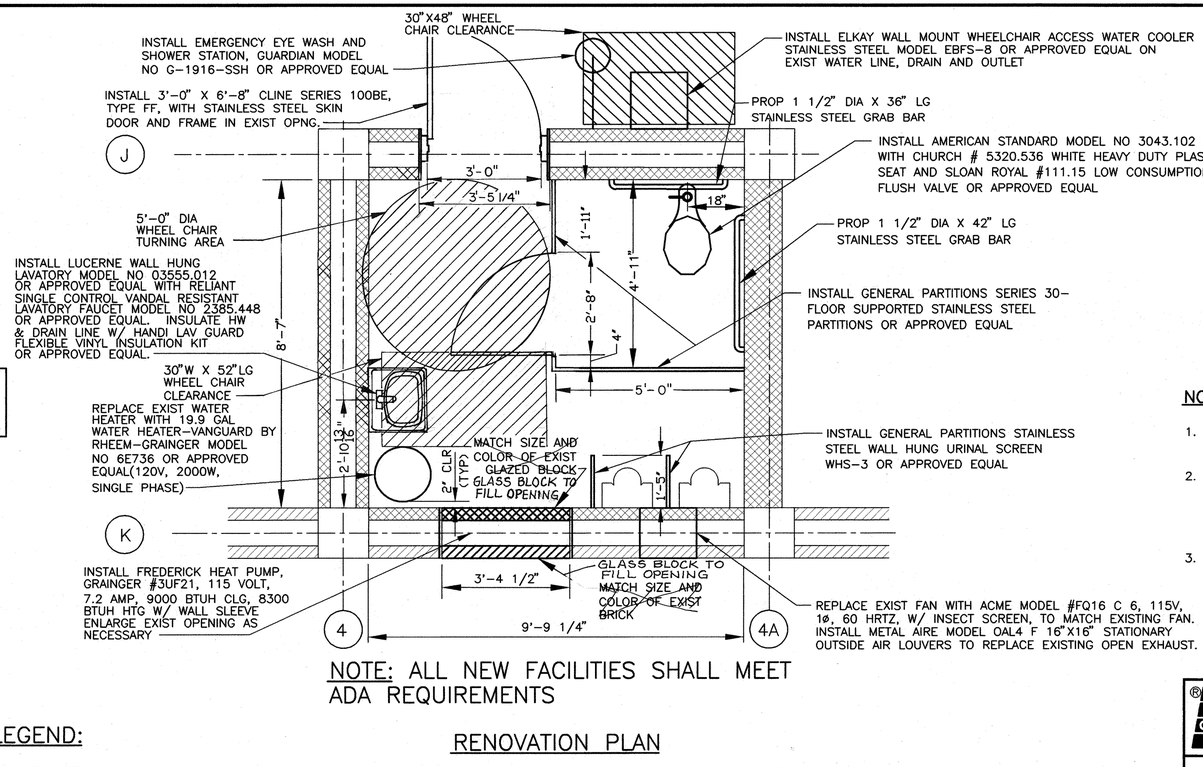

RENOVATION PLAN

NOTE: ALL NEW FACILITIES SHALL MEET ADA REQUIREMENTS

NOTES:

1. CONTRACTOR SHALL FIELD VERIFY ALL DIMENSIONS PRIOR TO SUBMITTAL OF PROPOSED COMPONENTS.
2. INSTALL SKID RESISTANT FLOOR COVERING PER SPECIFICATION SECTION 09740. COVERING SHALL BE OVER ENTIRE FLOOR AND 4" UP EACH WALL ALL AROUND. COLOR SHALL BE SELECTED FROM SAMPLES DURING SUBMITTAL PHASE.
3. CONTRACTOR SHALL REPLACE EXIST CEILING GRID, PANELS, AND LIGHTING WITH SIMILAR OR THE SAME OR APPROVED EQUAL.

LEGEND:

HW(HOT WATER)
CW(COLD WATER)
GAS
VENT
SS(SANITARY SEWER)

WC WATER CLOSET
LAV LAVATORY
FD FLOOR DRAIN
UR URINAL
EF EXHAUST FAN

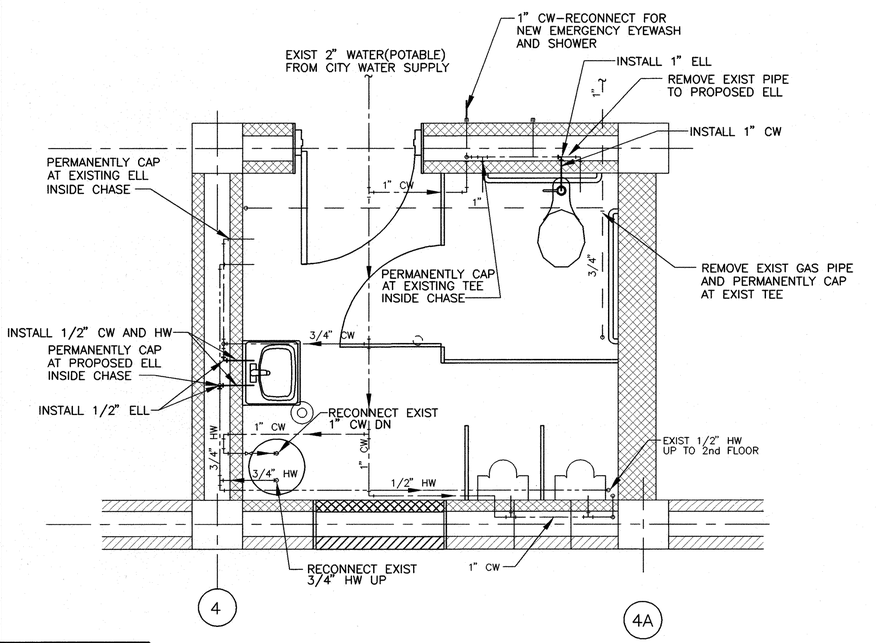

WATER PLAN

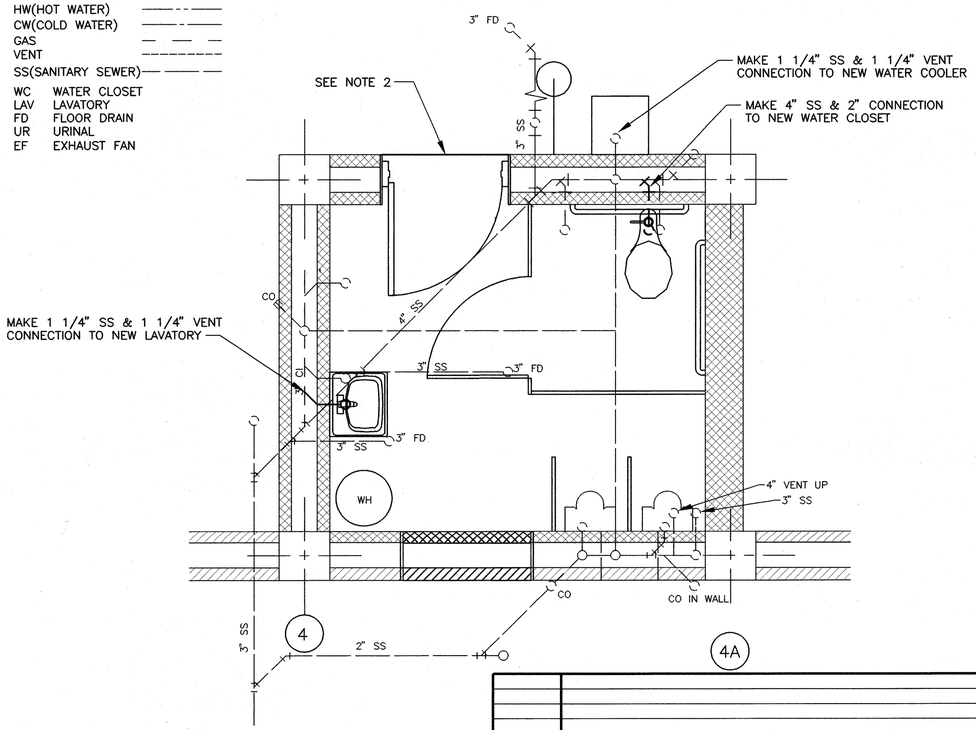

WASTE & VENT PLAN

REV NO	DESCRIPTION	APP'D	DATE

SEAL:

STATE OF TEXAS
ROGER C. BROWN
52635
REGISTERED PROFESSIONAL ENGINEER

CADD DWG FILE NO: 64300/M21.DWG

COHSTD.BDR

0 1 2 3 ORIGINAL SCALE IN INCHES FOR REDUCED PLANS

CH2M HILL
7600 West Tidwell Road, Suite 400
Houston Tx 77040
713.462.0161

Binkley & Barfield, Inc.
Consulting Engineers
1710 Seamist Drive Houston, Texas 77008

ALMEDA SIMS
SLUDGE PROCESSING FACILITY IMPROVEMENTS

GFS NO R-0298-04-3
FILE NO: 4289-2

REST ROOM MODIFICATIONS
PLANS, SECTIONS, AND DETAILS

CITY OF HOUSTON
DEPARTMENT OF PUBLIC WORKS AND ENGINEERING
ENGINEERING, CONSTRUCTION AND REAL ESTATE GROUP

SECTION APPROVALS

WATER ENGINEERING
TRAFFIC AND SIGNAL ENGINEERING
7/1/97
WASTEWATER ENGINEERING
STREET & BRIDGE ENGINEERING
Russell E. Mais 7/3/97
STORM SEWER ENGINEERING
CONSTRUCTION

OTHER DEPARTMENTS

PLANNING AND DEVELOPMENT
SPONSOR DEPARTMENT

CITY ENGINEER — DATE 7/7/97

DIRECTOR OF PUBLIC WORKS AND ENGINEERING — DATE 7-8-97

SUBMITTED:
SCALE: 1/2"=1'-0"
DATE: JUNE 1997
SURVEY BY:
F B NO:

DESIGNED BY: HJK
DRAWN BY: DVB
DWG NO: M-21
SHEET NO 36 OF 56 SHEETS
CITY DWG NO: 33007

FILE DATE--OPERATOR: 04/22/97--DVB

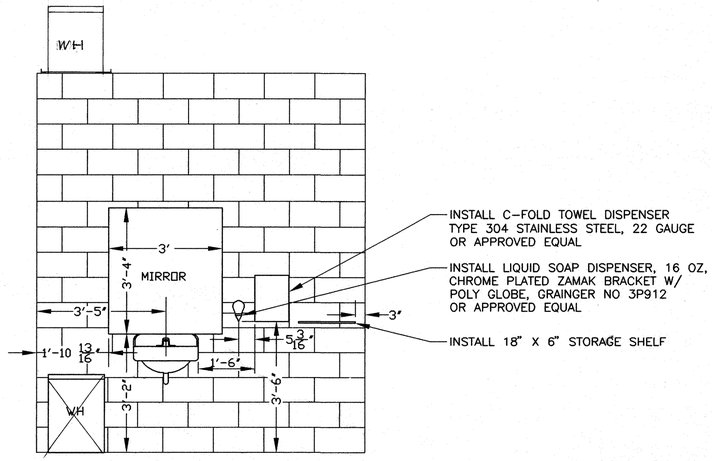

EAST WALL ELEVATION

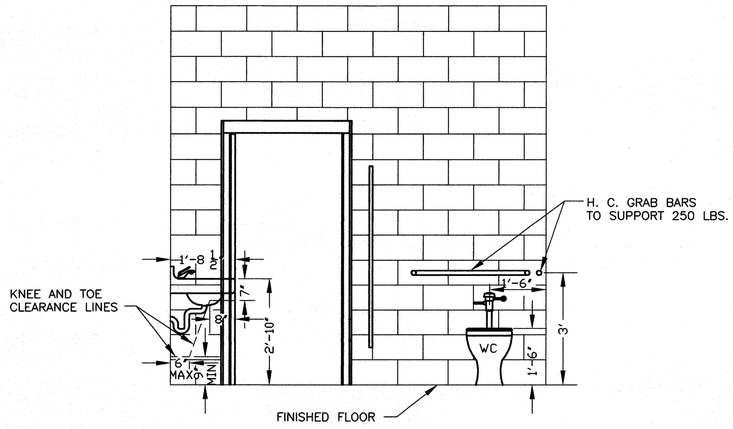

NORTH WALL ELEVATION

SEAL:

STATE OF TEXAS
H. J. KJELLBERG
38055
REGISTERED PROFESSIONAL ENGINEER

7-8-97

CADD DWG FILE NO: 64300/M22.DWG

COHSTD.BDR

0 1 2 3

ORIGINAL SCALE IN INCHES FOR REDUCED PLANS

REV NO	DESCRIPTION	APP'D	DATE

CH2M HILL
7600 West Tidwell Road, Suite 400
Houston Tx 77040
713.462.0161

Binkley & Barfield, Inc.
Consulting Engineers
1710 Seamist Drive Houston, Texas 77008

ALMEDA SIMS
SLUDGE PROCESSING FACILITY IMPROVEMENTS

GFS NO R-0298-04-3
FILE NO: 4289-2

REST ROOM MODIFICATIONS DETAILS

CITY OF HOUSTON
DEPARTMENT OF PUBLIC WORKS AND ENGINEERING
ENGINEERING, CONSTRUCTION AND REAL ESTATE GROUP

SECTION APPROVALS

WATER ENGINEERING — 7/1/97

TRAFFIC AND SIGNAL ENGINEERING

WASTEWATER ENGINEERING

STREET & BRIDGE ENGINEERING — 7/8/97

STORM SEWER ENGINEERING

CONSTRUCTION

OTHER DEPARTMENTS

PLANNING AND DEVELOPMENT

SPONSOR DEPARTMENT

CITY ENGINEER — 7/7/97 DATE

DIRECTOR OF PUBLIC WORKS AND ENGINEERING — 7-8-97 DATE

SUBMITTED:
SCALE: 1/2"=1'-0"
DATE: JUNE 1997
SURVEY BY:
F B NO:

DESIGNED BY: PWE
DRAWN BY: DVB
DWG NO: M-22
SHEET NO 37 OF 56 SHEETS

CITY DWG NO:
33007

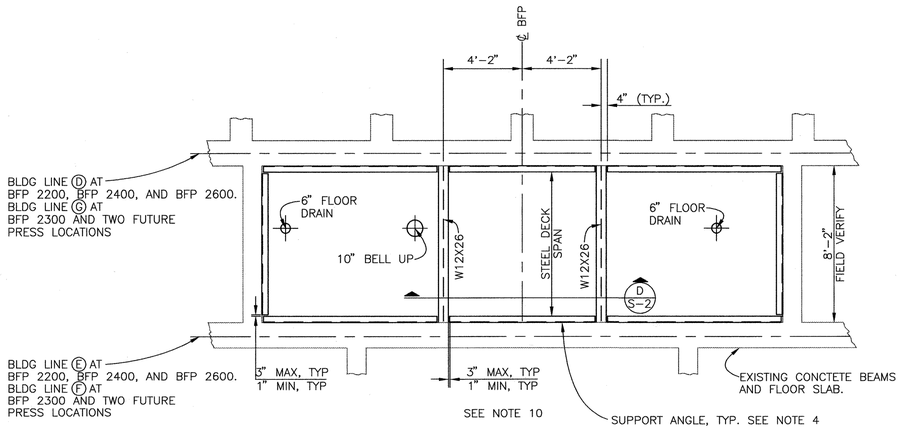

STRUCTURAL SUPPORT PLAN @ ELEV. 70.50
SCALE: 1/4" = 1'-0"

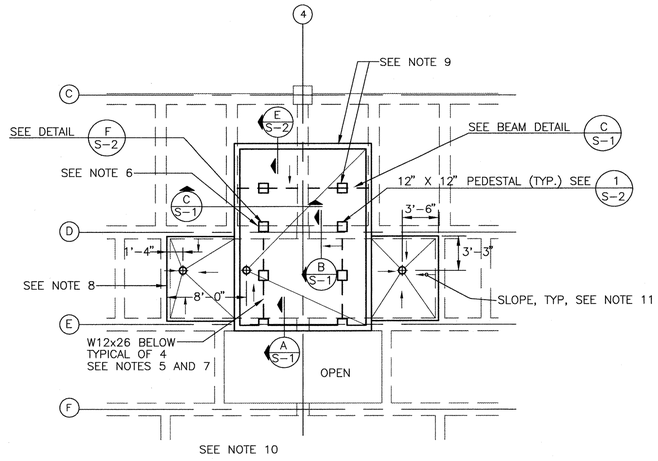

PARTIAL PLAN AT BFP 2200 ELEV 70.50
SCALE: 1/8" = 1'-0"

NOTES:

1. GROUT SHALL BE 1 1/2" (±) THICK AT DRAIN LOCATION.
2. ALL STRUCTURAL STEEL "W" SECTIONS & ANGLES SHALL BE HOT DIPPED GALVANIZED AFTER FABRICATION.
3. SEE M-08 FOR LOCATION OF EACH BELT FILTER PRESS (BFP).
4. L6x4x3/8, LLV. PROVIDE 13/16" HOLES AT 6" IN VERT LEG. ANCHOR TO CONCRETE WITHIN 10" OF EACH END AND AT MAX 1'-6" SPACING.
5. STEEL BEAM TO BE CENTERED UNDER BFP SUPPORT
6. ADDITIONAL W12x26 STEEL BEAM REQUIRED UNDER CONCRETE PEDESTAL IF ℄ BFP BASE PLATE IS LOCATED GREATER THAN 6" FROM FACE OF BEAM.
7. CONTRACTOR SHALL DETERMINE BEAM LOCATION AND FIELD MEASURE LENGTH. CONTRACTOR SHALL COORDINATE WITH EQUIPMENT SUPPLIER SO THAT ℄ BEAM IS AT ℄ BFP BASE PLATE. FIELD VERIFY DISTANCE BETWEEN EXISTING CONCRETE BEAMS AT LOCATION OF EACH W12x26.
8. HOLD TOP OF NEW SLAB 1" BELOW TOP OF EXISTING BEAM WHERE SLAB IS COVERED WITH GROUT. MAKE TOP OF NEW SLAB MATCH TOP OF BEAM ELSEWHERE.
9. NO CURB NO PEDESTALS, AND NO FLOOR GROUT AT LOCATIONS OF FUTURE BFPs.
10. PROVIDE STEEL BEAMS, METAL DECK, AND CONCRETE OVER OPENINGS AT LOCATIONS OF BFP 2200, 2300, 2400, 2600, AND TWO FUTURE BFP LOCATIONS, AS SHOWN AND NOTED. SEE NOTES 8 AND 9. SEE STRUCTURAL SUPPORT PLAN @ ELEV. 70.50. PROVIDE PEDESTALS, CURBS, AND FLOOR GROUT AT LOCATIONS OF BFP 2200, 2300, 2400 AND 2600, AS SHOWN IN PARTIAL PLAN AT BFP 2200 ELEV. 70.50.
11. SLOPE 1/8" PER FOOT OUTSIDE OF CURBS, SLOPE 1/4" PER FOOT INSIDE OF CURBS.

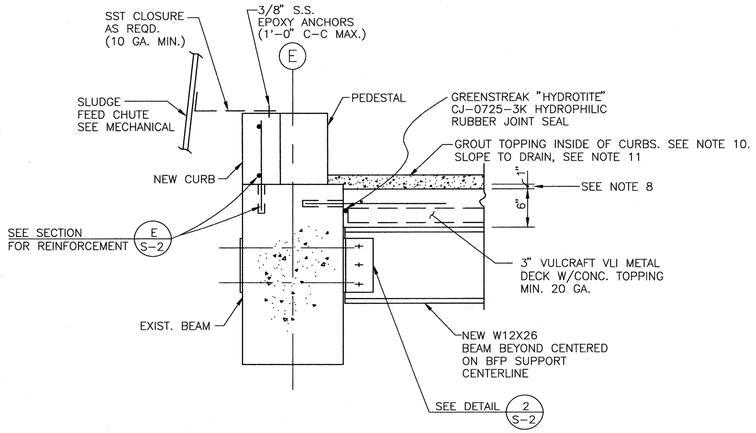

SECTION A
SCALE: 1" = 1'-0" S-1

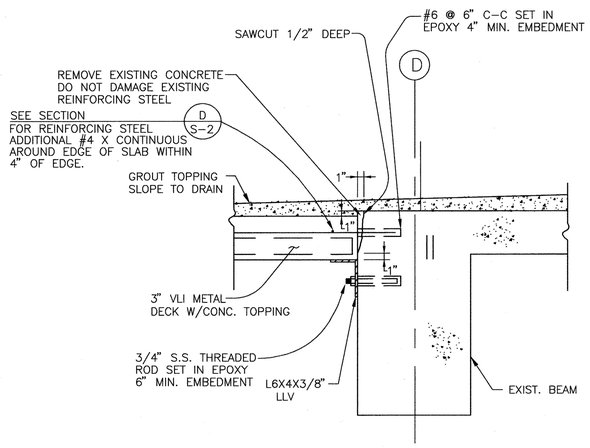

SECTION B
SCALE: 1" = 1'-0" S-1

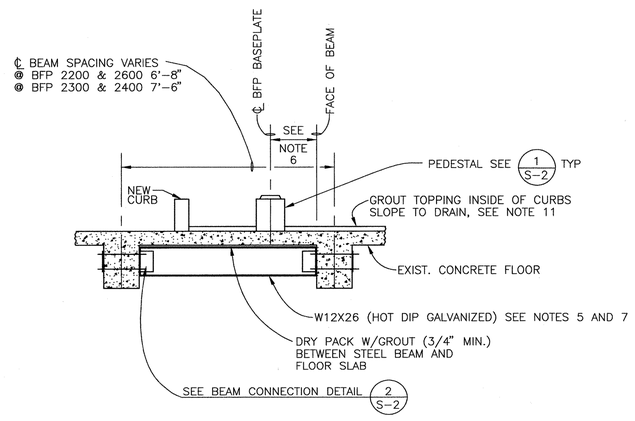

FLOOR SUPPORT BEAM SECTION C
SCALE: 3/8" = 1'-0" S-1

SEAL:
STATE OF TEXAS
MARK E. MANNINGA
58023
REGISTERED
PROFESSIONAL ENGINEER
6/23/97

CADD DWG FILE NO: S-1.DWG

COHSTD.BDR

0 1 2 3 ORIGINAL SCALE IN INCHES FOR REDUCED PLANS

REV NO	DESCRIPTION	APP'D	DATE

CH2M HILL
7600 West Tidwell Road, Suite 400
Houston, Texas 77040-5719
713.462.0161

Binkley & Barfield, Inc.
Consulting Engineers
1710 Seamist Drive Houston, Texas 77008

ALMEDA SIMS
SLUDGE PROCESSING
FACILITY IMPROVEMENTS

PROJECT NO: GFS NO. R-0298-04-3
FILE NO: 4289-2

TITLE: STRUCTURAL
FLOOR SLAB MODIFICATIONS
AT BELT FILTER PRESS

CITY OF HOUSTON
DEPARTMENT OF PUBLIC WORKS AND ENGINEERING
ENGINEERING, CONSTRUCTION AND REAL ESTATE GROUP

SECTION APPROVALS

WATER ENGINEERING	TRAFFIC AND SIGNAL ENGINEERING
7/1/97	
WASTEWATER ENGINEERING	STREET & BRIDGE ENGINEERING
	7/3/97
STORM SEWER ENGINEERING	CONSTRUCTION

OTHER DEPARTMENTS

PLANNING AND DEVELOPMENT	SPONSOR DEPARTMENT

CITY ENGINEER — DATE 7/7/97

DIRECTOR OF PUBLIC WORKS AND ENGINEERING — DATE 7-8-97

SUBMITTED:
SCALE: AS NOTED
DATE: JUNE 1997
SURVEY BY:
F B NO:

DESIGNED BY: MATTHEWS
DRAWN BY: HILL
DWG NO: S-01
SHEET 38 OF 56

CITY DWG NO: 33007

NOTES:

1. ALL CARBON STEEL MEMBERS ARE TO BE HOT DIPPED GALVAINZED AFTER FABRICATION.

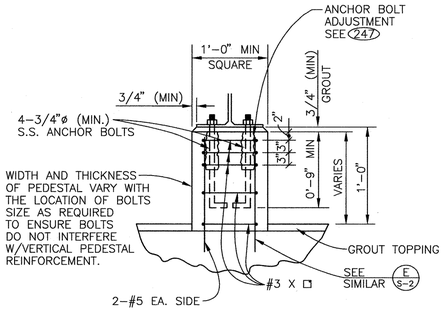

DETAIL 1 S-1
SCALE: NONE

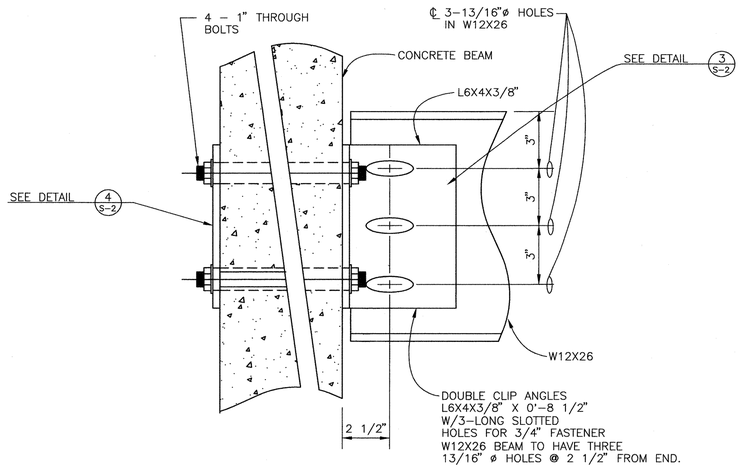

DETAIL 2 S-1
SCALE: 3" = 1'-0"

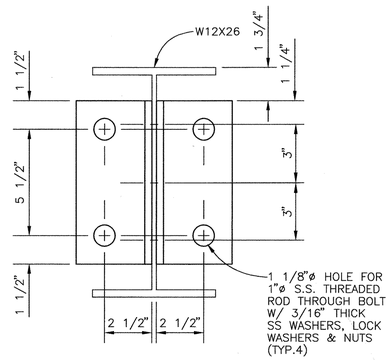

DETAIL 3 S-2
SCALE: 3" = 1'-0"

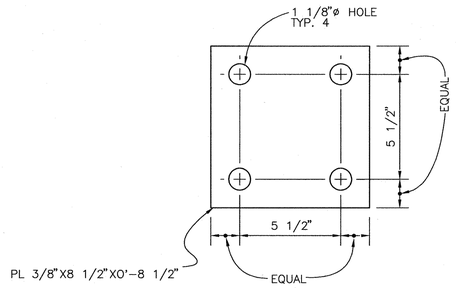

DETAIL 4 S-2
SCALE: 3" = 1'-0"

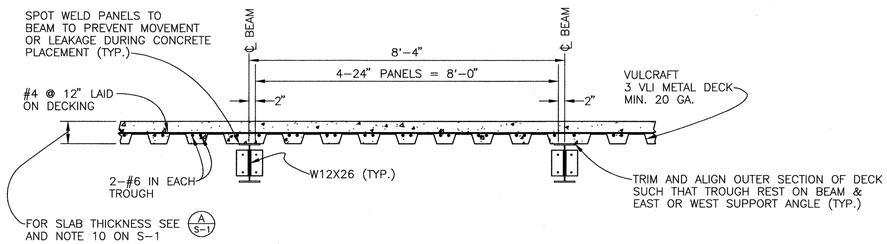

SECTION D S-1
SCALE: 1/2" = 1'-0"

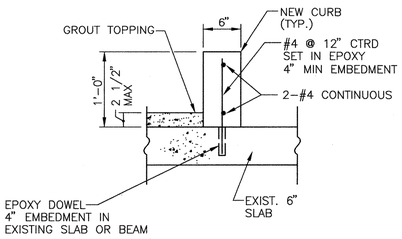

SECTION E —
SCALE: 1" = 1'-0"

CH2M HILL
7600 West Tidwell Road, Suite 400
Houston, Texas 77040-5719
713.462.0161

Binkley & Barfield, Inc.
Consulting Engineers
1710 Seamist Drive Houston, Texas 77008

ALMEDA SIMS
SLUDGE PROCESSING
FACILITY IMPROVEMENTS

PROJECT NO: GFS NO. R-0298-04-3
FILE NO: 4289-2

TITLE: STRUCTURAL SECTIONS & DETAILS

CITY OF HOUSTON
DEPARTMENT OF PUBLIC WORKS AND ENGINEERING
ENGINEERING, CONSTRUCTION AND REAL ESTATE GROUP

SECTION APPROVALS

WATER ENGINEERING	TRAFFIC AND SIGNAL ENGINEERING
WASTEWATER ENGINEERING	STREET & BRIDGE ENGINEERING
STORM SEWER ENGINEERING	CONSTRUCTION

OTHER DEPARTMENTS

PLANNING AND DEVELOPMENT	SPONSOR DEPARTMENT

CITY ENGINEER — DATE 7/7/97

DIRECTOR OF PUBLIC WORKS AND ENGINEERING — DATE 7-8-97

SEAL: MARK C. NANNINGA, 50823, REGISTERED PROFESSIONAL ENGINEER, STATE OF TEXAS — 6/23/97

CADD DWG FILE NO: S-2.DWG

COHSTD.BDR

0 1 2 3 ORIGINAL SCALE IN INCHES FOR REDUCED PLANS

REV NO	DESCRIPTION	APP'D	DATE

SUBMITTED:
SCALE: AS NOTED
DATE: JUNE 1997
SURVEY BY:
F B NO:

DESIGNED BY: MATTHEWS
DRAWN BY: HILL
DWG NO: S-02
SHEET 39 OF 56
CITY DWG NO: 33007

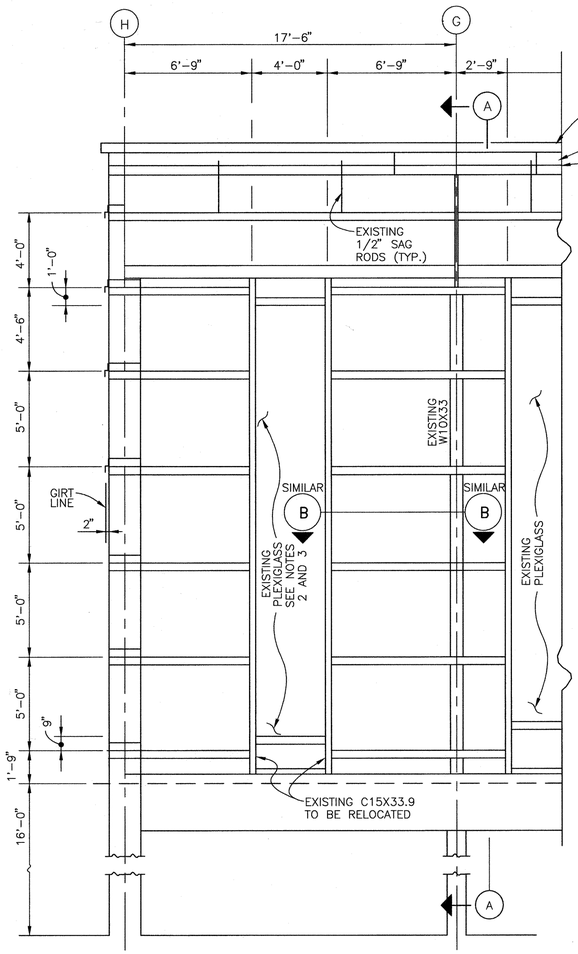

EXISTING EAST ELEVATION
SCALE: 1/4" = 1'-0"

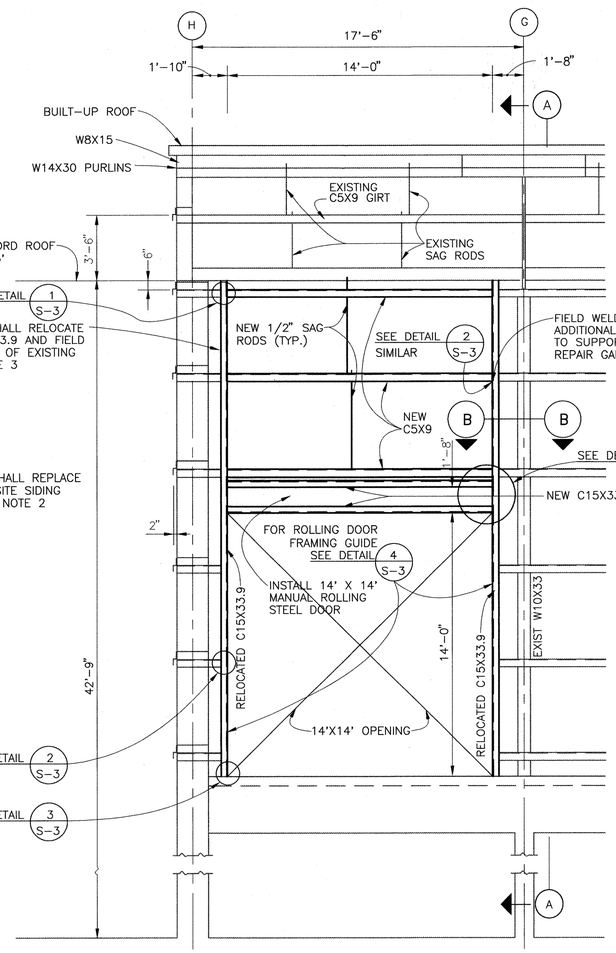

PROPOSED EAST ELEVATION
SCALE: 1/4" = 1'-0"

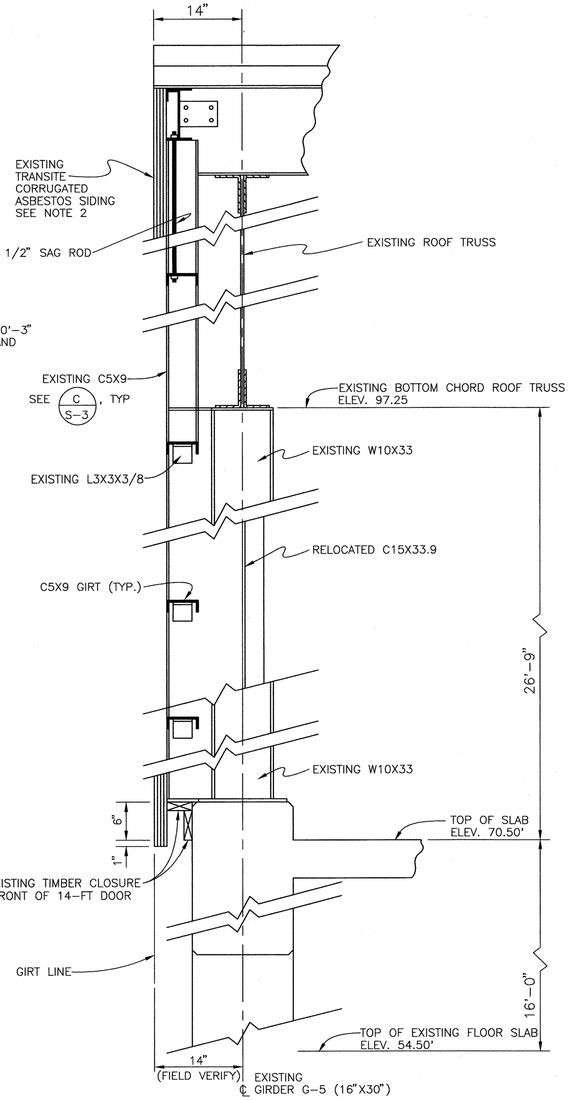

SECTION A
SCALE: 1" = 1'-0" S-3

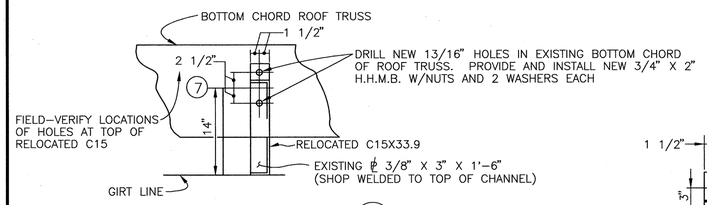

DETAIL 1
SCALE: 1" = 1'-0" S-3

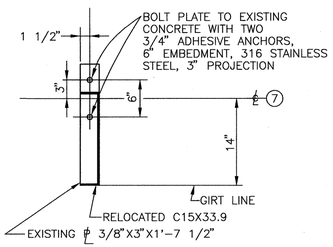

DETAIL 3
SCALE: 1" = 1'-0" S-3

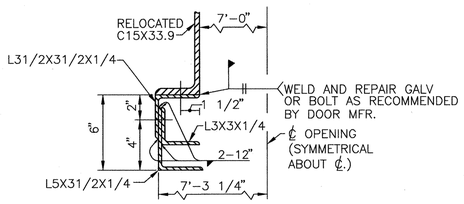

DETAIL 4
SCALE: 2" = 1'-0" S-3

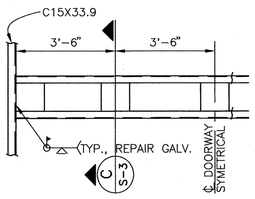

DETAIL 5
SCALE: 3/8" = 1'-0" S-3

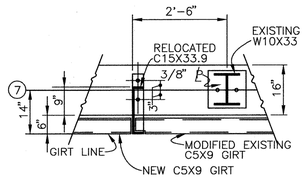

SECTION B
SCALE: 1/2" = 1'-0" S-3

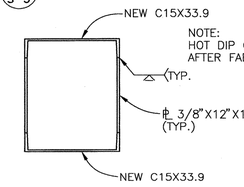

SECTION C
SCALE: 1" = 1'-0" S-3

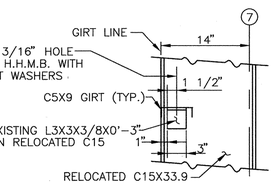

DETAIL 2
SCALE: 1" = 1'-0" S-3

NOTES:

1. DETAILS 1, 2 AND 3 AND SECTIONS A AND B ARE BASED ON THE ORIGINAL ALMEDA SIMS DISPOSAL PLANT 1973 CONSTRUCTION DRAWINGS (CITY OF HOUSTON DRAWING NO. 10845), SHEETS 48 AND 49. CONTRACTOR FIELD VERIFY EXISTING CONSTRUCTION IS AS SHOWN IN THESE DETAILS.
2. CONTRACTOR SHALL REMOVE EXISTING TRANSITE CORRUGATED ASBESTOS SIDING FROM COLUMN ROW "H" TO AT LEAST 2'-9" NORTH OF COLUMN ROW "G". SHEETS SHALL BE REMOVED WITHOUT CUTTING THE PANELS. CONTRACTOR SHALL UTILIZE A SUBCONTRACTOR LICENSED TO PERFORM ASBESTOS ABATEMENT SERVICES. THE SIDING SHALL BE REMOVED AND DISPOSED OF BY THE SUBCONTRACTORS IN FULL CONFORMANCE WITH ALL APPLICABLE STATE AND LOCAL LAWS AND ORDINANCES. CONTRACTOR SHALL REPLACE SIDING WITH CORRUGATED FRP SIDING. THE CONTRACTOR SHALL SUBMIT COLOR SAMPLES TO THE ENGINEER FROM THE MANUFACTURE'S STANDARD SELECTION. THE CONTRACTOR SHALL INSTALL ALL FLASHING; AND TRANSITION PIECES REQUIRED FOR A COMPLETE AND WEATHER PROOF INSTALLATION. FRP SIDING SHALL BE TUFF SPAN 400 FLASHING AND TRANSITION PIECES SHALL BE FRP OR STAINLESS STEEL PAINTED TO MATCH SIDING.
3. CONTRACTOR SHALL REMOVE EXISTING WINDOW AND FRAME BETWEEN COLUMN ROW "G" AND "H" AND DISPOSE. THE TWO C15X33.9 MEMBERS SHALL BE RELOCATED TO PROVIDE 14'-0" FACE-TO-FACE CLEAR SPACING FOR INSTALLATION OF PROPOSED ROLLING DOOR. EXISTING C5X9 GIRTS SHALL BE FIELD TRIMMED TO MATCH NEW LOCATION OF C15X33.9. CONTRACTOR MAY FLAME CUT LENGTH AND BOLT HOLES IN GIRTS WITH TORCH. ALL DAMAGED GALVANIZED SURFACES SHALL BE REPAIRED WITH A COLD APPLIED GALVANIZE REPAIR. HOLES IN LOWER CHORD OF ROOF TRUSS FOR BOLTING OF C15X33.9 SHALL BE DRILLED. LOWER ANCHORS OF C15X33.9 AT CONCRETE BEAM SHALL BE STAINLESS STEEL ALL THREAD SET IN EPOXY IN HOLES (CORING MACHINE SHALL NOT BE USED IN CONCRETE BEAM). CONTRACTOR SHALL PROVIDE NEW HOT DIPPED GALVANIZED C5X9 GIRTS, 1/2" SAG RODS, C15X33.9 HEAD BEAMS, ANGLES FOR ROLLING DOOR EDGE GUIDE, AND ALL OTHER MISCELLANEOUS METAL AND FASTENERS REQUIRED FOR A COMPLETE INSTALLATION.

SEAL:
STATE OF TEXAS
MARK G. NANNINGA
50823
REGISTERED PROFESSIONAL ENGINEER
6/23/97

CADD DWG FILE NO: S-3.DWG

COHSTD.BDR

0 1 2 3
ORIGINAL SCALE IN INCHES FOR REDUCED PLANS

REV NO	DESCRIPTION	APP'D	DATE

CH2M HILL
7600 West Tidwell Road, Suite 400
Houston, Texas 77040-5719
713.462.0161

Binkley & Barfield, Inc.
Consulting Engineers
1710 Seamist Drive Houston, Texas 77008

ALMEDA SIMS
SLUDGE PROCESSING
FACILITY IMPROVEMENTS

PROJECT NO: GFS NO. R-0298-04-3
FILE NO: 4289-2

TITLE: STRUCTURAL
EAST WALL MODIFICATION

CITY OF HOUSTON
DEPARTMENT OF PUBLIC WORKS AND ENGINEERING
ENGINEERING, CONSTRUCTION AND REAL ESTATE GROUP

SECTION APPROVALS

WATER ENGINEERING	TRAFFIC AND SIGNAL ENGINEERING
7/1/97	
WASTEWATER ENGINEERING	STREET & BRIDGE ENGINEERING
	7/3/97
STORM SEWER ENGINEERING	CONSTRUCTION

OTHER DEPARTMENTS

PLANNING AND DEVELOPMENT	SPONSOR DEPARTMENT

CITY ENGINEER — DATE 7/7/97

DIRECTOR OF PUBLIC WORKS AND ENGINEERING — DATE 7-8-97

SUBMITTED:
SCALE: AS NOTED
DATE: JUNE 1997
SURVEY BY:
F B NO:

DESIGNED BY: MATTHEWS
DRAWN BY: HILL
DWG NO: S-03
SHEET 40 OF 56

CITY DWG NO: 33007

FILE DATE--OPERATOR: 05/13/97-AAA

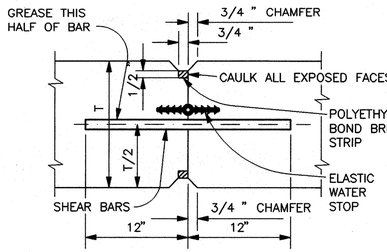

PROVIDE 3/4 " DIA. SHEAR BARS @ 18" CTRS. ACROSS JOINT.

WALLS

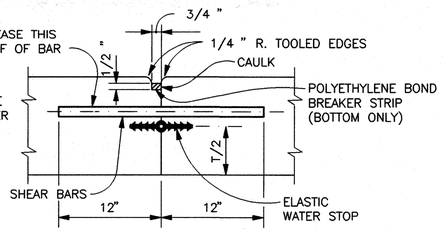

PROVIDE 3/4 " SHEAR BARS @ 18" CTRS. ACROSS JOINT.

SLABS

CONTRACTION JOINTS 210

SCALE: NO SCALE

TYPE A – WITH ELASTIC WATER STOP
TYPE B – WITHOUT ELASTIC WATER STOP

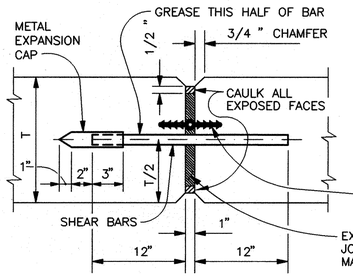

PROVIDE 3/4" DIA. SHEAR BARS @ 18" CTRS. ACROSS JOINT.

WALLS

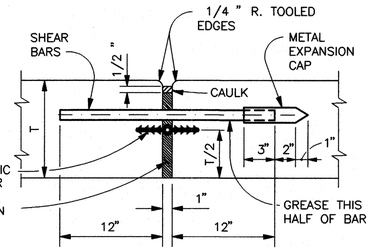

PROVIDE 3/4" DIA. SHEAR BARS @ 18" CTRS. ACROSS JOINT.

SLABS

EXPANSION JOINTS 211

SCALE: NO SCALE

TYPE C – WITH ELASTIC WATER STOP
TYPE D – WITHOUT ELASTIC WATER STOP

NOTES: 1. REINFORCING SHALL NOT BE EXTENDED ACROSS JOINT.
2. SHEAR BARS SHALL BE SMOOTH AND FREE FROM RUST OR SCALE.

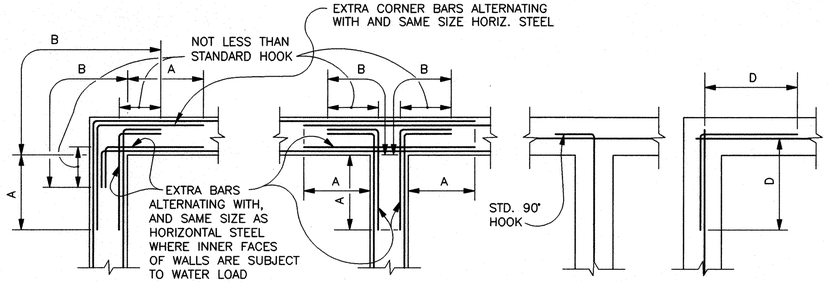

NOTE: VERTICAL REINFORCING NOT SHOWN FOR CLARITY.

A = 1/5 THE CLEAR SPAN DISTANCE MEASURED HORIZONTALLY OR VERTICALLY, WHICHEVER IS THE SMALLER, BUT IN NO CASE LESS THEN THE REQUIRED LENGTH OF LAPPED SPLICES FOR TOP BARS AS SHOWN ON THIS SHEET.

B = SUFFICIENT LENGTH TO PERMIT BARS TO EXTEND THROUGH THE WALL TO THE OPPOSITE FACE AND TERMINATE IN A STANDARD HOOK.

D = NOT LESS THAN THE LENGTH REQUIRED FOR LAPPED SPLICES FOR TOP BARS AS SHOWN ON THIS SHEET.

TYPICAL CORNER REINFORCING DETAILS 213

SCALE: NO SCALE

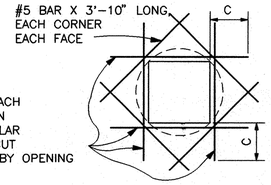

FOR SLAB THICKER THAN 7"

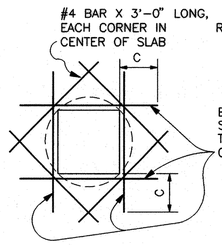

FOR SLAB 7" AND LESS IN THICKNESS

SLABS

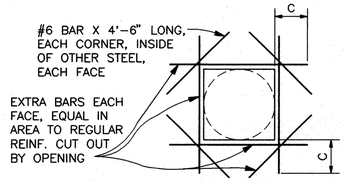

OPENINGS LARGER THAN 21" IN DIAM. OR DIAGONAL

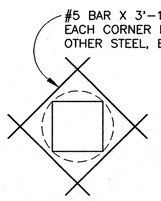

OPENINGS 21" AND LESS IN DIAM. OR DIAGONAL

WALLS

TYPICAL EXTRA REINFORCING AT OPENINGS 214

SCALE: NO SCALE

C = THE REQUIRED LENGTH FOR LAPPED SPLICE FOR TOP BARS AS SHOWN ON THIS SHEET.

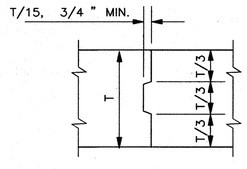

SLABS

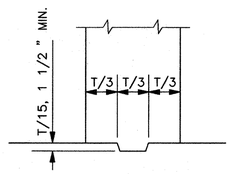

BASE OF WALLS

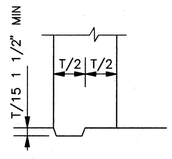

JOINTS WITHOUT WATER STOPS

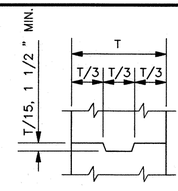

WALLS

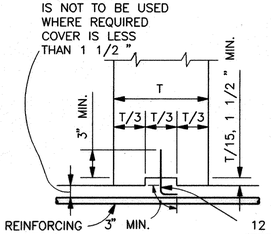

ALTERNATIVE
T ≥ 12"

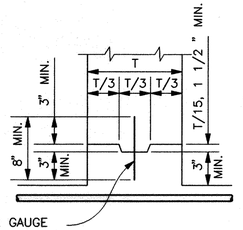

ALTERNATIVE
T ≥ 12"

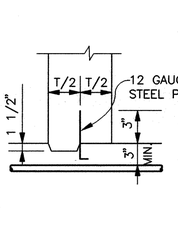

ALTERNATIVE
T ≤ 12"

BASE OF WALLS

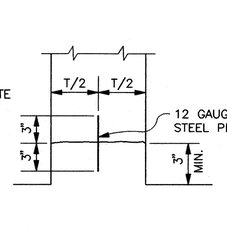

T < 12"

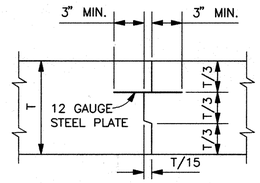

SECTION
T ≥ 12"

SLABS

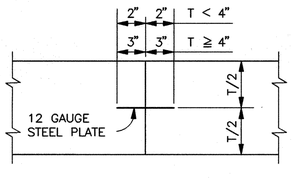

SECTION
T < 12"

WATERTIGHT JOINTS

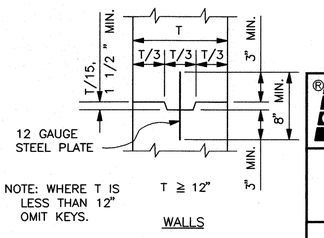

NOTE: WHERE T IS LESS THAN 12" OMIT KEYS.

T ≥ 12"

WALLS

TYPICAL CONSTRUCTION JOINTS 212

SCALE: NO SCALE

NOTE: REINFORCING STEEL IS TO BE CARRIED ACROSS ALL CONSTRUCTION JOINTS.

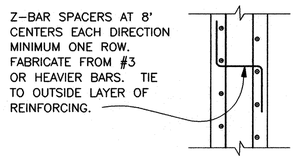

SPACERS FOR WALL REINFORCEMENT 215

SCALE: NO SCALE

BAR SIZE	LENGTH OF LAPPED SPLICES FOR REINFORCING IN INCHES			
	SPLICES NOT STAGGERED		WITH STAGGERED SPLICES	
	*TOP BARS	OTHERS	*TOP BARS	OTHERS
3	20	20	15	15
4	23	20	17	15
5	30	24	24	18
6	42	30	30	24
7	50	36	38	27
8	66	47	50	36
9	83	60	64	46
10	106	76	81	58
11	130	93	100	71

* TOP BARS ARE HORIZONTAL BARS SO PLACED THAT MORE THAN 12" OF CONCRETE IS CAST IN THE MEMBER BELOW THE BAR. HORIZONTAL BARS IN WALLS ARE TO BE PROVIDED WITH LAPS AS REQUIRED FOR TOP BARS.

LENGTHS FOR LAPPED SPLICES SHALL BE NOT LESS THAN (NO MINUS TOLERANCE) SHOWN ABOVE.

LAPPED SPLICES SHALL NOT BE MADE AT POINTS OF MAX. STRESS AS DETERMINED BY THE ENGINEER AND SHALL NOT BE SPACED CLOSER THAN 6" ON CTRS. SPLICES ARE STAGGERED IF NOT MORE THAN 1/2 ARE SPLICED IN A LAP SPLICE LENGTH.

GENERAL NOTES:
WHETHER SPECIFICALLY REFERENCED OR NOT, EXCEPT WHERE SPECIFICALLY SHOWN OTHERWISE, DETAILS ON THIS SHEET APPLY TO THE ENTIRE SET OF DRAWINGS.

CONCRETE COVER FOR REINFORCEMENT

LOCATION	MINIMUM COVER
UNFORMED SURFACES ADJACENT TO EXCAVATION	3"
FORMED, TOP SURFACE OR UNFORMED EXPOSED TO LIQUID OR WATER CONDENSATION	3"
FORMED, OR UNFORMED SURFACE EXPOSED TO OR ABOVE SANITARY SEWAGE	3"
UNFORMED SURFACES OVER SEAL SLAB	2"
FORMED OR TOP SURFACES EXPOSED TO WEATHER OR SATURATED AIR, SUBMERGED OR IN CONTACT WITH EARTH:	
#6 OR LARGER BARS	2"
#5 OR SMALLER BARS	1 1/2 "
OTHER LOCATIONS:	
BARS IN BEAMS OR GIRDERS INCLUDING STIRRUPS	1 1/2 "
COLUMN SPIRALS OR TIES	1 1/2 "
OTHER BARS	
#7 OR LARGER	BAR DIAMETER
#6 OR SMALLER	3/4 "

COVER FOR REINFORCING STEEL SHALL NOT BE LESS THAN THE MINIMUM GIVEN ABOVE (NO MINUS TOLERANCE). AND SHALL NOT EXCEED THE MINIMUM BY MORE THAN 1/4 INCH WHERE THE CONCRETE THICKNESS IS < 24 INCHES OR LESS, OR MORE THAN 1/2 INCH WHERE THE CONCRETE THICKNESS IS MORE THAN ≥ 24 INCHES.

CH2M HILL
7600 West Tidwell Road, Suite 400
Houston Tx 77040
713.462.0161

Binkley & Barfield, Inc.
Consulting Engineers
1710 Seamist Drive Houston, Texas 77008

ALMEDA SIMS
SLUDGE PROCESSING FACILITY IMPROVEMENTS

GFS NO R-0298-04-3
FILE NO: 4289–2

STANDARD REINFORCED CONCRETE DETAILS

CITY OF HOUSTON
DEPARTMENT OF PUBLIC WORKS AND ENGINEERING
ENGINEERING, CONSTRUCTION AND REAL ESTATE GROUP

SECTION APPROVALS

WATER ENGINEERING	TRAFFIC AND SIGNAL ENGINEERING
WASTEWATER ENGINEERING	STREET & BRIDGE ENGINEERING
STORM SEWER ENGINEERING	CONSTRUCTION

OTHER DEPARTMENTS

PLANNING AND DEVELOPMENT	SPONSOR DEPARTMENT

CITY ENGINEER — DATE 7/7/97

DIRECTOR OF PUBLIC WORKS AND ENGINEERING — DATE 7-8-97

SEAL:
STATE OF TEXAS
ROGER C. BROWN
52635
REGISTERED PROFESSIONAL ENGINEER

REV NO	DESCRIPTION	APP'D	DATE

SUBMITTED:
SCALE: NONE
DATE: JUNE 1997
SURVEY BY:
F B NO:

DESIGNED BY: RCB
DRAWN BY: AAA
DWG NO: S-04
SHEET NO 41 OF 56 SHEETS
CITY DWG NO: 33007

CADD DWG FILE NO: 64300/S04.DWG

COHSTD.BDR

0 1 2 3 ORIGINAL SCALE IN INCHES FOR REDUCED PLANS

FILE DATE--OPERATOR: 05/13/97--AAA

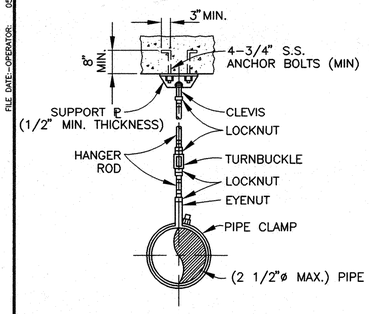

PIPE HANGER DETAILS 220

NOTE:
FOR INSTALLATION IN EXISTING CONCRETE USE 4-3/4" x 5 1/2" HILTI KWIK BOLTS OR EQUAL.

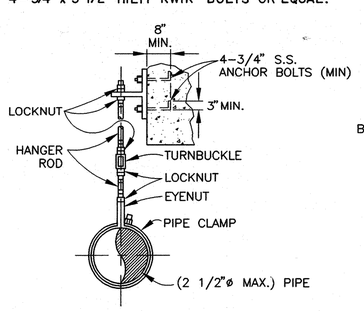

PIPE HANGER DETAILS 221

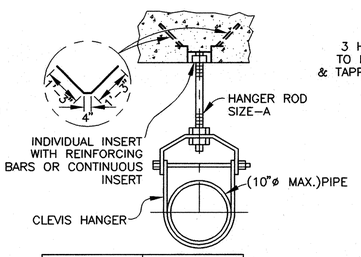

PIPE SIZE	A HANGER ROD
2" & SMALLER	3/8"
2 1/2"	1/2"
3" THRU 4"	5/8"
6" THRU 10"	3/4"
12"	7/8"

PIPE HANGER DETAILS 222

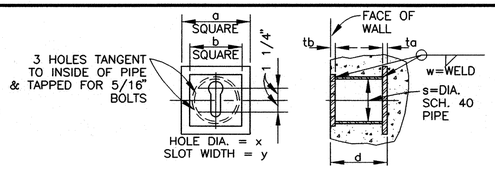

BOLT SIZE	DIMENSIONS IN INCHES									
	a	ta	b	tb	d	s	w	x	y	
3/4	7	1/2	5 1/2	3/8	5 1/2	4	1/4	1 7/16	7/8	
7/8	9	5/8	7	3/4	7 1/2	5	3/8	1 13/16	1	
1	9	5/8	7	3/4	7 1/2	5	3/8	1 13/16	1	1/8
1 1/8	11	7/8	8	3/4	9	6	3/8	2 1/4	1	1/4
1 1/4	11	7/8	8	3/4	9	6	3/8	2 1/4	1	3/8

PIPE HANGER DETAILS 223

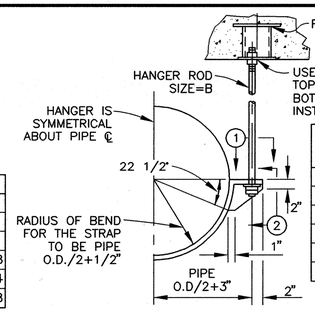

PIPE SIZE	B HANGER ROD	C STRAP SIZE
12"	3/8"	1/2" X 6"
15"-20"	3/4"	5/8" X 6"
24"-30"	3/4"	3/4" X 6"
36"	7/8"	3/4" X 8 1/2"
42"	1"	3/4" X 11"
48"	1 1/8"	7/8" X 11"

PIPE HANGER DETAILS 224

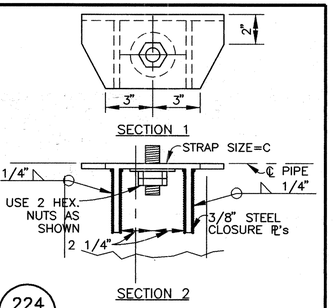

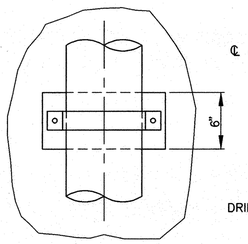

PLAN

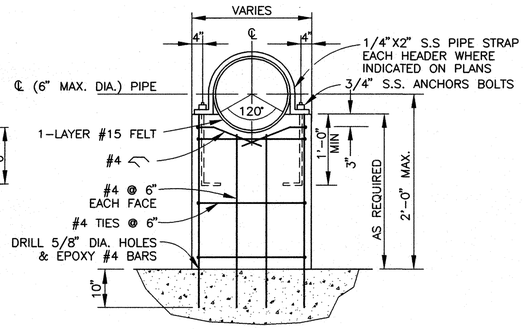

ELEVATION

PIPE SUPPORT DETAIL 225

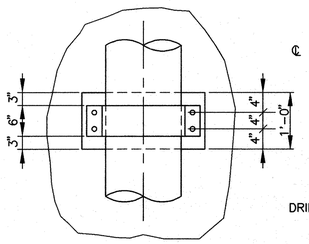

PLAN

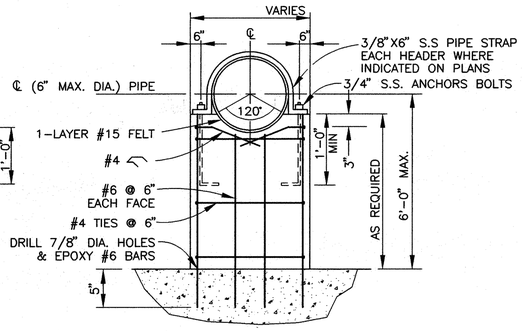

ELEVATION

PIPE SUPPORT DETAIL 226

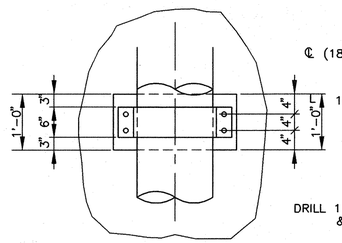

PLAN

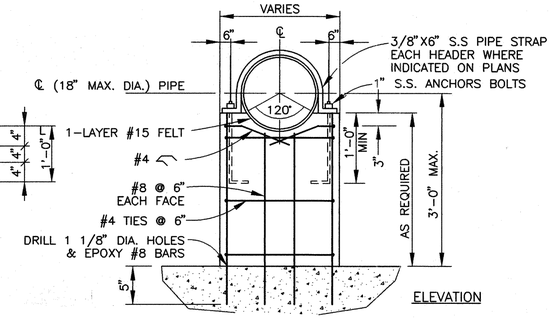

ELEVATION

PIPE SUPPORT DETAIL 227

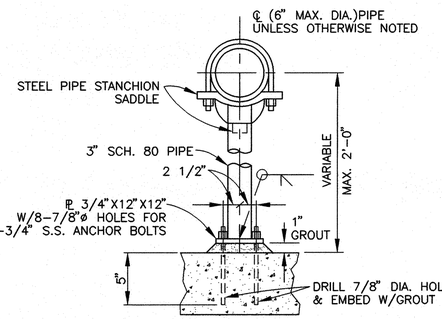

NOTE: HOT DIP GALV. AFTER FABRICATION

TYPICAL PIPE SUPPORT DETAIL 228

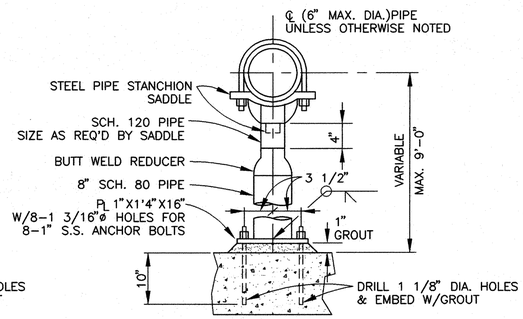

NOTE: HOT DIP GALV. AFTER FABRICATION

TYPICAL PIPE SUPPORT DETAIL 229

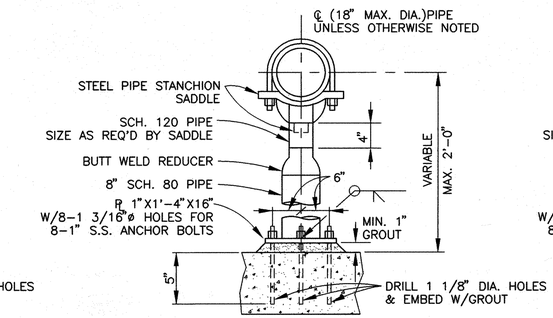

NOTE: HOT DIP GALV. AFTER FABRICATION

TYPICAL PIPE SUPPORT DETAIL 230

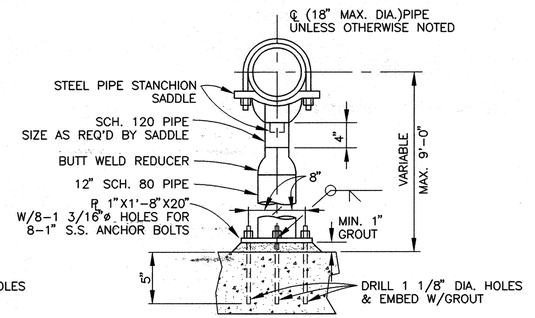

NOTE: HOT DIP GALV. AFTER FABRICATION

TYPICAL PIPE SUPPORT DETAIL 231

NOTES:

1. EXCEPT WHERE SPECIFICALLY SHOWN OTHERWISE, DETAILS ON THIS SHEET APPLY TO THE ENTIRE SET OF DRAWINGS, WHETHER SPECIFICALLY REFERENCED OR NOT.

SEAL:

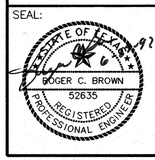

CADD DWG FILE NO: 64300/S05.DWG

COHSTD.BDR

0 1 2 3 ORIGINAL SCALE IN INCHES FOR REDUCED PLANS

REV NO	DESCRIPTION	APP'D	DATE

CH2M HILL
7600 West Tidwell Road, Suite 400
Houston Tx 77040
713.462.0161

Binkley & Barfield, Inc.
Consulting Engineers
1710 Seamist Drive Houston, Texas 77008

ALMEDA SIMS
SLUDGE PROCESSING FACILITY IMPROVEMENTS

GFS NO R-0298-04-3
FILE NO: 4289-2

STANDARD PIPE SUPPORT DETAILS

CITY OF HOUSTON
DEPARTMENT OF PUBLIC WORKS AND ENGINEERING
ENGINEERING, CONSTRUCTION AND REAL ESTATE GROUP

SECTION APPROVALS

WATER ENGINEERING	TRAFFIC AND SIGNAL ENGINEERING
7/1/97	
WASTEWATER ENGINEERING	STREET & BRIDGE ENGINEERING
	7/3/97
STORM SEWER ENGINEERING	CONSTRUCTION

OTHER DEPARTMENTS

PLANNING AND DEVELOPMENT	SPONSOR DEPARTMENT

CITY ENGINEER	7/7/97 DATE
DIRECTOR OF PUBLIC WORKS AND ENGINEERING	7-8-97 DATE

SUBMITTED:
SCALE: NONE
DATE: JUNE 1997
SURVEY BY:
F B NO:

DESIGNED BY: RCB
DRAWN BY: AAA
DWG NO: S-05
SHEET NO 42 OF 56 SHEETS
CITY DWG NO: 33007

FILE DATE--OPERATOR: 05/13/97--AAA PLOT 1=1.25

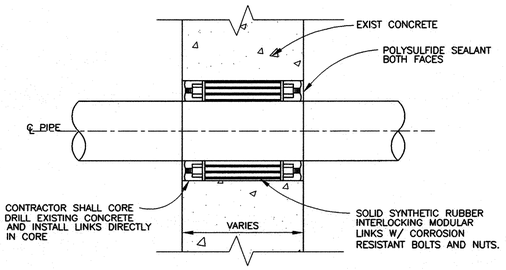

CONCRETE WALL PENETRATION 240
SCALE: NONE

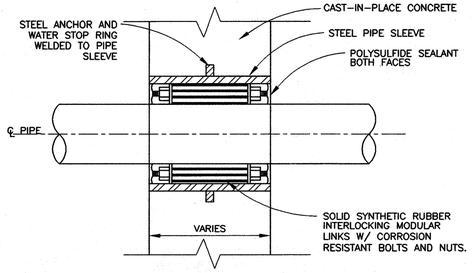

CONCRETE WALL PENETRATION 241
SCALE: NONE

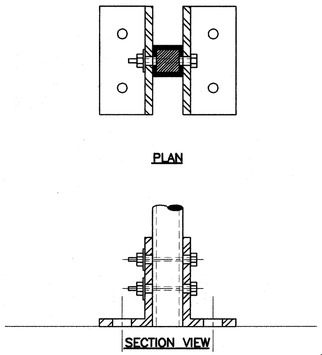

TYP HANDRAIL SUPPORT DETAIL 242 M-09

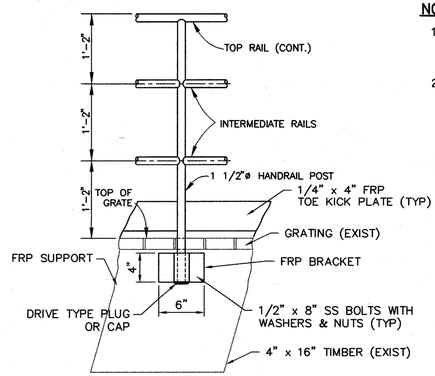

FRONT VIEW

NOTES:

1. EXCEPT WHERE SPECIFICALLY SHOWN OTHERWISE, DETAILS ON THIS SHEET APPLY TO THE ENTIRE SET OF DRAWINGS, WHETHER SPECIFICALLY REFERENCED OR NOT.
2. FOR USE IN EXISTING CONCRETE USE 3/4"x 7" SS HILTI QUIK BOLT OR EQUAL.
   FOR USE IN HOLLOW CONCRETE BLOCK USE 3/4" SS THROUGH BOLTS W/1/4"x 10"x 10" SS PLATE ON OPPOSITE WALL.
   FOR USE NEW CONCRETE USE 3/4" CAST IN PLACE ANCHOR BOLTS W/STANDARD HOOKS.

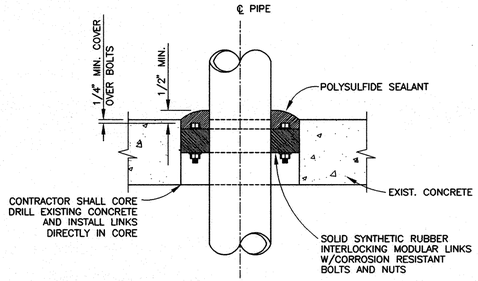

SLEEVE DETAIL 243
SCALE: NONE

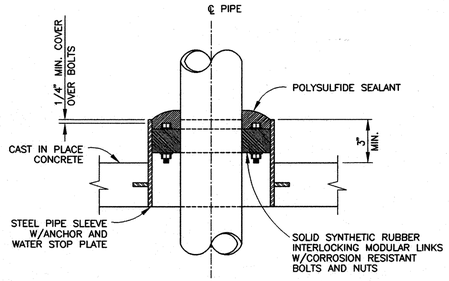

SLEEVE DETAIL 244
SCALE: NONE

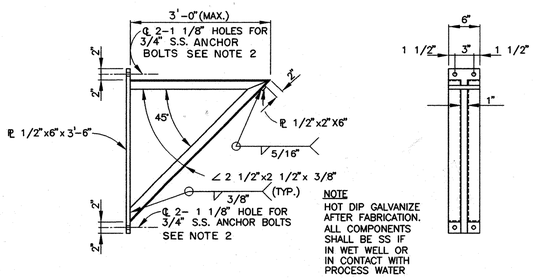

WALL BRACKET DETAIL 245
SCALE: NONE

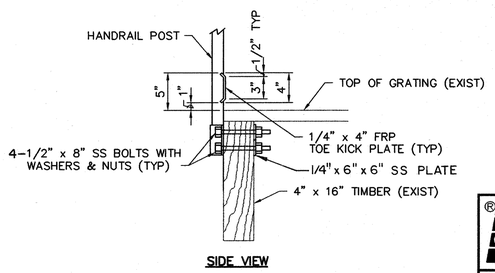

SIDE VIEW

TYP HANDRAIL SUPPORT DETAIL 246 M-09
SCALE: 1 1/2" = 1'-0"

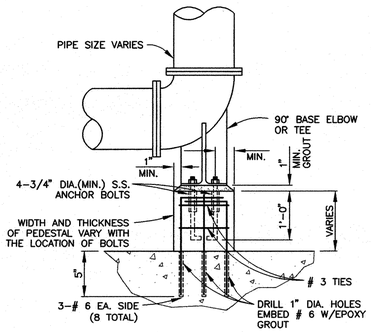

PIPE SUPPORT DETAIL 247
SCALE: NONE

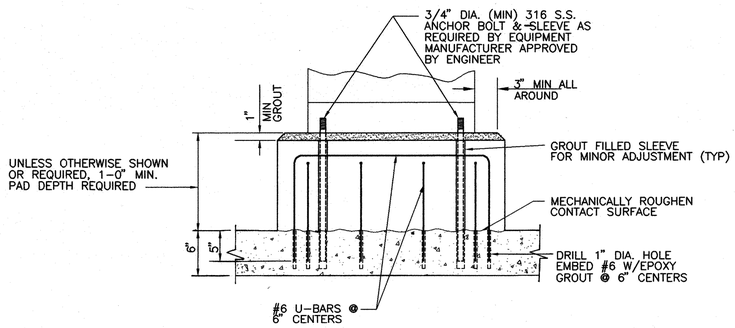

TYPICAL EQUIPMENT BASE DETAIL 248
SCALE: NONE

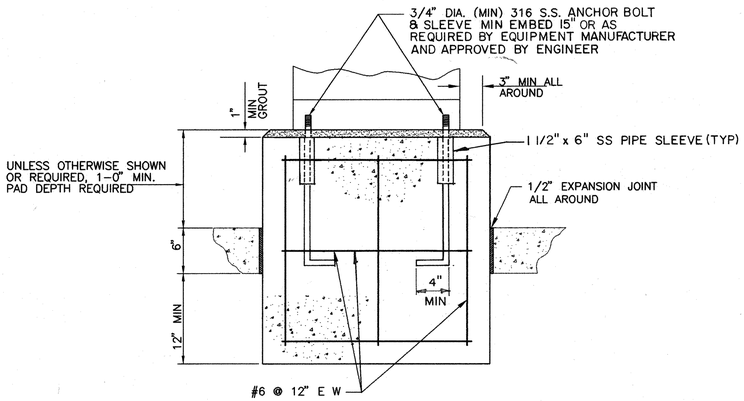

EQUIPMENT PAD DETAIL 249
SCALE: NONE

SEAL:

STATE OF TEXAS 7-1-97
ROGER C. BROWN
52635
REGISTERED PROFESSIONAL ENGINEER

CADD DWG FILE NO: 64300/S06.DWG

COHSTD.BDR

0 1 2 3 ORIGINAL SCALE IN INCHES FOR REDUCED PLANS

REV NO	DESCRIPTION	APP'D	DATE

CH2M HILL
7600 West Tidwell Road, Suite 400
Houston Tx 77040
713.462.0161

Binkley & Barfield, Inc.
Consulting Engineers
1710 Seamist Drive Houston, Texas 77008

ALMEDA SIMS
SLUDGE PROCESSING FACILITY IMPROVEMENTS

GFS NO R-0298-04-3
FILE NO: 4289-2

MISCELLANEOUS STANDARD DETAILS

CITY OF HOUSTON
DEPARTMENT OF PUBLIC WORKS AND ENGINEERING
ENGINEERING, CONSTRUCTION AND REAL ESTATE GROUP

SECTION APPROVALS

WATER ENGINEERING	TRAFFIC AND SIGNAL ENGINEERING
WASTEWATER ENGINEERING 7/1/97	STREET & BRIDGE ENGINEERING
STORM SEWER ENGINEERING	CONSTRUCTION 7/2/97

OTHER DEPARTMENTS

PLANNING AND DEVELOPMENT	SPONSOR DEPARTMENT

CITY ENGINEER 7/7/97 DATE

DIRECTOR OF PUBLIC WORKS AND ENGINEERING 7-8-97 DATE

SUBMITTED: XX
SCALE: NONE
DATE: JUNE 1997
SURVEY BY: XX
F B NO:

DESIGNED BY: RCB
DRAWN BY: AAA
DWG NO: S-06
SHEET NO 43 OF 56 SHEETS

CITY DWG NO: 33007

FILE DATE–OPERATOR:

ELECTRICAL PLAN SHEET SYMBOLS

SYMBOL	DESCRIPTION
A	FLORESCENT LIGHTING FIXTURE
A 3	BRACKET MOUNTED INCANDESCENT OR HIGH INTENSITY DISCHARGE FIXTURE (NUMBER INDICATES LIGHTING PANEL CIRCUIT NUMBER – TYPICAL FOR ALL LIGHTING & RECEPTACLE CIRCUITS)
	SINGLE CONVENIENCE RECEPTACLE
WP	DUPLEX CONVENIENCE RECEPTACLE (WP INDICATES CAST WEATHER PROOF OUTLET BOX & COVER)
A	SINGLE SPECIAL PURPOSE RECEPTACLE (LETTER INDICATES TYPE PER SCHEDULE)
	TELEPHONE UTILITY SYSTEM OUTLET
	LIGHTING PANEL
	UTILITY METERING CABINET
	TELEPHONE UTILITY SYSTEM BACKBOARD
	DISTRIBUTION PANEL
	CABINET OR PULL BOX
	UNFUSED SAFETY SWITCH – 3P, 30A, 600V UNLESS OTHERWISE INDICATED.
30	FUSED SAFETY SWITCH – 3P, 600V, 30A MINIMUM OR AS REQUIRED TO ACCOMMODATE FUSE SIZE INDICATED
	OUTLET OR JUNCTION BOX
	COMBINATION PROTECTIVE DEVICE & MAGNETIC STARTER
	SINGLE UNIT PUSHBUTTON STATION
	2–UNIT PUSHBUTTON STATION
	3–UNIT PUSHBUTTON STATION
5	ELECTRIC MOTOR – NUMBER INDICATES HORSEPOWER
SS	"HAND–OFF–AUTOMATIC" SELECTOR SWITCH
VS	VACUUM SWITCH
LS	LIMIT SWITCH
FS	FLOW SWITCH
PS	PRESSURE SWITCH
TS	TORQUE SWITCH
PE	PNEUMATIC/ELECTRIC SWITCH
PLS	PROXIMITY LIMIT SWITCH
DS	MAGNETIC REED DOOR SWITCH

SYMBOL	DESCRIPTION
FS	FLOAT SWITCH
EP	ELECTRO–PNEUMATIC VALVE
S	SOLENOID VALVE
T	ELECTRIC THERMOSTAT
T	TEMPERATURE ACTUATED DEVICE
$	SINGLE POLE TOGGLE SWITCH
$2	DOUBLE POLE TOGGLE SWITCH
$3	3 – WAY SWITCH
$T	MANUAL MOTOR STARTER WITH THERMAL ELEMENT
	BATTERY POWERED EMERGENCY LIGHTING FIXTURE
	UNIT HEATER
	CLASS 1, DIV I, CONDUIT SEAL
	EXPOSED CONDUIT
	EXPOSED PUMP CABLE
	CONDUIT CONCEALED IN FLOOR SLAB OR UNDER FLOOR SLAB. (CONDUITS 1–1/2" OR LARGER SHALL BE INSTALLED UNDER FLOOR SLAB). CONDUITS RUN UNDER FLOOR SLAB SHALL BE ENCASED IN CONCRETE. SEE NOTE 2
	HOMERUN TO PANEL OR MCC AS NOTED
A E0	CONCRETE ENCASED DUCTBANK (SECTION INDICATES CONDUIT CONFIGURATION & DESIGNATIONS)
A E0	EXPOSED CONDUIT BANK
	AIR TERMINAL
	GROUND ROD & WELL

CONDUIT SYSTEM NOTESNOTED

1. ANY CONDUIT WITHOUT FURTHER DESIGNATION INDICATES 2 #12 IN 3/4" CONDUIT. GREATER NUMBER OF WIRES ARE INDICATED AS FOLLOWS. (3 WIRES) (4 WIRES) ETC. LONGER HASHMARK INDICATES NEUTRAL CONDUCTOR, LONGER HASHMARK WITH DOT INDICATES GROUND CONDUCTOR. NO. INDICATES WIRE SIZE WHEN OTHER THAN #12 AWG.
2. CONDUITS IMBEDDED IN STRUCTURAL CONCRETE (FLOOR SLABS, ETC.) SHALL BE SO LOCATED AS NOT TO UNDULY IMPAIR THE STRENGTH OF THE CONSTRUCTION AND SHALL BE SPACED NOT LESS THAN TWO TIMES THE CONDUIT OD BETWEEN ADJACENT CONDUITS EXCEPT WHERE CROSSING OR OTHERWISE APPROVED BY THE ENGINEER.
3. WIRING FOR LIGHTING, RECEPTACLES AND OTHER MISCELLANEOUS CIRCUITS SHALL CONFORM TO THE CIRCUITING INDICATED ON THE DRAWINGS WITH ARRANGEMENT AND ROUTING AS REQUIRED. THE WIRING SHALL BE SO ARRANGED THAT NO MORE THAN 6 CURRENT CARRYING CONDUCTORS SHALL BE INSTALLED PER CONDUIT AND CIRCUITS OF DIFFERENT PANELS SHALL BE INSTALLED IN SEPARATE RACEWAYS.

WIRING DIAGRAM SYMBOLS

SYMBOL	DESCRIPTION
	CONTACT, NORMALLY OPEN
	CONTACT, NORMALLY CLOSED
	PUSHBUTTON, NORMALLY CLOSED
	PUSHBUTTON, NORMALLY OPEN
	SELECTOR SWITCH
OL'S X2	OVERLOADS
	FUSE
G	PILOT LIGHT, PUSH TO TEST
M	AUXILIARY STARTER CONTACTS
	PRESSURE SWITCH, OPENS ON RISE
	PRESSURE SWITCH, CLOSES ON RISE
	LIMIT SWITCH, NORMALLY CLOSED
	LIMIT SWITCH, NORMALLY OPEN
	LIMIT SWITCH, NORMALLY OPEN, HELD CLOSED
	LIMIT SWITCH, NORMALLY CLOSED, HELD OPEN
	TEMPERATURE ACTUATED SWITCH, OPENS ON RISE
	TEMPERATURE ACTUATED SWITCH, CLOSES ON RISE
	VACUUM SWITCH, OPENS ON RISE
	VACUUM SWITCH, CLOSES ON RISE
	FLOAT OPERATED SWITCH, OPENS ON RISE
	FLOAT OPERATED SWITCH, CLOSES ON RISE
	THERMAL OVERLOAD
	GROUND CONNECTION
	SOLENOID
G M	MOTORIZED TIME DELAY RELAY
TD	TIME DELAY RELAY
TD O–O–X	TIME DELAY CONTACT (O=OPEN, X=CLOSED, DESIGNATION INDICATES CONTACT POSITION WHEN RELAY IS RESET–TIMING–TIMED OUT)
R	AUXILIARY RELAY
ETM	ELAPSED TIME METER
	CONTROL POWER TRANSFORMER
M	MOTOR STARTER OPERATING COIL

WIRE NUMBER USED ON WIRING DIAGRAM & TERMINAL BLOCKS

RELAY DESIGNATION

RM 11 RLL 11A RRST R

SINGLE LINE DIAGRAM SYMBOLS

SYMBOL	DESCRIPTION
	SEPARABLE CONTACTS
	CIRCUIT BREAKER
	COMBINATION MOTOR STARTER
V	VOLTMETER
VS	VOLTMETER SWITCH
A	AMMETER
AS	AMMETER SWITCH
300:5 3	CURRENT TRANSFORMER (CT) DESIGNATION INDICATES QUANTITY & RATIO
	POTENTIAL TRANSFORMER
	LIGHTING TRANSFORMER
	POWER FACTOR CORRECTION CAPACITOR
47	PHASE FAILURE/UNDERVOLTAGE MONITOR RELAY
	FUSE
	MOTOR OVERLOAD
	FUSED DISCONNECT SWITCH

ABBREVIATIONS

A	AMP
ADJ	ADJUSTABLE
AFF	ABOVE FINISHED FLOOR
AI	ANALOG INPUT
ALT	ALTERNATOR
AO	ANALOG OUTPUT
APSL	AIR PRESSURE SWITCH LOW
C	CONDUIT
CA	CABLE
CAB	CABINET
CAT.	CATALOG
CB	CIRCUIT BREAKER
CKT	CIRCUIT
COMM	COMMUNICATIONS
CONT	CONTINUED
CPT–N	CONTROL POWER TRANSFORMER NEUTRAL
CPU	CENTRAL PROCESSING UNIT
CT	CURRENT TRANSFORMER
CU	COPPER
CW	COOL WHITE
DI	DISCRETE INPUT
DIREC	DIRECTIONAL
DIV	DIVISION
DN	DOWN
DO	DISCRETE OUTPUT
ETM	ELAPSED TIME METER
G.E.	GENERAL ELECTRIC
GFI	GROUND FAULT INTERRUPT
GND	GROUND
HL&P	HOUSTON LIGHTING & POWER
H–O–A	HAND OFF AUTO
HPS	HIGH PRESSURE SODIUM
INC	INCANDESCENT
JB	JUNCTION BOX
KA SYM	THOUSAND AMPS SYMMETRICAL
KS	KEY SWITCH
KVA	KILO–VOLT–AMPS
L	LINE
LIS	LEVEL INDICATING SWITCH
LISH	LEVEL INDICATING SWITCH HIGH
LISL	LEVEL INDICATING SWITCH LOW
LS	LIMIT SWITCH
LV	LOW VOLTAGE
LVN	LOW VOLTAGE NEUTRAL
M	MOTOR RUN CONTACT
mA	MILLIAMPERE
MA	MILLIAMPERE
MADC	MILLIAMPERE DIRECT CURRENT
MCC	MOTOR CONTROL CENTER
MCP	MOTOR CIRCUIT PROTECTOR
MIN.	MINUTES
MOR	MOTOR OVERLOAD RELAY
mS	MILLISECOND
MTH	MOTOR TEMPERATURE SWITCH
N	NEUTRAL
NA	NANOAMPERE
N.C.	NORMALLY CLOSED
NEC	NATIONAL ELECTRICAL CODE
NEUT	NEUTRAL
N.O.	NORMALLY OPEN
OL	OVERLOAD
P	POLE
PFR	PHASE FAILURE RELAY
PLC	PROGRAMMABLE LOGIC CONTROLLER
POS	POSITION
PRV	PRESSURE REDUCING VALVE
PVC	POLYVINYL CHLORIDE
PVC RGS	PVC COATED RIGID GALV CONDUIT
PWR	POWER
R	RELAY
RAPSL	AIR PRESSURE SWITCH LOW RELAY
REE	ELEC BLDG ENTRY AUX RELAY
RGS	RIGID GALVANIZED CONDUIT
RHLA	HIGH LEVEL ALARM RELAY
RLH	HIGH LEVEL AUX RELAY
RLL	LOW LEVEL AUX RELAY
RM	PUMP RUN AUX RELAY
RMOR	MOTOR OVERLOAD AUX RELAY
RMTH	MOTOR TEMPERATURE RELAY
RPLD	RUN PUMP LEAD RELAY
RPL1	RUN PUMP LAG 1 RELAY
RPL2	RUN PUMP LAG 2 RELAY
RPL3	RUN PUMP LAG 3 RELAY
RPL4	RUN PUMP LAG 4 RELAY
RPDLD	RUN PUMP DRY LEAD RELAY
RPDL1	RUN PUMP DRY LAG 1 RELAY
RPLD1	RUN PUMP DRY LAG 1 RELAY
RPLD2	RUN PUMP DRY LAG 2 RELAY
RPLC	PLC MODE AUX RELAY
RPLCOR	PLC OVERRIDE
RPLM	PLC PUMP RUN RELAY
RPLMP	BACKUP SYSTEM RUN RELAY
RR	RUN RELAY
RRST	PUMP RESET AUX RELAY
RTAH	TEMPERATURE ALARM AUX RELAY
RUV	UNDERVOLTAGE AUX RELAY
RWD	WATCHDOG RELAY
SEC	SECONDS
SL	SEAL LEAK SWITCH
SN	SOLID NEUTRAL
SP	SURGE PROTECTOR
SPST	SINGLE POLE SINGLE THROW
SS	SELECTOR SWITCH
SW	SWITCH
SWBT	SOUTHWESTERN BELL TELEPHONE
TEMP	TEMPERATURE
TD	TIME DELAY RELAY
TDLP	LOSS OF POWER TIME DELAY RELAY
TDRM	PUMP TIME DELAY RELAY
UPS	UNINTERRUPTED POWER SUPPLY
V	VOLTS
VA	VOLT–AMP
VAC	VOLTS ALTERNATING CURRENT
VDC	VOLTS DIRECT CURRENT
W	WATT OR WIRE
WM	WATT MISER (HIGH Z LAMP)

LIGHTING FIXTURE SCHEDULE

INCANDESCENT & HIGH INTENSITY DISCHARGE					FLUORESCENT				
TYPE	MFG & CATALOG NO.	LAMP SIZE	TYPE	REMARKS	TYPE	MFG & CATALOG NO.	LAMP SIZE	MOUNTING	REMARKS
A	LITHONIA CAT. # THR 400M PA 22 TB	MH 400W	CEILING ON THOMPSON HANGERS	ON THOMPSON HANGERS COMPLETE WITH LOWERING DEVICES	A	LITHONIA CAT. # 2SPG–3–32WT8–A12–120–ES	T8–32 WATT 82CRI, 4100K		
A1	SAME AS TYPE 'A' BUT WITH QUARTZ LAMP	MH 400W + 150W QUARTZ	PENDANT						
B	HUBBELL CAT. # LBM 150 SX–D–P	150W HPS, ANSI–S–55	PENDANT						
C	HUBBELL CAT. # LBM 150 SX–K–P	150W HPS, ANSI–S–55							

EMERGENCY LIGHTING FIXTURE SCHEDULE

TYPE	MFG & CATALOG NO.	DESCRIPTION
	DUAL–LITE AS–210–2 BIG BEAM 2M6N50–22 OR APPROVED EQUAL	TWO 6V, 12W SEALED BEAM PAR 36 HALOGEN LAMPS. 6V NICKEL CADMIUM BATTERY RATED TO SUPPORT 4 LAMPS FOR 1 1/2 HOURS. PROVIDE MOUNTING HARDWARE AS REQ'D

SEAL:

STATE OF TEXAS
LARRY M. BARFIELD
39337
REGISTERED
PROFESSIONAL ENGINEER
6-26-97

CADD DWG FILE NO: 64300/E01DWG

COHSTD.BDR

0 1 2 3 ORIGINAL SCALE IN INCHES FOR REDUCED PLANS

REV NO	DESCRIPTION	APP'D	DATE

CH2M HILL
7600 West Tidwell Road, Suite 400
Houston Tx 77040
713.462.0161

Binkley & Barfield, Inc.
Consulting Engineers
1710 Seamist Drive Houston, Texas 77008

ALMEDA SIMS
SLUDGE PROCESSING FACILITY
IMPROVEMENTS

GFS NO R–0298–04–3
FILE NO: 4289–2

ELECTRICAL SYMBOLS, LEGEND
LIGHTING FIXTURE SCHEDULES
AND ABBREVIATIONS

CITY OF HOUSTON
DEPARTMENT OF PUBLIC WORKS AND ENGINEERING
ENGINEERING, CONSTRUCTION AND REAL ESTATE GROUP

SECTION APPROVALS

WATER ENGINEERING — TRAFFIC AND SIGNAL ENGINEERING

7/1/97
WASTEWATER ENGINEERING — STREET & BRIDGE ENGINEERING

Russell C. Mois 7/8/97
STORM SEWER ENGINEERING — CONSTRUCTION

OTHER DEPARTMENTS

PLANNING AND DEVELOPMENT — SPONSOR DEPARTMENT

7/7/97
CITY ENGINEER — DATE

7-8-97
DIRECTOR OF PUBLIC WORKS AND ENGINEERING — DATE

SUBMITTED:
SCALE: NONE
DATE: JUNE 1997
SURVEY BY:
F B NO:

DESIGNED BY: KKS
DRAWN BY: RPD
DWG NO: E–01
SHEET NO 44 OF 56 SHEETS
CITY DWG NO:
33007

FILE DATE--OPERATOR: 06/24/97--AA

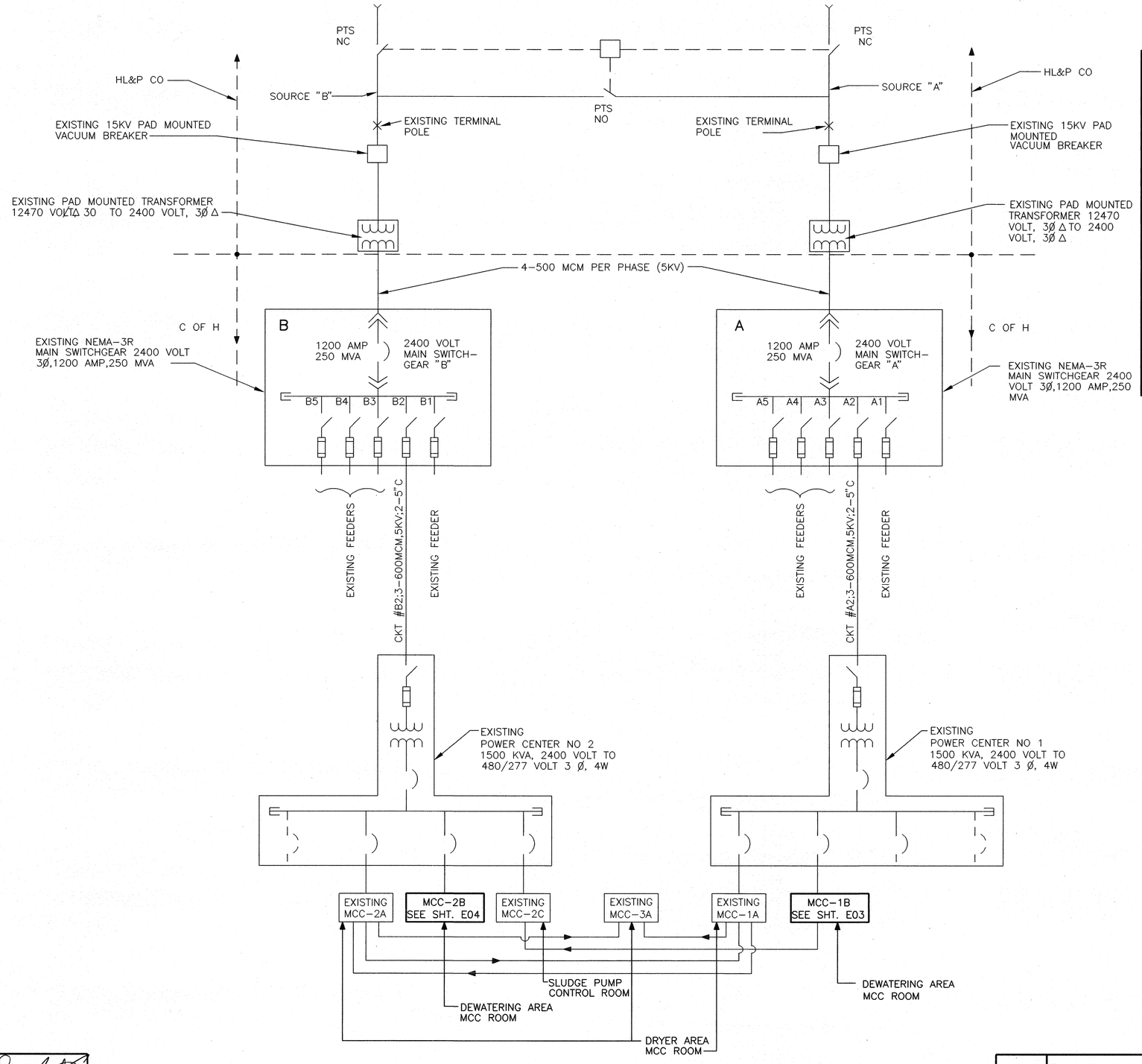

KEY PLAN

ELECTRICAL LOAD ANALYSIS

SERVICE VOLTAGE: 2400 VOLT, THREE PHASE, THREE WIRE (EXISTING)
OCCUPANCY: CITY OF HOUSTON, WASTEWATER AND SLUDGE DISPOSAL FACILITY
AREA:

LOAD DESCRIPTION:	NEC CODE LOAD (KVA)	CONNECTED LOAD (KVA)	DIVERSITY FACTOR	DESIGN LOAD: KVA	PHASE "A" AMPS	PHASE "B" AMPS	PHASE "C" AMPS	NEUTRAL AMPS	REMARKS:
EXISTING									
PEAK DEMAND FOR PERIOD OF 14 MONTHS	* 3076		1.25	3845	925	925	925	–	*PER H.L.&P. CO.
PROPOSED ADDITION									
MOTOR LOAD		201	1.00	201	48	48	48	–	
MISCELLANEOUS LOAD		30	1.00	30	9	9	9	–	
HVAC LOAD		15	1.00	15	4	4	4	–	
TOTAL (EXISTING + PROPOSED)				4091	986	986	986	–	
LOAD									
DEMOLITION									
MOTOR LOAD		(927)		(927)	(223)	(223)	(223)	–	
TOTAL				3164	763	763	763	–	
EXISTING SERVICE DERIVED FROM TWO H.L.&P. CO. SOURCES WITH									
ONE COMMON METER. EACH SOURCE OF SERVICE HAS 4-500 MCM									
(5KV) THEREFORE PER PHASE (1500 AMP) TOTAL SERVICE ENTRANCE									
CAPACITY.					3000	3000	3000	–	

SEAL
STATE OF TEXAS
LARRY M. BARFIELD
39337
REGISTERED PROFESSIONAL ENGINEER
6-25-97

CADD DWG FILE NO: 64300/E02.DWG

COHSTD.BDR

0 1 2 3 ORIGINAL SCALE IN INCHES FOR REDUCED PLANS

REV NO	DESCRIPTION	APP'D	DATE

CH2M HILL
7600 West Tidwell Road, Suite 400
Houston Tx 77040
713.462.0161

Binkley & Barfield, Inc.
Consulting Engineers
1710 Seamist Drive Houston, Texas 77008

ALMEDA SIMS SLUDGE PROCESSING FACILITY IMPROVEMENTS

GFS NO R-0298-04-3
FILE NO: 4289-2

ELECTRICAL POWER DISTRIBUTION ONE LINE DIAGRAM – KEY PLAN

CITY OF HOUSTON

DEPARTMENT OF PUBLIC WORKS AND ENGINEERING
ENGINEERING, CONSTRUCTION AND REAL ESTATE GROUP

SECTION APPROVALS

WATER ENGINEERING
TRAFFIC AND SIGNAL ENGINEERING
WASTEWATER ENGINEERING 7/1/97
STREET & BRIDGE ENGINEERING
STORM SEWER ENGINEERING
CONSTRUCTION Russell E. Mais 7/2/97

OTHER DEPARTMENTS

PLANNING AND DEVELOPMENT
SPONSOR DEPARTMENT

CITY ENGINEER 7/7/97 DATE

DIRECTOR OF PUBLIC WORKS AND ENGINEERING 7-8-97 DATE

SUBMITTED:
SCALE: NONE
DATE: JUNE 1997
SURVEY BY:
F B NO:

DESIGNED BY: KKS
DRAWN BY: RPD
DWG NO: E-02
SHEET NO 45 OF 56 SHEETS
CITY DWG NO: 33007

FILE DATE--OPERATOR-- 06/24/97-AAA

1200 AMP, 480V, 3 Ø COPPER BUSS BRACED FOR 42.000 AMPERES RMS, SYMMETRICAL EXISTING MCC-1B

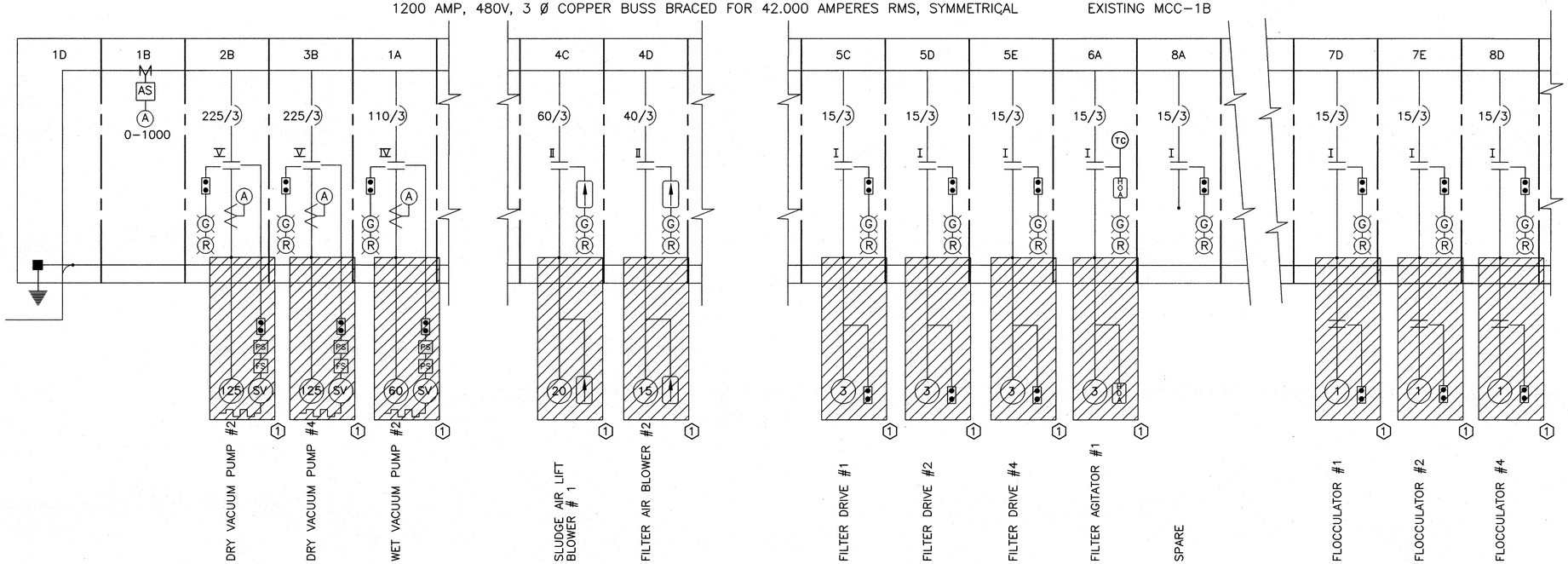

1200 AMP, 480V, 3 0 COPPER BUSS BRACED FOR 42.000 AMPERES RMS, SYMMETRICAL EXISTING MCC-1B

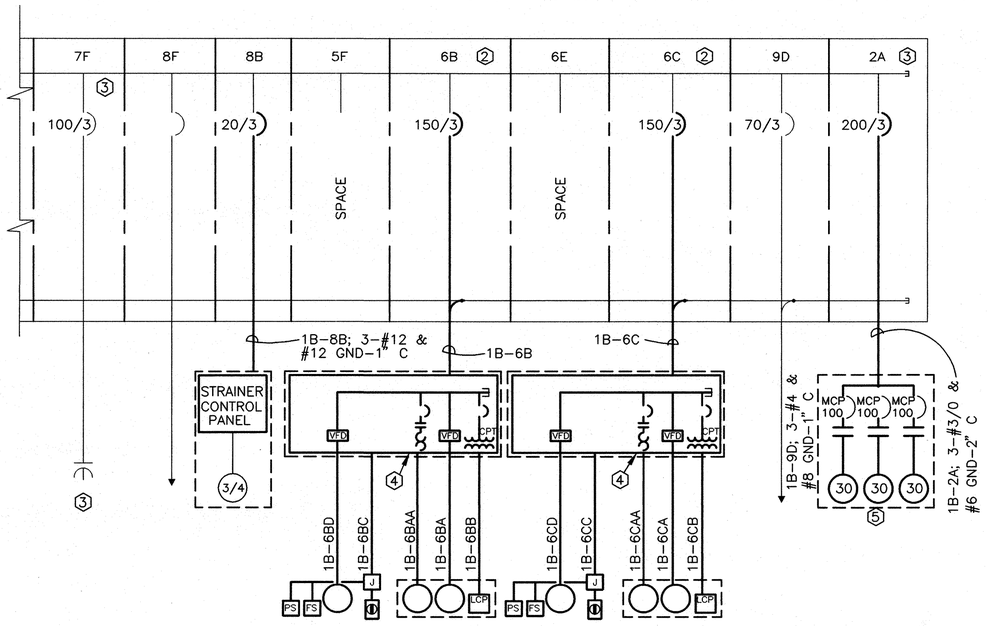

NOTES:

1. REMOVE EXISTING POWER AND CONTROL WIRING FROM MCC TO EQUIPMENT. SEE EQUIPMENT LOCATION ON DEMOLITION PLAN AND MCC ELEVATION ON SHEET E-5.
2. REMOVE EXISTING FILTER AGITATOR NO 2 AND 4 STARTER AND CONTROLS FROM "6B" AND "6C" SECTIONS AND INSTALL NEW FEEDER BREAKERS FOR BELT FILTER PRESS NO 2 AND 4 IN "6B" AND "6C" SPACE.
3. REMOVE EXISTING BRANCH CIRCUIT BREAKER AND CONDUCTORS. INSTALL NEW CAPACITOR AND BRANCH CIRCUIT AS SHOWN.
4. PACKAGE UNIT FURNISHED BY EQUIPMENT SUPPLIER WITH CONTROL PANELS. COORDINATE AND PROVIDE BRANCH CIRCUIT WITH PROTECTIVE DEVICES. CONTROL PANEL SHALL HAVE VARIABLE FREQUENCY DRIVES AND CONTROLS TO OPERATE THE SYSTEM MANUALLY AND AUTOMATICALLY.
5. PACKAGE UNIT FURNISHED BY EQUIPMENT SUPPLIER WITH CONTROL PANELS. COORDINATE AND PROVIDE BRANCH CIRCUIT, PROTECTIVE DEVICES, AND CONTROLS TO OPERATE THE SYSTEM MANUALLY AND AUTOMATICALLY.

CONDUIT & CABLE SCHEDULE
CIRCUIT NO.
1B-6BB; 2-1 1/2" (CONTROLS)
1B-6BD; 3-#6 & 1-#8 GND-1" C
1B-6BC; 8-#14 & 1-#14 GND-1" C
1B-6BA; 3-#6 & 1-#8 GND-1" C
1B-6BAA; 5-#12 & 1-#12 GND-3/4" C 3-#12 & 1-#12 GND-3/4" C
1B-6CB; 2-1 1/2" (CONTROLS)
1B-6CD; 3-#6 & 1-#8 GND-1" C
1B-6CC; 8-#14 & 1-#14 GND-1" C
1B-6CA; 3-#6 & 1-#8 GND-1" C
1B-6CAA; 5-#12 & 1-#12 GND-3/4" C 3-#12 & 1-#12 GND-3/4" C
1B-6C; 3-#1/0 & 1-#6 GND-1 1/2" C
1B-6B; 3-#1/0 & 1-#6 GND-1 1/2" C

REV NO	DESCRIPTION	APP'D	DATE

CH2M HILL
7600 West Tidwell Road, Suite 400
Houston Tx 77040
713.462.0161

Binkley & Barfield, Inc.
Consulting Engineers
1710 Seamist Drive Houston, Texas 77008

ALMEDA SIMS
SLUDGE PROCESSING FACILITY IMPROVEMENTS

GFS NO R-0298-04-3
FILE NO: 4289-2

ELECTRICAL
ONE LINE DIAGRAM
MOTOR CONTROL CENTER 1B

CITY OF HOUSTON
DEPARTMENT OF PUBLIC WORKS AND ENGINEERING
ENGINEERING, CONSTRUCTION AND REAL ESTATE GROUP

SECTION APPROVALS

WATER ENGINEERING	TRAFFIC AND SIGNAL ENGINEERING
7/1/97	
WASTEWATER ENGINEERING	STREET & BRIDGE ENGINEERING
	7/8/97
STORM SEWER ENGINEERING	CONSTRUCTION

OTHER DEPARTMENTS

PLANNING AND DEVELOPMENT	SPONSOR DEPARTMENT

CITY ENGINEER — 7/7/97 DATE

DIRECTOR OF PUBLIC WORKS AND ENGINEERING — 7-8-97 DATE

SUBMITTED:
SCALE: NONE
DATE: JUNE 1997
SURVEY BY:
F B NO:

DESIGNED BY: KKS
DRAWN BY: RPD
DWG NO: E-03
SHEET NO 46 OF 56 SHEETS

CITY DWG NO: 33007

SEAL
STATE OF TEXAS
LARRY M. BARFIELD
39337
REGISTERED PROFESSIONAL ENGINEER
6-26-97

CADD DWG FILE NO: 64300/E03.DWG

COHSTD.BDR

0 1 2 3 ORIGINAL SCALE IN INCHES FOR REDUCED PLANS

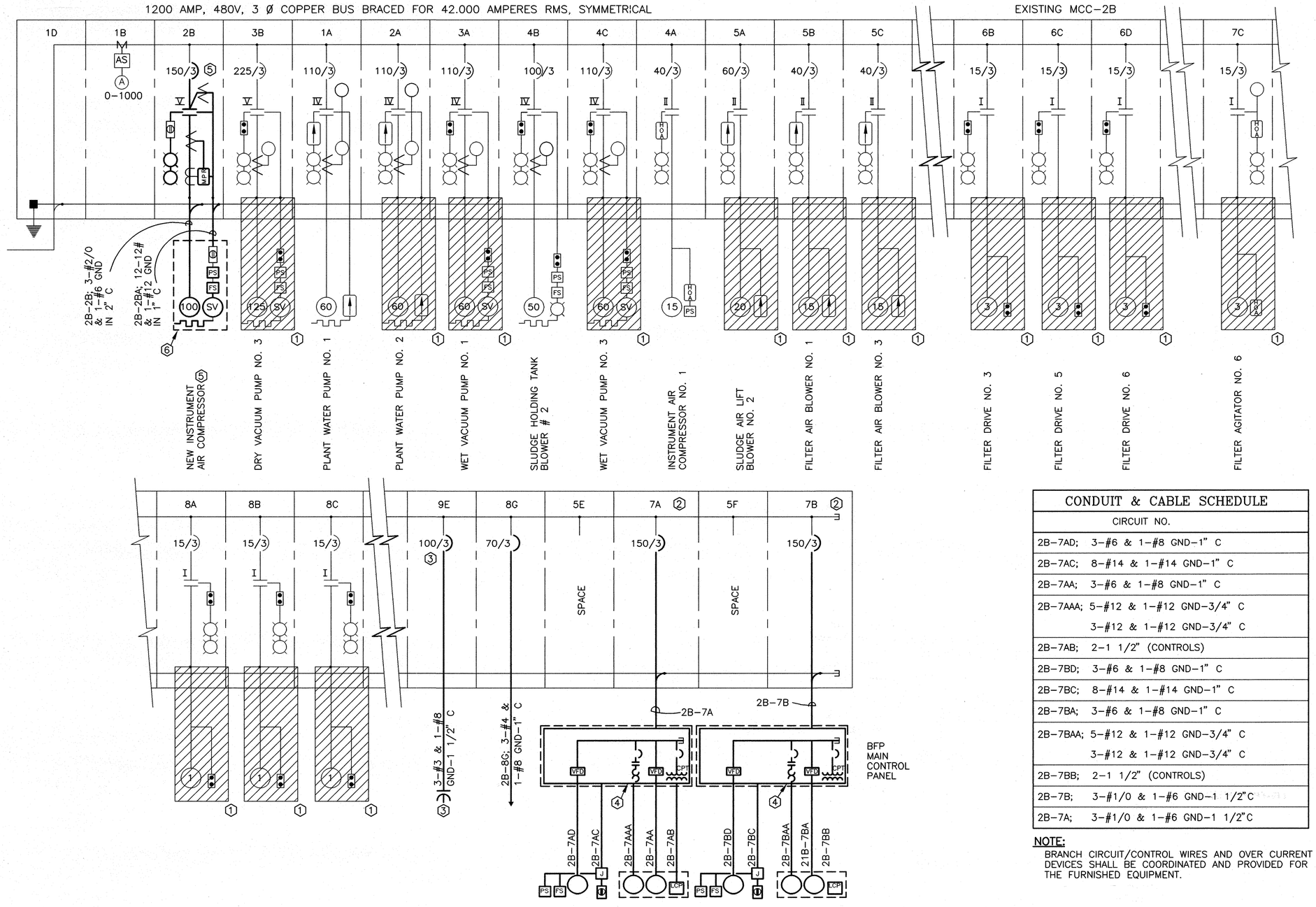

NOTES:

1. REMOVE EXISTING POWER AND CONTROL WIRING FROM MCC TO THE EQUIPMENT. SEE EQUIPMENT LOCATION ON DEMOLITION PLAN AND MCC ELEVATION ON SHEET E-5.
2. REMOVE EXISTING FILTER AGITATOR NO 5 AND STARTER AND CONTROLS FROM "7A" AND "7B" SECTIONS AND INSTALL NEW FEEDER BREAKERS FOR BELT FILTER PRESS NO 3 AND 6 IN "7A" AND "7B" SPACE.
3. REMOVE EXISTING BRANCH CIRCUIT BREAKER AND CONDUCTORS. INSTALL NEW CAPACITOR AND BRANCH CIRCUIT AS SHOWN.
4. PACKAGE UNIT FURNISHED BY EQUIPMENT SUPPLIER WITH CONTROL PANELS. COORDINATION AND PROVIDE BRANCH CIRCUIT WITH PROTECTIVE DEVICES. CONTROL PANEL SHALL HAVE VARIABLE FREQUENCY DRIVES AND CONTROLS TO OPERATE THE SYSTEM MANUALLY AND AUTOMATICALLY.
5. REMOVE EXISTING STARTER, CONTROLS AND WIRING FOR THE DRY VACUUM PUMP NO 1 AND INSTALL NEW SIZE V STARTER WITH MULTILIN 269 MOTOR PROTECTION RELAY (MPR) AND CONTROLS FOR THE NEW INSTRUMENT AIR COMPRESSOR.
6. PACKAGE UNIT FURNISHED BY THE EQUIPMENT SUPPLIER. STARTER AND CONTROLS AND POWER REQUIREMENTS SHALL BE AS REQUIRED FOR THE EQUIPMENT FURNISHED.

CONDUIT & CABLE SCHEDULE

CIRCUIT NO.
2B-7AD; 3-#6 & 1-#8 GND-1" C
2B-7AC; 8-#14 & 1-#14 GND-1" C
2B-7AA; 3-#6 & 1-#8 GND-1" C
2B-7AAA; 5-#12 & 1-#12 GND-3/4" C 3-#12 & 1-#12 GND-3/4" C
2B-7AB; 2-1 1/2" (CONTROLS)
2B-7BD; 3-#6 & 1-#8 GND-1" C
2B-7BC; 8-#14 & 1-#14 GND-1" C
2B-7BA; 3-#6 & 1-#8 GND-1" C
2B-7BAA; 5-#12 & 1-#12 GND-3/4" C 3-#12 & 1-#12 GND-3/4" C
2B-7BB; 2-1 1/2" (CONTROLS)
2B-7B; 3-#1/0 & 1-#6 GND-1 1/2"C
2B-7A; 3-#1/0 & 1-#6 GND-1 1/2"C

NOTE:
BRANCH CIRCUIT/CONTROL WIRES AND OVER CURRENT DEVICES SHALL BE COORDINATED AND PROVIDED FOR THE FURNISHED EQUIPMENT.

CH2M HILL
7600 West Tidwell Road, Suite 400
Houston Tx 77040
713.462.0161

Binkley & Barfield, Inc.
Consulting Engineers
1710 Seamist Drive Houston, Texas 77008

ALMEDA SIMS
SLUDGE PROCESSING FACILITY IMPROVEMENTS

GFS NO R-0298-04-3
FILE NO: 4289-2

ELECTRICAL
ONE LINE DIAGRAM
MOTOR CONTROL CENTER 2B

CITY OF HOUSTON
DEPARTMENT OF PUBLIC WORKS AND ENGINEERING
ENGINEERING, CONSTRUCTION AND REAL ESTATE GROUP

SECTION APPROVALS

WATER ENGINEERING	TRAFFIC AND SIGNAL ENGINEERING
7/1/97	
WASTEWATER ENGINEERING	STREET & BRIDGE ENGINEERING
	7/3/97
STORM SEWER ENGINEERING	CONSTRUCTION

OTHER DEPARTMENTS

PLANNING AND DEVELOPMENT	SPONSOR DEPARTMENT

CITY ENGINEER — DATE 7/7/97

DIRECTOR OF PUBLIC WORKS AND ENGINEERING — DATE 7-8-97

SEAL
LARRY M. BARFIELD
39337
REGISTERED PROFESSIONAL ENGINEER
6-25-97

CADD DWG FILE NO: 64300/E04.DWG

COHSTD.BDR

0 1 2 3 ORIGINAL SCALE IN INCHES FOR REDUCED PLANS

REV NO	DESCRIPTION	APP'D	DATE

SUBMITTED:
SCALE: NONE
DATE: JUNE 1997
SURVEY BY:
F B NO:

DESIGNED BY: KKS
DRAWN BY: RPD
DWG NO: E-04
SHEET NO 47 OF 56 SHEETS
CITY DWG NO: 33007

FILE DATE--OPERATOR: 06/24/97-AAA

1	2	3	4	5	6	7	8	9
1A WET VAC NO.2 SPARE	2A PLANT WATER PUMP NO.3 (TRIPLEX) (1)	3A SLUDGE HOLDING TANK BLOWER NO.3	4A INSTRUMENT AIR COMPRESSOR NO.2	5A ROOF VENT FAN NO.1	6A FILTER AGITATOR NO.1 SPARE	7A POLYMER PUMP NO.1	8A SPARE	9A SPARE
			4B INSTRUMENT AIR COMPRESSOR NO.3	5B ROOF VENT FAN NO.3	6B BELT FILTER PRESS NO.2 (2)	7B MONORAIL	8B (4) STRAINER	9B SPARE
1B METER COMP.	2B DRY VAC NO.2	3B DRY VAC NO.4	4C AIRLIFT BLOWER NO.1 SPARE	5C FILTER DRIVE NO.1 SPARE		7C 7.4 HP FLYGT PUMP	8C 120/240 VOLT 1PHASE CIRCUITS	
						7D FLOCCULATOR NO.1 SPARE	8D FLOCCULATOR NO.4 SPARE	9C FILTER AIRLIFT PUMP NO.1
1C CONNECTION FOR MONO RAIL			4D FILTER AIR BLOWER NO.2 SPARE	5D FILTER DRIVE NO.2 SPARE	6C BELT FILTER PRESS NO.4 (2)	7E FLOCCULATOR NO.2 SPARE	8E SPARE	
1D INCOMING LINE	SPARE	SPARE	4E PLANT AIR COMPRESSOR NO.1	5E FILTER DRYER NO. 4 SPARE	6D SPARE	7F CAPACITOR BKR (5)	8F STANDBY FDR TO MCC-2C	9D (4) TRANSFER SWITCH FDR
			4F PLANT AIR COMPRESSOR NO.3	5F SPARE (3)	6E SPARE (3)			9E FILTRATE PIT BLOWER

ELEVATION
MOTOR CONTROL CENTER-1B (EXISTING)

1	2	3	4	5	6	7	8	9
1A PLANT WATER PUMP NO.1	2A SPARE	3A WET VACUUM NO.1 SPARE	4A INSTRUMENT AIR COMPRESSOR NO.1	5A AIR LIFT BLOWER NO.2 SPARE	6A ROOF VENT FAN NO.2	7A (2) BELT PRESS NO. 3	8A FLOCCULATOR NO.3 SPARE	9A FILTRATE BLOWER NO.2
			4B SLUDGE HOLDING TANK BLOWER NO.2	5B FILTER AIR BLOWER NO.1 SPARE	6B FILTER DRIVE NO.3 SPARE	7B (2) BELT FILTER PRESS NO. 6	8B FLOCCULATOR NO.5 SPARE	
				5C FILTER AIR BLOWER NO.3 SPARE	6C FILTER DRIVE NO.5 SPARE		8C FLOCCULATOR NO.6 SPARE	9B LIGHTING PANEL FEED
1B METER	2B NEW AIR COMPRESSOR (6)	3B DRY VACUUM NO.3		5D PLANT AIR COMPRESSOR NO.2	6D FILTER DRIVE NO.6 SPARE	7C FILTER AGITATOR NO.8	8D SPARE	9C 480 VOLT RECEPTACLE IN EQUIP RM 9D
1C MONO RAIL			4C WET VACUUM NO.3 SPARE	5E SPARE	6E SPARE	SPARE	8E JIB CRANE	9E
1D INCOMING LINE		SPARE		SPARE		7D SPARE	8F SUMP PUMP	CAPACITOR BKR (5)
				5F SPARE	6F POLYMER PUMP NO.2		8G (4) TRANSFER SWITCH FDR.	

ELEVATION
MOTOR CONTROL CENTER-2B (EXISTING)

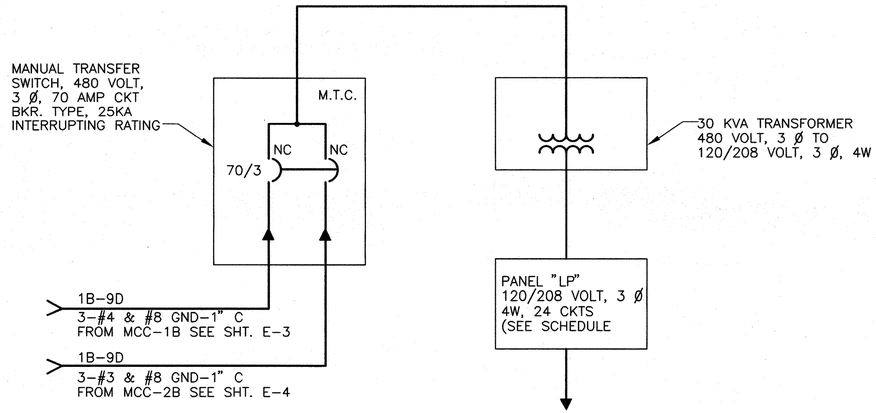

RISER DIAGRAM MANUAL TRANSFER SWITCH AND MINI-POWER/CENTER

PANEL: LP SCHEDULE LOCATION: CONTROL ROOM

120/208 VOLT 3 PHASE 4 WIRE 150 AMP. BUS 110 AMP MAIN BKR/MLO 10,000 AMPS. RMS. SYM.

DESCRIPTION	LOAD WATTS	WIRE	BKR SIZE	CKT. NO.	PHASE LOADING AMPS. A	B	C	CKT. NO.	BKR SIZE	WIRE	LOAD WATTS	DESCRIPTION
SSL-5000 A,B,C	SPARE	12	20/1	1				2	20/1	12	1200	PDU-3100A
SSL-5000 D,E,F	SPARE	12	20/1	3				4	20/1	12	1200	PDU-3100B
FSL-1201,1301,1401,1601	FSL-1301-2P	12	20/1	5				6	20/1	12	600	PDU-3320
BFP-2200 LCP	FSL-1401-2P	12	20/1	7				8	20/1	12	600	PDU-3330
BFP-2300 LCP	LOCAL C-P-2300	12	20/1	9				10	20/1	12	600	PDU-3340
BFP-2400 LCP	LOCAL C-P-2400	12	20/1	11				12	20/1	12	600	PDU-3360
BFP-2600 LCP	SPARE	12	20/1	13				14	15/2	12	1130	MIXER(PM-3210)
	SPARE			15				16	15/2	12	1130	MIXER(PM-3210)
	SPARE			17				18	20/1	12	600	POLY 1ST STG. CTRL. PNL.
	MIXER			19				20	20/1	12	75	EMERG. LTG. UNIT
	MIXER			21				22				
	MIXER			23				24				
TOTAL CONNECTED LOAD												
TOTAL CONNECTED LOAD AT 125%												

DESCRIPTION

2	PDU 3100B
4	LOCAL CONTROL PANEL (2600)
6	PDU 3100A
8	PDU 3400
10	SPARE
12	PDU 3300
14	SPARE
16	FL-1601/CONV F. ZERO SPEED
18	V.P.S
20	FL-1201/CONV. ZERO SPEED
22	LOCAL CONTROL PANEL (2200)
26	PDU 2600
	PDU 2600

EXIST. EQUIP. TO REMAIN AT THE END OF CONSTRUCTION

REMOVE EXISTING POWER AND CONTROL WIRING TO EQUIP. (DEMOLITION). PROVIDE NEW NAME PLATE AS SHOWN

NEW DEVICE

NOTES:

1. REMOVE EXISTING PLANT WATER PUMP NO. 3 STARTER AND INSTALL FEEDER BREAKER FOR TRIPLEX PUMPS.
2. REPLACE EXISTING FILTER AGITATOR STARTER WITH NEW FEEDER BREAKER FOR BELT FILTER PRESS.
3. NOT USED
4. INSTALL NEW FEEDER BREAKER IN THE EXISTING SPACE.
5. REPLACE EXISTING CAPACITOR BREAKER WITH NEW 100 AMP, 3 POLE, 480 VOLT BREAKER SEE LINE DIAGRAM.
6. SEE ONE LINE DIAGRAM ON DWG E-04 SPACE.

SEAL: STATE OF TEXAS LARRY M. BARFIELD 39337 REGISTERED PROFESSIONAL ENGINEER 6-25-97

CADD DWG FILE NO: 64300/E05.DWG

COHSTD.BDR

0 1 2 3 ORIGINAL SCALE IN INCHES FOR REDUCED PLANS

REV NO	DESCRIPTION	APP'D	DATE

CH2M HILL
7600 West Tidwell Road, Suite 400
Houston Tx 77040
713.462.0161

Binkley & Barfield, Inc.
Consulting Engineers
1710 Seamist Drive Houston, Texas 77008

ALMEDA SIMS
SLUDGE PROCESSING FACILITY IMPROVEMENTS

GFS NO R-0298-04-3
FILE NO: 4289-2

ELECTRICAL
PANEL SCHEDULES
AND MCC ELEVATIONS

CITY OF HOUSTON
DEPARTMENT OF PUBLIC WORKS AND ENGINEERING
ENGINEERING, CONSTRUCTION AND REAL ESTATE GROUP

SECTION APPROVALS

WATER ENGINEERING	TRAFFIC AND SIGNAL ENGINEERING
WASTEWATER ENGINEERING 7/1/97	STREET & BRIDGE ENGINEERING
STORM SEWER ENGINEERING	CONSTRUCTION 7/3/97

OTHER DEPARTMENTS

PLANNING AND DEVELOPMENT	SPONSOR DEPARTMENT

CITY ENGINEER 7/7/97 DATE

DIRECTOR OF PUBLIC WORKS AND ENGINEERING 7-8-97 DATE

SUBMITTED:
SCALE: NONE
DATE: JUNE 1997
SURVEY BY:
F B NO:

DESIGNED BY: KKS
DRAWN BY: AAA
DWG NO: E-05
SHEET NO 48 OF 56 SHEETS
CITY DWG NO: 33007

FILE DATE--OPERATOR: 06/24/97--AAA

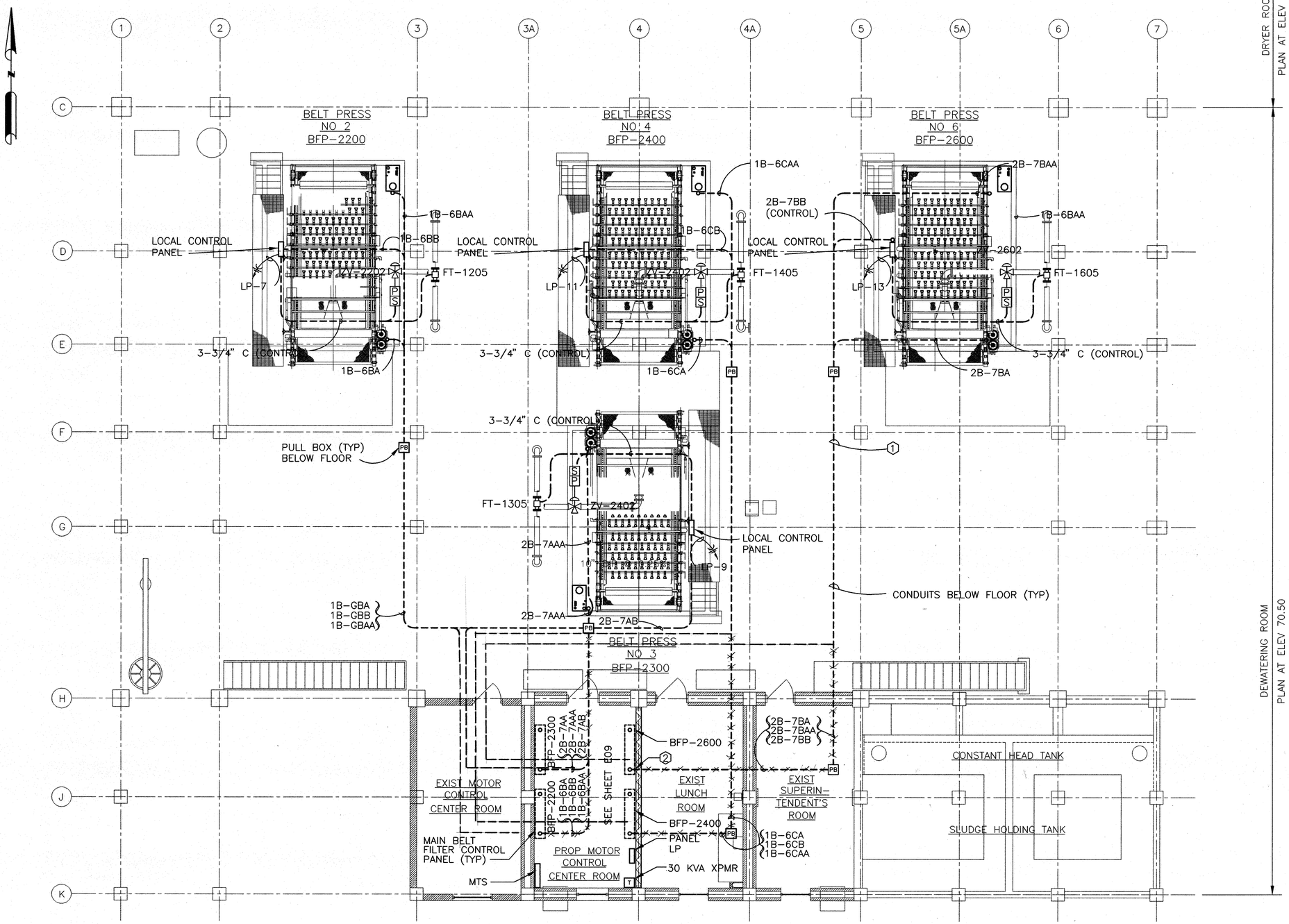

NOTES:

1. CONDUITS SHALL BE SUPPORTED BY **STAINLESS STEEL HANGERS SUSPENDED FROM CEILING.**
2. EXACT LOCATION OF CONDUIT STUB-UP SHALL BE COORDINATED WITH THE FURNISHED EQUIPMENT SHOP DRAWINGS.
3. CONDUIT SUPPORT CLAMPS/CLIPS, AND FASTENERS SHALL BE STAINLESS STEEL-304. FURNISHED EQUIPMENT SHOP DRAWINGS.

CH2M HILL
7600 West Tidwell Road, Suite 400
Houston Tx 77040
713.462.0161

Binkley & Barfield, Inc.
Consulting Engineers
1710 Seamist Drive Houston, Texas 77008

ALMEDA SIMS
SLUDGE PROCESSING FACILITY IMPROVEMENTS

GFS NO R-0298-04-3
FILE NO: 4289-2

DEWATERING FACILITY
ELEVATION 70.50
ELECTRICAL PLAN

CITY OF HOUSTON
DEPARTMENT OF PUBLIC WORKS AND ENGINEERING
ENGINEERING, CONSTRUCTION AND REAL ESTATE GROUP

SECTION APPROVALS

WATER ENGINEERING	TRAFFIC AND SIGNAL ENGINEERING
WASTEWATER ENGINEERING 7/1/97	STREET & BRIDGE ENGINEERING
STORM SEWER ENGINEERING	CONSTRUCTION 7/3/97

OTHER DEPARTMENTS

PLANNING AND DEVELOPMENT	SPONSOR DEPARTMENT

CITY ENGINEER — DATE 7/7/97

DIRECTOR OF PUBLIC WORKS AND ENGINEERING — DATE 7-8-97

SEAL: STATE OF TEXAS — LARRY M. BARFIELD — 39337 — REGISTERED PROFESSIONAL ENGINEER — 6-25-97

REV NO	DESCRIPTION	APP'D	DATE

SUBMITTED:
SCALE: 3/16" = 1'-0"
DATE: JUNE 1997
SURVEY BY:
F B NO:

DESIGNED BY: HJK
DRAWN BY: AAA
DWG NO: E-06
SHEET NO 49 OF 56 SHEETS
CITY DWG NO: 33007

CADD DWG FILE NO: 64300/E06.DWG

COHSTD.BDR

0 1 2 3

ORIGINAL SCALE IN INCHES FOR REDUCED PLANS

FILE DATE--OPERATOR: 06/24/97-AAA

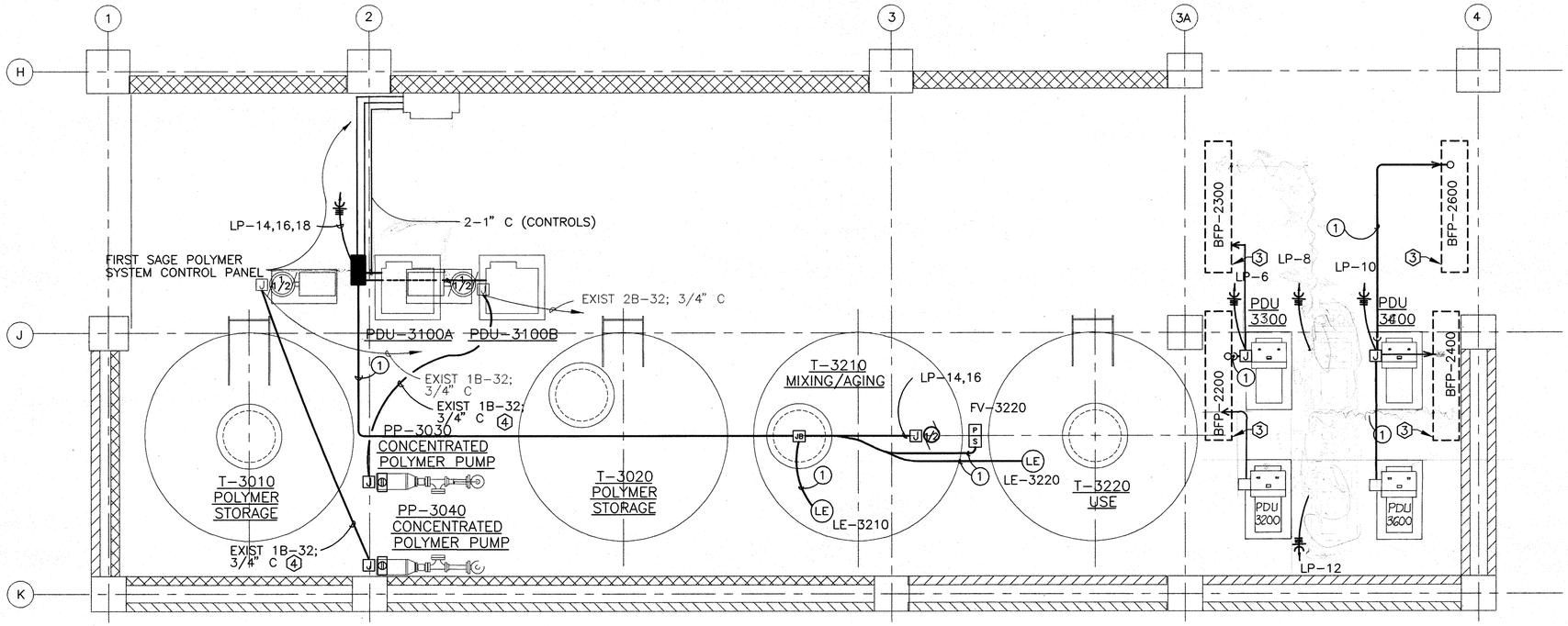

PLAN BELOW ELEVATION 60.00
SCALE: 3/8" = 1'-0"

NOTES:

1. EXACT LOCATIONS OF CONDUIT STUB-UPS SHALL BE COORDINATED WITH THE FURNISHED EQUIPMENT.
2. HORIZONTAL RUNS OF CONDUITS SHALL BE SUPPORTED BY **STAINLESS STEEL** HANGERS FROM CEILING AND VERTICAL DROPS TO EQUIPMENT SHALL BE SUPPORTED BY **STAINLESS STEEL** UNISTRUT FROM FLOOR TO CEILING.
3. BELT FILTER PRESS MAIN CONTROL PANEL (BFP-2200, 2300, 2400, 2600) ON PROPOSED CONTROL ROOM (SEE DWG E-09).
4. INSTALL NEW POWER AND CONTROL CIRCUIT CONDUCTORS FROM MCC 1B & 2B TO THE PROPOSED POLYMER PUMP MOTORS.

CONDUIT & CABLE SCHEDULE	
TAG	DESCRIPTION
1	2-#14 & 1-#14 GND-3/4"; 4 PR (S) #16-1" C
2	LP-14, 16, 3-#12 & 1-#12 GND-3/4" C AND (1) 12 PR (S) #16 1 1/2" C

CH2M HILL
7600 West Tidwell Road, Suite 400
Houston Tx 77040
713.462.0161

Binkley & Barfield, Inc.
Consulting Engineers
1710 Seamist Drive Houston, Texas 77008

ALMEDA SIMS
SLUDGE PROCESSING FACILITY IMPROVEMENTS

GFS NO R-0298-04-3
FILE NO: 4289-2

POLYMER DILUTION SYSTEM ELECTRICAL POWER PLAN

CITY OF HOUSTON
DEPARTMENT OF PUBLIC WORKS AND ENGINEERING
ENGINEERING, CONSTRUCTION AND REAL ESTATE GROUP

SECTION APPROVALS

WATER ENGINEERING	TRAFFIC AND SIGNAL ENGINEERING
WASTEWATER ENGINEERING 7/1/97	STREET & BRIDGE ENGINEERING
STORM SEWER ENGINEERING	CONSTRUCTION 7/3/97

OTHER DEPARTMENTS

PLANNING AND DEVELOPMENT	SPONSOR DEPARTMENT

CITY ENGINEER 7/7/97 DATE

DIRECTOR OF PUBLIC WORKS AND ENGINEERING 7-8-97 DATE

SEAL
LARRY M. BARFIELD 39337 REGISTERED PROFESSIONAL ENGINEER
6-25-97

CADD DWG FILE NO: 64300/E07.DWG

COHSTD.BDR

0 1 2 3 ORIGINAL SCALE IN INCHES FOR REDUCED PLANS

REV NO	DESCRIPTION	APP'D	DATE

SUBMITTED:
SCALE: 3/8" = 1"-0"
DATE: JUNE 1997
SURVEY BY:
F B NO:

DESIGNED BY: KKS
DRAWN BY: AAA
DWG NO: **E-07**
SHEET NO 50 OF 56 SHEETS
CITY DWG NO: 33007

FILE DATE--OPERATOR: 06/24/97-AAA

CONDUIT & CABLE SCHEDULE	
TAG	DESCRIPTION
1	1-3/4" C (CONTROL) 2-#14 & 1-#14 GND
2	1-3/4" C (CONTROL) 4-#14 & 1-#14 GND

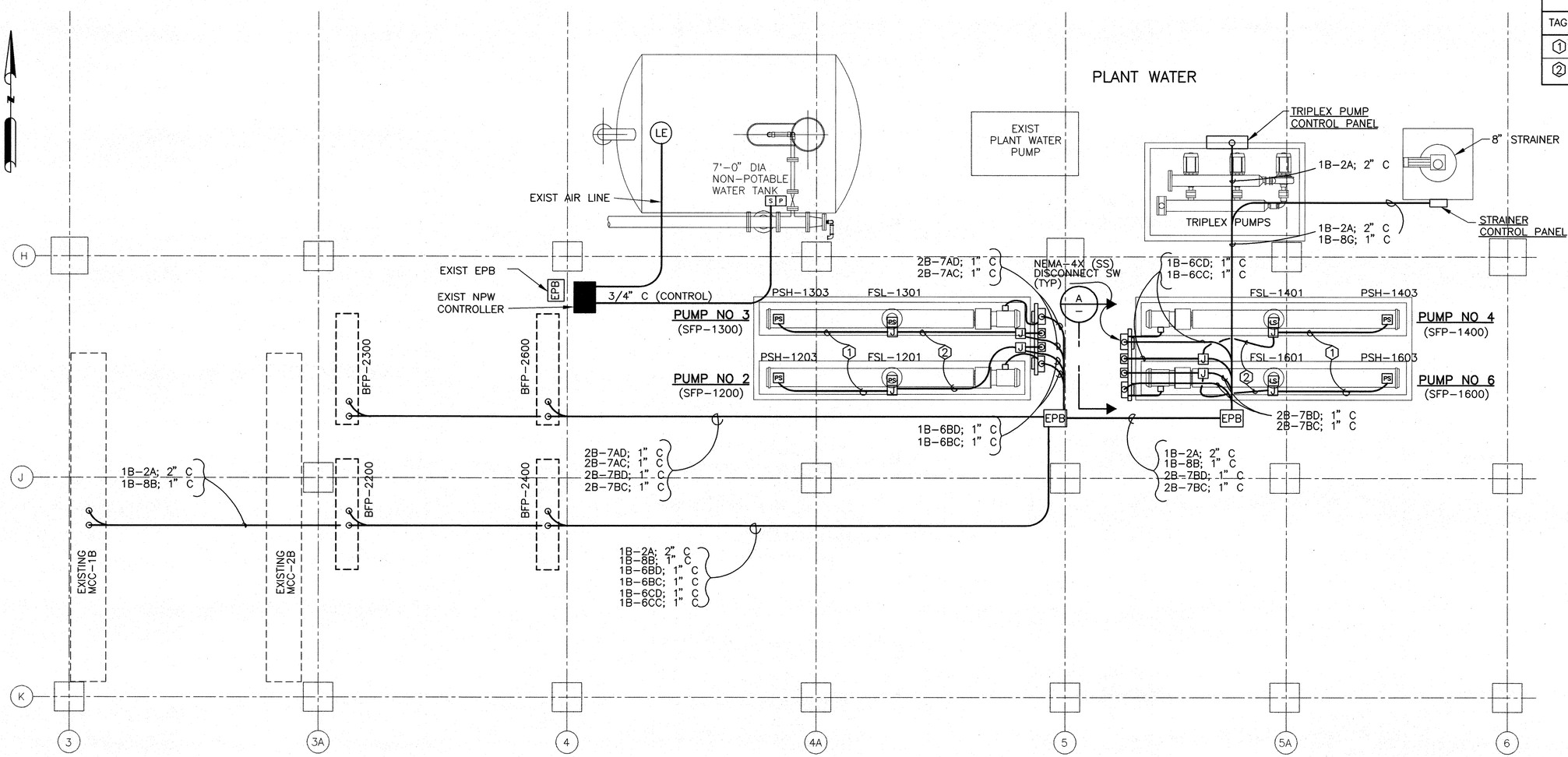

PLAN

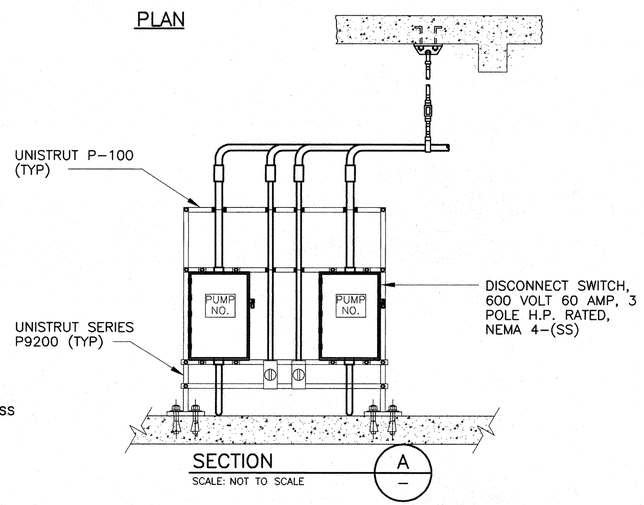

SECTION
SCALE: NOT TO SCALE
A

NOTE:
ALL SUPPORT MEMBERS AND ALL NUTS & BOLTS SHALL BE STAINLESS STEEL

SEAL
STATE OF TEXAS
LARRY M. BARFIELD
39337
REGISTERED PROFESSIONAL ENGINEER
6-25-97

CADD DWG FILE NO: 64300/E08.DWG

COHSTD.BDR

0 1 2 3 ORIGINAL SCALE IN INCHES FOR REDUCED PLANS

REV NO	DESCRIPTION	APP'D	DATE

CH2M HILL
7600 West Tidwell Road, Suite 400
Houston Tx 77040
713.462.0161

Binkley & Barfield, Inc.
Consulting Engineers
1710 Seamist Drive Houston, Texas 77008

ALMEDA SIMS
SLUDGE PROCESSING FACILITY IMPROVEMENTS

GFS NO R-0298-04-3
FILE NO: 4289-2

ELECTRICAL PLAN
PLANT WATER
AND SLUDGE FEED PUMP

CITY OF HOUSTON
DEPARTMENT OF PUBLIC WORKS AND ENGINEERING
ENGINEERING, CONSTRUCTION AND REAL ESTATE GROUP

SECTION APPROVALS

WATER ENGINEERING	TRAFFIC AND SIGNAL ENGINEERING
WASTEWATER ENGINEERING 7/1/97	STREET & BRIDGE ENGINEERING
STORM SEWER ENGINEERING	CONSTRUCTION 7/3/97

OTHER DEPARTMENTS

PLANNING AND DEVELOPMENT	SPONSOR DEPARTMENT

CITY ENGINEER 7/7/97 DATE

DIRECTOR OF PUBLIC WORKS AND ENGINEERING 7-8-97 DATE

SUBMITTED:
SCALE: 3/8" = 1'-0"
DATE: JUNE 1997
SURVEY BY:
F B NO:

DESIGNED BY: KKS
DRAWN BY: RPD
DWG NO: E-08
SHEET NO 51 OF 56 SHEETS
CITY DWG NO: 33007

FILE DATE--OPERATOR: 06/24/97-AAA

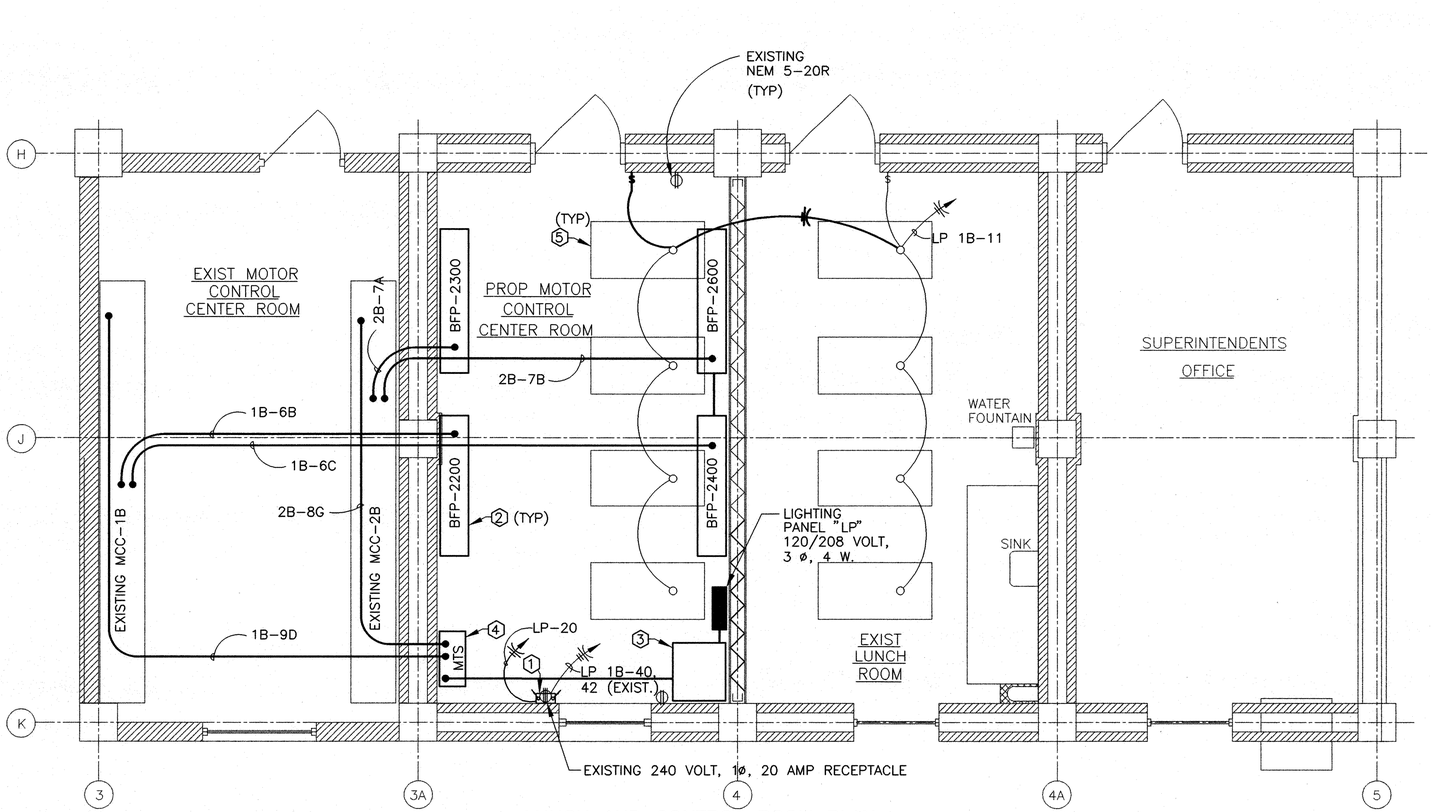

LUNCH AND CONTROL ROOM PLAN

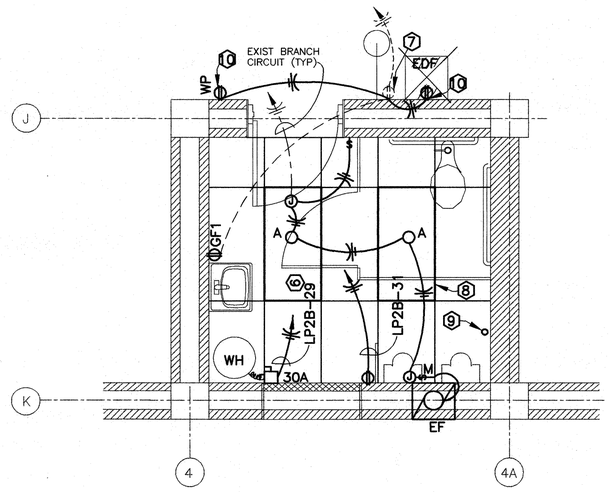

RESTROOM PLAN

LUNCH AND CONTROL ROOM PLAN AT ELEVATION 70.50

RESTROOM PLAN AT ELEVATION 54.50

NOTES:

1. EMERGENCY LIGHTING UNIT (MOUNTING HEIGHT 8'-0") DUAL-LITE CAT # AS-210-2 BIG BEAM 2M6N50-22 OR EQUAL
2. MAIN CONTROL PANEL FOR BELT FILTER PRESS -(BFP) FURNISHED BY SUPPLIER.
3. DRY-TYPE TRANSFORMER 30 KVA, 480 VOLT TO 120/208, VOLT, THREE PHASE, 4-WIRE.
4. 4 MANUAL TRANSFER SWITCH, 480 VOLT, 3 Ø, 70 AMP, CIRCUIT BREAKER TYPE.
5. EXISTING LIGHTING FIXTURES SHALL BE CLEANED AND RECIRCUIT TO SWITCH AS SHOWN (FROM LUNCH ROOM AND CONTROL ROOM). REPLACE EXISTING LAMPS AND LENSES WITH NEW. (TYPICAL FOR FOUR FIXTURES)
6. REMOVE EXISTING WATER HEATER BRANCH CIRCUIT BREAKER(2-POLE) AND INSTALL TWO NEW 20 AMP SINGLE POLE BREAKERS FOR THE NEW WATER HEATER AND THE WINDOW HEAT PUMP UNIT.
7. REMOVE EXISTING RECEPTACLE AND INSTALL BLANK PLATE.
8. RECESSED LIGHTING FIXTURE, TYPICAL FOR TWO, LITHONIA CAT # 2SPG-3-32WT8-A12 -120-ES WITH LAMPS COMPLETE.
9. REMOVE EXISTING ABANDONED 3/4" CONDUIT AND CONDUCTORS.
10. INSTALL NEW NEMA 5-20R DUPLEX RECEPTACLE.

CH2M HILL
7600 West Tidwell Road, Suite 400
Houston Tx 77040
713.462.0161

Binkley & Barfield, Inc.
Consulting Engineers
1710 Seamist Drive Houston, Texas 77008

ALMEDA SIMS
SLUDGE PROCESSING FACILITY IMPROVEMENTS

GFS NO R-0298-04-3
FILE NO: 4289-2

ELECTRICAL PLAN
MODIFICATION TO LUNCH ROOM, CONTROL ROOM, AND RESTROOM

CITY OF HOUSTON
DEPARTMENT OF PUBLIC WORKS AND ENGINEERING
ENGINEERING, CONSTRUCTION AND REAL ESTATE GROUP

SECTION APPROVALS

WATER ENGINEERING	TRAFFIC AND SIGNAL ENGINEERING
7/1/97	
WASTEWATER ENGINEERING	STREET & BRIDGE ENGINEERING
	7/2/97
STORM SEWER ENGINEERING	CONSTRUCTION

OTHER DEPARTMENTS

PLANNING AND DEVELOPMENT	SPONSOR DEPARTMENT

CITY ENGINEER — DATE 7/7/97

DIRECTOR OF PUBLIC WORKS AND ENGINEERING — DATE 7-8-97

SEAL

LARRY M. BARFIELD 39337 REGISTERED PROFESSIONAL ENGINEER

6-25-97

CADD DWG FILE NO: 64300/E09.DWG

COHSTD.BDR

0 1 2 3 ORIGINAL SCALE IN INCHES FOR REDUCED PLANS

REV NO	DESCRIPTION	APP'D	DATE

SUBMITTED:
SCALE: 3/8" = 1'-0"
DATE: JUNE 1997
SURVEY BY:
F B NO:

DESIGNED BY: KKS
DRAWN BY: RPD
DWG NO: **E-09**
SHEET NO 52 OF 56 SHEETS
CITY DWG NO: 33007

FILE DATE--OPERATOR-- 06/24/97--AAA

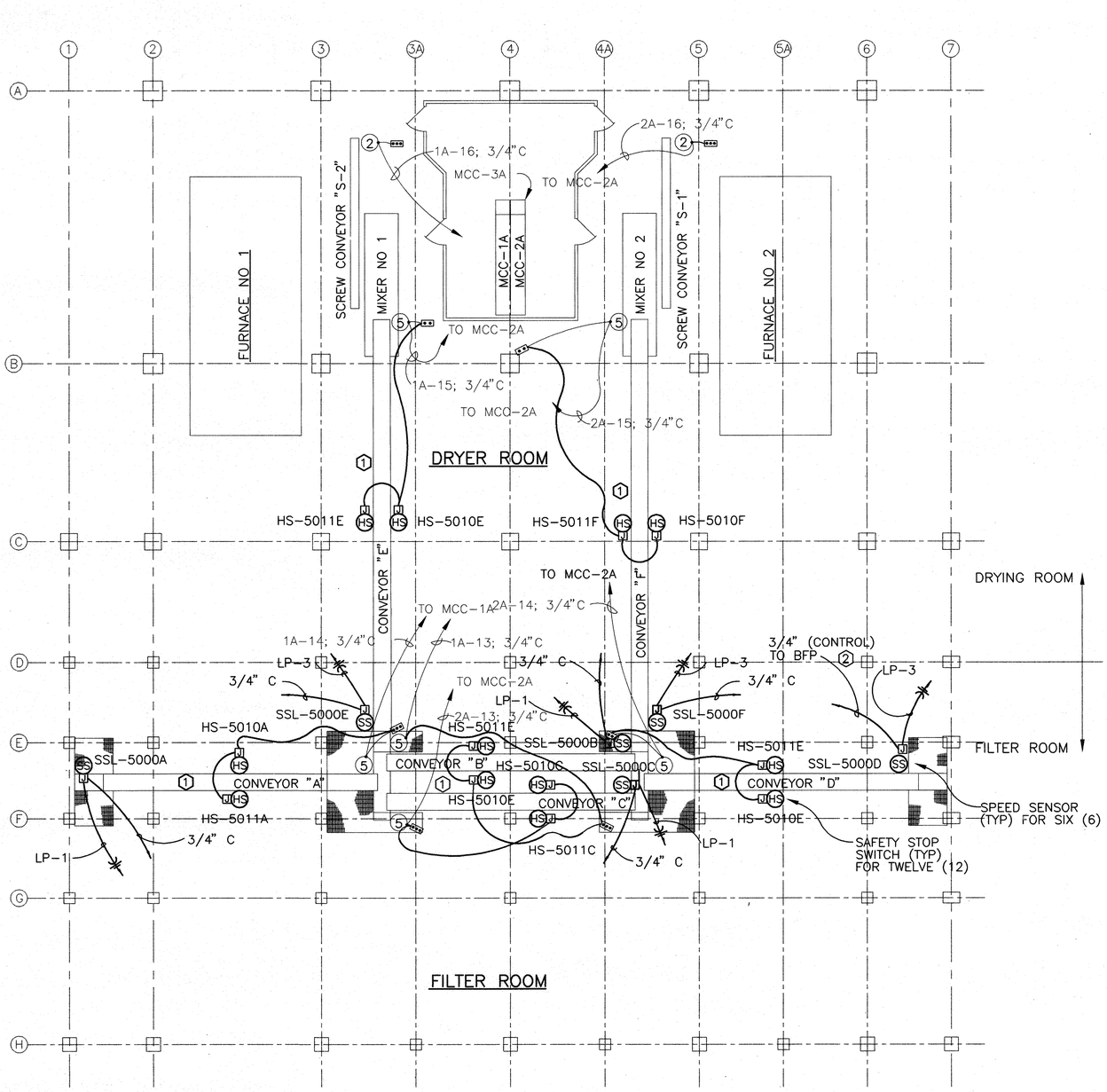

PLAN

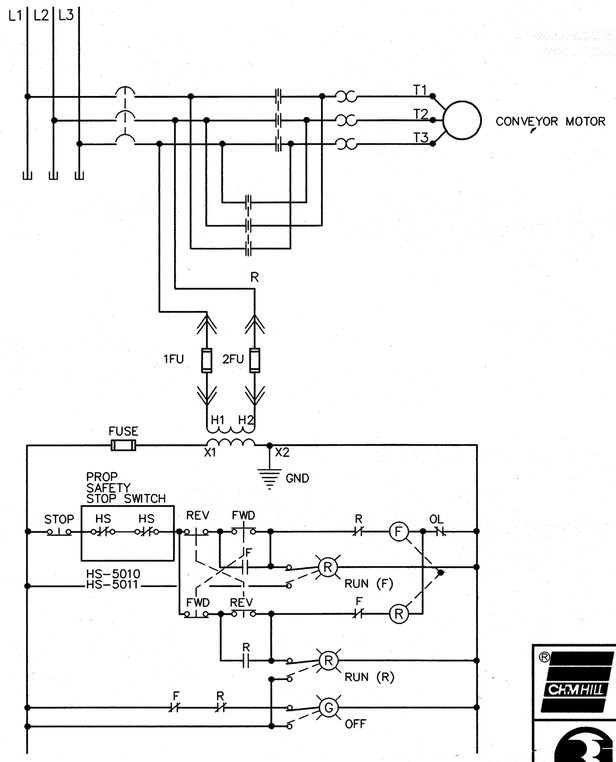

EXISTING CONVEYOR 'A' THRU 'D' CONTROL

(NOTE: CONVEYORS 'E' AND 'F' CONTROLS ALSO SHALL BE WIRED IN SERIES WITH THE SAFETY STOP SWITCH)

NOTES:

1. EXISTING CONVEYORS 'A' THRU 'F' SHALL BE MODIFIED TO PROVIDE SAFETY STOP PROTECTION, THROUGH THE PROPOSED SAFETY STOP SWITCH. (SEE CONTROL DIAGRAM).
2. 3/4" CONDUIT WITH CONTROL CABLE TO BELT FILTER PRESS MAIN CONTROL PANEL (MCP) TYPICAL FOR SIX (6). SEE PROCESS AND INSTRUMENTATION DRAWINGS.

CH2M HILL
7600 West Tidwell Road, Suite 400
Houston Tx 77040
713.462.0161

Binkley & Barfield, Inc.
Consulting Engineers
1710 Seamist Drive Houston, Texas 77008

ALMEDA SIMS
SLUDGE PROCESSING FACILITY IMPROVEMENTS

GFS NO R-0298-04-3
FILE NO: 4289-2

ELECTRICAL PLAN
CONVEYORS "A" THRU "F"

CITY OF HOUSTON
DEPARTMENT OF PUBLIC WORKS AND ENGINEERING
ENGINEERING, CONSTRUCTION AND REAL ESTATE GROUP

SECTION APPROVALS

WATER ENGINEERING	TRAFFIC AND SIGNAL ENGINEERING
WASTEWATER ENGINEERING 7/1/97	STREET & BRIDGE ENGINEERING
STORM SEWER ENGINEERING	CONSTRUCTION 7/3/97

OTHER DEPARTMENTS

PLANNING AND DEVELOPMENT	SPONSOR DEPARTMENT

CITY ENGINEER — DATE 7/7/97

DIRECTOR OF PUBLIC WORKS AND ENGINEERING — DATE 7-8-97

SEAL
STATE OF TEXAS
LARRY M. BARFIELD
39337
REGISTERED PROFESSIONAL ENGINEER
6-25-97

REV NO	DESCRIPTION	APP'D	DATE

SUBMITTED:
SCALE: 1/8" = 1'-0"
DATE: JUNE 1997
SURVEY BY:
F B NO:

DESIGNED BY: KKS
DRAWN BY: RPD
DWG NO: E-10
SHEET NO 53 OF 56 SHEETS
CITY DWG NO: 33007

CADD DWG FILE NO: 64300/E10.DWG
COHSTD.BDR
0 1 2 3
ORIGINAL SCALE IN INCHES FOR REDUCED PLANS

FILE DATE--OPERATOR: 06/24/97--AAA

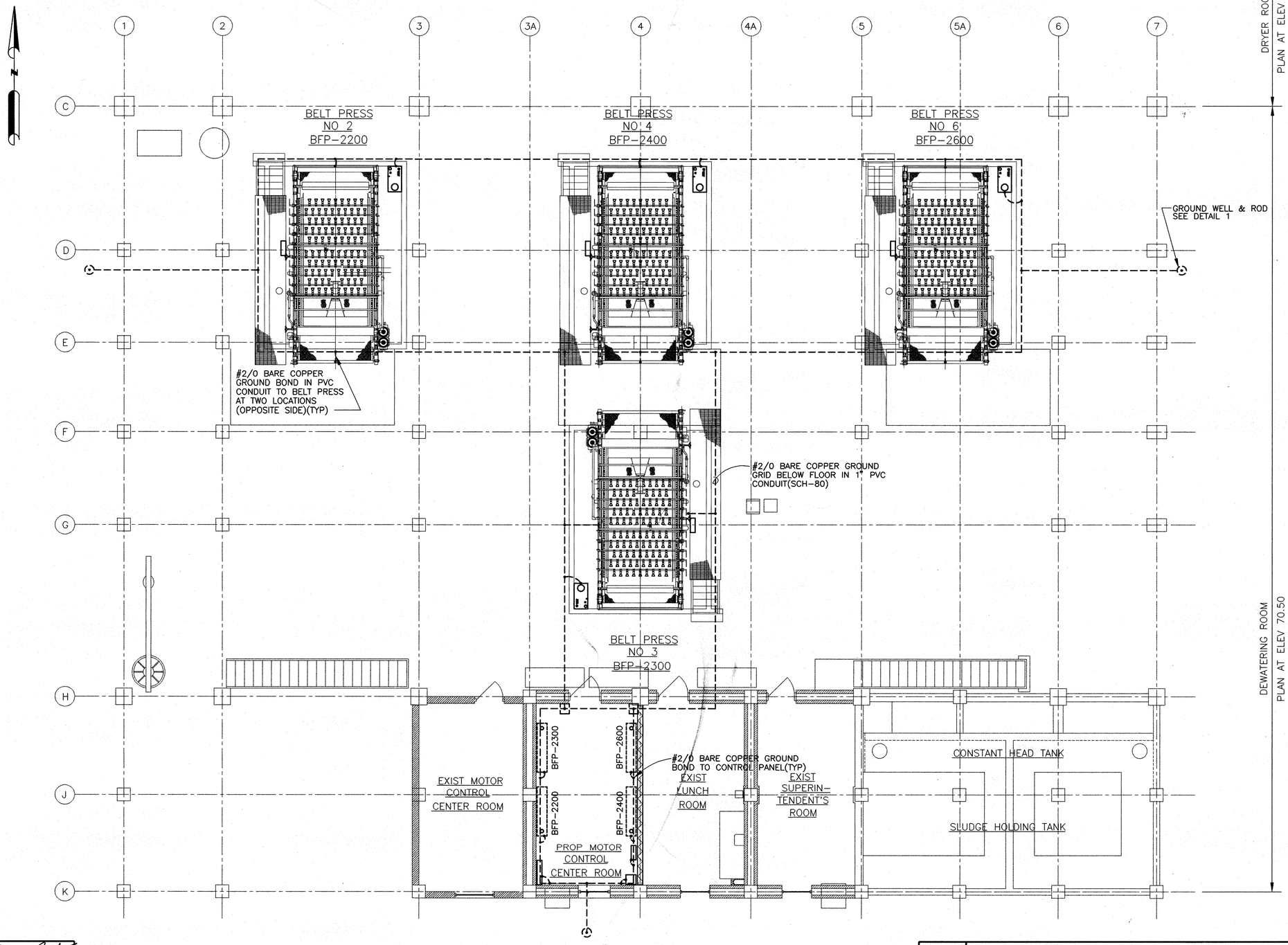

NOTES:

1. CONDUITS SHALL BE SUPPORTED BY STAINLESS STEEL HANGERS SUSPENDED FROM CEILING.
2. CONDUIT SUPPORT CLAMPS/CLIPS, AND FASTENERS SHALL BE STAINLESS STEEL-304. FURNISHED EQUIPMENT SHOP DRAWINGS.

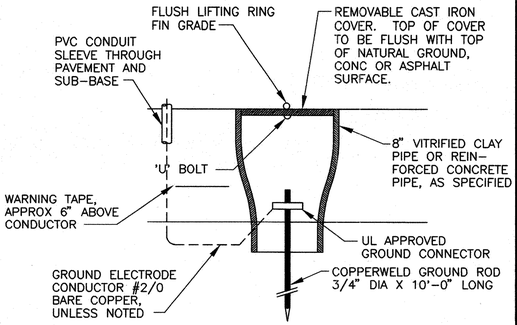

DETAIL 1 / –
SCALE: NO SCALE

CH2M HILL
7600 West Tidwell Road, Suite 400
Houston Tx 77040
713.462.0161

Binkley & Barfield, Inc.
Consulting Engineers
1710 Seamist Drive Houston, Texas 77008

ALMEDA SIMS SLUDGE PROCESSING FACILITY IMPROVEMENTS

GFS NO R-0298-04-3
FILE NO: 4289-2

DEWATERING FACILITY ELEVATION 70.50 ELECTRICAL GROUNDING PLAN

CITY OF HOUSTON
DEPARTMENT OF PUBLIC WORKS AND ENGINEERING
ENGINEERING, CONSTRUCTION AND REAL ESTATE GROUP

SECTION APPROVALS

WATER ENGINEERING 7/1/97	TRAFFIC AND SIGNAL ENGINEERING
WASTEWATER ENGINEERING	STREET & BRIDGE ENGINEERING
STORM SEWER ENGINEERING	CONSTRUCTION 7/3/97

OTHER DEPARTMENTS

PLANNING AND DEVELOPMENT	SPONSOR DEPARTMENT

CITY ENGINEER 7/7/97 DATE

DIRECTOR OF PUBLIC WORKS AND ENGINEERING 7-8-97 DATE

SEAL: LARRY M. BARFIELD 39337 REGISTERED PROFESSIONAL ENGINEER 6-25-97

REV NO	DESCRIPTION	APP'D	DATE

SUBMITTED:
SCALE: 3/16" = 1'-0"
DATE: JUNE 1997
SURVEY BY:
F B NO:

DESIGNED BY: KKS
DRAWN BY: AAA
DWG NO: E-11
SHEET NO 54 OF 56 SHEETS
CITY DWG NO: 33007

CADD DWG FILE NO: 64300/E11.DWG
COHSTD.BDR
0 1 2 3
ORIGINAL SCALE IN INCHES FOR REDUCED PLANS

FILE DATE--OPERATOR: 06/24/97--AAA

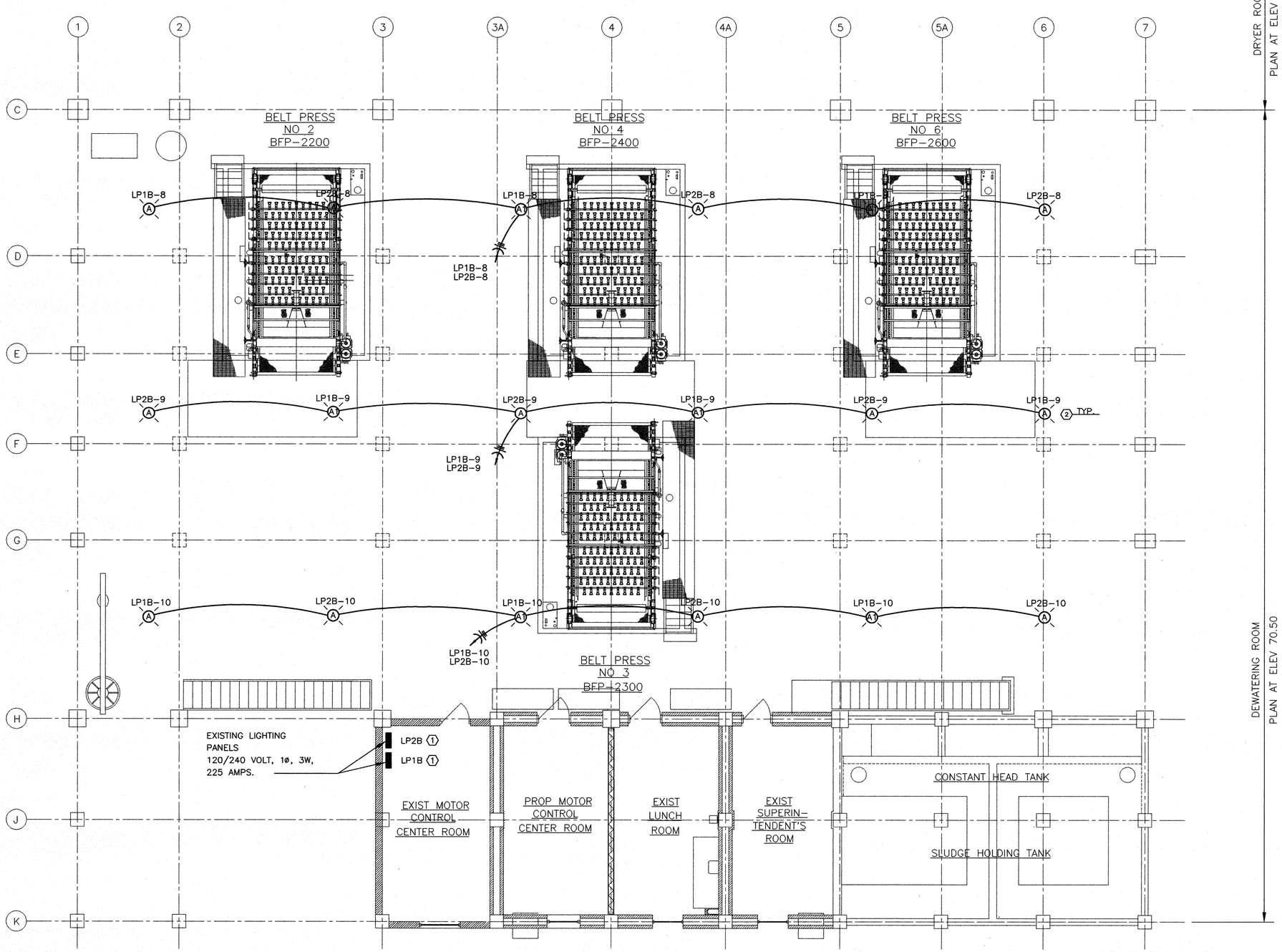

NOTE

(1) INSTALL 20 AMPS, SINGLE POLE NEW HID CIRCUIT BREAKERS FOR BRANCH CIRCUITS NO 8, 9, AND 10.

(2) INSTALL LIGHTING FIXTURES ON THOMPSON HANGERS COMPLETE WITH LOWERING/OPERATING LINE, SHEAVE HOUSING AND WHEELS ETC. COMPLETE. ATTACH FULLY (AL-7130) AND LOCK HOOK (AL-8135) ON WALL/COLUMN. THE BOTTOM OF FIXTURE SHALL BE IN LINE WITH THE BOTTOM OF TRUSS.

CH2M HILL
7600 West Tidwell Road, Suite 400
Houston Tx 77040
713.462.0161

Binkley & Barfield, Inc.
Consulting Engineers
1710 Seamist Drive Houston, Texas 77008

ALMEDA SIMS SLUDGE PROCESSING FACILITY IMPROVEMENTS

GFS NO R-0298-04-3
FILE NO: 4289-2

DEWATERING FACILITY ELEVATION 70.50 PROPOSED LIGHTING PLAN

CITY OF HOUSTON
DEPARTMENT OF PUBLIC WORKS AND ENGINEERING
ENGINEERING, CONSTRUCTION AND REAL ESTATE GROUP

SECTION APPROVALS

WATER ENGINEERING	TRAFFIC AND SIGNAL ENGINEERING
WASTEWATER ENGINEERING 7/1/97	STREET & BRIDGE ENGINEERING
STORM SEWER ENGINEERING	CONSTRUCTION 7/3/97

OTHER DEPARTMENTS

PLANNING AND DEVELOPMENT	SPONSOR DEPARTMENT

CITY ENGINEER — DATE 7/7/97

DIRECTOR OF PUBLIC WORKS AND ENGINEERING — DATE 7-8-97

SEAL:
STATE OF TEXAS
LARRY M. BARFIELD
39337
REGISTERED PROFESSIONAL ENGINEER
6-25-97

CADD DWG FILE NO: 64300/E12.DWG

COHSTD.BDR

0 1 2 3 ORIGINAL SCALE IN INCHES FOR REDUCED PLANS

REV NO	DESCRIPTION	APP'D	DATE

SUBMITTED:
SCALE: 3/16" = 1'-0"
DATE: JUNE 1997
SURVEY BY:
F B NO:

DESIGNED BY: KKS
DRAWN BY: AAA
DWG NO: E-12
SHEET NO 55 OF 56 SHEETS
CITY DWG NO: 35001

FILE DATE--OPERATOR: 06/24/97--AAA

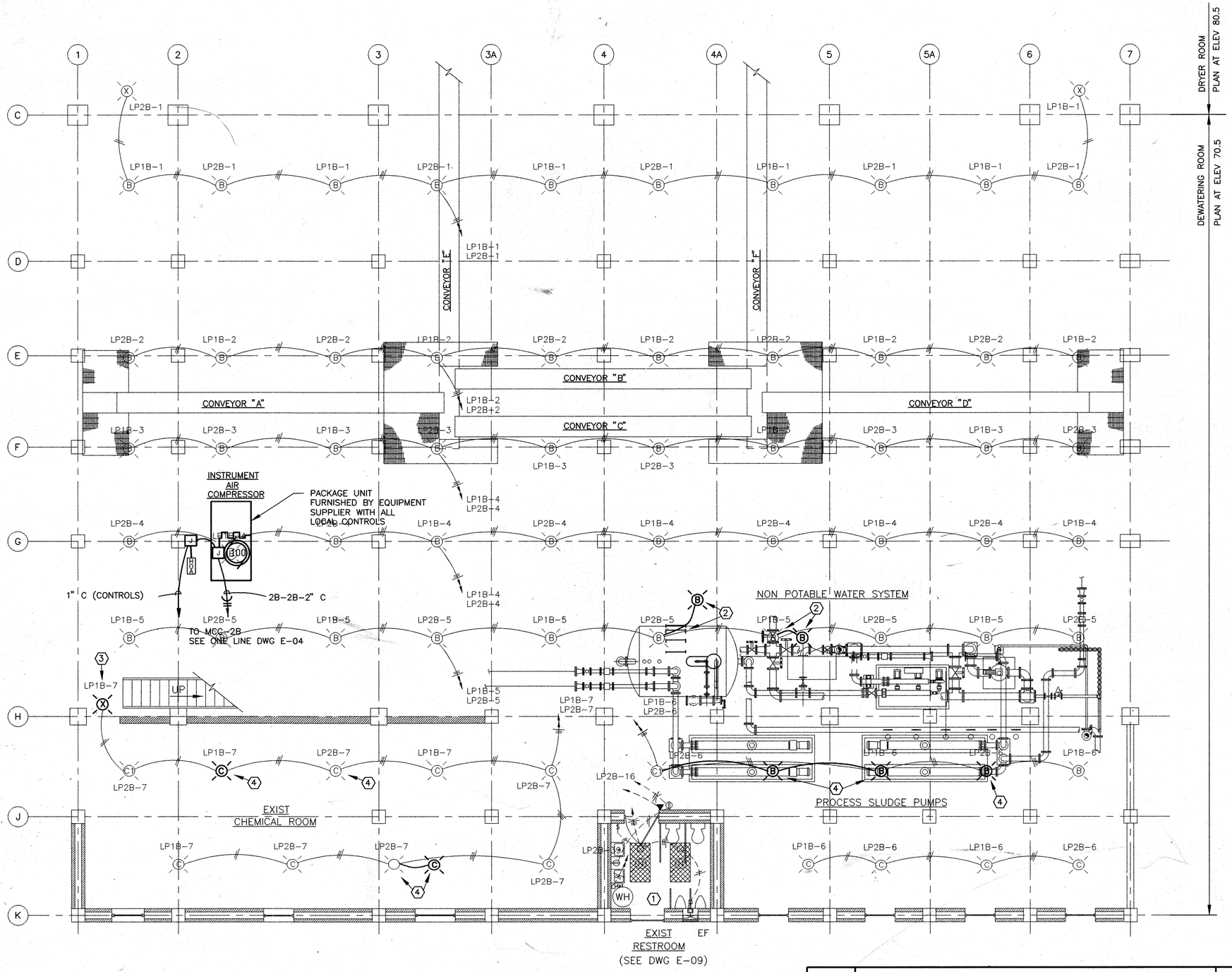

NOTES

1. ALL ELECTRICAL WIRING, SWITCHES, RECEPTACLES, AND LIGHTING FIXTURES SHALL BE REMOVED FROM THE EXISTING REST ROOM. SEE DWG NO. E-09 FOR NEW WIRING, DEVICES AND LIGHTING FIXTURES.
2. RELOCATE EXISTING HPS LIGHTING FIXTURE AS SHOWN . REPLACE LAMP WITH NEW COMPATIBLE LAMP
3. REPLACE EXISTING EXIT LIGHT WITH NEW LITHONIA CAT #LQM-S-W-1-RW-120-ELN COMPLETE WITH 90 MINUTE BATTERY PACK LED RED ON EMERGENCY AND STANDARD.
4. REMOVE EXISTING LIGHTING FIXTURE AND INSTALL NEW HUBBELL LIGHTING FIXTURE AS SHOWN. (SEE LIGHTING FIXTURE SCHEDULE)

(B) EXISTING LIGHTING FIXTURE

(B) EXISTING LIGHTING FIXTURE RELOCATED OR NEW. LETTER INDICATE TYPE (SEE DWG SCHEDULE)

(B) NEW LIGHTING FIXTURE

CH2M HILL
7600 West Tidwell Road, Suite 400
Houston Tx 77040
713.462.0161

Binkley & Barfield, Inc.
Consulting Engineers
1710 Seamist Drive Houston, Texas 77008

ALMEDA SIMS
SLUDGE PROCESSING FACILITY IMPROVEMENTS

GFS NO R-0298-04-3
FILE NO: 4289-1

DEWATERING FACILITY ELEVATION 54.50 LIGHTING MODIFICATIONS

CITY OF HOUSTON
DEPARTMENT OF PUBLIC WORKS AND ENGINEERING
ENGINEERING, CONSTRUCTION AND REAL ESTATE GROUP

SECTION APPROVALS

WATER ENGINEERING	TRAFFIC AND SIGNAL ENGINEERING
WASTEWATER ENGINEERING 7/1/97	STREET & BRIDGE ENGINEERING
STORM SEWER ENGINEERING	CONSTRUCTION 7/2/97

OTHER DEPARTMENTS

PLANNING AND DEVELOPMENT	SPONSOR DEPARTMENT

CITY ENGINEER — DATE 7/7/97

DIRECTOR OF PUBLIC WORKS AND ENGINEERING — DATE 7-8-97

SEAL: STATE OF TEXAS — LARRY M. BARFIELD — 39337 — REGISTERED PROFESSIONAL ENGINEER — 6-25-97

REV NO	DESCRIPTION	APP'D	DATE

SUBMITTED: XX
SCALE: 3/16" = 1'-0"
DATE: JUNE 1997
SURVEY BY: NONE
F B NO:

DESIGNED BY: KKS
DRAWN BY: AAA
DWG NO: **E-13**
SHEET NO 56 OF 56 SHEETS

CITY DWG NO: 33007

CADD DWG FILE NO: 64300/E13.DWG

COHSTD.BDR

0 1 2 3 ORIGINAL SCALE IN INCHES FOR REDUCED PLANS

FILE DATE--OPERATOR: 06/24/97--AAA

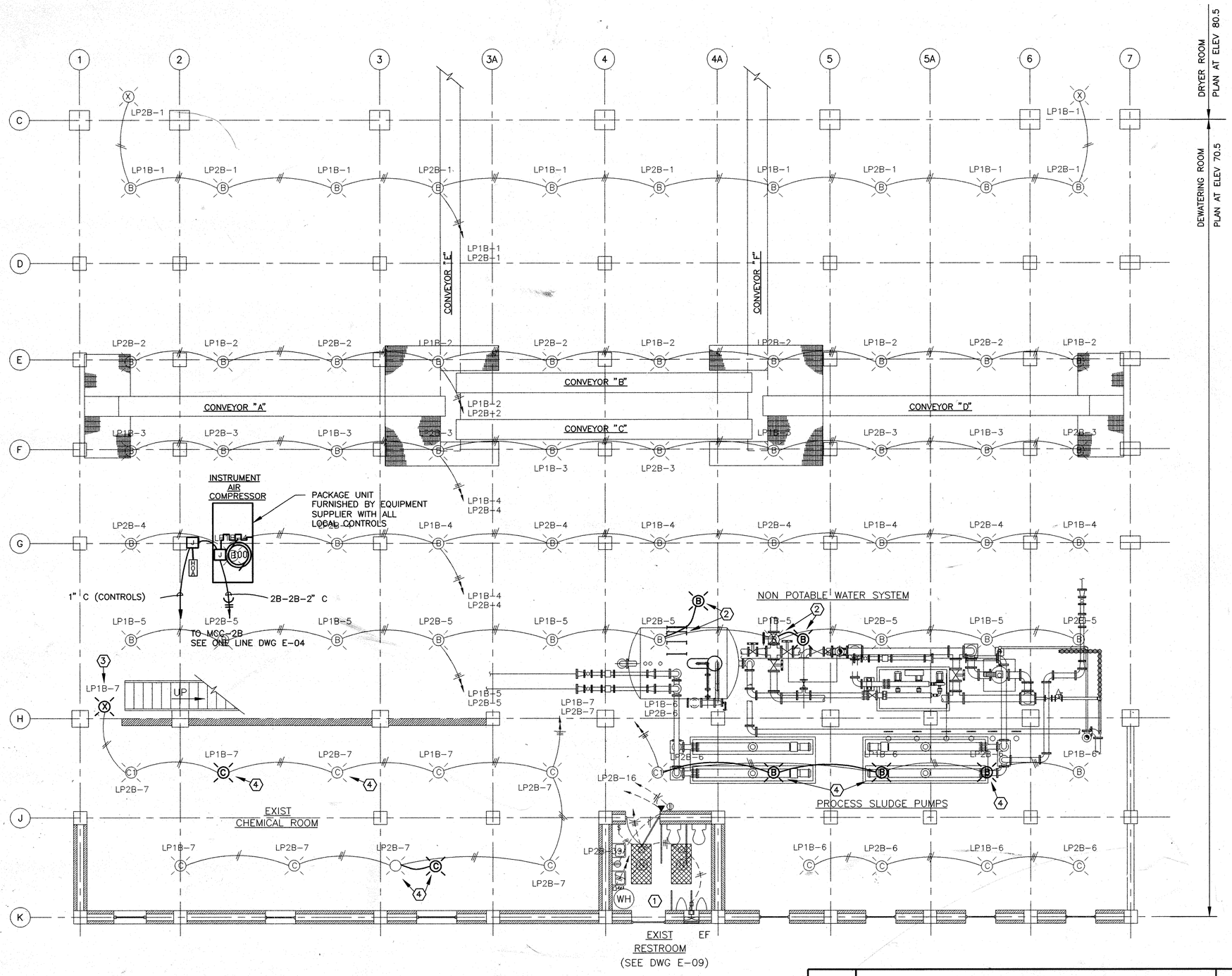

NOTES

1. ALL ELECTRICAL WIRING, SWITCHES, RECEPTACLES, AND LIGHTING FIXTURES SHALL BE REMOVED FROM THE EXISTING REST ROOM. SEE DWG NO. E-09 FOR NEW WIRING, DEVICES AND LIGHTING FIXTURES.
2. RELOCATE EXISTING HPS LIGHTING FIXTURE AS SHOWN . REPLACE LAMP WITH NEW COMPATIBLE LAMP
3. REPLACE EXISTING EXIT LIGHT WITH NEW LITHONIA CAT #LQM-S-W-1-RW-120-ELN COMPLETE WITH 90 MINUTE BATTERY PACK LED RED ON EMERGENCY AND STANDARD.
4. REMOVE EXISTING LIGHTING FIXTURE AND INSTALL NEW HUBBELL LIGHTING FIXTURE AS SHOWN. (SEE LIGHTING FIXTURE SCHEDULE)

(B) EXISTING LIGHTING FIXTURE

(B) EXISTING LIGHTING FIXTURE RELOCATED OR NEW. LETTER INDICATE TYPE (SEE DWG SCHEDULE)

(B) NEW LIGHTING FIXTURE

CH2M HILL
7600 West Tidwell Road, Suite 400
Houston Tx 77040
713.462.0161

Binkley & Barfield, Inc.
Consulting Engineers
1710 Seamist Drive Houston, Texas 77008

ALMEDA SIMS
SLUDGE PROCESSING FACILITY
IMPROVEMENTS

GFS NO R-0298-04-3
FILE NO: 4289-1

DEWATERING FACILITY
ELEVATION 54.50
LIGHTING MODIFICATIONS

CITY OF HOUSTON
DEPARTMENT OF PUBLIC WORKS AND ENGINEERING
ENGINEERING, CONSTRUCTION AND REAL ESTATE GROUP

SECTION APPROVALS

WATER ENGINEERING	TRAFFIC AND SIGNAL ENGINEERING
7/1/97	
WASTEWATER ENGINEERING	STREET & BRIDGE ENGINEERING
	7/2/97
STORM SEWER ENGINEERING	CONSTRUCTION

OTHER DEPARTMENTS

PLANNING AND DEVELOPMENT	SPONSOR DEPARTMENT

CITY ENGINEER	7/7/97 DATE
DIRECTOR OF PUBLIC WORKS AND ENGINEERING	7-8-97 DATE

SEAL:
STATE OF TEXAS
LARRY M. BARFIELD
39337
REGISTERED
PROFESSIONAL ENGINEER
6-25-97

CADD DWG FILE NO: 64300/E13.DWG

COHSTD.BDR

0 1 2 3 ORIGINAL SCALE IN INCHES FOR REDUCED PLANS

REV NO	DESCRIPTION	APP'D	DATE

SUBMITTED: XX
SCALE: 3/16" = 1'-0"
DATE: JUNE 1997
SURVEY BY: NONE
F B NO:

DESIGNED BY: KKS
DRAWN BY: AAA
DWG NO: E-13
SHEET NO 56 OF 56 SHEETS

CITY DWG NO:
33007

CITY OF HOUSTON
DEPARTMENT OF PUBLIC WORKS AND ENGINEERING
CAPITAL PROJECTS DIVISION
ALMEDA-SIMS BIOSOLIDS
DRYER REHABILITATION

GFS NO R-0298-05-3 FILE NO 4289-4

intellex CORPORATION
CONTROL SYSTEMS ENGINEERS
11230 WILCREST GREEN Houston, Texas 77042

RATNALA & BAHL, INC.
Engineers • Architects • Surveyors
11767 KATY FREEWAY, SUITE 510
HOUSTON, TEXAS 77079

CH2M HILL
7600 West Tidwell Road, Suite 400
Houston, Texas 77040-5719
713.462.0161

Binkley & Barfield, Inc.
Consulting Engineers
1710 Seamist Drive Houston, Texas 77008

DAVID J. ROSS 68267 REGISTERED PROFESSIONAL ENGINEER
STATE OF TEXAS
1/25/99

AS-BUILT
1/25/02

MAYOR
LEE P. BROWN

CONTROLLER
SYLVIA R. GARCIA

DISTRICT COUNCIL MEMBERS

BRUCE TATRO DISTRICT A	MICHAEL J. YARBROUGH DISTRICT B	MARTHA J. WONG DISTRICT C
JEW DON BONEY, JR. DISTRICT D	ROB TODD DISTRICT E	RAY F. DRISCOLL DISTRICT F
JEAN KELLEY DISTRICT G	FELIX FRAGA DISTRICT H	JOHN E. CASTILLO DISTRICT I

COUNCIL MEMBERS AT-LARGE

ANNISE D. PARKER POSITION 1	JOE ROACH POSITION 2
ORLANDO SANCHEZ POSITION 3	CHRIS BELL POSITION 4
CARROL G. ROBINSON POSITION 5	

APPROVED
CITY OF HOUSTON

Herbert Lum 3-2-99
CITY ENGINEER DATE
HERBERT LUM P.E.

3/5/99
DIRECTOR OF PUBLIC WORKS AND ENGINEERING DATE
JERRY KING, P.E.

CITY DWG. NO: 35001
SHEET NO 1 OF 159 SHEETS

F:/64305/64305A/G00.DWG

64305A/G01.DWG 03/19/99-DVB
FILE DATE—OPERATOR

SECTION	SHEET NO.	DRAWING NO.	TITLE
GENERAL	01	G-00	COVER SHEET
	02	G-01	DRAWING INDEX AND LOCATION MAP
	03	G-02	ABBREVIATIONS
	04	G-03	GENERAL CIVIL, STRUCTURAL & ARCHITECTURAL LEGEND
CIVIL	05	C-01	OVERALL SITE PLAN-WEST
	06	C-02	OVERALL SITE PLAN-EAST
	07	C-03	STANDARD CONSTRUCTION SIGN DETAIL
	08	C-04	PROPOSED PAVING AND DETAILS
PROCESS, INSTRUMENTATION & LOGIC	09	P1	P & I DIAGRAM SYMBOL LEGEND & ABBREVIATIONS
	10	P2	P & I DIAGRAM BIOSOLIDS DRYER NO. 1
	11	P3	P & I DIAGRAM BIOSOLIDS DRYER NO. 2
	12	P4	P & I DIAGRAM BIOSOLIDS DRYER NO. 1 COMBUSTION
	13	P5	P & I DIAGRAM BIOSOLIDS DRYER NO. 2 COMBUSTION
	14	P6	P & I DIAGRAM DRIED BIOSOLIDS CONVEYING
	15	P7	P & ID SLUDGE PUMPING IMPROVEMENTS BFP 2200 & 2300
	16	P8	P & ID SLUDGE PUMPING IMPROVEMENTS BFP 2400 & 2600
	17	I1	CONTROL SYSTEM PANEL BIOSOLIDS DRYERS PANEL CP-100A FACE LAYOUT
	18	I2	CONTROL SYSTEM PANEL SLUDGE DRYERS PANEL CP-100A FACE FABRICATION
	19	I3	CONTROL SYSTEM PANEL BIOSOLIDS DRYERS INPUT/OUTPUT ASSIGNMENTS
	20	I4	CONTROL SYSTEM PANEL BIOSOLIDS DRYERS POWER & COMMUNICATIONS WIRING
	21	I5	CONTROL SYSTEM PANEL BIOSOLIDS DRYERS PANEL CP-100A
	22	I6	CONTROL SYSTEM PANEL BIOSOLIDS DRYERS INPUT/OUTPUT WIRING
	23	I7	CONTROL SYSTEM PANEL BIOSOLIDS DRYERS INPUT/OUTPUT WIRING
	24	I8	CONTROL SYSTEM PANEL BIOSOLIDS DRYERS INPUT/OUTPUT WIRING
	25	I9	CONTROL SYSTEM PANEL BIOSOLIDS DRYERS INPUT/OUTPUT WIRING
	26	I10	CONTROL SYSTEM PANEL BIOSOLIDS DRYERS INPUT/OUTPUT WIRING
	27	I11	CONTROL SYSTEM PANEL BIOSOLIDS DRYERS INPUT/OUTPUT WIRING
	28	I12	CONTROL SYSTEM PANEL DRYER NO. 1 INSTRUMENTATION PANEL FACE LAYOUT
	29	I13	CONTROL SYSTEM PANEL DRYER NO. 1 INSTRUMENTATION PANEL FABRICATION
	30	I14	CONTROL SYSTEM PANEL DRYER NO. 2 INSTRUMENTATION PANEL FACE LAYOUT
	31	I15	CONTROL SYSTEM PANEL DRYER NO. 2 INSTRUMENTATION PANEL FABRICATION
	32	I16	CONTROL SYSTEM NETWORK DRYER CONTROL ROOM NETWORK LAYOUT
	33	I17	WIRING SCHEMATIC DIAGRAM PLC POWER AND COMMUNICATIONS DRYER BUILDING
	34	I18	WIRING DIAGRAM MOTOR CONTROL SCHEMATIC BIOSOLIDS DRYER BUILDING
	35	I19	WIRING DIAGRAM MOTOR CONTROL SCHEMATIC BIOSOLIDS DRYER BUILDING
	36	I20	WIRING SCHEMATIC DIAGRAM BIOSOLIDS DRYER NO. 1 FLAME SAFETY SYSTEM
	37	I21	WIRING SCHEMATIC DIAGRAM BIOSOLIDS DRYER NO. 1 FLAME SAFETY SYSTEM
	38	I22	WIRING SCHEMATIC DIAGRAM BIOSOLIDS DRYER NO. 2 FLAME SAFETY SYSTEM
	39	I23	WIRING SCHEMATIC DIAGRAM BIOSOLIDS DRYER NO. 2 FLAME SAFETY SYSTEM
	40	I24	WIRING SCHEMATIC DIAGRAM BIOSOLIDS DRYER COMBUSTION AIR CONTROL
	41	I25	CONTROL SYSTEM PANEL DRIED BIOSOLIDS CONVEYING PANEL CP-200 FACE LAYOUT
	42	I26	CONTROL SYSTEM PANEL DRIED BIOSOLIDS CONVEYING INPUT/OUTPUT ASSIGNMENTS
	43	I27	CONTROL SYSTEM PANEL DRIED BIOSOLIDS CONVEYING POWER & COMMUNICATIONS WIRING
	44	I28	CONTROL SYSTEM PANEL DRIED BIOSOLIDS CONVEYING PANEL CP-200
	45	I29	CONTROL SYSTEM PANEL DRIED BIOSOLIDS CONVEYING INPUT/OUTPUT WIRING
	46	I30	CONTROL SYSTEM PANEL DRIED BIOSOLIDS CONVEYING INPUT/OUTPUT WIRING
	47	I31	CONTROL SYSTEM PANEL DRIED BIOSOLIDS CONVEYING INPUT/OUTPUT WIRING
	48	I32	WIRING DIAGRAM MOTOR CONTROL SCHEMATIC BIOSOLIDS CONVEYING BUILDING
	49	I33	INSTRUMENT LOCATION PLAN CONTROL ROOM LAYOUT BIOSOLIDS DRYER BUILDING
	50	I34	INSTRUMENT LOCATION PLAN BIOSOLIDS DRYERS EQUIPMENT SOUTH VIEW
	51	I35	INSTRUMENT LOCATION PLAN BIOSOLIDS DRYERS SIDE ELEVATION VIEW
	52	I36	INSTRUMENT LOCATION PLAN BIOSOLIDS DRYERS EQUIPMENT TOP VIEW
	53	I37	INSTRUMENT LOCATION PLAN BIOSOLIDS CONVEYING & LOAD OUT SECTION VIEW
	54	I38	INSTRUMENT LOCATION PLAN BIOSOLIDS CONVEYING & LOAD OUT
	55	I39	INSTRUMENT LOCATION PLAN BIOSOLIDS CONVEYING & LOAD OUT SECTION VIEWS
	56	I40	INSTRUMENT CABLE SCHEDULE SHEET 1
	57	I41	INSTRUMENT CABLE SCHEDULE SHEET 2
	58	I42	INSTRUMENT CABLE SCHEDULE SHEET 3
	59	I43	INSTRUMENT CABLE SCHEDULE SHEET 4
	60	I44	INSTRUMENT CABLE SCHEDULE SHEET 5
	61	I45	INSTRUMENT AIR SCHEMATIC BIOSOLIDS LOADING BUILDING
	62	L0	CONTROL SYSTEM DRAWING SYMBOL LEGEND & ABBREVIATIONS
	63	L1	LOGIC DIAGRAM BIOSOLIDS DRYER NO. 1 SHEET 1
	64	L2	LOGIC DIAGRAM BIOSOLIDS DRYER NO. 1 SHEET 2
	65	L3	LOGIC DIAGRAM BIOSOLIDS DRYER NO. 1 SHEET 3
	66	L4	LOGIC DIAGRAM BIOSOLIDS DRYER NO. 1 SHEET 4
	67	L5	LOGIC DIAGRAM BIOSOLIDS DRYER NO. 1 SHEET 5
	68	L6	LOGIC DIAGRAM BIOSOLIDS DRYER NO. 2 SHEET 1
	69	L7	LOGIC DIAGRAM BIOSOLIDS DRYER NO. 2 SHEET 2
	70	L8	LOGIC DIAGRAM BIOSOLIDS DRYER NO. 2 SHEET 3
	71	L9	LOGIC DIAGRAM BIOSOLIDS DRYER NO. 2 SHEET 4
	72	L10	LOGIC DIAGRAM BIOSOLIDS DRYER NO. 2 SHEET 5
	73	L11	TIME SEQUENCE DIAGRAM BIOSOLIDS DRYER FLAME SAFETY SYSTEM
	74	L12	LOGIC DIAGRAM DRIED BIOSOLIDS CONVEYING SHEET 1
	75	L13	LOGIC DIAGRAM DRIED BIOSOLIDS CONVEYING SHEET 2
	76	L14	LOGIC DIAGRAM DRIED BIOSOLIDS CONVEYING SHEET 3
	77	L15	LOGIC DIAGRAM DRIED BIOSOLIDS CONVEYING SHEET 4
	78	L16	LOGIC DIAGRAM DRIED BIOSOLIDS CONVEYING SHEET 5
	79	L17	LOGIC DIAGRAM DRIED BIOSOLIDS CONVEYING SHEET 6
	80	L18	LOGIC DIAGRAM DRIED BIOSOLIDS CONVEYING SHEET 7
	81	L19	LOGIC DIAGRAM DRIED BIOSOLIDS CONVEYING SHEET 8
	82	L20	LOGIC DIAGRAM DRIED BIOSOLIDS CONVEYING SHEET 9
DEMOLITION	83	D-01	DEMOLITION SITE PLAN
	84	D-02	DEMOLITION OF LIME TANKS
	85	D-03	WORKING PLATFORMS AND CONVEYORS
	86	D-04	DEMOLITION OF LIME TANKS
	87	D-05	DEMOLITION OF AIR BLOWER FACILITIES
	88	D-06	DEMOLITION OF CONVEYORS
	89	D-07	DEMOLITION OF DRYER ROOM CONVEYORS
	90	D-08	DEMOLITION OF CONVEYORS IN LOADING BUILDING
	91	D-09	DEMOLITION OF CONVEYORS IN LOADING BUILDING SECTIONS
	92	D-10	DEMOLITION OF PNEUMATIC CONVEYANCE SYSTEMS
	93	D-11	DEMOLITION OF PNEUMATIC CONVEYANCE SYSTEMS
	94	D-12	DEMOLITION OF PNEUMATIC CONVEYANCE SYSTEMS
	95	D-13	DEMOLITION OF FUEL STORAGE TANKS
	96	D-14	DEMOLITION OF FUEL OIL UNLOADING AND STORAGE FACILITIES
		15-20	NOT USED
	97	D-21	SITE WORK & SECTIONS-DEMOLITION PLAN
	98	D-22	LOADING FACILITIES-ELEVATION-DEMOLITION PLAN
	99	D-23	LOADING FACILITIES-GROUND FLOOR PLAN-DEMOLITION PLAN
	100	D-24	LOADING FACILITIES-CONTROL FLOOR PLAN-DEMOLITION PLAN
	101	D-25	LOADING FACILITIES-ROOF FRAMING PLAN-DEMOLITION PLAN
	102	D-26	LOADING FACILITIES-SECTION AND DETAILS-DEMOLITION PLAN
	103	D-27	LOADING FACILITIES-SECTION-DEMOLITION PLAN
	104	D-28	LOADING FACILITIES-SECTIONS AND DETAILS-DEMOLITION PLAN
	105	D-29	LOADING FACILITIES-WALKWAY & STAIR DETAILS-DEMOLITION PLAN
	106	D-30	LOADING FACILITIES-PLATFORMS & MISC.-DEMOLITION PLAN
	107	D-31	STORAGE FACILITIES-EAST ELEVATION-DEMOLITION PLAN
	108	D-32	STORAGE FACILITIES-NORTH ELEVATION & PENTHOUSE PLAN & SECTIONS-DEMOLITION PLAN
	109	D-33	STORAGE FACILITIES-GROUND FLOOR PLAN-DEMOLITION PLAN
	110	D-34	STORAGE FACILITIES-ROOF PLAN-DEMOLITION PLAN
	111	D-35	STORAGE FACILITIES-SECTION-DEMOLITION PLAN
	112	D-36	STORAGE FACILITIES-MICELLANEOUS PIPING & STRUCT DETAILS-DEMOLITION PLAN
	113	D-37	MISCELLANEOUS STRUCTURAL SECTIONS & DETAILS
	114	D-38	LADDER AND PLATFORM DETAILS
MECHANICAL	115	M-01	MECHANICAL LEGEND
	116	M-02	PIPING PLAN FOR PUMPING IMPROVEMENTS
	117	M-03	PROCESS SLUDGE PUMPS PLANS AND SECTIONS
	118	M-04	PROCESS SLUDGE PUMPS SECTIONS AND DETAILS
	119	M-05	PROCESS SLUDGE PUMPS SECTIONS AND DETAILS
	120	M-06	PROCESS SLUDGE PUMPS SECTIONS AND DETAILS
	121	M-07	POLYMER DILUTION SYSTEM PLAN AND SECTIONS
	122	M-08	FURNACE No. 1 PLAN AND SECTIONS
	123	M-09	FURNACE No. 2 PLAN AND SECTIONS
	124	M-10	CYCLONE PLAN AND ELEVATIONS
	125	M-11	HYDRAULIC PASSENGER ELEVATOR 5000 LB. CAPACITY
	126	M-12	ELEVATOR SECTIONS
		13-20	NOT USED
	127	M-21	CONVEYOR LAYOUT
	128	M-22	MECHANICAL SECTIONS
	129	M-23	MECHANICAL DETAILS
STRUCTURAL	130	S-01	STANDARD REINFORCED CONCRETE DETAILS
	131	S-02	STANDARD PIPE SUPPORT DETAILS
	132	S-03	MISCELLANEOUS STANDARD DETAILS
	133	S-04	SODIUM HYPOCHLORITE TANKS REHABILITATION
	134	S-05	CONTAINMENT WALL AND PAVING SECTIONS AND DETAILS
	135	S-06	STORM SEWER TYPE "C", "C-1", "C-2", AND "C-2A" INLETS
	⚠ 135A	S-07	STANDARD STRUCTURAL DETAILS
		8-20	NOT USED
	136	S-21	FOUNDATION LOCATION PLAN
	137	S-22	FOUNDATION PLAN AND DETAILS
	138	S-23	STRUCTURAL STEEL LOCATION PLAN
	139	S-24	PLAN AT CONVEYOR BRIDGE
	140	S-25	LOAD BUILDING MODIFICATIONS TO PLATFORMS & SUPPORTS
	141	S-26	STRUCTURAL SECTIONS
	142	S-27	STRUCTURAL DETAILS
	143	S-28	STRUCTURAL GENERAL NOTES
ELECTRICAL	144	E-01	ELECTRICAL SYMBOLS LEGEND LIGHTING FIXTURE SCHEDULE AND ABBREVIATIONS
	145	E-02	ELECTRICAL POWER DISTRIBUTION ONE LINE DIAGRAM -KEY PLAN
	146	E-03	ELECTRICAL ONE LINE DIAGRAM MOTOR CONTROL CENTER IB
	147	E-04	ELECTRICAL ONE LINE DIAGRAM MOTOR CONTROL CENTER 2B
	148	E-05	ELECTRICAL RISER DIAGRAM AND MCC ELEVATIONS
	149	E-06	ELECTRICAL ONE LINE DIAGRAM SLUDGE VALVE ACTUATORS
	150	E-07	ELECTRICAL ONE LINE DIAGRAM POLYMER VALVE ACTUATORS
	151	E-08	ELECTRICAL PLAN SLUDGE FEED PUMP AND SLUDGE VALVE ACTUATORS
	152	E-09	ELECTRICAL PLAN CONTROL ROOM AND POLYMER PUMPS
		10-20	NOT USED
	153	E-21	STORAGE FACILITIES GROUND FLOOR ELECTRICAL DEMOLITION PLAN
	154	E-22	STORAGE FACILITIES ROOF ELECTRICAL DEMOLITION PLAN
	155	E-23	LOADING FACILITIES GROUND FLOOR ELECTRICAL DEMOLITION PLAN
	156	E-24	LOADING FACILITIES CONTROL ROOM AND ROOF ELECTRICAL DEMOLITION PLAN
	157	E-25	LOADING FACILITIES CONTROL ROOM-ELECTRICAL
	158	E-26	STORAGE FACILITIES ELECTRICAL LAYOUT
	159	E-27	NEW MOTOR CONTROL SCHEMATIC

CADD DWG FILE NO :F:/64305/

ORIGINAL SCALE IN INCHES FOR REDUCED PLANS
0 1 2 3

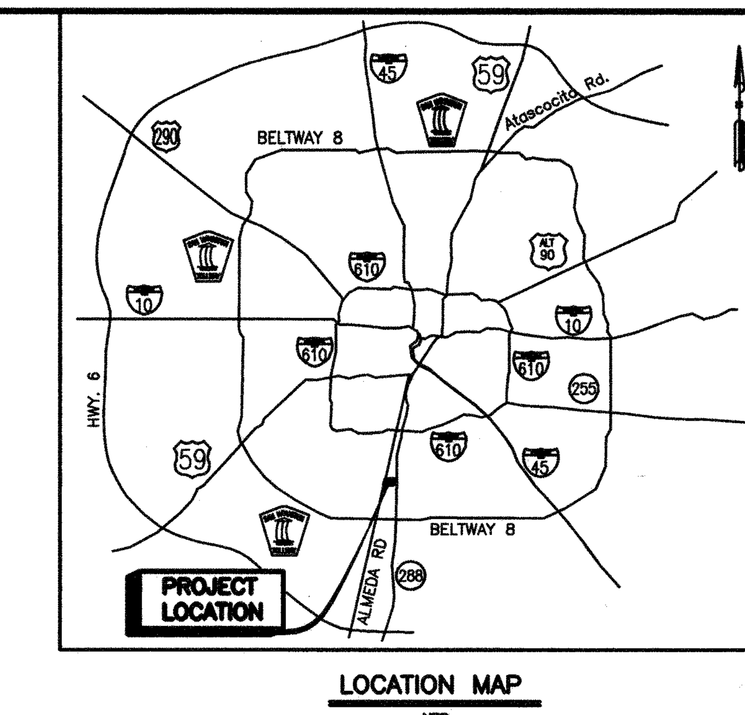

LOCATION MAP
NTS
(KEY MAP NO 572L)

PROJECT LOCATION
12319 1/2 ALMEDA RD, COUNCIL DISTRICT C

REV NO	DESCRIPTION	APP'D	DATE
⚠	ADDENDUM NO. 3 ADDED SHT NO 7	DJR	4-8-99

SEAL: STATE OF TEXAS — DAVID J. ROSS — 68267 — REGISTERED PROFESSIONAL ENGINEER

SEAL: AS-BUILT

CH2M HILL
7600 West Tidwell Road, Suite 400
Houston Tx 77040
713.462.0161

Binkley & Barfield, Inc.
Consulting Engineers
1710 Seamist Drive Houston, Texas 77008

ALMEDA SIMS
BIOSOLIDS
DRYER REHABILITATION

GFS NO: 0298-05-3
FILE NO: 4289-4

DRAWING INDEX AND LOCATION MAP

CITY OF HOUSTON
DEPARTMENT OF PUBLIC WORKS AND ENGINEERING
ENGINEERING, CONSTRUCTION AND REAL ESTATE GROUP

SECTION APPROVALS

WATER ENGINEERING — TRAFFIC AND SIGNAL ENGINEERING
WASTEWATER ENGINEERING 2-25-99 — STREET & BRIDGE ENGINEERING
STORMWATER ENGINEERING — CONSTRUCTION 3/2/99
2-25-99

OTHER DEPARTMENTS

PLANNING AND DEVELOPMENT — SPONSOR DEPARTMENT

CITY ENGINEER — DATE 3-2-99
DIRECTOR OF PUBLIC WORKS AND ENGINEERING — DATE 3/3/99

SUBMITTED:	DESIGNED BY: DJR
SCALE: NONE NONE	DRAWN BY: LTG
	DWG. NO. : G-01
DATE:	SHT NO 2 of 159 SHTS
SURVEY BY:	CITY DWG NO:
F B NO:	35001

ADDENDUM NO. 3

A	AMMETER, AMPERES	CT	CERAMIC TILE	GFI	GROUND FAULT INTERRUPTER	MGD	MILLION GALLONS PER DAY	RHR	RIGHT HAND REVERSE	TRANS	TRANSFORMER
AB	ANCHOR BOLT	CT	CURRENT TRANSFORMER	GFR	GROUND FAULT RELAY	MH	MANHOLE	RL	RAIN LEADER	TRANSV	TRANSVERSE
ABDN	ABANDON	CTR	CENTER	GL	GLASS	MIN	MINIMUM	RL	RAISE LOWER	TDR	TREAD
AC	ALTERNATING CURRENT	CTR'D	CENTERED	GPD	GALLONS PER DAY	MIR	MIRROR	RLS	RUBBER LINED STEEL	TS	TUBE STEEL
AC	ASPHALTIC CEMENT	CTSK	COUNTERSUNK	GPH	GALLONS PER HOUR	MISC	MISCELLANEOUS	RM	ROOM	TTD	TOILET TISSUE DISPENSER
ACI	AMERICAN CONCRETE INSTITUTE	CU	CUBIC	GPM	GALLONS PER MINUTE	MJ	MECHANICAL JOINT	ROL	RAISE-OFF-LOWER	TU-X	TREATMENT UNIT NO. X
ACST	ACOUSTICAL	CU FT	CUBIC FOOT	GRTG	GRATING	MLO	MAIN LUGS ONLY	RPM	REVOLUTIONS PER MINUTE	TURB	TURBIDITY
ACU	AIR CONDITIONING CONDENSING UNIT	CU IN	CUBIC INCH	GSP	GALVANIZED STEEL PIPE	MMP	MECHANICAL MOUNTING PANEL	RS	RIGID STEEL	TYP	TYPICAL
AD	AREA DRAIN	CU YD	CUBIC YARD	GV	GATE VALVE	M.O.	MASONRY OPENING	RST	REINFORCING STEEL	U ON	UNLESS OTHERWISE NOTED
ADD	ADDITIONAL	CUH	COPPER TUBING, HARD DRAWN	GVL	GRAVEL	MP	METAL PANEL	RTN	RETURN	UBC	UNIFORM BUILDING CODE
AFD	ADJUSTABLE FREQUENCY DRIVE	CV	CHECK VALVE	GWB	GYPSUM WALL BOARD	MPU	MULTIPURPOSE UNIT	RRUB	RADIAL RUBBER	UH	UNIT HEATER
AFF	ABOVE FINISHED FLOOR	CWR	CABINET DOOR MOUNTED	GYP	GYPSUM	MTD	MOUNTED	R/W	RIGHT OF WAY	UR	URINAL
AG	ACOUSTICAL GLASS		WASTE RECEPTACLE	H	HORN OR HOWLER	MTS	MANUAL TRANSFER SWITCH	S	I-BEAM	UVR	UNDER VOLTAGE RELAY
AGGR	AGGREGATE	D	DRAIN	HAS	HEADED ANCHOR STUD	MTS	MILL TYPE STEEL PIPE	S	SLOPE	V	VALVE
AHR	ANCHOR	D	PENNY NAIL SIZE	HB	HOSE BIB	MV	MERCURY VAPOR	S	SOUTH	V	VENT
AISC	AMERICAN INSTITUTE OF STEEL CONSTRUCTION	DAS	DATA ACQUISITION SYSTEM	HC	HOLLOW CORE	MWS	MAXIMUM WATER SURFACE	S	SWITCH	V	VOLT
		DBA	DEFORMED BAR ANCHOR	HD	HUB DRAIN	N	NORTH	SAN	SANITARY	V	VOLTMETER, VOLTS
AL (ALUM)	ALUMINUM	DBL	DOUBLE	HDR	HEADER	N/A	NOT APPLICABLE	SATC	SUSPENDED ACOUSTICAL TILE CEILING	VB	VAPOR BARRIER
ALKY	ALKALINITY	DC	DIRECT CURRENT	HDW	HARDWARE	N/C	NORMALLY CLOSED	SC	SHOWER CURTAIN	VC	VERTICAL CURVE
ALTN, (ALT)	ALTERNATE	DEG	DEGREE	HESR	HYPALON ELASTIC SHEET ROOFING	N/O	NORMALLY OPEN	SCBA	SELF CONTAINED BREATHING APPARATUS	VCP	VITRIFIED CLAY PIPE
AM	AUTO-MANUAL	DET	DETAIL	HGL	HYDRAULIC GRADE LINE	N, NEUT	NEUTRAL	SCC	SOLID CORE	VDR	VERTICAL DRYING RACK
ANDZ	ANODIZE	DF	DOUGLAS FIR	HGT	HEIGHT	NA	NON-AUTOMATIC	SCDOH	SOUTH CAROLINA DEPARTMENT OF HIGHWAYS	VERT	VERTICAL
APPROX	APPROXIMATE	DF	DRINKING FOUNTAIN	HH	HANDHOLE	ND	NAPKIN DISPOSAL	SCFM	STANDARD CUBIC FEED PER MINUTE	VIB	VIBRATION
APVD	APPROVED	DHEC	DEPT OF HEALTH AND ENVIRONMENTAL CONTROL	HID	HIGH INTENSITY DISCHARGE	NGS STA	NATIONAL GEODETIC SURVEY STATION	SCH	SCHEDULE	VP	VENEER PLASTER
ARCH	ARCHITECTURAL			HK	HOOK	NIC	NOT IN CONTRACT	SCPW	SUMMERVILLE COMMISSIONERS OF PUBLIC WORKS	VPC	POINT OF VERTICAL CURVATURE
AR	ANALOG RELAY	DDI	DROP INLET	HM	HOLLOW METAL	NO. #	NUMBER			VPI	POINT OF VERTICAL INTERSECTION
ARV	AIR RELEASE VALVE	DI	DUCTILE IRON	HOA	HAND-OFF-AUTO	NP	NON-PROTECTED	SCR	SHOWER CURTAIN ROD	VPS	VENEER PLASTER SYSTEM
ASTM	AMERICAN SOCIETY FOR TEST MATERIALS	DIA, O	DIAMETER	HOR	HAND-OFF-REMOTE	NPT	NATIONAL PIPE THREADS	SCU	SPEED CONTROL UNIT	VPT	POINT OF VERTICAL TANGENT
		DIAG	DIAGONAL	HORIZ	HORIZONTAL	NS	NON-SHRINK	SD	SOAP DISPENSER	VT	VINYL TILE
ASU	AIR SUPPLY UNIT	DIP	DUCTILE IRON PIPE	HP	HORSEPOWER	NTS	NOT TO SCALE	SDMH	STORM DRAIN MANHOLE	VTR	VENT THRU ROOF
ATS	AUTOMATIC TRANSFER SWITCH	DIR	DIRECTION	HP	HIGH PRESSURE	O TO O	OUT TO OUT	SDWK	SIDEWALK	W	WEST
AUTO	AUTOMATIC	DISCH	DISCHARGE	H.P.	HIGH POINT	OA	OVERALL	SEC	SECONDARY	W	WIDE FLANGE (BEAM)
AUX	AUXILIARY	DOL	DIRECT-ON-LINE	HPS	HIGH PRESSURE SODIUM	OC	ON CENTER	SECT	SECTION	W/	WITH
AVG	AVERAGE	DS	DOWNSPOUT	HR	HOSE RACK	OC	OPEN-CLOSE	SED	SEDIMENTATION	WC	WATER CLOSET
AVRV	AIR VACUUM RELEASE VALVE	DWG	DRAWING	HRDN	HARDENER	OCA	OPEN-CLOSE-AUTO	SEW	SEWAGE	WD	WOOD
@	AT	DWN	DOWN	HV	HOSE VALVE	OCR	OPEN-CLOSE-REMOTE	SF	SLOWER-FASTER	WG	WIRE GLASS
B	BELL	△	DELTA	HVAC	HEATING, VENTILATING AND AIR CONDITIONING	OD	OUTSIDE DIAMETER	SF	SQUARE FEET	WH	WATER HEATER
(B)	BRONZE TINT	E	EAST			OF	OUTSIDE FACE	SFP	SLUDGE FEED PUMP	WH	WATTHOUR METER
BAL	BALANCE	E	EMPTY	HW	HEADWALL	OL	OVERLOAD RELAY	SG	LAMINATED SAFETY GLASS	WHD	WATTHOUR DEMAND METER
BD	BUTTERFLY DAMPER	EA	EACH	HWL	HIGH WATER LEVEL	OO	ON-OFF	SGWB	SUSPENDED GYPSUM WALL BOARD	WP	WATERPROOF
BF	BLIND FLANGE	EE	EMERGENCY EYEWASH	IC	INTERRUPTING CAPACITY	OOA	ON-OFF-AUTO	SH	SHOWER	WP	WEATHERPROOF
BFV	BUTTERFLY VALVE	EF	EACH FACE	ID	INSIDE DIAMETER	OOR	ON-OFF-REMOTE	SH (SHT)	SHEET	WR	WASTE RECEPTACLE
BL	BASELINE	EF	EXHAUST FAN	IE	INVERT ELEVATION	OP	OPAQUE PANEL	SHA	SURFACE HARDENING AGENT	WS	WATER SURFACE
BFP	BACKFLOW PREVENTER	EL, ELEV	ELEVATION	IF	INSIDE FACE	OPER	OPERATOR	SHS	SOLIDS HANDLING SYSTEM	WS	WATERSTOP
BLDG	BUILDING	ELB	ELBOW	IG	INSULATING GLASS	OPNG	OPENING	SIM	SIMILAR	WS	WELDED STEEL
BLK	BLOCK	EIFS	EXTERIOR INSULATION FINISH SYSTEM	IN	INCH	OSC	OPEN-STOP-CLOSE	SMH	STORMWATER MANHOLE	WTP	WATER TREATMENT PLANT
BM	BEAM	ELC	ELECTRICAL LOAD CENTER	INCAND	INCANDESCENT	OSD	OPEN SITE DRAIN	SOLN	SOLUTION	WTR	WATER
BM	BENCHMARK	ELEC	ELECTRIC, ELECTRICAL	INJS	INJECTIONS	OZ	OUNCE	SP	SPACE OR SPACES	WU	WALL URN
BOT, (BOTT), B/	BOTTOM	ENGR	ENGINEER	INST	INSTANTANEOUS	P	PILASTER, PIPE	SPA.	SPACING	WWTP	WASTEWATER TREATMENT PLANT
BRG	BEARING	EOG	EDGE OF GUTTER	INSTM	INSTRUMENT, INSTRUMENTATION	PAV	PAVER TILE	SPEC, SPECS	SPECIFICATIONS	<	LESS THAN
BSP	BLACK STEEL PIPE	EOP	EDGE OF PAVEMENT	INSUL	INSULATION	PB	PUSHBUTTON SWITCH	SPEC'D.	SPECIFIED	>	GREATER THAN
BV	BALL VALVE	EP	EDGE OF PAVING	INVT	INVERT	PC	PHOTOCELL	SPLY	SUPPLY	≤	LESS THAN OR EQUAL
BVC	BEGINNING OF VERTICAL CIRCUIT	EP	EXPLOSION PROOF	IRRIG	IRRIGATION	PC	POINT OF CURVE	SQ	SQUARE	≥	GREATER THAN OR EQUAL
C	CONDUIT	EQ	EQUAL	ITG	INSULATED TEMPERED GLASS	PE	PLAIN END	SQ FT	SQUARE FOOT, FEET	=	EQUAL
?C	DEGREE CELSIUS	EQ SP	EQUALLY SPACED	IU	INTAKE UNIT	PED	PEDESTAL	SQ IN	SQUARE INCH		
C-C	CENTER TO CENTER	EQPT, (EQUIP)	EQUIPMENT	IW	IRRIGATION WELL	PEP	POLYETHYLENE PIPE	SR	SHORT RADIUS		
CAB	CABINET	ETM	ELAPSED TIME METER	J, JB	JUNCTION BOX	PH	HYDROGEN ION CONCENTRATION	SS	START-STOP		
CAR	CARPET	EVC	END OF VERTICAL CURVE	JAN	JANITOR	PI	POINT OF INTERSECTION	SS, SST	STAINLESS STEEL		
CB	CATCH BASIN	EW	EACH WAY	JCT	JUNCTION	PJF	PREMOULD JOINT FILLER	SSH	SAFETY SHOWER		
CB	CIRCUIT BREAKER	EXH	EXHAUST	JT	JOINT	PL	PLATE (STEEL)	SSK	SERVICE SINK		
CC	CONTROL CABLE	EXP	EXPANSION	K	KEY INTERLOCK	PL	PROPERTY LINE	STA	STATUS		
CCP	CENTRAL CONTROL PANEL	EXP	EXPOSED	KIP	THOUSAND POUNDS	PLAS	PLASTIC	STD	STANDARD		
CCS	CENTRAL CONTROL SYSTEM	EXP AB	EXPANSION ANCHOR BOLT	KIT	KITCHEN	PLC	PROGRAMMABLE LOGIC CONTROLLER	STIF	STIFFENER		
CFM	CUBIC FEET PER MINUTE	EXP JT	EXPANSION JOINT	KSK	KITCHEN SINK	PLC-X	PROGRAMMABLE LOGIC CONTROLLER NO. X	STIRR	STIRRUP		
CFS	CUBIC FEET PER SECOND	EXIST, (EXIST)	EXISTING	KV	KILOVOLTS			STL	STEEL		
CHAN, C	CHANNEL (BEAM)	EXT	EXTERIOR	KVA	KILOVOLT AMPERES	PLYWD	PLYWOOD	ST	STRAIGHT		
CHEM	CHEMICAL	°F	DEGREE FAHRENHEIT	KVAR	KILOVOLT AMPERES REACTIVE	PNL	PANEL	STRL	STRUCTURAL		
CI	CAST IRON	F, FU	FUSE	KW	KILOWATT	PP	POWER POLE	STRUCT	STRUCTURE		
CIP	CAST IRON PIPE	FAI	FRESH AIR INLET	L	ANGLE, LENGTH	PPL	POLYPROPYLENE LINED	SUSP	SUSPENDED		
CIPS	CAST IRON SOIL PIPE	FC	FLEXIBLE CONDUIT	LA	LIGHTNING ARRESTER	PRCST	PRECAST	SV	SOLENOID VALVE		
CJ	CONSTRUCTION JOINT	FCA	FLANGED COUPLING ADAPTER	LAB	LABORATORY	PREFAB	PREFABRICATION	SWR	SEWER		
CKT	CIRCUIT	FCL2	FREE CHLORINE RESIDUAL	LAM	LAMINATE	PRES	PRESSURE	SYMM	SYMMETRICAL		
℄	CENTERLINE	FCO	FLOOR CLEANOUT	LAT	LATITUDE	PRI	PRIMARY	T	THERMOSTAT		
CLDIP	CEMENT LINED DUCTILE IRON PIPE	FCTY	FACTORY	LAV	LAVATORY	PRM	PERMANENT REFERENCED MARKER	T	THICKNESS		
CLG	CEILING	FD	FLOOR DRAIN	LB	POUND	PROJ	PROJECTION	T&B	TOP AND BOTTOM		
CLO	CLOSET	FDN	FOUNDATION	LB/CU FT	POUNDS PER CUBIC FOOT	PROP	PROPERTY	T&G	TONGUE AND GROOVE		
CLR	CLEAR	FDR	FEEDER	LC	LIGHTING CONTACTOR	PS	POLYCARBONATE SHEET	T/	TOP OF		
CL2	CHLORINE	FEXT	FIRE EXTINGUISHER	LF	LINEAR FEET	PSF	POUNDS PER SQUARE FOOT	TAN	TANGENT		
CMP	CORRUGATED METAL PIPE	FF	FINISHED FLOOR	LG	LONG	PSI	POUNDS PER SQUARE INCH	TB	TERMINAL BOARD		
CMU	CONCRETE MASONRY UNIT	FG	FINISH GRADE	LH	LEFT HAND	PSIG	POUNDS PER SQUARE INCH, GAUGE	TB	TOWEL BAR		
CO	CLEANOUT	FHY	FIRE HYDRANT	LHR	LEFT HAND REVERSE	PT	POINT OF TANGENCY	TBG	TUBING		
COL	COLUMN	FIG	FIGURE	LLH	LONG LEG HORIZONTAL	PT	POTENTIAL TRANSFORMER	TC	TIME TO CLOSE		
CONC	CONCRETE	FL	FLOW LINE	LLV	LONG LEG VERTICAL	PT	PRESSURE TREATED	TCAE	TIME CLOSE AFTER ENERGIZATION		
CONDTN	CONDITIONED	FLG	FLANGE	LNTL	LINTEL	PTAC	PACKAGED TERMINAL AIR CONDITIONING	TCL2	TOTAL CHLORINE RESIDUAL		
CONN	CONNECTION	FL (FLR)	FLOOR	LONG	LONGITUDINAL	PTW	POTABLE WATER	TDH	TOTAL DYNAMIC HEAD		
CONT	CONTINUOUS, CONTINUATION	FLEX	FLEXIBLE	LOS	LOCK-OUT STOP PUSHBUTTON	PTD	PAPER TOWEL DISPENSER	TDR	TIME DELAY RELAY		
CONTR	CONTRACTOR	FLH	FLAT HEAD	LP	LIGHT POLE	PV	PLUG VALVE	TECH	TECHNICAL		
COORD	COORDINATE	FLTR	FILTER	L.P.	LOW POINT	PVC	POLYVINYL CHLORIDE	TEL	TELEPHONE		
COP	COPPER	FLUOR	FLUORESCENT	LR	LATCHING RELAY	PVI	POINT OF VERTICAL INTERSECTION	TEMP	TEMPORARY		
CP	CENTER PIVOT	FNSH	FINISH	LR	LOCAL-REMOTE	PVMT	PAVEMENT	TF	TOP FACE		
CP-X	CONTROL PANEL NO. X	FP	FIELD PANEL	LR	LONG RADIUS	PVT	POINT OF VERTICAL TANGENCY	TFG	TEMPERED FLOAT GLASS		
CPLG	COUPLING	FPS	FEET PER SECOND	LS	LABORATORY SINK	QT	QUARRY TILE	THD	THREAD		
CPRSR	COMPRESSOR	FP-W-X	FIELD PANEL NO. WX	LTG	LIGHTS OR LIGHTING	R (RAD)	RADIUS	THRU	THROUGH		
CPT	CONTROL POWER TRANFORMER	FR	FORWARD REVERSE	LWL	LOW WATER LEVEL	RC	REINFORCED CONCRETE	TJB	TERMINAL JUNCTION BOX		
CPVC	CHLORINATED PVC	FRP	FIBERGLASS REINFORCED PLASTIC	LYRS	LAYERS	RCP	REINFORCED CONCRETE PIPE	TL	TEFLON LINE PIPE		
CR	CONTROL RELAY	FSHS	FOLDING SHOWER SEAT	M&BH	MOP AND BROOM HOLDER	RCPT	RECEPTACLE	TO	TIME TO OPEN		
CRS	COLD ROLLED STEEL	FT	FOOT OR FEET	MA	MANUAL-AUTO	RD	ROAD	TOAD	TIME CLOSE AFTER DE-ENERGIZATION		
CRS	PVC COATED RIGID STEEL	FTG	FOOTING	MAS	MASONRY	RD	ROOF DRAIN	TOC	TOP OF CONCRETE		
CS	CUP SINK	FU	FIXTURE UNIT	MATL	MATERIAL	RDCR	REDUCER	TOG	TOP OF GRATING		
CSATC	CERAMIC SUSPENDED ACOUSTICAL TILE CEILING	FVNR	FULL VOLTAGE NON-REVERSING	MAX	MAXIMUM	RDW	REDWOOD	TOAE	TIME OPEN AFTER ENERGIZATION		
		FVR	FULL VOLTAGE REVERSING	MB	MACHINE BOLT	REF	REFER OR REFERENCE	TP	TURNING POINT		
		FWD	FORWARD	MC	MASONRY CLEARANCE	REF	REFRIGERATOR				
		G, GND	GROUND	MC	MODULATE-CLOSE	REFR	REFRIGERATE, REFRIGERANT				
		GA	GAUGE	MCC	MOTOR CONTROL CENTER	REINF	REINFORCED, REINFORCING, REINFORCE				
		GAL	GALLON	MECH	MECHANICAL	REQD	REQUIRED				
		GALV	GALVANIZED	MET	METAL	RG	REFLECTIVE				
		GB	GRAB BAR	MFD	MANUFACTURED	RH	RIGHT HAND				
		GC	GROOVED COUPLING	MFR	MANUFACTURER	RH	RODHOLE				

NOTES:

1. THIS IS A STANDARD LEGEND SHEET, THEREFORE, SOME ABBREVIATIONS MAY APPEAR ON THIS SHEET AND NOT ON THE DRAWINGS. CONTACT ENGINEER FOR ABBREVIATIONS NOT LISTED.
2. SEE MECHANICAL AND INSTRUMENTATION LEGENDS FOR FLOW STREAM IDENTIFICATIONS USED.

REV NO	DESCRIPTION	APP'D	DATE

SEAL

REGISTERED PROFESSIONAL ENGINEER — DAVID J. ROSS — 68267 — STATE OF TEXAS

SEAL

AS-BUILT 1/25/02

CH2M HILL
7600 West Tidwell Road, Suite 400
Houston Tx 77040
713.462.0161

Binkley & Barfield, Inc.
Consulting Engineers
1710 Seamist Drive Houston, Texas 77008

ALMEDA SIMS
BIOSOLIDS
DRYER REHABILITATION

GFS NO: 0298-05-3
FILE NO: 4289-4

ABBREVIATIONS

CITY OF HOUSTON
DEPARTMENT OF PUBLIC WORKS AND ENGINEERING
ENGINEERING, CONSTRUCTION AND REAL ESTATE GROUP

SECTION APPROVALS

WATER ENGINEERING

TRAFFIC AND SIGNAL ENGINEERING

WASTEWATER ENGINEERING — 2-25-99

STREET & BRIDGE ENGINEERING

STORMWATER ENGINEERING

CONSTRUCTION — 2/26/99

3/25/99

OTHER DEPARTMENTS

PLANNING AND DEVELOPMENT

SPONSOR DEPARTMENT

CITY ENGINEER — 3-2-99 DATE

DIRECTOR OF PUBLIC WORKS AND ENGINEERING — 3/5/99 DATE

SUBMITTED:	DESIGNED BY: DJR
SCALE: NONE NONE	DRAWN BY: AAA
DATE:	DWG. NO. : G-02
SURVEY BY:	SHT NO 3 of 159 SHTS
F B NO:	CITY DWG NO: 35001

64305A/G02.DWG
01/23/98-DVB/TG
FILE DATE-OPERATOR:

CADD DWG FILE NO.-F:/64305/

ORIGINAL SCALE IN INCHES FOR REDUCED PLANS
0 1 2 3

E:\64305_64305_G03.DW
FILE DATE--OPERATOR: 01/22/99--DJR/TE

GENERAL LEGEND

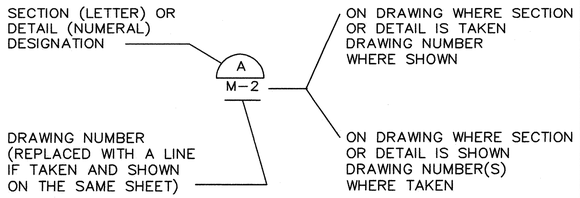

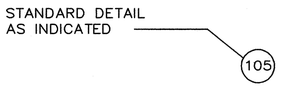

DETAIL AND SECTION DESIGNATION

1	99	SEE CIVIL AND YARD PIPING DRAWINGS
100	199	SEE ARCHITECTURAL DRAWINGS
200	299	SEE STRUCTURAL DRAWINGS
300	399	SEE MECHANICAL DRAWINGS
400	499	SEE ELECTRICAL DRAWINGS
500	599	SEE INSTRUMENTATION AND CONTROL DRAWINGS

STANDARD DETAIL DESIGNATION

GENERAL NOTES:

1. FACILITIES ARE SHOWN HEAVY LINED. SCREENING IS USED IN ORDER TO CLARIFY DRAWINGS. FOR EXAMPLE, STRUCTURES ARE SCREENED ON MECHANICAL DRAWINGS TO HIGH-LITE PIPING AND EQUIPMENT.
2. DEMOLITION WORK IS SHOWN BY SHOWING FACILITIES TO BE REMOVED CROSS HATCHED.
3. "FLOOR LINE" REFERS TO TOP OF CONCRETE SLABS. FINISH FLOORING IS INSTALLED ABOVE THE FLOOR LINE. FOR DEPRESSED FLOORS AND CURBS, SEE STRUCTURAL DRAWINGS.
4. REPETITIVE FEATURES ARE NOT DRAWN IN THEIR ENTIRETY AND SHALL BE COMPLETELY PROVIDED AS IF DRAWN IN FULL.
5. AT SOUND INSULATED WALLS, FULL HEIGHT PARTITIONS SHALL BE SEALED BOTH SIDES WITH ACOUSTIC SEALANT; TOP, BOTTOM, INTERSECTIONS, DOOR FRAMES, GLAZED OPENING FRAMES AND OTHER PENETRATIONS.
6. LINE OF EXISTING GRADES, AS SHOWN ON THE BUILDING ELEVATIONS AND SECTIONS ARE APPROXIMATE. THEY ARE AT THE BUILDING FACE, OR ON THE SECTION END EXCEPT AS NOTED.
7. VERIFY ALL ROUGH-IN DIMENSIONS FOR EQUIPMENT PROVIDED IN THIS CONTRACT, OR BY OTHERS.
8. REFER TO ARCHITECTURAL, STRUCTURAL, MECHANICAL, ELECTRICAL AND OTHER CATEGORIES OF DRAWINGS FOR ADDITIONAL NOTES.
9. VERIFY SIZE AND LOCATION OF, AND PROVIDE: ALL OPENINGS THROUGH FLOORS AND WALLS, ACCESS DOORS, FURRING, CURBS, ANCHORS AND INSERTS. PROVIDE ALL BASES, BLOCKING REQUIRED FOR ACCESSORIES, MECHANICAL, ELECTRICAL AND OTHER EQUIPMENT.

CADD DWG FILE NO.:F:/64305/

ORIGINAL SCALE IN INCHES FOR REDUCED PLANS

0 1 2 3

CIVIL LEGEND

SYMBOL	LEGEND
⊗ 200.0	PROPOSED SPOT ELEVATION
X 200.8	EXISTING SPOT ELEVATION
	MATCH LINE
R/W	RIGHT-OF-WAY
100	EXISTING CONTOUR (SHOWN SCREENED)
100	PROPOSED FOOT CONTOUR (SHOWN BOLD)
PL	PROPERTY LINE
	CENTERLINE
	TO BE REMOVED
	GRAVEL OR RIPRAP SURFACE
	DEDUCT ALTERNATES
X X	FENCE
	SILT FENCE
	DRAINAGE DIRECTIONAL ARROWS
B-1	PROPOSED TEST BORING LOCATION
TB1	EXISTING TEST BORING LOCATION
	SLOPE BREAK
	PIPE TO BE ABANDONED
N10000 E10000	CONSTRUCTION COORDINATE
4:1 (2%)	SLOPE DIRECTION AND MAGNITUDE
	COORDINATE GRID MARK
PP	POWER POLE
CB-1	CATCH BASIN
MH-1	MANHOLE
OE	OVERHEAD ELECTRICAL
UE	UNDERGROUND ELECTRICAL
EPB	ELECTRICAL PULL BOX
EMH	ELECTRICAL MANHOLE

NOTE:
SCREENED SYMBOLS INDICATE EXISTING.

ARCHITECTURAL LEGEND/STRUCTURAL LEGEND

SYMBOL	LEGEND
* DIRECTION SHOWN	INDICATES PAIR OF DOORS *INDICATES ACTIVE DOOR
1 / A-1	INTERIOR WALL ELEVATION
1	COLUMN GRID LINE NUMBER
L-1 / 0IA	TYPE LOUVER
W-1 / 0IA	WINDOW TAG
S-2A	TYPE SIGN
100	ROOM NUMBER
A	DOOR DESIGNATION
	CONCRETE OR PRECAST
	CMU (PLAN)
	CMU (SECTION)
	BATT INSULATION
	STEEL STUD WALL (PLAN)
	GYPSUM WALLBOARD
	PLYWOOD
	STEEL OR ALUM AS INDICATED
	WOOD, FINISHED
	WOOD, ROUGH CONTINUOUS
	WOOD, ROUGH NON-CONTINUOUS
	GROUND SURFACE
	COMPACTED GRANULAR FILL
	CONTROL JOINT
	EXPANSION JOINT
	GRATING SPAN
	GROUT
	DIRECTION SHOWN
	GUARDRAILS & HANDRAILS
WALL F. EXT "X"	FIRE EXTINGUISHER "X"=NO. IN SPECIFICATIONS
	CHECKERED PLATE
110.50 110.50 / 1	SPOT ELEVATION / WALL TYPE
W27x84 (24'-0")	STD. AISC ROLLED SHAPE OF W27x84 AT EL 24'-0"
W21x55 (1")	STD. AISC ROLLED SHAPE OF W21x55 WITH 1 IN. UPWARD CAMBER
W18x35 V=20K	STD. AISC ROLLED SHAPE OF W18x35 WITH 20 KIPS BEAM END SHEAR
W14x22-10	STD. AISC ROLLED SHAPE OF W14x22 WITH 10 HEADED SHEAR CONNECTORS EQUALLY SPACED

SYMBOL	LEGEND
W21x50-10/6/12 (BEAM BEAM)	STD. AISC ROLLED SHAPE OF W21X50 WITH 28 HEADED SHEAR CONNECTORS EQUALLY SPACED FROM L TO R AS 10 CONNECTORS 6 CONNECTORS/12 CONNECTORS
VB1	VERTICAL BRACE MARK
VCB1	VERTICAL CROSS BRACE MARK
VKB1	VERTICAL "K" BRACE MARK
45°00'00"	ANGLE IN DEGREES, MINUTES AND SECONDS
6"	SLAB DEPRESSION AND AMOUNT
1050'-0"	DATUM ELEVATION

L	STEEL ANGLE	@	AT
⅃L	STEEL ANGLES BACK TO BACK	&	AND
I	STD. AISC ROLLED W SHAPE	X	BY
C	STD. AISC ROLLED CHANNEL	℄	CENTER LINE
O	STD. AISC STEEL PIPE	ø	DIAMETER
□	STD. AISC STR TUBING	%	PERCENT
		PL	PLATE
		#	NUMBER (BAR SIZE)
		ф	SQUARE

REV NO	DESCRIPTION	APP'D	DATE

SEAL — STATE OF TEXAS — DAVID J. ROSS 68267 REGISTERED PROFESSIONAL ENGINEER — 1/19/99

SEAL — AS-BUILT — 1/25/02

CH2M HILL
7600 West Tidwell Road, Suite 400
Houston Tx 77040
713.462.0161

Binkley & Barfield, Inc.
Consulting Engineers
1710 Seamist Drive Houston, Texas 77008

ALMEDA SIMS
BIOSOLIDS
DRYER REHABILITATION

GFS NO: 0298-05-3
FILE NO: 4289-4

GENERAL CIVIL STRUCTURAL AND ARCHITECTURAL LEGEND

CITY OF HOUSTON
DEPARTMENT OF PUBLIC WORKS AND ENGINEERING
ENGINEERING, CONSTRUCTION AND REAL ESTATE GROUP

SECTION APPROVALS

WATER ENGINEERING	TRAFFIC AND SIGNAL ENGINEERING
WASTEWATER ENGINEERING — 2-25-99	STREET & BRIDGE ENGINEERING
STORMWATER ENGINEERING	CONSTRUCTION — 3/2/99
2/25/99	

OTHER DEPARTMENTS

PLANNING AND DEVELOPMENT	SPONSOR DEPARTMENT
CITY ENGINEER — 3-2-99	DATE
DIRECTOR OF PUBLIC WORKS AND ENGINEERING — 3/3/99	DATE

SUBMITTED:	DESIGNED BY: DJR
SCALE: NONE NONE	DRAWN BY: AAA
DATE:	DWG. NO. : G-03
SURVEY BY:	SHT NO 4 of 159 SHTS
F B NO:	CITY DWG NO: 35001

64305A/C01.DWG
02/18/99-DVB
FILE DATE--OPERATOR:

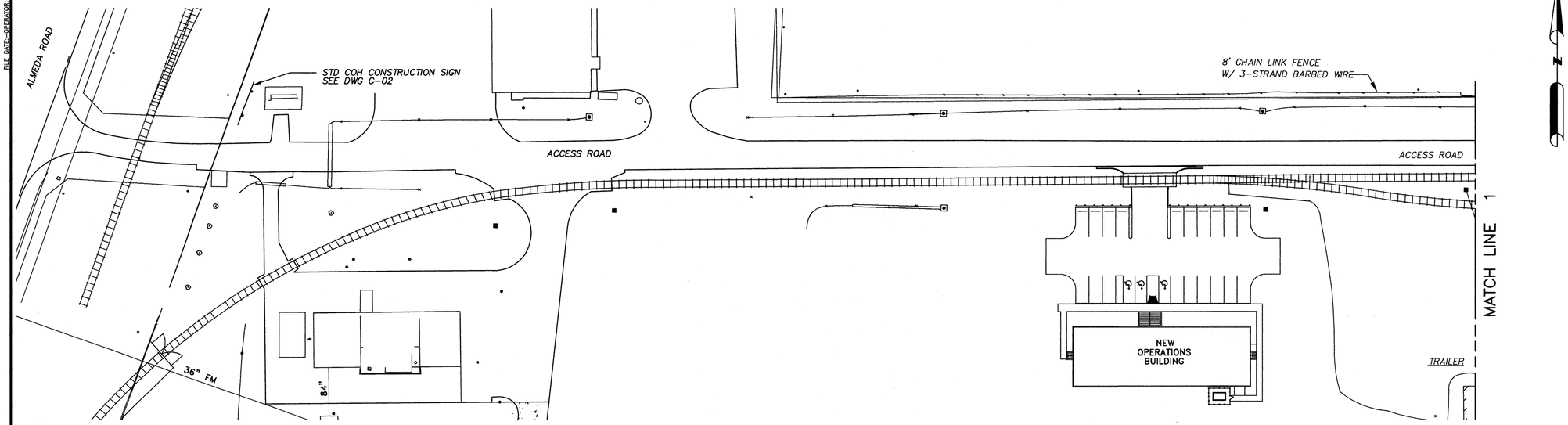

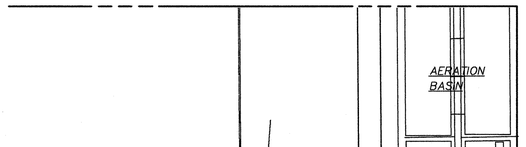

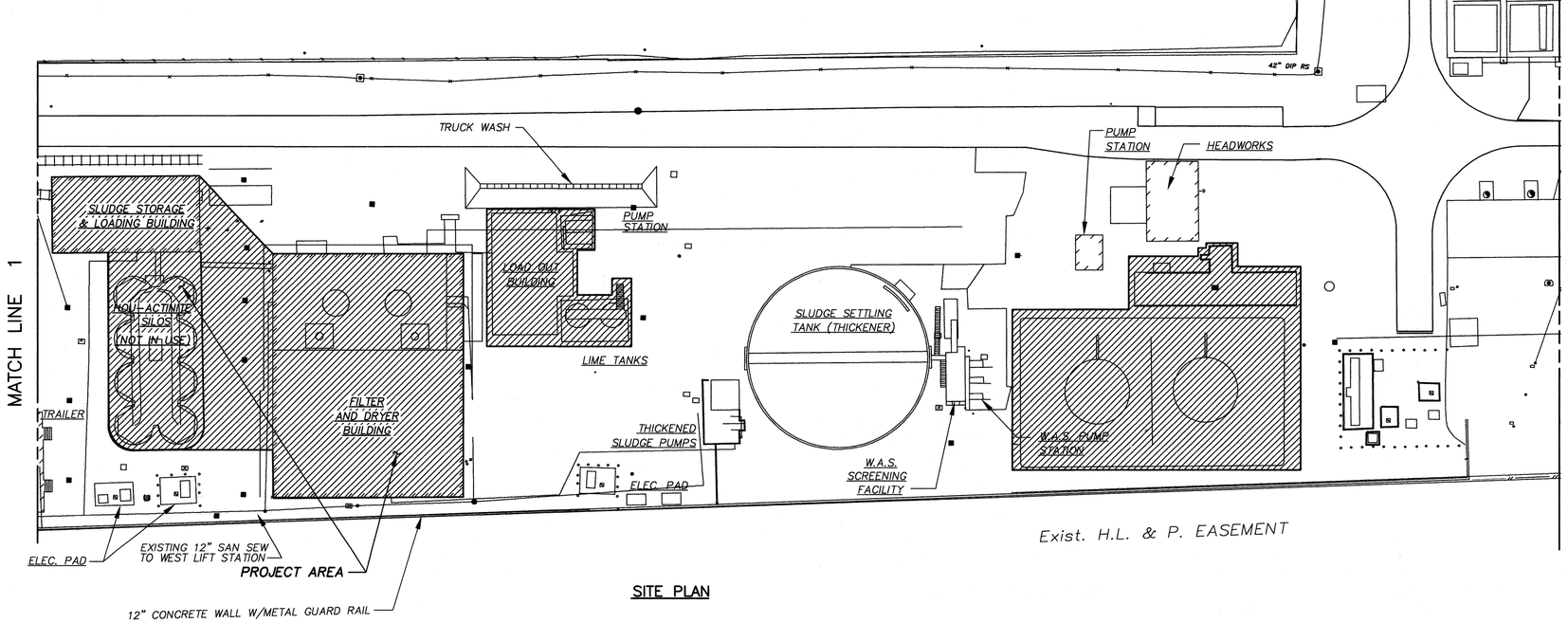

SITE PLAN

ORIGINAL SCALE IN INCHES
FOR REDUCED PLANS
0 1 2 3
CADD DWG FILE NO :F:/64305/

-WARNING NOTE-
OVERHEAD POWER LINES MAY EXIST ON THE PROPERTY WE HAVE NOT ATTEMPTED TO MARK ALL OF THOSE LINES SINCE THEY ARE CLEARLY VISIBLE, BUT THE CONTRACTOR SHALL LOCATE THEM PRIOR TO BEGINNING ANY CONSTRUCTION. TEXAS LAW, SECTION 752, HEALTH & SAFETY CODE, FORBIDS ALL ACTIVITIES IN WHICH PERSONS OR THINGS MAY COME WITHIN SIX (6) FEET OF LIVE OVERHEAD HIGH VOLTAGE LINES. CONTRACTORS ARE LEGALLY RESPONSIBLE FOR SAFETY OF CONSTRUCTION WORKERS UNDER THIS LAW. THIS LAW CARRIES BOTH CRIMINAL AND CIVIL LIABILITY. TO ARRANGE FOR LINES TO BE TURNED OFF OR MOVED AT CONTRACTOR'S EXPENSE CALL HL&P AT 228-7400.

NOTES:

1. ALL CONCRETE AREAS THAT ARE TO BE DEMOLISHED AND RECEIVE CONCRETE PAVEMENT SHALL BE SAW CUT AND DRILLED AT 12 INCHES ON CENTER TO RECEIVE A #16 BAR EPOXIED IN PLACE AND TIED TO BARS AS REQUIRED BY NOTE 2.
2. ELEVATIONS USED IN THIS CONTRACT ARE TAKEN FROM THE ORIGINAL PLANT DRAWINGS AND ARE USED ONLY FOR REFERENCE WITHIN THE PLANT. THE ACTUAL ELEVATIONS MAY VARY DUE TO SUBSIDENCE.

REV NO	DESCRIPTION	APP'D	DATE

SEAL

LICENSED TO PRACTICE IN TEXAS
DAVID J. ROSS
68267
REGISTERED PROFESSIONAL ENGINEER
2/19/99

SEAL

AS-BUILT
3/25/02

CH2M HILL
7600 West Tidwell Road, Suite 400
Houston Tx 77040
713.462.0161

Binkley & Barfield, Inc.
Consulting Engineers
1710 Seamist Drive Houston, Texas 77008

ALMEDA SIMS
BIOSOLIDS
DRYER REHABILITATION

GFS NO: 0298-05-3
FILE NO: 4289-4

OVERALL SITE PLAN

CITY OF HOUSTON

DEPARTMENT OF PUBLIC WORKS AND ENGINEERING
ENGINEERING, CONSTRUCTION AND REAL ESTATE GROUP

SECTION APPROVALS

WATER ENGINEERING

TRAFFIC AND SIGNAL ENGINEERING

Hamid Jamshidi 2-25-99
WASTEWATER ENGINEERING

STREET & BRIDGE ENGINEERING

STORMWATER ENGINEERING

Graham Reed 3/2/99
CONSTRUCTION

Zaid Kobeissi 2/25/99

OTHER DEPARTMENTS

PLANNING AND DEVELOPMENT

SPONSOR DEPARTMENT

CITY ENGINEER — 3-2-99 DATE

DIRECTOR OF PUBLIC WORKS AND ENGINEERING — 3/1/99 DATE

SUBMITTED:
SCALE: NONE
NONE
DATE:
SURVEY BY:
F B NO:

DESIGNED BY: DJR
DRAWN BY: AAA
DWG. NO. : C-01
SHT NO 5 of 159 SHTS

CITY DWG NO:
35001

FILE DATE--OPERATOR: 01/22/99-LTG
CADD DWG FILE NO :F:/64305/ 64305A/C02.DWG
ORIGINAL SCALE IN INCHES FOR REDUCED PLANS

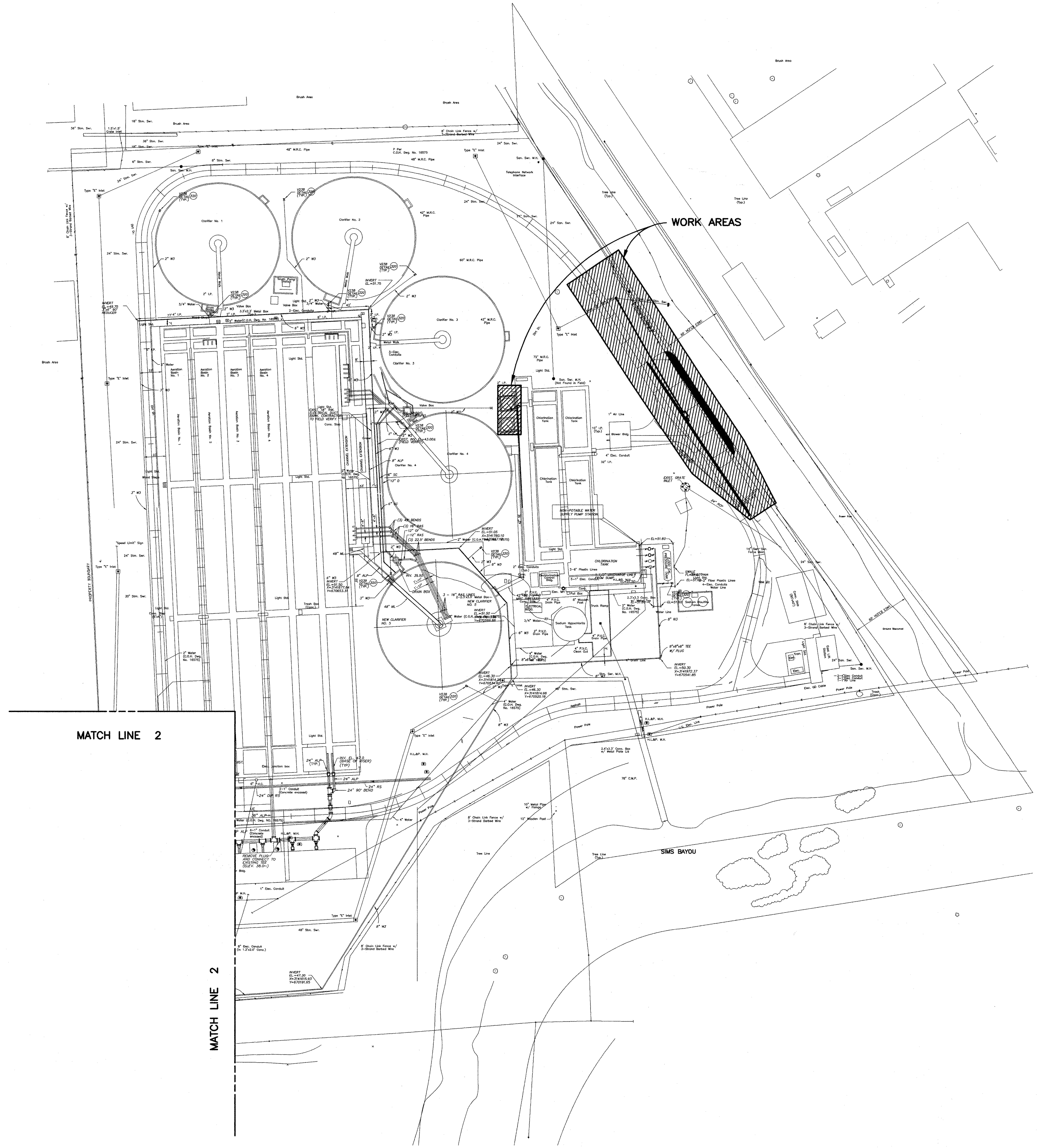

REV NO	DESCRIPTION	APP'D	DATE

SEAL: DAVID J. ROSS 68267 REGISTERED PROFESSIONAL ENGINEER — STATE OF TEXAS

SEAL: AS BUILT 1/25/02

CH2M HILL
7600 West Tidwell Road, Suite 400
Houston Tx 77040
713.462.0161

Binkley & Barfield, Inc.
Consulting Engineers
1710 Seamist Drive Houston, Texas 77008

ALMEDA SIMS
BIOSOLIDS
DRYER REHABILITATION

GFS NO: 0298-05-3
FILE NO: 4289-4

OVERALL SITE PLAN-EAST

CITY OF HOUSTON
DEPARTMENT OF PUBLIC WORKS AND ENGINEERING
ENGINEERING, CONSTRUCTION AND REAL ESTATE GROUP

SECTION APPROVALS

WATER ENGINEERING — TRAFFIC AND SIGNAL ENGINEERING
WASTEWATER ENGINEERING — STREET & BRIDGE ENGINEERING
STORMWATER ENGINEERING — CONSTRUCTION 3/2/99
2/25/99

OTHER DEPARTMENTS

PLANNING AND DEVELOPMENT — SPONSOR DEPARTMENT

CITY ENGINEER — DATE 3-2-99
DIRECTOR OF PUBLIC WORKS AND ENGINEERING — DATE 3/3/99

SUBMITTED:
SCALE: NONE
NONE
DATE:
SURVEY BY:
F B NO:

DESIGNED BY: DJR
DRAWN BY: AAA
DWG. NO. : C-02
SHT NO 6 of 159 SHTS
CITY DWG NO: 35001

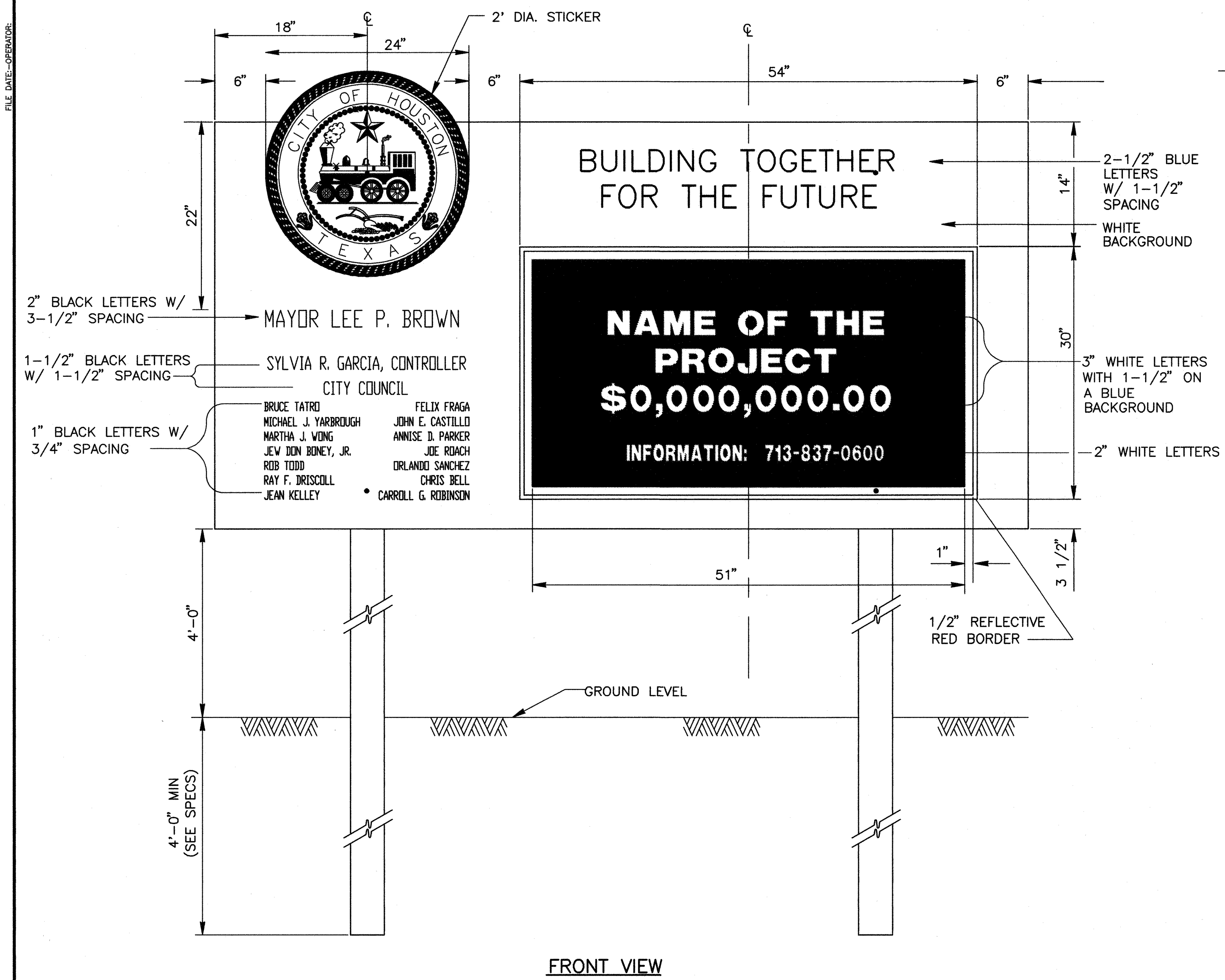

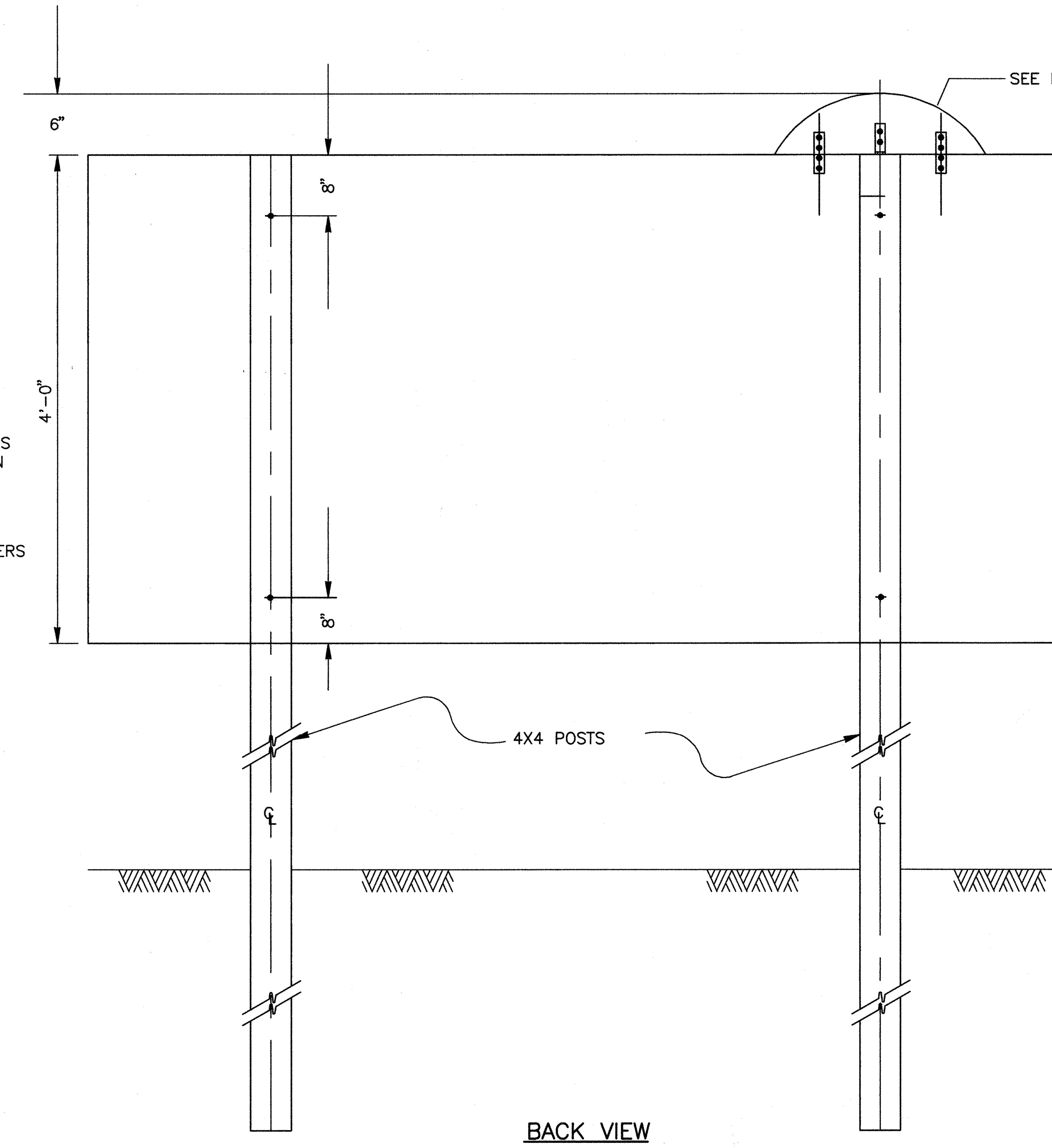

PROJECT SIGN
SCALE: NONE
A
0-2

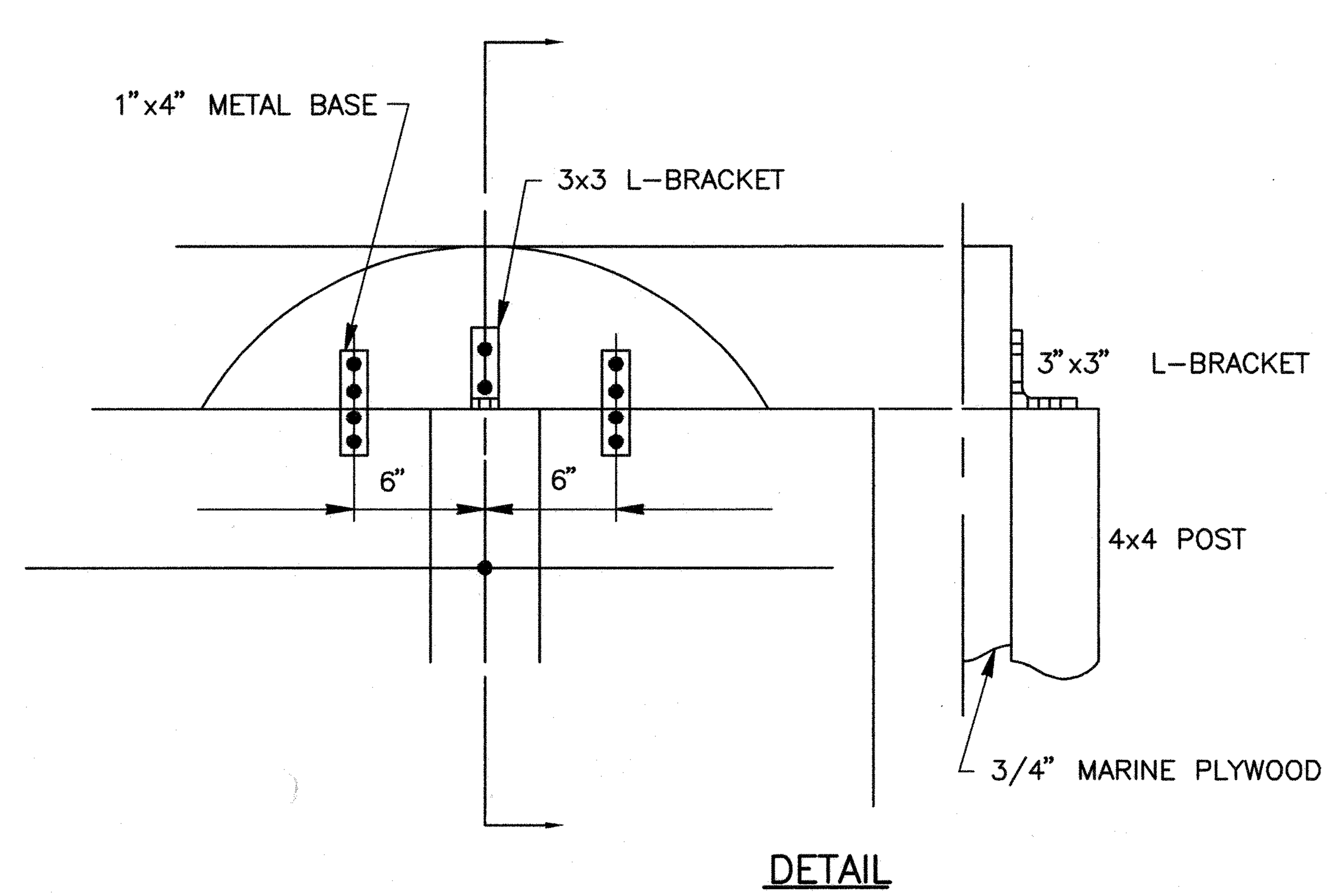

NOTES:

1. 2' x 2" x 4" SUPPORTS FASTENED WITH ½"ϕ x 3½" BUTTON HEAD CARRIAGE BOLTS, NUTS AND FLAT WASHERS.
2. 4" x 4" POSTS FASTENED TO SIGN WITH ½"ϕ x 5½" BUTTON HEAD CARRIAGE BOLTS, NUTS AND FLAT WASHERS.

REV NO	DESCRIPTION	APP'D	DATE

SEAL: STATE OF TEXAS — DAVID J. ROSS — 68267 — REGISTERED PROFESSIONAL ENGINEER — 2/19/99

SEAL: AS-BUILT — 1/25/02

CH2M HILL
7600 West Tidwell Road, Suite 400
Houston Tx 77040
713.462.0161

Binkley & Barfield, Inc.
Consulting Engineers
1710 Seamist Drive Houston, Texas 77008

ALMEDA SIMS
BIOSOLIDS
DRYER REHABILITATION

GFS NO: 0298-05-3
FILE NO: 4289-4

STANDARD CONSTRUCTION SIGN DETAIL

CITY OF HOUSTON
DEPARTMENT OF PUBLIC WORKS AND ENGINEERING
ENGINEERING, CONSTRUCTION AND REAL ESTATE GROUP

SECTION APPROVALS

WATER ENGINEERING
TRAFFIC AND SIGNAL ENGINEERING
WASTEWATER ENGINEERING 2-25-99
STREET & BRIDGE ENGINEERING
STORMWATER ENGINEERING
CONSTRUCTION 3/2/99
2/25/99

OTHER DEPARTMENTS

PLANNING AND DEVELOPMENT
SPONSOR DEPARTMENT
CITY ENGINEER 3-2-99 DATE
DIRECTOR OF PUBLIC WORKS AND ENGINEERING 3/5/99 DATE

SUBMITTED:
SCALE: NONE
DATE:
SURVEY BY:
F B NO:

DESIGNED BY: DJR
DRAWN BY: AAA
DWG. NO. : C-03
SHT NO 7 of 159 SHTS
CITY DWG NO: 35001

ORIGINAL SCALE IN INCHES FOR REDUCED PLANS
CADD DWG FILE NO :F:/64305/
FILE DATE—OPERATOR: 01/22/99-FG

02/23/99-DVB
FILE DATE--OPERATOR:

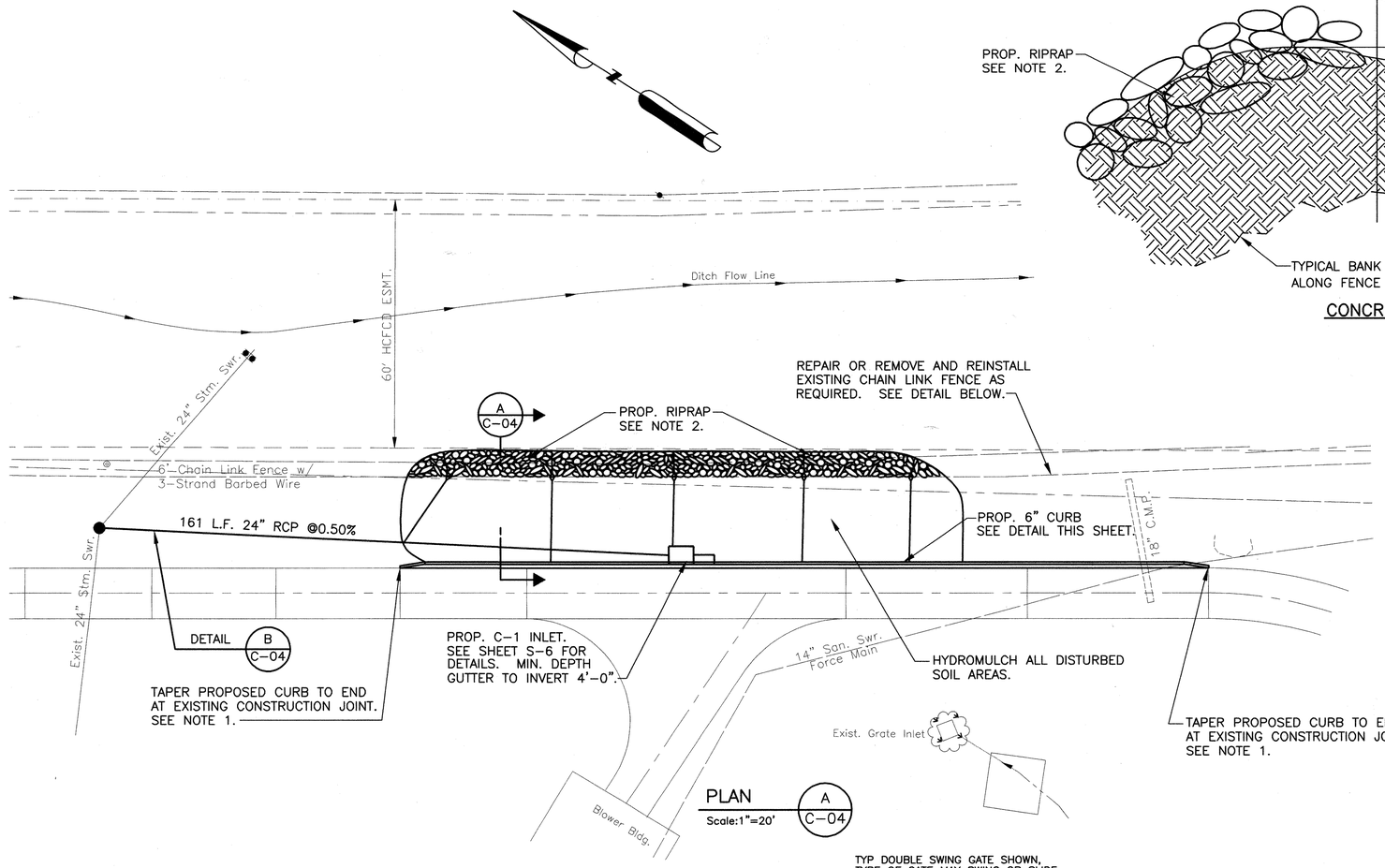

PLAN (A / C-04) Scale:1"=20'

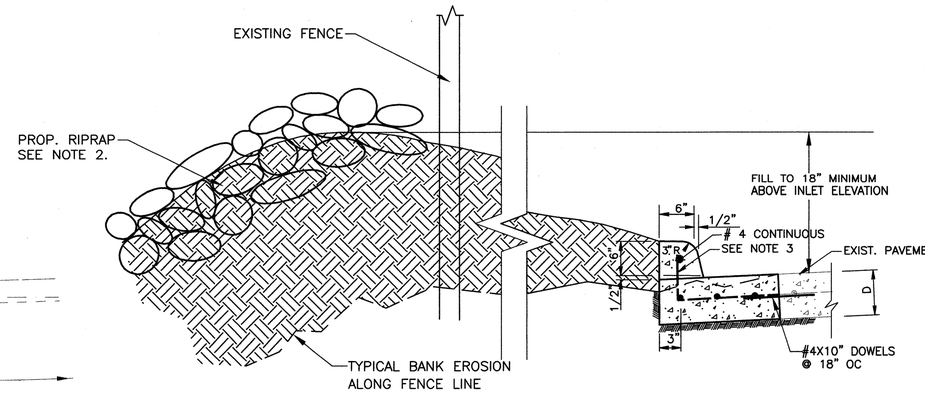

CONCRETE CURB AND BANK REPAIR

SECTION (A / C-04) NTS

NOTES

1. TAPER CURB IN 6' FROM 6" HEIGHT AND 18" WIDTH TO 0" HEIGHT AND 6" WIDTH.
2. GRADATION 1 RIPRAP TO BE EVENLY GRADED 18" MINIMUM THICKNESS, IN ALL AREAS WHERE BANK HAS ERODED ALONG FENCE LINE.
3. WHEN CONCRETE CURB IS TO BE PLACED ON EXISTING CONCRETE BASE USE # 4 @ 18 X 10" LONG, DOWELED AND SET IN QUICK SETTING CEMENT.
4. INSTALL 3/4" DIA. X 10'-0" LONG COPPER WELD GROUND ROD AT EACH END OF REPAIRED FENCE. CONNECT WITH A #4/0 BARE COPPER WIRE. THE #4/0 BARE COPPER WIRE IS TO BE USED AS THE BOTTOM TENSION WIRE.

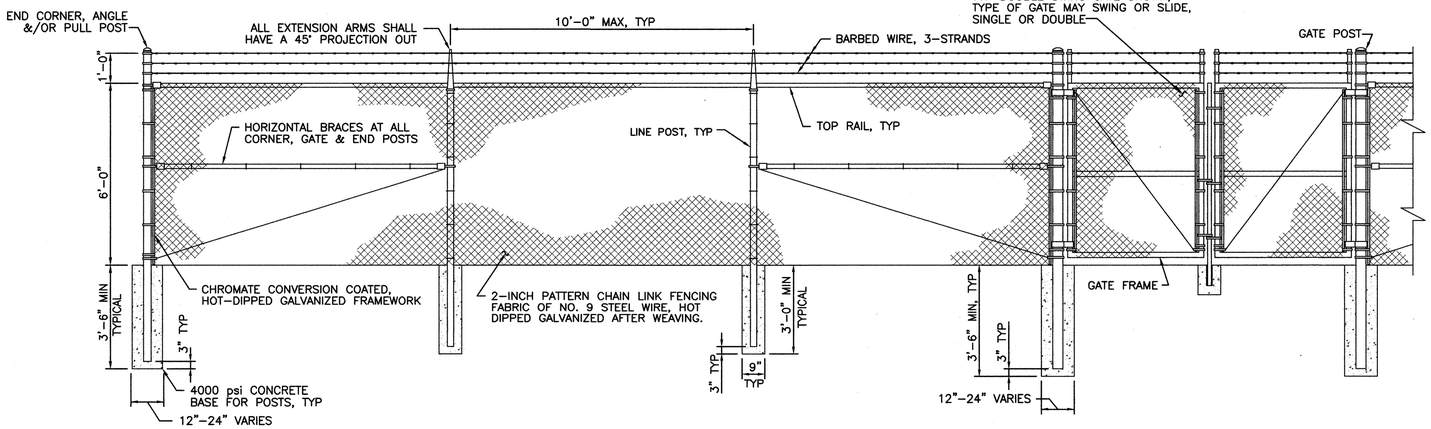

GENERAL SITE FENCING

ALL FENCING SHALL BE MANUFACTURED & INSTALLED PER SPECIFICATIONS

DETAIL (A / C-04) NTS

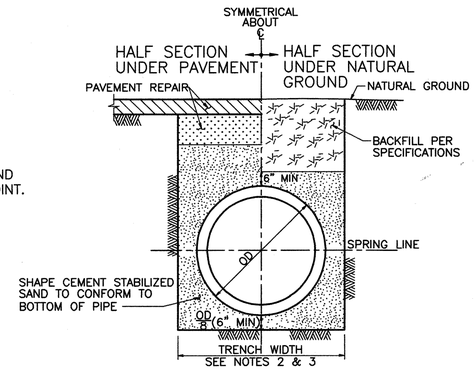

BEDDING AND BACKFILL DETAIL (B / C-04) NTS

NOTES:

1. THE METHOD OF INSTALLING CONCRETE PIPE STORM SEWERS SHOWN HEREON TO BE USED ONLY WHERE SOIL CONDITIONS ARE AS FOLLOWS:
   A. STRATA FROM THE SPRING LINE (CENTER) TO 3 FT BELOW THE FLOWLINE OF THE PIPE CONSIST OF NON-WATERBEARING COHESIVE SOILS HAVING A SHEAR STRENGTH OF 1000 PSF OR GREATER.
   B. NO WET SAND STRATA EXIST IN THE AREA FROM 1 FT ABOVE THE TOP OF THE PIPE TO 3 FT BELOW THE FLOWLINE.

   FOR ALL OTHER SOIL CONDITIONS USE RCP INSTALLED PER CITY DWG NO 02227-05, MRC CONSTRUCTION PER CITY DWG 02616-02 OR APPROVED SPECIAL DESIGN AS SHOWN ON PLANS.
2. MIN TRENCH WIDTH SHALL BE PIPE OD PLUS AN ALLOWANCE "A" FOR THE NOMINAL PIPE SIZE:

NOMINAL PIPE SIZE	"A"
LESS THAN 18"	18"
18" TO 30"	24"
OVER 30"	36"

3. MAX TRENCH WIDTH SHALL BE NOT GREATER THAN MIN TRENCH WIDTH PLUS 24 INCHES, UNLESS OTHERWISE NOTED.

REV NO	DESCRIPTION	APP'D	DATE

SEAL — STATE OF TEXAS — DAVID J. ROSS — 68267 — REGISTERED PROFESSIONAL ENGINEER

SEAL — AS-BUILT — 1/25/01

CH2M HILL
7600 West Tidwell Road, Suite 400
Houston Tx 77040
713.462.0161

Binkley & Barfield, Inc.
Consulting Engineers
1710 Seamist Drive Houston, Texas 77008

ALMEDA SIMS
BIOSOLIDS
DRYER REHABILITATION

GFS NO: 0298-05-3
FILE NO: 4289-4

PROPOSED CURB AND DRAINAGE

CITY OF HOUSTON
DEPARTMENT OF PUBLIC WORKS AND ENGINEERING
ENGINEERING, CONSTRUCTION AND REAL ESTATE GROUP

SECTION APPROVALS

WATER ENGINEERING — TRAFFIC AND SIGNAL ENGINEERING

WASTEWATER ENGINEERING — STREET & BRIDGE ENGINEERING

STORMWATER ENGINEERING — CONSTRUCTION

OTHER DEPARTMENTS

PLANNING AND DEVELOPMENT — SPONSOR DEPARTMENT

CITY ENGINEER — DATE 3-2-99

DIRECTOR OF PUBLIC WORKS AND ENGINEERING — DATE 3/3/99

SUBMITTED:
SCALE: 1"=20'
DATE:
SURVEY BY:
F B NO:

DESIGNED BY: DJR
DRAWN BY: DVB
DWG. NO. : C-04
SHT NO 8 of 159 SHTS

CITY DWG NO: 35001

ORIGINAL SCALE IN INCHES FOR REDUCED PLANS
0 1 2 3
CADD DWG FILE NO -F:/64305/64305A/C04.DWG

CADD DWG FILE NO : K:\RBI-AS\P1.DWG
FILE DATE-OPTION:OR

INSTRUMENT IDENTIFICATION EXAMPLE SYMBOLS

FIRST LETTER(S)
SUCCEEDING LETTERS

FIC XXXX — INSTRUMENT TAG NUMBER

TT — FIELD MOUNTED INSTRUMENT

FY — REAR-OF-PANEL MOUNTED INSTRUMENT

FIC — PANEL MOUNTED INSTRUMENT

FIC XXXX — DISTRIBUTED CONTROL SYSTEM DISPLAY POINT (DISPLAYED)

FIC XXXX — DISTRIBUTED CONTROL SYSTEM DISPLAY POINT (NOT DISPLAYED)

FIC — PANEL MOUNTED INSTRUMENT FUNCTION

XXX — LOCAL INDICATING LIGHT, WHERE XXX DESIGNATES FUNCTION
ALM=ALARM

* — EXISTING INSTRUMENT, RE-USED

VALVE SYMBOLS

- GATE, GV
- KNIFE GATE, KV
- BUTTERFLY, BV
- GLOBE, GLV
- BALL, BAV
- VEE BALL, VBV
- PLUG, PV
- SEAT PORT — ECCENTRIC PLUG, PV
- SWING CHECK, CV
- BUTTERFLY CHECK, CV
- FLOW CONTROL VALVE
- PRESSURE RELIEF, PRV
- AIR AND/OR VACUUM RELEASE, AV
- MANUAL AIR RELEASE
- SAMPLE
- DIAPHRAGM
- BALL CHECK, BCV
- FLAP VALVE, FV
- SLUICE OR SLIDE GATE, SG
- STOP LOG
- TELESCOPIC, TV

ACTUATOR SYMBOLS

- E / XX — ELECTRIC
- E Z / XX — ELECTRIC W/ POSITIONER
- S / XX — SOLENOID
- MANUAL

NOTE: ON LOSS OF PRIMARY POWER, XX DENOTES -
FO, FAIL OPEN
FC, FAIL CLOSED
FLP, FAIL TO LAST POSITION

ANALYZER IDENTIFICATION

CL_2	CHLORINE GAS
CL RES	CHLORINE RESIDUAL
CL	TOTAL CHLORINE
NH_3	AMMONIA
pH	pH

EXAMPLE: AE / CL_2

TRANSDUCERS IDENTIFICATION

E	VOLTAGE	Σ	SUM
I	CURRENT	P	PNEUMATIC
F	PULSE FREQUENCY		

EXAMPLE: FY I/F — CURRENT TO FREQUENCY TRANSDUCER

INTERFACE SYMBOLS

- 1 / S-1 — SIGNAL INTERFACE
- D-1 / A — PROCESS INTERFACE
- A, a — INTERFACE LETTER
- D-1 — DESTINATION DRAWING NO.
- S-1 — SOURCE DRAWING NO.
- INTERFACE TO OR FROM PROCESS EXTERNAL TO PROJECT
- L — PROGRAMMABLE CONTROLLER LOGIC SEE CONTROL DIAGRAMS
- I — HARDWIRED INTERLOCK LOGIC
- A — PROCESS OR SIGNAL LINE CONTINUATION

ABBREVIATIONS & LETTER SYMBOLS

AC	ALTERNATING CURRENT	NO	NORMALLY OPEN
CL	CLOSE	OC	OPEN-CLOSE (O)
DC	DIRECT CURRENT	OCA	OPEN-CLOSE-AUTO
FR	FORWARD-REVERSE	OCR	OPEN-CLOSE-REMOTE
HOA	HAND-OFF-AUTO	OCS	OPEN-CLOSE-STOP
HOR	HAND-OFF-REMOTE	OO	ON-OFF (MAINTAINED)
LOS	LOCKOUT STOP	OOA	ON-OFF-AUTO
LR	LOCAL-REMOTE	OOR	ON-OFF-REMOTE
MA	MANUAL-AUTO	OP	OPEN
MCC-X	MOTOR CONTROL CENTER NO. X	SS	START-STOP (MOMENTARY)
NC	NORMALLY CLOSED	TS	TEST START

FLOW STREAM IDENTIFICATION

AM	AMMONIA SOLUTION
CA	CAUSTIC SOLUTION
CL	CHLORINE GAS
CLS	CHLORINE SOLUTION
D	DIESEL
NPW	NONPOTABLE WATER
OF	OVERFLOW
PD	PLANT DRAIN
SW	SURFACE WATER
W	WATER
WW	WELL WATER

PRIMARY ELEMENT SYMBOLS

- FLOW TEST POINT
- ORIFICE PLATE
- ELECTROMAGNETIC FLOWMETER
- PROPELLER OR TURBINE METER
- PARSHALL FLUME
- LEVEL (CAPACITANCE OR ADMITTANCE)
- ULTRASONIC FLOWMETER (CLAMP-ON)
- LEVEL (ULTRASONIC)
- LEVEL (FLOAT)
- PITOT - AVERAGING

MISCELLANEOUS SYMBOLS

- DISC AERATOR
- SIGHT GLASS
- DIAPHRAGM SEAL
- BLIND FLANGE
- AIR GAP
- V — VENT TO ATMOSPHERE
- A — SELF CONTAINED AIR SUPPLY
- XP — PURGE SET X: W = WATER A = AIR
- EXPANSION JOINT
- FILTER
- INDICATOR LIGHT
- SILENCER
- FLAME ARRESTOR
- MANOMETER
- FAN
- 120 V — 120 VOLT. 60 HZ POWER
- 480 V — 480 VOLT. 60 HZ POWER
- 4160 V — 4160 VOLT. 60 HZ POWER
- FREE VENT
- MIXER
- M — ELECTRIC MOTOR
- H — HYDRAULIC MOTOR
- F — NPW — FLUSHING CONNECTION, HOSE ADAPTER, UNLESS OTHERWISE NOTED
- S — PW — SEAL WATER SET, SIGHT GLASS, UNLESS OTHERWISE NOTED
- HOSE STATION
- WYE STRAINER
- T — DRAIN TRAP
- F — FOG SPRAY CONNECTION
- W — WATER SPRAY CONNECTION

PUMP & COMPRESSOR SYMBOLS

NOTE: XX DENOTES -AS, ADJUSTABLE SPEED
CS-1, CONSTANT SPEED (SINGLE SPEED)

- CENTRIFUGAL PUMP XX
- PROGRESSIVE CAVITY PUMP XX
- GEAR PUMP OR BLOWER (POSITIVE DISPLACEMENT) XX
- SUBMERSIBLE PUMP XX
- EJECTOR
- AIR COMPRESSOR XX
- FIRE PUMP
- BLOWER (CENTRIFUGAL) XX
- CHEMICAL FEED PUMP XX
- VERTICAL PUMP XX

INSTRUMENT IDENTIFICATION LETTERS

	FIRST LETTERS		SUCCEEDING LETTERS		
	MEASURING OR INITIATING VARIABLE	MODIFIER	READOUT OR PASSIVE FUNCTION	OUTPUT FUNCTION	MODIFIER
A	ANALYSIS (+)		ALARM		
B	BURNER, COMBUSTION				
C				CONTROL	
D		DIFFERENTIAL			
E	VOLTAGE		SENSOR (PRIMARY ELEMENT)		
F	FLOW RATE	RATIO (FRACTION)			
G		GAUGE	GLASS, VIEWING DEVICE		
H	HAND				HIGH
I	CURRENT (ELECTRICAL)		INDICATE		
J	POWER	SCAN			
K	TIME, TIME SCHEDULE	TIME RATE OF CHANGE		CONTROL STATION	
L	LEVEL		LIGHT		LOW
M		MOMENTARY MOTION			MIDDLE, INTERMEDIATE
N	SURGE				
O			ORIFICE, RESTRICTION		
P	PRESSURE, VACUUM		POINT (TEST) CONNECTION		
Q	QUANTITY, EVENT	INTEGRATE, TOTALIZE			
R	RADIATION		RECORD		
S	SPEED, SOLENOID, FREQUENCY	SAFETY		SWITCH	
T	TEMPERATURE			TRANSMIT	
U	MULTIVARIABLE		MULTI-FUNCTION	MULTI-FUNCTION	MULTI-FUNCTION
V	VIBRATION, MECHANICAL ANALYSIS			VALVE, DAMPER, LOUVER	
W	WEIGHT, FORCE		WELL		
X	TORQUE ON-OFF (VALVES)	X AXIS			
Y	EVENT, STATE OR PRESENCE	Y AXIS		RELAY, COMPUTE, CONVERT	
Z	POSITION, DIMENSION	Z AXIS		DRIVER, ACTUATOR, UNCLASSIFIED FINAL CONTROL ELEMENT	

(+) WHEN USED, EXPLANATION IS SHOWN ADJACENT TO INSTRUMENT SYMBOL. SEE ABBREVIATIONS AND LETTER SYMBOL

GENERAL NOTES

1. COMPONENTS AND PANELS TO BE FURNISHED BY AN EQUIPMENT SUPPLIER ARE DESIGNATED ON INDIVIDUAL SHEETS. THESE INSTRUMENTS WILL BE INSTALLED BY CONTRACTOR.
2. ALL COMPONENTS AND PANELS NOT DESIGNATED AS FURNISHED BY AN EQUIPMENT SUPPLIER WILL BE FURNISHED AND SUPPLIED BY THE CONTRACTOR.
3. THIS IS A STANDARD LEGEND. NOT ALL OF THIS INFORMATION MAY BE USED ON THIS PROJECT.

LINE LEGEND

- PROCESS (CLOSED CONDUIT. DASHED LINE INDICATES EXISTING FLOW STREAM)
- PROCESS (BELT CONVEYOR)
- PROCESS (SCREW CONVEYOR)
- OPEN CHANNEL
- ELECTRICAL SIGNAL
- BUILDING OR FACILITY BOUNDARY
- CONNECTING LINES
- NON-CONNECTING LINES
- CONTROL AIR
- HYDRAULIC LINE

ORIGINAL SCALE IN INCHES FOR REDUCED PLANS
0 1 2 3

REV NO	DESCRIPTION	APP'D	DATE

SEAL — 11/25/02

SEAL — STATE OF TEXAS — JESSE M. CARR III — 52288 — REGISTERED PROFESSIONAL ENGINEER — 2-14-99

intellex CORPORATION
CONTROL SYSTEMS ENGINEERS
11230 WILCREST GREEN Houston, Texas 77042

RATNALA & BAHL, INC.
Engineers • Architects • Surveyors
11767 KATY FREEWAY, SUITE 510
HOUSTON, TEXAS 77079

CH2M HILL
7600 West Tidwell Road, Suite 400
Houston Tx 77040
713.462.0161

Binkley & Barfield, Inc.
Consulting Engineers
1710 Seamist Drive Houston, Texas 77008

ALMEDA SIMS
BIOSOLIDS
DRYER REHABILITATION

CIP NO 0298-05-3
FILE NO: 4289-4

PROCESS & INSTRUMENTATION DIAGRAM
SYMBOL LEGEND & ABBREVIATIONS

CITY OF HOUSTON
DEPARTMENT OF PUBLIC WORKS AND ENGINEERING
ENGINEERING, CONSTRUCTION AND REAL ESTATE GROUP

SECTION APPROVALS

WATER ENGINEERING
TRAFFIC AND SIGNAL ENGINEERING
WASTEWATER ENGINEERING — 2-25-99
STREET & BRIDGE ENGINEERING
STORMWATER ENGINEERING — 2/25/99
CONSTRUCTION — 3/2/99

OTHER DEPARTMENTS

PLANNING AND DEVELOPMENT
SPONSOR DEPARTMENT
CITY ENGINEER — 3-2-99 DATE
DIRECTOR OF PUBLIC WORKS AND ENGINEERING — 3/1/99 DATE

SUBMITTED:
SCALE: NONE
NONE
DATE: 12/7/98
SURVEY BY:
F B NO:

DESIGNED BY: JMC
DRAWN BY: RDF
DWG. NO. : P1
SHT NO 9 of 159 SHTS
CITY DWG NO: 35001

CADD DWG FILE NO : K: \BBI-AS\P2.DWG
FILE DATE-OPERATOR:

INTERLOCK NOTES:

1. MIXER MUST BE RUNNING TO START FILTER CAKE CONVEYOR 'E'.
2. HIGH TEMPERATURE IN PRE-HEATER OPENS PROTECTION DOOR.
3. OLD CONVEYOR S3 (OR NEW CONVEYOR DC1) MUST BE RUNNING TO START SCREW CONVEYOR (S1).
4. NEW CONVEYOR DC1 (OR OLD CONVEYOR S3) MUST BE RUNNING TO START SCREW CONVEYOR (S1).
5. FILTER CAKE CONVEYOR 'E' MUST BE RUNNING TO START FILTER CAKE CONVEYOR 'A'.
6. FILTER CAKE CONVEYOR 'A' MUST BE RUNNING TO START FILTER PRESS.
7. WATER SPRAY PUMP IS ACTIVATED ON HIGH TEMPERATURE IN CYCLONE OF 250° F.

MULTI-TUBE DUST COLLECTOR
I. D. FAN
ROTARY VALVE
TO CONVEYOR 'E'
SOOT BLOWER
COMBUSTION AIR PRE-HEATER
COMBUSTION AIR FAN
DEODORIZING PRE-HEATER
PRE-HEATER PROTECTION DOOR
LEFT BURNER
RIGHT BURNER
FURNACE
FOR BURNER CONTROLS SEE DWG. P4
PROCESS WATER LOW PRESSURE
PLANT WATER
WATER SPRAY PUMP
VAPOR FAN
RELIEF VENT
CYCLONE COLLECTOR
FLAP VALVE
DRY DIVIDER AND SCREW CONVEYOR
HYDRAULIC POWER UNIT
SCREW CONVEYOR S1
DRY SLUDGE TO LOADOUT & STORAGE SEE DWG. P4 FOR CONTINUATION
FROM DUST COLLECTOR
CAKE FROM FILTER PRESS
FILTER CAKE CONVEYOR 'A'
NO CAKE SENSOR No. 1
FILTER CAKE CONVEYOR 'E'
MIXER
CAGE MILL
PROCESS AIR LOW PRESSURE
INSTRUMENT AIR LOW PRESSURE
IAS AIR SUPPLY
TO PROCESS
PLANT AIR

NOTES:

(X) - INDICATES EXISTING TEMPERATURE ELEMENT DESIGNATION.
(W) - WATER SPRAY CONNECTION
(F) - FIRE FOG CONNECTION

ORIGINAL SCALE IN INCHES FOR REDUCED PLANS
0 1 2 3

REV NO	DESCRIPTION	APP'D	DATE
1	AS BUILT DRAWING	DJR	12/01

SEAL
STATE OF TEXAS — DAVID J. ROSS — 68267 — REGISTERED PROFESSIONAL ENGINEER
SEAL
AS BUILT
1/25/02

intellex CORPORATION
CONTROL SYSTEMS ENGINEERS
11230 WILCREST GREEN Houston, Texas 77042

CH2M HILL
7600 West Tidwell Road, Suite 400
Houston Tx 77040
713.462.0161

Binkley & Barfield, Inc.
Consulting Engineers
1710 Seamist Drive Houston, Texas 77008

ALMEDA SIMS BIOSOLIDS DRYER REHABILITATION

CIP NO 0298-05-3
FILE NO: 4289-4

PROCESS & INSTRUMENTATION DIAGRAM BIOSOLIDS DRYER NO.1

CITY OF HOUSTON

DEPARTMENT OF PUBLIC WORKS AND ENGINEERING
ENGINEERING, CONSTRUCTION AND REAL ESTATE GROUP

SECTION APPROVALS

WATER ENGINEERING
TRAFFIC AND SIGNAL ENGINEERING
WASTEWATER ENGINEERING
STREET & BRIDGE ENGINEERING
STORMWATER ENGINEERING
CONSTRUCTION

OTHER DEPARTMENTS

PLANNING AND DEVELOPMENT
SPONSOR DEPARTMENT

CITY ENGINEER — DATE
DIRECTOR OF PUBLIC WORKS AND ENGINEERING — DATE

SUBMITTED:	DESIGNED BY: JMC
SCALE: NONE NONE	DRAWN BY: RDF
DATE: 12/8/98	DWG. NO. : P2
SURVEY BY: N/A	SHT NO 10 of 159 SHTS
F B NO:	CITY DWG NO: 35001

CADD DWG FILE NO : K:\BBI-ASV\P2.DWG
FILE DATE-SPONSOR

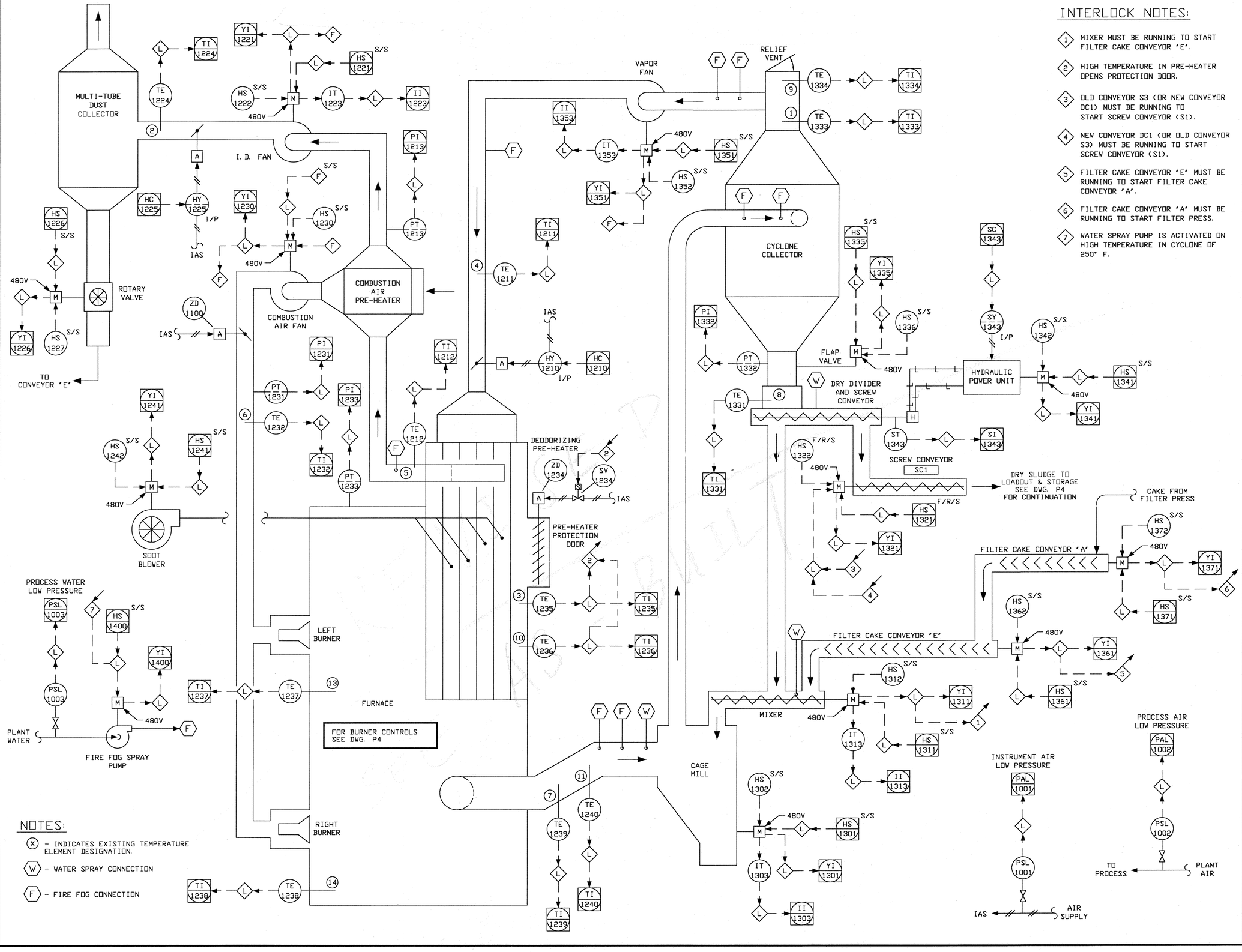

INTERLOCK NOTES:

1. MIXER MUST BE RUNNING TO START FILTER CAKE CONVEYOR 'E'.
2. HIGH TEMPERATURE IN PRE-HEATER OPENS PROTECTION DOOR.
3. OLD CONVEYOR S3 (OR NEW CONVEYOR DC1) MUST BE RUNNING TO START SCREW CONVEYOR (S1).
4. NEW CONVEYOR DC1 (OR OLD CONVEYOR S3) MUST BE RUNNING TO START SCREW CONVEYOR (S1).
5. FILTER CAKE CONVEYOR 'E' MUST BE RUNNING TO START FILTER CAKE CONVEYOR 'A'.
6. FILTER CAKE CONVEYOR 'A' MUST BE RUNNING TO START FILTER PRESS.
7. WATER SPRAY PUMP IS ACTIVATED ON HIGH TEMPERATURE IN CYCLONE OF 250° F.

NOTES:

- (X) - INDICATES EXISTING TEMPERATURE ELEMENT DESIGNATION.
- (W) - WATER SPRAY CONNECTION
- (F) - FIRE FOG CONNECTION

ORIGINAL SCALE IN INCHES FOR REDUCED PLANS
0 1 2 3

REV NO	DESCRIPTION	APP'D	DATE

SEAL

SEAL — STATE OF TEXAS — JESSE M. CARR III — 52288 — REGISTERED PROFESSIONAL ENGINEER — 2-24-99

intellex CORPORATION
CONTROL SYSTEMS ENGINEERS
11230 WILCREST GREEN Houston, Texas 77042

CH2M HILL
7600 West Tidwell Road, Suite 400
Houston Tx 77040
713.462.0161

Binkley & Barfield, Inc.
Consulting Engineers
1710 Seamist Drive Houston, Texas 77008

ALMEDA SIMS
BIOSOLIDS
DRYER REHABILITATION

CIP NO 0298-05-3
FILE NO: 4289-4

PROCESS & INSTRUMENTATION DIAGRAM
BIOSOLIDS DRYER NO.1

CITY OF HOUSTON
DEPARTMENT OF PUBLIC WORKS AND ENGINEERING
ENGINEERING, CONSTRUCTION AND REAL ESTATE GROUP

SECTION APPROVALS

WATER ENGINEERING — TRAFFIC AND SIGNAL ENGINEERING

WASTEWATER ENGINEERING — STREET & BRIDGE ENGINEERING

STORMWATER ENGINEERING — CONSTRUCTION

OTHER DEPARTMENTS

PLANNING AND DEVELOPMENT — SPONSOR DEPARTMENT

CITY ENGINEER — DATE 3-2-99

DIRECTOR OF PUBLIC WORKS AND ENGINEERING — DATE 3/5/99

SUBMITTED:	DESIGNED BY: JMC
SCALE: NONE NONE	DRAWN BY: RDF
DATE:12/8/98	DWG. NO. : P2
SURVEY BY: N/A	SHT NO 10 of 159 SHTS
F B NO:	CITY DWG NO: 35001

CADD DWG FILE NO : K:_BBJ-AS_P3.DWG
FILE PATE-OPERATOR:

INTERLOCK NOTES:

1. MIXER MUST BE RUNNING TO START FILTER CAKE CONVEYOR 'F'.
2. HIGH TEMPERATURE IN PRE-HEATER OPENS PROTECTION DOOR.
3. OLD CONVEYOR S3 (OR NEW CONVEYOR DC1) MUST BE RUNNING TO START SCREW CONVEYOR (S2).
4. NEW CONVEYOR DC1 (OR OLD CONVEYOR S3) MUST BE RUNNING TO START SCREW CONVEYOR (S2).
5. FILTER CAKE CONVEYOR 'F' MUST BE RUNNING TO START FILTER CAKE CONVEYOR 'D'.
6. FILTER CAKE CONVEYOR 'D' MUST BE RUNNING TO START FILTER PRESS.
7. WATER SPRAY PUMP IS ACTIVATED ON HIGH TEMPERATURE IN CYCLONE OF 250° F.

MULTI-TUBE DUST COLLECTOR
I.D. FAN
ROTARY VALVE
TO CONVEYOR 'F'
SOOT BLOWER
COMBUSTION AIR FAN
COMBUSTION AIR PRE-HEATER
DEODORIZING PRE-HEATER
PRE-HEATER PROTECTION DOOR
LEFT BURNER
RIGHT BURNER
FURNACE
FOR BURNER CONTROLS SEE DWG. P5
PLANT WATER
CS-1
WATER SPRAY PUMP
VAPOR FAN
RELIEF VENT
CYCLONE COLLECTOR
FLAP VALVE
DRY DIVIDER AND SCREW CONVEYOR
HYDRAULIC POWER UNIT
SCREW CONVEYOR S2
DRY SLUDGE TO LOADOUT & STORAGE SEE DWG. P4 FOR CONTINUATION
FROM DUST COLLECTOR
CAKE FROM FILTER PRESS
FILTER CAKE CONVEYOR 'D'
NO CAKE SENSOR No. 2
FILTER CAKE CONVEYOR 'F'
MIXER
CAGE MILL

NOTES:

- (X) - INDICATES EXISTING TEMPERATURE ELEMENT DESIGNATION.
- (W) - WATER SPRAY CONNECTION
- (F) - FIRE FOG CONNECTION

ORIGINAL SCALE IN INCHES FOR REDUCED PLANS
0 1 2 3

REV NO	DESCRIPTION	APP'D	DATE
1	AS BUILT DRAWING	DJR	12/01

SEAL — STATE OF TEXAS — DAVID J. ROSS — 68267 — REGISTERED PROFESSIONAL ENGINEER — 1/25/02

SEAL — AS-BUILT

intellex CORPORATION
CONTROL SYSTEMS ENGINEERS
11230 WILCREST GREEN Houston, Texas 77042

CH2M HILL
7600 West Tidwell Road, Suite 400
Houston Tx 77040
713.462.0161

Binkley & Barfield, Inc.
Consulting Engineers
1710 Seamist Drive Houston, Texas 77008

ALMEDA SIMS
BIOSOLIDS
DRYER REHABILITATION

CIP NO 0298-05-3
FILE NO: 4289-4

PROCESS & INSTRUMENTATION DIAGRAM
BIOSOLIDS DRYER NO.2

CITY OF HOUSTON
DEPARTMENT OF PUBLIC WORKS AND ENGINEERING
ENGINEERING, CONSTRUCTION AND REAL ESTATE GROUP

SECTION APPROVALS

WATER ENGINEERING
TRAFFIC AND SIGNAL ENGINEERING
WASTEWATER ENGINEERING
STREET & BRIDGE ENGINEERING
STORMWATER ENGINEERING
CONSTRUCTION

OTHER DEPARTMENTS

PLANNING AND DEVELOPMENT
SPONSOR DEPARTMENT

CITY ENGINEER — DATE
DIRECTOR OF PUBLIC WORKS AND ENGINEERING — DATE

SUBMITTED:
SCALE: NONE
NONE
DATE: 12/8/98
SURVEY BY: N/A
F B NO:

DESIGNED BY: JMC
DRAWN BY: RDF
DWG. NO. : P3
SHT NO 11 of 159 SHTS
CITY DWG NO: 35001

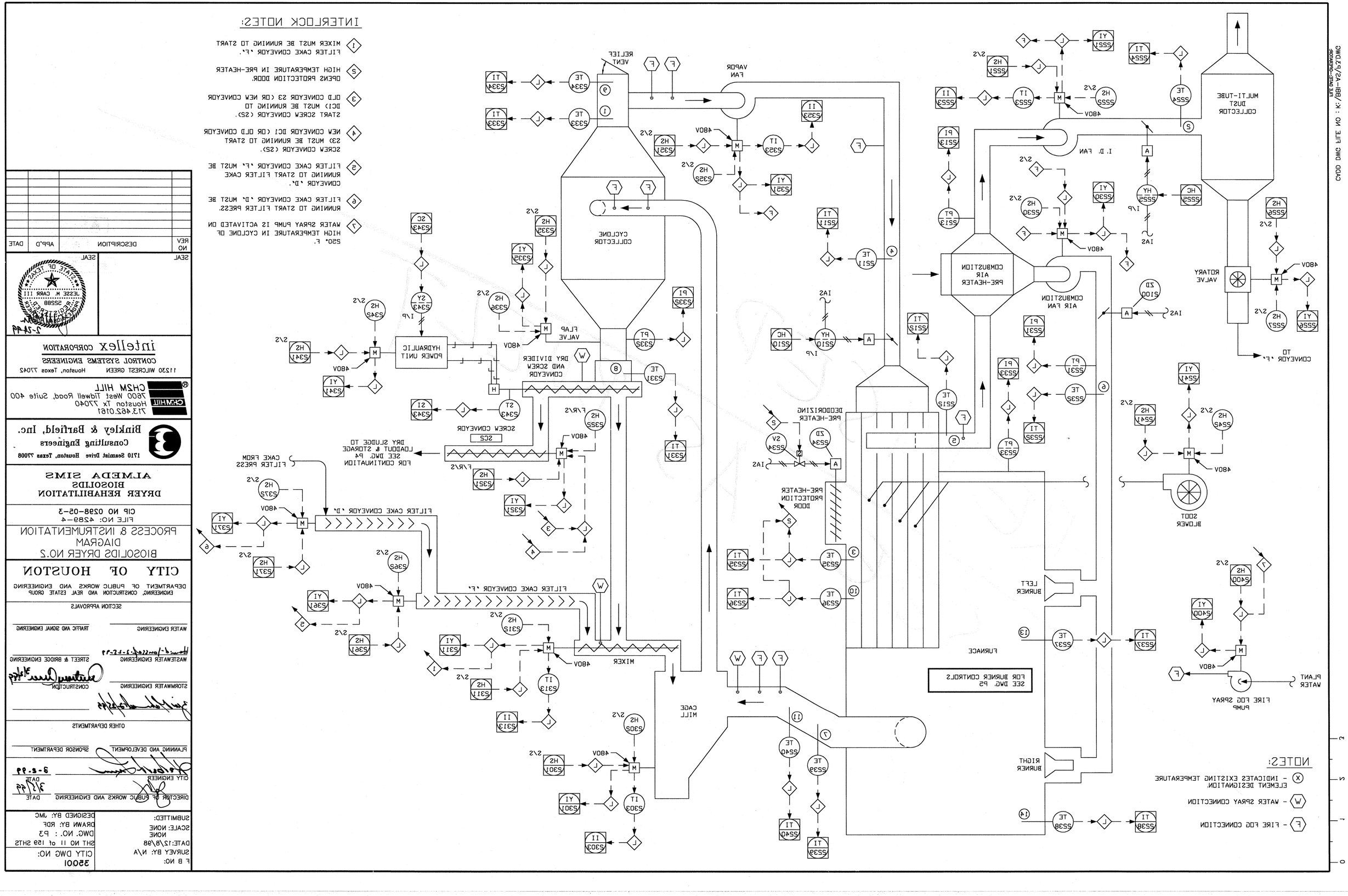

REV NO	DESCRIPTION	APP'D	DATE

SEAL

Intelliex CORPORATION
CONTROL SYSTEMS ENGINEERS
11230 WILCREST GREEN Houston, Texas 77042

CH2M HILL
7600 West Tidwell Road, Suite 400
Houston Tx 77040
713.462.0161

Binkley & Barfield, Inc.
Consulting Engineers
1710 Seamist Drive Houston, Texas 77008

ALMEDA SIMS
BIOSOLIDS
DRYER REHABILITATION

CIP NO 0298-05-3
FILE NO: 4298-4

PROCESS & INSTRUMENTATION DIAGRAM
BIOSOLIDS DRYER NO.2

CITY OF HOUSTON
DEPARTMENT OF PUBLIC WORKS AND ENGINEERING
ENGINEERING, CONSTRUCTION AND REAL ESTATE GROUP

SECTION APPROVALS

WATER ENGINEERING — TRAFFIC AND SIGNAL ENGINEERING

WASTEWATER ENGINEERING — STREET & BRIDGE ENGINEERING

STORMWATER ENGINEERING — CONSTRUCTION

OTHER DEPARTMENTS

PLANNING AND DEVELOPMENT — SPONSOR DEPARTMENT

CITY ENGINEER — DATE 3-2-99

DIRECTOR OF PUBLIC WORKS AND ENGINEERING — DATE 3/1/99

SUBMITTED:	DESIGNED BY: JMC
SCALE: NONE	DRAWN BY: RDF
DATE:12/8/98	DWG. NO. : P3
SURVEY BY: N/A	SHT NO 11 of 159 SHTS
F B NO:	CITY DWG NO: 35001

CADD DWG FILE NO : K:\BBI-ASV\P4.DWG
FILE DATE-OPERATOR:

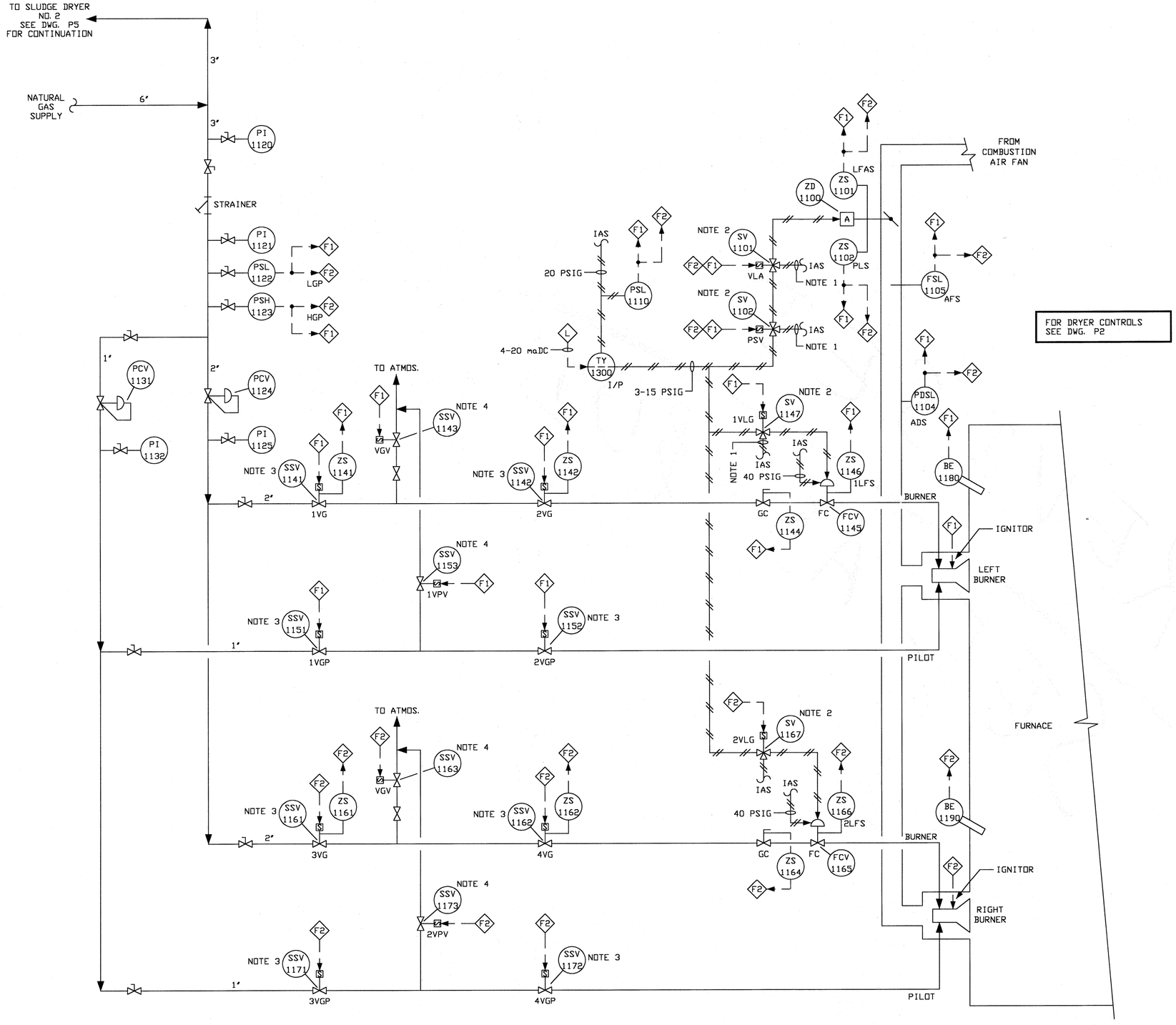

FOR DRYER CONTROLS SEE DWG. P2

NOTES:

1. INSTRUMENT AIR PRESSURE SETTING SHALL BE DETERMINED BY CONTRACTOR TO PROVIDE PROPER VALVE/DAMPER POSITION FOR BURNER FUNCTION WHEN SOLENOID VALVE IS ENERGIZED.
2. ALL BURNER CONTROL SOLENOID VALVES WILL PASS MODULATING AIR SIGNAL WHEN DE-ENERGIZED AND WILL SELECT PRESET CONSTANT PRESSURE CONTROL AIR WHEN ENERGIZED.
3. ALL GAS SSV's WILL FAIL CLOSE (DE-ENERGIZED).
4. ALL GAS VENT SSV's WILL FAIL OPEN (DE-ENERGIZED).

F1 INDICATES FLAME SAFETY SYSTEM FOR LEFT BURNER.

F2 INDICATES FLAME SAFETY SYSTEM FOR RIGHT BURNER.

LEGEND

— — — INDICATES 120 VAC ELECTRICAL SIGNAL UNLESS OTHERWISE NOTED.

REV NO	DESCRIPTION	APP'D	DATE

SEAL

SEAL

STATE OF TEXAS
JESSE M. CARR III
52288
REGISTERED PROFESSIONAL ENGINEER
2-24-99

intellex CORPORATION
CONTROL SYSTEMS ENGINEERS
11230 WILCREST GREEN Houston, Texas 77042

CH2M HILL
7600 West Tidwell Road, Suite 400
Houston Tx 77040
713.462.0161

Binkley & Barfield, Inc.
Consulting Engineers
1710 Seamist Drive Houston, Texas 77008

ALMEDA SIMS BIOSOLIDS DRYER REHABILITATION

CIP NO 0298-05-3
FILE NO: 4289-4

PROCESS & INSTRUMENTATION DIAGRAM BIOSOLIDS DRYER NO.1 COMBUSTION

CITY OF HOUSTON

DEPARTMENT OF PUBLIC WORKS AND ENGINEERING
ENGINEERING, CONSTRUCTION AND REAL ESTATE GROUP

SECTION APPROVALS

WATER ENGINEERING

TRAFFIC AND SIGNAL ENGINEERING

WASTEWATER ENGINEERING 2-26-99

STREET & BRIDGE ENGINEERING

STORMWATER ENGINEERING

CONSTRUCTION 3/2/99

2/25/99

OTHER DEPARTMENTS

PLANNING AND DEVELOPMENT

SPONSOR DEPARTMENT

CITY ENGINEER 3-2-99 DATE

DIRECTOR OF PUBLIC WORKS AND ENGINEERING 3/1/99 DATE

SUBMITTED:
SCALE: NONE
NONE
DATE:12/8/98
SURVEY BY: N/A
F B NO:

DESIGNED BY: JMC
DRAWN BY: RDF
DWG. NO. : P4
SHT NO 12 of 159 SHTS

CITY DWG NO:
35001

ORIGINAL SCALE IN INCHES FOR REDUCED PLANS
0 1 2 3

CADD DWG FILE NO : K:\BBJ-AS\P5.DWG
FILE DATE-OPERATOR:

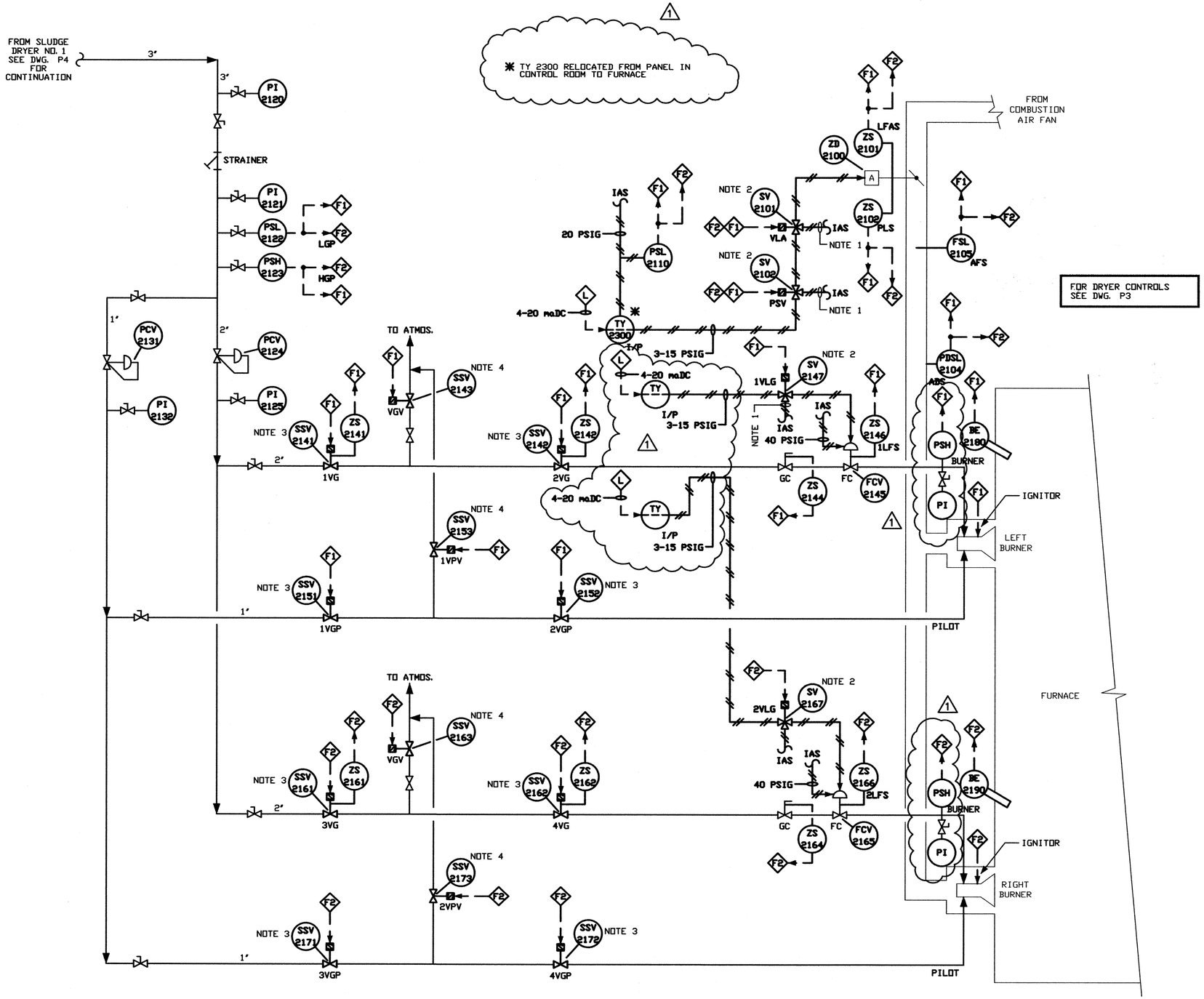

NOTES:

1. INSTRUMENT AIR PRESSURE SETTING SHALL BE DETERMINED BY CONTRACTOR TO PROVIDE PROPER VALVE/DAMPER POSITION FOR BURNER FUNCTION WHEN SOLENOID VALVE IS ENERGIZED.
2. ALL BURNER CONTROL SOLENOID VALVES WILL PASS MODULATING AIR SIGNAL WHEN DE-ENERGIZED AND WILL SELECT PRESET CONSTANT PRESSURE CONTROL AIR WHEN ENERGIZED.
3. ALL GAS SSV's WILL FAIL CLOSE (DE-ENERGIZED).
4. ALL GAS VENT SSV's WILL FAIL OPEN (DE-ENERGIZED).

F1 INDICATES FLAME SAFETY SYSTEM FOR LEFT BURNER.

F2 INDICATES FLAME SAFETY SYSTEM FOR RIGHT BURNER.

LEGEND

— — — INDICATES 120 VAC ELECTRICAL SIGNAL UNLESS OTHERWISE NOTED.

REV NO	DESCRIPTION	APP'D	DATE
1	AS BUILT DRAWING	DJR	12/01

SEAL — STATE OF TEXAS — DAVID J. ROSS — 68267 — REGISTERED PROFESSIONAL ENGINEER

SEAL — AS-BUILT — David J. Ross 4/25/02

intellex CORPORATION
CONTROL SYSTEMS ENGINEERS
11230 WILCREST GREEN Houston, Texas 77042

CH2M HILL
7600 West Tidwell Road, Suite 400
Houston Tx 77040
713.462.0161

Binkley & Barfield, Inc.
Consulting Engineers
1710 Seamist Drive Houston, Texas 77008

ALMEDA SIMS BIOSOLIDS DRYER REHABILITATION

CIP NO 0298-05-3
FILE NO: 4289-4

PROCESS & INSTRUMENTATION DIAGRAM
BIOSOLIDS DRYER NO.2 COMBUSTION

CITY OF HOUSTON

DEPARTMENT OF PUBLIC WORKS AND ENGINEERING
ENGINEERING, CONSTRUCTION AND REAL ESTATE GROUP

SECTION APPROVALS

WATER ENGINEERING — TRAFFIC AND SIGNAL ENGINEERING
WASTEWATER ENGINEERING — STREET & BRIDGE ENGINEERING
STORMWATER ENGINEERING — CONSTRUCTION

OTHER DEPARTMENTS

PLANNING AND DEVELOPMENT — SPONSOR DEPARTMENT

CITY ENGINEER — DATE
DIRECTOR OF PUBLIC WORKS AND ENGINEERING — DATE

SUBMITTED:
SCALE: NONE
NONE
DATE: 12/8/98
SURVEY BY: N/A
F B NO:

DESIGNED BY: JMC
DRAWN BY: RDF
DWG. NO. : P5
SHT NO 13 of 159 SHTS
CITY DWG NO: 35001

ORIGINAL SCALE IN INCHES FOR REDUCED PLANS
0 1 2 3

CADD DWG FILE NO : K:\RBI-AS\P6.DWG
FILE DATE--OPERATOR:

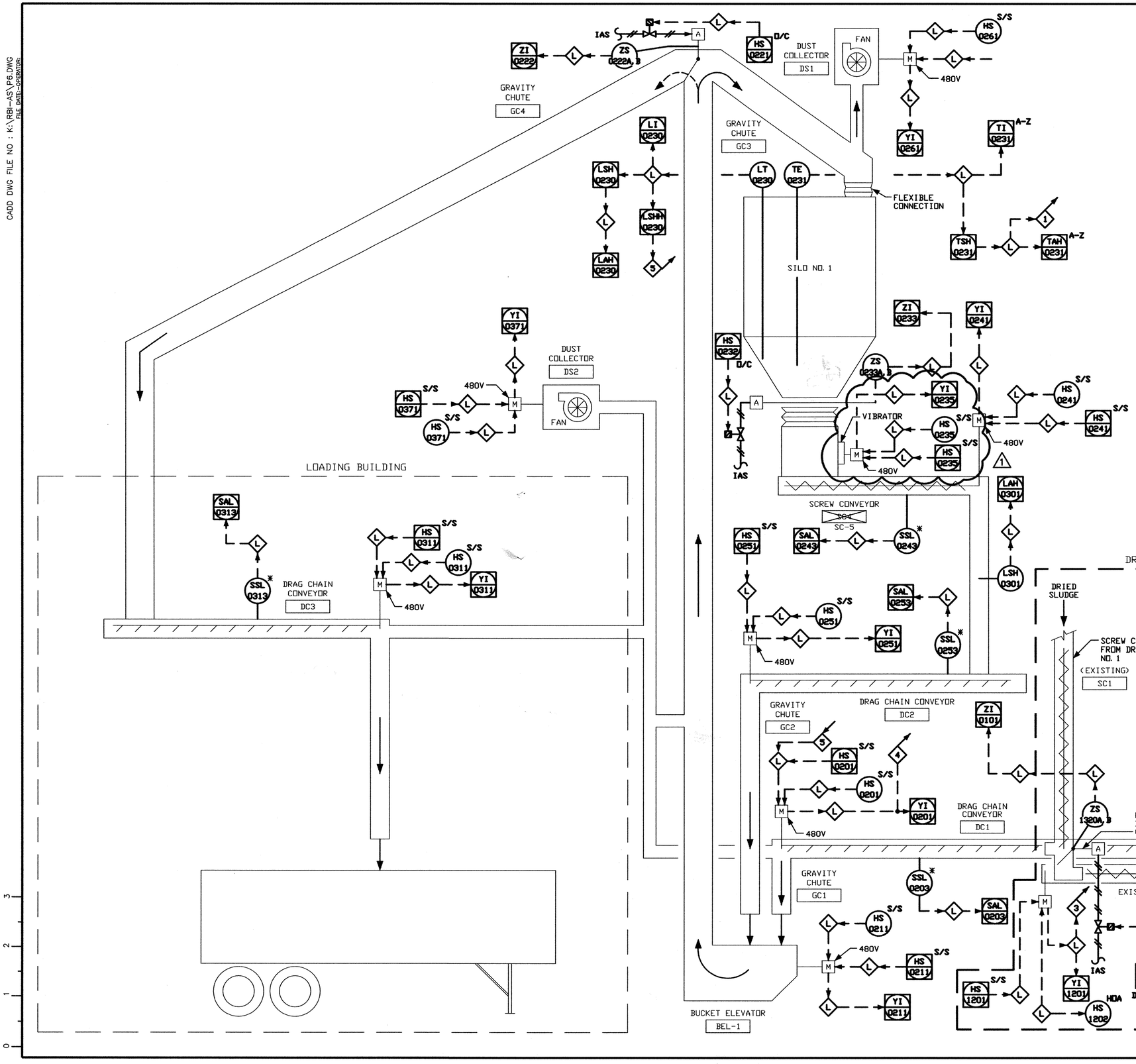

NOTES:

1. CONTROLS SHOWN IN DRYER BUILDING CONNECT TO PLC IN DRYER BUILDING, ALL OTHER CONTROLS CONNECT TO PLC IN LOADING BUILDING.
2. * - INDICATES INSTRUMENT IS FURNISHED WITH EQUIPMENT BY EQUIPMENT VENDOR.

INTERLOCK NOTES:

3. OLD CONVEYOR SC3 (OR NEW CONVEYOR DC1) MUST BE RUNNING TO START SCREW CONVEYORS (SC1 OR SC2).
4. NEW CONVEYOR DC1 (OR OLD CONVEYOR SC3) MUST BE RUNNING TO START SCREW CONVEYORS (SC1 OR SC2).
5. HIGH HIGH LEVEL IN SILO WILL STOP DC1 AND CHANGE DIVERTER GATE TO SC3 IF SC3 IS RUNNING.

REV NO	DESCRIPTION	APP'D	DATE
1	AS BUILT DRAWING	DJR	12/01

SEAL

STATE OF TEXAS
DAVID J. ROSS
68267
REGISTERED PROFESSIONAL ENGINEER

SEAL

AS-BUILT
1/25/02

intellex CORPORATION
CONTROL SYSTEMS ENGINEERS
11230 WILCREST GREEN Houston, Texas 77042

RATNALA & BAHL, INC.
Engineers • Architects • Surveyors
11767 KATY FREEWAY, SUITE 510
HOUSTON, TEXAS 77079

CH2M HILL
7600 West Tidwell Road, Suite 400
Houston Tx 77040
713.462.0161

Binkley & Barfield, Inc.
Consulting Engineers
1710 Seamist Drive Houston, Texas 77008

ALMEDA SIMS
BIOSOLIDS
DRYER REHABILITATION

CIP NO 0298-05-3
FILE NO: 4289-4

PROCESS & INSTRUMENTATION DIAGRAM
DRIED BIOSOLIDS CONVEYING

CITY OF HOUSTON
DEPARTMENT OF PUBLIC WORKS AND ENGINEERING
ENGINEERING, CONSTRUCTION AND REAL ESTATE GROUP

SECTION APPROVALS

WATER ENGINEERING	TRAFFIC AND SIGNAL ENGINEERING
WASTEWATER ENGINEERING	STREET & BRIDGE ENGINEERING
STORMWATER ENGINEERING	CONSTRUCTION

OTHER DEPARTMENTS

PLANNING AND DEVELOPMENT	SPONSOR DEPARTMENT

CITY ENGINEER ____ DATE ____

DIRECTOR OF PUBLIC WORKS AND ENGINEERING ____ DATE ____

SUBMITTED:	DESIGNED BY: JMC
SCALE: NONE NONE	DRAWN BY: RDF
DATE: 12/7/98	DWG. NO. : P6
SURVEY BY:	SHT NO 14 of 159 SHTS
F B NO:	CITY DWG NO: 35001

ORIGINAL SCALE IN INCHES
FOR REDUCED PLANS
0 1 2 3

CADD DWG FILE NO : K:\RBI-AS\P6.DWG
FILE OWNER-OPERATOR

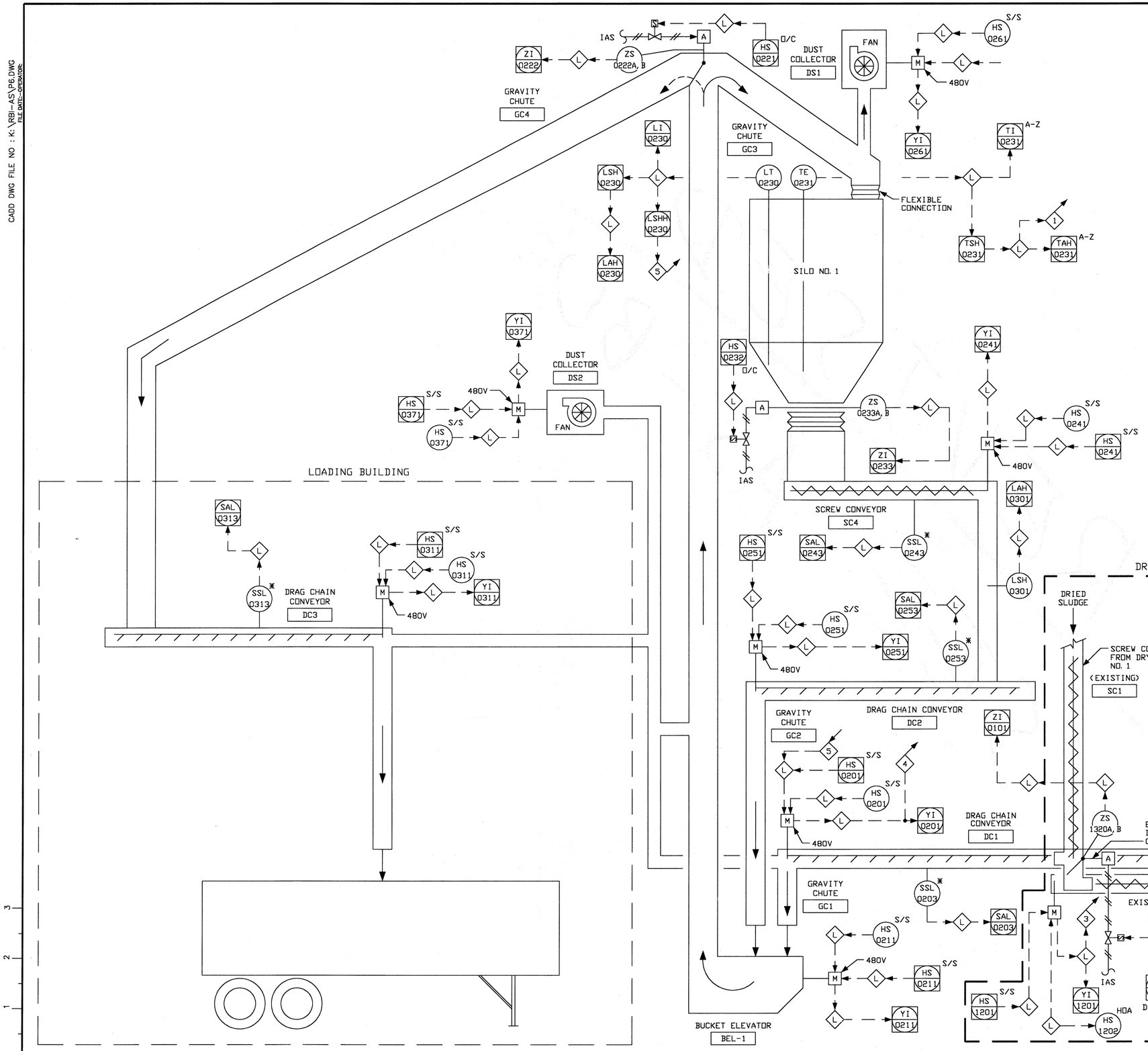

NOTES:

1. CONTROLS SHOWN IN DRYER BUILDING CONNECT TO PLC IN DRYER BUILDING, ALL OTHER CONTROLS CONNECT TO PLC IN LOADING BUILDING.
2. * - INDICATES INSTRUMENT IS FURNISHED WITH EQUIPMENT BY EQUIPMENT VENDOR.

INTERLOCK NOTES:

3. OLD CONVEYOR SC3 (OR NEW CONVEYOR DC1) MUST BE RUNNING TO START SCREW CONVEYORS (SC1 OR SC2).
4. NEW CONVEYOR DC1 (OR OLD CONVEYOR SC3) MUST BE RUNNING TO START SCREW CONVEYORS (SC1 OR SC2).
5. HIGH HIGH LEVEL IN SILO WILL STOP DC1 AND CHANGE DIVERTER GATE TO SC3 IF SC3 IS RUNNING.

REV NO	DESCRIPTION	APP'D	DATE

SEAL

SEAL

STATE OF TEXAS
JESSE M. CARR III
NO. 52288
REGISTERED
PROFESSIONAL ENGINEER
2-24-99

intellex CORPORATION
CONTROL SYSTEMS ENGINEERS
11230 WILCREST GREEN Houston, Texas 77042

RATNALA & BAHL, INC.
Engineers • Architects • Surveyors
11767 KATY FREEWAY, SUITE 510
HOUSTON, TEXAS 77079

CH2M HILL
7600 West Tidwell Road, Suite 400
Houston Tx 77040
713.462.0161

Binkley & Barfield, Inc.
Consulting Engineers
1710 Seamist Drive Houston, Texas 77008

ALMEDA SIMS
BIOSOLIDS
DRYER REHABILITATION

CIP NO 0298-05-3
FILE NO: 4289-4

PROCESS & INSTRUMENTATION DIAGRAM
DRIED BIOSOLIDS CONVEYING

CITY OF HOUSTON
DEPARTMENT OF PUBLIC WORKS AND ENGINEERING
ENGINEERING, CONSTRUCTION AND REAL ESTATE GROUP

SECTION APPROVALS

WATER ENGINEERING — TRAFFIC AND SIGNAL ENGINEERING

WASTEWATER ENGINEERING — STREET & BRIDGE ENGINEERING

STORMWATER ENGINEERING — CONSTRUCTION

OTHER DEPARTMENTS

PLANNING AND DEVELOPMENT — SPONSOR DEPARTMENT

CITY ENGINEER — DATE 3-2-99

DIRECTOR OF PUBLIC WORKS AND ENGINEERING — DATE 3/2/99

SUBMITTED:
SCALE: NONE
NONE
DATE:12/7/98
SURVEY BY:
F B NO:

DESIGNED BY: JMC
DRAWN BY: RDF
DWG. NO. : P6
SHT NO 14 of 159 SHTS

CITY DWG NO:
35001

ORIGINAL SCALE IN INCHES FOR REDUCED PLANS
0 1 2 3

CADD DWG FILE NO :F:/64305/64305A/P-07.DWG
FILE DATE:--OPERATOR: 01/21/99--RPD

BFP-2200 LOCAL CONTROL PANEL

HS 1202C SS — SLUDGE FEED PUMP SELECTION SWITCH

HS 1202D SS — POLMER PUMP SELECTION SWITCH

BFP-2300 LOCAL CONTROL PANEL

HS 1203C SS — SLUDGE FEED PUMP SELECTION SWITCH

HS 1203D SS — POLMER PUMP SELECTION SWITCH

BFP-2200

BFP-2300

FLEX HOSE 6' X 1 1/2"

FLEX HOSE 6' X 1 1/2"

PM-3200 POLYMER MIXER

PM-3300 POLYMER MIXER

XV 3151B

XV 3151A

HV 3150

1"

XV 3251B

XV 3251A

XV 3351B

XV 3351A

PI 3200M 0-30 PSIG

PN 3200M

HV 3200B

HV 3200A

PI 3300M 0-30 PSIG

PN 3300M

HV 3300B

HV 3300A

REMOVABLE SPOOLS SEE NOTE: 2

REMOVABLE SPOOLS SEE NOTE: 2

HV 3250

HV 3350

4" 6"

HV 1206

HV 1306

FT 1205

MAGNETIC FLOW METER

HV 1205

FT 1305

MAGNETIC FLOW METER

HV 1305

4"

4"

M 6" PRS XV 1107A

XV 1107B

PLC REPROGRAM PLC

BFP-2300 MAIN CONTROL PANEL

XV 1207B

HV 1104

1"

6" PRS

6" PRS

PSE 1104

6" PRS

XV 1207A

XV 1307A

XV 1307B

A

A

PSH 1103

HV 1103

PN 1103

1"

PSH 1103

OFF TO 30 SEC

PI 1103

M -P- VFD -P- 480V

FSL 1101

6"

8"

10"

10"

FROM SLUDGE HOLDING TANK

P

120V

SFP-1100 SLUDGE FEED PUMP

HV 1204

PSE 1204

HV 1203

6" PRS

PN 1203

PSH 1203

PI 1203

M -P- VFD

SFP-1200 SLUDGE FEED PUMP

HV 1304

PSE 1304

HV 1303

6" PRS

PN 1303

PSH 1303

PI 1303

M -P- VFD

SFP-1300 SLUDGE FEED PUMP

PLC REPROGRAM PLC

BFP-2200 MAIN CONTROL PANEL

PDU-3100 SECOND STAGE POLYMER DILUTION UNIT

- QL 3100 ON POWER
- QL 3100 ON CONTROL
- HS 3100 OO POWER
- HS 3100 LOR CONTROL
- HS 3100 DE ALARM
- SC 3100 OUTPUT
- QL 3100 DIL.WATER LOW FLOW
- FI 3100 FLOW RATE BASED ON PUMP CTRL.
- QL 3100 POLYMER LOW FLOW
- M MOTOR OPERATED VALVE
- PI 3100 0-180 DILUTION WATER
- FI 3100 ROT DILUTION WATER
- PSL 3100 SET @40 PSI DILUTION WATER
- FSL 3100 THERMAL POLYMER
- PI 3100 0-180 MIXING CHAMBER

PDU-3200 SECOND STAGE POLYMER DILUTION UNIT

PDU-3300 SECOND STAGE POLYMER DILUTION UNIT

ORIGINAL SCALE IN INCHES FOR REDUCED PLANS

0 1 2 3

NOTES:

1. THE CONTROL DIAGRAMS INDICATE ONLY THE GENERAL CHARACTERISTICS OF THE CONTROL SEQUENCES AND ALARMS. THE EQUIPMENT MANUFACTURER/SUPPLIER SHALL SUBMIT DETAILED INTERCONNECT WIRING AND CONDUIT DIAGRAMS FOR THE EQUIPMENT FURNISHED. THE CONTRACTOR SHALL COORDINATE THE WIRING BETWEEN EQUIPMENT, FIELD INSTRUMENT/LOCAL PANELS AND THE MOTOR CONTROL CENTERS.
2. SEE ELECTRICAL DRAWING NOS. E-06, E-07 , E-08, AND E-09 FOR INSTRUMENTATION CONTROL AND POWER.
3. UP TO 100 % OF THE EXISTING INSTRUMENTATION WIREING AND CONDUIT MAY REQUIRE REPLACEMENT. THE CONTRACTOR SHALL PROVIDE ADEQUATE CONDUIT AND WIRING (WITH 25% SPARE CAPACITY) FOR ALL FUNCTIONS SHOWN OR DESCRIBED ON THE DRAWINGS AND FOR ALL FUNCTIONS DESCRIBED IN THE CONTRACT DOCUMENTS (EVEN IF IT IS NOT SHOWN ON THE DRAWINGS) AT NO ADDITIONAL COST TO THE OWNER OR OWNER'S AGENT.

REV NO	DESCRIPTION	APP'D	DATE

SEAL — DAVID J. ROSS 68267 REGISTERED PROFESSIONAL ENGINEER STATE OF TEXAS — 1/19/99

SEAL — AS-BUILT 1/28/02

CH2M HILL
7600 West Tidwell Road, Suite 400
Houston Tx 77040
713.462.0161

Binkley & Barfield, Inc.
Consulting Engineers
1710 Seamist Drive Houston, Texas 77008

ALMEDA SIMS BIOSOLIDS DRYER REHABILITATION

CIP NO 0265-01-2
FILE NO: 4289-4

PROCESS & INSTRUM. DIAGRAM SLUDGE PUMPING IMPROVEMENTS BFP-2200 & 2300

CITY OF HOUSTON

DEPARTMENT OF PUBLIC WORKS AND ENGINEERING
ENGINEERING, CONSTRUCTION AND REAL ESTATE GROUP

SECTION APPROVALS

WATER ENGINEERING

TRAFFIC AND SIGNAL ENGINEERING

Hamid Jamshidi 2-25-99
WASTEWATER ENGINEERING

STREET & BRIDGE ENGINEERING

STORMWATER ENGINEERING

Anthony Cruz 3/2/99
CONSTRUCTION

2/25/99

OTHER DEPARTMENTS

PLANNING AND DEVELOPMENT

SPONSOR DEPARTMENT

CITY ENGINEER 3-2-99 DATE

DIRECTOR OF PUBLIC WORKS AND ENGINEERING 3/3/99 DATE

SUBMITTED:
SCALE: NONE NONE
DATE:
SURVEY BY:
F B NO:

DESIGNED BY: DJR
DRAWN BY: AAA
DWG. NO. : P-07
SHT NO 15 of 159 SHTS

CITY DWG NO: 35001

CADD DWG FILE NO :F:/64305/64305A/P-08.DWG
FILE DATE--OPERATOR- 01/21/99-RPD

BFP-2400 LOCAL CONTROL PANEL

HS 1202C SS — SLUDGE FEED PUMP SELECTION SWITCH

HS 1202D SS — POLMER PUMP SELECTION SWITCH

BFP-2600 LOCAL CONTROL PANEL

HS 1203C SS — SLUDGE FEED PUMP SELECTION SWITCH

HS 1203D SS — POLMER PUMP SELECTION SWITCH

BFP-2400

BFP-2600

FLEX HOSE 6' X 1 1/2"

FLEX HOSE 6' X 1 1/2"

PM-3400 POLYMER MIXER

PM-3600 POLYMER MIXER

XV 3551B

XV 3551A

HV 3550

XV 3451B

XV 3451A

XV 3651B

XV 3651A

HV 3450

HV 3650

PI 3400M 0-30 PSIG

PN 3400M

HV 3400B

HV 3400A

PI 3600M 0-30 PSIG

PN 3600M

HV 3600B

HV 3600A

REMOVABLE SPOOLS SEE NOTE:2

REMOVABLE SPOOLS SEE NOTE:2

6"

4"

HV 1406

HV 1606

FT 1405

MAGNETIC FLOW METER

HV 1405

FT 1605

MAGNETIC FLOW METER

HV 1605

4"

4"

M

6" PRS

XV 1507A

XV 1507B

PLC REPROGRAM PLC

BFP-2600 MAIN CONTROL PANEL

HV 1504

1"

6" PRS

PSE 1504

XV 1407B

XV 1407A

XV 1607A

XV 1607B

6" PRS

6" PRS

A

A

PSH 1503

HV 1503

PN 1503

1"

PI 1503

OFF TO 30 SEC

PSH 1503

M — P — VFD — P — 480V

FSL 1501

6"

8"

10"

10"

FROM SLUDGE HOLDING TANK

P

120V

SFP-1500 SLUDGE FEED PUMP

PDU-3500 SECOND STAGE POLYMER DILUTION UNIT

QL 3500	ON POWER	QL 3500	ON CONTROL
HS 3500	OO POWER	HS 3500	LOR CONTROL
HS 3500	DE ALARM	SC 3500	OUTPUT
QL 3500	DIL.WATER LOW FLOW	FI 3500	FLOW RATE BASED ON PUMP CTRL.
QL 3500	POLYMER LOW FLOW	M	MOTOR OPERATED VALVE
PI 3500	0-180 DILUTION WATER	FI 3500	ROT DILUTION WATER
PSL 3500	SET @40 PSI DILUTION WATER	FSL 3500	THERMAL POLYMER
PI 3500	0-180 MIXING CHAMBER		

PDU-3400 SECOND STAGE POLYMER DILUTION UNIT

PDU-3600 SECOND STAGE POLYMER DILUTION UNIT

PLC REPROGRAM PLC

BFP-2400 MAIN CONTROL PANEL

HV 1404

PSE 1404

HV 1403

PN 1403

PSH 1403

PI 1403

6" PRS

M — P — VFD

SFP-1400 SLUDGE FEED PUMP

HV 1604

PSE 1604

HV 1603

PN 1603

PSH 1603

PI 1603

6" PRS

M — P — VFD

SFP-1600 SLUDGE FEED PUMP

NOTES:

1. THE CONTROL DIAGRAMS INDICATE ONLY THE GENERAL CHARACTERISTICS OF THE CONTROL SEQUENCES AND ALARMS. THE EQUIPMENT MANUFACTURER/SUPPLIER SHALL SUBMIT DETAILED INTERCONNECT WIRING AND CONDUIT DIAGRAMS FOR THE EQUIPMENT FURNISHED. THE CONTRACTOR SHALL COORDINATE THE WIRING BETWEEN EQUIPMENT, FIELD INSTRUMENT/LOCAL PANELS AND THE MOTOR CONTROL CENTERS.
2. SEE ELECTRICAL DRAWING NOS. E-06, E-07 , E-08, AND E-09 FOR INSTRUMENTATION CONTROL AND POWER.
3. UP TO 100 % OF THE EXISTING INSTRUMENTATION WIREING AND CONDUIT MAY REQUIRE REPLACEMENT. THE CONTRACTOR SHALL PROVIDE ADEQUATE CONDUIT AND WIRING (WITH 25% SPARE CAPACITY) FOR ALL FUNCTIONS SHOWN OR DESCRIBED ON THE DRAWINGS AND FOR ALL FUNCTIONS DESCRIBED IN THE CONTRACT DOCUMENTS (EVEN IF IT IS NOT SHOWN ON THE DRAWINGS) AT NO ADDITIONAL COST TO THE OWNER OR OWNER'S AGENT.

REV NO	DESCRIPTION	APP'D	DATE

SEAL — STATE OF TEXAS — DAVID J. ROSS — 68267 — REGISTERED PROFESSIONAL ENGINEER

SEAL — AS-BUILT 1/25/02

CH2M HILL
7600 West Tidwell Road, Suite 400
Houston Tx 77040
713.462.0161

Binkley & Barfield, Inc.
Consulting Engineers
1710 Seamist Drive Houston, Texas 77008

ALMEDA SIMS
BIOSOLIDS
DRYER REHABILITATION

CIP NO 0265-01-2
FILE NO: 4289-4

PROCESS & INSTRUM. DIAGRAM
SLUDGE PUMPING IMPROVEMENTS
BFP-2400 & 2600

CITY OF HOUSTON

DEPARTMENT OF PUBLIC WORKS AND ENGINEERING
ENGINEERING, CONSTRUCTION AND REAL ESTATE GROUP

SECTION APPROVALS

WATER ENGINEERING

TRAFFIC AND SIGNAL ENGINEERING

WASTEWATER ENGINEERING — Hamid Jamseh 2-25-99

STREET & BRIDGE ENGINEERING

STORMWATER ENGINEERING — 2/25/99

CONSTRUCTION

OTHER DEPARTMENTS

PLANNING AND DEVELOPMENT

SPONSOR DEPARTMENT

CITY ENGINEER — 3-2-99 DATE

DIRECTOR OF PUBLIC WORKS AND ENGINEERING — 3/5/99 DATE

SUBMITTED:
SCALE: NONE
NONE
DATE:
SURVEY BY:
F B NO:

DESIGNED BY: DJR
DRAWN BY: AAA
DWG. NO. : P-08
SHT NO 16 of 159 SHTS

CITY DWG NO: 35001

ORIGINAL SCALE IN INCHES FOR REDUCED PLANS
0 1 2 3

CADD DWG FILE NO : K:\BBI-AS\I1.DWG
FILE DATE-OPERATOR:

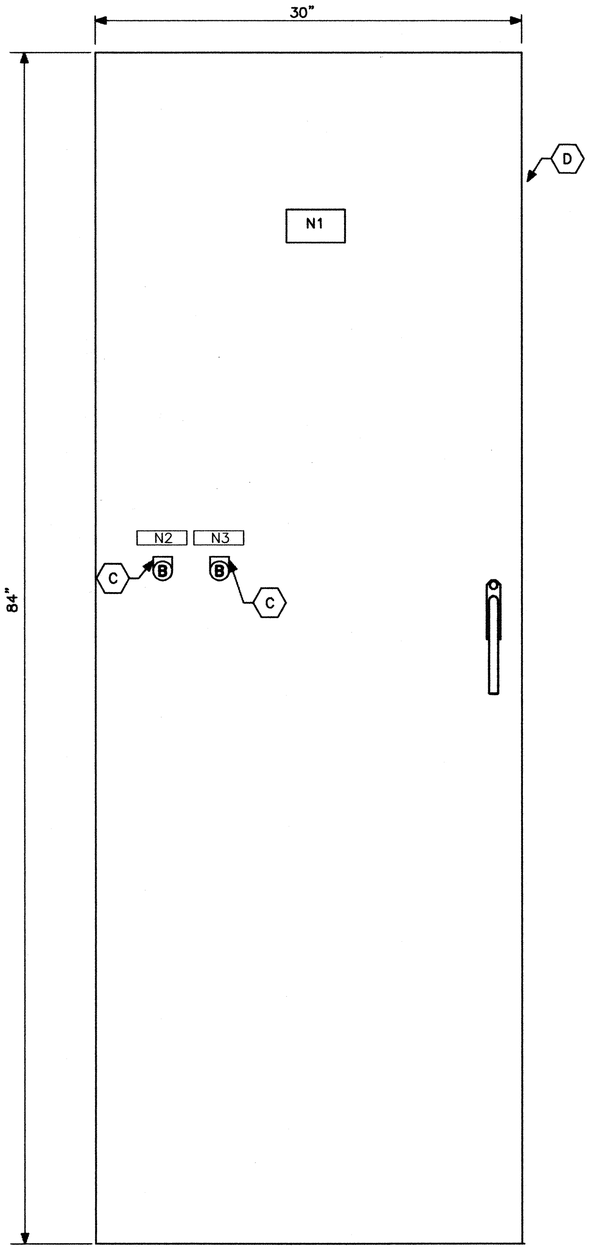

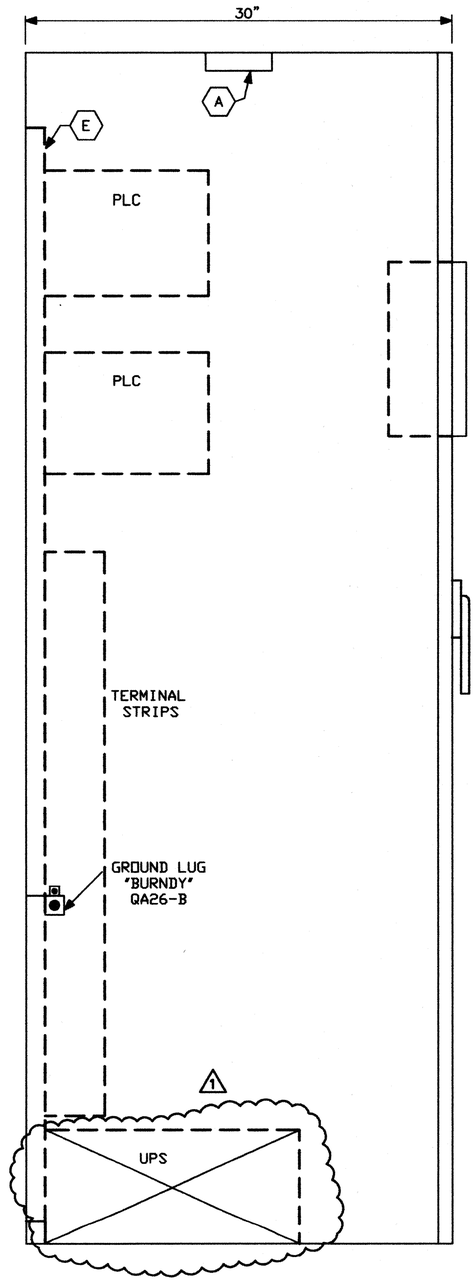

CONTROL PANEL FRONT ELEVATION

SIDE ELEVATION

NOTES:

1. NAMEPLATES SHALL BE MOUNTED TO PANELS USING STAINLESS STEEL HARDWARE.
2. NAMEPLATES SHALL BE BLACK LAMACOID WITH 1/4" WHITE LETTERS.
3. CABINET SHALL BE OPEN AT THE BOTTOM.

BILL OF MATERIALS

TAG	DESCRIPTION	QTY
A	24 WATT, SINGLE BULB, FLUORESCENT LIGHT	1
B	N. O. PUSHBUTTON, ALLEN-BRADLEY 800H-AR2D1 OR EQUAL	2
C	LEGEND PLATE, ALLEN-BRADLEY "EMERGENCY STOP" 800H-W373 OR EQUAL	2
D	NEMA 12 84x30x30 HOFFMAN CABINET 843030LP OR EQUAL (NOTE 3)	1
E	81x27 HOFFMAN PANEL A-84P30 OR EQUAL	1

NAMEPLATE SCHEDULE

ITEM	SIZE	LINE 1	LINE 2	LINE 3
N1	2"x5"	BIOSOLIDS	DRYERS	PANEL CP-100A
N2	1"x3-1/2"	EMERGENCY	STOP	DRYER #1
N3	1"x3-1/2"	EMERGENCY	STOP	DRYER #2

REV NO	DESCRIPTION	APP'D	DATE
1	AS BUILT DRAWING	DJR	12/01

SEAL

STATE OF TEXAS
DAVID J. ROSS
68267
REGISTERED PROFESSIONAL ENGINEER

SEAL

AS-BUILT
1/25/02

intellex CORPORATION
CONTROL SYSTEMS ENGINEERS
11230 WILCREST GREEN Houston, Texas 77042

CH2M HILL
7600 West Tidwell Road, Suite 400
Houston Tx 77040
713.462.0161

Binkley & Barfield, Inc.
Consulting Engineers
1710 Seamist Drive Houston, Texas 77008

ALMEDA SIMS
BIOSOLIDS
DRYER REHABILITATION

CIP NO 0298-05-3
FILE NO: 4289-4

CONTROL SYSTEM PANEL
BIOSOLIDS DRYERS
PANEL CP-100A FACE LAYOUT

CITY OF HOUSTON
DEPARTMENT OF PUBLIC WORKS AND ENGINEERING
ENGINEERING, CONSTRUCTION AND REAL ESTATE GROUP

SECTION APPROVALS

WATER ENGINEERING
TRAFFIC AND SIGNAL ENGINEERING
WASTEWATER ENGINEERING
STREET & BRIDGE ENGINEERING
STORMWATER ENGINEERING
CONSTRUCTION

OTHER DEPARTMENTS

PLANNING AND DEVELOPMENT
SPONSOR DEPARTMENT

CITY ENGINEER — DATE

DIRECTOR OF PUBLIC WORKS AND ENGINEERING — DATE

SUBMITTED:
SCALE: NONE
NONE
DATE: 12/4/98
SURVEY BY: N/A
F B NO:

DESIGNED BY: JMC
DRAWN BY: MBB
DWG. NO. : I1
SHT NO 17 of 159 SHTS
CITY DWG NO:
35001

ORIGINAL SCALE IN INCHES
FOR REDUCED PLANS
0 1 2 3

CADD DWG FILE NO : K:\BBI-AS\11.DWG
FILE DATE-OPERATOR:

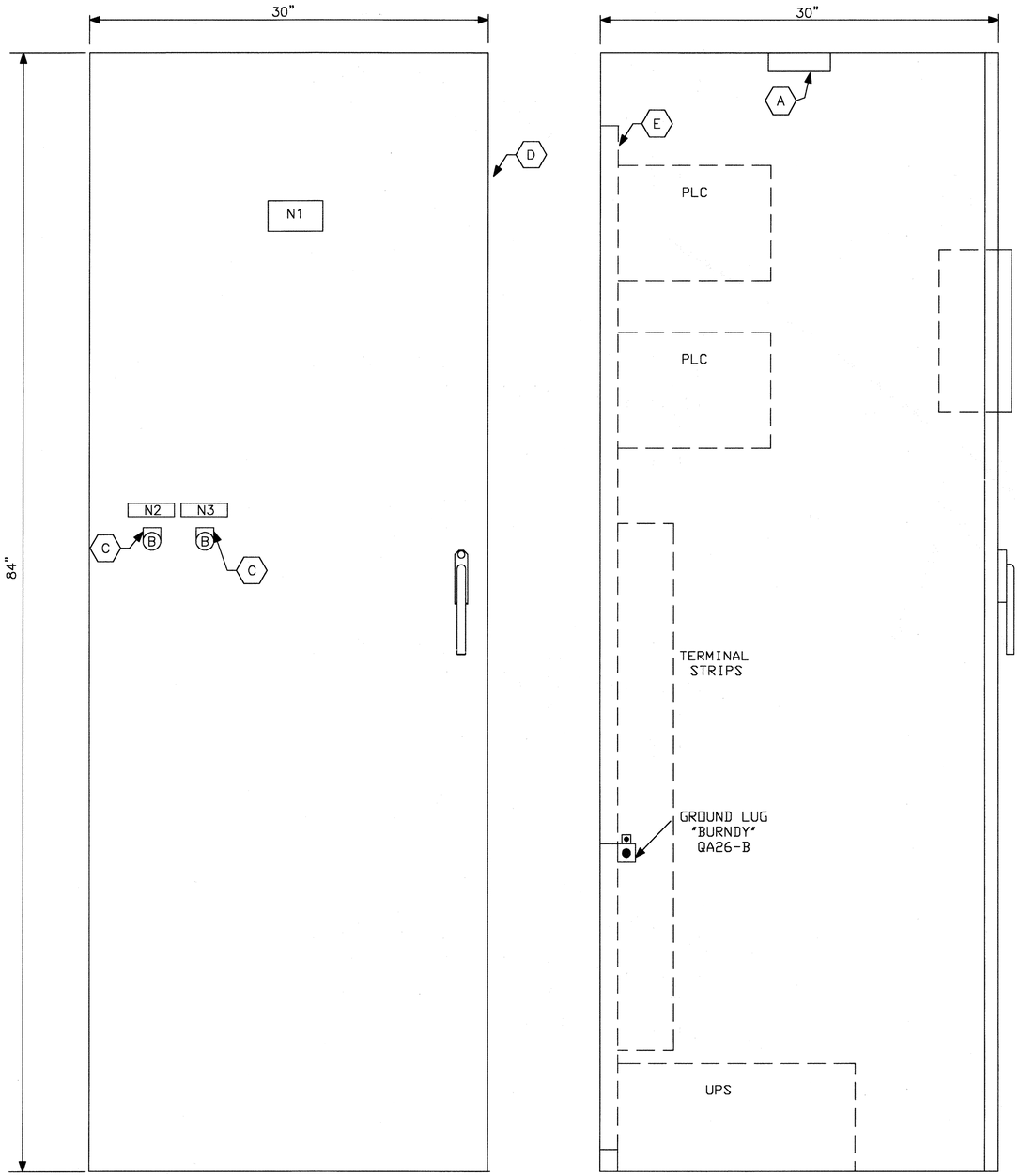

CONTROL PANEL FRONT ELEVATION

SIDE ELEVATION

NOTES:

1. NAMEPLATES SHALL BE MOUNTED TO PANELS USING STAINLESS STEEL HARDWARE.
2. NAMEPLATES SHALL BE BLACK LAMACOID WITH 1/4" WHITE LETTERS.
3. CABINET SHALL BE OPEN AT THE BOTTOM.

BILL OF MATERIALS

TAG	DESCRIPTION	QTY
A	24 WATT, SINGLE BULB, FLUORESCENT LIGHT	1
B	N. O. PUSHBUTTON, ALLEN-BRADLEY 800H-AR2D1 OR EQUAL	2
C	LEGEND PLATE, ALLEN-BRADLEY "EMERGENCY STOP" 800H-W373 OR EQUAL	2
D	NEMA 12 84x30x30 HOFFMAN CABINET 843030LP OR EQUAL (NOTE 3)	1
E	81x27 HOFFMAN PANEL A-84P30 OR EQUAL	1

NAMEPLATE SCHEDULE

ITEM	SIZE	LINE 1	LINE 2	LINE 3
N1	2"x5"	BIOSOLIDS	DRYERS	PANEL CP-100A
N2	1"x3-1/2"	EMERGENCY	STOP	DRYER #1
N3	1"x3-1/2"	EMERGENCY	STOP	DRYER #2

REV NO	DESCRIPTION	APP'D	DATE

SEAL

SEAL

STATE OF TEXAS
JESSE M. CARR III
R. 52288
REGISTERED
PROFESSIONAL ENGINEER
2-24-99

intellex CORPORATION
CONTROL SYSTEMS ENGINEERS
11230 WILCREST GREEN Houston, Texas 77042

CH2M HILL
7600 West Tidwell Road, Suite 400
Houston Tx 77040
713.462.0161

Binkley & Barfield, Inc.
Consulting Engineers
1710 Seamist Drive Houston, Texas 77008

ALMEDA SIMS
BIOSOLIDS
DRYER REHABILITATION

CIP NO 0298-05-3
FILE NO: 4289-4

CONTROL SYSTEM PANEL
BIOSOLIDS DRYERS
PANEL CP-100A FACE LAYOUT

CITY OF HOUSTON

DEPARTMENT OF PUBLIC WORKS AND ENGINEERING
ENGINEERING, CONSTRUCTION AND REAL ESTATE GROUP

SECTION APPROVALS

WATER ENGINEERING

TRAFFIC AND SIGNAL ENGINEERING

Hamid Jaffari 2-25-99
WASTEWATER ENGINEERING

STREET & BRIDGE ENGINEERING

STORMWATER ENGINEERING

Gerald Chan 3/2/99
CONSTRUCTION

2/25/99

OTHER DEPARTMENTS

PLANNING AND DEVELOPMENT

SPONSOR DEPARTMENT

CITY ENGINEER 3-2-99 DATE

DIRECTOR OF PUBLIC WORKS AND ENGINEERING 3/5/99 DATE

SUBMITTED:
SCALE: NONE
NONE
DATE:12/4/98
SURVEY BY: N/A
F B NO:

DESIGNED BY: JMC
DRAWN BY: MBB
DWG. NO. : 11
SHT NO 17 of 159 SHTS

CITY DWG NO:
35001

ORIGINAL SCALE IN INCHES
FOR REDUCED PLANS
0 1 2 3

CADD DWG FILE NO : K:\BBI-AS\V2.DWG
FILE DATE-OPERATOR:

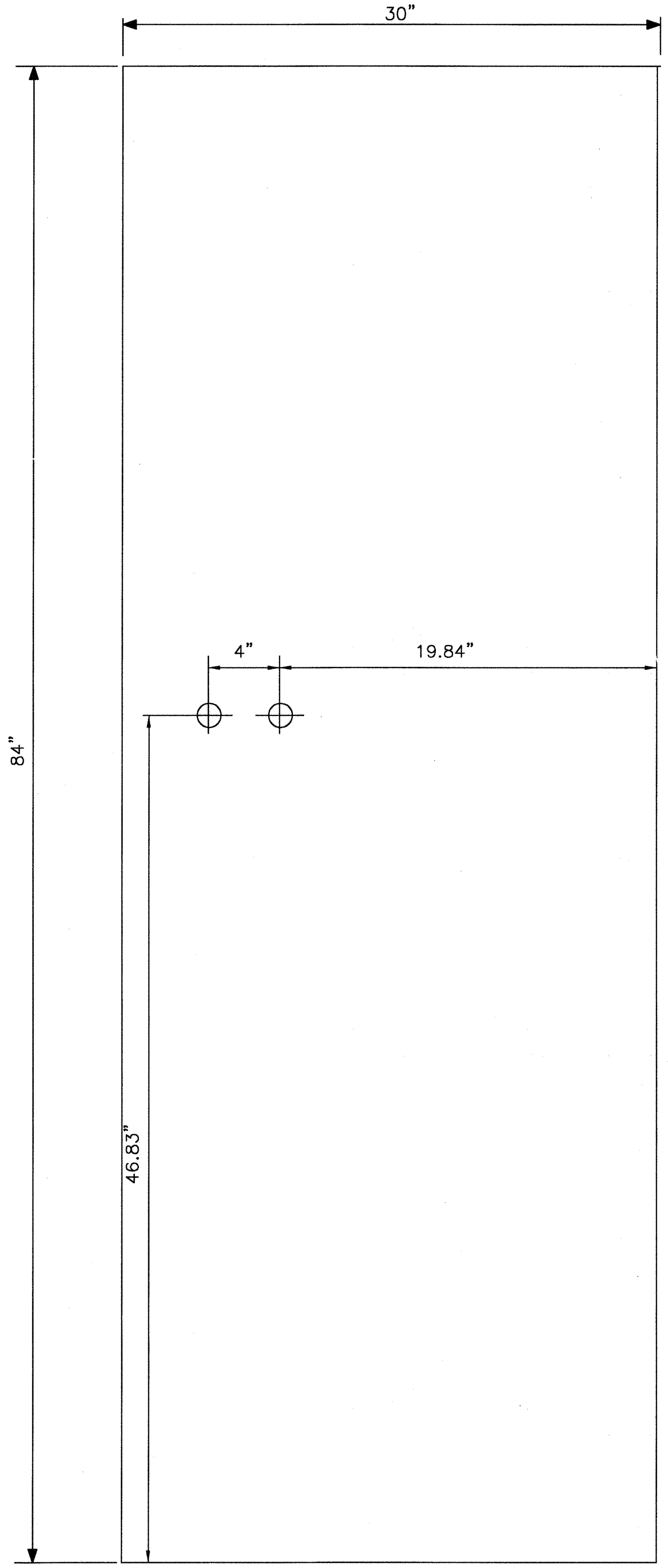

CONTROL PANEL FRONT ELEVATION

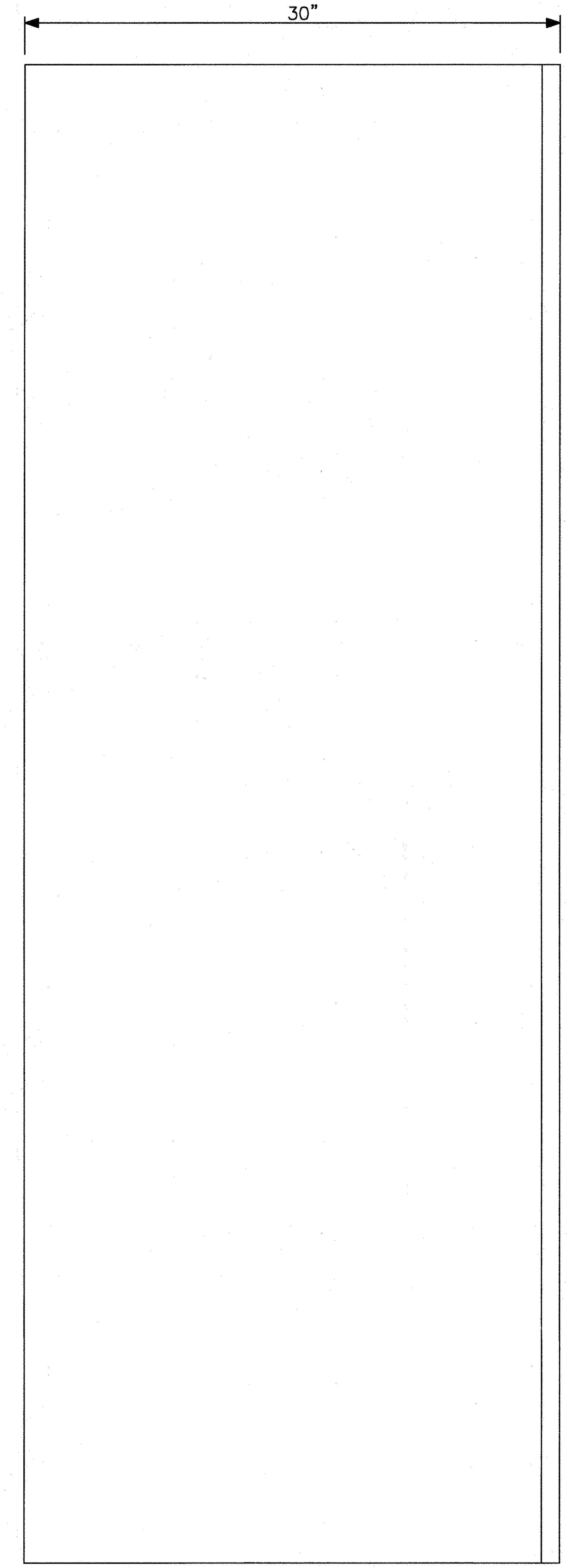

SIDE ELEVATION

NOTES:

1. ALL CUTOUTS FOR SWITCHES AND LIGHTS SHALL BE AS SHOWN IN THIS NOTE UNLESS OTHERWISE INDICATED ON THIS PANEL DRAWING.

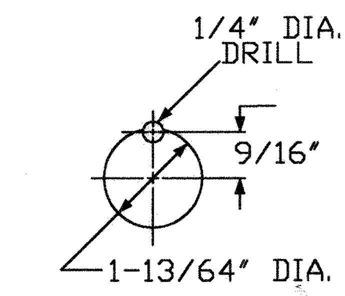

REV NO	DESCRIPTION	APP'D	DATE

SEAL: AS-BUILT 1/25/02

SEAL: STATE OF TEXAS — JESSE M. CARR III — 52288 — REGISTERED PROFESSIONAL ENGINEER — 2-24-99

intellex CORPORATION
CONTROL SYSTEMS ENGINEERS
11230 WILCREST GREEN Houston, Texas 77042

CH2M HILL
7600 West Tidwell Road, Suite 400
Houston Tx 77040
713.462.0161

Binkley & Barfield, Inc.
Consulting Engineers
1710 Seamist Drive Houston, Texas 77008

ALMEDA SIMS BIOSOLIDS DRYER REHABILITATION

CIP NO 0298-05-3
FILE NO: 4289-4

CONTROL SYSTEM PANEL
SLUDGE DRYERS
PANEL CP-100A FACE FABRICATION

CITY OF HOUSTON

DEPARTMENT OF PUBLIC WORKS AND ENGINEERING
ENGINEERING, CONSTRUCTION AND REAL ESTATE GROUP

SECTION APPROVALS

WATER ENGINEERING — TRAFFIC AND SIGNAL ENGINEERING
WASTEWATER ENGINEERING 2-25-99 — STREET & BRIDGE ENGINEERING
STORMWATER ENGINEERING — CONSTRUCTION 3/2/99
2/25/99

OTHER DEPARTMENTS

PLANNING AND DEVELOPMENT — SPONSOR DEPARTMENT

CITY ENGINEER — DATE 3-2-99
DIRECTOR OF PUBLIC WORKS AND ENGINEERING — DATE 3/5/99

SUBMITTED:	DESIGNED BY: JMC
SCALE: NONE NONE	DRAWN BY: MBB
DATE: 12/4/98	DWG. NO.: 12
SURVEY BY: N/A	SHT NO 18 of 159 SHTS
F B NO:	CITY DWG NO: 35001

ORIGINAL SCALE IN INCHES FOR REDUCED PLANS
0 1 2 3

CADD DWG FILE NO : K:\BBI-AS\13.DWG
FILE DATE:--OPERATOR:

8PT T/C	8PT T/C	8PT T/C	8PT T/C	8PT AI	8PT AI	8PT AI	8PT AO	16PT DI	16PT DI	16PT DI	16PT DO	16PT DO	16PT DO	16PT DO	TCP/IP
STATUS	STATUS	STATUS	STATUS	STATUS	STATUS	STATUS	STATUS								RJ45
AR AC	AR AC	AR AC	AR AC	AR AC	AR AC	AR AC	AR AC	AR AC	AR AC	AR AC	AR AC	AR AC	AR AC	AR AC	
A1 A5	A1 A5	A1 A5	A1 A5	A1 A5	A1 A5	A1 A5	A1 A5	A1 A5	A1 A5	A1 A5	A1 A5	A1 A5	A1 A5	A1 A5	
A2 A6	A2 A6	A2 A6	A2 A6	A2 A6	A2 A6	A2 A6	A2 A6	A2 A6	A2 A6	A2 A6	A2 A6	A2 A6	A2 A6	A2 A6	
A3 A7	A3 A7	A3 A7	A3 A7	A3 A7	A3 A7	A3 A7	A3 A7	A3 A7	A3 A7	A3 A7	A3 A7	A3 A7	A3 A7	A3 A7	
A4 A8	A4 A8	A4 A8	A4 A8	A4 A8	A4 A8	A4 A8	A4 A8	A4 A8	A4 A8	A4 A8	A4 A8	A4 A8	A4 A8	A4 A8	
BR BC	BR BC	BR BC	BR BC	BR BC	BR BC	BR BC	BR BC	BR BC	BR BC	BR BC	BR BC	BR BC	BR BC	BR BC	
B1 B5	B1 B5	B1 B5	B1 B5	B1 B5	B1 B5	B1 B5	B1 B5	B1 B5	B1 B5	B1 B5	B1 B5	B1 B5	B1 B5	B1 B5	
B2 B6	B2 B6	B2 B6	B2 B6	B2 B6	B2 B6	B2 B6	B2 B6	B2 B6	B2 B6	B2 B6	B2 B6	B2 B6	B2 B6	B2 B6	
B3 B7	B3 B7	B3 B7	B3 B7	B3 B7	B3 B7	B3 B7	B3 B7	B3 B7	B3 B7	B3 B7	B3 B7	B3 B7	B3 B7	B3 B7	
B4 B8	B4 B8	B4 B8	B4 B8	B4 B8	B4 B8	B4 B8	B4 B8	B4 B8	B4 B8	B4 B8	B4 B8	B4 B8	B4 B8	B4 B8	
CR CC	CR CC	CR CC	CR CC	CR CC	CR CC	CR CC	CR CC	CR CC	CR CC	CR CC	CR CC	CR CC	CR CC	CR CC	
C1 C5	C1 C5	C1 C5	C1 C5	C1 C5	C1 C5	C1 C5	C1 C5	C1 C5	C1 C5	C1 C5	C1 C5	C1 C5	C1 C5	C1 C5	
C2 C6	C2 C6	C2 C6	C2 C6	C2 C6	C2 C6	C2 C6	C2 C6	C2 C6	C2 C6	C2 C6	C2 C6	C2 C6	C2 C6	C2 C6	
C3 C7	C3 C7	C3 C7	C3 C7	C3 C7	C3 C7	C3 C7	C3 C7	C3 C7	C3 C7	C3 C7	C3 C7	C3 C7	C3 C7	C3 C7	
C4 C8	C4 C8	C4 C8	C4 C8	C4 C8	C4 C8	C4 C8	C4 C8	C4 C8	C4 C8	C4 C8	C4 C8	C4 C8	C4 C8	C4 C8	
DR DC	DR DC	DR DC	DR DC	DR DC	DR DC	DR DC	DR DC	DR DC	DR DC	DR DC	DR DC	DR DC	DR DC	DR DC	
D1 D5	D1 D5	D1 D5	D1 D5	D1 D5	D1 D5	D1 D5	D1 D5	D1 D5	D1 D5	D1 D5	D1 D5	D1 D5	D1 D5	D1 D5	
D2 D6	D2 D6	D2 D6	D2 D6	D2 D6	D2 D6	D2 D6	D2 D6	D2 D6	D2 D6	D2 D6	D2 D6	D2 D6	D2 D6	D2 D6	
D3 D7	D3 D7	D3 D7	D3 D7	D3 D7	D3 D7	D3 D7	D3 D7	D3 D7	D3 D7	D3 D7	D3 D7	D3 D7	D3 D7	D3 D7	
D4 D8	D4 D8	D4 D8	D4 D8	D4 D8	D4 D8	D4 D8	D4 D8	D4 D8	D4 D8	D4 D8	D4 D8	D4 D8	D4 D8	D4 D8	
SLOT 1	SLOT 2	SLOT 3	SLOT 4	SLOT 5	SLOT 6	SLOT 7	SLOT 8	SLOT 9	SLOT 10	SLOT 11	SLOT 12	SLOT 13	SLOT 14	SLOT 15	SLOT 16

PLC RACK LAYOUT

1 – TE1331	1 – TE1239	1 – TE2211	1 – TE2224	1 – IT1303	1 – PT1233	– PT2231	1 – SC1343	1 – YS1311	1 – YS1241	1 – ZS2320A	1 – CR1311A	1 – CR1230A	1 – CR2311A	1 – CR2230A
2 – TE1333	2 – TE1240	2 – TE2235	2 – TE2232	2 – IT1313	2 – IT2303	2 – PT2233	2 – TY1300	2 – YS1301	2 – YS1400	2 – ZS2320B	2 – CR1311B	2 – CR1230B	2 – CR2311B	2 – CR2230B
3 – TE1334	3 – TE1212	3 – TE2236	3 – SPARE	3 – ST1343	3 – IT2313	3 SPARE	3 – SC2343	3 – YS1321	3 – YS1361	3 – YS2241	3 – CR1301A	3 – SV1320	3 – CR2301A	3 – SV2320
4 – TE1211	4 – TE1224	4 – TE2237	4 – SPARE	4 – PT1332	4 – ST2343	4 - SPARE	4 – TY2300	4 – YS1341	4 – YS1371	4 – YS2400	4 – CR1301B	4 – CR1201A	4 – CR2301B	4 – CR2226A
5 – TE1235	5 – TE1232	5 – TE2238	5 – SPARE	5 – IT1353	5 – PT2332	5 – SPARE	5 – HC1210	5 – YS1351	5 – YS1226	5 – YS2361	5 – CR1321A	5 – CR1201B	5 – CR2321A	5 – CR2226B
6 – TE1236	6 – TE2331	6 – TE2239	6 – SPARE	6 – IT1223	6 – IT2353	6 – SPARE	6 – HC1225	6 – HS1000A	6 – YS1335	6 – YS2371	6 – CR1321B	6 – CR1226A	6 – CR2321B	6 – CR2335A
7 – TE1237	7 – TE2333	7 – TE2240	7 – SPARE	7 – PT1213	7 – IT2223	7 – SPARE	7 – HC2210	7 – YS1221	7 – YS2311	7 – YS2226	7 – CR1321C	7 – CR1226B	7 – CR2321C	7 – CR2335B
8 – TE1238	8 – TE2334	8 – TE2212	8 – SPARE	8 – PT1231	8 – PT2213	8 – SPARE	8 – HC2225	8 – YS1230	8 – YS2301	8 – YS2335	8 – CR1341A	8 – CR1335A	8 – CR2341A	8 – CR2241A
								9 – HS1230A	9 – YS2321	9 – SPARE	9 – CR1341B	9 – CR1335B	9 – CR2341B	9 – CR2241B
								10– SPARE	10– YS2341	10– SPARE	10– CR1351A	10– CR1241A	10– CR2351A	10– CR2361A
								11– PSL1001	11– YS2351	11– SPARE	11– CR1351B	11– CR1241B	11– CR2351B	11– CR2361B
								12– PSL1002	12– HS2000A	12– SPARE	12– SV1234	12– CR1361A	12– SV2234	12– CR2371A
								13– PSL1003	13– YS2221	13– SPARE	13– CR1221A	13– CR1361B	13– CR2221A	13– CR2371B
								14– ZS1320A	14– YS2230	14– SPARE	14– CR1221B	14– CR1371A	14– CR2221B	14– SPARE
								15– ZS1320B	15– HS2230A	15– SPARE	15– CR1400A	15– CR1371B	15– CR2400A	15– SPARE
								16– YS1201	16– SPARE	16– SPARE	16– CR1400B	16– SPARE	16– CR2400B	16– SPARE

PLC I/O CHANNEL ASSIGNMENTS

8PT DO	16PT DO	8PT AO	BLANK	BLANK	BLANK	BLANK	BLANK
		STATUS					
AR AC	AR AC	AR AC					
A1 A5	A1 A5	A1 A5					
A2 A6	A2 A6	A2 A6					
A3 A7	A3 A7	A3 A7					
A4 A8	A4 A8	A4 A8					
BR BC	BR BC	BR BC					
B1 B5	B1 B5	B1 B5					
B2 B6	B2 B6	B2 B6					
B3 B7	B3 B7	B3 B7					
B4 B8	B4 B8	B4 B8					
CR CC	CR CC	CR CC					
C1 C5	C1 C5	C1 C5					
C2 C6	C2 C6	C2 C6					
C3 C7	C3 C7	C3 C7					
C4 C8	C4 C8	C4 C8					
DR DC	DR DC	DR DC					
D1 D5	D1 D5	D1 D5					
D2 D6	D2 D6	D2 D6					
D3 D7	D3 D7	D3 D7					
D4 D8	D4 D8	D4 D8					
SLOT 21	SLOT 22	SLOT 23	SLOT 24	SLOT 25	SLOT 26	SLOT 27	SLOT 28

PLC RACK LAYOUT

1 – YI1238A	1 – SPARE	1 – SPARE
2 – YI1238B	2 – SPARE	2 – SPARE
3 – YI1371	3 – SPARE	3 – SPARE
4 – YI2238A	4 – SPARE	4 – SPARE
5 – YI2238B	5 – SPARE	5 – SPARE
6 – YI2371	6 – SPARE	6 – SPARE
7 – SPARE	7 – SPARE	7 – SPARE
8 – SPARE	8 – SPARE	8 – SPARE
	9 – SPARE	
	10– SPARE	
	11– SPARE	
	12– SPARE	
	13– SPARE	
	14– SPARE	
	15– SPARE	
	16– SPARE	

PLC I/O CHANNEL ASSIGNMENTS

ORIGINAL SCALE IN INCHES FOR REDUCED PLANS
0 1 2 3

REV NO	DESCRIPTION	APP'D	DATE

SEAL

AS-BUILT
Darrell Razz
1/25/02

SEAL

STATE OF TEXAS
JESSE M. CARR III
68288
REGISTERED
PROFESSIONAL ENGINEER
2-24-99

intellex CORPORATION
CONTROL SYSTEMS ENGINEERS
11230 WILCREST GREEN Houston, Texas 77042

CH2M HILL
7600 West Tidwell Road, Suite 400
Houston Tx 77040
713.462.0161

Binkley & Barfield, Inc.
Consulting Engineers
1710 Seamist Drive Houston, Texas 77008

ALMEDA SIMS
BIOSOLIDS
DRYER REHABILITATION

CIP NO 0298-05-3
FILE NO: 4289-4

CONTROL SYSTEM PANEL
BIOSOLIDS DRYERS
INPUT/OUTPUT ASSIGNMENTS

CITY OF HOUSTON
DEPARTMENT OF PUBLIC WORKS AND ENGINEERING
ENGINEERING, CONSTRUCTION AND REAL ESTATE GROUP

SECTION APPROVALS

WATER ENGINEERING

TRAFFIC AND SIGNAL ENGINEERING

WASTEWATER ENGINEERING 2-25-99

STREET & BRIDGE ENGINEERING

STORMWATER ENGINEERING

CONSTRUCTION 3/2/99

2/25/99

OTHER DEPARTMENTS

PLANNING AND DEVELOPMENT

SPONSOR DEPARTMENT

CITY ENGINEER 3-2-99 DATE

DIRECTOR OF PUBLIC WORKS AND ENGINEERING 3/3/99 DATE

SUBMITTED:
SCALE: NONE
NONE
DATE:12/4/98
SURVEY BY: N/A
F B NO:

DESIGNED BY: JMC
DRAWN BY: MBB
DWG. NO. : 13
SHT NO 19 of 159 SHTS
CITY DWG NO:
35001

CADD DWG FILE NO : K:\BBI-AS\I4.DWG

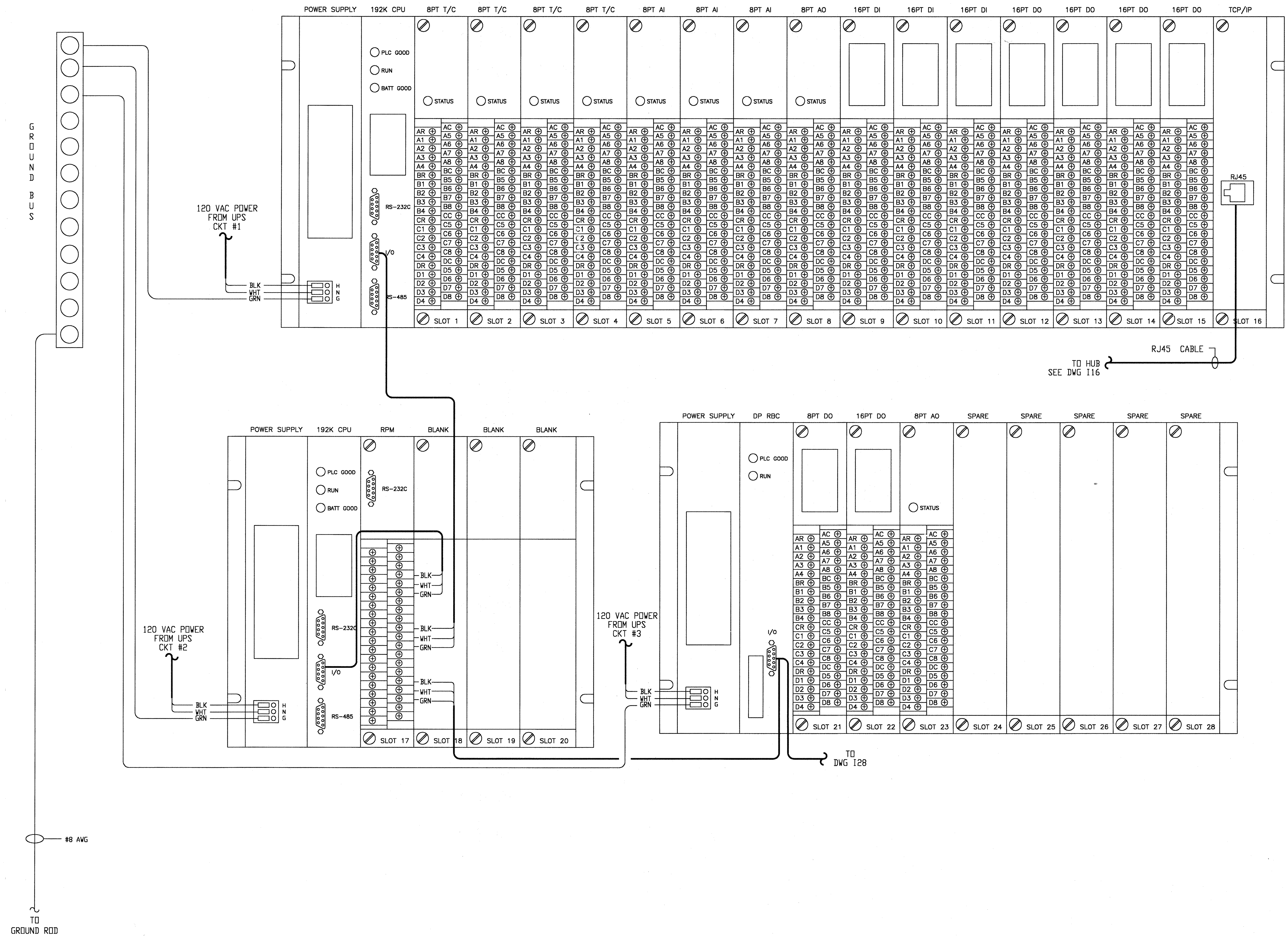

ORIGINAL SCALE IN INCHES FOR REDUCED PLANS

0 1 2 3

REV NO	DESCRIPTION	APP'D	DATE

SEAL

AS-BUILT

1/25/02

SEAL

STATE OF TEXAS
JESSE M. CARR III
52288
REGISTERED PROFESSIONAL ENGINEER
2-24-99

intellex CORPORATION
CONTROL SYSTEMS ENGINEERS
11230 WILCREST GREEN Houston, Texas 77042

CH2M HILL
7600 West Tidwell Road, Suite 400
Houston Tx 77040
713.462.0161

Binkley & Barfield, Inc.
Consulting Engineers
1710 Seamist Drive Houston, Texas 77008

ALMEDA SIMS BIOSOLIDS DRYER REHABILITATION

CIP NO 0298-05-3
FILE NO: 4289-4

CONTROL SYSTEM PANEL BIOSOLIDS DRYERS POWER & COMMUNICATIONS WIRING

CITY OF HOUSTON

DEPARTMENT OF PUBLIC WORKS AND ENGINEERING
ENGINEERING, CONSTRUCTION AND REAL ESTATE GROUP

SECTION APPROVALS

WATER ENGINEERING
TRAFFIC AND SIGNAL ENGINEERING

2-25-99
WASTEWATER ENGINEERING
STREET & BRIDGE ENGINEERING

3/2/99
STORMWATER ENGINEERING
CONSTRUCTION

2/25/99

OTHER DEPARTMENTS

PLANNING AND DEVELOPMENT
SPONSOR DEPARTMENT

CITY ENGINEER — DATE 3-2-99
DIRECTOR OF PUBLIC WORKS AND ENGINEERING — DATE 3/5/99

SUBMITTED:
SCALE: NONE
NONE
DATE:12/4/98
SURVEY BY: N/A
F B NO:

DESIGNED BY: JMC
DRAWN BY: MBB
DWG. NO. : I4
SHT NO 20 of 159 SHTS

CITY DWG NO:
35001

CADD DWG FILE NO : K:\BBI-AS\15.DWG
FILE DATE-OPERATOR:

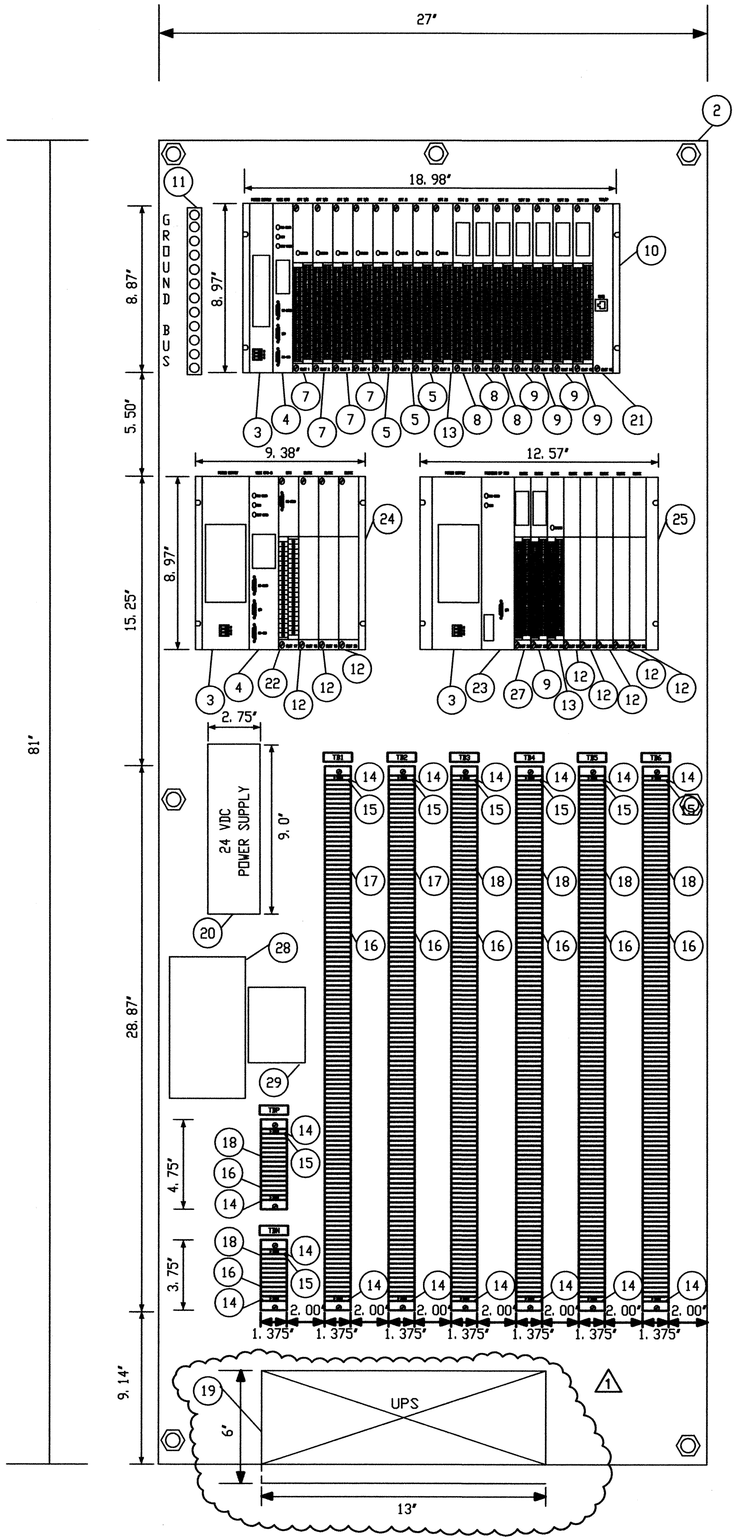

ORIGINAL SCALE IN INCHES FOR REDUCED PLANS
0 1 2 3

BILL OF MATERIAL

TAG	DESCRIPTION	QTY
1	NEMA 12 84x30x30 HOFFMAN JUNCTION BOX A-843030LP OR EQUAL	1
2	81x27 HOFFMAN PANEL A-84P30 OR EQUAL	1
3	SIEMENS 505-6660 AC POWER SUPPLY	3
4	SIEMENS CPU 545-1104	2
5	SIEMENS 505-6108-A 8 CH. ANALOG IN MODULE	3
6A	CABLE - 505-1104 PROFIBUS DP CABLE	3
6B	CABLE - RS-485 COMMUNICATIONS CABLE	1
7	SIEMENS 505-7028 8 CH. THERMOCOUPLE MODULE TYPE K	4
8	SIEMENS 505-4216-A 16 CH. 120VAC DIGITAL IN MODULE	6
9	SIEMENS 505-4916 120VAC RELAY FORM A DIGITAL OUT MODULE	3
10	SIEMENS 505-6516 TI505 BASE 16 SLOT	1
11	GROUND BUS	1
12	SIEMENS 505-4000 BLANK SLOT COVER	9
13	SIEMENS 505-6208-A 8 CH. ANALOG OUT MODULE	1
14	END TERMINAL BLOCK PHOENIX CONTACT E/UK OR EQUAL	14
15	END TERMINAL PLATE PHOENIX CONTACT D-UK2.5 OR EQUAL	7
16	ALUMINUM PERFORATED MOUNTING RAIL PHOENIX CONTACT NS35/7.5 OR EQUAL	3
17	TERMINAL BLOCK WITH FUSE PHOENIX CONTACT UK5-HESI OR EQUAL	169
18	TERMINAL BLOCK PHOENIX CONTACT UK2.5 B OR EQUAL	261
19	UNINTERRUPTABLE POWER SUPPLY (UPS) SEE SECTION 13440 FOR REQUIREMENTS	1
20	PHOENIX CONTACT CM125-PS POWER SUPPLY 120 VAC/24 VDC/5 AMPS	1
21	SIEMENS 505-CP2572 TCP/IP COMMUNICATIONS MODULE	1
22	CTI 2541 REDUNDANT PROCESSOR MANAGER MODULE	1
23	SIEMENS 505-6870 PROFIBUS DP REMOTE BASE CONTROLLER	1
24	SIEMENS 505-6504 TI505 BASE 4 SLOT	1
25	SIEMENS 505-6508 TI505 BASE 8 SLOT	1
26	SIEMENS 505-CP2572 TCP/IP COMMUNICATIONS MODULE	1
27	SIEMENS 505-4908 RELAY OUTPUT FORM C ISOLATED	1
28	RJ45 TO AUI REPEATER	1
29	AUI TO THICK ETHERNET "COAX" TRANSCEIVER	1

1

NOTE:

1. TERMINAL BLOCK NAMEPLATES SHALL BE 0.5" x 1" BLACK LAMACOID WITH 0.25" WHITE LETTERS ENGRAVED AS INDICATED ON THIS DRAWING.

REV NO	DESCRIPTION	APP'D	DATE
1	AS BUILT DRAWING	DJR	12/01

SEAL

STATE OF TEXAS
DAVID J. ROSS
68267
REGISTERED
PROFESSIONAL ENGINEER

SEAL

AS BUILT
Darrell Ross
1/25/02

intellex CORPORATION
CONTROL SYSTEMS ENGINEERS
11230 WILCREST GREEN Houston, Texas 77042

CH2M HILL
7600 West Tidwell Road, Suite 400
Houston Tx 77040
713.462.0161

Binkley & Barfield, Inc.
Consulting Engineers
1710 Seamist Drive Houston, Texas 77008

ALMEDA SIMS BIOSOLIDS DRYER REHABILITATION

CIP NO 0298-05-3
FILE NO: 4289-4

CONTROL SYSTEM PANEL BIOSOLIDS DRYERS PANEL CP-100A

CITY OF HOUSTON

DEPARTMENT OF PUBLIC WORKS AND ENGINEERING
ENGINEERING, CONSTRUCTION AND REAL ESTATE GROUP

SECTION APPROVALS

WATER ENGINEERING
TRAFFIC AND SIGNAL ENGINEERING
WASTEWATER ENGINEERING
STREET & BRIDGE ENGINEERING
STORMWATER ENGINEERING
CONSTRUCTION

OTHER DEPARTMENTS

PLANNING AND DEVELOPMENT
SPONSOR DEPARTMENT

CITY ENGINEER — DATE
DIRECTOR OF PUBLIC WORKS AND ENGINEERING — DATE

SUBMITTED:
SCALE: NONE
NONE
DATE: 12/4/98
SURVEY BY: N/A
F B NO:

DESIGNED BY: JMC
DRAWN BY: MBB
DWG. NO. : 15
SHT NO 21 of 159 SHTS

CITY DWG NO:
35001

CADD DWG FILE NO : K:\BBI-AS\15.DWG
FILE DATE--OPERATOR:

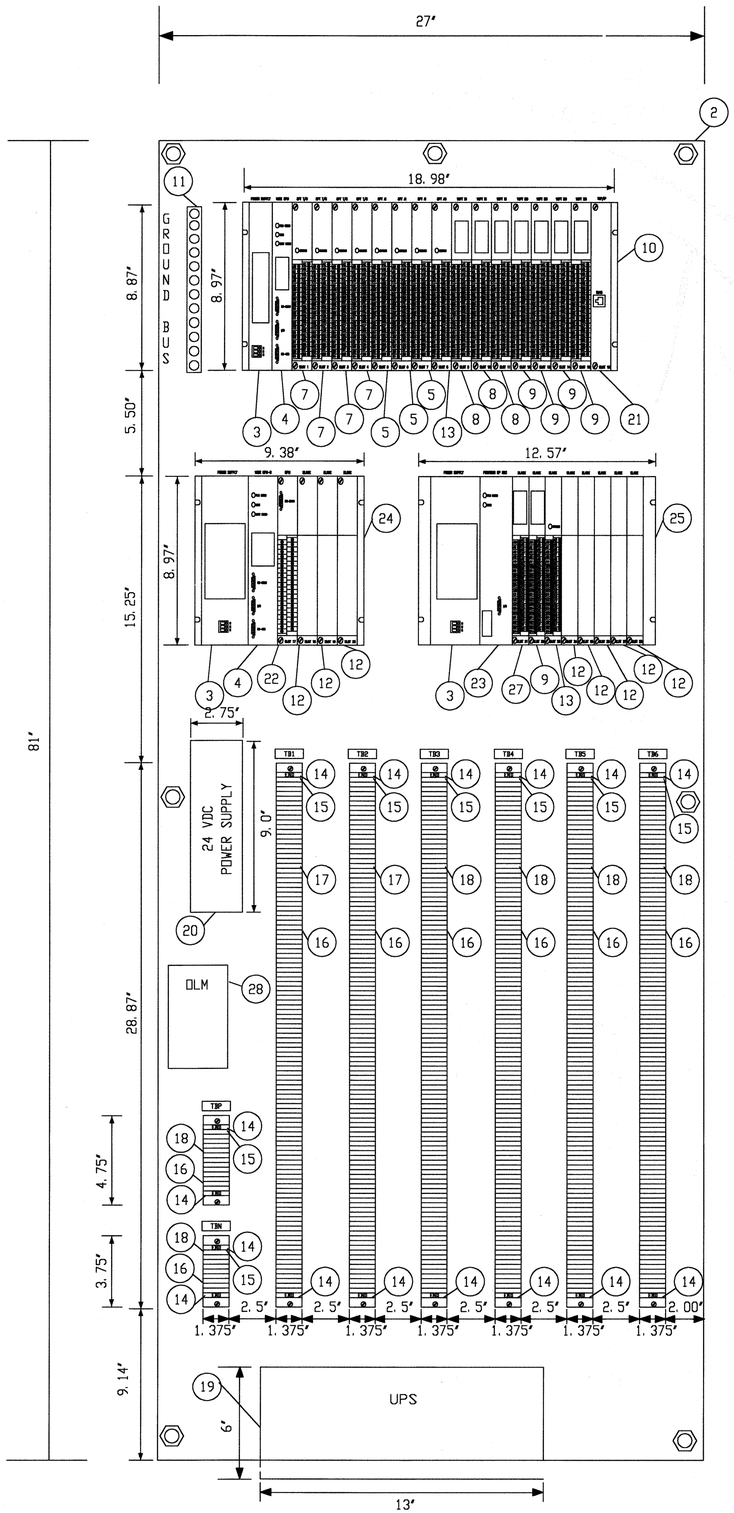

ORIGINAL SCALE IN INCHES FOR REDUCED PLANS
0 1 2 3

BILL OF MATERIAL

TAG	DESCRIPTION	QTY
1	NEMA 12 84x30x30 HOFFMAN JUNCTION BOX A-843030LP OR EQUAL	1
2	81x27 HOFFMAN PANEL A-84P30 OR EQUAL	1
3	SIEMENS 505-6660 AC POWER SUPPLY	3
4	SIEMENS CPU 545-1104	2
5	SIEMENS 505-6108-A 8 CH. ANALOG IN MODULE	3
6A	CABLE - 505-1104 PROFIBUS DP CABLE	3
6B	CABLE - RS-485 COMMUNICATIONS CABLE	1
7	SIEMENS 505-7028 8 CH. THERMOCOUPLE MODULE TYPE K	4
8	SIEMENS 505-4216-A 16 CH. 120VAC DIGITAL IN MODULE	6
9	SIEMENS 505-4916 120VAC RELAY FORM A DIGITAL OUT MODULE	3
10	SIEMENS 505-6516 TI505 BASE 16 SLOT	1
11	GROUND BUS	1
12	SIEMENS 505-4000 BLANK SLOT COVER	9
13	SIEMENS 505-6208-A 8 CH. ANALOG OUT MODULE	1
14	END TERMINAL BLOCK PHOENIX CONTACT E/UK OR EQUAL	14
15	END TERMINAL PLATE PHOENIX CONTACT D-UK2.5 OR EQUAL	7
16	ALUMINUM PERFORATED MOUNTING RAIL PHOENIX CONTACT NS35/7.5 OR EQUAL	3
17	TERMINAL BLOCK WITH FUSE PHOENIX CONTACT UK5-HESI OR EQUAL	169
18	TERMINAL BLOCK PHOENIX CONTACT UK2.5 B OR EQUAL	261
19	UNINTERRUPTABLE POWER SUPPLY (UPS) SEE SECTION 13440 FOR REQUIREMENTS	1
20	PHOENIX CONTACT CM125-PS POWER SUPPLY 120 VAC/24 VDC/5 AMPS	1
21	SIEMENS 505-CP2572 TCP/IP COMMUNICATIONS MODULE	1
22	CTI 2541 REDUNDANT PROCESSOR MANAGER MODULE	1
23	SIEMENS 505-6870 PROFIBUS DP REMOTE BASE CONTROLLER	1
24	SIEMENS 505-6504 TI505 BASE 4 SLOT	1
25	SIEMENS 505-6508 TI505 BASE 8 SLOT	1
26	SIEMENS 505-CP2572 TCP/IP COMMUNICATIONS MODULE	1
27	SIEMENS 505-4908 RELAY OUTPUT FORM C ISOLATED	1
28	SIEMENS OLM INDUSTRIAL ETHERNET MODEL 6GK11024AA00	1

NOTE:

1. TERMINAL BLOCK NAMEPLATES SHALL BE 0.5" x 1" BLACK LAMACOID WITH 0.25" WHITE LETTERS ENGRAVED AS INDICATED ON THIS DRAWING.

REV NO	DESCRIPTION	APP'D	DATE

SEAL

SEAL
STATE OF TEXAS
JESSE M. CARR III
68288
REGISTERED
PROFESSIONAL ENGINEER
2-24-99

intellex CORPORATION
CONTROL SYSTEMS ENGINEERS
11230 WILCREST GREEN Houston, Texas 77042

CH2M HILL
7600 West Tidwell Road, Suite 400
Houston Tx 77040
713.462.0161

Binkley & Barfield, Inc.
Consulting Engineers
1710 Seamist Drive Houston, Texas 77008

ALMEDA SIMS
BIOSOLIDS
DRYER REHABILITATION

CIP NO 0298-05-3
FILE NO: 4289-4

CONTROL SYSTEM PANEL
BIOSOLIDS DRYERS
PANEL CP-100A

CITY OF HOUSTON
DEPARTMENT OF PUBLIC WORKS AND ENGINEERING
ENGINEERING, CONSTRUCTION AND REAL ESTATE GROUP

SECTION APPROVALS

WATER ENGINEERING
TRAFFIC AND SIGNAL ENGINEERING
WASTEWATER ENGINEERING 2-26-99
STREET & BRIDGE ENGINEERING
STORMWATER ENGINEERING
CONSTRUCTION
2/25/99

OTHER DEPARTMENTS

PLANNING AND DEVELOPMENT
SPONSOR DEPARTMENT
CITY ENGINEER 3-2-99 DATE
DIRECTOR OF PUBLIC WORKS AND ENGINEERING 3/5/99 DATE

SUBMITTED:
SCALE: NONE
NONE
DATE:12/4/98
SURVEY BY: N/A
F B NO:

DESIGNED BY: JMC
DRAWN BY: MBB
DWG. NO. : 15
SHT NO 21 of 159 SHTS
CITY DWG NO:
35001

CADD DWG FILE NO : K:\BBI-AS\I6.DWG
FILE DATE--OPERATOR:

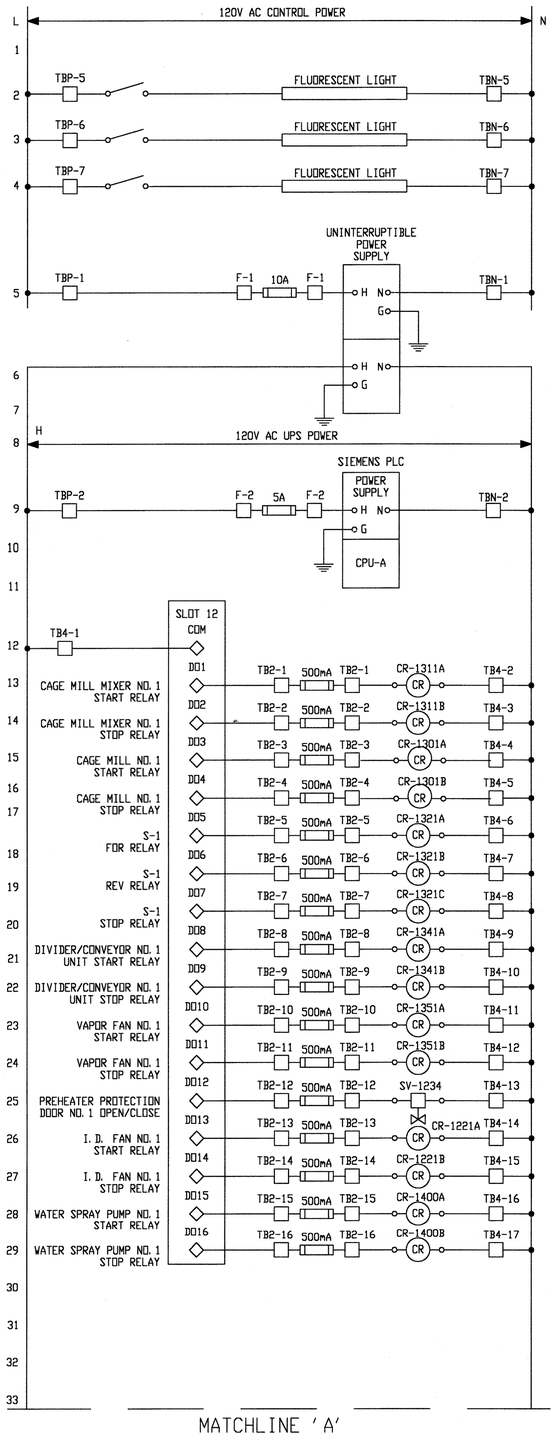

MATCHLINE 'A'

MATCHLINE 'A'

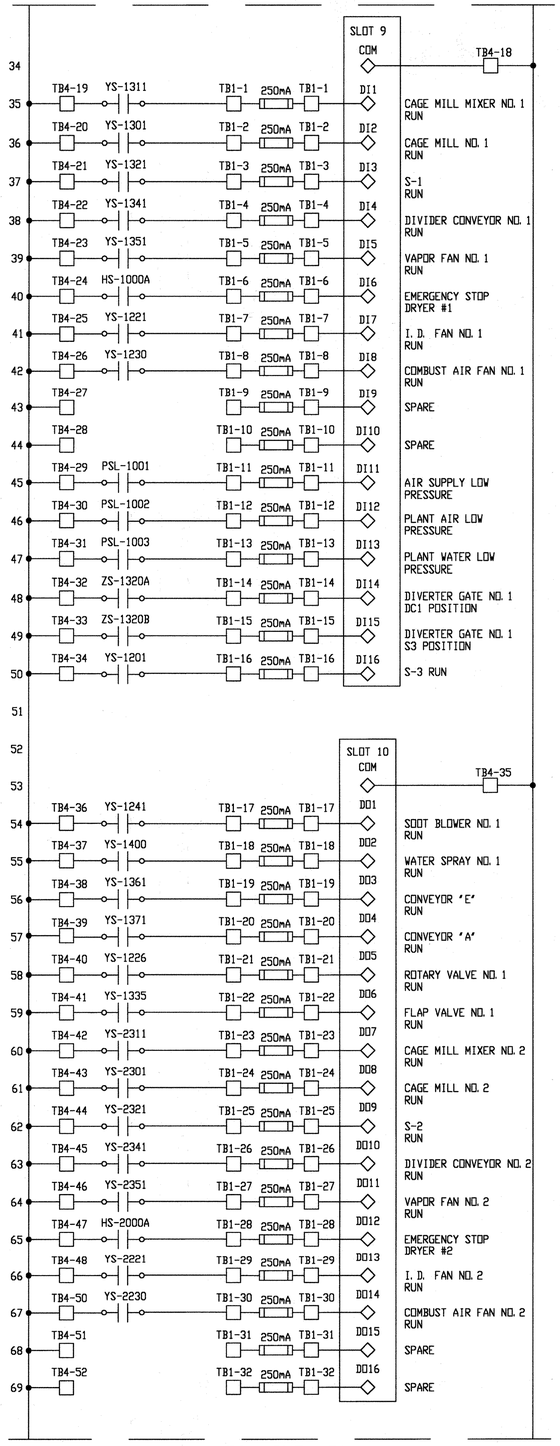

MATCHLINE 'B'

MATCHLINE 'B'

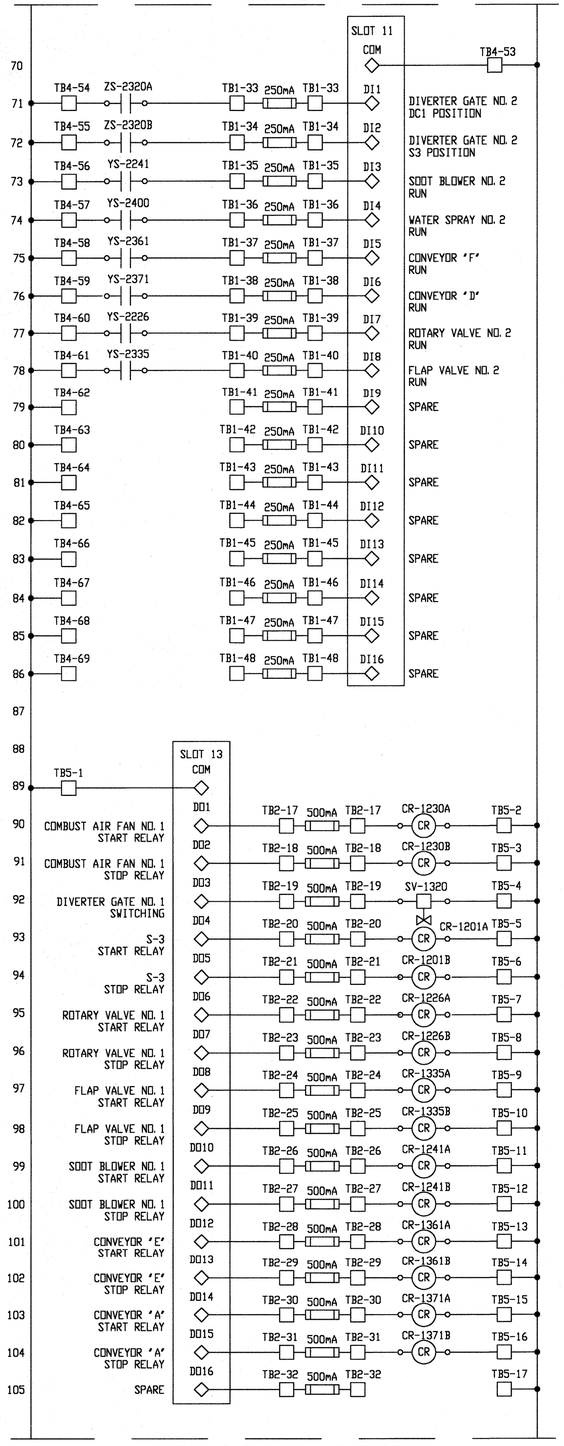

MATCHLINE 'C' - DWG I7

ORIGINAL SCALE IN INCHES
FOR REDUCED PLANS
0 1 2 3

REV NO	DESCRIPTION	APP'D	DATE

SEAL

AS-BUILT
12/15/98

SEAL

STATE OF TEXAS
JESSE M. CARR III
52288
REGISTERED
PROFESSIONAL
ENGINEER
2-24-99

intellex CORPORATION
CONTROL SYSTEMS ENGINEERS
11230 WILCREST GREEN Houston, Texas 77042

CH2M HILL
7600 West Tidwell Road, Suite 400
Houston Tx 77040
713.462.0161

Binkley & Barfield, Inc.
Consulting Engineers
1710 Seamist Drive Houston, Texas 77008

ALMEDA SIMS
BIOSOLIDS
DRYER REHABILITATION

CIP NO 0298-05-3
FILE NO: 4289-4

CONTROL SYSTEM PANEL
BIOSOLIDS DRYERS
INPUT/OUTPUT WIRING

CITY OF HOUSTON
DEPARTMENT OF PUBLIC WORKS AND ENGINEERING
ENGINEERING, CONSTRUCTION AND REAL ESTATE GROUP

SECTION APPROVALS

WATER ENGINEERING

TRAFFIC AND SIGNAL ENGINEERING

Hamid Youssefi 2-25-99
WASTEWATER ENGINEERING

STREET & BRIDGE ENGINEERING

STORMWATER ENGINEERING

Gustavo Cuevas 3/1/99
CONSTRUCTION

Zia Yazdani 2/25/99

OTHER DEPARTMENTS

PLANNING AND DEVELOPMENT

SPONSOR DEPARTMENT

Herbert A. Lunn 3-2-99
CITY ENGINEER DATE

DIRECTOR OF PUBLIC WORKS AND ENGINEERING DATE 3/3/99

SUBMITTED:
SCALE: NONE
NONE
DATE: 12/4/98
SURVEY BY: N/A
F B NO:

DESIGNED BY: JMC
DRAWN BY: MBB
DWG. NO. : I6
SHT NO 22 of 159 SHTS

CITY DWG NO:
35001

CADD DWG FILE NO : K:\BBI-AS\I7.DWG
FILE DATE-OPERATOR:

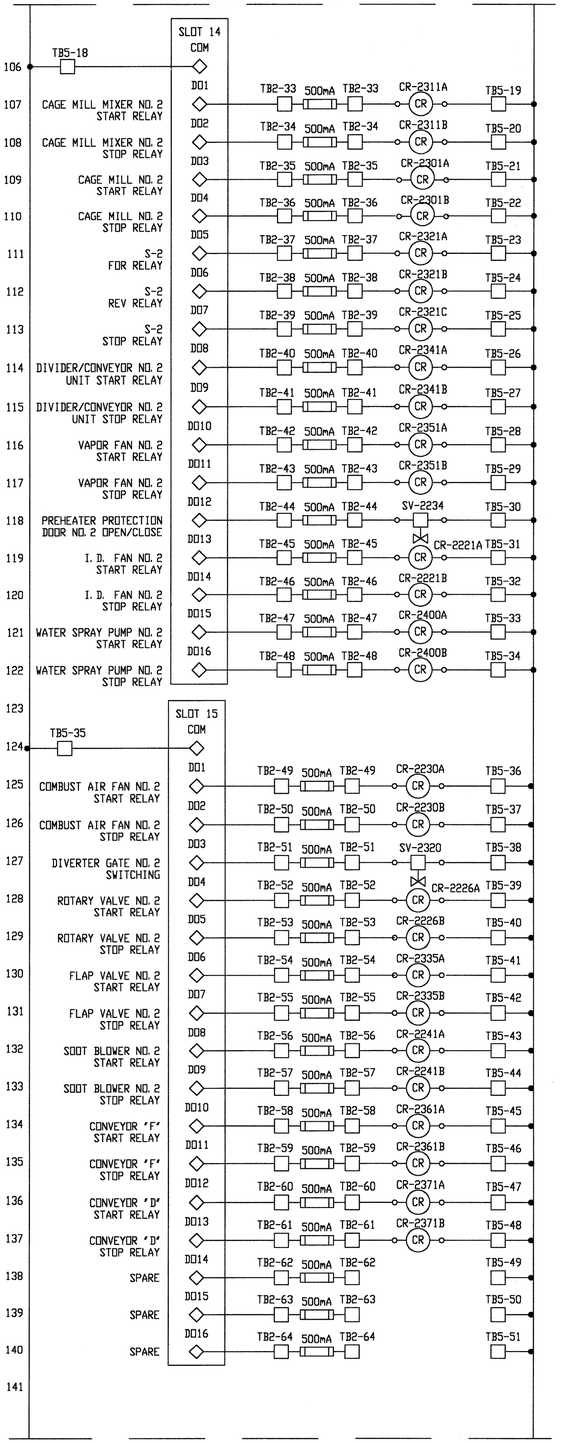

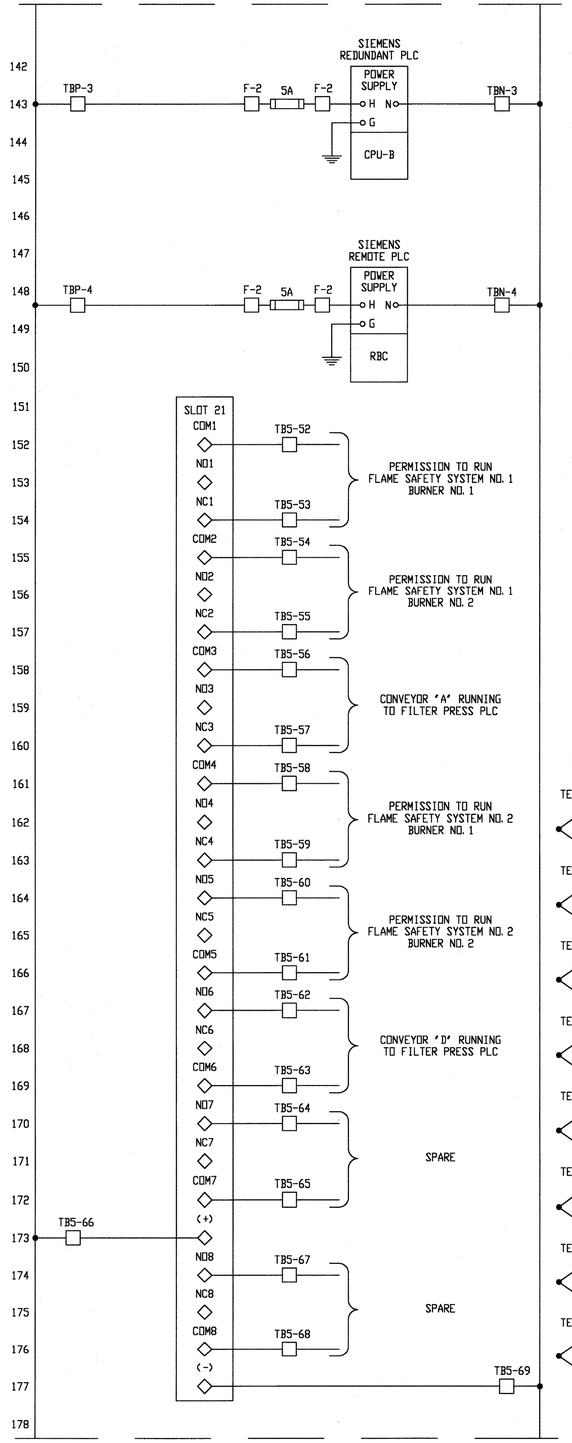

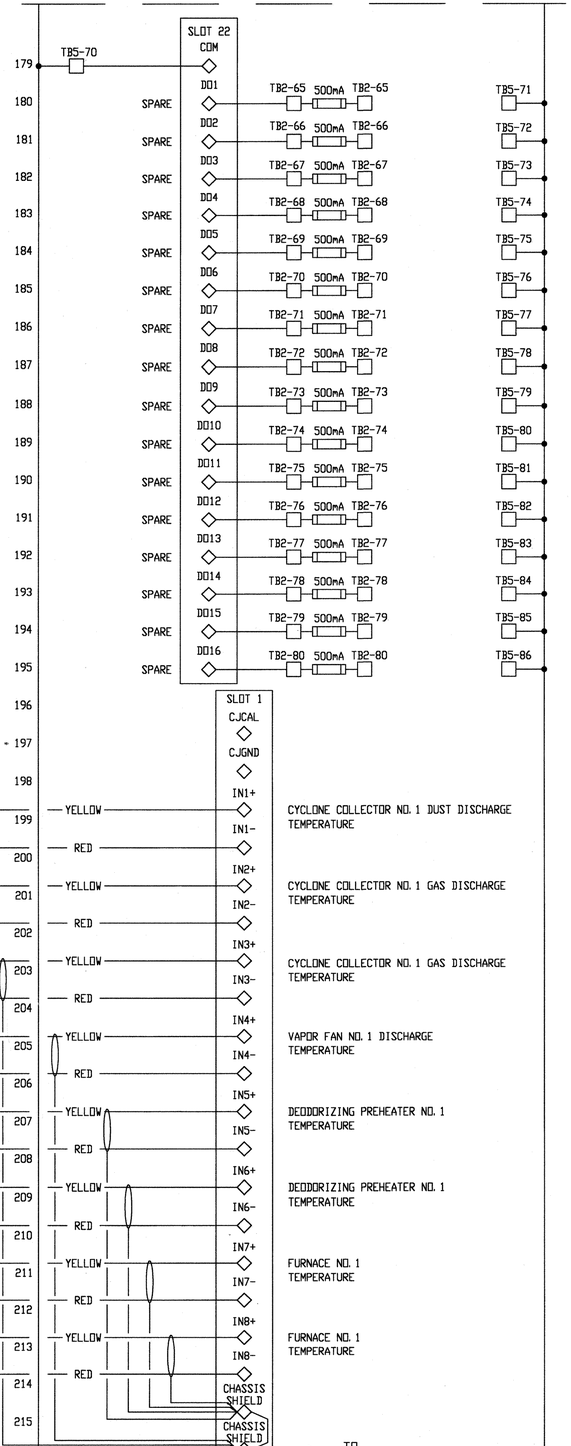

ORIGINAL SCALE IN INCHES
FOR REDUCED PLANS
0 1 2 3

REV NO	DESCRIPTION	APP'D	DATE

SEAL

AS-BUILT
Darrell Ross
1/25/02

SEAL

STATE OF TEXAS
JESSE M. CARR III
52288
REGISTERED
PROFESSIONAL
ENGINEER
2-26-99

intellex CORPORATION
CONTROL SYSTEMS ENGINEERS
11230 WILCREST GREEN Houston, Texas 77042

CH2M HILL
7600 West Tidwell Road, Suite 400
Houston Tx 77040
713.462.0161

Binkley & Barfield, Inc.
Consulting Engineers
1710 Seamist Drive Houston, Texas 77008

ALMEDA SIMS
BIOSOLIDS DRYER REHABILITATION

CIP NO 0298-05-3
FILE NO: 4289-4

CONTROL SYSTEM PANEL BIOSOLIDS DRYERS INPUT/OUTPUT WIRING

CITY OF HOUSTON

DEPARTMENT OF PUBLIC WORKS AND ENGINEERING
ENGINEERING, CONSTRUCTION AND REAL ESTATE GROUP

SECTION APPROVALS

WATER ENGINEERING

TRAFFIC AND SIGNAL ENGINEERING

Hamid Louiseb 2-25-99
WASTEWATER ENGINEERING

STREET & BRIDGE ENGINEERING

STORMWATER ENGINEERING

Anthony Price 3/1/99
CONSTRUCTION

Zaid Mahmoud 2/26/99

OTHER DEPARTMENTS

PLANNING AND DEVELOPMENT

SPONSOR DEPARTMENT

Herbert Lum 3-2-99
CITY ENGINEER DATE

DIRECTOR OF PUBLIC WORKS AND ENGINEERING 3/2/99 DATE

SUBMITTED:
SCALE: NONE
NONE
DATE:12/4/98
SURVEY BY: N/A
F B NO:

DESIGNED BY: JMC
DRAWN BY: MBB
DWG. NO. : I7
SHT NO 23 of 159 SHTS

CITY DWG NO:
35001

CADD DWG FILE NO : K:\BBI-AS\I8.DWG
FILE DATE-OPERATOR:

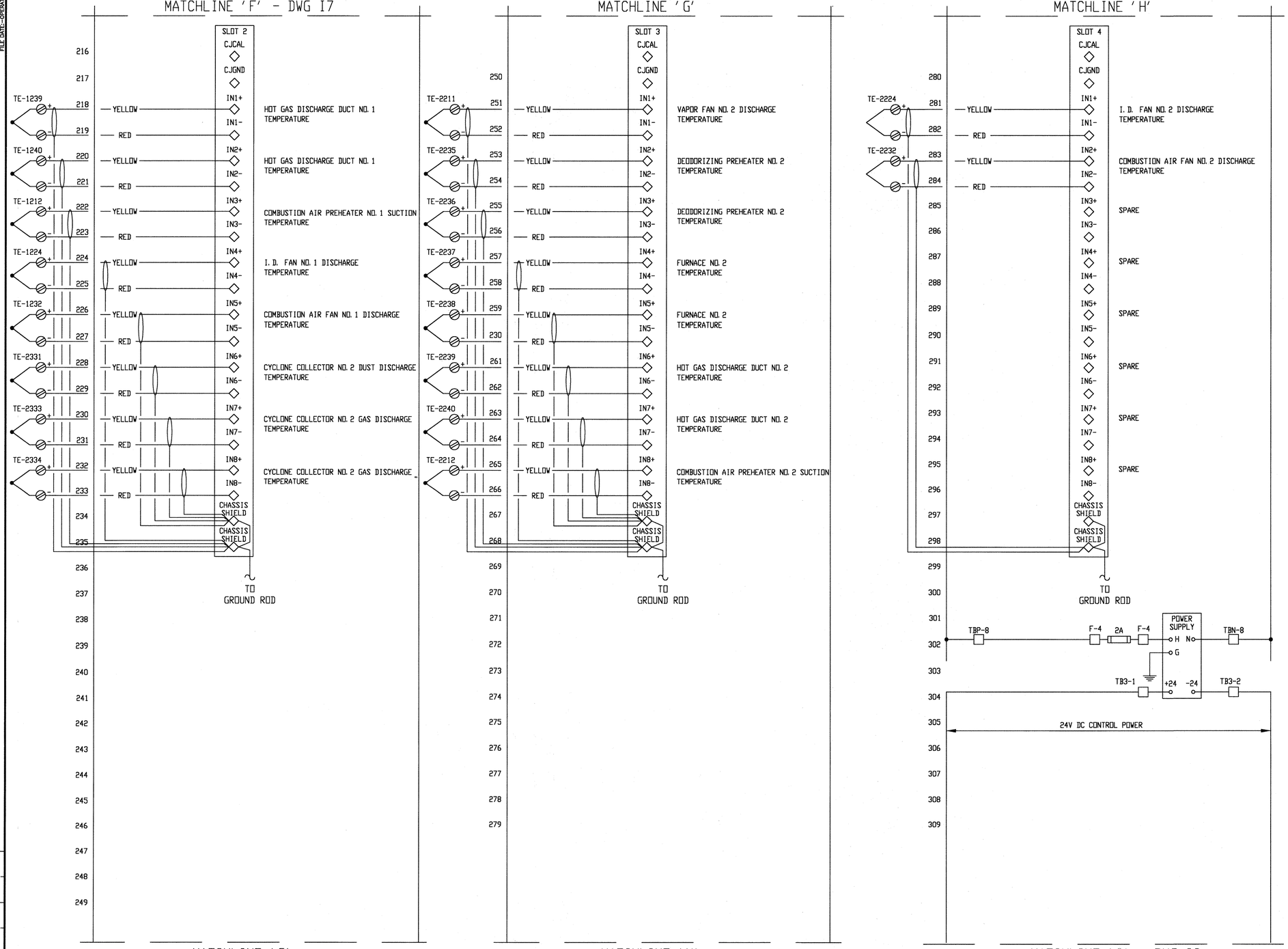

REV NO	DESCRIPTION	APP'D	DATE

SEAL

AS-BUILT
Dan Aben
1/25/02

SEAL

STATE OF TEXAS
JESSE M. CARR III
52288
REGISTERED
PROFESSIONAL
ENGINEER
2-24-99

intellex CORPORATION
CONTROL SYSTEMS ENGINEERS
11230 WILCREST GREEN Houston, Texas 77042

CH2M HILL
7600 West Tidwell Road, Suite 400
Houston Tx 77040
713.462.0161

Binkley & Barfield, Inc.
Consulting Engineers
1710 Seamist Drive Houston, Texas 77008

ALMEDA SIMS
BIOSOLIDS
DRYER REHABILITATION

CIP NO 0298-05-3
FILE NO: 4289-4

CONTROL SYSTEM PANEL
BIOSOLIDS DRYERS
INPUT/OUTPUT WIRING

CITY OF HOUSTON
DEPARTMENT OF PUBLIC WORKS AND ENGINEERING
ENGINEERING, CONSTRUCTION AND REAL ESTATE GROUP

SECTION APPROVALS

WATER ENGINEERING
TRAFFIC AND SIGNAL ENGINEERING
Harold Lanssch 2-25-99
WASTEWATER ENGINEERING
STREET & BRIDGE ENGINEERING
STORMWATER ENGINEERING
Courtney Crues 3/2/99
CONSTRUCTION
Jai Malhotra 2/25/99

OTHER DEPARTMENTS

PLANNING AND DEVELOPMENT
SPONSOR DEPARTMENT
Herbert Lum 3-2-99
CITY ENGINEER DATE
DIRECTOR OF PUBLIC WORKS AND ENGINEERING 3/5/99 DATE

SUBMITTED:
SCALE: NONE
NONE
DATE:12/4/98
SURVEY BY: N/A
F B NO:

DESIGNED BY: JMC
DRAWN BY: MBB
DWG. NO. : I8
SHT NO 24 of 159 SHTS

CITY DWG NO:
35001

ORIGINAL SCALE IN INCHES
FOR REDUCED PLANS
0 1 2 3

CADD DWG FILE NO : K:\BBI-AS\I9.DWG
FILE DATE-OPERATOR:

MATCHLINE 'I' - DWG I8

24V DC CONTROL POWER

SLOT 5

IT-1303	TB3-3	50mA	TB3-3	313	IN1+
	TB3-4			314	IN1-
	TB3-5			315	GND
IT-1313	TB3-6	50mA	TB3-6	316	IN2+
	TB3-7			317	IN2-
	TB3-8			318	GND
ST-1343	TB3-9	50mA	TB3-9	319	IN3+
	TB3-10			320	IN3-
	TB3-11			321	GND
PT-1332	TB3-12	50mA	TB3-12	322	IN4+
	TB3-13			323	IN4-
	TB3-15			324	GND
IT-1353	TB3-16	50mA	TB3-16	325	IN5+
	TB3-17			326	IN5-
	TB3-18			327	GND
IT-1223	TB3-19	50mA	TB3-19	328	IN6+
	TB3-20			329	IN6-
	TB3-21			330	GND
PT-1213	TB3-22	50mA	TB3-22	331	IN7+
	TB3-23			332	IN7-
	TB3-25			333	GND
PT-1231	TB3-26	50mA	TB3-26	334	IN8+
	TB3-27			335	IN8-
	TB3-29			336	GND

310 311 312 337 338 339

CYCLONE COLLECTOR NO. 1 DUST DISCHARGE PRESSURE — TB3-14

I. D. FAN NO. 1 SUCTION PRESSURE — TB3-24

COMBUSTION AIR FAN NO. 1 DISCHARGE PRESSURE — TB3-28

CAGE MILL MIXER NO. 1 CURRENT

CAGE MILL NO. 1 CURRENT

DIVIDER CONVEYOR NO. 1 SPEED

VAPOR FAN NO. 1 CURRENT

I. D. FAN NO. 1 CURRENT

MATCHLINE 'J'

MATCHLINE 'J'

SLOT 6

PT-1233	TB3-30	50mA	TB3-30	342	IN1+
	TB3-31			343	IN1-
	TB3-33			344	GND
IT-2303	TB3-34	50mA	TB3-34	345	IN2+
	TB3-35			346	IN2-
	TB3-36			347	GND
IT-2313	TB3-37	50mA	TB3-37	348	IN3+
	TB3-38			349	IN3-
	TB3-39			230	GND
ST-2343	TB3-40	50mA	TB3-40	351	IN4+
	TB3-41			352	IN4-
	TB3-42			353	GND
PT-2332	TB3-43	50mA	TB3-43	354	IN5+
	TB3-44			355	IN5-
	TB3-46			356	GND
IT-2353	TB3-47	50mA	TB3-47	357	IN6+
	TB3-48			358	IN6-
	TB3-49			359	GND
IT-2223	TB3-50	50mA	TB3-50	360	IN7+
	TB3-51			361	IN7-
	TB3-52			362	GND
PT-2213	TB3-53	50mA	TB3-53	363	IN8+
	TB3-54			364	IN8-
	TB3-56			365	GND

340 341 366 367 368 369

FURNACE NO. 1 DRAFT PRESSURE — TB3-32

CAGE MILL NO. 2 CURRENT

DIVIDER CONVEYOR NO. 2 SPEED

CYCLONE COLLECTOR NO. 2 DUST DISCHARGE PRESSURE

VAPOR FAN NO. 2 CURRENT — TB3-45

I. D. FAN NO. 2 CURRENT

I. D. FAN NO. 2 SUCTION PRESSURE

COMBUSTION AIR FAN NO. 2 DISCHARGE PRESSURE — TB3-55

MATCHLINE 'K' - DWG I10

ORIGINAL SCALE IN INCHES FOR REDUCED PLANS
0 1 2 3

REV NO	DESCRIPTION	APP'D	DATE

SEAL: AS-BUILT 1/25/02

SEAL: STATE OF TEXAS — JESSE M. CARR III — P.E. 52288 — REGISTERED — 2-24-99

intellex CORPORATION
CONTROL SYSTEMS ENGINEERS
11230 WILCREST GREEN Houston, Texas 77042

CH2M HILL
7600 West Tidwell Road, Suite 400
Houston Tx 77040
713.462.0161

Binkley & Barfield, Inc.
Consulting Engineers
1710 Seamist Drive Houston, Texas 77008

ALMEDA SIMS
BIOSOLIDS
DRYER REHABILITATION

CIP NO 0298-05-3
FILE NO: 4289-4

CONTROL SYSTEM PANEL
BIOSOLIDS DRYERS
INPUT/OUTPUT WIRING

CITY OF HOUSTON
DEPARTMENT OF PUBLIC WORKS AND ENGINEERING
ENGINEERING, CONSTRUCTION AND REAL ESTATE GROUP

SECTION APPROVALS

WATER ENGINEERING

TRAFFIC AND SIGNAL ENGINEERING

Hamid Tousefi 2-25-99
WASTEWATER ENGINEERING

STREET & BRIDGE ENGINEERING

STORMWATER ENGINEERING

Rodney Rucker 3/5/99
CONSTRUCTION

Zia Mohammadi 2/25/99

OTHER DEPARTMENTS

PLANNING AND DEVELOPMENT

SPONSOR DEPARTMENT

CITY ENGINEER — 3-2-99 DATE

DIRECTOR OF PUBLIC WORKS AND ENGINEERING — 3/5/99 DATE

SUBMITTED:
SCALE: NONE
NONE
DATE:12/4/98
SURVEY BY: N/A
F B NO:

DESIGNED BY: JMC
DRAWN BY: MBB
DWG. NO. : 19
SHT NO 25 of 59 SHTS
CITY- DWG NO:
35001

CADD DWG FILE NO : K:\BBI-AS\I10.DWG
FILE DATE:--OPERATOR:

MATCHLINE 'K' - DWG I9

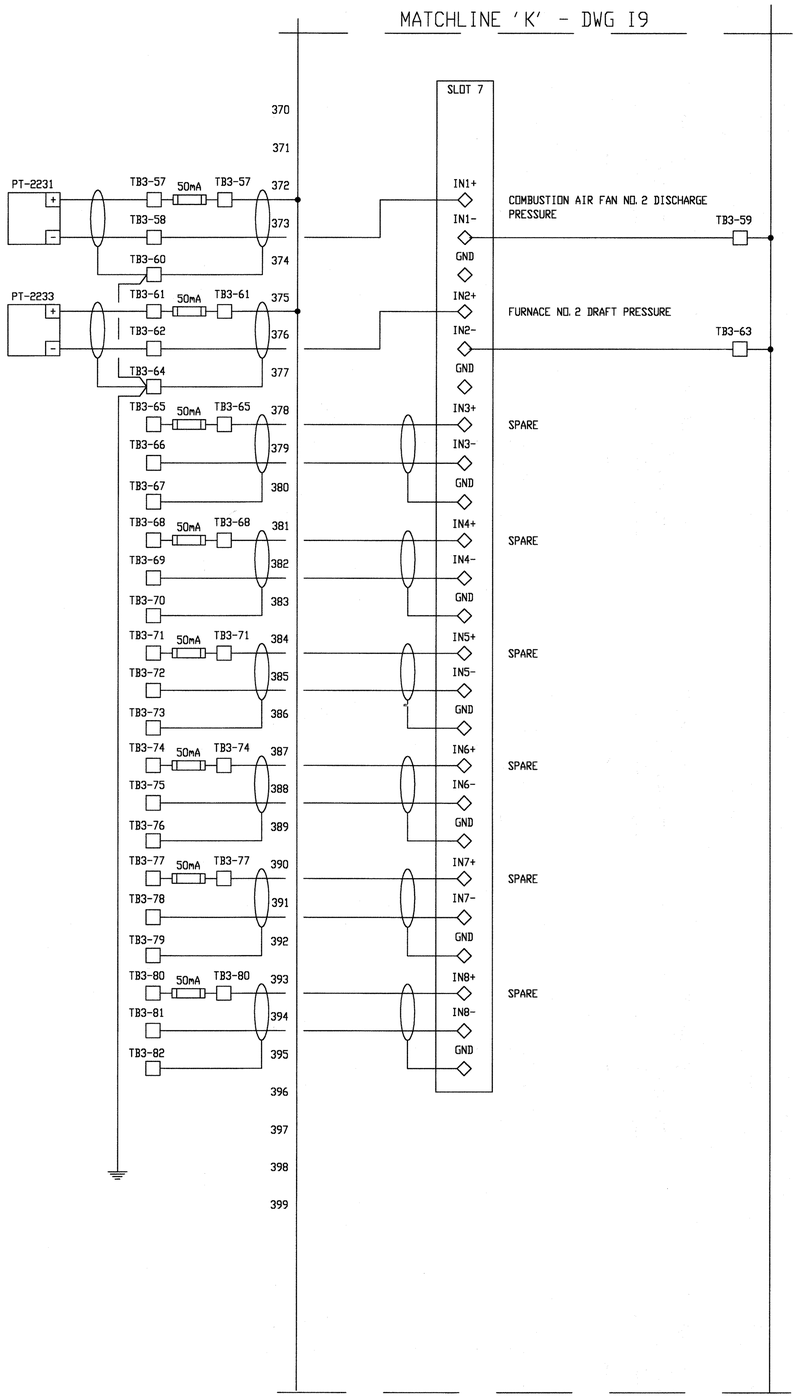

MATCHLINE 'L'

MATCHLINE 'L'

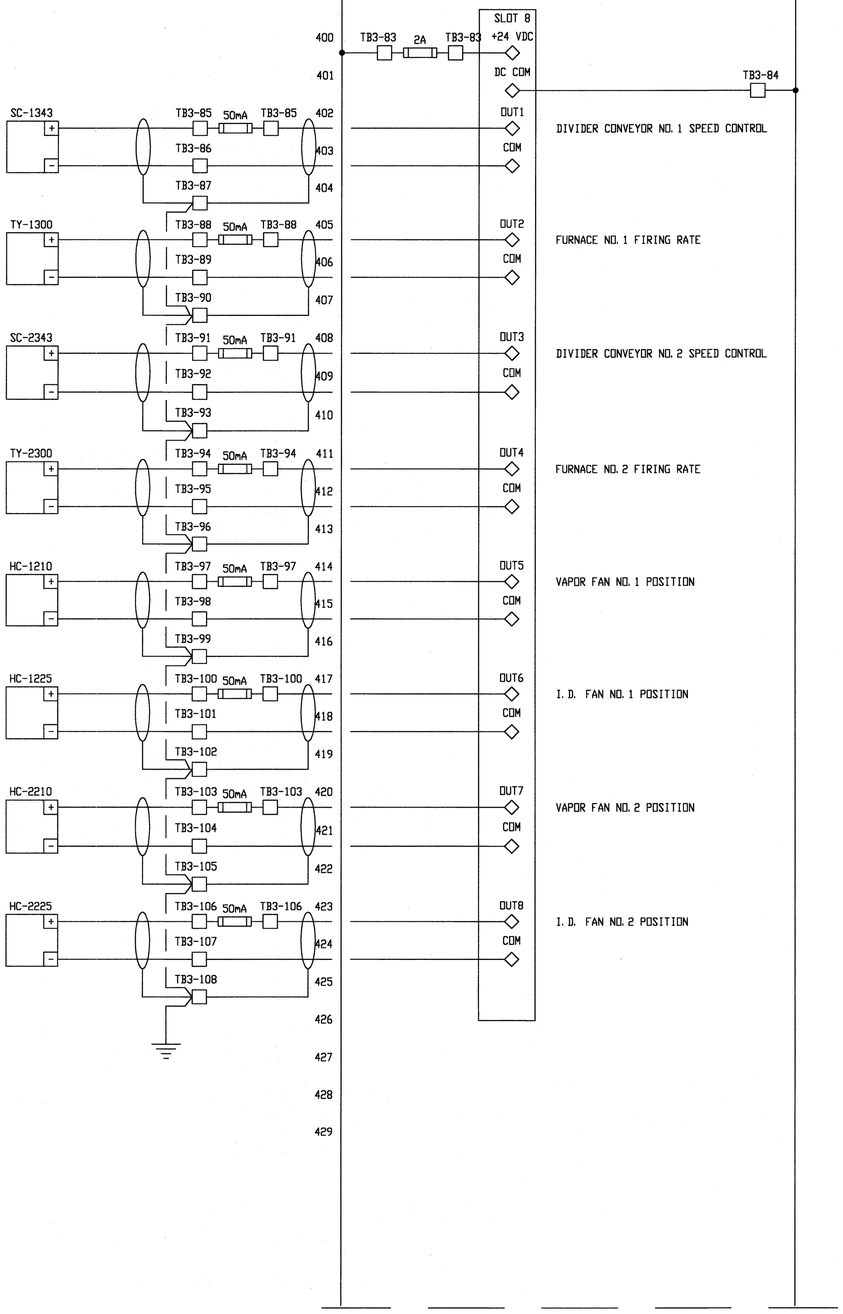

MATCHLINE 'M' - DWG I11

REV NO	DESCRIPTION	APP'D	DATE

SEAL

AS-BUILT
1/25/02

SEAL

STATE OF TEXAS
JESSE M. CARR III
52288
REGISTERED
PROFESSIONAL
ENGINEER
2-24-99

intellex CORPORATION
CONTROL SYSTEMS ENGINEERS
11230 WILCREST GREEN Houston, Texas 77042

CH2M HILL
7600 West Tidwell Road, Suite 400
Houston Tx 77040
713.462.0161

Binkley & Barfield, Inc.
Consulting Engineers
1710 Seamist Drive Houston, Texas 77008

ALMEDA SIMS
BIOSOLIDS
DRYER REHABILITATION

CIP NO 0298-05-3
FILE NO: 4289-4

CONTROL SYSTEM PANEL
BIOSOLIDS DRYERS
INPUT/OUTPUT WIRING

CITY OF HOUSTON
DEPARTMENT OF PUBLIC WORKS AND ENGINEERING
ENGINEERING, CONSTRUCTION AND REAL ESTATE GROUP

SECTION APPROVALS

WATER ENGINEERING
TRAFFIC AND SIGNAL ENGINEERING
Hamid Jaafar 2-25-99
WASTEWATER ENGINEERING
STREET & BRIDGE ENGINEERING
STORMWATER ENGINEERING
CONSTRUCTION
2/25/99

OTHER DEPARTMENTS

PLANNING AND DEVELOPMENT
SPONSOR DEPARTMENT
CITY ENGINEER 3-2-99 DATE
DIRECTOR OF PUBLIC WORKS AND ENGINEERING 3/5/99 DATE

SUBMITTED:
SCALE: NONE
NONE
DATE:12/4/98
SURVEY BY: N/A
F B NO:

DESIGNED BY: JMC
DRAWN BY: MBB
DWG. NO. : I10
SHT NO 26 of 159 SHTS
CITY DWG NO:
35001

ORIGINAL SCALE IN INCHES
FOR REDUCED PLANS
0 1 2 3

CADD DWG FILE NO : K:\RBI-ASV11.DWG
FILE DATE=SEPTEMBER

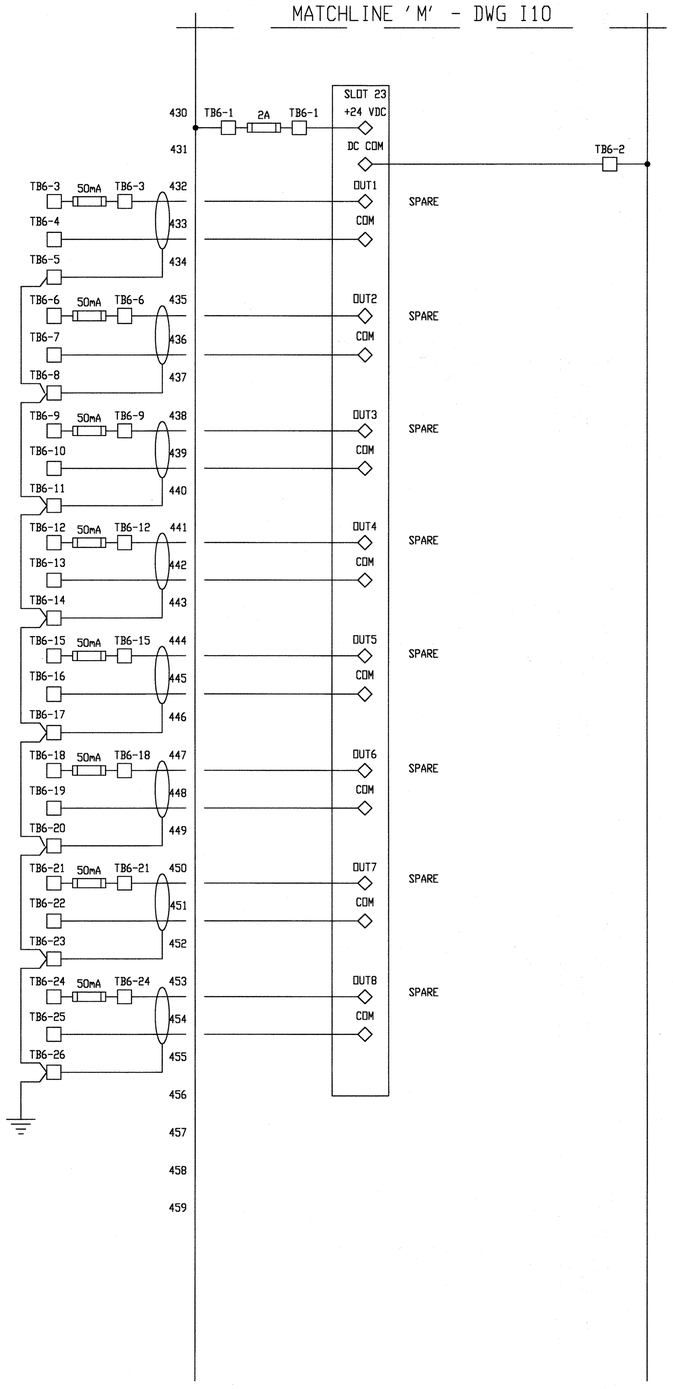

REV NO	DESCRIPTION	APP'D	DATE

SEAL

AS-BUILT
Darrell Ross
4/25/02

SEAL

STATE OF TEXAS
JESSE M. CARR III
52288
REGISTERED
PROFESSIONAL
ENGINEER
2-24-99

intellex CORPORATION
CONTROL SYSTEMS ENGINEERS
11230 WILCREST GREEN Houston, Texas 77042

CH2M HILL
7600 West Tidwell Road, Suite 400
Houston Tx 77040
713.462.0161

Binkley & Barfield, Inc.
Consulting Engineers
1710 Seamist Drive Houston, Texas 77008

ALMEDA SIMS
BIOSOLIDS
DRYER REHABILITATION

CIP NO 0298-05-3
FILE NO: 4289-4

CONTROL SYSTEM PANEL
BIOSOLIDS DRYERS
INPUT/OUTPUT WIRING

CITY OF HOUSTON

DEPARTMENT OF PUBLIC WORKS AND ENGINEERING
ENGINEERING, CONSTRUCTION AND REAL ESTATE GROUP

SECTION APPROVALS

WATER ENGINEERING

TRAFFIC AND SIGNAL ENGINEERING

Hamid Yousefi 2-26-99
WASTEWATER ENGINEERING

STREET & BRIDGE ENGINEERING

STORMWATER ENGINEERING

Rodney Green 3/2/99
CONSTRUCTION

Jia Nahvi 3/25/99

OTHER DEPARTMENTS

PLANNING AND DEVELOPMENT

SPONSOR DEPARTMENT

CITY ENGINEER
3-2-99
DATE

DIRECTOR OF PUBLIC WORKS AND ENGINEERING
3/8/99
DATE

SUBMITTED:
SCALE: NONE
NONE
DATE:12/4/98
SURVEY BY: N/A
F B NO:

DESIGNED BY: JMC
DRAWN BY: MBB
DWG. NO. : I11
SHT NO 27 of 159 SHTS
CITY DWG NO:
35001

ORIGINAL SCALE IN INCHES
FOR REDUCED PLANS
0 1 2 3

CADD DWG FILE NO : K:\BBI-AS\112.DWG
FILE DATE-OPERATOR:

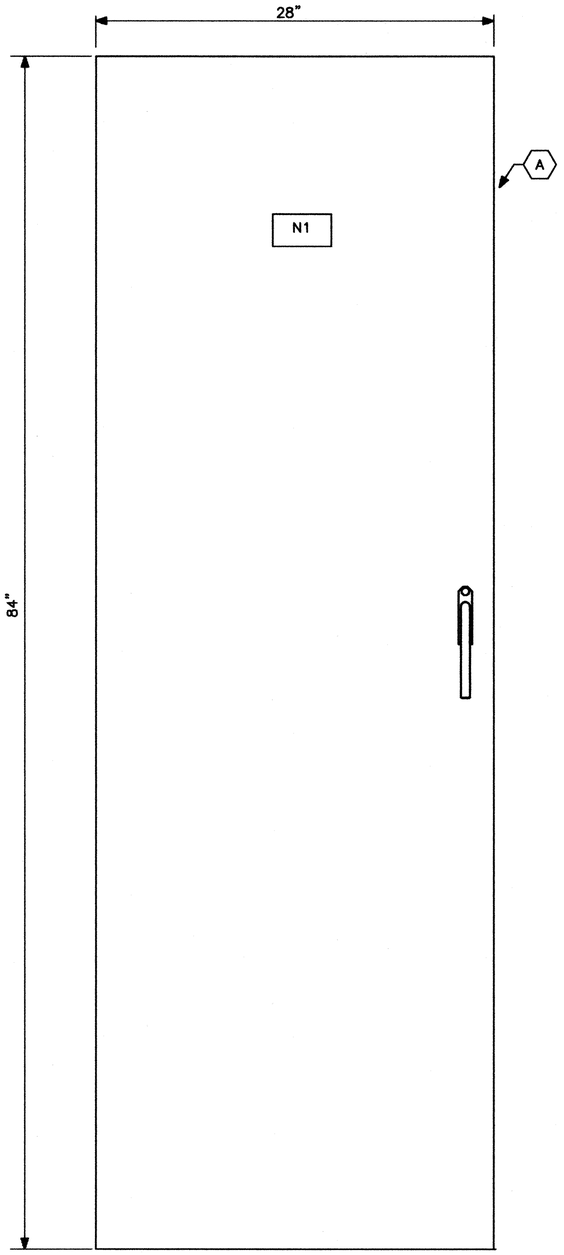

PANEL FRONT ELEVATION

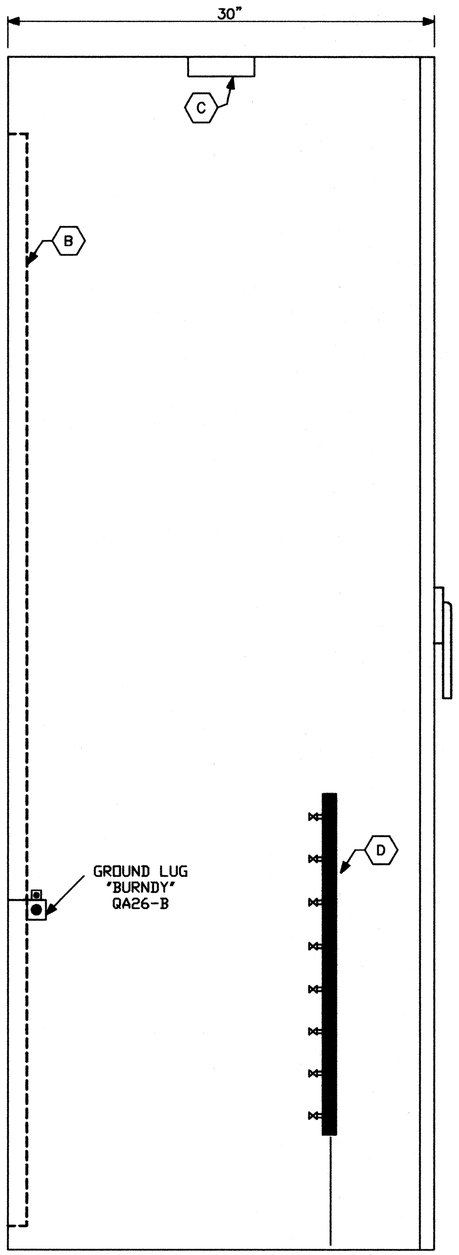

SIDE ELEVATION

ORIGINAL SCALE IN INCHES
FOR REDUCED PLANS
0 1 2 3

NOTES:

1. NAMEPLATES SHALL BE MOUNTED TO PANELS USING STAINLESS STEEL HARDWARE.
2. NAMEPLATES SHALL BE BLACK LAMACOID WITH 1/4" WHITE LETTERS.
3. BOTTOM OF CABINET SHALL BE OPEN FOR CONDUIT / TUBING ENTRY.

BILL OF MATERIALS

TAG	DESCRIPTION	QTY
A	NEMA 12 84x28x30 HOFFMAN CABINET 842830LP OR EQUAL (NOTE 3)	1
B	81x25 HOFFMAN PANEL A-84P28 OR EQUAL	1
C	24 WATT SINGLE BULB FLUORESCENT LIGHT FIXTURE	1
D	1" AIR HEADER BRASS, 24" LONG WITH 8 1/4" AIR TAKEOFF VALVES	1

NAMEPLATE SCHEDULE

ITEM	SIZE	LINE 1	LINE 2	LINE 3
N1	2"x5"	DRYER NO. 1	INSTRUMENTATION	PANEL CP-100B

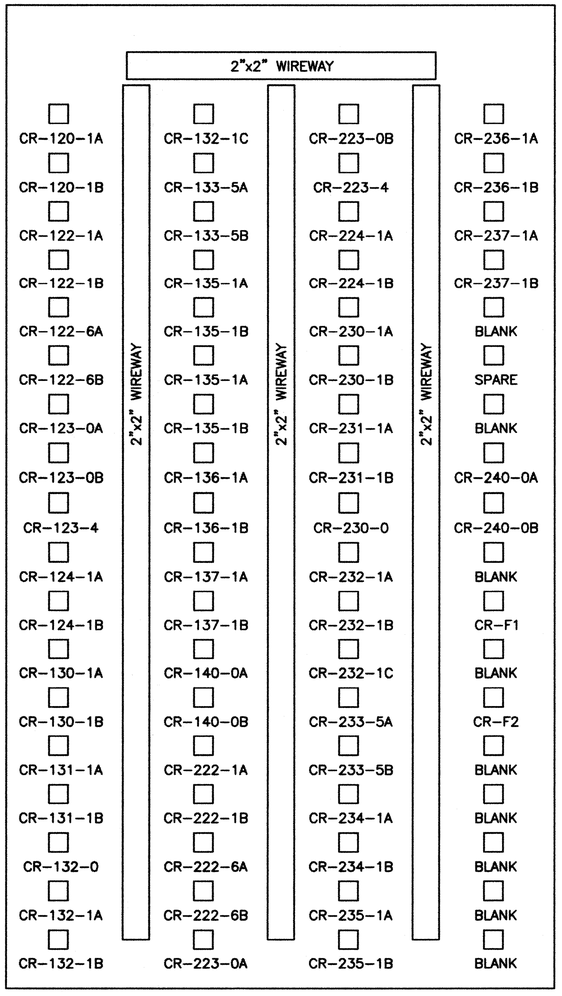

CP100B CABINET
36"x24"x72"

REV NO	DESCRIPTION	APP'D	DATE
1	AS BUILT DRAWING	DJR	12/01

SEAL

STATE OF TEXAS
DAVID J. ROSS
68267
REGISTERED
PROFESSIONAL ENGINEER
1/25/02

SEAL

AS-BUILT

intellex CORPORATION
CONTROL SYSTEMS ENGINEERS
11230 WILCREST GREEN Houston, Texas 77042

CH2M HILL
7600 West Tidwell Road, Suite 400
Houston Tx 77040
713.462.0161

Binkley & Barfield, Inc.
Consulting Engineers
1710 Seamist Drive Houston, Texas 77008

ALMEDA SIMS
BIOSOLIDS
DRYER REHABILITATION

CIP NO 0298-05-3
FILE NO: 4289-4

CONTROL SYSTEM PANEL
DRYER NO.1 INSTRUMENTATION
PANEL FACE LAYOUT

CITY OF HOUSTON
DEPARTMENT OF PUBLIC WORKS AND ENGINEERING
ENGINEERING, CONSTRUCTION AND REAL ESTATE GROUP

SECTION APPROVALS

WATER ENGINEERING
TRAFFIC AND SIGNAL ENGINEERING
WASTEWATER ENGINEERING
STREET & BRIDGE ENGINEERING
STORMWATER ENGINEERING
CONSTRUCTION

OTHER DEPARTMENTS

PLANNING AND DEVELOPMENT
SPONSOR DEPARTMENT

CITY ENGINEER — DATE

DIRECTOR OF PUBLIC WORKS AND ENGINEERING — DATE

SUBMITTED:
SCALE: NONE
NONE
DATE: 12/4/98
SURVEY BY: N/A
F B NO:

DESIGNED BY: JMC
DRAWN BY: MBB
DWG. NO. : I12
SHT NO 28 of 159 SHTS

CITY DWG NO:
35001

CADD DWG FILE NO : K:\BBI-AS\I12.DWG
FILE DATE-OPERATOR:

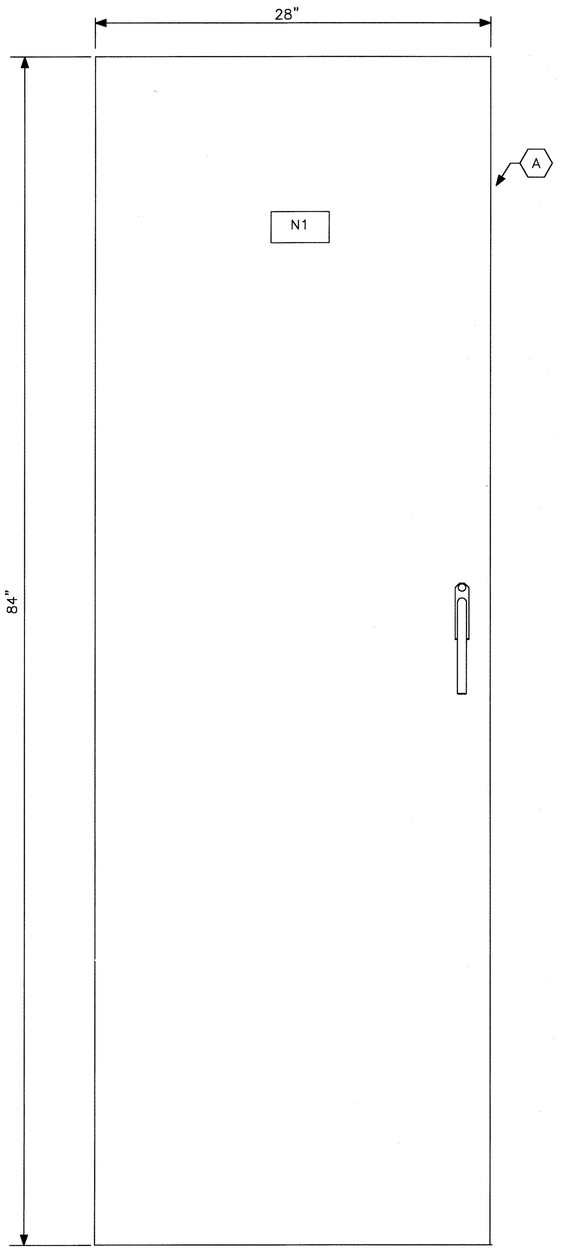

PANEL FRONT ELEVATION

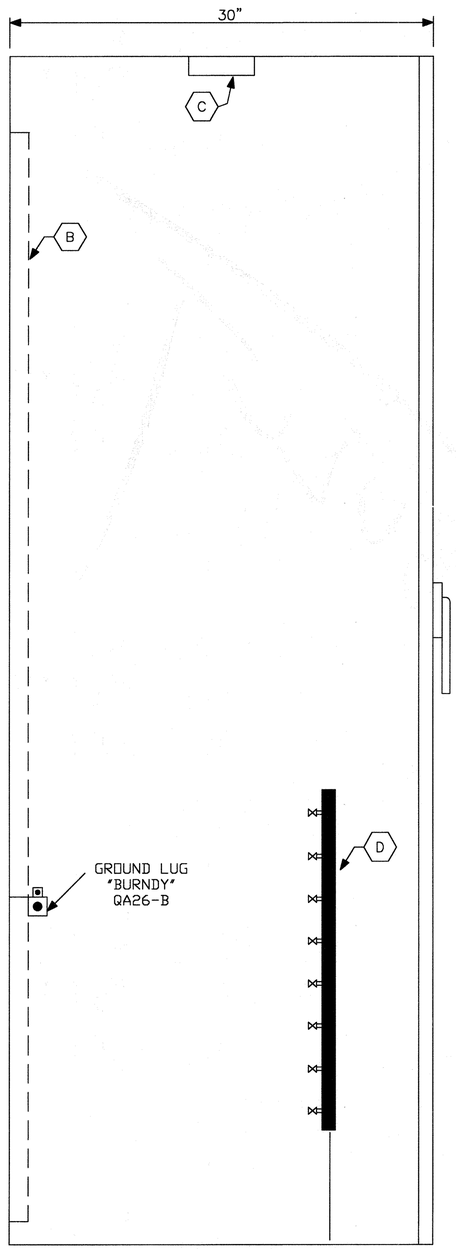

SIDE ELEVATION

NOTES:

1. NAMEPLATES SHALL BE MOUNTED TO PANELS USING STAINLESS STEEL HARDWARE.
2. NAMEPLATES SHALL BE BLACK LAMACOID WITH 1/4" WHITE LETTERS.
3. BOTTOM OF CABINET SHALL BE OPEN FOR CONDUIT / TUBING ENTRY.

BILL OF MATERIALS

TAG	DESCRIPTION	QTY
A	NEMA 12 84x28x30 HOFFMAN CABINET 842830LP OR EQUAL (NOTE 3)	1
B	81x25 HOFFMAN PANEL A-84P28 OR EQUAL	1
C	24 WATT SINGLE BULB FLUORESCENT LIGHT FIXTURE	1
D	1" AIR HEADER BRASS, 24" LONG WITH 8 1/4" AIR TAKEOFF VALVES	1

NAMEPLATE SCHEDULE

ITEM	SIZE	LINE 1	LINE 2	LINE 3
N1	2"x5"	DRYER NO. 1	INSTRUMENTATION	PANEL CP-100B

REV NO	DESCRIPTION	APP'D	DATE

SEAL

SEAL
STATE OF TEXAS
JESSE M. CARR III
52288
REGISTERED PROFESSIONAL ENGINEER
2-24-99

intellex CORPORATION
CONTROL SYSTEMS ENGINEERS
11230 WILCREST GREEN Houston, Texas 77042

CH2M HILL
7600 West Tidwell Road, Suite 400
Houston Tx 77040
713.462.0161

Binkley & Barfield, Inc.
Consulting Engineers
1710 Seamist Drive Houston, Texas 77008

ALMEDA SIMS
BIOSOLIDS
DRYER REHABILITATION

CIP NO 0298-05-3
FILE NO: 4289-4

CONTROL SYSTEM PANEL
DRYER NO.1 INSTRUMENTATION
PANEL FACE LAYOUT

CITY OF HOUSTON
DEPARTMENT OF PUBLIC WORKS AND ENGINEERING
ENGINEERING, CONSTRUCTION AND REAL ESTATE GROUP

SECTION APPROVALS

WATER ENGINEERING
TRAFFIC AND SIGNAL ENGINEERING
Hamid Jousseff 2-25-99
WASTEWATER ENGINEERING
STREET & BRIDGE ENGINEERING
STORMWATER ENGINEERING
CONSTRUCTION 3/2/99
Zia Mahmood 3/2/99

OTHER DEPARTMENTS

PLANNING AND DEVELOPMENT
SPONSOR DEPARTMENT
CITY ENGINEER 3-2-99 DATE
DIRECTOR OF PUBLIC WORKS AND ENGINEERING 3/3/99 DATE

SUBMITTED:
SCALE: NONE
NONE
DATE:12/4/98
SURVEY BY: N/A
F B NO:

DESIGNED BY: JMC
DRAWN BY: MBB
DWG. NO. : I12
SHT NO 28 of 159 SHTS
CITY DWG NO:
35001

ORIGINAL SCALE IN INCHES
FOR REDUCED PLANS
0 1 2 3

CADD DWG FILE NO : K:\BBI-AS\113.DWG
FILE DATE-OPERATOR:

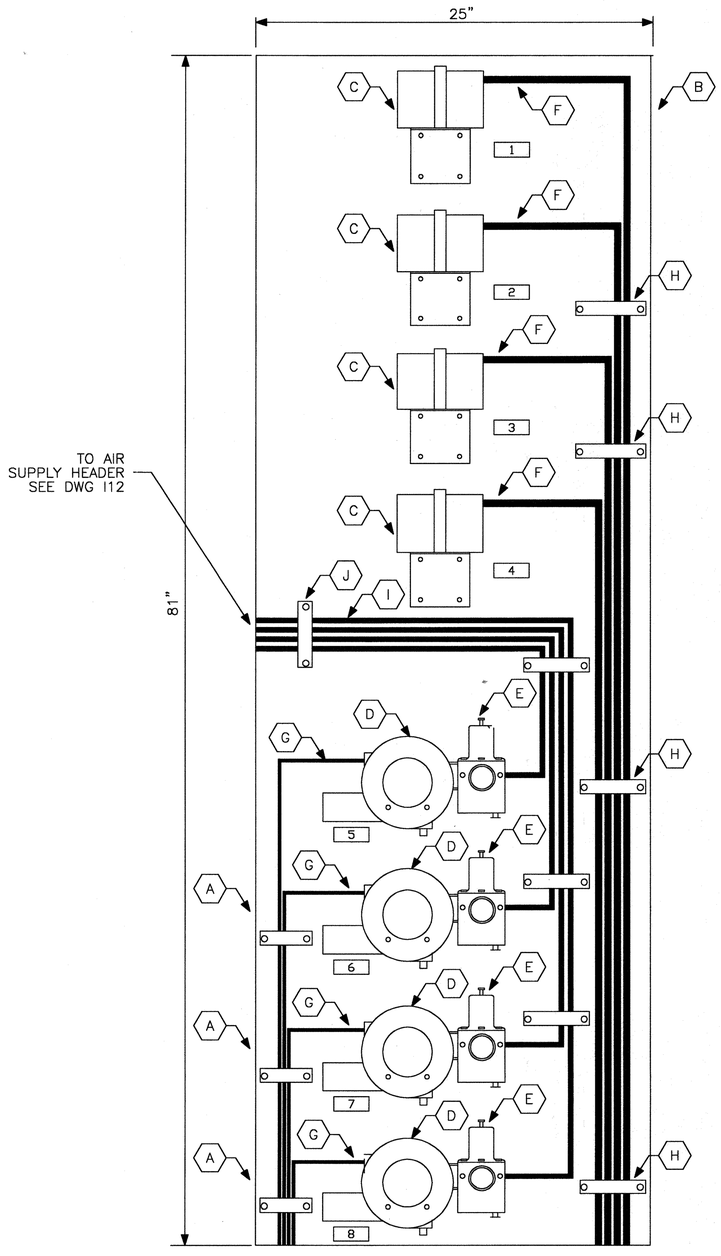

INTERNAL PANEL

BILL OF MATERIALS

TAG	DESCRIPTION	QTY
A	TUBING CLAMP FOR 1/4" O.D. TUBING	3
B	81x25 HOFFMAN PANEL A-84P28 OR EQUAL	1
C	ROSEMOUNT DRAFT PRESSURE TRANSMITTER MODEL 3051CG2A521AB2 OR EQUAL	4
D	FISHER TYPE 546 ELECTRO-PNEUMATIC TRANSDUCER SURFACE MOUNTING	4
E	TYPE 67AFR FILTER REGULATOR, SUPPLY PRESSURE GAUGE 0 - 60 PSIG WITH BACK CONNECTION	4
F	1/2" O.D. STAINLESS STEEL TUBING 0.035" WALL	AR
G	1/4" O.D. COPPER TUBING 0.028" WALL	AR
H	TUBING CLAMP FOR 1/2" O.D. TUBING	4
I	3/8" O.D. COPPER TUBING 0.035" WALL	AR
J	TUBING CLAMP FOR 3/8" O.D. TUBING	4

NAMEPLATE SCHEDULE

ITEM	SIZE	LINE 1	LINE 2	LINE 3
1	1"x2-1/2"	FURNACE	DRAFT	PT-1233
1	1"x2-1/2"	CYCLONE	PRESSURE	PT-1332
1	1"x2-1/2"	I.D. FAN	SUCTION	PT-1213
1	1"x2-1/2"	C.A. FAN	PRESSURE	PT-1231
1	1"x2-1/2"	DRY DIVIDER	SPEED	SY-1343
1	1"x2-1/2"	VAPOR FAN	DAMPER	HY-1210
1	1"x2-1/2"	I.D. FAN	DAMPER	HY-1225
1	1"x2-1/2"	FURNACE	CONTROL	TY-1300

REV NO	DESCRIPTION	APP'D	DATE

SEAL

AS-BUILT
Darrell Ross
1/25/02

SEAL

STATE OF TEXAS
JESSE M. CARR III
52288
REGISTERED
PROFESSIONAL
ENGINEER
2-24-99

intellex CORPORATION
CONTROL SYSTEMS ENGINEERS
11230 WILCREST GREEN Houston, Texas 77042

CH2M HILL
7600 West Tidwell Road, Suite 400
Houston Tx 77040
713.462.0161

Binkley & Barfield, Inc.
Consulting Engineers
1710 Seamist Drive Houston, Texas 77008

ALMEDA SIMS
BIOSOLIDS
DRYER REHABILITATION

CIP NO 0298-05-3
FILE NO: 4289-4

CONTROL SYSTEM PANEL
DRYER NO.1 INSTRUMENTATION
PANEL FABRICATION

CITY OF HOUSTON

DEPARTMENT OF PUBLIC WORKS AND ENGINEERING
ENGINEERING, CONSTRUCTION AND REAL ESTATE GROUP

SECTION APPROVALS

WATER ENGINEERING

TRAFFIC AND SIGNAL ENGINEERING

Hamid Jamseh 2-25-99
WASTEWATER ENGINEERING

STREET & BRIDGE ENGINEERING

STORMWATER ENGINEERING

Courtney Cuner 3/2/99
CONSTRUCTION

Zuri Mok 2/25/99

OTHER DEPARTMENTS

PLANNING AND DEVELOPMENT

SPONSOR DEPARTMENT

Herbert A. Lum 3-2-99
CITY ENGINEER DATE

DIRECTOR OF PUBLIC WORKS AND ENGINEERING DATE 3/8/99

SUBMITTED:
SCALE: NONE
NONE
DATE:12/4/98
SURVEY BY: N/A
F B NO:

DESIGNED BY: JMC
DRAWN BY: MBB
DWG. NO. : 113
SHT NO 29 of 159 SHTS

CITY DWG NO:
35001

ORIGINAL SCALE IN INCHES FOR REDUCED PLANS
0 1 2 3

CADD DWG FILE NO : K:\BBI-AS\114.DWG
FILE DATE-OPERATOR:

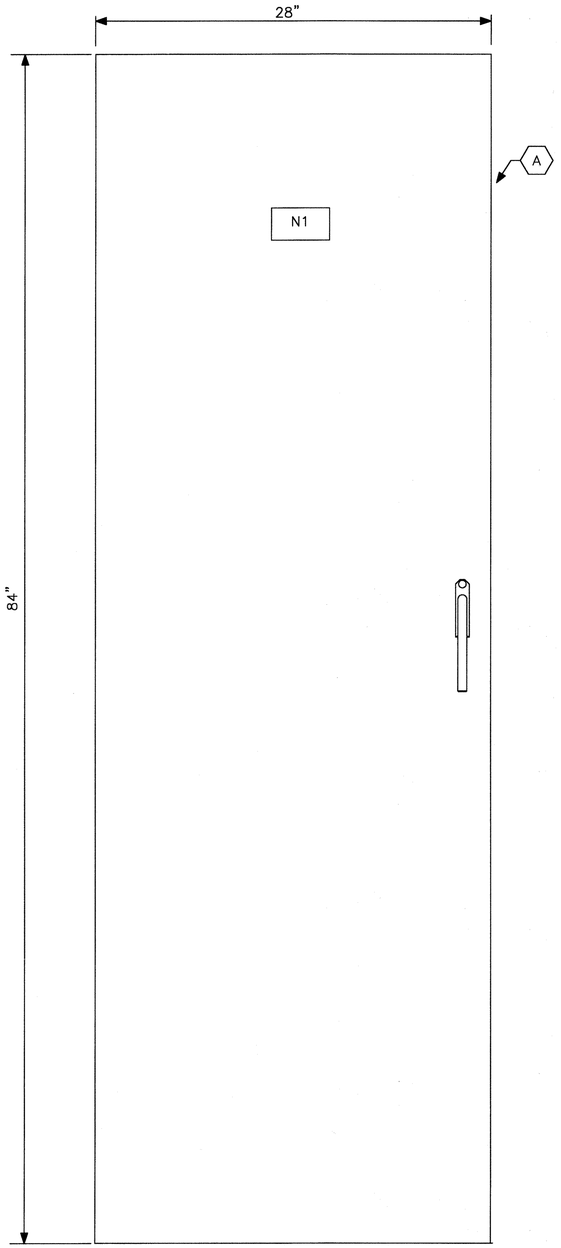

PANEL FRONT ELEVATION

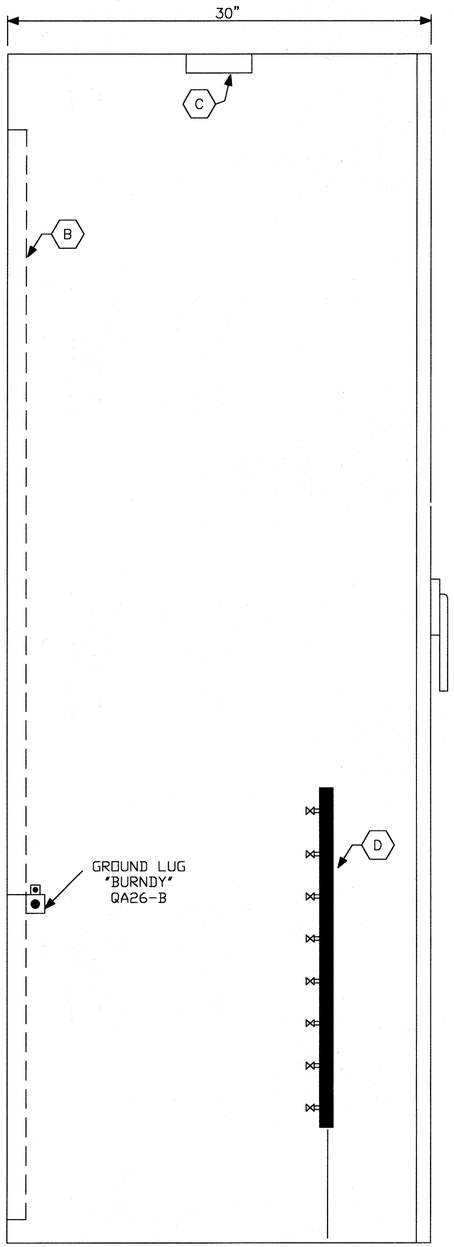

SIDE ELEVATION

NOTES:

1. NAMEPLATES SHALL BE MOUNTED TO PANELS USING STAINLESS STEEL HARDWARE.
2. NAMEPLATES SHALL BE BLACK LAMACOID WITH 1/4" WHITE LETTERS.
3. BOTTOM OF CABINET SHALL BE OPEN FOR CONDUIT / TUBING ENTRY.

BILL OF MATERIALS

TAG	DESCRIPTION	QTY
A	NEMA 12 84x28x30 HOFFMAN CABINET 842830LP OR EQUAL (NOTE 3)	1
B	81x25 HOFFMAN PANEL A-84P28 OR EQUAL	1
C	24 WATT SINGLE BULB FLUORESCENT LIGHT FIXTURE	1
D	1" AIR HEADER BRASS, 24" LONG WITH 8 1/4" AIR TAKEOFF VALVES	1

NAMEPLATE SCHEDULE

ITEM	SIZE	LINE 1	LINE 2	LINE 3
N1	2"x5"	DRYER NO. 2	INSTRUMENTATION	PANEL CP-100C

REV NO	DESCRIPTION	APP'D	DATE

SEAL

AS-BUILT
1/5/02

SEAL

STATE OF TEXAS
JESSE M. CARR III
52288
REGISTERED
PROFESSIONAL ENGINEER
2-24-99

intellex CORPORATION
CONTROL SYSTEMS ENGINEERS
11230 WILCREST GREEN Houston, Texas 77042

CH2M HILL
7600 West Tidwell Road, Suite 400
Houston Tx 77040
713.462.0161

Binkley & Barfield, Inc.
Consulting Engineers
1710 Seamist Drive Houston, Texas 77008

ALMEDA SIMS
BIOSOLIDS
DRYER REHABILITATION

CIP NO 0298-05-3
FILE NO: 4289-4

CONTROL SYSTEM PANEL
DRYER NO.2 INSTRUMENTATION
PANEL FACE LAYOUT

CITY OF HOUSTON
DEPARTMENT OF PUBLIC WORKS AND ENGINEERING
ENGINEERING, CONSTRUCTION AND REAL ESTATE GROUP

SECTION APPROVALS

WATER ENGINEERING
TRAFFIC AND SIGNAL ENGINEERING
Hamid Youssef 2-25-99
WASTEWATER ENGINEERING
STREET & BRIDGE ENGINEERING
STORMWATER ENGINEERING
Courtney Rice 3/2/99
CONSTRUCTION
Zaid Mahdi 2/25/99

OTHER DEPARTMENTS

PLANNING AND DEVELOPMENT
SPONSOR DEPARTMENT
Herbert Lum 3-2-99
CITY ENGINEER DATE
DIRECTOR OF PUBLIC WORKS AND ENGINEERING 3/8/99 DATE

SUBMITTED:
SCALE: NONE
NONE
DATE:12/4/98
SURVEY BY: N/A
F B NO:

DESIGNED BY: JMC
DRAWN BY: MBB
DWG. NO. : 114
SHT NO 30 of 159 SHTS
CITY DWG NO:
35001

ORIGINAL SCALE IN INCHES
FOR REDUCED PLANS
0 1 2 3

CADD DWG FILE NO : K:\BBI-AS\115.DWG
FILE DATE--OPERATOR:

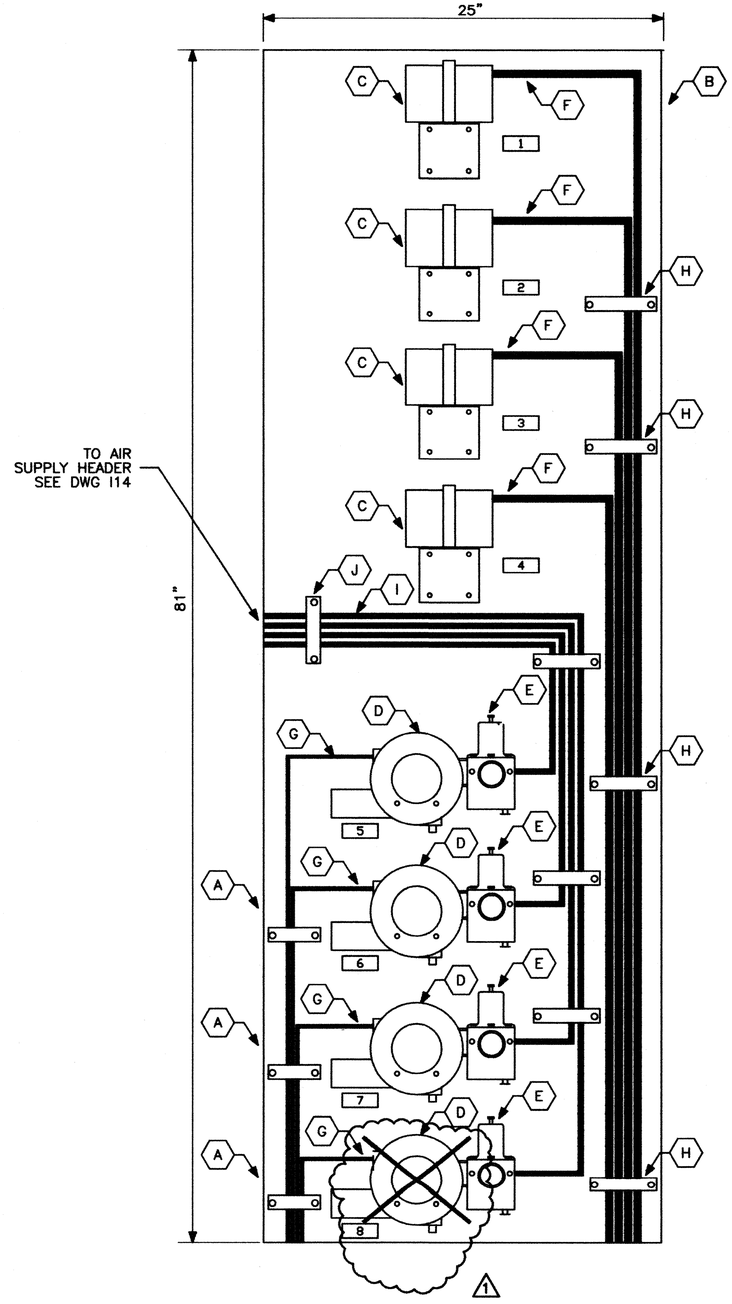

INTERNAL PANEL

BILL OF MATERIALS

TAG	DESCRIPTION	QTY
A	TUBING CLAMP FOR 1/4" O.D. TUBING	3
B	81x25 HOFFMAN PANEL A-84P28 OR EQUAL	1
C	ROSEMOUNT DRAFT PRESSURE TRANSMITTER MODEL 3051CG2A521AB2 OR EQUAL	3
D	FISHER TYPE 546 ELECTRO-PNEUMATIC TRANSDUCER SURFACE MOUNTING	4
E	TYPE 67AFR FILTER REGULATOR, SUPPLY PRESSURE GAUGE 0 - 60 PSIG WITH BACK CONNECTION	4
F	1/2" O.D. STAINLESS STEEL TUBING 0.035" WALL	AR
G	1/4" O.D. COPPER TUBING 0.028" WALL	AR
H	TUBING CLAMP FOR 1/2" O.D. TUBING	4
I	3/8" O.D. COPPER TUBING 0.035" WALL	AR
J	TUBING CLAMP FOR 3/8" O.D. TUBING	4
D	FISHER TYPE 546 I/P TRANSDUCER (MOVED TO FURNACE)	1

1

NAMEPLATE SCHEDULE

ITEM	SIZE	LINE 1	LINE 2	LINE 3
1	1"x2-1/2"	FURNACE	DRAFT	PT-2233
1	1"x2-1/2"	CYCLONE	PRESSURE	PT-2332
1	1"x2-1/2"	I.D. FAN	SUCTION	PT-2213
1	1"x2-1/2"	C.A. FAN	PRESSURE	PT-2231
1	1"x2-1/2"	DRY DIVIDER	SPEED	SY-2343
1	1"x2-1/2"	VAPOR FAN	DAMPER	HY-2210
1	1"x2-1/2"	I.D. FAN	DAMPER	HY-2225
1	1"x2-1/2"	FURNACE	CONTROL	TY-2300 *

* RELOCATED FROM PANEL TO FURNACE

1

REV NO	DESCRIPTION	APP'D	DATE
1	AS BUILT DRAWING	DJR	12/01

SEAL
STATE OF TEXAS
DAVID J. ROSS
68267
REGISTERED PROFESSIONAL ENGINEER

SEAL
AS-BUILT
1/25/02

intellex CORPORATION
CONTROL SYSTEMS ENGINEERS
11230 WILCREST GREEN Houston, Texas 77042

CH2M HILL
7600 West Tidwell Road, Suite 400
Houston Tx 77040
713.462.0161

Binkley & Barfield, Inc.
Consulting Engineers
1710 Seamist Drive Houston, Texas 77008

ALMEDA SIMS BIOSOLIDS DRYER REHABILITATION

CIP NO 0298-05-3
FILE NO: 4289-4

CONTROL SYSTEM PANEL DRYERS NO.2 INSTRUMENTATION PANEL FABRICATION

CITY OF HOUSTON
DEPARTMENT OF PUBLIC WORKS AND ENGINEERING
ENGINEERING, CONSTRUCTION AND REAL ESTATE GROUP

SECTION APPROVALS

WATER ENGINEERING
TRAFFIC AND SIGNAL ENGINEERING
WASTEWATER ENGINEERING
STREET & BRIDGE ENGINEERING
STORMWATER ENGINEERING
CONSTRUCTION

OTHER DEPARTMENTS

PLANNING AND DEVELOPMENT
SPONSOR DEPARTMENT

CITY ENGINEER — DATE
DIRECTOR OF PUBLIC WORKS AND ENGINEERING — DATE

SUBMITTED:
SCALE: NONE
NONE
DATE: 12/4/98
SURVEY BY: N/A
F B NO:

DESIGNED BY: JMC
DRAWN BY: MBB
DWG. NO. : 115
SHT NO 31 of 159 SHTS
CITY DWG NO: 35001

ORIGINAL SCALE IN INCHES
FOR REDUCED PLANS
0 1 2 3

CADD DWG FILE NO : K:\BBI-AS\I15.DWG
FILE DATE-OPERATOR:

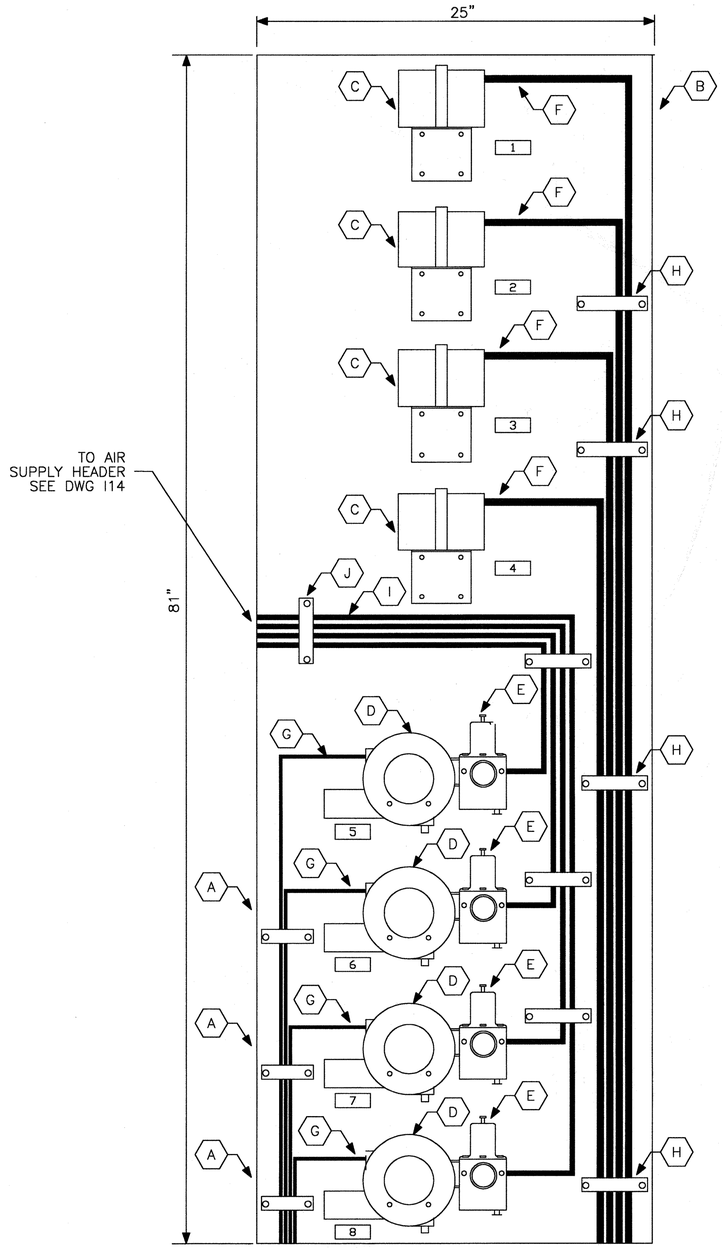

INTERNAL PANEL

BILL OF MATERIALS

TAG	DESCRIPTION	QTY
A	TUBING CLAMP FOR 1/4" O.D. TUBING	3
B	81x25 HOFFMAN PANEL A-84P28 OR EQUAL	1
C	ROSEMOUNT DRAFT PRESSURE TRANSMITTER MODEL 3051CG2A521AB2 OR EQUAL	4
D	FISHER TYPE 546 ELECTRO-PNEUMATIC TRANSDUCER SURFACE MOUNTING	4
E	TYPE 67AFR FILTER REGULATOR, SUPPLY PRESSURE GAUGE 0 - 60 PSIG WITH BACK CONNECTION	4
F	1/2" O.D. STAINLESS STEEL TUBING 0.035" WALL	AR
G	1/4" O.D. COPPER TUBING 0.028" WALL	AR
H	TUBING CLAMP FOR 1/2" O.D. TUBING	4
I	3/8" O.D. COPPER TUBING 0.035" WALL	AR
J	TUBING CLAMP FOR 3/8" O.D. TUBING	4

NAMEPLATE SCHEDULE

ITEM	SIZE	LINE 1	LINE 2	LINE 3
1	1"x2-1/2"	FURNACE	DRAFT	PT-2233
1	1"x2-1/2"	CYCLONE	PRESSURE	PT-2332
1	1"x2-1/2"	I.D. FAN	SUCTION	PT-2213
1	1"x2-1/2"	C.A. FAN	PRESSURE	PT-2231
1	1"x2-1/2"	DRY DIVIDER	SPEED	SY-2343
1	1"x2-1/2"	VAPOR FAN	DAMPER	HY-2210
1	1"x2-1/2"	I.D. FAN	DAMPER	HY-2225
1	1"x2-1/2"	FURNACE	CONTROL	TY-2300

REV NO	DESCRIPTION	APP'D	DATE

SEAL

SEAL
STATE OF TEXAS
JESSE M. CARR III
52288
REGISTERED
PROFESSIONAL ENGINEER
2-24-99

intellex CORPORATION
CONTROL SYSTEMS ENGINEERS
11230 WILCREST GREEN Houston, Texas 77042

CH2M HILL
7600 West Tidwell Road, Suite 400
Houston Tx 77040
713.462.0161

Binkley & Barfield, Inc.
Consulting Engineers
1710 Seamist Drive Houston, Texas 77008

ALMEDA SIMS
BIOSOLIDS
DRYER REHABILITATION

CIP NO 0298-05-3
FILE NO: 4289-4

CONTROL SYSTEM PANEL
DRYER NO.2 INSTRUMENTATION
PANEL FABRICATION

CITY OF HOUSTON

DEPARTMENT OF PUBLIC WORKS AND ENGINEERING
ENGINEERING, CONSTRUCTION AND REAL ESTATE GROUP

SECTION APPROVALS

WATER ENGINEERING

TRAFFIC AND SIGNAL ENGINEERING

WASTEWATER ENGINEERING 2-25-99

STREET & BRIDGE ENGINEERING

STORMWATER ENGINEERING

CONSTRUCTION 3/2/99

3/2/99

OTHER DEPARTMENTS

PLANNING AND DEVELOPMENT

SPONSOR DEPARTMENT

CITY ENGINEER 3-2-99 DATE

DIRECTOR OF PUBLIC WORKS AND ENGINEERING 3/6/99 DATE

SUBMITTED:
SCALE: NONE
NONE
DATE:12/4/98
SURVEY BY: N/A
F B NO:

DESIGNED BY: JMC
DRAWN BY: MBB
DWG. NO. : I15
SHT NO 31 of 159 SHTS
CITY DWG NO:
35001

ORIGINAL SCALE IN INCHES
FOR REDUCED PLANS
0 1 2 3

CADD DWG FILE NO : K:\BBI-ASV\I16.DWG
FILE DATE--OPERATOR:

DRYER CONTROL ROOM
(SEE DWG I-34)

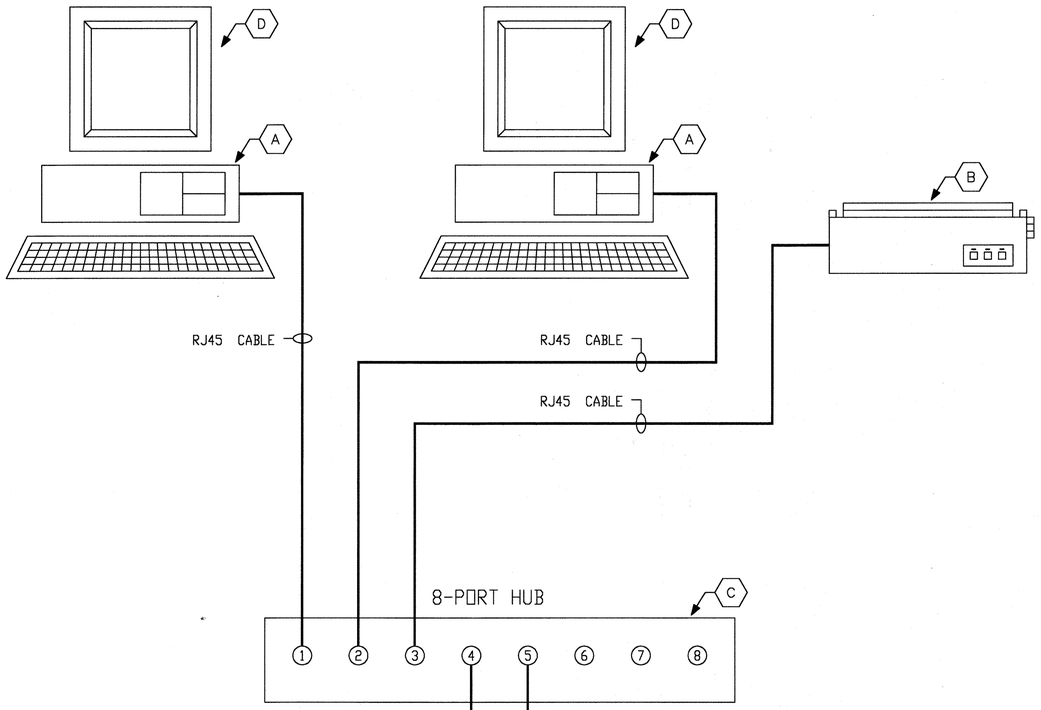

BILL OF MATERIALS

TAG	DESCRIPTION	QTY
A	PENTIUM II 450MHz PROCESSOR PERSONAL COMPUTER RUNNING WONDERWARE	2
B	NETWORK LASER PRINTER	1
C	8-PORT NETWORK ETHERNET HUB	1
D	19" MONITOR WITH TOUCH SCREEN	2

PANEL CP 100A
(SEE DWG I-4, I-5)

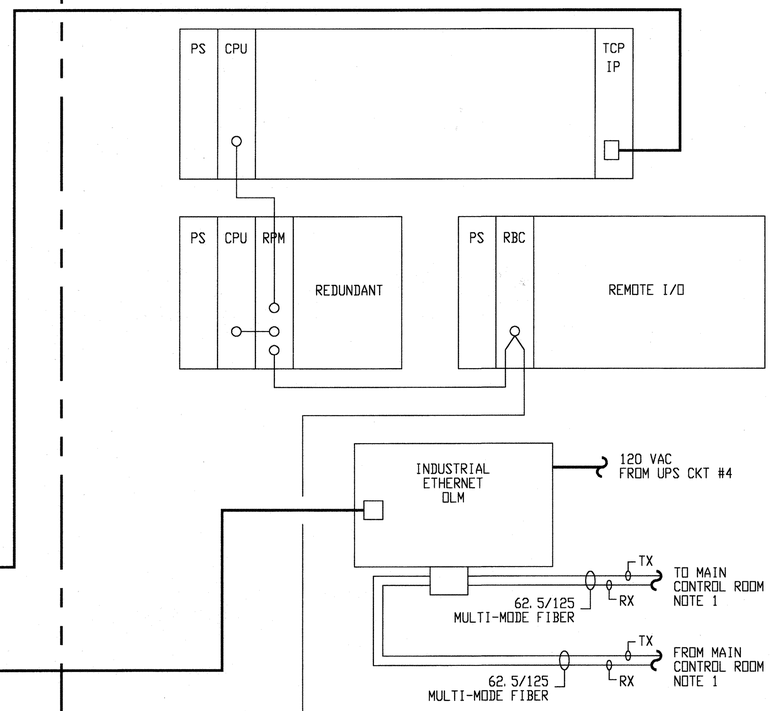

PANEL CP 200
(SEE DWG I-28, I-29)

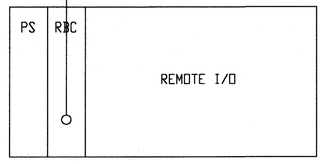

NOTES:

1. CONTRACTOR TO LEAVE 50 FEET OF FIBER, UNTERMINATED, IN MAIN CONTROL ROOM. TERMINATION TO BE COMPLETED UNDER ANOTHER CONTRACT.

ORIGINAL SCALE IN INCHES FOR REDUCED PLANS
0 1 2 3

REV NO	DESCRIPTION	APP'D	DATE

SEAL
AS-BUILT
Darrell Ross
1/25/02

SEAL
STATE OF TEXAS
JESSE M. CARR III
52288
REGISTERED PROFESSIONAL ENGINEER
2-24-99

intellex CORPORATION
CONTROL SYSTEMS ENGINEERS
11230 WILCREST GREEN Houston, Texas 77042

CH2M HILL
7600 West Tidwell Road, Suite 400
Houston Tx 77040
713.462.0161

Binkley & Barfield, Inc.
Consulting Engineers
1710 Seamist Drive Houston, Texas 77008

ALMEDA SIMS
BIOSOLIDS
DRYER REHABILITATION

CIP NO 0298-05-3
FILE NO: 4289-4

CONTROL SYSTEM NETWORK
DRYERS CONTROL ROOM
NETWORK LAYOUT

CITY OF HOUSTON
DEPARTMENT OF PUBLIC WORKS AND ENGINEERING
ENGINEERING, CONSTRUCTION AND REAL ESTATE GROUP

SECTION APPROVALS

WATER ENGINEERING

TRAFFIC AND SIGNAL ENGINEERING

Hamid Jaweed 2-25-99
WASTEWATER ENGINEERING

STREET & BRIDGE ENGINEERING

STORMWATER ENGINEERING

Gustavo Cisneros 3/2/99
CONSTRUCTION

Zaid Mahdi 2/25/99

OTHER DEPARTMENTS

PLANNING AND DEVELOPMENT

SPONSOR DEPARTMENT

Herbert Lum 3-2-99
CITY ENGINEER DATE

DIRECTOR OF PUBLIC WORKS AND ENGINEERING 3/5/99 DATE

SUBMITTED:
SCALE: NONE
NONE
DATE: 12/4/98
SURVEY BY: N/A
F B NO:

DESIGNED BY: JMC
DRAWN BY: MBB
DWG. NO. : I16
SHT NO 32 of 159 SHTS

CITY DWG NO:
35001

CADD DWG FILE NO : K:\BBI-AS\I17.DWG
FILE DATE-OPERATOR:

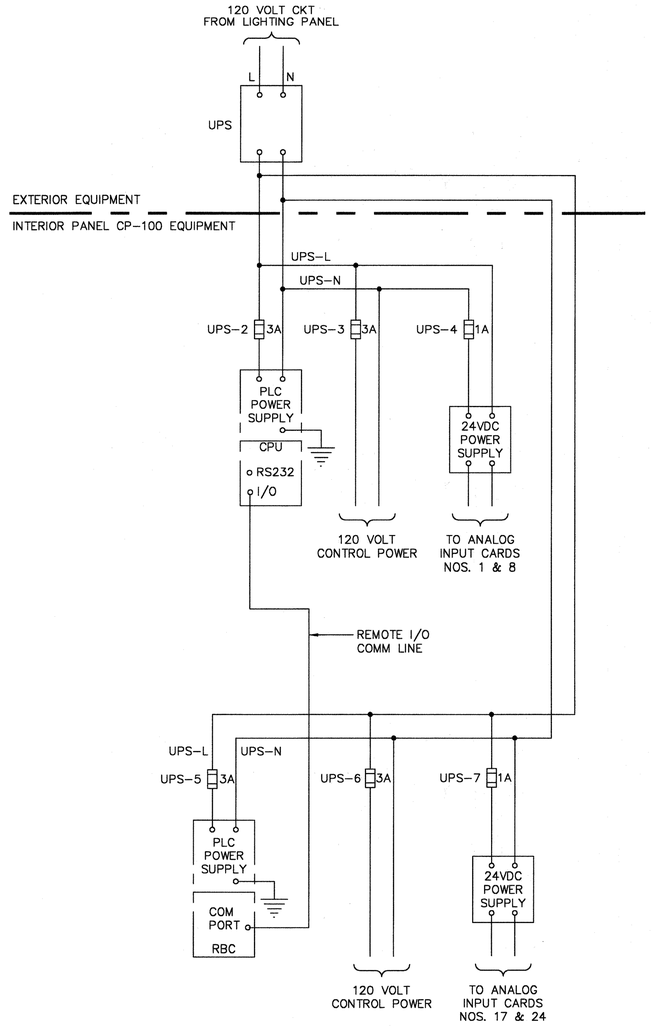

CONTROL POWER & COMMUNICATIONS
WIRING DIAGRAM

REV NO	DESCRIPTION	APP'D	DATE

SEAL

AS-BUILT
2/25/02

SEAL

STATE OF TEXAS
JESSE M. CARR III
52288
REGISTERED
PROFESSIONAL
ENGINEER
2-24-99

intellex CORPORATION
CONTROL SYSTEMS ENGINEERS
11230 WILCREST GREEN Houston, Texas 77042

CH2M HILL
7600 West Tidwell Road, Suite 400
Houston Tx 77040
713.462.0161

Binkley & Barfield, Inc.
Consulting Engineers
1710 Seamist Drive Houston, Texas 77008

ALMEDA SIMS
BIOSOLIDS
DRYER REHABILITATION

CIP NO 0298-05-3
FILE NO: 4289-4

WIRING SCHEMATIC DIAGRAM
PLC POWER AND COMMUNICATIONS
DRYER BUILDING

CITY OF HOUSTON
DEPARTMENT OF PUBLIC WORKS AND ENGINEERING
ENGINEERING, CONSTRUCTION AND REAL ESTATE GROUP

SECTION APPROVALS

WATER ENGINEERING

TRAFFIC AND SIGNAL ENGINEERING

Hamid Jawsek 2-25-99
WASTEWATER ENGINEERING

STREET & BRIDGE ENGINEERING

STORMWATER ENGINEERING

Anthony Greco 3/2/99
CONSTRUCTION

Zia Mahmood 2/25/99

OTHER DEPARTMENTS

PLANNING AND DEVELOPMENT

SPONSOR DEPARTMENT

Herbert D. Lum 3-2-99
CITY ENGINEER DATE

DIRECTOR OF PUBLIC WORKS AND ENGINEERING DATE 3/8/99

SUBMITTED:
SCALE: NONE
NONE
DATE:1/12/99
SURVEY BY: N/A
F B NO:

DESIGNED BY: JMC
DRAWN BY: RDF
DWG. NO. : I17
SHT NO 33 of 159 SHTS
CITY DWG NO:
35001

ORIGINAL SCALE IN INCHES
FOR REDUCED PLANS
0 1 2 3

CADD DWG FILE NO : K:\BBI-AS\I18.DWG
FILE DATE--OPERATOR:

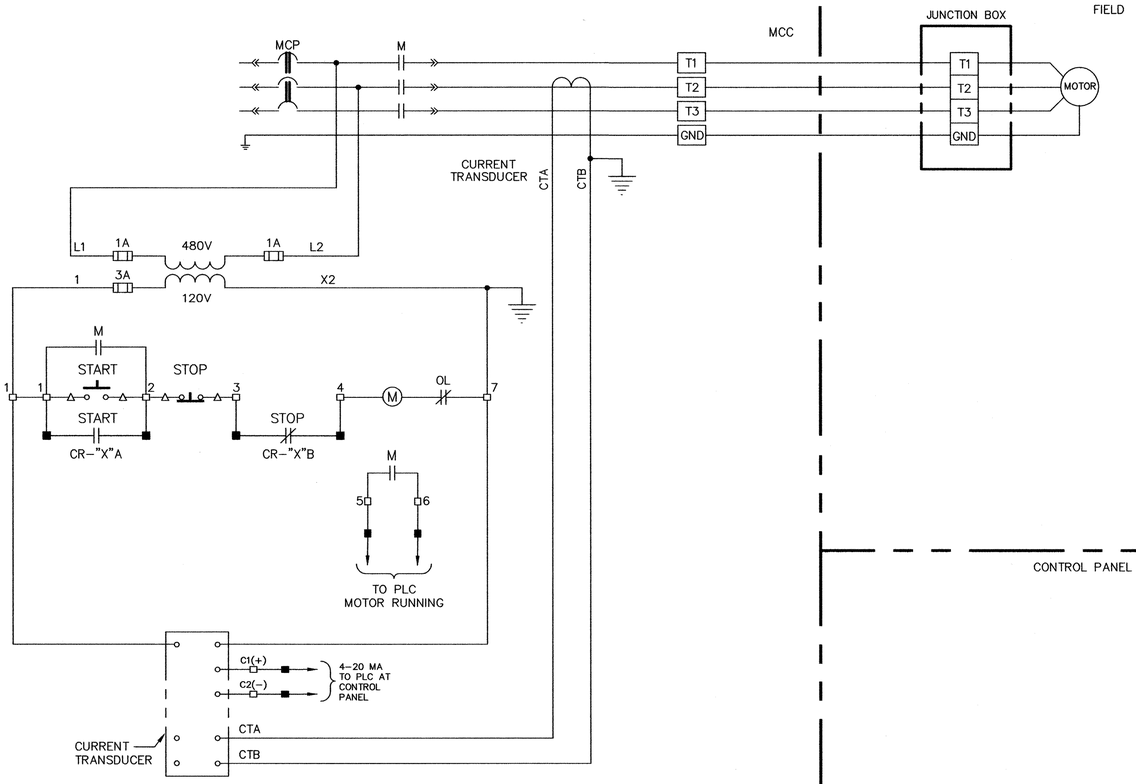

MOTOR CONTROL SCHEMATIC

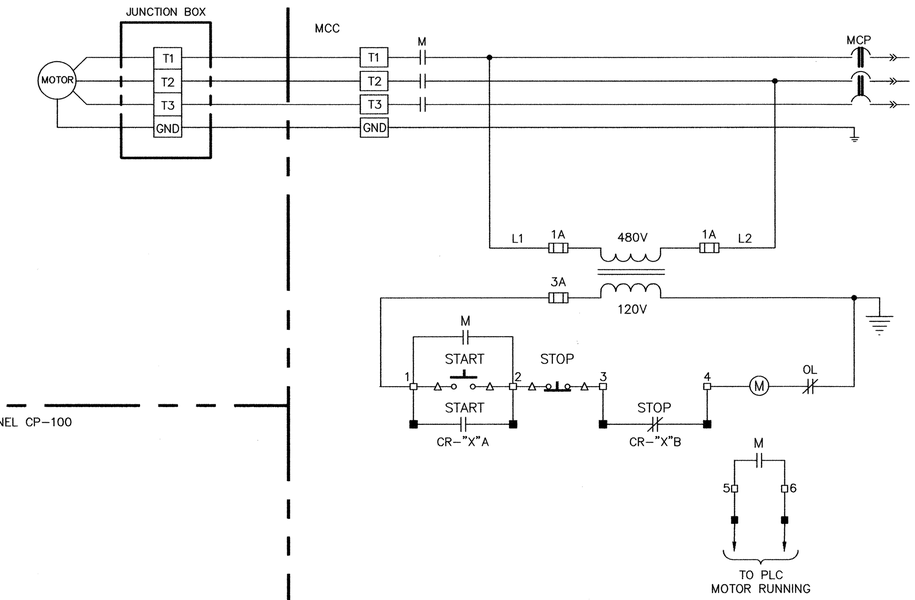

MOTOR CONTROL SCHEMATIC WITH CURRENT TRANSDUCER

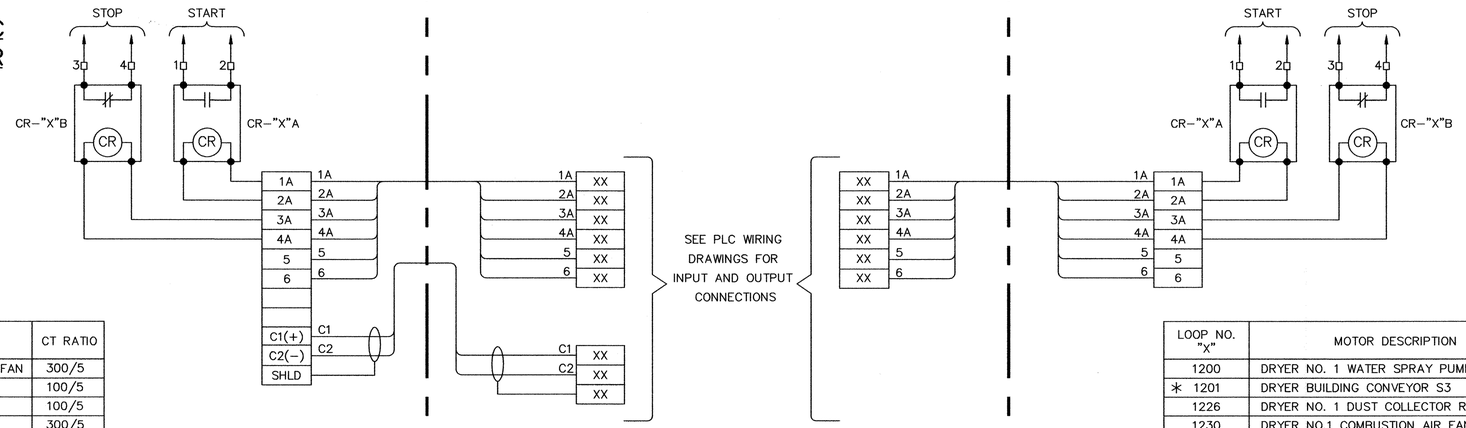

LOOP NO. "X"	MOTOR DESCRIPTION	CT RATIO
1223	DRYER NO. 1 INDUCED DRAFT FAN	300/5
1303	DRYER NO. 1 CAGE MILL	100/5
1313	DRYER NO. 1 MIXER	100/5
1353	DRYER NO. 1 VAPOR FAN	300/5
2223	DRYER NO. 2 INDUCED DRAFT FAN	300/5
2303	DRYER NO. 2 CAGE MILL	100/5
2313	DRYER NO. 2 MIXER	100/5
2353	DRYER NO. 2 VAPOR FAN	300/5

LEGEND

- △ DEVICE OR FIELD TERMINAL LOCATED AT MOTOR
- ✳ DEVICE OR FIELD TERMINAL LOCATED REMOTE
- □ DEVICE OR FIELD TERMINAL LOCATED AT MCC
- ■ FIELD TERMINAL LOCATED AT PANEL CP100
- ▲ REMOTE TERMINAL
- ● DEVICE TERMINAL NO.
- ◆ PLC INTERFACE TERMINAL

NOTES:

1. UNLESS OTHERWISE INDICATED, ALL DEVICES WITHOUT FURTHER DESIGNATION ARE LOCATED AT THE MOTOR CONTROL CENTER (MCC) IN THE DRYER BUILDING CONTROL ROOM.

LOOP NO. "X"	MOTOR DESCRIPTION
1200	DRYER NO. 1 WATER SPRAY PUMP
✳ 1201	DRYER BUILDING CONVEYOR S3
1226	DRYER NO. 1 DUST COLLECTOR ROTARY VALVE
1230	DRYER NO.1 COMBUSTION AIR FAN
1341	DRYER NO. 1 DRY DIVIDER HYDRAULIC UNIT
1361	DRYER NO. 1 CONVEYOR "E"
1371	DRYER NO. 1 CONVEYOR "A"
2200	DRYER NO. 2 WATER SPRAY PUMP
2226	DRYER NO. 2 DUST COLLECTOR ROTARY VALVE
2230	DRYER NO. 2 COMBUSTION AIR FAN
2341	DRYER NO. 2 DRY DIVIDER HYDRAULIC UNIT
2361	DRYER NO. 2 CONVEYOR "E"
2371	DRYER NO. 2 CONVEYOR "A"

1

ORIGINAL SCALE IN INCHES FOR REDUCED PLANS
0 1 2 3

REV NO	DESCRIPTION	APP'D	DATE
1	AS BUILT DRAWING	DJR	12/01

SEAL — STATE OF TEXAS · DAVID J. ROSS · 68267 · REGISTERED PROFESSIONAL ENGINEER

SEAL — AS-BUILT · 1/25/02

intellex CORPORATION
CONTROL SYSTEMS ENGINEERS
11230 WILCREST GREEN Houston, Texas 77042

CH2M HILL
7600 West Tidwell Road, Suite 400
Houston Tx 77040
713.462.0161

Binkley & Barfield, Inc.
Consulting Engineers
1710 Seamist Drive Houston, Texas 77008

ALMEDA SIMS
BIOSOLIDS
DRYER REHABILITATION

CIP NO 0298-05-3
FILE NO: 4289-4

WIRING DIAGRAM
MOTOR CONTROL SCHEMATIC
BIOSOLIDS DRYER BUILDING

CITY OF HOUSTON

DEPARTMENT OF PUBLIC WORKS AND ENGINEERING
ENGINEERING, CONSTRUCTION AND REAL ESTATE GROUP

SECTION APPROVALS

WATER ENGINEERING
TRAFFIC AND SIGNAL ENGINEERING
WASTEWATER ENGINEERING
STREET & BRIDGE ENGINEERING
STORMWATER ENGINEERING
CONSTRUCTION

OTHER DEPARTMENTS

PLANNING AND DEVELOPMENT
SPONSOR DEPARTMENT

CITY ENGINEER — DATE
DIRECTOR OF PUBLIC WORKS AND ENGINEERING — DATE

SUBMITTED:
SCALE: NONE
NONE
DATE: 1/12/99
SURVEY BY: N/A
F B NO:

DESIGNED BY: JMC
DRAWN BY: RDF
DWG. NO. : I18
SHT NO 34 of 159 SHTS

CITY DWG NO: 35001

CADD DWG FILE NO : K:\RBI-AS\118.DWG
FILE DATE: OPERATOR:

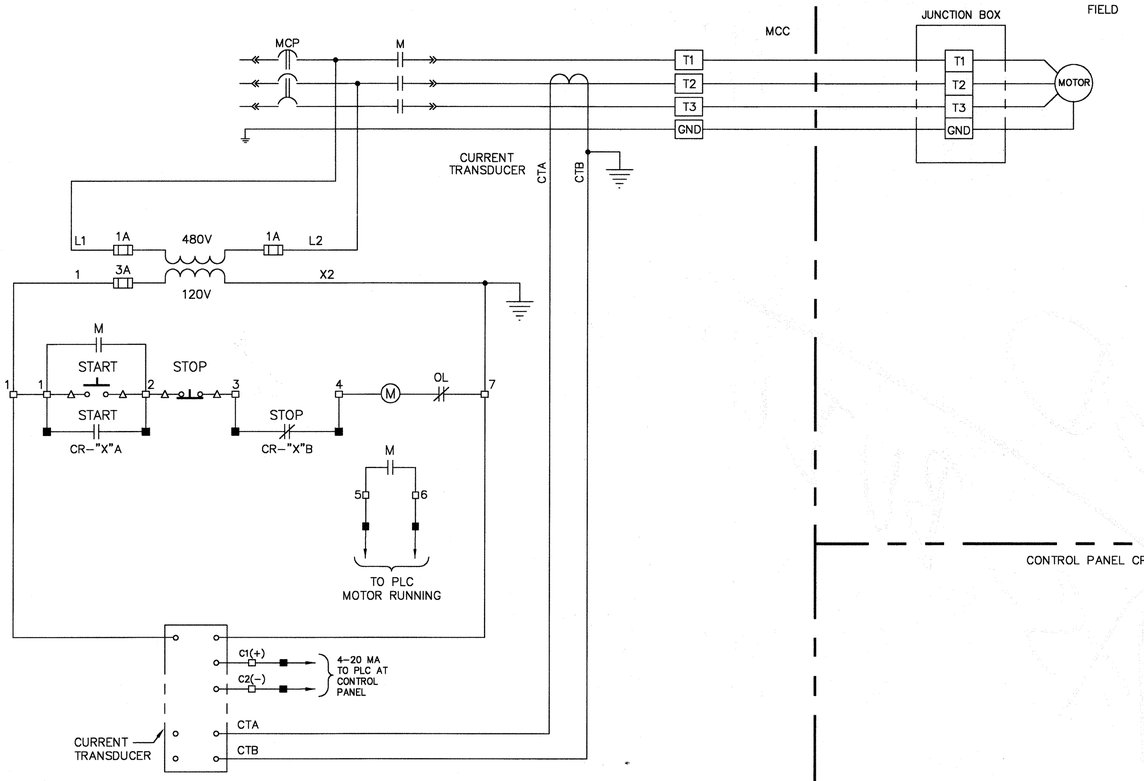

MOTOR CONTROL SCHEMATIC WITH CURRENT TRANSDUCER

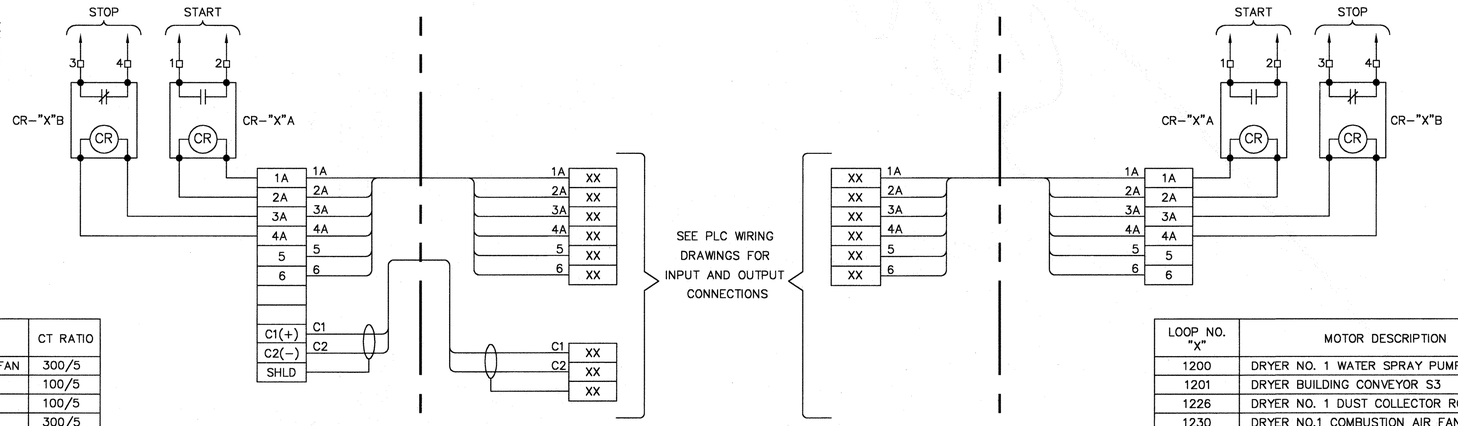

LOOP NO. "X"	MOTOR DESCRIPTION	CT RATIO
1223	DRYER NO. 1 INDUCED DRAFT FAN	300/5
1303	DRYER NO. 1 CAGE MILL	100/5
1313	DRYER NO. 1 MIXER	100/5
1353	DRYER NO. 1 VAPOR FAN	300/5
2223	DRYER NO. 2 INDUCED DRAFT FAN	300/5
2303	DRYER NO. 2 CAGE MILL	100/5
2313	DRYER NO. 2 MIXER	100/5
2353	DRYER NO. 2 VAPOR FAN	300/5

LEGEND

- △ DEVICE OR FIELD TERMINAL LOCATED AT MOTOR
- ✱ DEVICE OR FIELD TERMINAL LOCATED REMOTE
- □ DEVICE OR FIELD TERMINAL LOCATED AT MCC
- ■ FIELD TERMINAL LOCATED AT PANEL CP100
- ▲ REMOTE TERMINAL
- ● DEVICE TERMINAL NO.
- ◆ PLC INTERFACE TERMINAL

NOTES:

1. UNLESS OTHERWISE INDICATED, ALL DEVICES WITHOUT FURTHER DESIGNATION ARE LOCATED AT THE MOTOR CONTROL CENTER (MCC) IN THE DRYER BUILDING CONTROL ROOM.

CONTROL PANEL CP–100

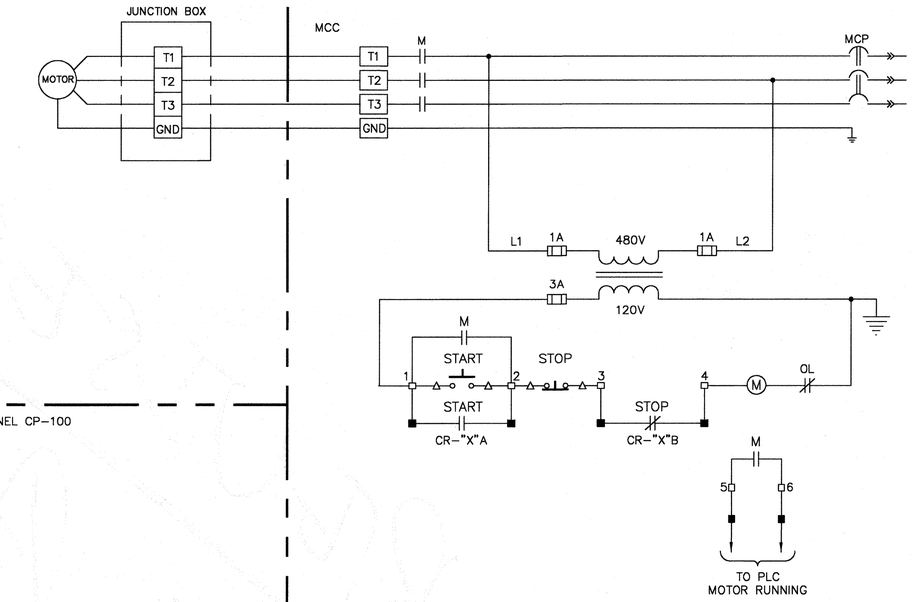

MOTOR CONTROL SCHEMATIC

LOOP NO. "X"	MOTOR DESCRIPTION
1200	DRYER NO. 1 WATER SPRAY PUMP
1201	DRYER BUILDING CONVEYOR S3
1226	DRYER NO. 1 DUST COLLECTOR ROTARY VALVE
1230	DRYER NO.1 COMBUSTION AIR FAN
1341	DRYER NO. 1 DRY DIVIDER HYDRAULIC UNIT
1361	DRYER NO. 1 CONVEYOR "E"
1371	DRYER NO. 1 CONVEYOR "A"
1200	DRYER NO. 1 WATER SPRAY PUMP
1226	DRYER NO. 1 DUST COLLECTOR ROTARY VALVE
1230	DRYER NO.1 COMBUSTION AIR FAN
1341	DRYER NO. 1 DRY DIVIDER HYDRAULIC UNIT
1361	DRYER NO. 1 CONVEYOR "E"
1371	DRYER NO. 1 CONVEYOR "A"

ORIGINAL SCALE IN INCHES FOR REDUCED PLANS
0 1 2 3

REV NO	DESCRIPTION	APP'D	DATE

SEAL

SEAL — STATE OF TEXAS — JESSE M. CARR III — 52288 — REGISTERED PROFESSIONAL ENGINEER — 2-24-99

intellex CORPORATION
CONTROL SYSTEMS ENGINEERS
11230 WILCREST GREEN Houston, Texas 77042

CH2M HILL
7600 West Tidwell Road, Suite 400
Houston Tx 77040
713.462.0161

Binkley & Barfield, Inc.
Consulting Engineers
1710 Seamist Drive Houston, Texas 77008

ALMEDA SIMS
BIOSOLIDS
DRYER REHABILITATION

CIP NO 0298-05-3
FILE NO: 4289-4

WIRING DIAGRAM
MOTOR CONTROL SCHEMATIC
BIOSOLIDS DRYER BUILDING

CITY OF HOUSTON
DEPARTMENT OF PUBLIC WORKS AND ENGINEERING
ENGINEERING, CONSTRUCTION AND REAL ESTATE GROUP

SECTION APPROVALS

WATER ENGINEERING — TRAFFIC AND SIGNAL ENGINEERING

WASTEWATER ENGINEERING 2-25-99 — STREET & BRIDGE ENGINEERING

STORMWATER ENGINEERING — CONSTRUCTION 3/2/99

3/1/99

OTHER DEPARTMENTS

PLANNING AND DEVELOPMENT — SPONSOR DEPARTMENT

CITY ENGINEER 3-2-99 DATE

DIRECTOR OF PUBLIC WORKS AND ENGINEERING 3/1/99 DATE

SUBMITTED:
SCALE: NONE
NONE
DATE:1/12/99
SURVEY BY: N/A
F B NO:

DESIGNED BY: JMC
DRAWN BY: RDF
DWG. NO. : 118
SHT NO 34 of 159 SHTS

CITY DWG NO:
35001

CADD DWG FILE NO : K:\BBI-AS\119.DWG
FILE DATE--OPERATOR

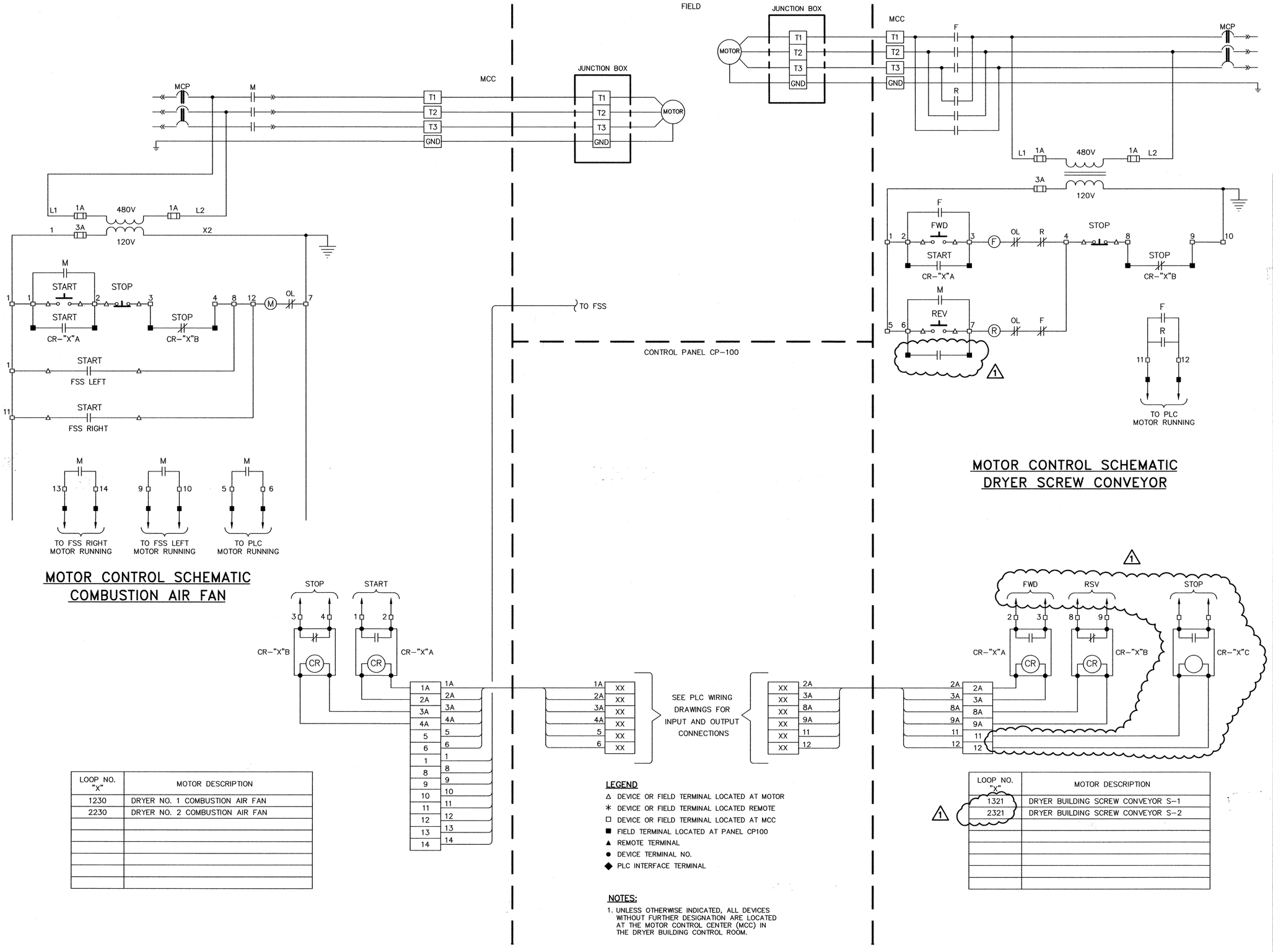

MOTOR CONTROL SCHEMATIC
COMBUSTION AIR FAN

LOOP NO. "X"	MOTOR DESCRIPTION
1230	DRYER NO. 1 COMBUSTION AIR FAN
2230	DRYER NO. 2 COMBUSTION AIR FAN

SEE PLC WIRING DRAWINGS FOR INPUT AND OUTPUT CONNECTIONS

LEGEND

- △ DEVICE OR FIELD TERMINAL LOCATED AT MOTOR
- ✳ DEVICE OR FIELD TERMINAL LOCATED REMOTE
- □ DEVICE OR FIELD TERMINAL LOCATED AT MCC
- ■ FIELD TERMINAL LOCATED AT PANEL CP100
- ▲ REMOTE TERMINAL
- ● DEVICE TERMINAL NO.
- ◆ PLC INTERFACE TERMINAL

NOTES:

1. UNLESS OTHERWISE INDICATED, ALL DEVICES WITHOUT FURTHER DESIGNATION ARE LOCATED AT THE MOTOR CONTROL CENTER (MCC) IN THE DRYER BUILDING CONTROL ROOM.

MOTOR CONTROL SCHEMATIC
DRYER SCREW CONVEYOR

LOOP NO. "X"	MOTOR DESCRIPTION
1321	DRYER BUILDING SCREW CONVEYOR S–1
2321	DRYER BUILDING SCREW CONVEYOR S–2

REV NO	DESCRIPTION	APP'D	DATE
1	AS BUILT DRAWING	DJR	12/01

SEAL
STATE OF TEXAS
DAVID J. ROSS
68267
REGISTERED PROFESSIONAL ENGINEER

SEAL
AS-BUILT
1/25/02

intellex CORPORATION
CONTROL SYSTEMS ENGINEERS
11230 WILCREST GREEN Houston, Texas 77042

CH2M HILL
7600 West Tidwell Road, Suite 400
Houston Tx 77040
713.462.0161

Binkley & Barfield, Inc.
Consulting Engineers
1710 Seamist Drive Houston, Texas 77008

ALMEDA SIMS
BIOSOLIDS
DRYER REHABILITATION

CIP NO 0298–05–3
FILE NO: 4289–4

WIRING DIAGRAM
MOTOR CONTROL SCHEMATIC
BIOSOLIDS DRYER BUILDING

CITY OF HOUSTON
DEPARTMENT OF PUBLIC WORKS AND ENGINEERING
ENGINEERING, CONSTRUCTION AND REAL ESTATE GROUP

SECTION APPROVALS

WATER ENGINEERING
TRAFFIC AND SIGNAL ENGINEERING
WASTEWATER ENGINEERING
STREET & BRIDGE ENGINEERING
STORMWATER ENGINEERING
CONSTRUCTION

OTHER DEPARTMENTS

PLANNING AND DEVELOPMENT
SPONSOR DEPARTMENT

CITY ENGINEER — DATE
DIRECTOR OF PUBLIC WORKS AND ENGINEERING — DATE

SUBMITTED:
SCALE: NONE
NONE
DATE: 1/12/99
SURVEY BY: N/A
F B NO:

DESIGNED BY: JMC
DRAWN BY: RDF
DWG. NO. : I19
SHT NO 35 of 159 SHTS
CITY DWG NO: 35001

ORIGINAL SCALE IN INCHES FOR REDUCED PLANS
0 1 2 3

CADD DWG FILE NO : K:\BBI-AS\I19.DWG
PLT DATE-OPERATOR:

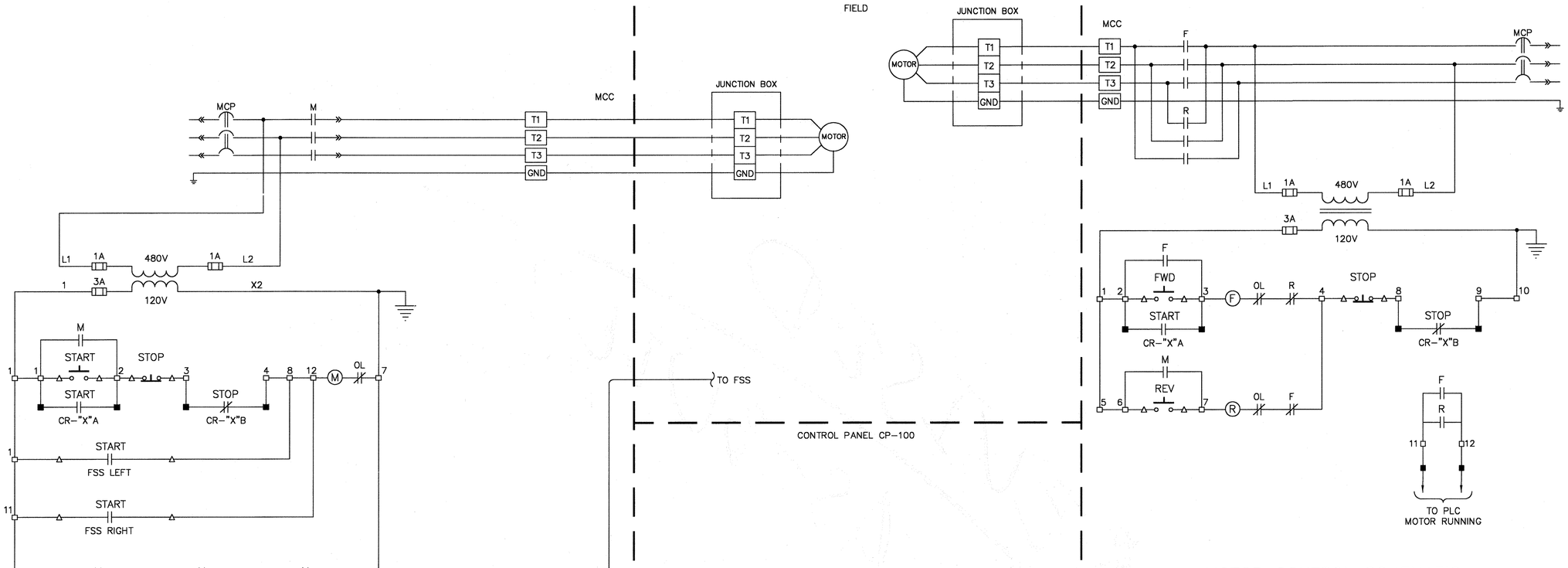

MOTOR CONTROL SCHEMATIC
DRYER SCREW CONVEYOR

MOTOR CONTROL SCHEMATIC
COMBUSTION AIR FAN

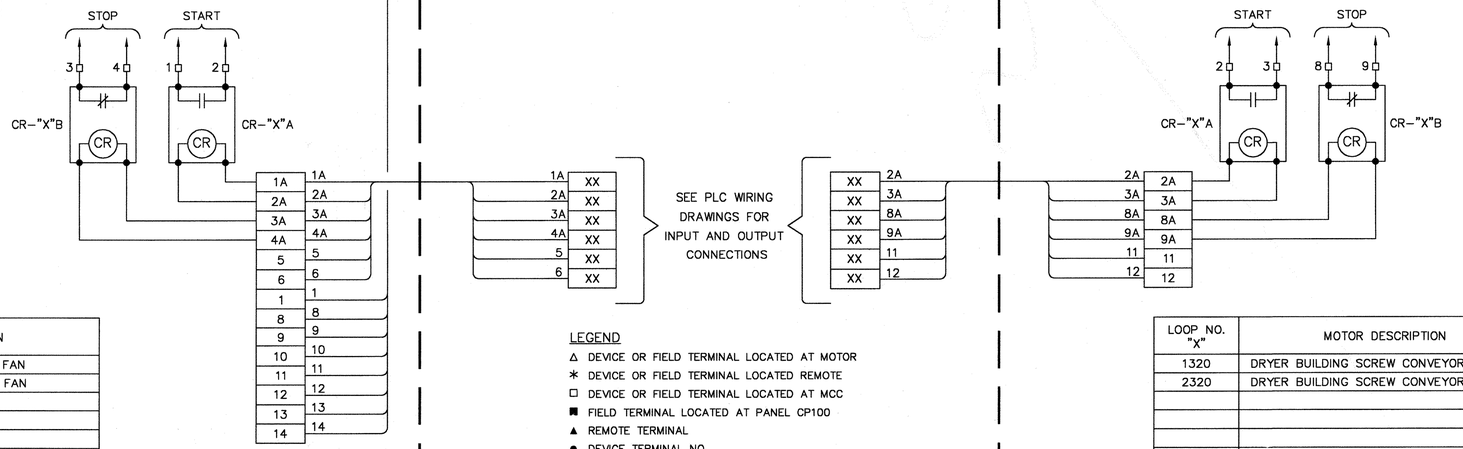

LOOP NO. "X"	MOTOR DESCRIPTION
1230	DRYER NO. 1 COMBUSTION AIR FAN
2230	DRYER NO. 2 COMBUSTION AIR FAN

LOOP NO. "X"	MOTOR DESCRIPTION
1320	DRYER BUILDING SCREW CONVEYOR S–1
2320	DRYER BUILDING SCREW CONVEYOR S–2

LEGEND

- △ DEVICE OR FIELD TERMINAL LOCATED AT MOTOR
- ✱ DEVICE OR FIELD TERMINAL LOCATED REMOTE
- □ DEVICE OR FIELD TERMINAL LOCATED AT MCC
- ■ FIELD TERMINAL LOCATED AT PANEL CP100
- ▲ REMOTE TERMINAL
- ● DEVICE TERMINAL NO.
- ◆ PLC INTERFACE TERMINAL

NOTES:

1. UNLESS OTHERWISE INDICATED, ALL DEVICES WITHOUT FURTHER DESIGNATION ARE LOCATED AT THE MOTOR CONTROL CENTER (MCC) IN THE DRYER BUILDING CONTROL ROOM.

ORIGINAL SCALE IN INCHES FOR REDUCED PLANS
0 1 2 3

REV NO	DESCRIPTION	APP'D	DATE

SEAL

SEAL
STATE OF TEXAS
JESSE M. CARR III
52288
REGISTERED PROFESSIONAL ENGINEER
2-26-99

intellex CORPORATION
CONTROL SYSTEMS ENGINEERS
11230 WILCREST GREEN Houston, Texas 77042

CH2M HILL
7600 West Tidwell Road, Suite 400
Houston Tx 77040
713.462.0161

Binkley & Barfield, Inc.
Consulting Engineers
1710 Seamist Drive Houston, Texas 77008

ALMEDA SIMS
BIOSOLIDS
DRYER REHABILITATION

CIP NO 0298-05-3
FILE NO: 4289-4

WIRING DIAGRAM
MOTOR CONTROL SCHEMATIC
BIOSOLIDS DRYER BUILDING

CITY OF HOUSTON
DEPARTMENT OF PUBLIC WORKS AND ENGINEERING
ENGINEERING, CONSTRUCTION AND REAL ESTATE GROUP

SECTION APPROVALS

WATER ENGINEERING
TRAFFIC AND SIGNAL ENGINEERING
Harold Janssen 2-25-99
WASTEWATER ENGINEERING
STREET & BRIDGE ENGINEERING
STORMWATER ENGINEERING
Audrey Queen 3/5/99
CONSTRUCTION
Zia Kabir 2/25/99

OTHER DEPARTMENTS

PLANNING AND DEVELOPMENT
SPONSOR DEPARTMENT
Herbert D. Lum 3-2-99
CITY ENGINEER DATE
DIRECTOR OF PUBLIC WORKS AND ENGINEERING DATE 3/5/99

SUBMITTED:
SCALE: NONE
NONE
DATE:1/12/99
SURVEY BY: N/A
F B NO:

DESIGNED BY: JMC
DRAWN BY: RDF
DWG. NO. : I19
SHT NO 35 of 159 SHTS

CITY DWG NO:
35001

CADD DWG FILE NO : K:\BBI-ASV20.DWG
FILE DATE-OPERATOR:

FURNACE NO. 1 LEFT BURNER FSS CABINET

FIELD

TO SERVICE PANEL XXXX CKT BKR XXX

1180-P1

POWER ON/OFF

TB1

E110 - FLAME MONITOR

LEFT BURNER FLAME SCANNER BE-1180

1180-S1

E300 - EXPANSION MODULE

FSS CABINET FAN WITH REPLACEABLE FILTER ELEMENT

FAN THERMOSTAT

HIGH TEMPERATURE

FSS HIGH TEMP ALARM

TO IGNITION TRANSFORMERS

1180-C2

TO FAN MOTOR STARTER

1231-C6

FAN AUTO-ON

PILOT IGNITION

MAIN FLAME

BURNER ON/OFF

PURGE BYPASS

ALARM HORN

OPERATING RELAY

1180-C1

TO RIGHT BURNER FSS

1190-C1

FROM RIGHT BURNER FSS

INSTRUMENT AIR LOW PRESSURE PSL-1110

AUXILIARY LIMIT #1

FUEL GAS HIGH PRESSURE PSH-1123

FUEL GAS LOW PRESSURE PSL-1122

1110-C1

1123-C1

1122-C1

1200-C1

1231-C4

1105-C1

COMBUSTION AIR LOW FLOW FSL-1105

AFS

COMBUSTION AIR FAN STARTER INTERLOCK

DRYER PLC INTERLOCK (SEE NOTE 1)

1101-C4

1146-C1

1102-C4

PURGE LIMIT SWITCH ZS-1102

LOW FIRE GAS VALVE LIMIT SWITCH ZS-1146

LOW FIRE AIR DAMPER LIMIT SWITCH ZS-1101

1104-C1

1142-C2

1141-C2

1144-C1

BURNER GAS COCK LIMIT SWITCH ZS-1144

2GCS

GAS VALVE 1 LIMIT SWITCH ZS-1141

1VGS

GAS VALVE 2 LIMIT SWITCH ZS-1142

2VGS

AIR DIFFERENTIAL PRESSURE LOW PDSL-1104

ADS

1152-C1

1151-C1

1153-C1

PILOT GAS VENT VALVE SSV-1153

VPV

PILOT GAS VALVE 1 SSV-1151

1VGP

PILOT GAS VALVE 2 SSV-1152

2VGP

1142-C1

1141-C1

1143-C1

GAS VENT VALVE SSV-1143

VGV

GAS VALVE 1 SSV-1141

1VG

GAS VALVE 2 SSV-1142

2VG

1101-C2

1147-C1

1102-C2

PURGE AIR SOLN VALVE CR-1102A

SEE DWG I-24 FOR AIR DAMPER CONTROL WIRING

LOW FIRE GAS SOLN VALVE SV-1147

LVG

LOW FIRE AIR SOLN VALVE CR-1101A

SEE DWG I-24 FOR AIR DAMPER CONTROL WIRING

NOTES:

1. THE DRYER PLC INTERLOCK WILL BE CLOSED WHEN THE SYSTEM TEMPERATURE IS NOT HIGH, THE VAPOR FAN IS ON, AND THE I.D. FAN IS ON
2. THE PURGE BYPASS RELAY IS USED TO SATISFY THE FLAME SAFETY SYSTEM WHEN THE OTHER BURNER OF THE FURNACE IS OPERATING.
3. THE OPERATING RELAY IS USED TO INTERLOCK THE FLAME SAFETY SYSTEM OF THE OTHER BURNER OF THE FURNACE WHEN THIS BURNER IS PROPERLY OPERATING.
4. THE PURGE BYPASS RELAY SHALL BE A POTTER-BRUMFIELD KRPA11AN120 DPDT 120 VAC RELAY WITH INTEGRAL INDICATING LIGHT AND MOUNTING SOCKET OR APPROVED EQUAL.
5. THE OPERATING RELAY SHALL BE A POTTER-BRUMFIELD KHAU17A11N 4PDT 120 VAC RELAY WITH INTEGRAL INDICATING LIGHT AND MOUNTING SOCKET OR APPROVED EQUAL.

ORIGINAL SCALE IN INCHES FOR REDUCED PLANS

REV NO	DESCRIPTION	APP'D	DATE

SEAL

AS-BUILT
Darrell Rose
1/25/02

SEAL

STATE OF TEXAS
JESSE M. CARR III
52288
REGISTERED PROFESSIONAL ENGINEER
2-24-99

intellex CORPORATION
CONTROL SYSTEMS ENGINEERS
11230 WILCREST GREEN Houston, Texas 77042

CH2M HILL
7600 West Tidwell Road, Suite 400
Houston Tx 77040
713.462.0161

Binkley & Barfield, Inc.
Consulting Engineers
1710 Seamist Drive Houston, Texas 77008

ALMEDA SIMS
BIOSOLIDS
DRYER REHABILITATION

CIP NO 0298-05-3
FILE NO: 4289-4

WIRING SCHEMATIC DIAGRAM
BIOSOLIDS DRYER NO.1
FLAME SAFETY SYSTEM

CITY OF HOUSTON
DEPARTMENT OF PUBLIC WORKS AND ENGINEERING
ENGINEERING, CONSTRUCTION AND REAL ESTATE GROUP

SECTION APPROVALS

WATER ENGINEERING

TRAFFIC AND SIGNAL ENGINEERING

WASTEWATER ENGINEERING
Hamid Yousefi 2-25-99

STREET & BRIDGE ENGINEERING

STORMWATER ENGINEERING

CONSTRUCTION
Courtney Queen 3/1/99

3/1/99

OTHER DEPARTMENTS

PLANNING AND DEVELOPMENT

SPONSOR DEPARTMENT

CITY ENGINEER
3-2-99
DATE

DIRECTOR OF PUBLIC WORKS AND ENGINEERING
3/5/99
DATE

SUBMITTED:
SCALE: NONE
NONE
DATE:12/4/98
SURVEY BY: N/A
F B NO:

DESIGNED BY: JMC
DRAWN BY: JFB
DWG. NO. : 120
SHT NO 36 of 159 SHTS

CITY DWG NO:
35001

CADD DWG FILE NO : K:\BBI-AS\V21.DWG
FILE DATE-OPERATOR:

FURNACE NO. 1 RIGHT BURNER FSS CABINET

FIELD

TO SERVICE PANEL XXXX CKT BKR XXX

1190-P1

PL — R — POWER ON/OFF

TB1

BLK — 1 FUSE — PWR
MH — 2 FUSE
3 FUSE — TS
4 FUSE
PWR — 5 — L1
WHT — 6
7 — FAN
8 — HT
9
PL — 10 — L2
GRN — 11 — GRN

E110 - FLAME MONITOR

S2 RED — RED A — A 8 — 8 7 — 7 6 — 5 — 5 13 — 13 12 — 12 G — GRN

X — X, P — P, D — D, M — M, 3 — 3, BLK — L2, L2 — L1, BLK — 11, 10 — 10

RIGHT BURNER FLAME SCANNER BE-1190 — 1190-S1

E300 - EXPANSION MODULE

19 20 21 22 23 24 25 26 27 — 20, 3, 27 — L2, 33, 32, 31 — L2 35 34 33 32 31 30 29 28

FSS CABINET FAN WITH REPLACEABLE FILTER ELEMENT

FAN — FAN — FAN THERMOSTAT — TS — FAN

HIGH TEMPERATURE — HT — R — HT — FSS HIGH TEMP ALARM

TO IGNITION TRANSFORMERS — 1190-C2

TO FAN MOTOR STARTER — 1231-C7

FAN AUTO-ON — ON — MH — AUTO — N — MS

PILOT IGNITION — 1-57 — A — 1-39

MAIN FLAME — 1-58 — A — 1-47

1-59 — BURNER ON/OFF — A

TB1

10	1 FUSE	1-1
20	2	1-2
13	3	1-3
3	4	1-4
	5	1-5
27	6	1-6
	7	1-7
31	8	1-8
	9	1-9
32	10	1-10
	11	1-11
33	12	1-12
	13	1-13
	14	1-14
	15	1-15
	16	1-16
P	17	1-17
M	18	1-18
	19	1-19
	19A	1-19A
	20A	1-20A
	20	1-20
	21	1-21
D	22	1-22
	23	1-23
	23A	1-23A
	23B	1-23B
	24A	1-24A
	24B	1-24B
	24	1-24
	25	1-25
8	26	1-26
	27	1-27
	28	1-28
	29	1-29
	30	1-30
	31	1-31
	32	1-32
A	33	1-33
L2	34	1-34
MS	35 FUSE	1-35
	36	1-36
5	37 FUSE	1-37
	38	1-38
	39	1-39
	40	1-40
	41	1-41
	42	1-42
	43	1-43
	44	1-44
7	45 FUSE	1-45
	45A	1-45A
	46A	1-46A
	46	1-46
	47	1-47
	48	1-48
	49	1-49
	50	1-50
12	51 FUSE	1-51
	52	1-52
	52A	1-52A
	52B	1-52B
	53	1-53
	54	1-54
X	55 FUSE	1-55
	55A	1-55A
	55B	1-55B
	55C	1-55C
	55D	1-55D
	56A	1-56A
	56B	1-56B
	57	1-57
	58	1-58
L2	59	1-59

PURGE BYPASS — C

ALARM HORN

OPERATING RELAY — C

1-55D, 1-55, 1-55A — 1-19A, 1-20A, 1-23A, 1-23A, 1-52A, 1-52B

1190-C1 — TO LEFT BURNER FSS

1180-C1 — FROM LEFT BURNER FSS

INSTRUMENT AIR LOW PRESSURE PSL-1110 — 1-3 — 1-4 — AUXILIARY LIMIT #1

FUEL GAS HIGH PRESSURE PSH-1123 — 1-7 — 1-8

FUEL GAS LOW PRESSURE PSL-1122 — 1-9 — 1-10

1110-C2

1123-C2

1122-C2

1200-C2

1231-C5

1105-C2

COMBUSTION AIR LOW FLOW FSL-1105 — 1-17 — 1-18 — AFS

COMBUSTION AIR FAN STARTER INTERLOCK — 1-15 — 1-16

DRYER PLC INTERLOCK (SEE NOTE 1) — 1-11 — 1-12

1101-C5

1166-C1

1102-C5

PURGE LIMIT SWITCH ZS-1102 — 1-23 — 1-24

LOW FIRE GAS VALVE LIMIT SWITCH ZS-1166 — 1-21 — 1-22

LOW FIRE AIR DAMPER LIMIT SWITCH ZS-1101 — 1-19 — 1-20

1104-C2

1162-C2

1161-C2

1164-C1

BURNER GAS COCK LIMIT SWITCH ZS-1164 — 1-31A — 1-31B — 2GCS

GAS VALVE 1 LIMIT SWITCH ZS-1161 — 1-29 — 1-30 — 1VGS

GAS VALVE 2 LIMIT SWITCH ZS-1162 — 1-27 — 1-28 — 2VGS

AIR DIFFERENTIAL PRESSURE LOW PDSL-1104 — 1-25 — 1-26 — ADS

1172-C1

1171-C1

1173-C1

PILOT GAS VENT VALVE SSV-1173 — 1-43 — 1-44 — VPV

PILOT GAS VALVE 1 SSV-1171 — 1-41 — 1-42 — 1VGP

PILOT GAS VALVE 2 SSV-1172 — 1-39 — 1-40 — 2VGP

1162-C1

1161-C1

1163-C1

GAS VENT VALVE SSV-1163 — 1-49 — 1-50 — VGV

GAS VALVE 1 SSV-1161 — 1-47 — 1-48 — 1VG

GAS VALVE 2 SSV-1162 — 1-45 — 1-46 — 2VG

1101-C3

1167-C1

1102-C3

PURGE AIR SOLN VALVE CR-1102B — 1-55B — CR — 1-55C — SEE DWG I-24 FOR AIR DAMPER CONTROL WIRING

LOW FIRE GAS SOLN VALVE SV-1167 — 1-53 — 1-54 — LVG

LOW FIRE AIR SOLN VALVE CR-1101B — 1-51 — CR — 1-52 — SEE DWG I-24 FOR AIR DAMPER CONTROL WIRING

NOTES:

1. THE DRYER PLC INTERLOCK WILL BE CLOSED WHEN THE SYSTEM TEMPERATURE IS NOT HIGH, THE VAPOR FAN IS ON, AND THE I. D. FAN IS ON
2. THE PURGE BYPASS RELAY IS USED TO SATISFY THE FLAME SAFETY SYSTEM WHEN THE OTHER BURNER OF THE FURNACE IS OPERATING.
3. THE OPERATING RELAY IS USED TO INTERLOCK THE FLAME SAFETY SYSTEM OF THE OTHER BURNER OF THE FURNACE WHEN THIS BURNER IS PROPERLY OPERATING.
4. THE PURGE BYPASS RELAY SHALL BE A POTTER-BRUMFIELD KRPA11AN120 DPDT 120 VAC RELAY WITH INTEGRAL INDICATING LIGHT AND MOUNTING SOCKET OR APPROVED EQUAL.
5. THE OPERATING RELAY SHALL BE A POTTER-BRUMFIELD KHAU17A11N 4PDT 120 VAC RELAY WITH INTEGRAL INDICATING LIGHT AND MOUNTING SOCKET OR APPROVED EQUAL.

ORIGINAL SCALE IN INCHES FOR REDUCED PLANS

0 1 2 3

REV NO	DESCRIPTION	APP'D	DATE

SEAL — AS-BUILT — 6/25/02

SEAL — STATE OF TEXAS — JESSE M. CARR III — 52288 — REGISTERED PROFESSIONAL ENGINEER — 2-24-99

intellex CORPORATION
CONTROL SYSTEMS ENGINEERS
11230 WILCREST GREEN Houston, Texas 77042

CH2M HILL
7600 West Tidwell Road, Suite 400
Houston Tx 77040
713.462.0161

Binkley & Barfield, Inc.
Consulting Engineers
1710 Seamist Drive Houston, Texas 77008

ALMEDA SIMS
BIOSOLIDS
DRYER REHABILITATION

CIP NO 0298-05-3
FILE NO: 4289-4

WIRING SCHEMATIC DIAGRAM
BIOSOLIDS DRYER NO.1
FLAME SAFETY SYSTEM

CITY OF HOUSTON
DEPARTMENT OF PUBLIC WORKS AND ENGINEERING
ENGINEERING, CONSTRUCTION AND REAL ESTATE GROUP

SECTION APPROVALS

WATER ENGINEERING — TRAFFIC AND SIGNAL ENGINEERING

Howard Vassey 3-25-99
WASTEWATER ENGINEERING — STREET & BRIDGE ENGINEERING

STORMWATER ENGINEERING — CONSTRUCTION 3/2/99

3/25/99

OTHER DEPARTMENTS

PLANNING AND DEVELOPMENT — SPONSOR DEPARTMENT

CITY ENGINEER — DATE 3-2-99

DIRECTOR OF PUBLIC WORKS AND ENGINEERING — DATE 3/5/99

SUBMITTED:
SCALE: NONE
NONE
DATE:12/4/98
SURVEY BY: N/A
F B NO:

DESIGNED BY: JMC
DRAWN BY: JFB
DWG. NO. : I21
SHT NO 37 of 159 SHTS
CITY DWG NO: 35001

CADD DWG FILE NO : K:\BBI-ASV122.DWG
FILE DATE-OPERATOR

FURNACE NO. 2 LEFT BURNER FSS CABINET

FIELD

TO SERVICE PANEL XXXX CKT BKR XXX

2180-P1

POWER ON/OFF

TB1

E110 - FLAME MONITOR

LEFT BURNER FLAME SCANNER BE-2180

2180-S1

E300 - EXPANSION MODULE

FSS CABINET FAN WITH REPLACEABLE FILTER ELEMENT

FAN THERMOSTAT

HIGH TEMPERATURE

FSS HIGH TEMP ALARM

TO IGNITION TRANSFORMERS

2180-C2

TO FAN MOTOR STARTER

2231-C6

FAN AUTO-ON

PILOT IGNITION

MAIN FLAME

BURNER ON/OFF

PURGE BYPASS

ALARM HORN

OPERATING RELAY

2180-C1

TO RIGHT BURNER FSS

2190-C1

FROM RIGHT BURNER FSS

INSTRUMENT AIR LOW PRESSURE PSL-2110

AUXILIARY LIMIT #1

FUEL GAS HIGH PRESSURE PSH-2123

FUEL GAS LOW PRESSURE PSL-2122

2110-C1

2123-C1

2122-C1

2200-C1

2231-C4

2105-C1

COMBUSTION AIR LOW FLOW FSL-2105

AFS

COMBUSTION AIR FAN STARTER INTERLOCK

DRYER PLC INTERLOCK (SEE NOTE 1)

2101-C4

2146-C4

2102-C4

PURGE LIMIT SWITCH ZS-2102

LOW FIRE GAS VALVE LIMIT SWITCH ZS-2146

LOW FIRE AIR DAMPER LIMIT SWITCH ZS-2101

2104-C1

2142-C2

2141-C2

2144-C1

BURNER GAS COCK LIMIT SWITCH ZS-2144

2GCS

GAS VALVE 1 LIMIT SWITCH ZS-2141

1VGS

GAS VALVE 2 LIMIT SWITCH ZS-2142

2VGS

AIR DIFFERENTIAL PRESSURE LOW PDSL-2104

ADS

2152-C1

2151-C1

2153-C1

PILOT GAS VENT VALVE SSV-2153

VPV

PILOT GAS VALVE 1 SSV-2151

1VGP

PILOT GAS VALVE 2 SSV-2152

2VGP

2142-C1

2141-C1

2143-C1

GAS VENT VALVE SSV-2143

VGV

GAS VALVE 1 SSV-2141

1VG

GAS VALVE 2 SSV-2142

2VG

2101-C2

2147-C1

2102-C2

PURGE AIR SOLN VALVE CR-2102A

SEE DWG I-24 FOR AIR DAMPER CONTROL WIRING

LOW FIRE GAS SOLN VALVE SV-2147

LVG

LOW FIRE AIR SOLN VALVE CR-2101A

SEE DWG I-24 FOR AIR DAMPER CONTROL WIRING

NOTES:

1. THE DRYER PLC INTERLOCK WILL BE CLOSED WHEN THE SYSTEM TEMPERATURE IS NOT HIGH, THE VAPOR FAN IS ON, AND THE I.D. FAN IS ON
2. THE PURGE BYPASS RELAY IS USED TO SATISFY THE FLAME SAFETY SYSTEM WHEN THE OTHER BURNER OF THE FURNACE IS OPERATING.
3. THE OPERATING RELAY IS USED TO INTERLOCK THE FLAME SAFETY SYSTEM OF THE OTHER BURNER OF THE FURNACE WHEN THIS BURNER IS PROPERLY OPERATING.
4. THE PURGE BYPASS RELAY SHALL BE A POTTER-BRUMFIELD KRPA11AN120 DPDT 120 VAC RELAY WITH INTEGRAL INDICATING LIGHT AND MOUNTING SOCKET OR APPROVED EQUAL.
5. THE OPERATING RELAY SHALL BE A POTTER-BRUMFIELD KHAU17A11N 4PDT 120 VAC RELAY WITH INTEGRAL INDICATING LIGHT AND MOUNTING SOCKET OR APPROVED EQUAL.

ORIGINAL SCALE IN INCHES FOR REDUCED PLANS

0 1 2 3

REV NO	DESCRIPTION	APP'D	DATE

SEAL

AS-BUILT

Darrell Rea 1/25/02

SEAL

STATE OF TEXAS
JESSE M. CARR III
52288
REGISTERED
PROFESSIONAL
ENGINEER
2-24-99

intellex CORPORATION
CONTROL SYSTEMS ENGINEERS
11230 WILCREST GREEN Houston, Texas 77042

CH2M HILL
7600 West Tidwell Road, Suite 400
Houston Tx 77040
713.462.0161

Binkley & Barfield, Inc.
Consulting Engineers
1710 Seamist Drive Houston, Texas 77008

ALMEDA SIMS
BIOSOLIDS
DRYER REHABILITATION

CIP NO 0298-05-3
FILE NO: 4289-4

WIRING SCHEMATIC DIAGRAM
BIOSOLIDS DRYER NO.2
FLAME SAFETY SYSTEM

CITY OF HOUSTON

DEPARTMENT OF PUBLIC WORKS AND ENGINEERING
ENGINEERING, CONSTRUCTION AND REAL ESTATE GROUP

SECTION APPROVALS

WATER ENGINEERING

TRAFFIC AND SIGNAL ENGINEERING

Hamid Lavassani 2-25-99
WASTEWATER ENGINEERING

STREET & BRIDGE ENGINEERING

STORMWATER ENGINEERING

Courtney Pierce 3/2/99
CONSTRUCTION

Jim Mathews 2/25/99

OTHER DEPARTMENTS

PLANNING AND DEVELOPMENT

SPONSOR DEPARTMENT

Herbert Lum 3-2-99
CITY ENGINEER DATE

DIRECTOR OF PUBLIC WORKS AND ENGINEERING 3/1/99 DATE

SUBMITTED:
SCALE: NONE
NONE
DATE:12/4/98
SURVEY BY: N/A
F B NO:

DESIGNED BY: JMC
DRAWN BY: JFB
DWG. NO. : I22
SHT NO 38 of 159 SHTS

CITY DWG NO:
35001

CADD DWG FILE NO : K:\RBI-AS\V23.DWG
FILE DATE-OPERATOR:

FURNACE NO. 2 RIGHT BURNER FSS CABINET

FIELD

TO SERVICE PANEL XXXX CKT BKR XXX

2190-P1

PL — R — POWER ON/OFF

TB1

BLK — 1 FUSE — PWR
MH — 2 FUSE
3 FUSE — TS
4 FUSE
PWR — 5 — L1
WHT — 6
7 — FAN
8 — HT
9
PL — 10 — L2
GRN — 11 — GRN

E110 - FLAME MONITOR

S2 RED, S1 RED, A A, B B, 7 7, 6, 5 5, 13 13, 12 12, G GRN

X X, P P, D D, M M, 3 3, BLK L2, L2 L1, BLK, 10 10

RIGHT BURNER FLAME SCANNER BE-2190 — 2190-S1

E300 - EXPANSION MODULE

19, 20 20, 21, 22, 23, 24, 25, 26, 27 27

L2 L2, 3, 33 33, 32 32, 31 31

FSS CABINET FAN WITH REPLACEABLE FILTER ELEMENT

FAN, FAN

FAN THERMOSTAT — TS — FAN

HIGH TEMPERATURE — HT

FSS HIGH TEMP ALARM — R — HT

TO IGNITION TRANSFORMERS — 2190-C2

TO FAN MOTOR STARTER — 2231-C7

FAN AUTO-ON — DN MH, M AUTO, MS

PILOT IGNITION — 1-57 — A — 1-39

MAIN FLAME — 1-58 — A — 1-47

TB1

1 FUSE — 1-1
10 — 2 — 1-2
20 — 3 — 1-3
13 — 4 — 1-4
3 — 5
6
7 — 1-7
27 — 8 — 1-8
9 — 1-9
31 — 10 — 1-10
11 — 1-11
32 — 12 — 1-12
33 — 13
14 — 1-15
15 — 1-16
16 — 1-17
P — 18 — 1-18
M — 19 — 1-19
19A — 1-19A
20A — 1-20A
20 — 1-20
21 — 1-21
D — 22 — 1-22
23 — 1-23
23A — 1-23A
23B — 1-23B
24A — 1-24A
24B — 1-24B
24 — 1-24
25 — 1-25
B — 26 — 1-26
27 — 1-27
28 — 1-28
29 — 1-29
30 — 1-30
31 — 1-31
32 — 1-32
A — 33 — 1-33
L2 — 34 — 1-34
35 FUSE — 1-35
36 — 1-36
MS — 37 FUSE — 1-37
5 — 38 — 1-38
39 — 1-39
40 — 1-40
41 — 1-41
42 — 1-42
43 — 1-43
44 — 1-44
7 — 45 FUSE — 1-45
45A — 1-45A
46A — 1-46A
46 — 1-46
47 — 1-47
48 — 1-48
49 — 1-49
50 — 1-50
12 — 51 FUSE — 1-51
52 — 1-52
52A — 1-52A
52B — 1-52B
53 — 1-53
54 — 1-54
X — 55 FUSE — 1-55
55A — 1-55A
55B — 1-55B
55C — 1-55C
55D — 1-55D
56A — 1-56A
56B — 1-56B
57 — 1-57
58 — 1-58
L2 — 59 — 1-59

BURNER ON/OFF — 1-59 — A

PURGE BYPASS — C

ALARM HORN

OPERATING RELAY — C

1-55D, 1-55, 1-55A

1-19A, 1-20A, 1-23A, 1-23A, 1-52A, 1-52B

2190-C1 — TO LEFT BURNER FSS

2180-C1 — FROM LEFT BURNER FSS

INSTRUMENT AIR LOW PRESSURE PSL-2110 — 1-3, 1-4 — AUXILIARY LIMIT #1

FUEL GAS HIGH PRESSURE PSH-2123 — 1-7, 1-8

FUEL GAS LOW PRESSURE PSL-2122 — 1-9, 1-10

2110-C2, 2123-C2, 2122-C2, 2200-C2, 2231-C5, 2105-C2

COMBUSTION AIR LOW FLOW FSL-2105 — 1-17, 1-18 — AFS

COMBUSTION AIR FAN STARTER INTERLOCK — 1-15, 1-16

DRYER PLC INTERLOCK (SEE NOTE 1) — 1-11, 1-12

2101-C5, 2166-C1, 2102-C5

PURGE LIMIT SWITCH ZS-2102 — 1-23, 1-24

LOW FIRE GAS VALVE LIMIT SWITCH ZS-2166 — 1-21, 1-22

LOW FIRE AIR DAMPER LIMIT SWITCH ZS-2101 — 1-19, 1-20

2104-C1, 2162-C2, 2161-C2, 2164-C1

BURNER GAS COCK LIMIT SWITCH ZS-2164 — 1-31A, 1-31B — 2GCS

GAS VALVE 1 LIMIT SWITCH ZS-2161 — 1-29, 1-30 — 1VGS

GAS VALVE 2 LIMIT SWITCH ZS-2162 — 1-27, 1-28 — 2VGS

AIR DIFFERENTIAL PRESSURE LOW PDSL-2104 — 1-25, 1-26 — ADS

2172-C1, 2171-C1, 2173-C1

PILOT GAS VENT VALVE SSV-2173 — 1-43, 1-44 — VPV

PILOT GAS VALVE 1 SSV-2171 — 1-41, 1-42 — 1VGP

PILOT GAS VALVE 2 SSV-2172 — 1-39, 1-40 — 2VGP

2162-C1, 2161-C1, 2163-C1

GAS VENT VALVE SSV-2163 — 1-49, 1-50 — VGV

GAS VALVE 1 SSV-2161 — 1-47, 1-48 — 1VG

GAS VALVE 2 SSV-2162 — 1-45, 1-46 — 2VG

2101-C3, 2167-C1, 2102-C3

PURGE AIR SOLN VALVE CR-2102B — 1-55B, CR, 1-55C — SEE DWG I-24 FOR AIR DAMPER CONTROL WIRING

LOW FIRE GAS SOLN VALVE SV-2167 — 1-53, 1-54 — LVG

LOW FIRE AIR SOLN VALVE CR-2101B — 1-51, CR, 1-52 — SEE DWG I-24 FOR AIR DAMPER CONTROL WIRING

NOTES:

1. THE DRYER PLC INTERLOCK WILL BE CLOSED WHEN THE SYSTEM TEMPERATURE IS NOT HIGH, THE VAPOR FAN IS ON, AND THE I. D. FAN IS ON
2. THE PURGE BYPASS RELAY IS USED TO SATISFY THE FLAME SAFETY SYSTEM WHEN THE OTHER BURNER OF THE FURNACE IS OPERATING.
3. THE OPERATING RELAY IS USED TO INTERLOCK THE FLAME SAFETY SYSTEM OF THE OTHER BURNER OF THE FURNACE WHEN THIS BURNER IS PROPERLY OPERATING.
4. THE PURGE BYPASS RELAY SHALL BE A POTTER-BRUMFIELD KRPA11AN120 DPDT 120 VAC RELAY WITH INTEGRAL INDICATING LIGHT AND MOUNTING SOCKET OR APPROVED EQUAL.
5. THE OPERATING RELAY SHALL BE A POTTER-BRUMFIELD KHAU17A11N 4PDT 120 VAC RELAY WITH INTEGRAL INDICATING LIGHT AND MOUNTING SOCKET OR APPROVED EQUAL.

ORIGINAL SCALE IN INCHES FOR REDUCED PLANS
0 1 2 3

REV NO	DESCRIPTION	APP'D	DATE

SEAL — AS-BUILT — Darrell Ross 4/25/02

SEAL — STATE OF TEXAS — JESSE M. CARR III — 52288 — REGISTERED PROFESSIONAL ENGINEER — 2-24-99

intellex CORPORATION
CONTROL SYSTEMS ENGINEERS
11230 WILCREST GREEN Houston, Texas 77042

CH2M HILL
7600 West Tidwell Road, Suite 400
Houston Tx 77040
713.462.0161

Binkley & Barfield, Inc.
Consulting Engineers
1710 Seamist Drive Houston, Texas 77008

ALMEDA SIMS
BIOSOLIDS
DRYER REHABILITATION

CIP NO 0298-05-3
FILE NO: 4289-4

WIRING SCHEMATIC DIAGRAM
BIOSOLIDS DRYER NO.2
FLAME SAFETY SYSTEM

CITY OF HOUSTON
DEPARTMENT OF PUBLIC WORKS AND ENGINEERING
ENGINEERING, CONSTRUCTION AND REAL ESTATE GROUP

SECTION APPROVALS

WATER ENGINEERING — TRAFFIC AND SIGNAL ENGINEERING

Howard Lansdell 2-25-99
WASTEWATER ENGINEERING — STREET & BRIDGE ENGINEERING

STORMWATER ENGINEERING — CONSTRUCTION

Zia Mott 2-24-99

OTHER DEPARTMENTS

PLANNING AND DEVELOPMENT — SPONSOR DEPARTMENT

Herbert R. Lum — 3-2-99
CITY ENGINEER — DATE

DIRECTOR OF PUBLIC WORKS AND ENGINEERING — 3/3/99 DATE

SUBMITTED:
SCALE: NONE
NONE
DATE:12/4/98
SURVEY BY: N/A
F B NO:

DESIGNED BY: JMC
DRAWN BY: JFB
DWG. NO. : 123
SHT NO 39 of 159 SHTS

CITY DWG NO:
35001

CADD DWG FILE NO : K:\BBI-AS\124.DWG
FILE DATE-OPERATOR:

FURNACE NO. 1 FSS COMBUSTION AIR CONTROL CABINET

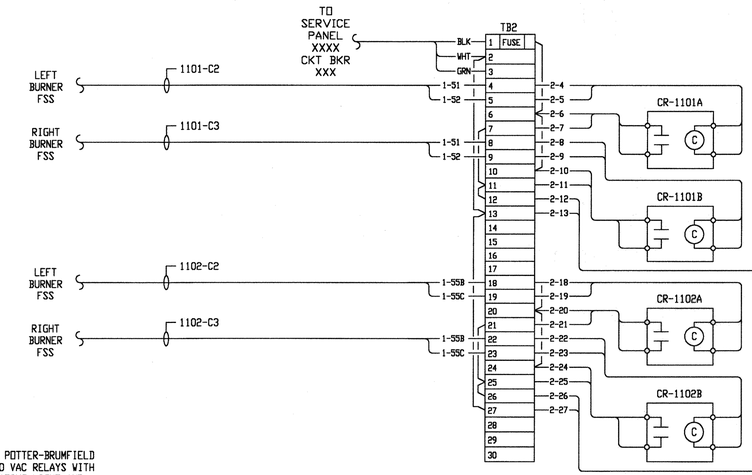

NOTES:
1. ALL RELAYS SHALL BE POTTER-BRUMFIELD KRPA11AN120 DPDT 120 VAC RELAYS WITH WITH INTEGRAL INDICATING LIGHT AND MOUNTING SOCKET OR APPROVED EQUAL.

FIELD

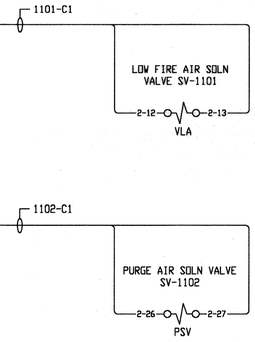

FURNACE NO. 2 FSS COMBUSTION AIR CONTROL CABINET

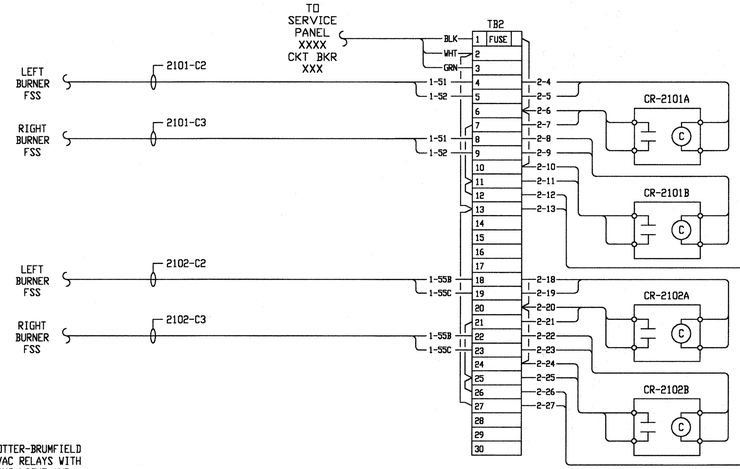

NOTES:
1. ALL RELAYS SHALL BE POTTER-BRUMFIELD KRPA11AN120 DPDT 120 VAC RELAYS WITH WITH INTEGRAL INDICATING LIGHT AND MOUNTING SOCKET OR APPROVED EQUAL.

FIELD

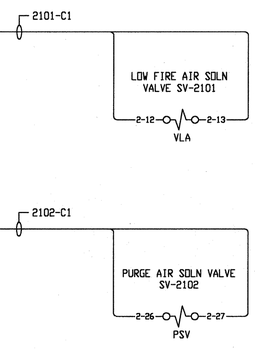

REV NO	DESCRIPTION	APP'D	DATE

SEAL

AS-BUILT
Darrell Ross
1/25/02

SEAL

STATE OF TEXAS
JESSE M. CARR III
52288
REGISTERED
PROFESSIONAL
ENGINEER
2-28-99

intellex CORPORATION
CONTROL SYSTEMS ENGINEERS
11230 WILCREST GREEN Houston, Texas 77042

CH2M HILL
7600 West Tidwell Road, Suite 400
Houston Tx 77040
713.462.0161

Binkley & Barfield, Inc.
Consulting Engineers
1710 Seamist Drive Houston, Texas 77008

ALMEDA SIMS
BIOSOLIDS
DRYER REHABILITATION

CIP NO 0298-05-3
FILE NO: 4289-4

WIRING SCHEMATIC DIAGRAM
BIOSOLIDS DRYERS
COMBUSTION AIR CONTROL

CITY OF HOUSTON

DEPARTMENT OF PUBLIC WORKS AND ENGINEERING
ENGINEERING, CONSTRUCTION AND REAL ESTATE GROUP

SECTION APPROVALS

WATER ENGINEERING

TRAFFIC AND SIGNAL ENGINEERING

Hamid Jomaa 2-25-99
WASTEWATER ENGINEERING

STREET & BRIDGE ENGINEERING

STORMWATER ENGINEERING

CONSTRUCTION 2/26/99

Zaid Mohamad 2/25/99

OTHER DEPARTMENTS

PLANNING AND DEVELOPMENT

SPONSOR DEPARTMENT

CITY ENGINEER 3-2-99
DATE

DIRECTOR OF PUBLIC WORKS AND ENGINEERING 3/8/99
DATE

SUBMITTED:
SCALE: NONE
NONE
DATE:12/4/98
SURVEY BY: N/A
F B NO:

DESIGNED BY: JMC
DRAWN BY: JFB
DWG. NO. : 124
SHT NO 40 of 159 SHTS

CITY DWG NO:
35001

ORIGINAL SCALE IN INCHES
FOR REDUCED PLANS
0 1 2 3

CADD DWG FILE NO : K:\RBI-AS\125.DWG
FILE DATE--OPERATOR:

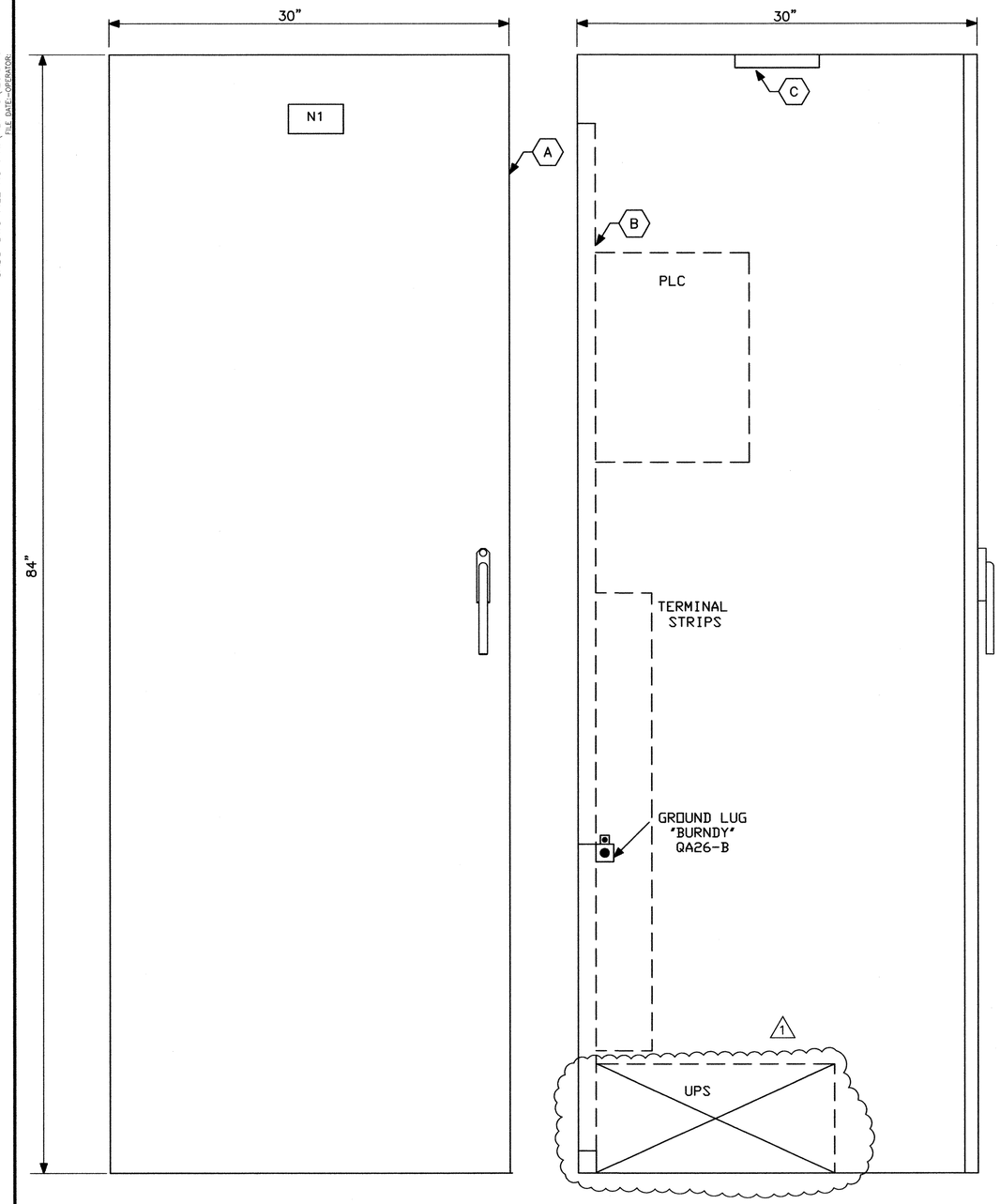

CONTROL PANEL FRONT ELEVATION

SIDE ELEVATION

NOTES:

1. NAMEPLATES SHALL BE MOUNTED TO PANELS USING STAINLESS STEEL HARDWARE.
2. NAMEPLATES SHALL BE BLACK LAMACOID WITH 1/4" WHITE LETTERS.

BILL OF MATERIALS

TAG	DESCRIPTION	QTY
A	NEMA 12 84x30x30 HOFFMAN CABINET 843030LP OR EQUAL	1
B	81x27 HOFFMAN PANEL A-84P30 OR EQUAL	1
C	24 WATT SINGLE BULB FLUORESCENT LIGHT FIXTURE	1

NAMEPLATE SCHEDULE

ITEM	SIZE	LINE 1	LINE 2	LINE 3
N1	2"x5"	DRIED BIOSOLIDS	CONVEYING	PANEL CP-200

REV NO	DESCRIPTION	APP'D	DATE
1	AS BUILT DRAWING	DJR	12/01

SEAL

STATE OF TEXAS
DAVID J. ROSS
68267
REGISTERED PROFESSIONAL ENGINEER

SEAL

David J. Ross
1/25/02

intellex CORPORATION
CONTROL SYSTEMS ENGINEERS
11230 WILCREST GREEN Houston, Texas 77042

RATNALA & BAHL, INC.
Engineers • Architects • Surveyors
11767 KATY FREEWAY, SUITE 510
HOUSTON, TEXAS 77079

CH2M HILL
7600 West Tidwell Road, Suite 400
Houston Tx 77040
713.462.0161

Binkley & Barfield, Inc.
Consulting Engineers
1710 Seamist Drive Houston, Texas 77008

ALMEDA SIMS
BIOSOLIDS
DRYER REHABILITATION

CIP NO 0298-05-3
FILE NO: 4289-4

CONTROL SYSTEM PANEL
DRIED BIOSOLIDS CONVEYING
PANEL CP-200 FACE LAYOUT

CITY OF HOUSTON
DEPARTMENT OF PUBLIC WORKS AND ENGINEERING
ENGINEERING, CONSTRUCTION AND REAL ESTATE GROUP

SECTION APPROVALS

WATER ENGINEERING
TRAFFIC AND SIGNAL ENGINEERING
WASTEWATER ENGINEERING
STREET & BRIDGE ENGINEERING
STORMWATER ENGINEERING
CONSTRUCTION

OTHER DEPARTMENTS

PLANNING AND DEVELOPMENT
SPONSOR DEPARTMENT

CITY ENGINEER DATE

DIRECTOR OF PUBLIC WORKS AND ENGINEERING DATE

SUBMITTED:
SCALE: NONE
NONE
DATE: 12/4/98
SURVEY BY:
F B NO:

DESIGNED BY: JMC
DRAWN BY: MBB
DWG. NO. : 125
SHT NO 41 of 159 SHTS
CITY DWG NO:
35001

ORIGINAL SCALE IN INCHES
FOR REDUCED PLANS
0 1 2 3

CADD DWG FILE NO : K:\RBI-AS\125.DWG
FILE DATE--OPERATOR:

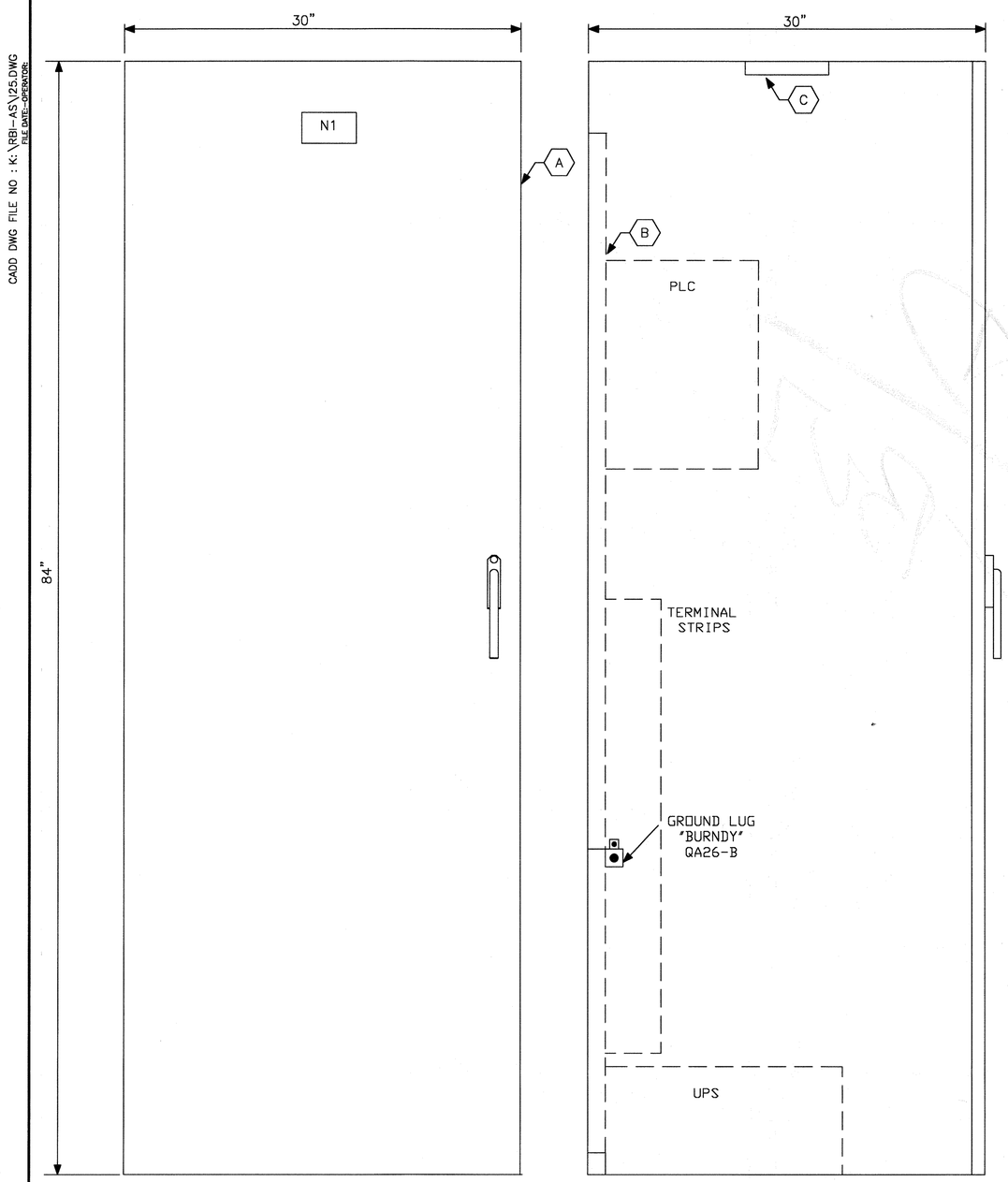

CONTROL PANEL FRONT ELEVATION

SIDE ELEVATION

NOTES:

1. NAMEPLATES SHALL BE MOUNTED TO PANELS USING STAINLESS STEEL HARDWARE.
2. NAMEPLATES SHALL BE BLACK LAMACOID WITH 1/4" WHITE LETTERS.

BILL OF MATERIALS

TAG	DESCRIPTION	QTY
A	NEMA 12 84x30x30 HOFFMAN CABINET 843030LP OR EQUAL	1
B	81x27 HOFFMAN PANEL A-84P30 OR EQUAL	1
C	24 WATT SINGLE BULB FLUORESCENT LIGHT FIXTURE	1

NAMEPLATE SCHEDULE

ITEM	SIZE	LINE 1	LINE 2	LINE 3
N1	2"x5"	DRIED BIOSOLIDS	CONVEYING	PANEL CP-200

ORIGINAL SCALE IN INCHES FOR REDUCED PLANS
0 1 2 3

REV NO	DESCRIPTION	APP'D	DATE

SEAL

SEAL
STATE OF TEXAS
JESSE M. CARR III
52288
REGISTERED PROFESSIONAL ENGINEER
2-24-99

intellex CORPORATION
CONTROL SYSTEMS ENGINEERS
11230 WILCREST GREEN Houston, Texas 77042

RATNALA & BAHL, INC.
Engineers • Architects • Surveyors
11767 KATY FREEWAY. SUITE 510
HOUSTON, TEXAS 77079

CH2M HILL
7600 West Tidwell Road, Suite 400
Houston Tx 77040
713.462.0161

Binkley & Barfield, Inc.
Consulting Engineers
1710 Seamist Drive Houston, Texas 77008

ALMEDA SIMS
BIOSOLIDS
DRYER REHABILITATION

CIP NO 0298-05-3
FILE NO: 4289-4

CONTROL SYSTEM PANEL
DRIED BIOSOLIDS CONVEYING
PANEL CP-200 FACE LAYOUT

CITY OF HOUSTON
DEPARTMENT OF PUBLIC WORKS AND ENGINEERING
ENGINEERING, CONSTRUCTION AND REAL ESTATE GROUP

SECTION APPROVALS

WATER ENGINEERING

TRAFFIC AND SIGNAL ENGINEERING

Hamid Yazdi 2-25-99
WASTEWATER ENGINEERING

STREET & BRIDGE ENGINEERING

STORMWATER ENGINEERING

Courtney Queen 3/4/99
CONSTRUCTION

Zia Yahia 3/2/99

OTHER DEPARTMENTS

PLANNING AND DEVELOPMENT

SPONSOR DEPARTMENT

Herbert Lum 3-2-99
CITY ENGINEER DATE

3/5/99
DIRECTOR OF PUBLIC WORKS AND ENGINEERING DATE

SUBMITTED:
SCALE: NONE
NONE
DATE:12/4/98
SURVEY BY:
F B NO:

DESIGNED BY: JMC
DRAWN BY: MBB
DWG. NO. : 125
SHT NO 41 of 159 SHTS
CITY DWG NO:
35001

CADD DWG FILE NO : K:\RBI-ASV\26.DWG
FILE DATE-SPSHOP

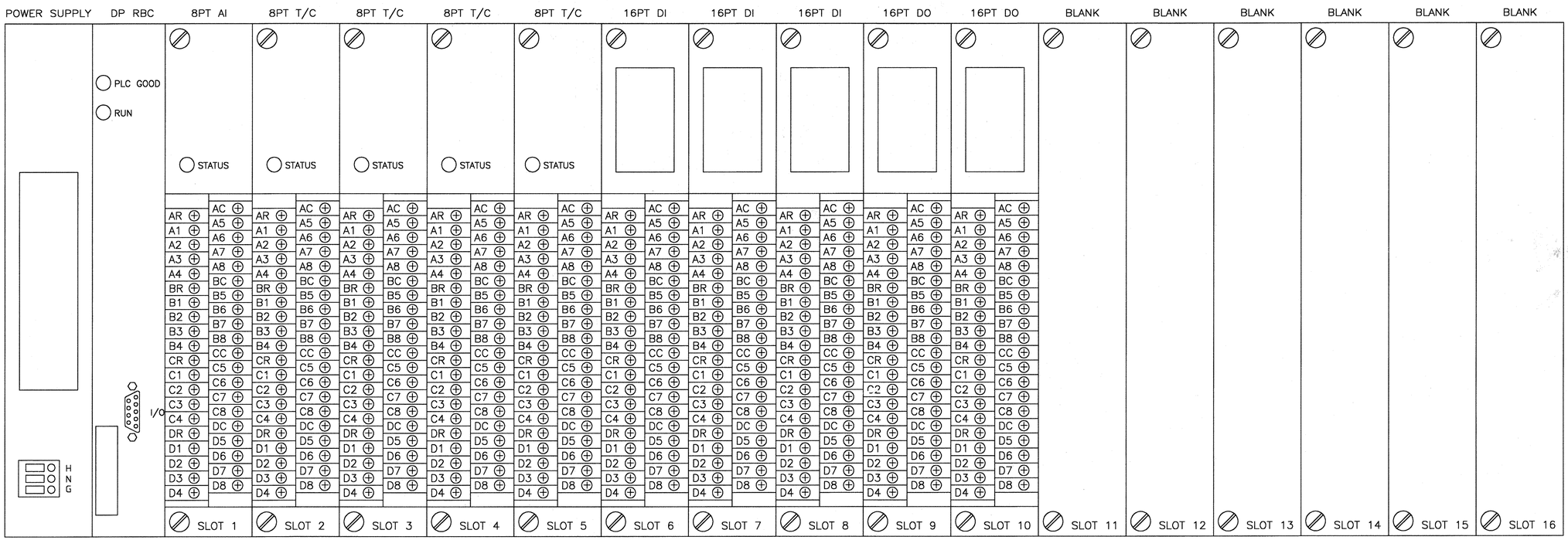

PLC RACK LAYOUT

1 – LT0230	1 – TE0231A	1 – TE0231I	1 – TE0231Q	1 – TE0231Y	1 – SSL0253	1 – ZS0233A	1 – SPARE	1 – CR0251A	1 – CR0371A
2 – SPARE	2 – TE0231B	2 – TE0231J	2 – TE0231R	2 – TE0231Z	2 – HS0251A	2 – ZS0233B	2 – SPARE	2 – CR0251B	2 – CR0371B
3 – SPARE	3 – TE0231C	3 – TE0231K	3 – TE0231S	3 – SPARE	3 – HS0251B	3 – HS0221	3 – SPARE	3 – CR0201A	3 – CR0230
4 – SPARE	4 – TE0231D	4 – TE0231L	4 – TE0231T	4 – SPARE	4 – YS0251	4 – ZS0222A	4 – SPARE	4 – CR0201B	4 – SPARE
5 – SPARE	5 – TE0231E	5 – TE0231M	5 – TE0231U	5 – SPARE	5 – SSL0203	5 – ZS0222B	5 – SPARE	5 – SPARE	5 – SPARE
6 – SPARE	6 – TE0231F	6 – TE0231N	6 – TE0231V	6 – SPARE	6 – HS0201A	6 – HS0261A	6 – SPARE	6 – CR0211A	6 – SPARE
7 – SPARE	7 – TE0231G	7 – TE0231O	7 – TE0231W	7 – SPARE	7 – HS0201B	7 – HS0261B	7 – SPARE	7 – CR0211B	7 – SPARE
8 – SPARE	8 – TE0231H	8 – TE0231P	8 – TE0231X	8 – SPARE	8 – YS0201	8 – YS0261	8 – SPARE	8 – CR0241A	8 – SPARE
					9 – HS0211A	9 – SSL0313	9 – SPARE	9 – CR0241B	9 – SPARE
					10– HS0211B	10– HS0311A	10– SPARE	10– SV0232	10– SPARE
					11– YS0211	11– HS0311B	11– SPARE	11– SV0221	11– SPARE
					12– SSL0243	12– YS0311	12– SPARE	12– CR0261A	12– SPARE
					13– HS0241A	13– LSH0301	13– SPARE	13– CR0261B	13– SPARE
					14– HS0241B	14– HS0371A	14– SPARE	14– CR0311A	14– SPARE
					15– YS0241	15– HS0371B	15– SPARE	15– CR0311B	15– SPARE
					16– HS0232	16– YS0371	16– SPARE	16– SPARE	16– SPARE

PLC I/O CHANNEL ASSIGNMENTS

ORIGINAL SCALE IN INCHES
FOR REDUCED PLANS
0 1 2 3

REV NO	DESCRIPTION	APP'D	DATE

SEAL
AS-BUILT
Darrell Ross
1/25/02

SEAL
STATE OF TEXAS
JESSE M. CARR III
58288
REGISTERED PROFESSIONAL ENGINEER
2-2499

intellex CORPORATION
CONTROL SYSTEMS ENGINEERS
11230 WILCREST GREEN Houston, Texas 77042

RATNALA & BAHL, INC.
Engineers • Architects • Surveyors
11767 KATY FREEWAY, SUITE 510
HOUSTON, TEXAS 77079

CH2M HILL
7600 West Tidwell Road, Suite 400
Houston Tx 77040
713.462.0161

Binkley & Barfield, Inc.
Consulting Engineers
1710 Seamist Drive Houston, Texas 77008

ALMEDA SIMS
BIOSOLIDS
DRYER REHABILITATION

CIP NO 0298-05-3
FILE NO: 4289-4

CONTROL SYSTEM PANEL
DRIED BIOSOLIDS CONVEYING
INPUT/OUTPUT ASSIGNMENTS

CITY OF HOUSTON
DEPARTMENT OF PUBLIC WORKS AND ENGINEERING
ENGINEERING, CONSTRUCTION AND REAL ESTATE GROUP

SECTION APPROVALS

WATER ENGINEERING
TRAFFIC AND SIGNAL ENGINEERING
Hamid Tohidi 2-25-99
WASTEWATER ENGINEERING
STREET & BRIDGE ENGINEERING
STORMWATER ENGINEERING
Rodney Quan 3/2/99
CONSTRUCTION
Zia Yazdi 3/25/99

OTHER DEPARTMENTS

PLANNING AND DEVELOPMENT
SPONSOR DEPARTMENT
Herbert D. Lum 3-2-99
CITY ENGINEER DATE
DIRECTOR OF PUBLIC WORKS AND ENGINEERING 3/3/99 DATE

SUBMITTED:
SCALE: NONE
NONE
DATE:12/4/98
SURVEY BY:
F B NO:

DESIGNED BY: JMC
DRAWN BY: MBB
DWG. NO. : 126
SHT NO 42 of 159 SHTS
CITY DWG NO:
35001

CADD DWG FILE NO : K:\RBI-ASV127.DWG
FILE DATE-OPERATOR:

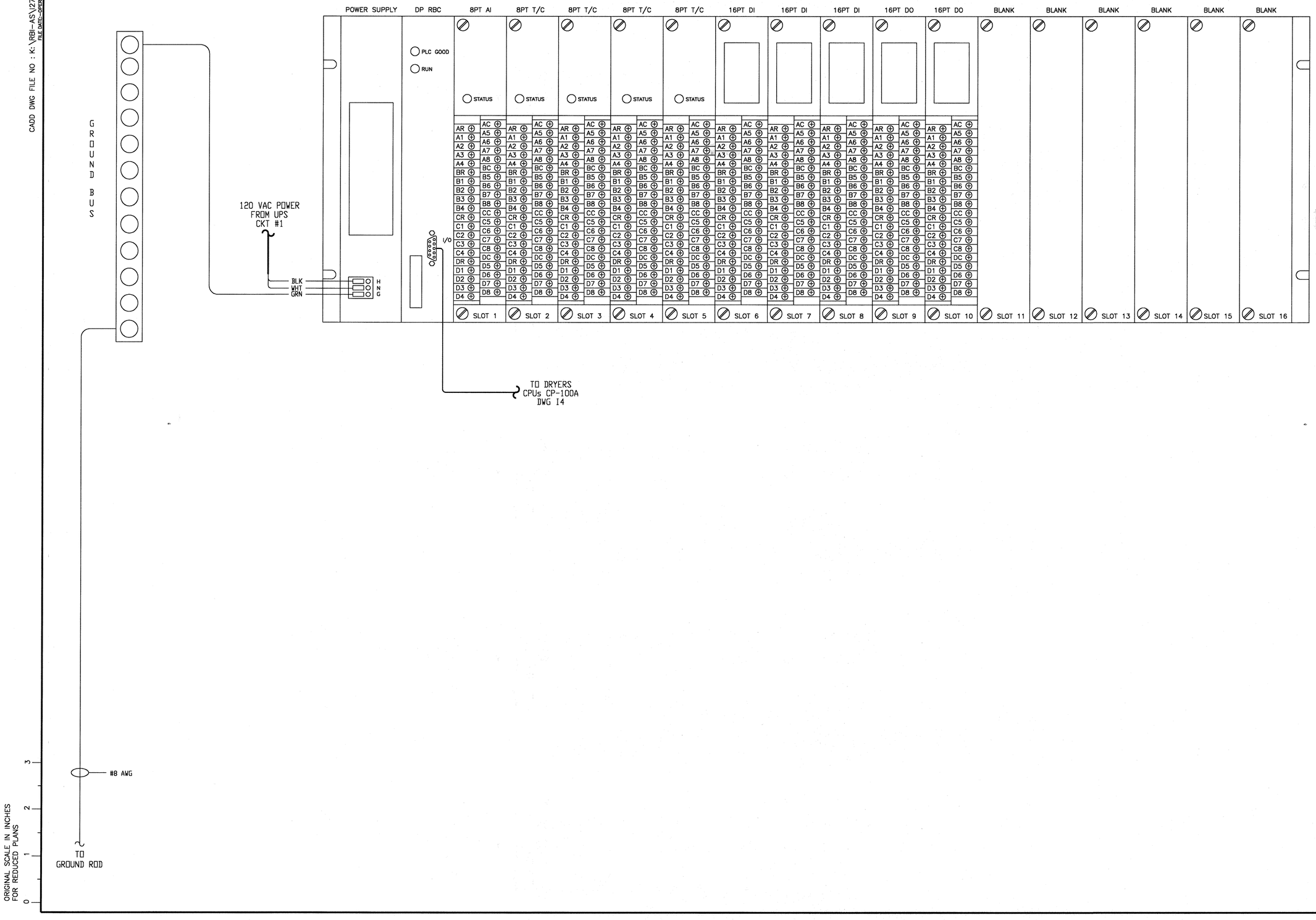

REV NO	DESCRIPTION	APP'D	DATE

SEAL

SEAL — STATE OF TEXAS — JESSE H. CARR III — 52288 — REGISTERED PROFESSIONAL ENGINEER — 2-24-99

intellex CORPORATION
CONTROL SYSTEMS ENGINEERS
11230 WILCREST GREEN Houston, Texas 77042

RATNALA & BAHL, INC.
Engineers • Architects • Surveyors
11767 KATY FREEWAY. SUITE 510
HOUSTON, TEXAS 77079

CH2M HILL
7600 West Tidwell Road, Suite 400
Houston Tx 77040
713.462.0161

Binkley & Barfield, Inc.
Consulting Engineers
1710 Seamist Drive Houston, Texas 77008

ALMEDA SIMS BIOSOLIDS DRYER REHABILITATION

CIP NO 0298-05-3
FILE NO: 4289-4

CONTROL SYSTEM PANEL DRIED BIOSOLIDS CONVEYING POWER & COMMUNICATIONS WIRING

CITY OF HOUSTON

DEPARTMENT OF PUBLIC WORKS AND ENGINEERING
ENGINEERING, CONSTRUCTION AND REAL ESTATE GROUP

SECTION APPROVALS

WATER ENGINEERING

TRAFFIC AND SIGNAL ENGINEERING

WASTEWATER ENGINEERING — Hamid Tonekaboni 2-25-99

STREET & BRIDGE ENGINEERING

STORMWATER ENGINEERING

CONSTRUCTION — 3/2/99

3/2/99

OTHER DEPARTMENTS

PLANNING AND DEVELOPMENT

SPONSOR DEPARTMENT

CITY ENGINEER — 3-2-99 DATE

DIRECTOR OF PUBLIC WORKS AND ENGINEERING — 3/5/99 DATE

SUBMITTED:
SCALE: NONE
NONE
DATE:12/4/98
SURVEY BY:
F B NO:

DESIGNED BY: JMC
DRAWN BY: MBB
DWG. NO. : I27
SHT NO 43 of 159 SHTS

CITY DWG NO:
35001

CADD DWG FILE NO : K:\RBI-AS\V28.DWG
FILE DATE-OPERATOR:

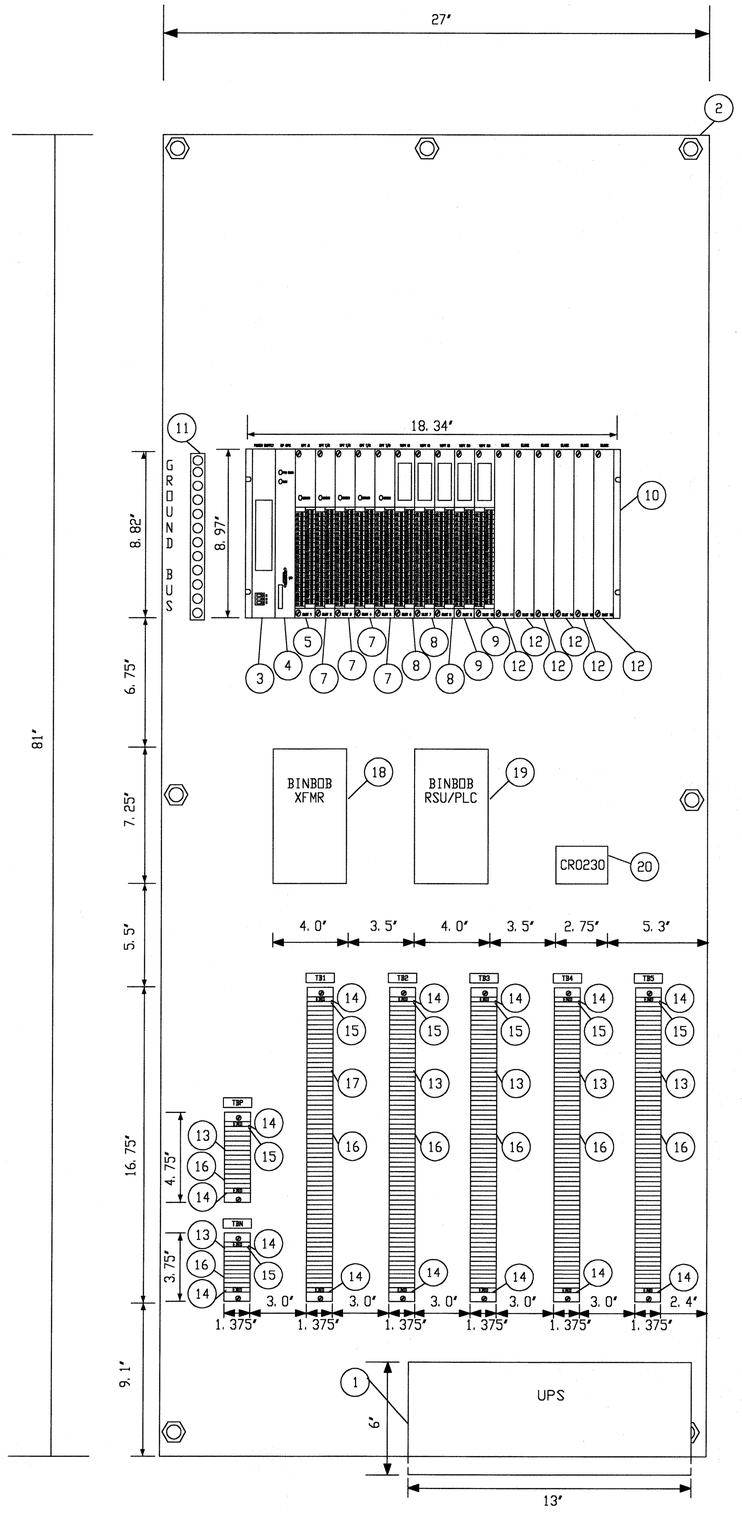

ORIGINAL SCALE IN INCHES FOR REDUCED PLANS
0 1 2 3

BILL OF MATERIAL

TAG	DESCRIPTION	QTY
1	UNINTERRUPTABLE POWER SUPPLY (UPS) SEE SECTION 13440 FOR REQUIREMENTS	1
2	81x27 HOFFMAN PANEL A-84P30 OR EQUAL	1
3	SIEMENS 505-6660 AC POWER SUPPLY	1
4	SIEMENS PROFIBUS DP REMOTE BASE CONTROLLER 505-6870	1
5	SIEMENS 505-6108-A 8 CH. ANALOG IN MODULE	1
6A	CABLE - 505-1104 PROFIBUS DP CABLE	1
7	SIEMENS 505-7028 8 CH. THERMOCOUPLE MODULE TYPE K	4
8	SIEMENS 505-4216-A 16 CH. 120VAC DIGITAL IN MODULE	3
9	SIEMENS 505-4916 120VAC RELAY FORM A DIGITAL OUT MODULE	2
10	SIEMENS 505-6516 TI505 BASE 16 SLOT	1
11	GROUND BUS	1
12	SIEMENS 505-4000 BLANK SLOT COVER	6
13	TERMINAL BLOCK PHOENIX CONTACT UK2.5 B OR EQUAL	101
14	END TERMINAL BLOCK PHOENIX CONTACT E/UK OR EQUAL	14
15	END TERMINAL PLATE PHOENIX CONTACT D-UK2.5 OR EQUAL	7
16	ALUMINUM PERFORATED MOUNTING RAIL PHOENIX CONTACT NS35/7.5 OR EQUAL	3
17	TERMINAL BLOCK WITH FUSE PHOENIX CONTACT UK5-HESI OR EQUAL	88
18	BINBOB XFMR 150 16VAC/120VAC 150VA	1
19	BINBOB RSU/PLC INTERFACE	1
20	RELAY, 24VDC WITH 11 PIN SOCKET BASE	1

NOTE:

1. TERMINAL BLOCK NAMEPLATES SHALL BE 0.5" x 1" BLACK LAMACOID WITH 0.25" WHITE LETTERS ENGRAVED AS INDICATED ON THIS DRAWING.

REV NO	DESCRIPTION	APP'D	DATE

SEAL — AS-BUILT — 1/25/02

SEAL — STATE OF TEXAS — JESSE M. CARR III — 52288 — REGISTERED PROFESSIONAL ENGINEER — 2-24-99

intellex CORPORATION
CONTROL SYSTEMS ENGINEERS
11230 WILCREST GREEN Houston, Texas 77042

RATNALA & BAHL, INC.
Engineers • Architects • Surveyors
11767 KATY FREEWAY, SUITE 510
HOUSTON, TEXAS 77079

CH2M HILL
7600 West Tidwell Road, Suite 400
Houston Tx 77040
713.462.0161

Binkley & Barfield, Inc.
Consulting Engineers
1710 Seamist Drive Houston, Texas 77008

ALMEDA SIMS
BIOSOLIDS
DRYER REHABILITATION

CIP NO 0298-05-3
FILE NO: 4289-4

CONTROL SYSTEM PANEL
DRIED BIOSOLIDS CONVEYING
PANEL CP-200

CITY OF HOUSTON
DEPARTMENT OF PUBLIC WORKS AND ENGINEERING
ENGINEERING, CONSTRUCTION AND REAL ESTATE GROUP

SECTION APPROVALS

WATER ENGINEERING — TRAFFIC AND SIGNAL ENGINEERING

Hamid Jamshidi 2-25-99
WASTEWATER ENGINEERING — STREET & BRIDGE ENGINEERING

STORMWATER ENGINEERING — CONSTRUCTION 2/26/99

Zia Mohammad 2/25/99

OTHER DEPARTMENTS

PLANNING AND DEVELOPMENT — SPONSOR DEPARTMENT

CITY ENGINEER 3-2-99 DATE

DIRECTOR OF PUBLIC WORKS AND ENGINEERING 3/5/99 DATE

SUBMITTED:
SCALE: NONE
NONE
DATE: 12/4/98
SURVEY BY:
F B NO:

DESIGNED BY: JMC
DRAWN BY: MBB
DWG. NO. : 128
SHT NO 44 of 159 SHTS

CITY DWG NO:
35001

CADD DWG FILE NO : K:\RBI-AS\I29.DWG
FILE DATE-OPERATOR:

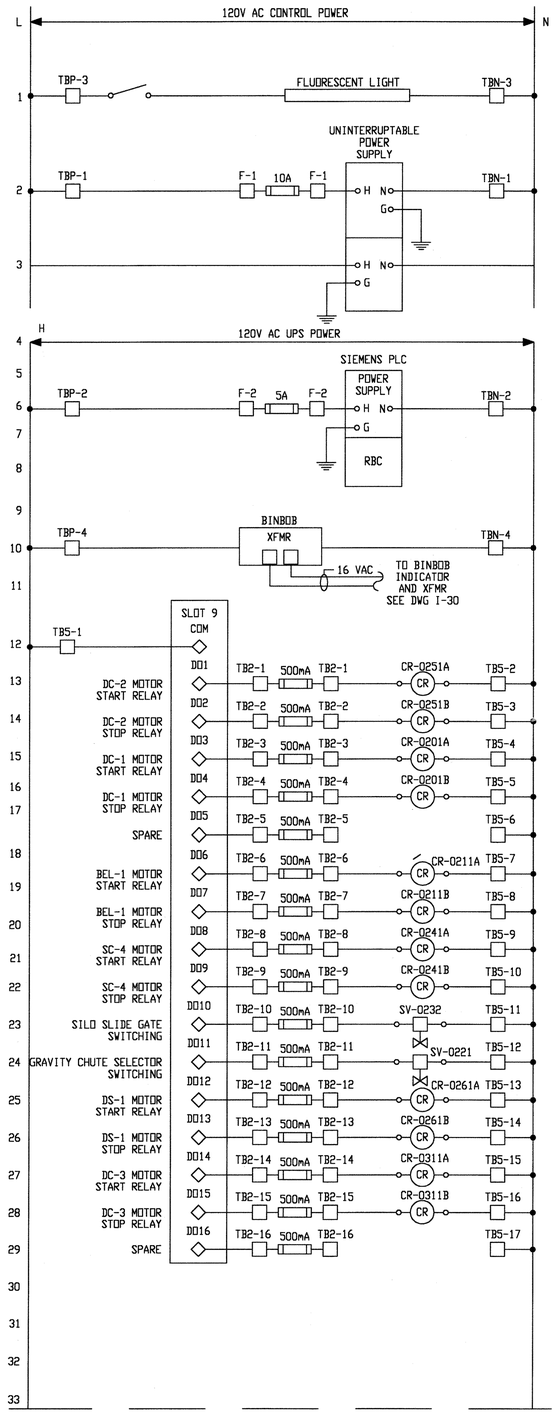

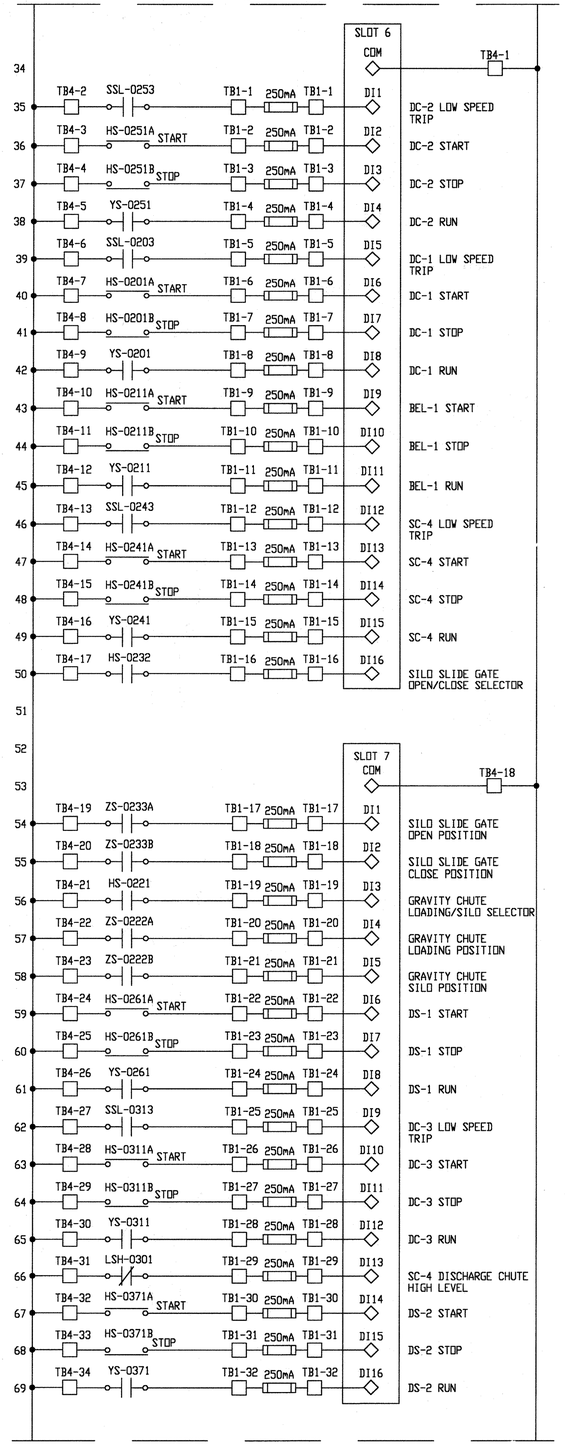

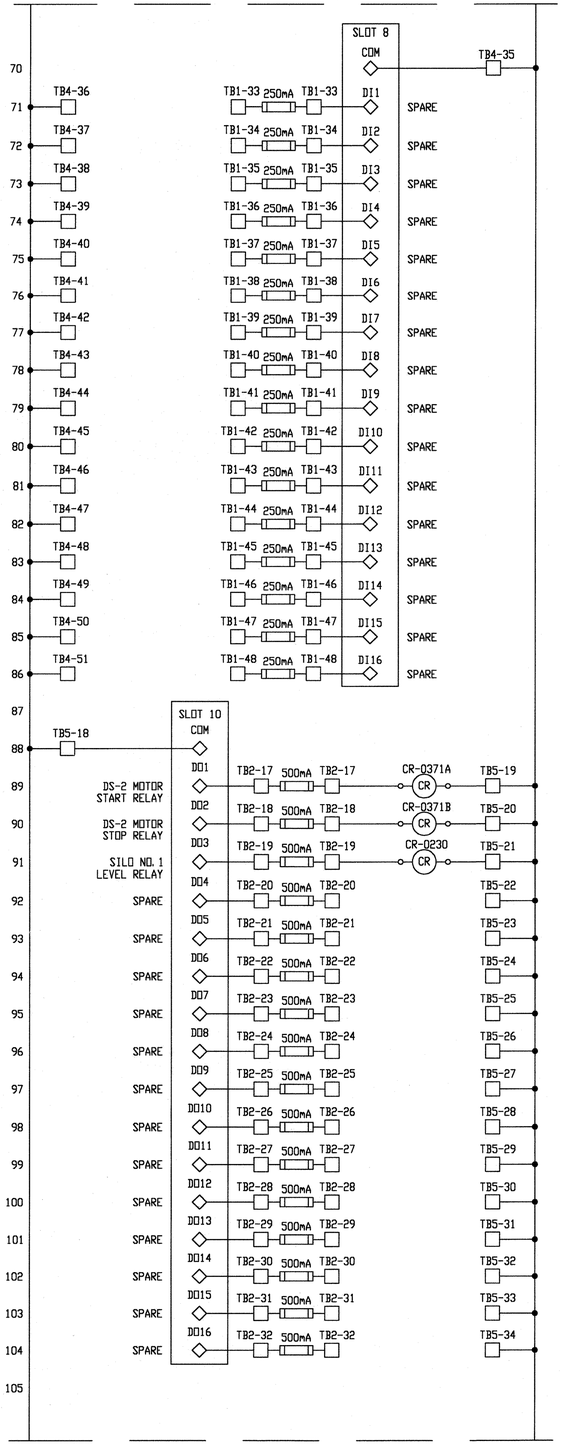

ORIGINAL SCALE IN INCHES
FOR REDUCED PLANS
0 1 2 3

REV NO	DESCRIPTION	APP'D	DATE

SEAL

AS-BUILT
1/25/02

SEAL

STATE OF TEXAS
JESSE M. CARR III
P.E. 52288
REGISTERED PROFESSIONAL ENGINEER
2-24-99

intellex CORPORATION
CONTROL SYSTEMS ENGINEERS
11230 WILCREST GREEN Houston, Texas 77042

RATNALA & BAHL, INC.
Engineers • Architects • Surveyors
11767 KATY FREEWAY, SUITE 510
HOUSTON, TEXAS 77079

CH2M HILL
7600 West Tidwell Road, Suite 400
Houston Tx 77040
713.462.0161

Binkley & Barfield, Inc.
Consulting Engineers
1710 Seamist Drive Houston, Texas 77008

ALMEDA SIMS
BIOSOLIDS
DRYER REHABILITATION

CIP NO 0298-05-3
FILE NO: 4289-4

CONTROL SYSTEM PANEL
DRIED BIOSOLIDS CONVEYING
INPUT/OUTPUT WIRING

CITY OF HOUSTON
DEPARTMENT OF PUBLIC WORKS AND ENGINEERING
ENGINEERING, CONSTRUCTION AND REAL ESTATE GROUP

SECTION APPROVALS

WATER ENGINEERING

TRAFFIC AND SIGNAL ENGINEERING

Hamid Qazi 2-25-99
WASTEWATER ENGINEERING

STREET & BRIDGE ENGINEERING

STORMWATER ENGINEERING

Courtney Cuner 3/2/99
CONSTRUCTION

Zia Mohammadi 2/25/99

OTHER DEPARTMENTS

PLANNING AND DEVELOPMENT

SPONSOR DEPARTMENT

CITY ENGINEER 3-2-99 DATE

DIRECTOR OF PUBLIC WORKS AND ENGINEERING 3/5/99 DATE

SUBMITTED:
SCALE: NONE
NONE
DATE:12/4/98
SURVEY BY:
F B NO:

DESIGNED BY: JMC
DRAWN BY: MBB
DWG. NO. : I29
SHT NO 45 of 159 SHTS

CITY DWG NO:
35001

CADD DWG FILE NO : K:\RBI-AS\I30.DWG
FILE DATE-OPERATOR:

MATCHLINE 'C' - DWG I29

MATCHLINE 'D

MATCHLINE 'E'

MATCHLINE 'F - DWG I31

16 VAC FROM XFMR

BINBOB RSU/PLC

LY-0230

16 VAC

LT-0230

CR-0230

SEE DWG I-29

SLOT 1

TB3-1	50mA	TB3-1	IN0+
TB3-2			IN0-
TB3-3			GND
TB3-4	50mA	TB3-4	IN1+
TB3-5			IN1-
TB3-6			GND
TB3-7	50mA	TB3-7	IN2+
TB3-8			IN2-
TB3-9			GND
TB3-10	50mA	TB3-10	IN3+
TB3-11			IN3-
TB3-12			GND
TB3-13	50mA	TB3-13	IN4+
TB3-14			IN4-
TB3-15			GND
TB3-16	50mA	TB3-16	IN5+
TB3-17			IN5-
TB3-18			GND
TB3-19	50mA	TB3-19	IN6+
TB3-20			IN6-
TB3-21			GND
TB3-22	50mA	TB3-22	IN7+
TB3-23			IN7-
TB3-24			GND

SILO NO. 1 LEVEL
SPARE
SPARE
SPARE
SPARE
SPARE

SLOT 2

TE-0231A	YELLOW	IN1+
	RED	IN1-
TE-0231B	YELLOW	IN2+
	RED	IN2-
TE-0231C	YELLOW	IN3+
	RED	IN3-
TE-0231D	YELLOW	IN4+
	RED	IN4-
TE-0231E	YELLOW	IN5+
	RED	IN5-
TE-0231F	YELLOW	IN6+
	RED	IN6-
TE-0231G	YELLOW	IN7+
	RED	IN7-
TE-0231H	YELLOW	IN8+
	RED	IN8-

SILO NO. 1 TEMPERATURE A
SILO NO. 1 TEMPERATURE B
SILO NO. 1 TEMPERATURE C
SILO NO. 1 TEMPERATURE D
SILO NO. 1 TEMPERATURE E
SILO NO. 1 TEMPERATURE F
SILO NO. 1 TEMPERATURE G
SILO NO. 1 TEMPERATURE H

CJCAL
CJGND
CHASSIS SHIELD
CHASSIS SHIELD
TO GROUND ROD

SLOT 3

TE-0231I	YELLOW	IN1+
	RED	IN1-
TE-0231J	YELLOW	IN2+
	RED	IN2-
TE-0231K	YELLOW	IN3+
	RED	IN3-
TE-0231L	YELLOW	IN4+
	RED	IN4-
TE-0231M	YELLOW	IN5+
	RED	IN5-
TE-0231N	YELLOW	IN6+
	RED	IN6-
TE-0231O	YELLOW	IN7+
	RED	IN7-
TE-0231P	YELLOW	IN8+
	RED	IN8-

SILO NO. 1 TEMPERATURE I
SILO NO. 1 TEMPERATURE J
SILO NO. 1 TEMPERATURE K
SILO NO. 1 TEMPERATURE L
SILO NO. 1 TEMPERATURE M
SILO NO. 1 TEMPERATURE N
SILO NO. 1 TEMPERATURE O
SILO NO. 1 TEMPERATURE P

CJCAL
CJGND
CHASSIS SHIELD
CHASSIS SHIELD
TO GROUND ROD

ORIGINAL SCALE IN INCHES FOR REDUCED PLANS
0 1 2 3

REV NO	DESCRIPTION	APP'D	DATE

SEAL
AS-BUILT
Darrell Ban
1/25/02

SEAL
STATE OF TEXAS
JESSE M. CARR III
52288
REGISTERED PROFESSIONAL ENGINEER
2-24-99

intellex CORPORATION
CONTROL SYSTEMS ENGINEERS
11230 WILCREST GREEN Houston, Texas 77042

RATNALA & BAHL, INC.
Engineers • Architects • Surveyors
11767 KATY FREEWAY, SUITE 510
HOUSTON, TEXAS 77079

CH2M HILL
7600 West Tidwell Road, Suite 400
Houston Tx 77040
713.462.0161

Binkley & Barfield, Inc.
Consulting Engineers
1710 Seamist Drive Houston, Texas 77008

ALMEDA SIMS
BIOSOLIDS
DRYER REHABILITATION

CIP NO 0298-05-3
FILE NO: 4289-4

CONTROL SYSTEM PANEL
DRIED BIOSOLIDS CONVEYING
INPUT/OUTPUT WIRING

CITY OF HOUSTON
DEPARTMENT OF PUBLIC WORKS AND ENGINEERING
ENGINEERING, CONSTRUCTION AND REAL ESTATE GROUP

SECTION APPROVALS

WATER ENGINEERING
TRAFFIC AND SIGNAL ENGINEERING
Howard Lowe 2-25-99
WASTEWATER ENGINEERING
STREET & BRIDGE ENGINEERING
STORMWATER ENGINEERING
Gustavo Cuevas 3/2/99
CONSTRUCTION
3/5/99

OTHER DEPARTMENTS

PLANNING AND DEVELOPMENT
SPONSOR DEPARTMENT
Herbert L Lum 3-2-99
CITY ENGINEER DATE
3/5/99
DIRECTOR OF PUBLIC WORKS AND ENGINEERING DATE

SUBMITTED:
SCALE: NONE
NONE
DATE:12/4/98
SURVEY BY:
F B NO:

DESIGNED BY: JMC
DRAWN BY: MBB
DWG. NO. : I30
SHT NO 46 of 159 SHTS
CITY DWG NO:
35001

CADD DWG FILE NO : K:\RBI-AS\I31.DWG
FILE DATE-OPERATOR:

MATCHLINE 'F' - DWG I30

216		SLOT 4		
217		CJCAL		
218		CJGND		
TE-0231Q	219	YELLOW	IN1+	SILO NO. 1 TEMPERATURE Q
	220	RED	IN1-	
TE-0231R	221	YELLOW	IN2+	SILO NO. 1 TEMPERATURE R
	222	RED	IN2-	
TE-0231S	223	YELLOW	IN3+	SILO NO. 1 TEMPERATURE S
	224	RED	IN3-	
TE-0231T	225	YELLOW	IN4+	SILO NO. 1 TEMPERATURE T
	226	RED	IN4-	
TE-0231U	227	YELLOW	IN5+	SILO NO. 1 TEMPERATURE U
	228	RED	IN5-	
TE-0231V	229	YELLOW	IN6+	SILO NO. 1 TEMPERATURE V
	230	RED	IN6-	
TE-0231W	231	YELLOW	IN7+	SILO NO. 1 TEMPERATURE W
	232	RED	IN7-	
TE-0231X	233	YELLOW	IN8+	SILO NO. 1 TEMPERATURE X
	234	RED	IN8-	
	235		CHASSIS SHIELD	
	236		CHASSIS SHIELD	
	237		TO GROUND ROD	
	238			
	239			
	240			
	241			
	242			
	243			
	244			
	245			
	246			
	247			
	248			
	249			

MATCHLINE 'G'

MATCHLINE 'G'

250	SLOT 5		
251	CJCAL		
	CJGND		
TE-0231Y 252	YELLOW	IN1+	SILO NO. 1 TEMPERATURE Y
253	RED	IN1-	
TE-0231Z 254	YELLOW	IN2+	SILO NO. 1 TEMPERATURE Z
255	RED	IN2-	
256		IN3+	SPARE
257		IN3-	
258		IN4+	SPARE
259		IN4-	
260		IN5+	SPARE
261		IN5-	
262		IN6+	SPARE
263		IN6-	
264		IN7+	SPARE
265		IN7-	
266		IN8+	SPARE
267		IN8-	
268		CHASSIS SHIELD	
269		CHASSIS SHIELD	
270		TO GROUND ROD	
271			
272			
273			
274			
275			
276			
277			
278			
279			

ORIGINAL SCALE IN INCHES FOR REDUCED PLANS
0 1 2 3

REV NO	DESCRIPTION	APP'D	DATE

SEAL

AS-BUILT
Darrell Ross 1/25/02

SEAL

STATE OF TEXAS
JESSE M. CARR III
NO. 52288
REGISTERED
PROFESSIONAL ENGINEER
2-24-99

intellex CORPORATION
CONTROL SYSTEMS ENGINEERS
11230 WILCREST GREEN Houston, Texas 77042

RATNALA & BAHL, INC.
Engineers • Architects • Surveyors
11767 KATY FREEWAY, SUITE 510
HOUSTON, TEXAS 77079

CH2M HILL
7600 West Tidwell Road, Suite 400
Houston Tx 77040
713.462.0161

Binkley & Barfield, Inc.
Consulting Engineers
1710 Seamist Drive Houston, Texas 77008

ALMEDA SIMS
BIOSOLIDS
DRYER REHABILITATION

CIP NO 0298-05-3
FILE NO: 4289-4

CONTROL SYSTEM PANEL
DRIED BIOSOLIDS CONVEYING
INPUT/OUTPUT WIRING

CITY OF HOUSTON
DEPARTMENT OF PUBLIC WORKS AND ENGINEERING
ENGINEERING, CONSTRUCTION AND REAL ESTATE GROUP

SECTION APPROVALS

WATER ENGINEERING

TRAFFIC AND SIGNAL ENGINEERING

Hamid Jamshidi 2-25-99
WASTEWATER ENGINEERING

STREET & BRIDGE ENGINEERING

STORMWATER ENGINEERING

Audrey Rimer 3/2/99
CONSTRUCTION

Jim Mahan 2/25/99

OTHER DEPARTMENTS

PLANNING AND DEVELOPMENT

SPONSOR DEPARTMENT

CITY ENGINEER 3-2-99 DATE

DIRECTOR OF PUBLIC WORKS AND ENGINEERING 3/3/99 DATE

SUBMITTED:
SCALE: NONE
NONE
DATE:12/4/98
SURVEY BY:
F B NO:

DESIGNED BY: JMC
DRAWN BY: MBB
DWG. NO. : I31
SHT NO 47 of 159 SHTS

CITY DWG NO:
35001

CADD DWG FILE NO : K:\BBI-AS\I32.DWG
FILE DATE--OPERATOR:

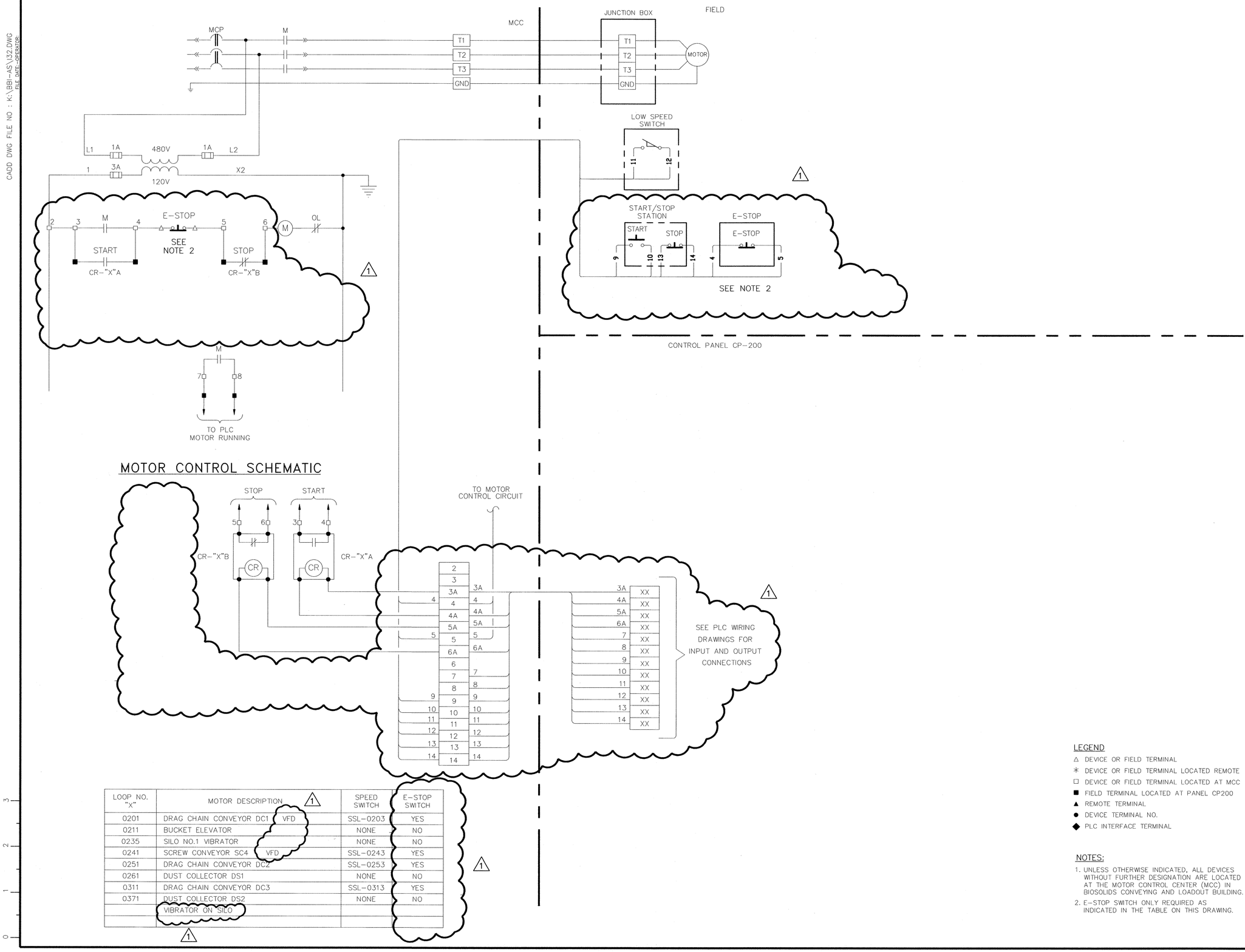

LOOP NO. "X"	MOTOR DESCRIPTION		SPEED SWITCH	E-STOP SWITCH
0201	DRAG CHAIN CONVEYOR DC1	VFD	SSL-0203	YES
0211	BUCKET ELEVATOR		NONE	NO
0235	SILO NO.1 VIBRATOR		NONE	NO
0241	SCREW CONVEYOR SC4	VFD	SSL-0243	YES
0251	DRAG CHAIN CONVEYOR DC2		SSL-0253	YES
0261	DUST COLLECTOR DS1		NONE	NO
0311	DRAG CHAIN CONVEYOR DC3		SSL-0313	YES
0371	DUST COLLECTOR DS2		NONE	NO
	VIBRATOR ON SILO			

LEGEND

- △ DEVICE OR FIELD TERMINAL
- ✳ DEVICE OR FIELD TERMINAL LOCATED REMOTE
- □ DEVICE OR FIELD TERMINAL LOCATED AT MCC
- ■ FIELD TERMINAL LOCATED AT PANEL CP200
- ▲ REMOTE TERMINAL
- ● DEVICE TERMINAL NO.
- ◆ PLC INTERFACE TERMINAL

NOTES:

1. UNLESS OTHERWISE INDICATED, ALL DEVICES WITHOUT FURTHER DESIGNATION ARE LOCATED AT THE MOTOR CONTROL CENTER (MCC) IN BIOSOLIDS CONVEYING AND LOADOUT BUILDING.
2. E-STOP SWITCH ONLY REQUIRED AS INDICATED IN THE TABLE ON THIS DRAWING.

REV NO	DESCRIPTION	APP'D	DATE
1	AS BUILT DRAWING	DJR	12/01
A	REVISED WIRING	JMC	6-12-00

SEAL

STATE OF TEXAS
DAVID J. ROSS
68267
REGISTERED PROFESSIONAL ENGINEER

David J Ross 1/25/02

SEAL

intellex CORPORATION
CONTROL SYSTEMS ENGINEERS
11230 WILCREST GREEN Houston, Texas 77042

CH2M HILL
7500 West Tidwell Road, Suite 400
Houston Tx 77040
713.462.0161

Binkley & Barfield, Inc.
Consulting Engineers
1710 Seamist Drive Houston, Texas 77008

ALMEDA SIMS
BIOSOLIDS
DRYER REHABILITATION

CIP NO 0298-05-3
FILE NO: 4289-4

WIRING DIAGRAM
MOTOR CONTROL SCHEMATIC
BIOSOLIDS CONVEYING BUILDING

CITY OF HOUSTON

DEPARTMENT OF PUBLIC WORKS AND ENGINEERING
ENGINEERING, CONSTRUCTION AND REAL ESTATE GROUP

SECTION APPROVALS

WATER ENGINEERING
TRAFFIC AND SIGNAL ENGINEERING
WASTEWATER ENGINEERING
STREET & BRIDGE ENGINEERING
STORMWATER ENGINEERING
CONSTRUCTION

OTHER DEPARTMENTS

PLANNING AND DEVELOPMENT
SPONSOR DEPARTMENT

CITY ENGINEER DATE

DIRECTOR OF PUBLIC WORKS AND ENGINEERING DATE

SUBMITTED:
SCALE: NONE
NONE
DATE: 1/12/99
SURVEY BY: N/A
F B NO:

DESIGNED BY: JMC
DRAWN BY: RDF
DWG. NO. : I32
SHT NO 48 of 159 SHTS
CITY DWG NO: 35001

ORIGINAL SCALE IN INCHES FOR REDUCED PLANS
0 1 2 3

CADD DWG FILE NO : K:\BBI-AS\132.DWG
FILE DATE--OPERATOR:

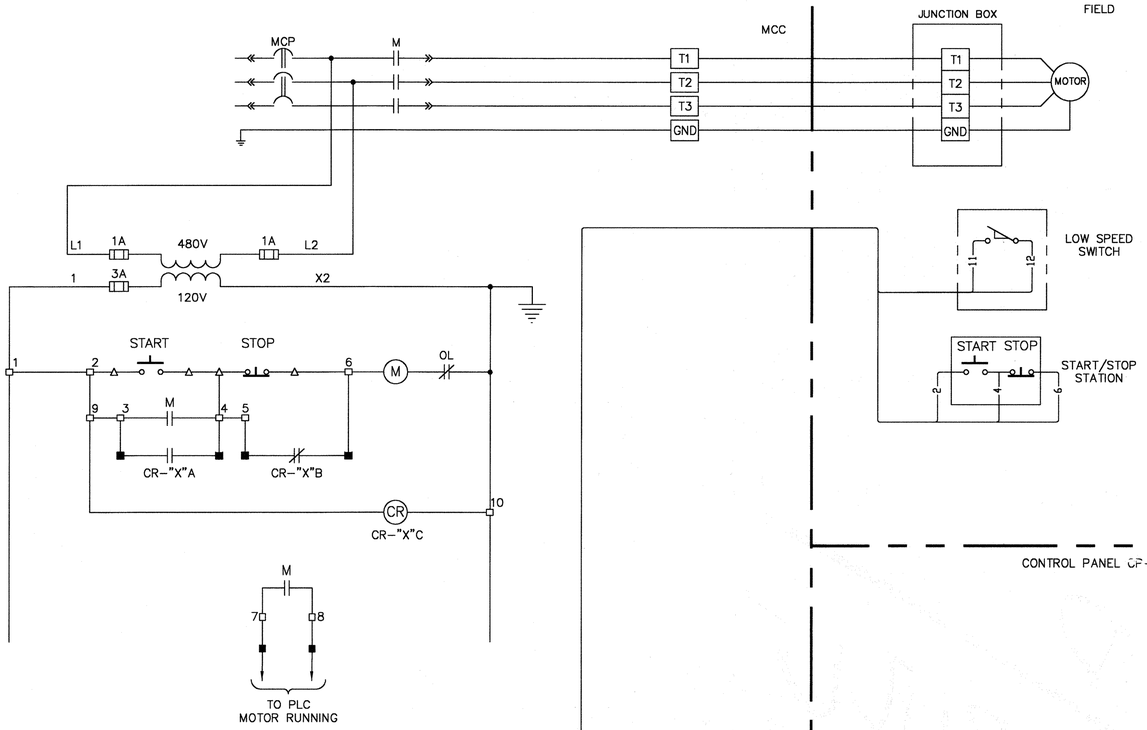

MOTOR CONTROL SCHEMATIC

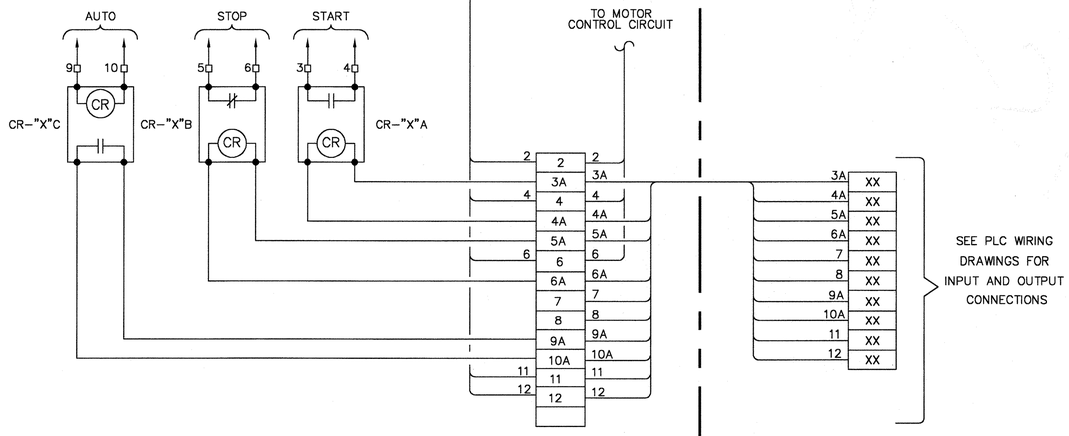

LOOP NO. "X"	MOTOR DESCRIPTION	SPEED SWITCH
0201	DRAG CHAIN CONVEYOR DC1	SSL-0203
0211	BUCKET ELEVATOR	NONE
0241	SCREW CONVEYOR SC4	SSL-0243
0251	DRAG CHAIN CONVEYOR DC2	SSL-0253
0261	DUST COLLECTOR DS1	NONE
0311	DRAG CHAIN CONVEYOR DC3	SSL-0313
0371	DUST COLLECTOR DS2	NONE

LEGEND
- △ DEVICE OR FIELD TERMINAL LOCATED AT MOTOR
- * DEVICE OR FIELD TERMINAL LOCATED REMOTE
- □ DEVICE OR FIELD TERMINAL LOCATED AT MCC
- ■ FIELD TERMINAL LOCATED AT PANEL CP200
- ▲ REMOTE TERMINAL
- ● DEVICE TERMINAL NO.
- ◆ PLC INTERFACE TERMINAL

NOTES:
1. UNLESS OTHERWISE INDICATED, ALL DEVICES WITHOUT FURTHER DESIGNATION ARE LOCATED AT THE MOTOR CONTROL CENTER (MCC) IN BIOSOLIDS CONVEYING AND LOADOUT BUILDING.

REV NO	DESCRIPTION	APP'D	DATE

SEAL

SEAL
STATE OF TEXAS
JESSE M. CARR III
P.E. 52288
REGISTERED PROFESSIONAL ENGINEER
2-1999

intellex CORPORATION
CONTROL SYSTEMS ENGINEERS
11230 WILCREST GREEN Houston, Texas 77042

CH2M HILL
7600 West Tidwell Road, Suite 400
Houston Tx 77040
713.462.0161

Binkley & Barfield, Inc.
Consulting Engineers
1710 Seamist Drive Houston, Texas 77008

ALMEDA SIMS
BIOSOLIDS
DRYER REHABILITATION

CIP NO 0298-05-3
FILE NO: 4289-4

WIRING DIAGRAM
MOTOR CONTROL SCHEMATIC
BIOSOLIDS CONVEYING BUILDING

CITY OF HOUSTON
DEPARTMENT OF PUBLIC WORKS AND ENGINEERING
ENGINEERING, CONSTRUCTION AND REAL ESTATE GROUP

SECTION APPROVALS

WATER ENGINEERING
TRAFFIC AND SIGNAL ENGINEERING
WASTEWATER ENGINEERING 2-25-99
STREET & BRIDGE ENGINEERING
STORMWATER ENGINEERING
CONSTRUCTION 3/1/99
2/25/99

OTHER DEPARTMENTS

PLANNING AND DEVELOPMENT
SPONSOR DEPARTMENT
CITY ENGINEER 3-2-99 DATE
DIRECTOR OF PUBLIC WORKS AND ENGINEERING 3/8/99 DATE

SUBMITTED:
SCALE: NONE
NONE
DATE:1/12/99
SURVEY BY: N/A
F B NO:

DESIGNED BY: JMC
DRAWN BY: RDF
DWG. NO. : 132
SHT NO 48 of 159 SHTS
CITY DWG NO:
35001

ORIGINAL SCALE IN INCHES FOR REDUCED PLANS
0 1 2 3

CADD DWG FILE NO : K:\RBI-AS\133.DWG
FILE DATE-OPERATOR:

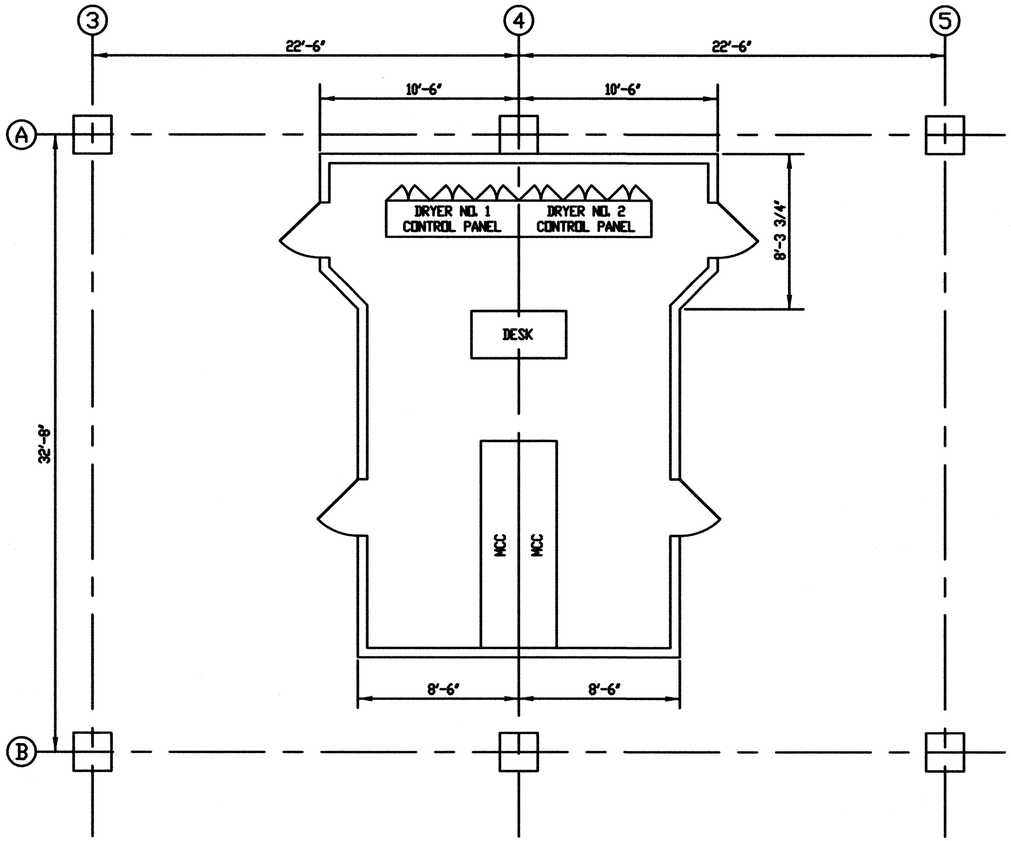

EXISTING CONTROL ROOM LAYOUT

SCALE: 1/4" = 1'-0"

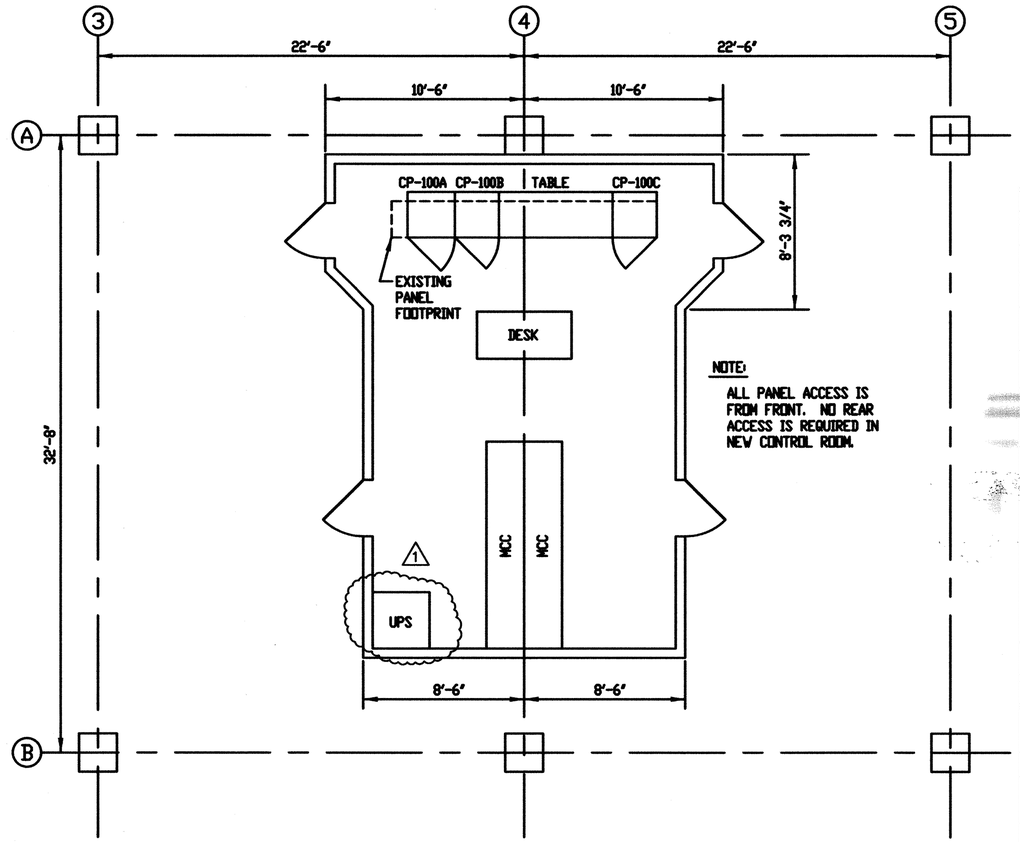

NOTE:
ALL PANEL ACCESS IS FROM FRONT. NO REAR ACCESS IS REQUIRED IN NEW CONTROL ROOM.

NEW CONTROL ROOM LAYOUT

SCALE: 1/4" = 1'-0"

NOTES:

1. CONTRACTOR SHALL REMOVE EXISTING DRYER CONTROL PANELS, AND REPLACE WITH CONTROL CABINETS CP-100A, CP-100B AND CP-100C AS SHOWN.
2. FOR CONSTRUCTION SEQUENCE, CONTRACTOR SHALL REMOVE DRYER NO.1 CONTROL PANEL FIRST AND REPLACE WITH CP-100A AND CP-100B. AFTER RESTORING DRYER NO.1 TO OPERATION, CONTRACTOR SHALL REMOVE DRYER NO.2 CONTROL PANEL. SEE SECTION 01115 FOR OTHER SEQUENCE OF CONSTRUCTION INFORMATION.

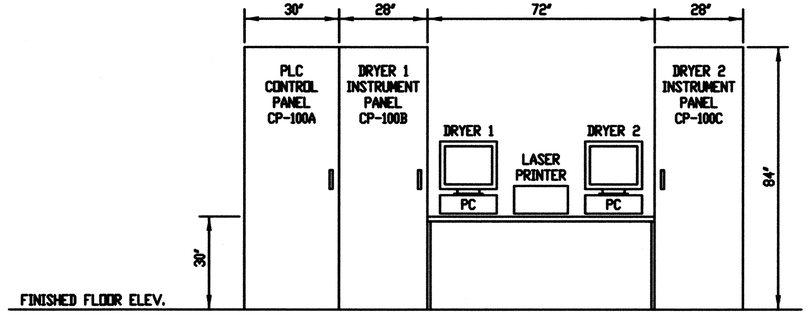

NEW CONTROL PANEL ELEVATION VIEW

SCALE: 1/2" = 1'-0"

ORIGINAL SCALE IN INCHES
FOR REDUCED PLANS
0 1 2 3

REV NO	DESCRIPTION	APP'D	DATE
1	AS BUILT DRAWING	DJR	12/01

SEAL
STATE OF TEXAS
DAVID J. ROSS
68267
REGISTERED PROFESSIONAL ENGINEER
1/25/02

SEAL
AS-BUILT
1/25/02

intellex CORPORATION
CONTROL SYSTEMS ENGINEERS
11230 WILCREST GREEN Houston, Texas 77042

RATNALA & BAHL, INC.
Engineers • Architects • Surveyors
11767 KATY FREEWAY, SUITE 510
HOUSTON, TEXAS 77079

CH2M HILL
7600 West Tidwell Road, Suite 400
Houston Tx 77040
713.462.0161

Binkley & Barfield, Inc.
Consulting Engineers
1710 Seamist Drive Houston, Texas 77008

ALMEDA SIMS
BIOSOLIDS
DRYER REHABILITATION

CIP NO 0298-05-3
FILE NO: 4289-4

INSTRUMENT LOCATION PLAN
CONTROL ROOM LAYOUT
BIOSOLIDS DRYER BUILDING

CITY OF HOUSTON
DEPARTMENT OF PUBLIC WORKS AND ENGINEERING
ENGINEERING, CONSTRUCTION AND REAL ESTATE GROUP

SECTION APPROVALS

WATER ENGINEERING
TRAFFIC AND SIGNAL ENGINEERING
WASTEWATER ENGINEERING
STREET & BRIDGE ENGINEERING
STORMWATER ENGINEERING
CONSTRUCTION

OTHER DEPARTMENTS

PLANNING AND DEVELOPMENT
SPONSOR DEPARTMENT

CITY ENGINEER — DATE
DIRECTOR OF PUBLIC WORKS AND ENGINEERING — DATE

SUBMITTED:
SCALE: AS NOTED
NONE
DATE: 12/4/98
SURVEY BY:
F B NO:

DESIGNED BY: JMC
DRAWN BY: RDF
DWG. NO. : 133
SHT NO 49 of 159 SHTS
CITY DWG NO:
35001

CADD DWG FILE NO : K:\RBI-AS\133.DWG
FILE DATE-SEPTEMBER

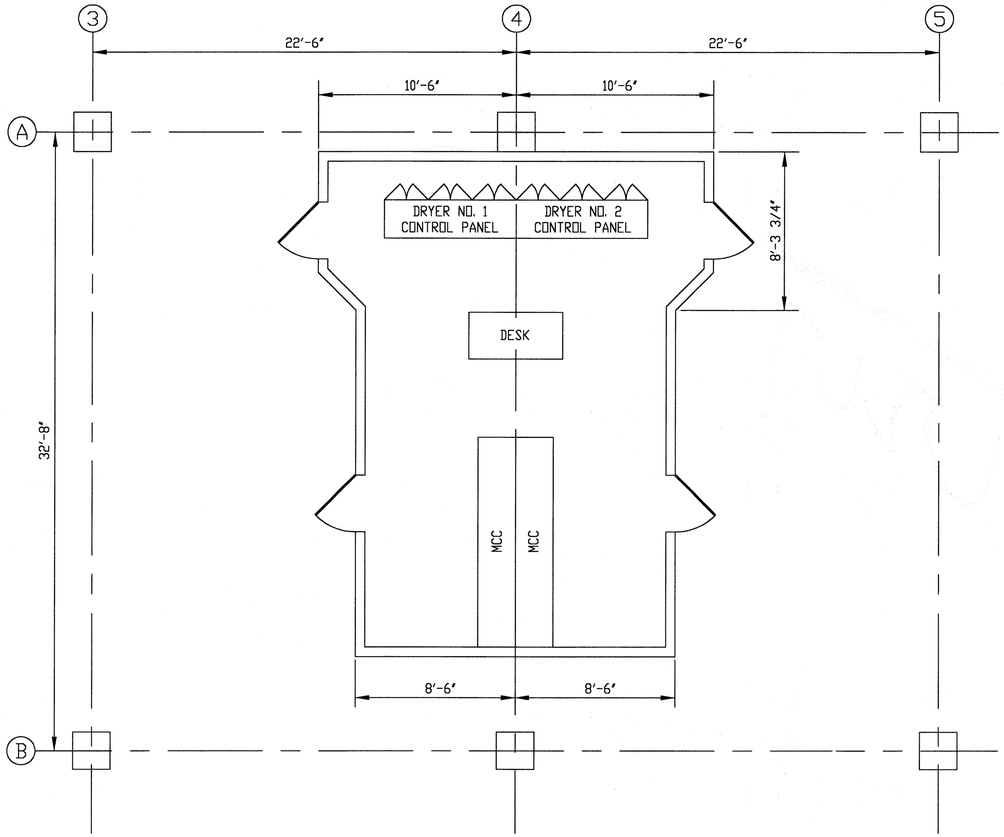

EXISTING CONTROL ROOM LAYOUT

SCALE: 1/4" = 1'-0"

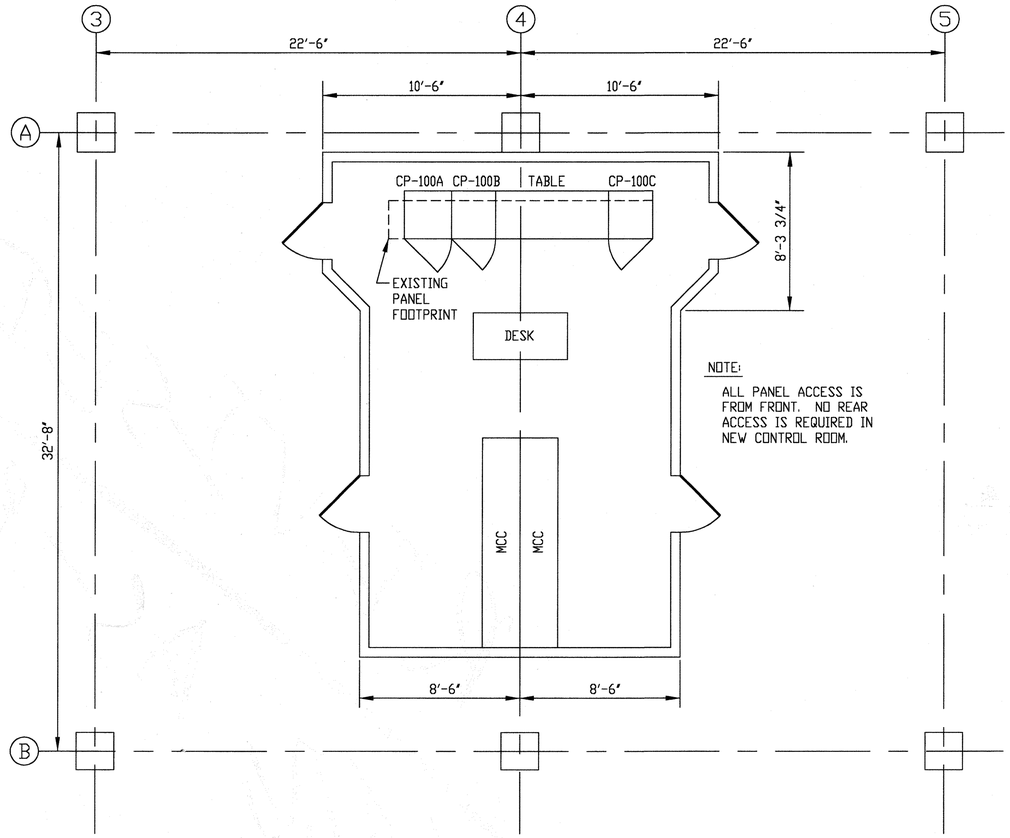

NOTE:
ALL PANEL ACCESS IS FROM FRONT. NO REAR ACCESS IS REQUIRED IN NEW CONTROL ROOM.

NEW CONTROL ROOM LAYOUT

SCALE: 1/4" = 1'-0"

NOTES:

1. CONTRACTOR SHALL REMOVE EXISTING DRYER CONTROL PANELS, AND REPLACE WITH CONTROL CABINETS CP-100A, CP-100B AND CP-100C AS SHOWN.
2. FOR CONSTRUCTION SEQUENCE, CONTRACTOR SHALL REMOVE DRYER NO.1 CONTROL PANEL FIRST AND REPLACE WITH CP-100A AND CP-100B. AFTER RESTORING DRYER NO.1 TO OPERATION, CONTRACTOR SHALL REMOVE DRYER NO.2 CONTROL PANEL. SEE SECTION 01115 FOR OTHER SEQUENCE OF CONSTRUCTION INFORMATION.

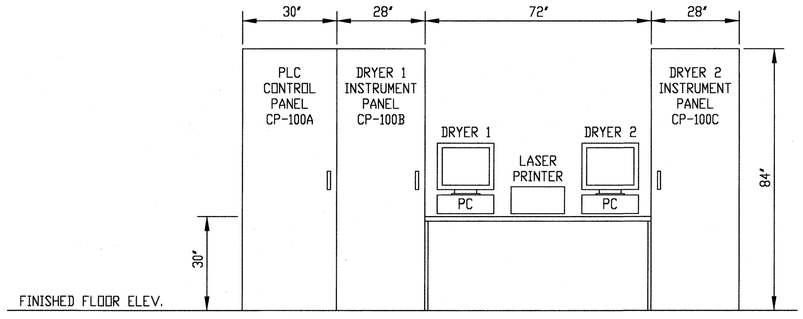

NEW CONTROL PANEL ELEVATION VIEW

SCALE: 1/2" = 1'-0"

REV NO	DESCRIPTION	APP'D	DATE

SEAL

SEAL
STATE OF TEXAS
JESSE M. CARR III
52288
REGISTERED PROFESSIONAL ENGINEER
2-24-99

intellex CORPORATION
CONTROL SYSTEMS ENGINEERS
11230 WILCREST GREEN Houston, Texas 77042

RATNALA & BAHL, INC.
Engineers • Architects • Surveyors
11767 KATY FREEWAY. SUITE 510
HOUSTON, TEXAS 77079

CH2M HILL
7600 West Tidwell Road, Suite 400
Houston Tx 77040
713.462.0161

Binkley & Barfield, Inc.
Consulting Engineers
1710 Seamist Drive Houston, Texas 77008

ALMEDA SIMS
BIOSOLIDS
DRYER REHABILITATION

CIP NO 0298-05-3
FILE NO: 4289-4

INSTRUMENT LOCATION PLAN
CONTROL ROOM LAYOUT
BIOSOLIDS DRYER BUILDING

CITY OF HOUSTON
DEPARTMENT OF PUBLIC WORKS AND ENGINEERING
ENGINEERING, CONSTRUCTION AND REAL ESTATE GROUP

SECTION APPROVALS

WATER ENGINEERING
TRAFFIC AND SIGNAL ENGINEERING
WASTEWATER ENGINEERING 2-25-99
STREET & BRIDGE ENGINEERING
STORMWATER ENGINEERING
CONSTRUCTION 3/2/99
3/2/99

OTHER DEPARTMENTS

PLANNING AND DEVELOPMENT
SPONSOR DEPARTMENT
CITY ENGINEER 3-2-99 DATE
DIRECTOR OF PUBLIC WORKS AND ENGINEERING 3/5/99 DATE

SUBMITTED:
SCALE: AS NOTED
NONE
DATE:12/4/98
SURVEY BY:
F B NO:

DESIGNED BY: JMC
DRAWN BY: RDF
DWG. NO. : 133
SHT NO 49 of 159 SHTS
CITY DWG NO:
35001

ORIGINAL SCALE IN INCHES FOR REDUCED PLANS
0 1 2 3

CADD DWG FILE NO : K:\BBI-AS\134.DWG
FILE DATE--OPERATOR:

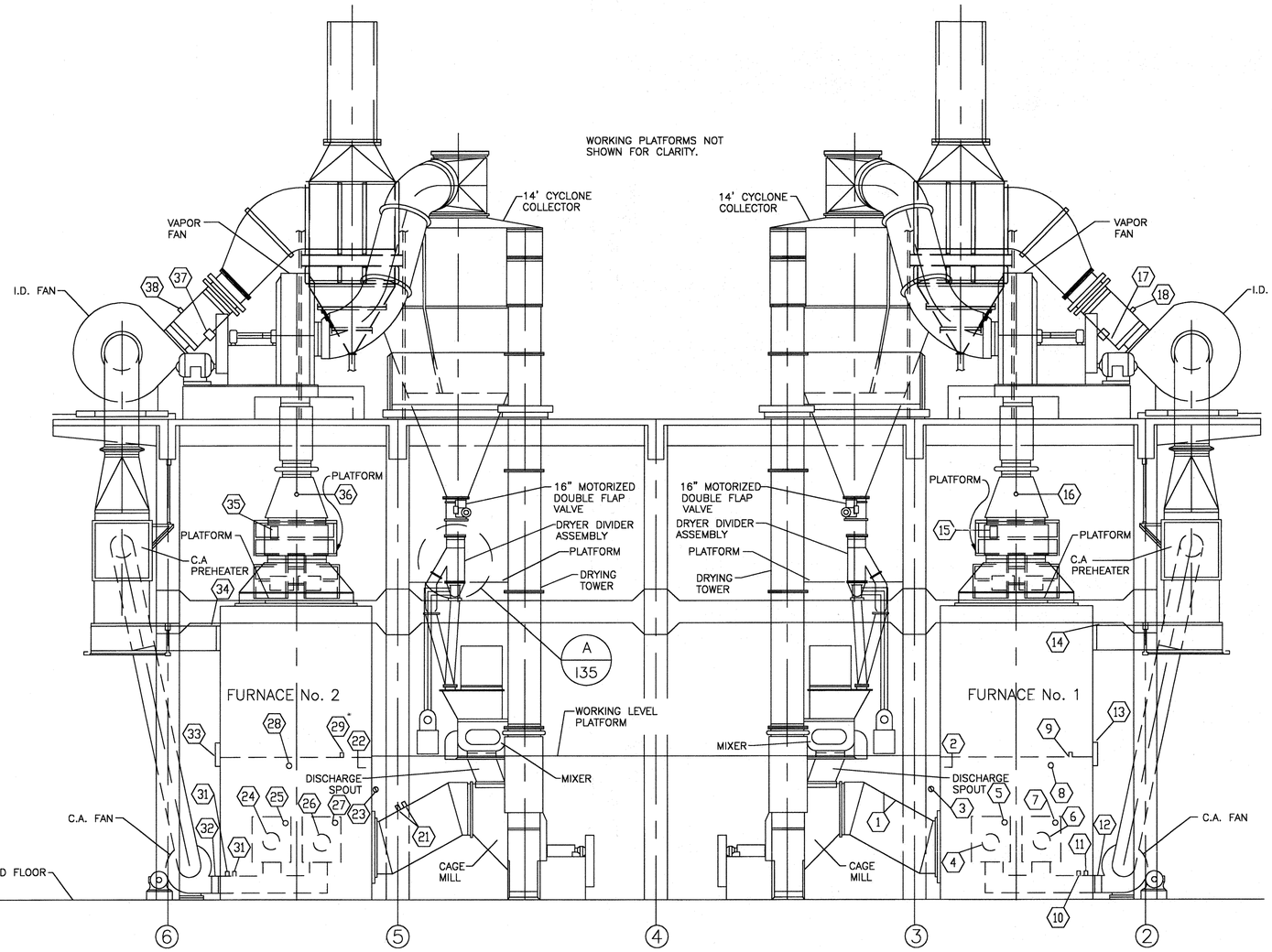

TYPICAL SECTION THRU SLDGE DRYING EQUIPMENT

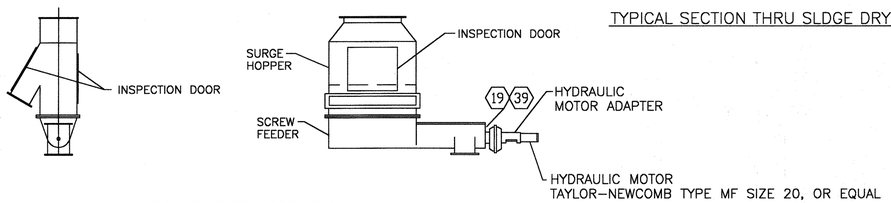

DRY DIVIDER ASSEMBLY

SECTION A/134
N.T.S.

KEYED NOTES

1. FURNACE OUTLET TEMPERATURE, TE-1239 AND TE-1240 (REPLACE)
2. FURNACE TEMPERATURE, TE-1236 (REPLACE)
3. FURNACE GAS FLOWMETER (NO CHANGE)
4. RIGHT BURNER FLAME SCANNER, BE-1190 (REPLACE)
5. RIGHT BURNER TEMPERATURE, TE-1238 (REPLACE)
6. LEFT BURNER FLAME SCANNER, BE-1180 (REPLACE)
7. LEFT BURNER TEMPERATURE, TE-1237 (REPLACE)
8. 1" DRAFT PRESSURE CONNECTION TO PT-1233
9. FURNACE TEMPERATURE, TE-1235 (REPLACE)
10. COMBUSTION AIR TEMPERATURE, TE-1232 (REPLACE)
11. 1" COMBUSTION AIR PRESSURE TO PT-1231
12. COMBUSTION AIR DAMPER ACTUATOR, ZD-1100 (REPLACE)
13. PRE-HEATER PROTECTION DOOR ACTUATOR, ZD-1234 (REPLACE)
14. FURNACE VAPOR TEMPERATURE, TE-1212 (REPLACE)
15. VAPOR FAN DAMPER, ZD-1210 (NO CHANGE)
16. VAPOR FAN OUTLET TEMPERATURE, TE-1211 (NEW)
17. ID FAN DAMPER ACTUATOR, ZD-1225 (NO CHANGE)
18. VAPOR TO DUST COLLECTOR TEMPERATURE, TE-1224 (NEW)
19. DRY DIVIDER SPEED TRANSMITTER, ST-1343 (NEW)

21. SAME AS NOTE 1 EXCEPT TE-2239, TE-2240
22. SAME AS NOTE 2 EXCEPT TE-2236
23. SAME AS NOTE 3
24. SAME AS NOTE 4 EXCEPT BE-2190
25. SAME AS NOTE 5 EXCEPT TE-2238
26. SAME AS NOTE 6 EXCEPT BE-2180
27. SAME AS NOTE 7 EXCEPT TE-2237
28. SAME AS NOTE 8 EXCEPT PT-2233
29. SAME AS NOTE 9 EXCEPT TE-2235
30. SAME AS NOTE 10 EXCEPT TE-2232
31. SAME AS NOTE 11 EXCEPT PT-2231
32. SAME AS NOTE 12 EXCEPT ZD-2100
33. SAME AS NOTE 13 EXCEPT ZD-2234
34. SAME AS NOTE 14 EXCEPT TE-2212
35. NEW VAPOR FAN DAMPER, ZD-2210
36. NEW CONNECTION AND NEW TEMPERATURE ELEMENT, TE-2211
37. SAME AS NOTE 17 EXCEPT ZD-2225
38. SAME AS NOTE 18 EXCEPT TE-2224
39. SAME AS NOTE 19 EXCEPT ST-2343

NOTES:

1. REPLACE ALL EXISTING THERMOCOUPLES (TE-XXXX) WITH NEW DUAL ELEMENT TYPE K THERMOCOUPLES.
2. REPLACE ALL EXISTING TYPE K THERMOCOUPLE EXTENSION WIRE FROM ELEMENT TO CONTROL PANEL. REPAIR ALL DAMAGED CONDUIT; REPLACE ALL MISSING CONDUIT BODY COVERS.
3. ALL EXISTING PIPING TO CONTROL ROOM FOR PRESSURE MEASUREMENTS AND INSTRUMENT AIR SIGNALS WILL BE REUSED, BUT CONNECTED TO NEW PRESSURE TRANSMITTERS OR I/P TRANSDUCERS IN THE CONTROL PANEL. CONTRACTOR SHALL BLOWOUT AND CLEAN PIPING PRIOR TO CONNECTION TO NEW INSTRUMENTATION.

REV NO	DESCRIPTION	APP'D	DATE

SEAL: AS-BUILT — Darrell Ross

SEAL: STATE OF TEXAS — JESSE M. CARR III — 52288 — REGISTERED PROFESSIONAL ENGINEER — 2-24-99

intellex CORPORATION
CONTROL SYSTEMS ENGINEERS
11230 WILCREST GREEN Houston, Texas 77042

CH2M HILL
7600 West Tidwell Road, Suite 400
Houston Tx 77040
713.462.0161

Binkley & Barfield, Inc.
Consulting Engineers
1710 Seamist Drive Houston, Texas 77008

ALMEDA SIMS
BIOSOLIDS
DRYER REHABILITATION

CIP NO 0298-05-3
FILE NO: 4289-4

INSTRUMENT LOCATION PLAN
BIOSOLIDS DRYERS
EQUIPMENT SOUTH VIEW

CITY OF HOUSTON
DEPARTMENT OF PUBLIC WORKS AND ENGINEERING
ENGINEERING, CONSTRUCTION AND REAL ESTATE GROUP

SECTION APPROVALS

WATER ENGINEERING
TRAFFIC AND SIGNAL ENGINEERING
WASTEWATER ENGINEERING — Hamid Hamrick 2-25-99
STREET & BRIDGE ENGINEERING
STORMWATER ENGINEERING
CONSTRUCTION — 3/2/99
Zia Mohammad 2/25/99

OTHER DEPARTMENTS

PLANNING AND DEVELOPMENT
SPONSOR DEPARTMENT
CITY ENGINEER — 3-2-99 DATE
DIRECTOR OF PUBLIC WORKS AND ENGINEERING — 3/5/99 DATE

SUBMITTED:
SCALE: NONE
NONE
DATE: 1-19-99
SURVEY BY: N/A
F B NO:

DESIGNED BY: DJR
DRAWN BY: JRR
DWG. NO. : 134
SHT NO 50 of 159 SHTS
CITY DWG NO: 35001

ORIGINAL SCALE IN INCHES FOR REDUCED PLANS
0 1 2 3

CADD DWG FILE NO : K:\BBI-AS\135.DWG
FILE DATE--OPERATOR:

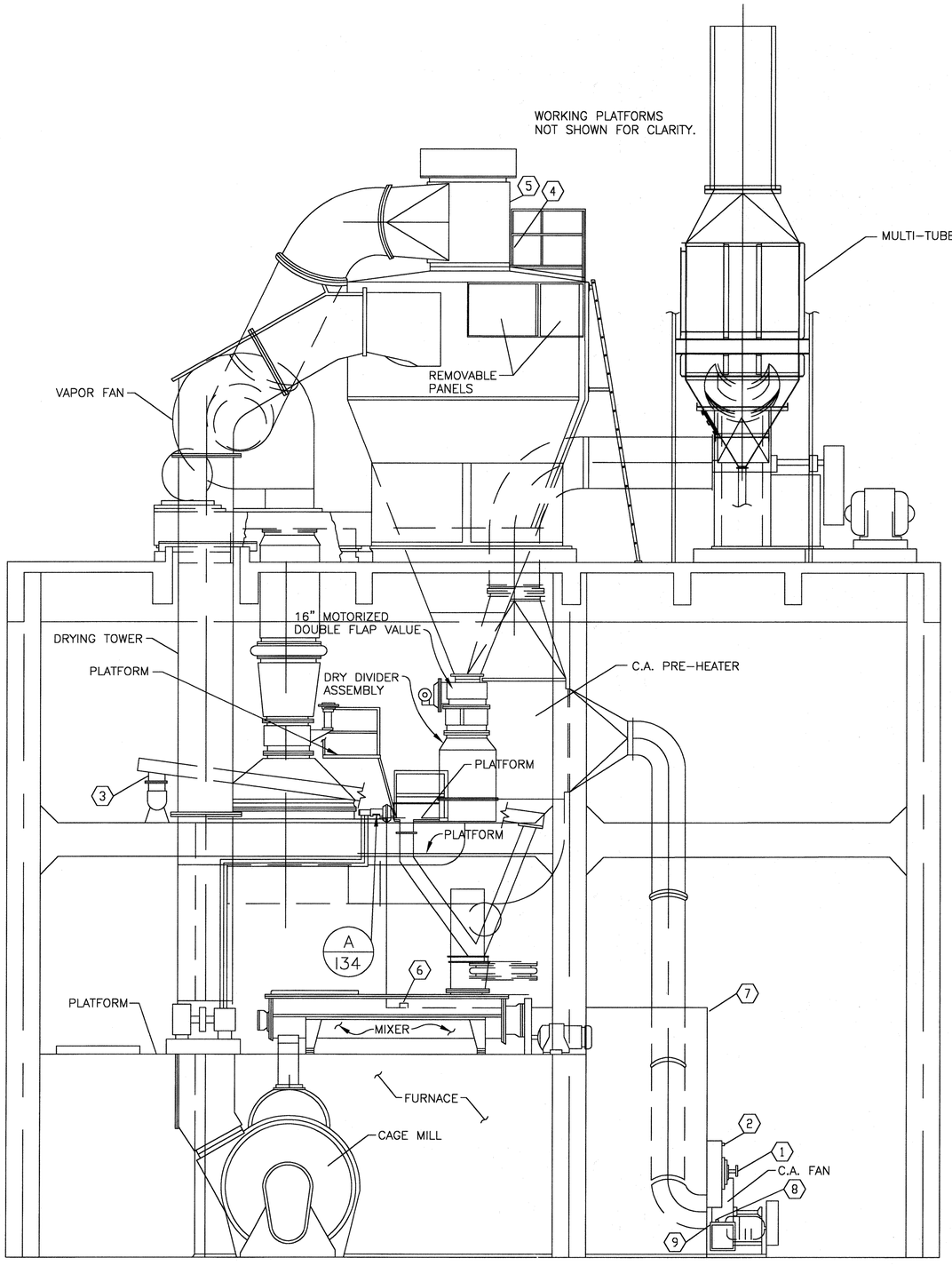

FURNACE NO. 2
END SECTION

SECTION A 135
SCALE: 1"=4'

KEYED NOTES

1. FLAME SCANNER (BE-1180, BE-1190, BE-2180, BE-2190) (REPLACED)
2. BURNER TEMPERATURE (TE-1237, TE-1238, TE-2237, TE-2238) (REPLACED)
3. DIVERTER GATE WITH LIMIT SWITCHES (ZS-1320A/B, ZS-2320A/B) (REPLACE LIMIT SWITCHES)
4. CYCLONE COLLECTOR OUTLET TEMPERATURE (TE-1333, TE-2333) (REPLACE)
5. CYCLONE COLLECTOR OUTLET TEMPERATURE (TE-1334, TE-2334) (REPLACE)
6. DEODORIZING PRE-HEATER TEMPERATURE (TE-1236, TE-2236) (REPLACE)
7. 1" PIPE FOR BOILER DRAFT PRESSURE TO PT-2233 (PT-1233) (NEW TRANSMITTERS)
8. COMBUSTION AIR TEMPERATURE (TE-1232, TE-2232) (REPLACE)
9. 1" CROSS WITH 3/8" PIPE FOR WINDBOX PRESSURE TO PT-2231 (PT-1231) (NEW TRANSMITTERS)

NOTES:

1. TYPICAL LOCATIONS FOR INSTRUMENTATION FOR BOTH FURNACE NO. 1 AND FURNACE NO. 2 ARE NOTED ON THIS DRAWING.
2. REPLACE ALL EXISTING THERMOCOUPLES (TE-XXXX) WITH NEW DUAL ELEMENT TYPE K THERMOCOUPLES.
3. REPLACE ALL EXISTING TYPE K THERMOCOUPLE EXTENSION WIRE FROM ELEMENT TO CONTROL PANEL. REPAIR ALL DAMAGED CONDUIT; REPLACE ALL MISSING CONDUIT BODY COVERS.
4. ALL EXISTING PIPING TO CONTROL ROOM FOR PRESSURE MEASUREMENTS WILL BE REUSED, BUT CONNECTED TO NEW PRESSURE TRANSMITTERS IN THE CONTROL PANEL. CONTRACTOR SHALL BLOWOUT AND CLEAN PIPING PRIOR TO CONNECTION TO NEW INSTRUMENTATION.

REV NO	DESCRIPTION	APP'D	DATE

SEAL: AS-BUILT 1/25/02

SEAL: STATE OF TEXAS — JESSE M. CARR III — 52288 — REGISTERED PROFESSIONAL ENGINEER — 2-24-99

intellex CORPORATION
CONTROL SYSTEMS ENGINEERS
11230 WILCREST GREEN Houston, Texas 77042

CH2M HILL
7600 West Tidwell Road, Suite 400
Houston Tx 77040
713.462.0161

Binkley & Barfield, Inc.
Consulting Engineers
1710 Seamist Drive Houston, Texas 77008

ALMEDA SIMS
BIOSOLIDS
DRYER REHABILITATION

CIP NO 0298-05-3
FILE NO: 4289-4

INSTRUMENT LOCATION PLAN
BIOSOLIDS DRYERS
SIDE ELEVATION VIEW

CITY OF HOUSTON
DEPARTMENT OF PUBLIC WORKS AND ENGINEERING
ENGINEERING, CONSTRUCTION AND REAL ESTATE GROUP

SECTION APPROVALS

WATER ENGINEERING

TRAFFIC AND SIGNAL ENGINEERING

WASTEWATER ENGINEERING — Hamid Yousefi 2-25-99

STREET & BRIDGE ENGINEERING

STORMWATER ENGINEERING — Zia Mahmood 2/25/99

CONSTRUCTION — Courtney Pace 3/2/99

OTHER DEPARTMENTS

PLANNING AND DEVELOPMENT

SPONSOR DEPARTMENT

CITY ENGINEER — 3-2-99 DATE

DIRECTOR OF PUBLIC WORKS AND ENGINEERING — 3/3/99 DATE

SUBMITTED:
SCALE: NONE
NONE
DATE:
SURVEY BY: N/A
F B NO:

DESIGNED BY: DJR
DRAWN BY: JRR
DWG. NO. : 135
SHT NO 51 of 159 SHTS

CITY DWG NO:
35001

ORIGINAL SCALE IN INCHES FOR REDUCED PLANS
0 1 2 3

CADD DWG FILE NO : K:\BBI-AS\136.DWG
FILE DATE-OPERATOR:

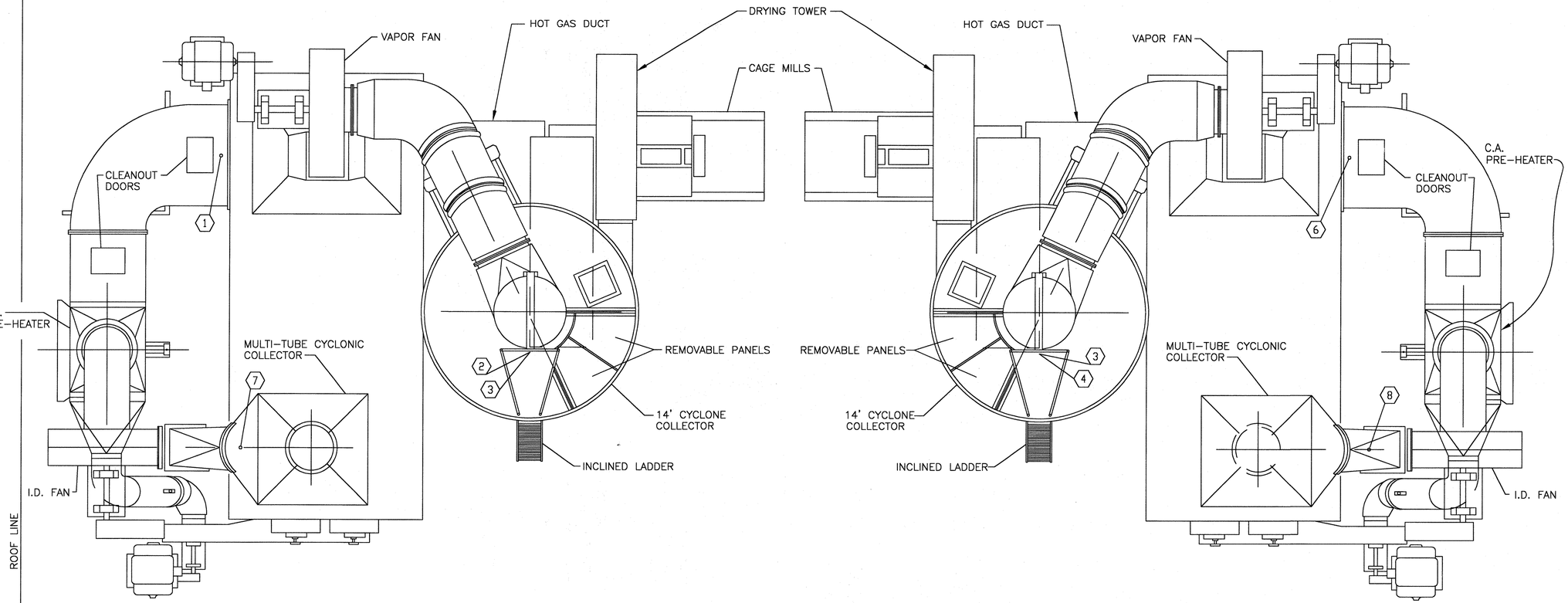

FURNACE NO. 1

FURNACE NO. 2

KEYED NOTES

1. VAPOR TO PRE-HEATER TEMPERATURE, TE-1212 (EXISTING, REPLACE)
2. CYCLONE COLLECTOR OUTLET TEMPERATURE, TE-1333 (EXISTING, REPLACE)
3. CYCLONE COLLECTOR OUTLET TEMPERATURE, TE-1334 (EXISTING, REPLACE)
4. CYCLONE COLLECTOR OUTLET TEMPERATURE, TE-2333 (EXISTING, REPLACE)
5. CYCLONE COLLECTOR OUTLET TEMPERATURE, TE-2334 (EXISTING, REPLACE)
6. VAPOR TO PRE-HEATER TEMPERATURE, TE-2212 (EXISTING, REPLACE)
7. VAPOR TO DUST COLLECTOR TEMPERATURE, TE-1224 - ADD COUPLING AND ELEMENT.
8. VAPOR TO DUST COLLECTOR TEMPERATURE, TE-2224 - ADD COUPLING AND ELEMENT.

DRYER ROOM - EQUIPMENT PLAN

NOTES:

1. REPLACE ALL EXISTING THERMOCOUPLES (TE-XXXX) WITH NEW DUAL ELEMENT TYPE K THERMOCOUPLES.
2. REPLACE ALL EXISTING TYPE K THERMOCOUPLE EXTENSION WIRE FROM ELEMENT TO CONTROL PANEL. REPAIR ALL DAMAGED CONDUIT; REPLACE ALL MISSING CONDUIT BODY COVERS.
3. FOR THERMOCOUPLES TE-1224 AND TE-2224, ADD NEW CONDUIT WITH THERMOCOUPLE EXTENSION WIRE TO CONTROL ROOM.

ORIGINAL SCALE IN INCHES FOR REDUCED PLANS
0 1 2 3

REV NO	DESCRIPTION	APP'D	DATE

SEAL — AS-BUILT 1/23/02

SEAL — STATE OF TEXAS, JESSE M. CARR III, 52288, REGISTERED PROFESSIONAL ENGINEER, 2-24-99

intellex CORPORATION
CONTROL SYSTEMS ENGINEERS
11230 WILCREST GREEN Houston, Texas 77042

CH2M HILL
7600 West Tidwell Road, Suite 400
Houston Tx 77040
713.462.0161

Binkley & Barfield, Inc.
Consulting Engineers
1710 Seamist Drive Houston, Texas 77008

ALMEDA SIMS BIOSOLIDS DRYER REHABILITATION

CIP NO 0298-05-3
FILE NO: 4289-4

INSTRUMENT LOCATION PLAN
BIOSOLIDS DRYERS
EQUIPMENT TOP VIEW

CITY OF HOUSTON
DEPARTMENT OF PUBLIC WORKS AND ENGINEERING
ENGINEERING, CONSTRUCTION AND REAL ESTATE GROUP

SECTION APPROVALS

WATER ENGINEERING — TRAFFIC AND SIGNAL ENGINEERING

WASTEWATER ENGINEERING 2-25-99 — STREET & BRIDGE ENGINEERING

STORMWATER ENGINEERING — CONSTRUCTION 2/26/99

3/25/99

OTHER DEPARTMENTS

PLANNING AND DEVELOPMENT — SPONSOR DEPARTMENT

CITY ENGINEER 3-2-99 DATE

DIRECTOR OF PUBLIC WORKS AND ENGINEERING 3/5/99 DATE

SUBMITTED:
SCALE: NONE
NONE
DATE:
SURVEY BY: N/A
F B NO:

DESIGNED BY: DJR
DRAWN BY: JRR
DWG. NO. : 136
SHT NO 52 of 159 SHTS
CITY DWG NO:
35001

CADD DWG FILE NO : K:\RBI-AS\137.DWG
FILE DATE-OPERATOR:

KEYED NOTES:

1. SILO NO. 1 SLIDE GATE WITH LIMIT SWITCH ZS-0233.
2. SILO NO. 1 LEVEL TRANSMITTER LT-0230.
3. SILO NO. 1 TEMPERATURE ELEMENT TE-0231.
4. DIVERTER VALVE WITH LIMIT SWITCHES ZS-0222A, ZS-0222B.
5. CONVEYOR SC-4 DISCHARGE PLUGGED CHUTE SWITCH LSH-0301.

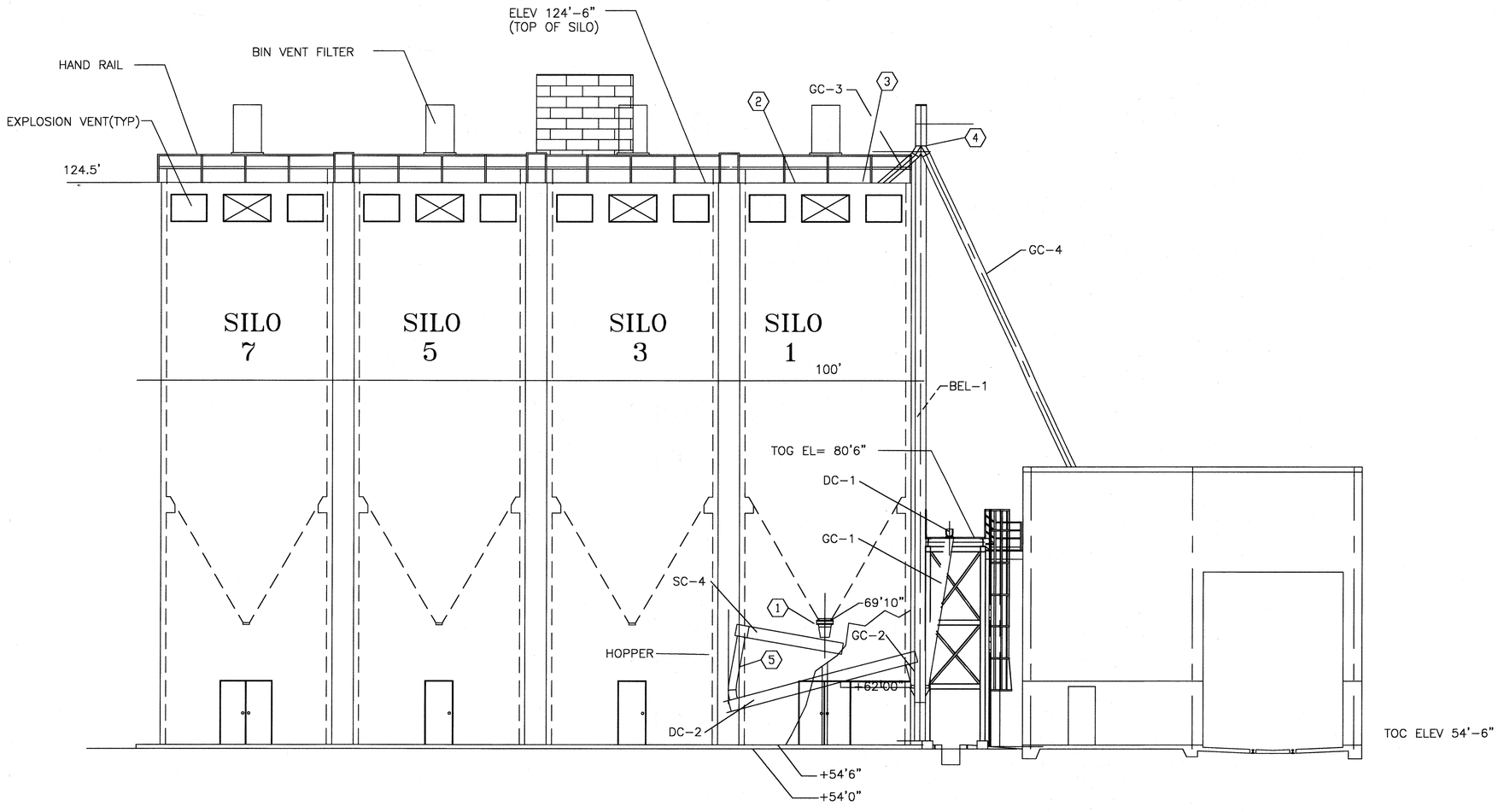

ORIGINAL SCALE IN INCHES FOR REDUCED PLANS
0 1 2 3

REV NO	DESCRIPTION	APP'D	DATE

SEAL

AS-BUILT
1/25/02

SEAL

STATE OF TEXAS
JESSE M. CARR III
52288
REGISTERED
PROFESSIONAL ENGINEER
2-26-99

intellex CORPORATION
CONTROL SYSTEMS ENGINEERS
11230 WILCREST GREEN Houston, Texas 77042

RATNALA & BAHL, INC.
Engineers • Architects • Surveyors
11767 KATY FREEWAY, SUITE 510
HOUSTON, TEXAS 77079

CH2M HILL
7600 West Tidwell Road, Suite 400
Houston Tx 77040
713.462.0161

Binkley & Barfield, Inc.
Consulting Engineers
1710 Seamist Drive Houston, Texas 77008

ALMEDA SIMS
BIOSOLIDS
DRYER REHABILITATION

CIP NO 0298-05-3
FILE NO: 4289-4

INSTRUMENT LOCATION PLAN
BIOSOLIDS CONVEYING & LOADOUT
SECTION VIEW

CITY OF HOUSTON
DEPARTMENT OF PUBLIC WORKS AND ENGINEERING
ENGINEERING, CONSTRUCTION AND REAL ESTATE GROUP

SECTION APPROVALS

WATER ENGINEERING
TRAFFIC AND SIGNAL ENGINEERING
WASTEWATER ENGINEERING 2-25-99
STREET & BRIDGE ENGINEERING
STORMWATER ENGINEERING
CONSTRUCTION
2-25-99

OTHER DEPARTMENTS

PLANNING AND DEVELOPMENT
SPONSOR DEPARTMENT
CITY ENGINEER 3-2-99 DATE
DIRECTOR OF PUBLIC WORKS AND ENGINEERING 3/5/99 DATE

SUBMITTED:
SCALE: 1/8" = 1'-0
NONE
DATE:12/4/98
SURVEY BY:
F B NO:

DESIGNED BY: JMC
DRAWN BY: MBB
DWG. NO. : 137
SHT NO 53 of 159 SHTS
CITY DWG NO:
35001

CADD DWG FILE NO : K:\RBI-AS\138.DWG
FILE DATE--OPERATOR:

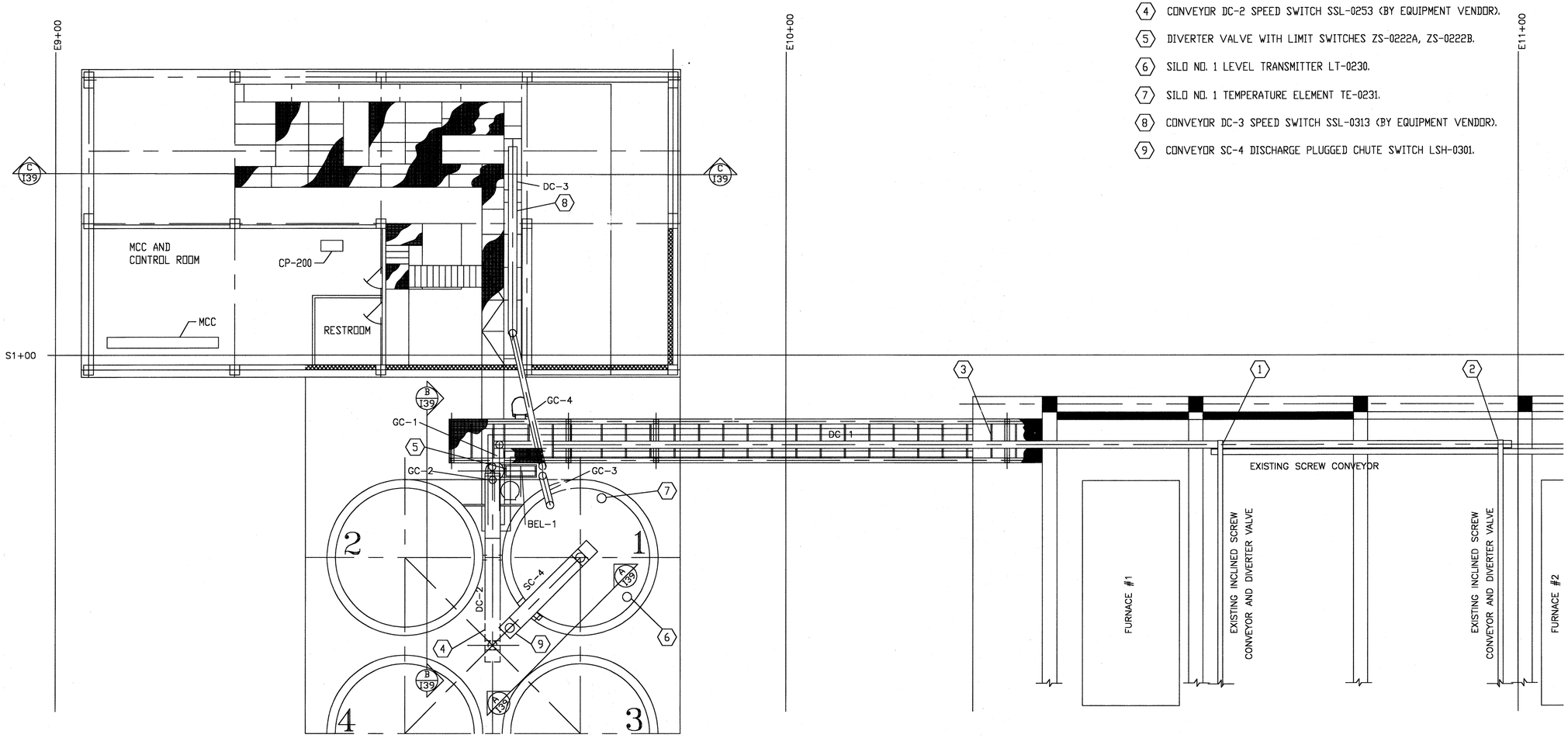

KEYED NOTES:

1. DIVERTER GATE WITH NEW LIMIT SWITCHES ZS-1320A, ZS-1320B.
2. DIVERTER GATE WITH NEW LIMIT SWITCHES ZS-2320A, ZS-2320B.
3. CONVEYOR DC-1 SPEED SWITCH SSL-0203 (BY EQUIPMENT VENDOR).
4. CONVEYOR DC-2 SPEED SWITCH SSL-0253 (BY EQUIPMENT VENDOR).
5. DIVERTER VALVE WITH LIMIT SWITCHES ZS-0222A, ZS-0222B.
6. SILO NO. 1 LEVEL TRANSMITTER LT-0230.
7. SILO NO. 1 TEMPERATURE ELEMENT TE-0231.
8. CONVEYOR DC-3 SPEED SWITCH SSL-0313 (BY EQUIPMENT VENDOR).
9. CONVEYOR SC-4 DISCHARGE PLUGGED CHUTE SWITCH LSH-0301.

CONVEYOR LAYOUT

ORIGINAL SCALE IN INCHES FOR REDUCED PLANS
0 1 2 3

REV NO	DESCRIPTION	APP'D	DATE

SEAL: AS-BUILT David Bass 1/25/02

SEAL: STATE OF TEXAS — JESSE M. CARR III — 52288 — REGISTERED PROFESSIONAL ENGINEER — 2-24-99

intellex CORPORATION
CONTROL SYSTEMS ENGINEERS
11230 WILCREST GREEN Houston, Texas 77042

RATNALA & BAHL, INC.
Engineers • Architects • Surveyors
11767 KATY FREEWAY. SUITE 510
HOUSTON, TEXAS 77079

CH2M HILL
7600 West Tidwell Road, Suite 400
Houston Tx 77040
713.462.0161

Binkley & Barfield, Inc.
Consulting Engineers
1710 Seamist Drive Houston, Texas 77008

ALMEDA SIMS
BIOSOLIDS
DRYER REHABILITATION

CIP NO 0298-05-3
FILE NO: 4289-4

INSTRUMENT LOCATION PLAN
BIOSOLIDS CONVEYING
AND LOADOUT

CITY OF HOUSTON
DEPARTMENT OF PUBLIC WORKS AND ENGINEERING
ENGINEERING, CONSTRUCTION AND REAL ESTATE GROUP

SECTION APPROVALS

WATER ENGINEERING
TRAFFIC AND SIGNAL ENGINEERING
WASTEWATER ENGINEERING — 2-25-99
STREET & BRIDGE ENGINEERING
STORMWATER ENGINEERING
CONSTRUCTION — 3/2/99
3/3/99

OTHER DEPARTMENTS

PLANNING AND DEVELOPMENT
SPONSOR DEPARTMENT
CITY ENGINEER — 3-2-99 DATE
DIRECTOR OF PUBLIC WORKS AND ENGINEERING — 3/5/99 DATE

SUBMITTED:
SCALE: 1/8" = 1'-0
NONE
DATE: 12/4/98
SURVEY BY:
F B NO:

DESIGNED BY: JMC
DRAWN BY: MBB
DWG. NO. : 138
SHT NO 54 of 159 SHTS
CITY DWG NO:
35001

CADD DWG FILE NO : K:\RBI-AS\139.DWG
FILE DATE-OPERATOR:

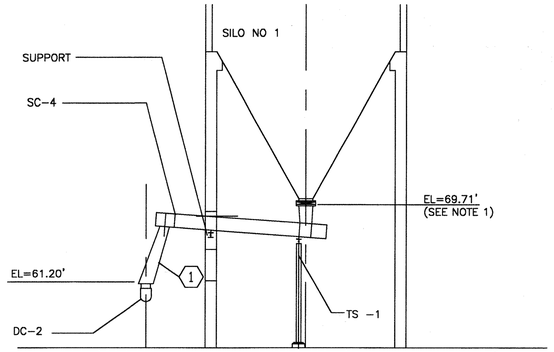

SECTION A-A

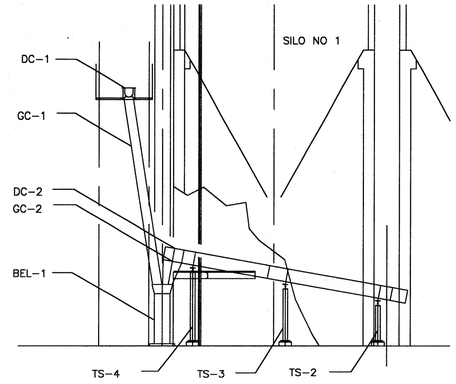

SECTION B-B

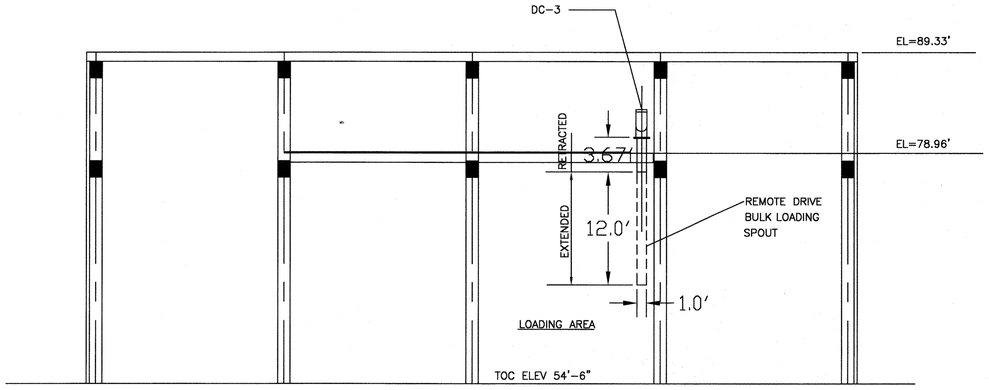

SECTION C-C

KEYED NOTES:

(1) CONVEYOR SC-4 DISCHARGE PLUGGED CHUTE SWITCH LSH-0301.

REV NO	DESCRIPTION	APP'D	DATE

SEAL

AS-BUILT
Darrell Dean 1/25/02

SEAL

STATE OF TEXAS
JESSE M. CARR III
92288
REGISTERED
PROFESSIONAL
ENGINEER
2-24-99

intellex CORPORATION
CONTROL SYSTEMS ENGINEERS
11230 WILCREST GREEN Houston, Texas 77042

RATNALA & BAHL, INC.
Engineers • Architects • Surveyors
11767 KATY FREEWAY, SUITE 510
HOUSTON, TEXAS 77079

CH2M HILL
7600 West Tidwell Road, Suite 400
Houston Tx 77040
713.462.0161

Binkley & Barfield, Inc.
Consulting Engineers
1710 Seamist Drive Houston, Texas 77008

ALMEDA SIMS
BIOSOLIDS
DRYER REHABILITATION

CIP NO 0298-05-3
FILE NO: 4289-4

INSTRUMENT LOCATION PLAN
BIOSOLIDS CONVEYING & LOADOUT
SECTION VIEWS

CITY OF HOUSTON
DEPARTMENT OF PUBLIC WORKS AND ENGINEERING
ENGINEERING, CONSTRUCTION AND REAL ESTATE GROUP

SECTION APPROVALS

WATER ENGINEERING

TRAFFIC AND SIGNAL ENGINEERING

WASTEWATER ENGINEERING 2-25-99

STREET & BRIDGE ENGINEERING

STORMWATER ENGINEERING

CONSTRUCTION 2/26/99

2/25/99

OTHER DEPARTMENTS

PLANNING AND DEVELOPMENT

SPONSOR DEPARTMENT

CITY ENGINEER 3-2-99 DATE

DIRECTOR OF PUBLIC WORKS AND ENGINEERING 3/3/99 DATE

SUBMITTED:
SCALE: 1/8" = 1'-0"
NONE
DATE:12/4/98
SURVEY BY:
F B NO:

DESIGNED BY: JMC
DRAWN BY: MBB
DWG. NO. : 139
SHT NO 55 of 159 SHTS

CITY DWG NO:
35001

ORIGINAL SCALE IN INCHES
FOR REDUCED PLANS
0 1 2 3

CADD DWG FILE NO : K:\BBI-AS\140.DWG
FILE DATE-OPERATOR

INSTRUMENTATION CABLE SCHEDULE

CABLE NO.	WIRE 1	WIRE 2	WIRE 3	SERVICE	CABLE TYPE	CABLE SPEC	ORIGIN	DESTINATION	COMMENTS
0201-C1	Blk	Wht		Drag Chain Conveyor DC-1 Start	2- #14	THWN/THHN	MCC	CP-200	New wiring from CP-200
0201-C2	Blk	Wht		Drag Chain Conveyor DC-1 Stop	2- #14	THWN/THHN	MCC	CP-200	New wiring from CP-200
0201-C3	Blk	Wht		Drag Chain Conveyor DC-1 Run Status	2- #14	THWN/THHN	MCC	CP-200	New wiring from CP-200
0202-C1	Blk	Red	Blu	Drag Chain Conveyor DC-1 Hand-Off-Auto Switch	3- #14	THWN/THHN	Field	MCC	New wiring from HS-0202 to MCC
0202-C2	Blk	Wht		Drag Chain Conveyor DC-1 Auto Mode	2- #14	THWN/THHN	MCC	CP-200	New wiring from CP-200
0203-C1	Blk	Wht		Drag Chain Conveyor DC-1 Speed Switch	2- #14	THWN/THHN	Field	CP-200	New wiring to CP-200 from SSL-0203
0211-C1	Blk	Wht		Bucket Elevator BEL-1 Start	2- #14	THWN/THHN	MCC	CP-200	New wiring from CP-200
0211-C2	Blk	Wht		Bucket Elevator BEL-1 Stop	2- #14	THWN/THHN	MCC	CP-200	New wiring from CP-200
0211-C3	Blk	Wht		Bucket Elevator BEL-1 Run Status	2- #14	THWN/THHN	MCC	CP-200	New wiring from CP-200
0212-C1	Blk	Red	Blu	Bucket Elevator BEL-1 Hand-Off-Auto Switch	3- #14	THWN/THHN	Field	MCC	New wiring from HS-0202 to MCC
0212-C2	Blk	Wht		Bucket Elevator BEL-1 Auto Mode	2- #14	THWN/THHN	MCC	CP-200	New wiring from CP-200
0222-C1	Blk	Wht		Gravity Chute Selector Loadout Limit Switch	2- #14	THWN/THHN	ZS-0222A	CP-200	New wiring from CP-200
0222-C2	Blk	Wht		Gravity Chute Selector Silo Limit Switch	2- #14	THWN/THHN	ZS-0222B	CP-200	New wiring from CP-200
0222-C3	Blk	Wht		Gravity Chute Selector Solenoid Valve	2- #14	THWN/THHN	SV-0221	CP-200	New wiring from CP-200
0230-P1	Blk	Wht	Grn	Silo Level Transmitter Power (24 VAC)	2- #14	THWN/THHN	Panel CP-200	LT-0230	New wiring from Service Panel
0230-S1	Red	Blk	Shld	Silo Level Transmitter	PR #16 Sh	Section 16126	LT-0230	CP-200	New wiring from CP-200
0230-S2	Blk	Wht	Shld	Silo Level Transmitter Communications	PR #16 Sh	Section 16126	LT-0230	CP-200	New wiring from CP-200
0231A-E1	Red	Yel	Shld	Silo Temperature	PR #18 KTX	Section 16127	TE-0231A	CP-200	New wiring from CP-200
0231B-E1	Red	Yel	Shld	Silo Temperature	PR #18 KTX	Section 16127	TE-0231B	CP-200	New wiring from CP-200
0231C-E1	Red	Yel	Shld	Silo Temperature	PR #18 KTX	Section 16127	TE-0231C	CP-200	New wiring from CP-200
0231D-E1	Red	Yel	Shld	Silo Temperature	PR #18 KTX	Section 16127	TE-0231D	CP-200	New wiring from CP-200
0231E-E1	Red	Yel	Shld	Silo Temperature	PR #18 KTX	Section 16127	TE-0231E	CP-200	New wiring from CP-200
0231F-E1	Red	Yel	Shld	Silo Temperature	PR #18 KTX	Section 16127	TE-0231F	CP-200	New wiring from CP-200
0231G-E1	Red	Yel	Shld	Silo Temperature	PR #18 KTX	Section 16127	TE-0231G	CP-200	New wiring from CP-200
0231H-E1	Red	Yel	Shld	Silo Temperature	PR #18 KTX	Section 16127	TE-0231H	CP-200	New wiring from CP-200
0231I-E1	Red	Yel	Shld	Silo Temperature	PR #18 KTX	Section 16127	TE-0231I	CP-200	New wiring from CP-200
0231J-E1	Red	Yel	Shld	Silo Temperature	PR #18 KTX	Section 16127	TE-0231J	CP-200	New wiring from CP-200
0231K-E1	Red	Yel	Shld	Silo Temperature	PR #18 KTX	Section 16127	TE-0231K	CP-200	New wiring from CP-200
0231L-E1	Red	Yel	Shld	Silo Temperature	PR #18 KTX	Section 16127	TE-0231L	CP-200	New wiring from CP-200
0231M-E1	Red	Yel	Shld	Silo Temperature	PR #18 KTX	Section 16127	TE-0231M	CP-200	New wiring from CP-200
0231N-E1	Red	Yel	Shld	Silo Temperature	PR #18 KTX	Section 16127	TE-0231N	CP-200	New wiring from CP-200
0231O-E1	Red	Yel	Shld	Silo Temperature	PR #18 KTX	Section 16127	TE-0231O	CP-200	New wiring from CP-200
0231P-E1	Red	Yel	Shld	Silo Temperature	PR #18 KTX	Section 16127	TE-0231P	CP-200	New wiring from CP-200
0231Q-E1	Red	Yel	Shld	Silo Temperature	PR #18 KTX	Section 16127	TE-0231Q	CP-200	New wiring from CP-200
0231R-E1	Red	Yel	Shld	Silo Temperature	PR #18 KTX	Section 16127	TE-0231R	CP-200	New wiring from CP-200
0231S-E1	Red	Yel	Shld	Silo Temperature	PR #18 KTX	Section 16127	TE-0231S	CP-200	New wiring from CP-200
0231T-E1	Red	Yel	Shld	Silo Temperature	PR #18 KTX	Section 16127	TE-0231T	CP-200	New wiring from CP-200
0231U-E1	Red	Yel	Shld	Silo Temperature	PR #18 KTX	Section 16127	TE-0231U	CP-200	New wiring from CP-200
0231V-E1	Red	Yel	Shld	Silo Temperature	PR #18 KTX	Section 16127	TE-0231V	CP-200	New wiring from CP-200
0231W-E1	Red	Yel	Shld	Silo Temperature	PR #18 KTX	Section 16127	TE-0231W	CP-200	New wiring from CP-200
0231X-E1	Red	Yel	Shld	Silo Temperature	PR #18 KTX	Section 16127	TE-0231X	CP-200	New wiring from CP-200
0231Y-E1	Red	Yel	Shld	Silo Temperature	PR #18 KTX	Section 16127	TE-0231Y	CP-200	New wiring from CP-200
0231Z-E1	Red	Yel	Shld	Silo Temperature	PR #18 KTX	Section 16127	TE-0231Z	CP-200	New wiring from CP-200
0233-C1	Blk	Wht		Silo Slide Gate Open Limit Switch	2- #14	THWN/THHN	ZS-0233A	CP-200	New wiring from CP-200
0233-C2	Blk	Wht		Silo Slide Gate Close Limit Switch	2- #14	THWN/THHN	ZS-0233B	CP-200	New wiring from CP-200
0233-C3	Blk	Wht		Silo Slide Gate Open/Close Solenoid Valve	2- #14	THWN/THHN	SV-0232	CP-200	New wiring from CP-200
0241-C1	Blk	Wht		Screw Conveyor SC-4 Start	2- #14	THWN/THHN	MCC	CP-200	New wiring from CP-200
0241-C2	Blk	Wht		Screw Conveyor SC-4 Stop	2- #14	THWN/THHN	MCC	CP-200	New wiring from CP-200
0241-C3	Blk	Wht		Screw Conveyor SC-4 Run Status	2- #14	THWN/THHN	MCC	CP-200	New wiring from CP-200
0242-C1	Blk	Red	Blu	Screw Conveyor SC-4 Hand-Off-Auto Switch	3- #14	THWN/THHN	Field	MCC	New wiring from HS-0242 to MCC
0242-C2	Blk	Wht		Screw Conveyor SC-4 Auto Mode	2- #14	THWN/THHN	MCC	CP-200	New wiring from CP-200
0243-C1	Blk	Wht		Screw Conveyor SC-4 Speed Switch	2- #14	THWN/THHN	Field	CP-200	New wiring to CP-200 from SSL-0243
0251-C1	Blk	Wht		Drag Chain Conveyor DC-2 Start	2- #14	THWN/THHN	MCC	CP-200	New wiring from CP-200
0251-C2	Blk	Wht		Drag Chain Conveyor DC-2 Stop	2- #14	THWN/THHN	MCC	CP-200	New wiring from CP-200
0251-C3	Blk	Wht		Drag Chain Conveyor DC-2 Run Status	2- #14	THWN/THHN	MCC	CP-200	New wiring from CP-200
0252-C1	Blk	Red	Blu	Drag Chain Conveyor DC-2 Hand-Off-Auto Switch	3- #14	THWN/THHN	Field	MCC	New wiring from HS-0252 to MCC
0252-C2	Blk	Wht		Drag Chain Conveyor DC-2 Auto Mode	2- #14	THWN/THHN	MCC	CP-200	New wiring from CP-200
0253-C1	Blk	Wht		Drag Chain Conveyor DC-2 Speed Switch	2- #14	THWN/THHN	Field	CP-200	New wiring to CP-200 from SSL-0253
0261-C1	Blk	Wht		Dust Collector DS-1 Start	2- #14	THWN/THHN	MCC	CP-200	New wiring from CP-200
0261-C2	Blk	Wht		Dust Collector DS-1 Stop	2- #14	THWN/THHN	MCC	CP-200	New wiring from CP-200
0261-C3	Blk	Wht		Dust Collector DS-1 Run Status	2- #14	THWN/THHN	MCC	CP-200	New wiring from CP-200
0262-C1	Blk	Red	Blu	Dust Collector DS-1 Hand-Off-Auto Switch	3- #14	THWN/THHN	Field	MCC	New wiring from HS-0262 to MCC
0301-C1	Blk	Wht		Conveyor SC-4 Discharge Plugged Chute Switch	2- #14	THWN/THHN	LSH-0301	CP-200	New wiring from CP-200
0301-P1	Blk	Wht	Grn	Conveyor SC-4 Discharge Plugged Chute Switch Power	3- #14	THWN/THHN	120V Service Pnl	LSH-0301	New wiring from Service Panel
0311-C1	Blk	Wht		Drag Chain Conveyor DC-3 Start	2- #14	THWN/THHN	MCC	CP-200	New wiring from CP-200
0311-C2	Blk	Wht		Drag Chain Conveyor DC-3 Stop	2- #14	THWN/THHN	MCC	CP-200	New wiring from CP-200
0311-C3	Blk	Wht		Drag Chain Conveyor DC-3 Run Status	2- #14	THWN/THHN	MCC	CP-200	New wiring from CP-200
0312-C1	Blk	Red	Blu	Drag Chain Conveyor DC-3 Hand-Off-Auto Switch	3- #14	THWN/THHN	Field	MCC	New wiring from HS-0312 to MCC
0312-C2	Blk	Wht		Drag Chain Conveyor DC-3 Auto Mode	2- #14	THWN/THHN	MCC	CP-200	New wiring from CP-200
0313-C1	Blk	Wht		Drag Chain Conveyor DC-3 Speed Switch	2- #14	THWN/THHN	Field	CP-200	New wiring to CP-200 from SSL-0313

REV NO	DESCRIPTION	APP'D	DATE

SEAL
AS-BUILT
Darrel Ross 1/25/02

SEAL
STATE OF TEXAS
JESSE M. CARR III
52288
REGISTERED PROFESSIONAL ENGINEER
2-26-99

intellex CORPORATION
CONTROL SYSTEMS ENGINEERS
11230 WILCREST GREEN Houston, Texas 77042

CH2M HILL
7600 West Tidwell Road, Suite 400
Houston Tx 77040
713.462.0161

Binkley & Barfield, Inc.
Consulting Engineers
1710 Seamist Drive Houston, Texas 77008

ALMEDA SIMS
BIOSOLIDS
DRYER REHABILITATION

CIP NO 0298-05-3
FILE NO: 4289-4

INSTRUMENT CABLE SCHEDULE
SHEET 1

CITY OF HOUSTON
DEPARTMENT OF PUBLIC WORKS AND ENGINEERING
ENGINEERING, CONSTRUCTION AND REAL ESTATE GROUP

SECTION APPROVALS

WATER ENGINEERING
TRAFFIC AND SIGNAL ENGINEERING
WASTEWATER ENGINEERING 2-25-99
STREET & BRIDGE ENGINEERING
STORMWATER ENGINEERING 2/25/99
CONSTRUCTION 3/2/99

OTHER DEPARTMENTS

PLANNING AND DEVELOPMENT
SPONSOR DEPARTMENT

CITY ENGINEER DATE 3-2-99
DIRECTOR OF PUBLIC WORKS AND ENGINEERING DATE 3/5/99

SUBMITTED:
SCALE: NONE
NONE
DATE:
SURVEY BY: N/A
F B NO:

DESIGNED BY: JMC
DRAWN BY: MBB
DWG. NO. : 140
SHT NO 56 of 159 SHTS
CITY DWG NO:
35001

ORIGINAL SCALE IN INCHES FOR REDUCED PLANS
0 1 2 3

CADD DWG FILE NO : K:\BBI-AS\141.DWG
FILE DATE-OPERATOR:

INSTRUMENTATION CABLE SCHEDULE

CABLE NO.	WIRE 1	WIRE 2	WIRE 3	SERVICE	CABLE TYPE	CABLE SPEC	ORIGIN	DESTINATION	COMMENTS
0371-C1	Blk	Wht		Dust Collector DS-2 Start	2- #14	THWN/THHN	MCC	CP-200	New wiring from CP-200
0371-C2	Blk	Wht		Dust Collector DS-2 Stop	2- #14	THWN/THHN	MCC	CP-200	New wiring from CP-200
0371-C3	Blk	Wht		Dust Collector DS-2 Run Status	2- #14	THWN/THHN	MCC	CP-200	New wiring from CP-200
0372-C1	Blk	Red	Blu	Dust Collector DS-2 Hand-Off-Auto Switch	3- #14	THWN/THHN	Field	MCC	New wiring from HS-0372 to MCC
1000-C1	Blk	Wht		Dryer # 1 Emergency Stop	2- #14	THWN/THHN	HS-1000A	CP-100A	Local in Panel
1001-C1				Instrument Air Low Pressure	Existing		PSL-1001	CP-100A	Existing - Re-route Conduit to CP-100A - Pull New Wire
1002-C1				Process Air Low Pressure	Existing		PSL-1002	CP-100A	Existing - Re-route Conduit to CP-100A - Pull New Wire
1003-C1				Process Water Low Pressure	Existing		PSL-1003	CP-100A	Existing - Re-route Conduit to CP-100A - Pull New Wire
1101-C1	2-12	2-13		Dryer #1 FSS Low Fire Air Solenoid Valve	2- #14	THWN/THHN	SV-1101	CA CTRL JB	New Wire and Conduit
1101-C2	1-51	1-52		Dryer #1 FSS Low Fire Air Solenoid Valve Relay	2- #14	THWN/THHN	CA CTRL JB	FSS #1 Left	New Wire and Conduit
1101-C3	1-51	1-52		Dryer #1 FSS Low Fire Air Solenoid Valve Relay	2- #14	THWN/THHN	CA CTRL JB	FSS #1 Right	New Wire and Conduit
1101-C4	1-19	1-20		Dryer #1 FSS Low Fire Air Limit Switch	2- #14	THWN/THHN	ZS-1101	FSS #1 Left	New Wire and Conduit
1101-C5	1-19	1-20		Dryer #1 FSS Low Fire Air Limit Switch	2- #14	THWN/THHN	ZS-1101	FSS #1 Right	New Wire and Conduit
1102-C1	2-26	2-27		Dryer #1 FSS Purge Air Solenoid Valve	2- #14	THWN/THHN	SV-1102	CA CTRL JB	New Wire and Conduit
1102-C2	1-55A	1-55B		Dryer #1 FSS Purge Air Solenoid Valve Relay	2- #14	THWN/THHN	CA CTRL JB	FSS #1 Left	New Wire and Conduit
1102-C3	1-55A	1-55B		Dryer #1 FSS Purge Air Solenoid Valve Relay	2- #14	THWN/THHN	CA CTRL JB	FSS #1 Right	New Wire and Conduit
1102-C4	1-23	1-24		Dryer #1 FSS Purge Limit Switch	2- #14	THWN/THHN	ZS-1102	FSS #1 Left	New Wire and Conduit
1102-C5	1-23	1-24		Dryer #1 FSS Purge Limit Switch	2- #14	THWN/THHN	ZS-1102	FSS #1 Right	New Wire and Conduit
1104-C1	1-25	1-26		Dryer #1 FSS Low Air Differential Pressure	2- #14	THWN/THHN	PDSL-1104	FSS #1 Left	New Wire and Conduit
1104-C2	1-25	1-26		Dryer #1 FSS Low Air Differential Pressure	2- #14	THWN/THHN	PDSL-1104	FSS #1 Right	New Wire and Conduit
1105-C1	1-17	1-18		Dryer #1 FSS Combustion Air Low Flow	2- #14	THWN/THHN	FSL-1105	FSS #1 Left	New Wire and Conduit
1105-C2	1-17	1-18		Dryer #1 FSS Combustion Air Low Flow	2- #14	THWN/THHN	FSL-1105	FSS #1 Right	New Wire and Conduit
1110-C1	1-3	1-4		Dryer #1 FSS Instrument Air Low Pressure	2- #14	THWN/THHN	PSL-1110	FSS #1 Left	New Wire and Conduit
1110-C2	1-3	1-4		Dryer #1 FSS Instrument Air Low Pressure	2- #14	THWN/THHN	PSL-1110	FSS #1 Right	New Wire and Conduit
1122-C1	1-9	1-10		Dryer #1 FSS Low Gas Pressure	2- #14	THWN/THHN	PSL-1122	FSS #1 Left	New Wire and Conduit
1122-C2	1-9	1-10		Dryer #1 FSS Low Gas Pressure	2- #14	THWN/THHN	PSL-1122	FSS #1 Right	New Wire and Conduit
1123-C1	1-7	1-8		Dryer #1 FSS High Gas Pressure	2- #14	THWN/THHN	PSH-1123	FSS #1 Left	New Wire and Conduit
1123-C2	1-7	1-8		Dryer #1 FSS High Gas Pressure	2- #14	THWN/THHN	PSH-1123	FSS #1 Right	New Wire and Conduit
1141-C1	1-47	1-48		Dryer #1 FSS Gas Valve 1 Left Burner	2- #14	THWN/THHN	SSV-1141	FSS #1 Left	New Wire and Conduit
1141-C2	1-29	1-30		Dryer #1 FSS Gas Valve 1 Limit Switch Left Burner	2- #14	THWN/THHN	ZS-1141	FSS #1 Left	New Wire and Conduit
1142-C1	1-45	1-46		Dryer #1 FSS Gas Valve 2 Left Burner	2- #14	THWN/THHN	SSV-1142	FSS #1 Left	New Wire and Conduit
1142-C2	1-27	1-28		Dryer #1 FSS Gas Valve 2 Limit Switch Left Burner	2- #14	THWN/THHN	ZS-1142	FSS #1 Left	New Wire and Conduit
1143-C1	1-49	1-50		Dryer #1 FSS Gas Vent Valve Left Burner	2- #14	THWN/THHN	SSV-1143	FSS #1 Left	New Wire and Conduit
1144-C1	1-31A	1-31B		Dryer #1 FSS Gas Cock Limit Switch Left Burner	2- #14	THWN/THHN	ZS-1144	FSS #1 Left	New Wire and Conduit
1146-C1	1-21	1-22		Dryer #1 FSS Low Fire Gas Valve 1 Limit Switch Left Burner	2- #14	THWN/THHN	ZS-1146	FSS #1 Left	New Wire and Conduit
1147-C1	1-53	1-54		Dryer #1 FSS Low Fire Gas Solenoid Valve Left Burner	2- #14	THWN/THHN	SV-1147	FSS #1 Left	New Wire and Conduit
1151-C1	1-41	1-42		Dryer #1 FSS Pilot Gas Valve 1 Left Burner	2- #14	THWN/THHN	SSV-1151	FSS #1 Left	New Wire and Conduit
1152-C1	1-39	1-40		Dryer #1 FSS Pilot Gas Valve 2 Left Burner	2- #14	THWN/THHN	SSV-1152	FSS #1 Left	New Wire and Conduit
1153-C1	1-43	1-44		Dryer #1 FSS Pilot Gas Vent Valve Left Burner	2- #14	THWN/THHN	SSV-1153	FSS #1 Left	New Wire and Conduit
1161-C1	1-47	1-48		Dryer #1 FSS Gas Valve 1 Right Burner	2- #14	THWN/THHN	SSV-1161	FSS #1 Right	New Wire and Conduit
1161-C2	1-29	1-30		Dryer #1 FSS Gas Valve 1 Limit Switch Right Burner	2- #14	THWN/THHN	ZS-1161	FSS #1 Right	New Wire and Conduit
1162-C1	1-45	1-46		Dryer #1 FSS Gas Valve 2 Right Burner	2- #14	THWN/THHN	SSV-1162	FSS #1 Right	New Wire and Conduit
1162-C2	1-27	1-28		Dryer #1 FSS Gas Valve 2 Limit Switch Right Burner	2- #14	THWN/THHN	ZS-1162	FSS #1 Right	New Wire and Conduit
1163-C1	1-49	1-50		Dryer #1 FSS Gas Vent Valve Right Burner	2- #14	THWN/THHN	SSV-1163	FSS #1 Right	New Wire and Conduit
1164-C1	1-31A	1-31B		Dryer #1 FSS Gas Cock Limit Switch Right Burner	2- #14	THWN/THHN	ZS-1164	FSS #1 Right	New Wire and Conduit
1166-C1	1-22A	1-22B		Dryer #1 FSS Low Fire Gas Valve 2 Limit Switch Right Burner	2- #14	THWN/THHN	ZS-1166	FSS #1 Right	New Wire and Conduit
1167-C1	1-53	1-54		Dryer #1 FSS Low Fire Gas Solenoid Valve Right Burner	2- #14	THWN/THHN	SV-1147	FSS #1 Right	New Wire and Conduit
1171-C1	1-41	1-42		Dryer #1 FSS Pilot Gas Valve 1 Right Burner	2- #14	THWN/THHN	SSV-1171	FSS #1 Right	New Wire and Conduit
1172-C1	1-39	1-40		Dryer #1 FSS Pilot Gas Valve 2 Right Burner	2- #14	THWN/THHN	SSV-1172	FSS #1 Right	New Wire and Conduit
1173-C1	1-43	1-44		Dryer #1 FSS Pilot Gas Vent Valve Right Burner	2- #14	THWN/THHN	SSV-1173	FSS #1 Right	New Wire and Conduit
1180-C1				Dryer #1 FSS Right Burner Interface	6- #14	THWN/THHN	FSS #1 Left	FSS #1 Right	New Wire and Conduit
1180-C2	1-37	1-38		Dryer #1 FSS Left Burner Ignition	2- #14	THWN/THHN	Ignition Xmfr	FSS #1 Left	New Wire and Conduit
1180-P1	Blk	Wht	Grn	Dryer #1 FSS Left Burner Power	3- #14	THWN/THHN	Panel XXX	FSS #1 Left	New Wire and Conduit
1180-S1				Dryer #1 FSS Left Burner Flame Scanner	FWE		BE-1180	FSS #1 Left	New Wire and Conduit
1190-C1				Dryer #1 FSS Left Burner Interface	6- #14	THWN/THHN	FSS #1 Right	FSS #1 Left	New Wire and Conduit
1190-C2	1-37	1-38		Dryer #1 FSS Right Burner Ignition	2- #14	THWN/THHN	Ignition Xmfr	FSS #1 Right	New Wire and Conduit
1190-P1	Blk	Wht	Grn	Dryer #1 FSS Right Burner Power	3- #14	THWN/THHN	120V Service Pnl	FSS #1 Right	New Wire and Conduit
1190-S1				Dryer #1 FSS Right Burner Flame Scanner	FWE		BE-1190	FSS #1 Right	New Wire and Conduit
1200-C1	1-11	1-12		Dryer #1 FSS Left Burner Permissive	2- #14	THWN/THHN	CP-100A	FSS #1 Left	New Wire and Conduit

REV NO	DESCRIPTION	APP'D	DATE

SEAL

AS-BUILT
Dawn T. Barry 1/25/02

SEAL

STATE OF TEXAS
JESSE M. CARR III
52288
REGISTERED
PROFESSIONAL ENGINEER
2-24-99

intellex CORPORATION
CONTROL SYSTEMS ENGINEERS
11230 WILCREST GREEN Houston, Texas 77042

CH2M HILL
7600 West Tidwell Road, Suite 400
Houston Tx 77040
713.462.0161

Binkley & Barfield, Inc.
Consulting Engineers
1710 Seamist Drive Houston, Texas 77008

ALMEDA SIMS
BIOSOLIDS
DRYER REHABILITATION

CIP NO 0298-05-3
FILE NO: 4289-4

INSTRUMENT CABLE SCHEDULE
SHEET 2

CITY OF HOUSTON
DEPARTMENT OF PUBLIC WORKS AND ENGINEERING
ENGINEERING, CONSTRUCTION AND REAL ESTATE GROUP

SECTION APPROVALS

WATER ENGINEERING

TRAFFIC AND SIGNAL ENGINEERING

Hamid Jousefi 2-25-99
WASTEWATER ENGINEERING

STREET & BRIDGE ENGINEERING

STORMWATER ENGINEERING

Anthony Quach 3/2/99
CONSTRUCTION

Zia Yazdani 2/25/99

OTHER DEPARTMENTS

PLANNING AND DEVELOPMENT

SPONSOR DEPARTMENT

CITY ENGINEER
3-2-99
DATE

DIRECTOR OF PUBLIC WORKS AND ENGINEERING
3/8/99
DATE

SUBMITTED:
SCALE: NONE
NONE
DATE:
SURVEY BY: N/A
F B NO:

DESIGNED BY: JMC
DRAWN BY: MBB
DWG. NO. : 141
SHT NO 57 of 159 SHTS

CITY DWG NO:
35001

ORIGINAL SCALE IN INCHES
FOR REDUCED PLANS
0 1 2 3

CADD DWG FILE NO : K:\BBI-AS\142.DWG
FILE DATE–OPERATOR:

INSTRUMENTATION CABLE SCHEDULE

CABLE NO.	WIRE 1	WIRE 2	WIRE 3	SERVICE	CABLE TYPE	CABLE SPEC	ORIGIN	DESTINATION	COMMENTS
1200–C2	1–11	1–12		Dryer #1 FSS Right Burner Permissive	2– #14	THWN/THHN	CP–100A	FSS #1 Right	New Wire and Conduit
1201–C1	Blk	Wht		Conveyor S–3 Start	2– #14	THWN/THHN	MCC	CP–100A	New Wire To MCC
1201–C2	Blk	Wht		Conveyor S–3 Stop	2– #14	THWN/THHN	MCC	CP–100A	New Wire To MCC
1201–C3				Conveyor S–3 Run Status	Existing		MCC	CP–100A	Existing – Re–route Conduit to CP–100A – Use existing Wire
1210–S1	Red	Blk	Shld	Dryer #1 Vapor Fan Damper Control	PR #16 Sh	Section 16126	CP–100B	CP–100A	Local In Panel
1211–E1	Red	Yel	Shld	Dryer #1 Vapor Fan Discharge Temperature	PR #18 KTX	Section 16127	TE–1211	CP–100A	Existing – Re–route Conduit to CP–100A – Pull New Wire
1212–E1	Red	Yel	Shld	Dryer #1 Vapor to Air Preheater Temperature	PR #18 KTX	Section 16127	TE–1212	CP–100A	Existing – Re–route Conduit to CP–100A – Pull New Wire
1213–S1	Red	Blk	Shld	Dryer #1 Induced Draft Fan Suction Pressure	PR #16 Sh	Section 16126	CP–100B	CP–100A	Local In Panel
1221–C1				Dryer #1 Induced Draft Fan Start	Existing		MCC	CP–100A	Existing – Re–route Conduit to CP–100A – Use existing Wire
1221–C2				Dryer #1 Induced Draft Fan Stop	Existing		MCC	CP–100A	Existing – Re–route Conduit to CP–100A – Use existing Wire
1221–C3				Dryer #1 Induced Draft Fan Run Status	Existing		MCC	CP–100A	Existing – Re–route Conduit to CP–100A – Use existing Wire
1223–S1	Red	Blk	Shld	Dryer #1 Induced Draft Fan Motor Current	PR #16 Sh	Section 16126	MCC	CP–100A	Existing – Re–route Conduit to CP–100A – Pull New Wire
1224–E1	Red	Yel	Shld	Dryer #1 Vapor Dust Collector Inlet Temperature	PR #18 KTX	Section 16127	TE–1224	CP–100A	New Conduit and Wire
1225–S1	Red	Blk	Shld	Dryer #1 Induced Draft Fan Damper Control	PR #16 Sh	Section 16126	CP–100B	CP–100A	Local In Panel
1226–C1	Blk	Wht		Dryer #1 Dust Collector Rotary Valve Start	2– #14	THWN/THHN	MCC	CP–100A	New wiring from CP–100A to MCC
1226–C2	Blk	Wht		Dryer #1 Dust Collector Rotary Valve Stop	2– #14	THWN/THHN	MCC	CP–100A	New wiring from CP–100A to MCC
1226–C3	Blk	Wht		Dryer #1 Dust Collector Rotary Valve Run Status	2– #14	THWN/THHN	MCC	CP–100A	New wiring from CP–100A to MCC
1231–C1				Dryer #1 Combustion Air Fan Start	Existing		MCC	CP–100A	Existing – Re–route Conduit to CP–100A – Use existing Wire
1231–C2				Dryer #1 Combustion Air Fan Stop	Existing		MCC	CP–100A	Existing – Re–route Conduit to CP–100A – Use existing Wire
1231–C3				Dryer #1 Combustion Air Fan Run Status	Existing		MCC	CP–100A	Existing – Re–route Conduit to CP–100A – Use existing Wire
1231–C4	1–15	1–16		Dryer #1 Combustion Air Fan Run Status	2– #14	THWN/THHN	MCC	FSS #1 Left	New Wire and Conduit to FSS From MCC
1231–C5	1–15	1–16		Dryer #1 Combustion Air Fan Run Status	2– #14	THWN/THHN	MCC	FSS #1 Right	New Wire and Conduit to FSS From MCC
1231–C6	1–35	1–36		Dryer #1 Combustion Air Fan Start	2– #14	THWN/THHN	MCC	FSS #1 Left	New Wire and Conduit to FSS From MCC
1231–C7	1–35	1–36		Dryer #1 Combustion Air Fan Start	2– #14	THWN/THHN	MCC	FSS #1 Right	New Wire and Conduit to FSS From MCC
1231–S1	Red	Blk	Shld	Dryer #1 Combustion Air Fan Discharge Pressure	PR #16 Sh	Section 16126	CP–100B	CP–100A	Local In Panel
1232–E1	Red	Yel		Dryer #1 Combustion Air Fan Discharge Temperature	PR #18 KTX	Section 16127	TE–1232	CP–100A	Use Existing Comduit and pull new thermocouple extension wire
1233–S1	Red	Blk	Shld	Dryer #1 Furnace Draft Pressure	PR #16 Sh	Section 16126	CP–100B	CP–100A	New
1234–C1				Dryer #1 Pre–Heater Protection Door Control	Existing		SV–1234	CP–100A	Existing – Re–route Conduit to CP–100A – Use existing Wire
1235–E1	Red	Yel	Shld	Dryer #1 Preheater Temperature	PR #18 KTX	Section 16127	TE–1235	CP–100A	Existing – Re–route Conduit to CP–100A – Pull New Wire
1236–E1	Red	Yel	Shld	Dryer #1 Preheater Temperature	PR #18 KTX	Section 16127	TE–1236	CP–100A	Existing – Re–route Conduit to CP–100A – Pull New Wire
1237–E1	Red	Yel	Shld	Dryer #1 Furnace Temperature	PR #18 KTX	Section 16127	TE–1237	CP–100A	Existing – Re–route Conduit to CP–100A – Pull New Wire
1238–E1	Red	Yel	Shld	Dryer #1 Furnace Temperature	PR #18 KTX	Section 16127	TE–1238	CP–100A	Existing – Re–route Conduit to CP–100A – Pull New Wire
1239–E1	Red	Yel	Shld	Dryer #1 Outlet Temperature	PR #18 KTX	Section 16127	TE–1239	CP–100A	Existing – Re–route Conduit to CP–100A – Pull New Wire
1240–E1	Red	Yel	Shld	Dryer #1 Outlet Temperature	PR #18 KTX	Section 16127	TE–1240	CP–100A	Existing – Re–route Conduit to CP–100A – Pull New Wire
1241–C1	Blk	Wht		Dryer #1 Soot Blower Start	2– #14	THWN/THHN	MCC	CP–100A	New Wire to MCC
1241–C2	Blk	Wht		Dryer #1 Soot Blower Stop	2– #14	THWN/THHN	MCC	CP–100A	New Wire to MCC
1241–C4	Blk	Wht		Dryer #1 Soot Blower Run Status	2– #14	THWN/THHN	MCC	CP–100A	New Wire to MCC
1300–S1	Red	Blk	Shld	Dryer #1 Furnace Firing Rate	PR #16 Sh	Section 16126	CP–100B	CP–100A	Local In Panel
1301–C1				Dryer #1 Cage Mill Start	Existing		MCC	CP–100A	Existing – Re–route Conduit to CP–100A – Use existing Wire
1301–C2				Dryer #1 Cage Mill Stop	Existing		MCC	CP–100A	Existing – Re–route Conduit to CP–100A – Use existing Wire
1301–C3				Dryer #1 Cage Mill Run Status	Existing		MCC	CP–100A	Existing – Re–route Conduit to CP–100A – Use existing Wire
1303–S1	Red	Blk	Shld	Dryer #1 Cage Mill Motor Current	PR #16 Sh	Section 16126	MCC	CP–100A	Existing – Re–route Conduit to CP–100A – Pull New Wire
1311–C1				Dryer #1 Cage Mill Mixer Start	Existing		MCC	CP–100A	Existing – Re–route Conduit to CP–100A – Use existing Wire
1311–C2				Dryer #1 Cage Mill Mixer Stop	Existing		MCC	CP–100A	Existing – Re–route Conduit to CP–100A – Use existing Wire
1311–C3				Dryer #1 Cage Mill Mixer Run Status	Existing		MCC	CP–100A	Existing – Re–route Conduit to CP–100A – Use existing Wire
1313–S1	Red	Blk	Shld	Dryer #1 Cage Mill Mixer Motor Current	PR #16 Sh	Section 16126	MCC	CP–100A	Existing – Re–route Conduit to CP–100A – Pull New Wire
1320–C1				Diverter Gate #1 for S3 – DC1 Control	Existing		SV–1320	CP–100A	Existing – Re–route Conduit to CP–100A – Use existing Wire
1320–C2				Diverter Gate #1 for S3 – DC1 Limit Switch	Existing		ZS–1320A	CP–100A	Existing – Re–route Conduit to CP–100A – Use existing Wire
1320–C3				Diverter Gate #1 for S3 – DC1 Limit Switch	Existing		ZS–1320B	CP–100A	Existing – Re–route Conduit to CP–100A – Use existing Wire
1321–C1				Conveyor S–1 Forward	Existing		MCC	CP–100A	Existing – Re–route Conduit to CP–100A – Use existing Wire
1321–C2				Conveyor S–1 Reverse	Existing		MCC	CP–100A	Existing – Re–route Conduit to CP–100A – Use existing Wire
1321–C3				Conveyor S–1 Stop	Existing		MCC	CP–100A	Existing – Re–route Conduit to CP–100A – Use existing Wire
1321–C4				Conveyor S–1 Run Status	Existing		MCC	CP–100A	Existing – Re–route Conduit to CP–100A – Use existing Wire
1331–E1	Red	Yel	Shld	Dryer #1 Cyclone Collector Discharge Temperature	PR #18 KTX	Section 16127	TE–1331	CP–100A	Existing – Re–route Conduit to CP–100A – Pull New Wire
1332–S1	Red	Blk	Shld	Dryer #1 Cyclone Collector Discharge Pressure	PR #16 Sh	Section 16126	CP–100B	CP–100A	Local in Panel
1333–E1	Red	Yel	Shld	Dryer #1 Cyclone Collector Vapor Temperature	PR #18 KTX	Section 16127	TE–1333	CP–100A	Existing – Re–route Conduit to CP–100A – Pull New Wire
1334–E1	Red	Yel	Shld	Dryer #1 Cyclone Collector Vapor Temperature	PR #18 KTX	Section 16127	TE–1334	CP–100A	Existing – Re–route Conduit to CP–100A – Pull New Wire
1335–C1				Dryer #1 Cyclone Collector Flap Valve Start	Existing		MCC	CP–100A	Existing – Re–route Conduit to CP–100A – Use existing Wire
1335–C2				Dryer #1 Cyclone Collector Flap Valve Stop	Existing		MCC	CP–100A	Existing – Re–route Conduit to CP–100A – Use existing Wire
1335–C3				Dryer #1 Cyclone Collector Flap Valve Run Status	Existing		MCC	CP–100A	Existing – Re–route Conduit to CP–100A – Use existing Wire
1341–C1	Blk	Wht		Dryer #1 Dry Divider–Conveyor Start	2– #14	THWN/THHN	MCC	CP–100A	New wiring from CP–100A to MCC
1341–C2	Blk	Wht		Dryer #1 Dry Divider–Conveyor Stop	2– #14	THWN/THHN	MCC	CP–100A	New wiring from CP–100A to MCC
1341–C3	Blk	Wht		Dryer #1 Dry Divider–Conveyor Run Status	2– #14	THWN/THHN	MCC	CP–100A	New wiring from CP–100A to MCC
1343–S1	Red	Blk	Shld	Dryer #1 Dry Divider–Conveyor Speed Transmitter	PR #16 Sh	Section 16126	ST–1343	CP–100A	Existing – Re–route Conduit to CP–100A – Pull New Wire
1343–S2	Red	Blk	Shld	Dryer #1 Dry Divider–Conveyor Speed Control	PR #16 Sh	Section 16126	CP–100B	CP–100A	Local in Panel
1351–C1				Dryer #1 Vapor Fan Start	Existing		MCC	CP–100A	Existing – Re–route Conduit to CP–100A – Use existing Wire
1351–C2				Dryer #1 Vapor Fan Stop	Existing		MCC	CP–100A	Existing – Re–route Conduit to CP–100A – Use existing Wire
1351–C3				Dryer #1 Vapor Fan Run Status	Existing		MCC	CP–100A	Existing – Re–route Conduit to CP–100A – Use existing Wire
1353–S1	Red	Blk	Shld	Dryer #1 Vapor Fan Motor Current	PR #16 Sh	Section 16126	MCC	CP–100A	Existing – Re–route Conduit to CP–100A – Pull New Wire
1361–C1	Blk	Wht		"Conveyor ""E"" Start"	2– #14	THWN/THHN	MCC	CP–100A	New wiring from CP–100A to MCC
1361–C2	Blk	Wht		"Conveyor ""E"" Stop"	2– #14	THWN/THHN	MCC	CP–100A	New wiring from CP–100A to MCC
1361–C3				"Conveyor ""E"" Run Status"	Existing		MCC	CP–100A	Existing – Re–route Conduit to CP–100A – Use existing Wire
1371–C1	Blk	Wht		"Conveyor ""A"" Start"	2– #14	THWN/THHN	MCC	CP–100A	New wiring from CP–100A to MCC
1371–C2	Blk	Wht		"Conveyor ""A"" Stop"	2– #14	THWN/THHN	MCC	CP–100A	New wiring from CP–100A to MCC
1371–C3				"Conveyor ""A"" Run Status"	Existing		MCC	CP–100A	Existing – Re–route Conduit to CP–100A – Use existing Wire
1400–C1				Water Spray Pump No. 1 Start	Existing		MCC	CP–100A	Existing – Re–route Conduit to CP–100A – Use existing Wire
1400–C2				Water Spray Pump No. 1 Stop	Existing		MCC	CP–100A	Existing – Re–route Conduit to CP–100A – Use existing Wire

REV NO	DESCRIPTION	APP'D	DATE

SEAL

AS-BUILT
Darrel ... 1/25/02

SEAL
STATE OF TEXAS
JESSE M. CARR III
52288
REGISTERED PROFESSIONAL ENGINEER
2-26-99

intellex CORPORATION
CONTROL SYSTEMS ENGINEERS
11230 WILCREST GREEN Houston, Texas 77042

CH2M HILL
7600 West Tidwell Road, Suite 400
Houston Tx 77040
713.462.0161

Binkley & Barfield, Inc.
Consulting Engineers
1710 Seamist Drive Houston, Texas 77008

ALMEDA SIMS
BIOSOLIDS
DRYER REHABILITATION

CIP NO 0298-05-3
FILE NO: 4289-4

INSTRUMENT CABLE SCHEDULE
SHEET 3

CITY OF HOUSTON
DEPARTMENT OF PUBLIC WORKS AND ENGINEERING
ENGINEERING, CONSTRUCTION AND REAL ESTATE GROUP

SECTION APPROVALS

WATER ENGINEERING — TRAFFIC AND SIGNAL ENGINEERING
WASTEWATER ENGINEERING (signed 2-25-99) — STREET & BRIDGE ENGINEERING
STORMWATER ENGINEERING — CONSTRUCTION (signed 3/1/99)
(signed 2/25/99)

OTHER DEPARTMENTS

PLANNING AND DEVELOPMENT — SPONSOR DEPARTMENT

CITY ENGINEER — DATE 3-2-99
DIRECTOR OF PUBLIC WORKS AND ENGINEERING — DATE 3/3/99

SUBMITTED:
SCALE: NONE
NONE
DATE:
SURVEY BY: N/A
F B NO:

DESIGNED BY: JMC
DRAWN BY: MBB
DWG. NO. : 142
SHT NO 58 of 159 SHTS
CITY DWG NO:
35001

ORIGINAL SCALE IN INCHES FOR REDUCED PLANS
0 1 2 3

CADD DWG FILE NO : K:\BBI-AS\43.DWG
FILE DATE-OPERATOR:

INSTRUMENTATION CABLE SCHEDULE

CABLE NO.	WIRE 1	WIRE 2	WIRE 3	SERVICE	CABLE TYPE	CABLE SPEC	ORIGIN	DESTINATION	COMMENTS
1400-C3				Water Spray Pump No. 1 Run Status	Existing		MCC	CP-100A	Existing – Re-route Conduit to CP-100A – Use existing Wire
2000-C1	Blk	Wht		Dryer #2 Emergency Stop	2- #14		HS-2000A	CP-100A	Local in Panel
2101-C1	2-12	2-13		Dryer #2 FSS Low Fire Air Solenoid Valve	2- #14	THWN/THHN	SV-2101	CA CTRL JB	New Wire and Conduit
2101-C2	1-51	1-52		Dryer #2 FSS Low Fire Air Solenoid Valve Relay	2- #14	THWN/THHN	CA CTRL JB	FSS #2 Left	New Wire and Conduit
2101-C3	1-51	1-52		Dryer #2 FSS Low Fire Air Solenoid Valve Relay	2- #14	THWN/THHN	CA CTRL JB	FSS #2 Right	New Wire and Conduit
2101-C4	1-19	1-20		Dryer #2 FSS Low Fire Air Limit Switch	2- #14	THWN/THHN	ZS-2101	FSS #2 Left	New Wire and Conduit
2101-C5	1-19	1-20		Dryer #2 FSS Low Fire Air Limit Switch	2- #14	THWN/THHN	ZS-2101	FSS #2 Right	New Wire and Conduit
2102-C1	2-26	2-27		Dryer #2 FSS Purge Air Solenoid Valve	2- #14	THWN/THHN	SV-2102	CA CTRL JB	New Wire and Conduit
2102-C2	1-55A	1-55B		Dryer #2 FSS Purge Air Solenoid Valve Relay	2- #14	THWN/THHN	CA CTRL JB	FSS #2 Left	New Wire and Conduit
2102-C3	1-55A	1-55B		Dryer #2 FSS Purge Air Solenoid Valve Relay	2- #14	THWN/THHN	CA CTRL JB	FSS #2 Right	New Wire and Conduit
2102-C4	1-23	1-24		Dryer #2 FSS Purge Limit Switch	2- #14	THWN/THHN	ZS-2102	FSS #2 Left	New Wire and Conduit
2102-C5	1-23	1-24		Dryer #2 FSS Purge Limit Switch	2- #14	THWN/THHN	ZS-2102	FSS #2 Right	New Wire and Conduit
2104-C1	1-25	1-26		Dryer #2 FSS Low Air Differential Pressure	2- #14	THWN/THHN	PDSL-2104	FSS #2 Left	New Wire and Conduit
2104-C2	1-25	1-26		Dryer #2 FSS Low Air Differential Pressure	2- #14	THWN/THHN	PDSL-2104	FSS #2 Right	New Wire and Conduit
2105-C1	1-17	1-18		Dryer #2 FSS Combustion Air Low Flow	2- #14	THWN/THHN	FSL-2105	FSS #2 Left	New Wire and Conduit
2105-C2	1-17	1-18		Dryer #2 FSS Combustion Air Low Flow	2- #14	THWN/THHN	FSL-2105	FSS #2 Right	New Wire and Conduit
2110-C1	1-3	1-4		Dryer #2 FSS Instrument Air Low Pressure	2- #14	THWN/THHN	PSL-2110	FSS #2 Left	New Wire and Conduit
2110-C2	1-3	1-4		Dryer #2 FSS Instrument Air Low Pressure	2- #14	THWN/THHN	PSL-2110	FSS #2 Right	New Wire and Conduit
2122-C1	1-9	1-10		Dryer #2 FSS Low Gas Pressure	2- #14	THWN/THHN	PSL-2122	FSS #2 Left	New Wire and Conduit
2122-C2	1-9	1-10		Dryer #2 FSS Low Gas Pressure	2- #14	THWN/THHN	PSL-2122	FSS #2 Right	New Wire and Conduit
2123-C1	1-7	1-8		Dryer #2 FSS High Gas Pressure	2- #14	THWN/THHN	PSH-2123	FSS #2 Left	New Wire and Conduit
2123-C2	1-7	1-8		Dryer #2 FSS High Gas Pressure	2- #14	THWN/THHN	PSH-2123	FSS #2 Right	New Wire and Conduit
2141-C1	1-47	1-48		Dryer #2 FSS Gas Valve 1 Left Burner	2- #14	THWN/THHN	SSV-2141	FSS #2 Left	New Wire and Conduit
2141-C2	1-29	1-30		Dryer #2 FSS Gas Valve 1 Limit Switch Left Burner	2- #14	THWN/THHN	ZS-2141	FSS #2 Left	New Wire and Conduit
2142-C1	1-45	1-46		Dryer #2 FSS Gas Valve 2 Left Burner	2- #14	THWN/THHN	SSV-2142	FSS #2 Left	New Wire and Conduit
2142-C2	1-27	1-28		Dryer #2 FSS Gas Valve 2 Limit Switch Left Burner	2- #14	THWN/THHN	ZS-2142	FSS #2 Left	New Wire and Conduit
2143-C1	1-49	1-50		Dryer #2 FSS Gas Vent Valve Left Burner	2- #14	THWN/THHN	SSV-2143	FSS #2 Left	New Wire and Conduit
2144-C1	1-31A	1-31B		Dryer #2 FSS Gas Cock Limit Switch Left Burner	2- #14	THWN/THHN	ZS-2144	FSS #2 Left	New Wire and Conduit
2146-C1	1-21	1-22		Dryer #2 FSS Low Fire Gas Valve 1 Limit Switch Left Burner	2- #14	THWN/THHN	ZS-2146	FSS #2 Left	New Wire and Conduit
2147-C1	1-53	1-54		Dryer #2 FSS Low Fire Gas Solenoid Valve Left Burner	2- #14	THWN/THHN	SV-2147	FSS #2 Left	New Wire and Conduit
2151-C1	1-41	1-42		Dryer #2 FSS Pilot Gas Valve 1 Left Burner	2- #14	THWN/THHN	SSV-2151	FSS #2 Left	New Wire and Conduit
2152-C1	1-39	1-40		Dryer #2 FSS Pilot Gas Valve 2 Left Burner	2- #14	THWN/THHN	SSV-2152	FSS #2 Left	New Wire and Conduit
2153-C1	1-43	1-44		Dryer #2 FSS Pilot Gas Vent Valve Left Burner	2- #14	THWN/THHN	SSV-2153	FSS #2 Left	New Wire and Conduit
2161-C1	1-47	1-48		Dryer #2 FSS Gas Valve 1 Right Burner	2- #14	THWN/THHN	SSV-2161	FSS #2 Right	New Wire and Conduit
2161-C2	1-29	1-30		Dryer #2 FSS Gas Valve 1 Limit Switch Right Burner	2- #14	THWN/THHN	ZS-2161	FSS #2 Right	New Wire and Conduit
2162-C1	1-45	1-46		Dryer #2 FSS Gas Valve 2 Right Burner	2- #14	THWN/THHN	SSV-2162	FSS #2 Right	New Wire and Conduit
2162-C2	1-27	1-28		Dryer #2 FSS Gas Valve 2 Limit Switch Right Burner	2- #14	THWN/THHN	ZS-2162	FSS #2 Right	New Wire and Conduit
2163-C1	1-49	1-50		Dryer #2 FSS Gas Vent Valve Right Burner	2- #14	THWN/THHN	SSV-2163	FSS #2 Right	New Wire and Conduit
2164-C1	1-31A	1-31B		Dryer #2 FSS Gas Cock Limit Switch Right Burner	2- #14	THWN/THHN	ZS-2164	FSS #2 Right	New Wire and Conduit
2166-C1	1-22A	1-22B		Dryer #2 FSS Low Fire Gas Valve 2 Limit Switch Right Burner	2- #14	THWN/THHN	ZS-2166	FSS #2 Right	New Wire and Conduit
2167-C1	1-53	1-54		Dryer #2 FSS Low Fire Gas Solenoid Valve Right Burner	2- #14	THWN/THHN	SV-2147	FSS #2 Right	New Wire and Conduit
2171-C1	1-41	1-42		Dryer #2 FSS Pilot Gas Valve 1 Right Burner	2- #14	THWN/THHN	SSV-2171	FSS #2 Right	New Wire and Conduit
2172-C1	1-39	1-40		Dryer #2 FSS Pilot Gas Valve 2 Right Burner	2- #14	THWN/THHN	SSV-2172	FSS #2 Right	New Wire and Conduit
2173-C1	1-43	1-44		Dryer #2 FSS Pilot Gas Vent Valve Right Burner	2- #14	THWN/THHN	SSV-2173	FSS #2 Right	New Wire and Conduit
2180-C1				Dryer #2 FSS Right Burner Interface	6- #14	THWN/THHN	FSS #2 Left	FSS #2 Right	New Wire and Conduit
2180-C2	1-37	1-38		Dryer #2 FSS Left Burner Ignition	2- #14	THWN/THHN	Ignition Xmfr	FSS #2 Left	New Wire and Conduit
2180-P1	Blk	Wht	Grn	Dryer #2 FSS Left Burner Power	3- #14	THWN/THHN	120V Service Pnl	FSS #2 Left	New Wire and Conduit
2180-S1				Dryer #2 FSS Left Burner Flame Scanner	FWE		BE-2180	FSS #2 Left	New Wire and Conduit
2190-C1				Dryer #2 FSS Left Burner Interface	6- #14	THWN/THHN	FSS #2 Right	FSS #2 Left	New Wire and Conduit
2190-C2	1-37	1-38		Dryer #2 FSS Right Burner Ignition	2- #14	THWN/THHN	Ignition Xmfr	FSS #2 Right	New Wire and Conduit
2190-P1	Blk	Wht	Grn	Dryer #2 FSS Right Burner Power	3- #14	THWN/THHN	120V Service Pnl	FSS #2 Right	New Wire and Conduit
2190-S1				Dryer #2 FSS Right Burner Flame Scanner	FWE		BE-2190	FSS #2 Right	New Wire and Conduit
2200-C1	1-11	1-12		Dryer #2 FSS Left Burner Permissive	2- #14	THWN/THHN	CP-100A	FSS #2 Left	New Wire and Conduit
2200-C2	1-11	1-12		Dryer #2 FSS Right Burner Permissive	2- #14	THWN/THHN	CP-100A	FSS #2 Right	New Wire and Conduit
2210-S1	Red	Blk	Shld	Dryer #2 Vapor Fan Damper Control	PR #16 Sh	Section 16126	CP-100C	CP-100A	Local In Panel
2211-E1	Red	Yel	Shld	Dryer #2 Vapor Fan Discharge Temperature	PR #18 KTX	Section 16127	TE-2211	CP-100A	Existing – Re-route Conduit to CP-100A – Pull New Wire
2212-E1	Red	Yel	Shld	Dryer #2 Vapor to Air Preheater Temperature	PR #18 KTX	Section 16127	TE-2212	CP-100A	Existing – Re-route Conduit to CP-100A – Pull New Wire
2213-S1	Red	Blk	Shld	Dryer #2 Induced Draft Fan Suction Pressure	PR #16 Sh	Section 16126	CP-100C	CP-100A	Local In Panel
2221-C1				Dryer #2 Induced Draft Fan Start	Existing		MCC	CP-100A	Existing – Re-route Conduit to CP-100A – Use existing Wire
2221-C2				Dryer #2 Induced Draft Fan Stop	Existing		MCC	CP-100A	Existing – Re-route Conduit to CP-100A – Use existing Wire
2221-C3				Dryer #2 Induced Draft Fan Run Status	Existing		MCC	CP-100A	Existing – Re-route Conduit to CP-100A – Use existing Wire
2223-S1	Red	Blk	Shld	Dryer #2 Induced Draft Fan Motor Current	PR #16 Sh		MCC	CP-100A	Existing – Re-route Conduit to CP-100A – Pull New Wire
2224-E1	Red	Yel	Shld	Dryer #2 Vapor Dust Collector Inlet Temperature	PR #18 KTX	Section 16127	TE-2224	CP-100A	New Conduit and Wire
2225-S1	Red	Blk	Shld	Dryer #2 Induced Draft Fan Damper Control	PR #16 Sh	Section 16126	CP-100C	CP-100A	Local In Panel
2226-C1	Blk	Wht		Dryer #2 Dust Collector Rotary Valve Start	2- #14	THWN/THHN	MCC	CP-100A	New wiring from CP-100A to MCC
2226-C2	Blk	Wht		Dryer #2 Dust Collector Rotary Valve Stop	2- #14	THWN/THHN	MCC	CP-100A	New wiring from CP-100A to MCC
2226-C3	Blk	Wht		Dryer #2 Dust Collector Rotary Valve Run Status	2- #14	THWN/THHN	MCC	CP-100A	New wiring from CP-100A to MCC
2231-C1				Dryer #2 Combustion Air Fan Start	Existing		MCC	CP-100A	Existing – Re-route Conduit to CP-100A – Use existing Wire
2231-C2				Dryer #2 Combustion Air Fan Stop	Existing		MCC	CP-100A	Existing – Re-route Conduit to CP-100A – Use existing Wire
2231-C3				Dryer #2 Combustion Air Fan Run Status	Existing		MCC	CP-100A	Existing – Re-route Conduit to CP-100A – Use existing Wire
2231-C4	1-15	1-16		Dryer #2 Combustion Air Fan Run Status	2- #14	THWN/THHN	MCC	FSS #2 Left	New Wire and Conduit to FSS From MCC
2231-C5	1-15	1-16		Dryer #2 Combustion Air Fan Run Status	2- #14	THWN/THHN	MCC	FSS #2 Right	New Wire and Conduit to FSS From MCC
2231-C6	1-35	1-36		Dryer #2 Combustion Air Fan Start	2- #14	THWN/THHN	MCC	FSS #2 Left	New Wire and Conduit to FSS From MCC
2231-C7	1-35	1-36		Dryer #2 Combustion Air Fan Start	2- #14	THWN/THHN	MCC	FSS #2 Right	New Wire and Conduit to FSS From MCC
2231-S1	Red	Blk	Shld	Dryer #2 Combustion Air Fan Discharge Pressure	PR #16 Sh	Section 16126	CP-100C	CP-100A	Local In Panel
2232-E1	Red	Yel		Dryer #2 Combustion Air Fan Discharge Temperature	PR #18 KTX	Section 16127	TE-2232	CP-100A	Use Existing Comduit and pull new thermocouple extension wire
2233-S1	Red	Blk	Shld	Dryer #2 Furnace Draft Pressure	PR #16 Sh	Section 16126	CP-100C	CP-100A	New

REV NO	DESCRIPTION	APP'D	DATE

SEAL
AS-BUILT
Darrell Bass 1/25/02

SEAL
STATE OF TEXAS
JESSE M. CARR III
52288
REGISTERED PROFESSIONAL ENGINEER
2-26-99

intellex CORPORATION
CONTROL SYSTEMS ENGINEERS
11230 WILCREST GREEN Houston, Texas 77042

CH2M HILL
7600 West Tidwell Road, Suite 400
Houston Tx 77040
713.462.0161

Binkley & Barfield, Inc.
Consulting Engineers
1710 Seamist Drive Houston, Texas 77008

ALMEDA SIMS
BIOSOLIDS
DRYER REHABILITATION

CIP NO 0298-05-3
FILE NO: 4289-4

INSTRUMENT CABLE SCHEDULE
SHEET 4

CITY OF HOUSTON
DEPARTMENT OF PUBLIC WORKS AND ENGINEERING
ENGINEERING, CONSTRUCTION AND REAL ESTATE GROUP

SECTION APPROVALS

WATER ENGINEERING
TRAFFIC AND SIGNAL ENGINEERING
WASTEWATER ENGINEERING 2-25-99
STREET & BRIDGE ENGINEERING
STORMWATER ENGINEERING
CONSTRUCTION 3/2/99
2/25/99

OTHER DEPARTMENTS

PLANNING AND DEVELOPMENT
SPONSOR DEPARTMENT

CITY ENGINEER DATE 3-2-99
DIRECTOR OF PUBLIC WORKS AND ENGINEERING DATE 3/5/99

SUBMITTED:
SCALE: NONE
NONE
DATE:
SURVEY BY: N/A
F B NO:

DESIGNED BY: JMC
DRAWN BY: MBB
DWG. NO. : 143
SHT NO 59 of 159 SHTS

CITY DWG NO:
35001

ORIGINAL SCALE IN INCHES FOR REDUCED PLANS
0 1 2 3

CADD DWG FILE NO : K:\BBI-AS\V44.DWG
FILE DATE-OPERATOR:

INSTRUMENTATION CABLE SCHEDULE

CABLE NO.	WIRE 1	WIRE 2	WIRE 3	SERVICE	CABLE TYPE	CABLE SPEC	ORIGIN	DESTINATION	COMMENTS
2234-C1				Dryer #2 Pre-Heater Protection Door Control	Existing		SV-2234	CP-100A	Existing - Re-route Conduit to CP-100A - Use existing Wire
2235-E1	Red	Yel	Shld	Dryer #2 Preheater Temperature	PR #18 KTX	Section 16127	TE-2235	CP-100A	Existing - Re-route Conduit to CP-100A - Pull New Wire
2236-E1	Red	Yel	Shld	Dryer #2 Preheater Temperature	PR #18 KTX	Section 16127	TE-2236	CP-100A	Existing - Re-route Conduit to CP-100A - Pull New Wire
2237-E1	Red	Yel	Shld	Dryer #2 Furnace Temperature	PR #18 KTX	Section 16127	TE-2237	CP-100A	Existing - Re-route Conduit to CP-100A - Pull New Wire
2238-E1	Red	Yel	Shld	Dryer #2 Furnace Temperature	PR #18 KTX	Section 16127	TE-2238	CP-100A	Existing - Re-route Conduit to CP-100A - Pull New Wire
2239-E1	Red	Yel	Shld	Dryer #2 Outlet Temperature	PR #18 KTX	Section 16127	TE-2239	CP-100A	Existing - Re-route Conduit to CP-100A - Pull New Wire
2240-E1	Red	Yel	Shld	Dryer #2 Outlet Temperature	PR #18 KTX	Section 16127	TE-2240	CP-100A	Existing - Re-route Conduit to CP-100A - Pull New Wire
2241-C1	Blk	Wht		Dryer #2 Soot Blower Start	2- #14	THWN/THHN	MCC	CP-100A	New Wire to MCC
2241-C2	Blk	Wht		Dryer #2 Soot Blower Stop	2- #14	THWN/THHN	MCC	CP-100A	New Wire to MCC
2241-C4	Blk	Wht		Dryer #2 Soot Blower Run Status	2- #14	THWN/THHN	MCC	CP-100A	New Wire to MCC
2300-S1	Red	Blk	Shld	Dryer #2 Furnace Firing Rate	PR #16 Sh	Section 16126	CP-100C	CP-100A	Local In Panel
2301-C1				Dryer #2 Cage Mill Start	Existing		MCC	CP-100A	Existing - Re-route Conduit to CP-100A - Use existing Wire
2301-C2				Dryer #2 Cage Mill Stop	Existing		MCC	CP-100A	Existing - Re-route Conduit to CP-100A - Use existing Wire
2301-C3				Dryer #2 Cage Mill Run Status	Existing		MCC	CP-100A	Existing - Re-route Conduit to CP-100A - Use existing Wire
2303-S1	Red	Blk	Shld	Dryer #2 Cage Mill Motor Current	PR #16 Sh	Section 16126	MCC	CP-100A	Existing - Re-route Conduit to CP-100A - Pull New Wire
2311-C1				Dryer #2 Cage Mill Mixer Start	Existing		MCC	CP-100A	Existing - Re-route Conduit to CP-100A - Use existing Wire
2311-C2				Dryer #2 Cage Mill Mixer Stop	Existing		MCC	CP-100A	Existing - Re-route Conduit to CP-100A - Use existing Wire
2311-C3				Dryer #2 Cage Mill Mixer Run Status	Existing		MCC	CP-100A	Existing - Re-route Conduit to CP-100A - Use existing Wire
2313-S1	Red	Blk	Shld	Dryer #2 Cage Mill Mixer Motor Current	PR #16 Sh	Section 16126	MCC	CP-100A	Existing - Re-route Conduit to CP-100A - Pull New Wire
2320-C1				Diverter Gate #2 for S3 - DC1 Control	Existing		SV-2320	CP-100A	Existing - Re-route Conduit to CP-100A - Use existing Wire
2320-C2				Diverter Gate #2 for S3 - DC1 Limit Switch	Existing		ZS-2320A	CP-100A	Existing - Re-route Conduit to CP-100A - Use existing Wire
2320-C3				Diverter Gate #2 for S3 - DC1 Limit Switch	Existing		ZS-2320B	CP-100A	Existing - Re-route Conduit to CP-100A - Use existing Wire
2321-C1				Conveyor S-2 Forward	Existing		MCC	CP-100A	Existing - Re-route Conduit to CP-100A - Use existing Wire
2321-C2				Conveyor S-2 Reverse	Existing		MCC	CP-100A	Existing - Re-route Conduit to CP-100A - Use existing Wire
2321-C3				Conveyor S-2 Stop	Existing		MCC	CP-100A	Existing - Re-route Conduit to CP-100A - Use existing Wire
2321-C4				Conveyor S-2 Run Status	Existing		MCC	CP-100A	Existing - Re-route Conduit to CP-100A - Use existing Wire
2331-E1	Red	Yel	Shld	Dryer #2 Cyclone Collector Discharge Temperature	PR #18 KTX	Section 16127	TE-2331	CP-100A	Existing - Re-route Conduit to CP-100A - Pull New Wire
2332-S1	Red	Blk	Shld	Dryer #2 Cyclone Collector Discharge Pressure	PR #16 Sh	Section 16126	CP-100C	CP-100A	Local in Panel
2333-E1	Red	Yel	Shld	Dryer #2 Cyclone Collector Vapor Temperature	PR #18 KTX	Section 16127	TE-2333	CP-100A	Existing - Re-route Conduit to CP-100A - Pull New Wire
2334-E1	Red	Yel	Shld	Dryer #2 Cyclone Collector Vapor Temperature	PR #18 KTX	Section 16127	TE-2334	CP-100A	Existing - Re-route Conduit to CP-100A - Pull New Wire
2335-C1				Dryer #2 Cyclone Collector Flap Valve Start	Existing		MCC	CP-100A	Existing - Re-route Conduit to CP-100A - Use existing Wire
2335-C2				Dryer #2 Cyclone Collector Flap Valve Stop	Existing		MCC	CP-100A	Existing - Re-route Conduit to CP-100A - Use existing Wire
2335-C3				Dryer #2 Cyclone Collector Flap Valve Run Status	Existing		MCC	CP-100A	Existing - Re-route Conduit to CP-100A - Use existing Wire
2341-C1	Blk	Wht		Dryer #2 Dry Divider-Conveyor Start	2- #14	THWN/THHN	MCC	CP-100A	New wiring from CP-100A to MCC
2341-C2	Blk	Wht		Dryer #2 Dry Divider-Conveyor Stop	2- #14	THWN/THHN	MCC	CP-100A	New wiring from CP-100A to MCC
2341-C3	Blk	Wht		Dryer #2 Dry Divider-Conveyor Run Status	2- #14	THWN/THHN	MCC	CP-100A	New wiring from CP-100A to MCC
2343-S1	Red	Blk	Shld	Dryer #2 Dry Divider-Conveyor Speed Transmitter	PR #16 Sh	Section 16126	ST-2343	CP-100A	Existing - Re-route Conduit to CP-100A - Pull New Wire
2343-S2	Red	Blk	Shld	Dryer #2 Dry Divider-Conveyor Speed Control	PR #16 Sh	Section 16126	CP-100C	CP-100A	Local in Panel
2351-C1				Dryer #2 Vapor Fan Start	Existing		MCC	CP-100A	Existing - Re-route Conduit to CP-100A - Use existing Wire
2351-C2				Dryer #2 Vapor Fan Stop	Existing		MCC	CP-100A	Existing - Re-route Conduit to CP-100A - Use existing Wire
2351-C3				Dryer #2 Vapor Fan Run Status	Existing		MCC	CP-100A	Existing - Re-route Conduit to CP-100A - Use existing Wire
2353-S1	Red	Blk	Shld	Dryer #2 Vapor Fan Motor Current	PR #16 Sh	Section 16126	MCC	CP-100A	Existing - Re-route Conduit to CP-100A - Pull New Wire
2361-C1	Blk	Wht		"Conveyor ""F"" Start"	2- #14	THWN/THHN	MCC	CP-100A	New wiring from CP-100A to MCC
2361-C2	Blk	Wht		"Conveyor ""F"" Stop"	2- #14	THWN/THHN	MCC	CP-100A	New wiring from CP-100A to MCC
2361-C3				"Conveyor ""F"" Run Status"	Existing		MCC	CP-100A	Existing - Re-route Conduit to CP-100A - Use existing Wire
2371-C1	Blk	Wht		"Conveyor ""D"" Start"	2- #14	THWN/THHN	MCC	CP-100A	New wiring from CP-100A to MCC
2371-C2	Blk	Wht		"Conveyor ""D"" Stop"	2- #14	THWN/THHN	MCC	CP-100A	New wiring from CP-100A to MCC
2371-C3				"Conveyor ""D"" Run Status"	Existing		MCC	CP-100A	Existing - Re-route Conduit to CP-100A - Use existing Wire
2400-C1				Water Spray Pump No. 2 Start	Existing		MCC	CP-100A	Existing - Re-route Conduit to CP-100A - Use existing Wire
2400-C2				Water Spray Pump No. 2 Stop	Existing		MCC	CP-100A	Existing - Re-route Conduit to CP-100A - Use existing Wire
2400-C3				Water Spray Pump No. 2 Run Status	Existing		MCC	CP-100A	Existing - Re-route Conduit to CP-100A - Use existing Wire

REV NO	DESCRIPTION	APP'D	DATE

SEAL

AS-BUILT
Darrell Ross 1/25/02

SEAL

STATE OF TEXAS
JESSE M. CARR III
52288
REGISTERED PROFESSIONAL ENGINEER
2-24-99

intellex CORPORATION
CONTROL SYSTEMS ENGINEERS
11230 WILCREST GREEN Houston, Texas 77042

CH2M HILL
7600 West Tidwell Road, Suite 400
Houston Tx 77040
713.462.0161

Binkley & Barfield, Inc.
Consulting Engineers
1710 Seamist Drive Houston, Texas 77008

ALMEDA SIMS
BIOSOLIDS
DRYER REHABILITATION

CIP NO 0298-05-3
FILE NO: 4289-4

INSTRUMENT CABLE SCHEDULE
SHEET 5

CITY OF HOUSTON

DEPARTMENT OF PUBLIC WORKS AND ENGINEERING
ENGINEERING, CONSTRUCTION AND REAL ESTATE GROUP

SECTION APPROVALS

WATER ENGINEERING

TRAFFIC AND SIGNAL ENGINEERING

Hamid Jamshidi 2-25-99
WASTEWATER ENGINEERING

STREET & BRIDGE ENGINEERING

STORMWATER ENGINEERING

Rodney Allen 3/2/99
CONSTRUCTION

Zia Hosseinzadeh 2/25/99

OTHER DEPARTMENTS

PLANNING AND DEVELOPMENT

SPONSOR DEPARTMENT

Herbert Lum 3-2-99
CITY ENGINEER DATE

DIRECTOR OF PUBLIC WORKS AND ENGINEERING 3/5/99 DATE

SUBMITTED:
SCALE: NONE
NONE
DATE:
SURVEY BY: N/A
F B NO:

DESIGNED BY: JMC
DRAWN BY: MBB
DWG. NO. : 144
SHT NO 60 of 159 SHTS

CITY DWG NO:
35001

ORIGINAL SCALE IN INCHES
FOR REDUCED PLANS
0 1 2 3

CADD DWG FILE NO : K:\E BBI-AS\E145.DWG
FILE DATE--OPERATOR:

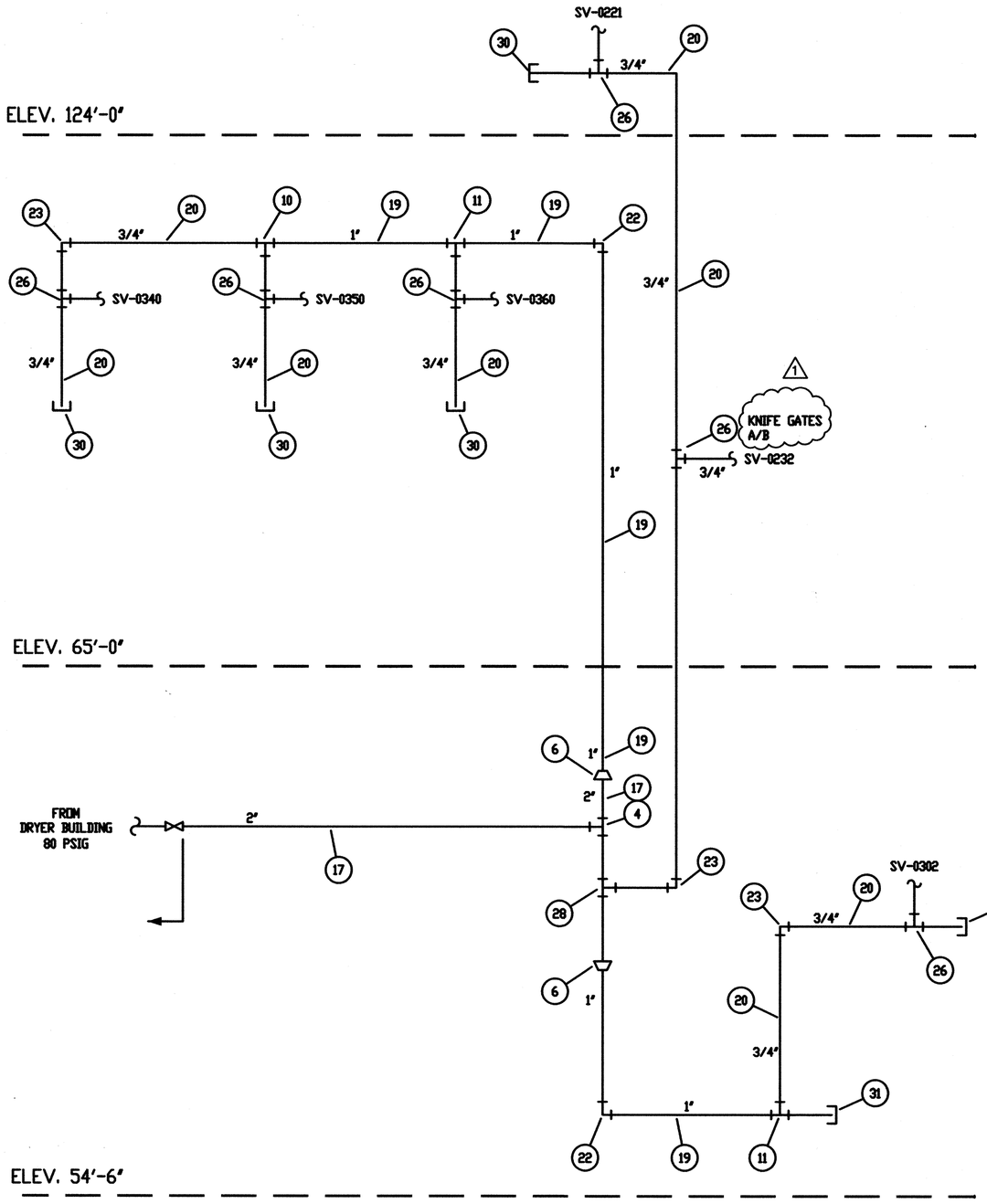

ORIGINAL SCALE IN INCHES FOR REDUCED PLANS
0 1 2 3

BILL OF MATERIAL

MARK	QUANTITY	MATERIAL	DESCRIPTION
1	0		PRESSURE REDUCING VALVE
2	0		PRESSURE GAUGE, 4-1/2" 0-160 PSIG
3	0		PRESSURE RELIEF VALVE
4	1	COPPER	2" TEE
5	6		1/2" GLOBE VALVE THREADED
6	2	COPPER	2"x1" REDUCER
7	0	COPPER	2"x1-1/2" REDUCER
8	0	COPPER	2"x2"x1" TEE
9	0	COPPER	2"x3/4" REDUCER
10	1	COPPER	1"x3/4"x3/4" TEE
11	2	COPPER	1"x1"x3/4" TEE
12	12		1/2" THREADED ADAPTOR
13	0		2" THREAED ADAPTOR
14	0	COPPER	1" TEE
15	0		1" VALVE
16	AR	COPPER	1/2" TUBING
17	AR	COPPER	2" TUBING
18	0	COPPER	1-1/2" TUBING
19	AR	COPPER	1" TUBING
20	AR	COPPER	3/4" TUBING
21	AR	COPPER	2" ELL
22	2	COPPER	1" ELL
23	2	COPPER	3/4" ELL
24	12	COPPER	1/2" ELL
25	0	COPPER	3/4"x1/2" REDUCING ELL
26	6	COPPER	3/4"x3/4"x1/2" TEE
27	0	COPPER	1"x1"x1/2" TEE
28	1	COPPER	2"x2"x3/4" TEE
29	0	COPPER	1-1/2" PIPE CAP
30	5	COPPER	3/4" PIPE CAP
31	1	COPPER	1" PIPE CAP
32	0	COPPER	2"x2"x1/2" TEE
33	0	COPPER	1-1/2" X 1-1/2" X 3/4" TEE
34	0	COPPER	3/4" VALVE

NOTES:

1. AIR CAPACITY OF 1/4" FISHER 67AFR REGULATOR WITH 40 PSIG INLET PRESSURE, SET PRESSURE OF 20 PSIG WITH 10% DROOP IS APPROXIMATELY 360 SCFH.
2. AIR CAPACITY OF 1/2" FISHER 95H REGULATOR WITH 60 PSIG INLET PRESSURE, SET PRESSURE OF 40 PSIG WITH 10% DROOP IS APPROXIMATELY 1600 SCFH.
3. PRESSURE RELIEF VALVE IS SIZED TO MAINTAIN SET PRESSURE OF 45 PSIG WITH NO OVERPRESSURE BASED UPON THE FAILURE OF THE 1/2" REGULATOR HAVING A Cg VALUE OF 67. MAXIMUM RELIEF FLOW RATE WILL BE 5025 SCFH.
4. ALL MATERIAL QUANTITIES ARE ESTIMATED. CONTRACTOR SHALL BE RESPONSIBLE TO SUPPLY ACTUAL QUANTITY REQUIRED.
5. AIR DESIGN FOR AN I/P TRANSDUCER AND POSITIONER IS APPROXIMATELY 30 SCFH.

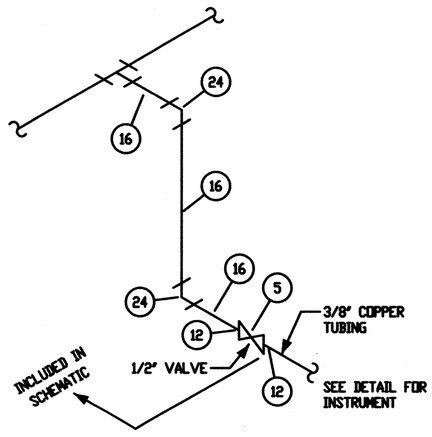

TYPE "A" AIR SUPPLY

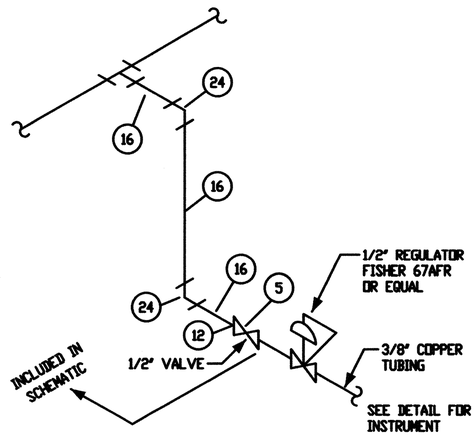

TYPE "B" AIR SUPPLY

REV NO	DESCRIPTION	APP'D	DATE
1	AS BUILT DRAWING	DJR	12/01

SEAL

STATE OF TEXAS
DAVID J. ROSS
68267
REGISTERED PROFESSIONAL ENGINEER
1/25/02

SEAL

AS-BUILT
1/25/02

intellex CORPORATION
CONTROL SYSTEMS ENGINEERS
11230 WILCREST GREEN Houston, Texas 77042

CH2M HILL
7600 West Tidwell Road, Suite 400
Houston Tx 77040
713.462.0161

Binkley & Barfield, Inc.
Consulting Engineers
1710 Seamist Drive Houston, Texas 77008

ALMEDA SIMS BIOSOLIDS DRYER REHABILITATION

CIP NO 0298-05-3
FILE NO: 4289-4

INSTRUMENT AIR SCHEMATIC
BIOSOLIDS LOADING BUILDING

CITY OF HOUSTON

DEPARTMENT OF PUBLIC WORKS AND ENGINEERING
ENGINEERING, CONSTRUCTION AND REAL ESTATE GROUP

SECTION APPROVALS

WATER ENGINEERING	TRAFFIC AND SIGNAL ENGINEERING
WASTEWATER ENGINEERING	STREET & BRIDGE ENGINEERING
STORMWATER ENGINEERING	CONSTRUCTION

OTHER DEPARTMENTS

PLANNING AND DEVELOPMENT	SPONSOR DEPARTMENT

CITY ENGINEER _____ DATE _____

DIRECTOR OF PUBLIC WORKS AND ENGINEERING _____ DATE _____

SUBMITTED:	DESIGNED BY: JMC
SCALE: NONE NONE	DRAWN BY: RDF
DATE: 1/20/99	DWG. NO. : 145
SURVEY BY: N/A	SHT NO 61 of 159 SHTS
F B NO:	CITY DWG NO: 35001

CADD DWG FILE NO : K:\BBI-ASV45.DWG
FILE DATE--OPERATOR-

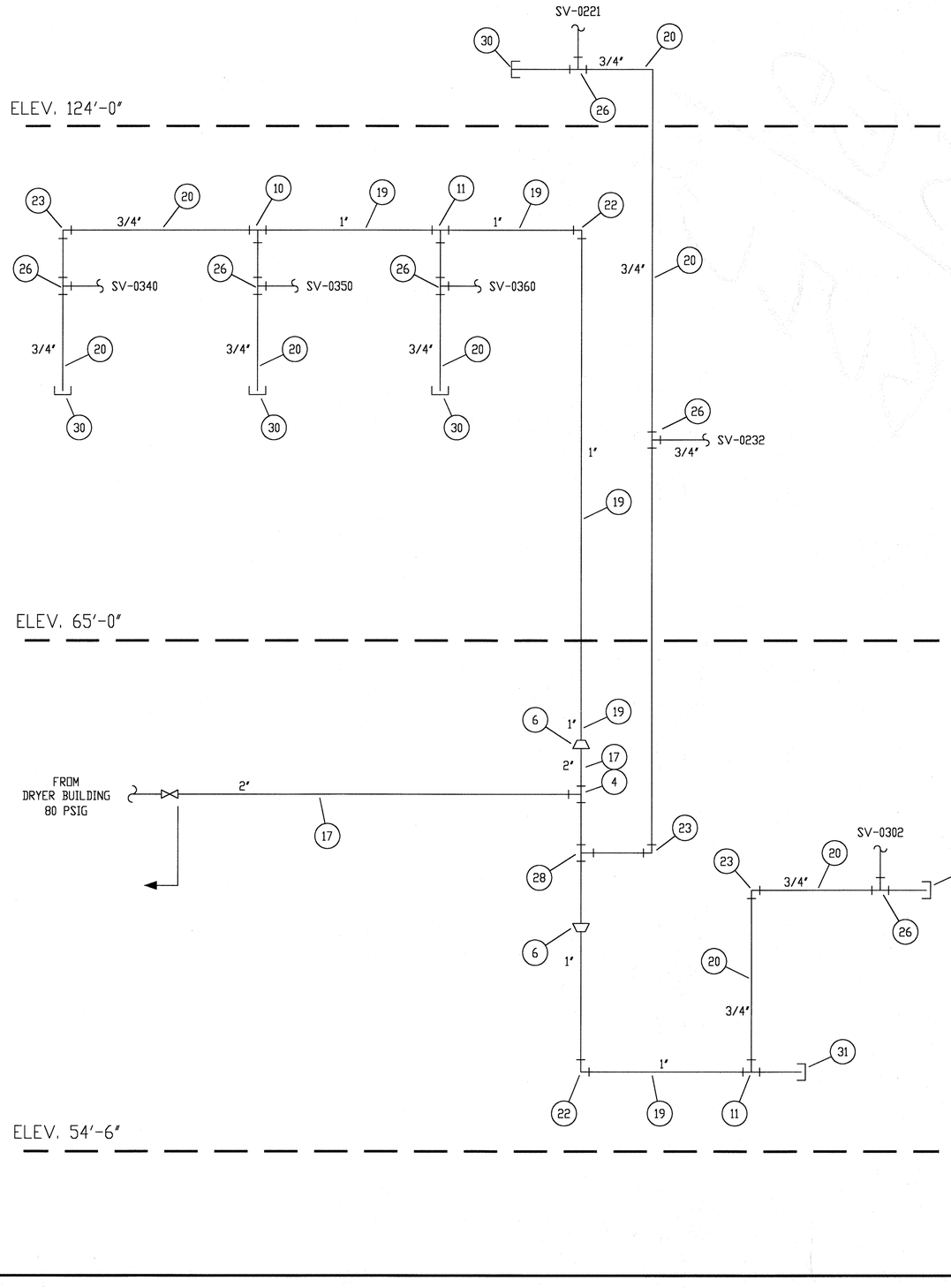

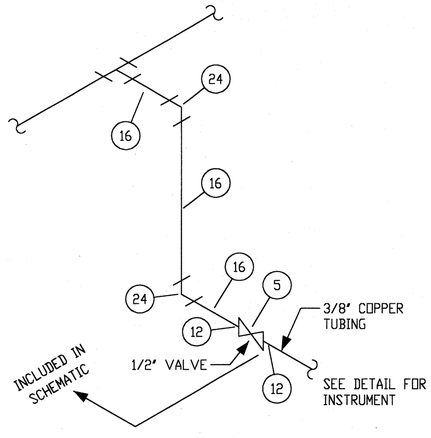

TYPE "A" AIR SUPPLY

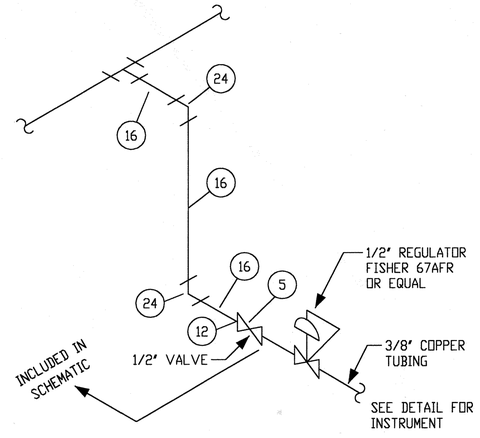

TYPE "B" AIR SUPPLY

BILL OF MATERIAL

MARK	QUANTITY	MATERIAL	DESCRIPTION
1	0		PRESSURE REDUCING VALVE
2	0		PRESSURE GAUGE, 4-1/2" 0-160 PSIG
3	0		PRESSURE RELIEF VALVE
4	1	COPPER	2" TEE
5	6		1/2" GLOBE VALVE THREADED
6	2	COPPER	2"x1" REDUCER
7	0	COPPER	2"x1-1/2" REDUCER
8	0	COPPER	2"x2"x1" TEE
9	0	COPPER	2"x3/4" REDUCER
10	1	COPPER	1"x3/4"x3/4" TEE
11	2	COPPER	1"x1"x3/4" TEE
12	12		1/2" THREADED ADAPTOR
13	0		2" THREAED ADAPTOR
14	0	COPPER	1" TEE
15	0		1" VALVE
16	AR	COPPER	1/2" TUBING
17	AR	COPPER	2" TUBING
18	0	COPPER	1-1/2" TUBING
19	AR	COPPER	1" TUBING
20	AR	COPPER	3/4" TUBING
21	AR	COPPER	2" ELL
22	2	COPPER	1" ELL
23	2	COPPER	3/4" ELL
24	12	COPPER	1/2" ELL
25	0	COPPER	3/4"x1/2" REDUCING ELL
26	6	COPPER	3/4"x3/4"x1/2" TEE
27	0	COPPER	1"x1"x1/2" TEE
28	1	COPPER	2"x2"x3/4" TEE
29	0	COPPER	1-1/2" PIPE CAP
30	5	COPPER	3/4" PIPE CAP
31	1	COPPER	1" PIPE CAP
32	0	COPPER	2"x2"x1/2" TEE
33	0	COPPER	1-1/2" X 1-1/2" X 3/4" TEE
34	0	COPPER	3/4" VALVE

NOTES:

1. AIR CAPACITY OF 1/4" FISHER 67AFR REGULATOR WITH 40 PSIG INLET PRESSURE, SET PRESSURE OF 20 PSIG WITH 10% DROOP IS APPROXIMATELY 360 SCFH.
2. AIR CAPACITY OF 1/2" FISHER 95H REGULATOR WITH 60 PSIG INLET PRESSURE, SET PRESSURE OF 40 PSIG WITH 10% DROOP IS APPROXIMATELY 1600 SCFH.
3. PRESSURE RELIEF VALVE IS SIZED TO MAINTAIN SET PRESSURE OF 45 PSIG WITH NO OVERPRESSURE BASED UPON THE FAILURE OF THE 1/2" REGULATOR HAVING A Cg VALUE OF 67. MAXIMUM RELIEF FLOW RATE WILL BE 5025 SCFH.
4. ALL MATERIAL QUANTITIES ARE ESTIMATED. CONTRACTOR SHALL BE RESPONSIBLE TO SUPPLY ACTUAL QUANTITY REQUIRED.
5. AIR DESIGN FOR AN I/P TRANSDUCER AND POSITIONER IS APPROXIMATELY 30 SCFH.

REV NO	DESCRIPTION	APP'D	DATE

SEAL

SEAL

STATE OF TEXAS
JESSE M. CARR III
52288
REGISTERED
PROFESSIONAL ENGINEER
2-24-99

intellex CORPORATION
CONTROL SYSTEMS ENGINEERS
11230 WILCREST GREEN Houston, Texas 77042

CH2M HILL
7600 West Tidwell Road, Suite 400
Houston Tx 77040
713.462.0161

Binkley & Barfield, Inc.
Consulting Engineers
1710 Seamist Drive Houston, Texas 77008

ALMEDA SIMS BIOSOLIDS DRYER REHABILITATION

CIP NO 0298-05-3
FILE NO: 4289-4

INSTRUMENT AIR SCHEMATIC
BIOSOLIDS LOADING BUILDING

CITY OF HOUSTON

DEPARTMENT OF PUBLIC WORKS AND ENGINEERING
ENGINEERING, CONSTRUCTION AND REAL ESTATE GROUP

SECTION APPROVALS

WATER ENGINEERING

TRAFFIC AND SIGNAL ENGINEERING

WASTEWATER ENGINEERING 2-25-99

STREET & BRIDGE ENGINEERING

STORMWATER ENGINEERING

CONSTRUCTION 3/2/99

2/24/99

OTHER DEPARTMENTS

PLANNING AND DEVELOPMENT

SPONSOR DEPARTMENT

CITY ENGINEER 3-2-99 DATE

DIRECTOR OF PUBLIC WORKS AND ENGINEERING 3/5/99 DATE

SUBMITTED:
SCALE: NONE
NONE
DATE:1/20/99
SURVEY BY: N/A
F B NO:

DESIGNED BY: JMC
DRAWN BY: RDF
DWG. NO. : 145
SHT NO 61 of 159 SHTS

CITY DWG NO:
35001

ORIGINAL SCALE IN INCHES
FOR REDUCED PLANS
0 1 2 3

CADD DWG FILE NO : K:\RBI-AS\LO.DWG
FILE DATE:-OPERATOR:

LOGIC SYMBOLS

- NOT — LOGICAL 'NOT'
- AND — LOGICAL 'AND'
- OR — LOGICAL 'OR'
- × — MULTIPLIER
- ÷ — DIVIDER
- Σ — SUMMER
- > — HIGH SELECTOR
- < — LOW SELECTOR
- TIMER — TIMER
- LATCH — LATCH
- /L — LOW
- H/ — HIGH
- LOW LIMITER
- HIGH LIMITER
- DATA CORRELATION
- TOTALIZER — TOTALIZER
- INTEGRATOR
- d/dt — DERIVATIVE
- P I — PI CONTROLLER
- P I D — PID CONTROLLER
- ELECTRICAL TERMINATION
- A — ANALOG SIGNAL
- T — TRANSFER FUNCTION
- XXX — DCS CONFIGURED TAG
- FLOW DIRECTION

- LAL / XXXX — FIRST LETTER(S) SUCCEEDING LETTERS; FIELD INSTRUMENT (LOCAL); INSTRUMENT TAG NUMBER
- FI / XXXX — PANEL MOUNTED INSTRUMENT (LOCAL PANEL)
- XX M — OUTPUT - MOMENTARY ('XX' DENOTES TYPE)
- XX L — OUTPUT - LATCH ('XX' DENOTES TYPE)
- XX — INPUT ('XX' DENOTES TYPE)
- X — LOGIC BLOCK ('X' DENOTES FUNCTION)
- ELECTRICAL INTERCONNECT
- X — INDICATOR LIGHT ('X' DENOTES LAMP COLOR)
- X / X — EQUIPMENT ('X' DENOTES EQUIPMENT DESCRIPTION)
- SV-XXXX — SOLENOID VALVE
- MOTOR — ELECTRICAL MOTOR
- YA-XXXX — DISPLAY POINT
- HAND | OFF | AUTO — HS-XXXX — HAND SWITCH (HAND-OFF-AUTO)
- STOP | START — HS-XXXX — HAND SWITCH (START/STOP)
- PUMP 5 | PUMP 6 — HS-XXXX — HAND SWITCH (SELECTOR SWITCH)

ABBREVIATIONS & LETTER SYMBOLS

A	ANALOG VALUE FUNCTION
AI	ANALOG INPUT
AND	LOGICAL AND
AO	ANALOG OUTPUT
DEG F	DEGREES FAHRENHEIT
DI	DIGITAL INPUT
DO	DIGITAL OUTPUT
H/	HIGH SIGNAL MONITOR
HH/	HIGH HIGH SIGNAL MONITOR
H/L	HIGH/LOW SIGNAL MONITOR
HS-	HAND SWITCH
LATCH	SIGNAL LATCH
/L	LOW SIGNAL MONITOR
/LL	LOW LOW SIGNAL MONITOR
/L1	LEVEL 1 SETPOINT
/L2	LEVEL 2 SETPOINT
/L3	LEVEL 3 SETPOINT
/L4	LEVEL 4 SETPOINT
MCC	MOTOR CONTROL CENTER
NOT	SIGNAL INVERT
OR	LOGICAL OR
OS	ONE-SHOT MULTIVIBRATOR
PI	PROPORTIONAL-INTEGRAL CONTROLLER
PID	PROPORTIONAL-INTEGRAL-DERIVATIVE CONTROLLER
PV	PROCESS VARIABLE
SC	SPEED CONTROLLER
SP	SET POINT
T	TRANSFER FUNCTION
TDLYOFF	TIME DELAY OFF
TDLYON	TIME DELAY ON
f(t)	TIME DEPENDENT FUNCTION
Δ	DIFFERENCE
X	MULTIPLIER

LINE LEGEND

- SOFTWARE LINK
- NON-CONNECTING LINES
- ELECTRICAL SIGNAL
- PNEUMATIC SIGNAL

INSTRUMENT IDENTIFICATION LETTERS

	FIRST LETTERS		SUCCEEDING LETTERS		
	MEASURING OR INITIATING VARIABLE	MODIFIER	READOUT OR PASSIVE FUNCTION	OUTPUT FUNCTION	MODIFIER
A	ANALYSIS (+)		ALARM		
B	BURNER, COMBUSTION				
C				CONTROL	
D		DIFFERENTIAL			
E	VOLTAGE		SENSOR (PRIMARY ELEMENT)		
F	FLOW RATE	RATIO (FRACTION)			
G		GAUGE	GLASS, VIEWING DEVICE		
H	HAND				HIGH
I	CURRENT (ELECTRICAL)		INDICATE		
J	POWER	SCAN			
K	TIME, TIME SCHEDULE	TIME RATE OF CHANGE		CONTROL STATION	
L	LEVEL		LIGHT		LOW
M		MOMENTARY MOTION			MIDDLE, INTERMEDIATE
N	SURGE				
O			ORIFICE, RESTRICTION		
P	PRESSURE, VACUUM		POINT (TEST) CONNECTION		
Q	QUANTITY, EVENT	INTEGRATE, TOTALIZE			
R	RADIATION		RECORD, RELIEF		
S	SPEED, SOLENOID, FREQUENCY	SAFETY		SWITCH	
T	TEMPERATURE			TRANSMIT	
U	MULTIVARIABLE		MULTI-FUNCTION	MULTI-FUNCTION	MULTI-FUNCTION
V	VIBRATION, MECHANICAL ANALYSIS			VALVE, DAMPER, LOUVER	
W	WEIGHT, FORCE		WELL		
X	TORQUE ON-OFF (VALVES)	X AXIS			
Y	EVENT, STATE OR PRESENCE	Y AXIS		RELAY, COMPUTE, CONVERT	
Z	POSITION, DIMENSION	Z AXIS		DRIVER, ACTUATOR, UNCLASSIFIED FINAL CONTROL ELEMENT	

(+) WHEN USED, EXPLANATION IS SHOWN ADJACENT TO INSTRUMENT SYMBOL. SEE ABBREVIATIONS AND LETTER SYMBOL

REV NO	DESCRIPTION	APP'D	DATE

SEAL — AS-BUILT 1/25/02

SEAL — STATE OF TEXAS, JESSE M. CARR III, 52288, REGISTERED PROFESSIONAL ENGINEER, 2-2499

intellex CORPORATION
CONTROL SYSTEMS ENGINEERS
11230 WILCREST GREEN Houston, Texas 77042

RATNALA & BAHL, INC.
Engineers • Architects • Surveyors
11767 KATY FREEWAY, SUITE 510
HOUSTON, TEXAS 77079

CH2M HILL
7600 West Tidwell Road, Suite 400
Houston Tx 77040
713.462.0161

Binkley & Barfield, Inc.
Consulting Engineers
1710 Seamist Drive Houston, Texas 77008

ALMEDA SIMS
BIOSOLIDS
DRYER REHABILITATION

CIP NO 0298-05-3
FILE NO: 4289-4

CONTROL SYSTEM DRAWING
SYMBOL LEGEND &
ABBREVIATIONS

CITY OF HOUSTON
DEPARTMENT OF PUBLIC WORKS AND ENGINEERING
ENGINEERING, CONSTRUCTION AND REAL ESTATE GROUP

SECTION APPROVALS

WATER ENGINEERING — TRAFFIC AND SIGNAL ENGINEERING
WASTEWATER ENGINEERING — STREET & BRIDGE ENGINEERING
STORMWATER ENGINEERING — CONSTRUCTION 3/2/99
2/25/99
OTHER DEPARTMENTS
PLANNING AND DEVELOPMENT — SPONSOR DEPARTMENT
CITY ENGINEER — 3-2-99 DATE
DIRECTOR OF PUBLIC WORKS AND ENGINEERING — 3/1/99 DATE

SUBMITTED:
SCALE: NONE
NONE
DATE:1/11/99
SURVEY BY:
F B NO:

DESIGNED BY: JMC
DRAWN BY: RDF
DWG. NO. : LO
SHT NO 62 of 159 SHTS

CITY DWG NO:
35001

ORIGINAL SCALE IN INCHES FOR REDUCED PLANS
0 1 2 3

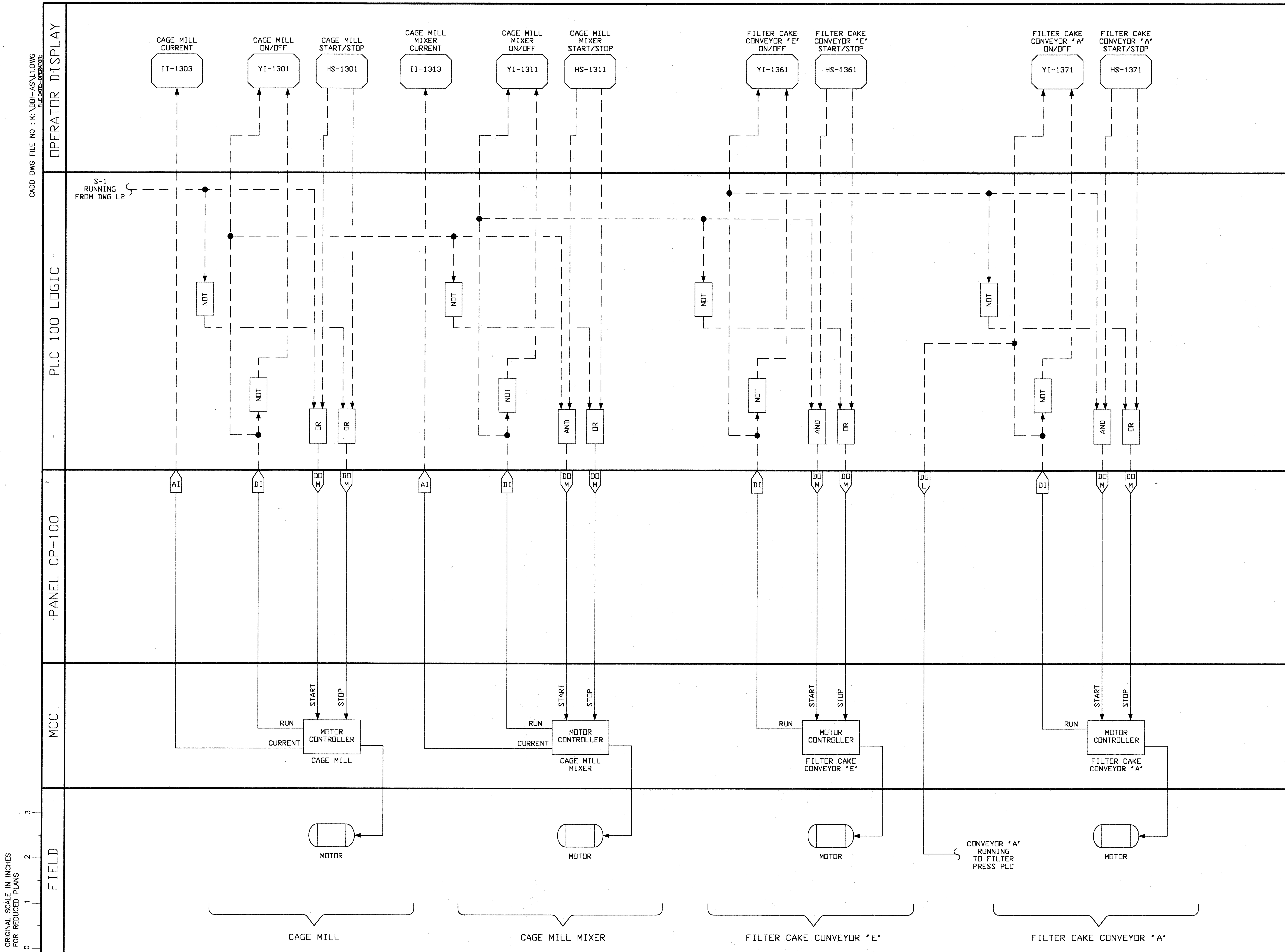

REV NO	DESCRIPTION	APP'D	DATE

SEAL: AS-BUILT 1/25/02

SEAL: STATE OF TEXAS — JESSE M. CARR III — 52288 — REGISTERED PROFESSIONAL ENGINEER — 2-24-99

intellex CORPORATION
CONTROL SYSTEMS ENGINEERS
11230 WILCREST GREEN Houston, Texas 77042

CH2M HILL
7600 West Tidwell Road, Suite 400
Houston Tx 77040
713.462.0161

Binkley & Barfield, Inc.
Consulting Engineers
1710 Seamist Drive Houston, Texas 77008

ALMEDA SIMS BIOSOLIDS DRYER REHABILITATION

CIP NO 0298-05-3
FILE NO: 4289-4

LOGIC DIAGRAM BIOSOLIDS DRYER NO.1 SHEET 1

CITY OF HOUSTON
DEPARTMENT OF PUBLIC WORKS AND ENGINEERING
ENGINEERING, CONSTRUCTION AND REAL ESTATE GROUP

SECTION APPROVALS

WATER ENGINEERING — TRAFFIC AND SIGNAL ENGINEERING
WASTEWATER ENGINEERING 2-26-99 — STREET & BRIDGE ENGINEERING
STORMWATER ENGINEERING 12/05/99 — CONSTRUCTION

OTHER DEPARTMENTS

PLANNING AND DEVELOPMENT — SPONSOR DEPARTMENT
CITY ENGINEER — DATE 3-2-99
DIRECTOR OF PUBLIC WORKS AND ENGINEERING — DATE 3/5/99

SUBMITTED:
SCALE: NONE NONE
DATE: 12/4/98
SURVEY BY: N/A
F B NO:
DESIGNED BY: JMC
DRAWN BY: MBB
DWG. NO. : L1
SHT NO 63 of 159 SHTS
CITY DWG NO: 35001

CADD DWG FILE NO : K:\DBI-AS\L2.DWG
FILE DATE:--OPERATOR:

OPERATOR DISPLAY

PLC 100 LOGIC

PANEL CP-100

MCC

FIELD

DIVERTER GATE NO. 1 DC1/S3 — HS-1320

SCREW CONVEYOR S-3 ON/OFF — YI-1201

SCREW CONVEYOR S-3 START/STOP — HS-1201

SCREW CONVEYOR S-1 ON/OFF — YI-1321

SCREW CONVEYOR S-1 FOR/REV/STOP — HS-1321

DIVIDER/ CONVEYOR ON/OFF — YI-1341

DIVIDER/ CONVEYOR START/STOP — HS-1341

DIVIDER/ CONVEYOR SPEED CONTROL — SC-1343

DIVIDER/ CONVEYOR SPEED — SI-1343

DC-1 RUNNING TO DWG L7

DC-1 RUNNING FROM DWG L12

ZS-1320A STATUS TO DWG L12

ZS-1320B STATUS TO DWG L12

DIVERTER GATE TO SC3 POSITION FROM DWG L12

DIVERTER GATE TO SC3 POSITION FROM DWG L7

NOT

AND

OR

DO L

DI

DO M

AO

AI

DC-1/S3 RUNNING TO DWG L7

S-1 RUNNING TO DWG L1

EMERGENCY STOP

HS-1000A DRYER #1

SY 1343 I/P

3-15 PSIG

START

STOP

REVERSE

FORWARD

RUN

MOTOR CONTROLLER

SCREW CONVEYOR S-3

SCREW CONVEYOR S-1

DIVIDER/ CONVEYOR

ZS 1320B

DC1 POSITION

ZS 1320A

S-3 POSITION

SV-1320

MOTOR

HYDRAULIC POWER UNIT

ST 1343

SCREW CONVEYOR NO. 3

SCREW CONVEYOR NO. 1

DIVIDER/CONVEYOR

ORIGINAL SCALE IN INCHES FOR REDUCED PLANS

0 1 2 3

REV NO	DESCRIPTION	APP'D	DATE

SEAL — AS-BUILT 1/25/02

SEAL — STATE OF TEXAS, JESSE M. CARR III, 52288, REGISTERED PROFESSIONAL ENGINEER, 2-24-99

intellex CORPORATION
CONTROL SYSTEMS ENGINEERS
11230 WILCREST GREEN Houston, Texas 77042

CH2M HILL
7600 West Tidwell Road, Suite 400
Houston Tx 77040
713.462.0161

Binkley & Barfield, Inc.
Consulting Engineers
1710 Seamist Drive Houston, Texas 77008

ALMEDA SIMS
BIOSOLIDS
DRYER REHABILITATION

CIP NO 0298-05-3
FILE NO: 4289-4

LOGIC DIAGRAM
BIOSOLIDS DRYER NO.1
SHEET 2

CITY OF HOUSTON
DEPARTMENT OF PUBLIC WORKS AND ENGINEERING
ENGINEERING, CONSTRUCTION AND REAL ESTATE GROUP

SECTION APPROVALS

WATER ENGINEERING

TRAFFIC AND SIGNAL ENGINEERING

WASTEWATER ENGINEERING — 2-22-99

STREET & BRIDGE ENGINEERING

STORMWATER ENGINEERING

CONSTRUCTION — 3/2/99

2/25/99

OTHER DEPARTMENTS

PLANNING AND DEVELOPMENT

SPONSOR DEPARTMENT

CITY ENGINEER — DATE 3-2-99

DIRECTOR OF PUBLIC WORKS AND ENGINEERING — DATE 3/5/99

SUBMITTED:
SCALE: NONE
NONE
DATE:12/4/98
SURVEY BY: N/A
F B NO:

DESIGNED BY: JMC
DRAWN BY: MBB
DWG. NO. : L2
SHT NO 64 of 159 SHTS

CITY DWG NO:
35001

CADD DWG FILE NO : K:\BBI-AS\L3.DWG
FILE DATE-OPERATOR:

OPERATOR DISPLAY

CYCLONE COLLECTOR DUST DISCHARGE PRESSURE PI-1332
SOLIDS OUTLET FROM CYCLONE COLLECTOR TEMPERATURE TI-1331
VAPOR OUTLET FROM CYCLONE COLLECTOR TEMPERATURE TI-1333
VAPOR OUTLET FROM CYCLONE COLLECTOR TEMPERATURE TI-1334
I.D. FAN SUCTION PRESSURE PI-1213
VAPOR FAN DISCHARGE TEMPERATURE TI-1211
MULTI-TUBE DUST COLLECTOR INLET TEMPERATURE TI-1224
VAPOR TO AIR PREHEATER TEMPERATURE TI-1212
VAPOR FAN DAMPER POSITION HC-1210
I.D. FAN DAMPER POSITION HC-1225
COMBUSTION AIR FAN DISCHARGE PRESSURE PI-1231
COMBUSTION AIR FAN DISCHARGE TEMPERATURE TI-1232
FURNACE DRAFT PRESSURE PI-1233
FURNACE NO. 1 FIRING RATE CONTROL TIC-1300

PLC 100 LOGIC

>
>
H/
SP
P I D
HIGH TEMP CYCLONE TO DWG L5
HIGH TEMP PREHEATER FROM DWG L1

PANEL CP-100

AI PT 1332
AI
AI PT 1213
AI
AI
AI
AI
AO HY 1210
AO HY 1225
AI PT 1231
AI
AI PT 1233
DO L
AO TY 1300 I/P

MCC

3-15 PSIG

FIELD

TE 1331
TE 1333
TE 1334
TE 1211
TE 1224
TE 1212
TE 1232
SV-1234 PREHEATER PROTECTION DOOR
IAS 40 PSIG ZD-1100
IAS 40 PSIG FCV-1145
IAS 40 PSIG FCV-1165

ORIGINAL SCALE IN INCHES FOR REDUCED PLANS
0 1 2 3

REV NO	DESCRIPTION	APP'D	DATE

SEAL
AS-BUILT
1/25/02

SEAL
STATE OF TEXAS
JESSE M. CARR III
52288
REGISTERED
2-24-99

intellex CORPORATION
CONTROL SYSTEMS ENGINEERS
11230 WILCREST GREEN Houston, Texas 77042

CH2M HILL
7600 West Tidwell Road, Suite 400
Houston Tx 77040
713.462.0161

Binkley & Barfield, Inc.
Consulting Engineers
1710 Seamist Drive Houston, Texas 77008

ALMEDA SIMS
BIOSOLIDS
DRYER REHABILITATION

CIP NO 0298-05-3
FILE NO: 4289-4

LOGIC DIAGRAM
BIOSOLIDS DRYER NO.1
SHEET 3

CITY OF HOUSTON
DEPARTMENT OF PUBLIC WORKS AND ENGINEERING
ENGINEERING, CONSTRUCTION AND REAL ESTATE GROUP

SECTION APPROVALS

WATER ENGINEERING
TRAFFIC AND SIGNAL ENGINEERING
WASTEWATER ENGINEERING 2-23-99
STREET & BRIDGE ENGINEERING
STORMWATER ENGINEERING
CONSTRUCTION 2/24/99

OTHER DEPARTMENTS

PLANNING AND DEVELOPMENT
SPONSOR DEPARTMENT

CITY ENGINEER 3-2-99 DATE
DIRECTOR OF PUBLIC WORKS AND ENGINEERING 3/3/99 DATE

SUBMITTED:
SCALE: NONE
NONE
DATE:12/4/98
SURVEY BY: N/A
F B NO:

DESIGNED BY: JMC
DRAWN BY: MBB
DWG. NO. : L3
SHT NO 65 of 159 SHTS
CITY DWG NO:
35001

CADD DWG FILE NO : K:\BBI-AS\L4.DWG
FILE DATE:-OPERATOR:

ORIGINAL SCALE IN INCHES FOR REDUCED PLANS
0 1 2 3

OPERATOR DISPLAY

VAPOR FAN CURRENT II-1353
VAPOR FAN ON/OFF YI-1351
VAPOR FAN START/STOP HS-1351
I. D. FAN CURRENT II-1223
I. D. FAN ON/OFF YI-1221
I. D. FAN START/STOP HS-1221
DUST COLLECTOR ROTARY VALVE ON/OFF YI-1226
DUST COLLECTOR ROTARY VALVE START/STOP HS-1226
DEODORIZING PREHEATER TEMPERATURE TI-1235
DEODORIZING PREHEATER TEMPERATURE TI-1236
FURNACE NO. 1 TEMPERATURE TI-1237
FURNACE NO. 1 TEMPERATURE TI-1238
FURNACE NO. 1 HOT AIR OUTLET TEMPERATURE TI-1239
FURNACE NO. 1 HOT AIR OUTLET TEMPERATURE TI-1240
FURNACE NO. 1 HIGH PREHEATER TEMPERATURE TAH-1234

PLC 100 LOGIC

NOT
NOT
NOT
>
>
H/
I. D. FAN STATUS TO DWG L5
VAPOR FAN STATUS TO DWG L5
FURNACE NO. 1 HIGH TEMP TO DWG L5
PREHEATER HIGH TEMP TO DWG L3

PANEL CP-100

AI DI DOM DOM AI DI DOM DOM DI DOM DOM AI AI AI AI AI AI

MCC

START STOP RUN CURRENT MOTOR CONTROLLER VAPOR FAN
START STOP RUN CURRENT MOTOR CONTROLLER I. D. FAN
START STOP RUN MOTOR CONTROLLER ROTARY VALVE

FIELD

MOTOR
MOTOR
MOTOR
TE 1235
TE 1236
TE 1237
TE 1238
TE 1239
TE 1240

VAPOR FAN
I. D. FAN
ROTARY VALVE

REV NO	DESCRIPTION	APP'D	DATE

SEAL: AS-BUILT 1/25/02

SEAL: STATE OF TEXAS JESSE M. CARR III 52286 REGISTERED PROFESSIONAL ENGINEER 2-24-99

intellex CORPORATION
CONTROL SYSTEMS ENGINEERS
11230 WILCREST GREEN Houston, Texas 77042

CH2M HILL
7600 West Tidwell Road, Suite 400
Houston Tx 77040
713.462.0161

Binkley & Barfield, Inc.
Consulting Engineers
1710 Seamist Drive Houston, Texas 77008

ALMEDA SIMS
BIOSOLIDS
DRYER REHABILITATION

CIP NO 0298-05-3
FILE NO: 4289-4

LOGIC DIAGRAM
BIOSOLIDS DRYER NO.1
SHEET 4

CITY OF HOUSTON
DEPARTMENT OF PUBLIC WORKS AND ENGINEERING
ENGINEERING, CONSTRUCTION AND REAL ESTATE GROUP

SECTION APPROVALS

WATER ENGINEERING
TRAFFIC AND SIGNAL ENGINEERING
WASTEWATER ENGINEERING 2-25-99
STREET & BRIDGE ENGINEERING
STORMWATER ENGINEERING
CONSTRUCTION 3/2/99
2/25/99

OTHER DEPARTMENTS

PLANNING AND DEVELOPMENT
SPONSOR DEPARTMENT
CITY ENGINEER 3-2-99 DATE
DIRECTOR OF PUBLIC WORKS AND ENGINEERING 3/5/99 DATE

SUBMITTED:
SCALE: NONE
NONE
DATE:12/4/98
SURVEY BY: N/A
F B NO:

DESIGNED BY: JMC
DRAWN BY: MBB
DWG. NO. : L4
SHT NO 66 of 159 SHTS

CITY DWG NO:
35001

CADD DWG FILE NO : K:\BBI-AS\L5.DWG
FILE DATE=OPERATOR

OPERATOR DISPLAY

FURNACE NO. 1 HIGH TEMP — TAH-1238
COMBUSTION AIR FAN ON/OFF — YI-1230
COMBUSTION AIR FAN START/STOP — HS-1241
AIR SUPPLY LOW PRESSURE — PAL-1001
PLANT AIR LOW PRESSURE — PAL-1002
PLANT WATER LOW PRESSURE — PAL-1003
SOOT BLOWER ON/OFF — YI-1241
SOOT BLOWER START/STOP — HS-1241
WATER SPRAY PUMP NO. 1 ON/OFF — YI-1400
WATER SPRAY PUMP NO. 1 START/STOP — HS-1400
FLAP VALVE ON/OFF — YI-1335
FLAP VALVE START/STOP — HS-1335

PLC 100 LOGIC

FURNACE NO. 1 HIGH TEMP FROM DWG L1 — H/ — NOT
I.D. FAN STATUS FROM DWG L4
VAPOR FAN STATUS FROM DWG L4
AND
NOT
NOT
NOT
NOT
NOT
DR
AND
HIGH TEMPERATURE FROM DWG L3

PANEL CP-100

DO L | DO L | DI | DO M | DO M | DI | DI | DI | DI | DO M | DO M | DI | DO M | DO M | DI | DO M | DO M

MCC

START / STOP
RUN / RUN / START
MOTOR CONTROLLER
COMBUSTION AIR FAN

START / STOP
RUN
MOTOR CONTROLLER
SOOT BLOWER

START / STOP
RUN
MOTOR CONTROLLER
WATER SPRAY PUMP NO. 1

START / STOP
RUN
MOTOR CONTROLLER
FLAP VALVE

FIELD

COMBUSTION FAN STATUS TO FLAME SAFETY SYSTEM
PERMISSIVE TO RUN TO FLAME SAFETY SYSTEM (1 PER BURNER)
MOTOR
COMBUSTION AIR FAN START FROM FLAME SAFETY SYSTEM DRYER NO. 1
PSL 1001
PSL 1002
PSL 1003
MOTOR
MOTOR
MOTOR

COMBUSTION AIR FAN
SOOT BLOWER
WATER SPRAY PUMP NO. 1
FLAP VALVE

ORIGINAL SCALE IN INCHES FOR REDUCED PLANS
0 1 2 3

REV NO	DESCRIPTION	APP'D	DATE

SEAL: AS-BUILT 1/25/02

SEAL: STATE OF TEXAS — JESSE M. CARR III — 92288 — REGISTERED PROFESSIONAL ENGINEER — 2-18-99

intellex CORPORATION
CONTROL SYSTEMS ENGINEERS
11230 WILCREST GREEN Houston, Texas 77042

CH2M HILL
7600 West Tidwell Road, Suite 400
Houston Tx 77040
713.462.0161

Binkley & Barfield, Inc.
Consulting Engineers
1710 Seamist Drive Houston, Texas 77008

ALMEDA SIMS
BIOSOLIDS
DRYER REHABILITATION

CIP NO 0298-05-3
FILE NO: 4289-4

LOGIC DIAGRAM
BIOSOLIDS DRYER NO.1
SHEET 5

CITY OF HOUSTON
DEPARTMENT OF PUBLIC WORKS AND ENGINEERING
ENGINEERING, CONSTRUCTION AND REAL ESTATE GROUP

SECTION APPROVALS

WATER ENGINEERING
TRAFFIC AND SIGNAL ENGINEERING
WASTEWATER ENGINEERING — 2-23-99
STREET & BRIDGE ENGINEERING
STORMWATER ENGINEERING
CONSTRUCTION — 3/2/99
2-24-99

OTHER DEPARTMENTS

PLANNING AND DEVELOPMENT
SPONSOR DEPARTMENT

CITY ENGINEER — DATE 3-2-99
DIRECTOR OF PUBLIC WORKS AND ENGINEERING — DATE 3/8/99

SUBMITTED:
SCALE: NONE NONE
DATE:12/4/98
SURVEY BY: N/A
F B NO:

DESIGNED BY: JMC
DRAWN BY: MBB
DWG. NO. : L5
SHT NO 67 of 159 SHTS
CITY DWG NO: 35001

CADD DWG FILE NO : K:\BBI-AS\L6.DWG
FILE DATE--OPERATOR:

OPERATOR DISPLAY

PLC 100 LOGIC

PANEL CP-100

MCC

FIELD

CAGE MILL CURRENT II-2303
CAGE MILL ON/OFF YI-2301
CAGE MILL START/STOP HS-2301
CAGE MILL MIXER CURRENT II-2313
CAGE MILL MIXER ON/OFF YI-2311
CAGE MILL MIXER START/STOP HS-2311
FILTER CAKE CONVEYOR 'F' ON/OFF YI-2361
FILTER CAKE CONVEYOR 'F' START/STOP HS-2361
FILTER CAKE CONVEYOR 'D' ON/OFF YI-2371
FILTER CAKE CONVEYOR 'D' START/STOP HS-2371

S-1 RUNNING FROM DWG L7

NOT
OR
AND

AI
DI
DOM
DOL

START
STOP
RUN
CURRENT

MOTOR CONTROLLER
CAGE MILL
CAGE MILL MIXER
FILTER CAKE CONVEYOR 'F'
FILTER CAKE CONVEYOR 'D'

MOTOR

CONVEYOR 'D' RUNNING TO FILTER PRESS PLC

CAGE MILL
CAGE MILL MIXER
FILTER CAKE CONVEYOR 'F'
FILTER CAKE CONVEYOR 'D'

ORIGINAL SCALE IN INCHES FOR REDUCED PLANS
0 1 2 3

REV NO	DESCRIPTION	APP'D	DATE

SEAL
AS EQUIV
AS-BUILT
1/25/02

SEAL
STATE OF TEXAS
JESSE H. CARR III
52288
REGISTERED
PROFESSIONAL
ENGINEER
2-20-99

intellex CORPORATION
CONTROL SYSTEMS ENGINEERS
11230 WILCREST GREEN Houston, Texas 77042

CH2M HILL
7600 West Tidwell Road, Suite 400
Houston Tx 77040
713.462.0161

Binkley & Barfield, Inc.
Consulting Engineers
1710 Seamist Drive Houston, Texas 77008

ALMEDA SIMS
BIOSOLIDS
DRYER REHABILITATION

CIP NO 0298-05-3
FILE NO: 4289-4

LOGIC DIAGRAM
BIOSOLIDS DRYER NO.2
SHEET 1

CITY OF HOUSTON
DEPARTMENT OF PUBLIC WORKS AND ENGINEERING
ENGINEERING, CONSTRUCTION AND REAL ESTATE GROUP

SECTION APPROVALS

WATER ENGINEERING
TRAFFIC AND SIGNAL ENGINEERING
Hamid Yousefi 2-25-99
WASTEWATER ENGINEERING
STREET & BRIDGE ENGINEERING
STORMWATER ENGINEERING
Gustavo Cisneros 3/2/99
CONSTRUCTION
3/2/99

OTHER DEPARTMENTS

PLANNING AND DEVELOPMENT
SPONSOR DEPARTMENT
Herbert D. Lum 3-2-99
CITY ENGINEER DATE
3/3/99
DIRECTOR OF PUBLIC WORKS AND ENGINEERING DATE

SUBMITTED:
SCALE: NONE
NONE
DATE:12/4/98
SURVEY BY: N/A
F B NO:

DESIGNED BY: JMC
DRAWN BY: MBB
DWG. NO. : L6
SHT NO 68 of 159 SHTS
CITY DWG NO:
35001

CADD DWG FILE NO : K:\BBI-AS\L7.DWG
FILE DATE–OPERATOR:

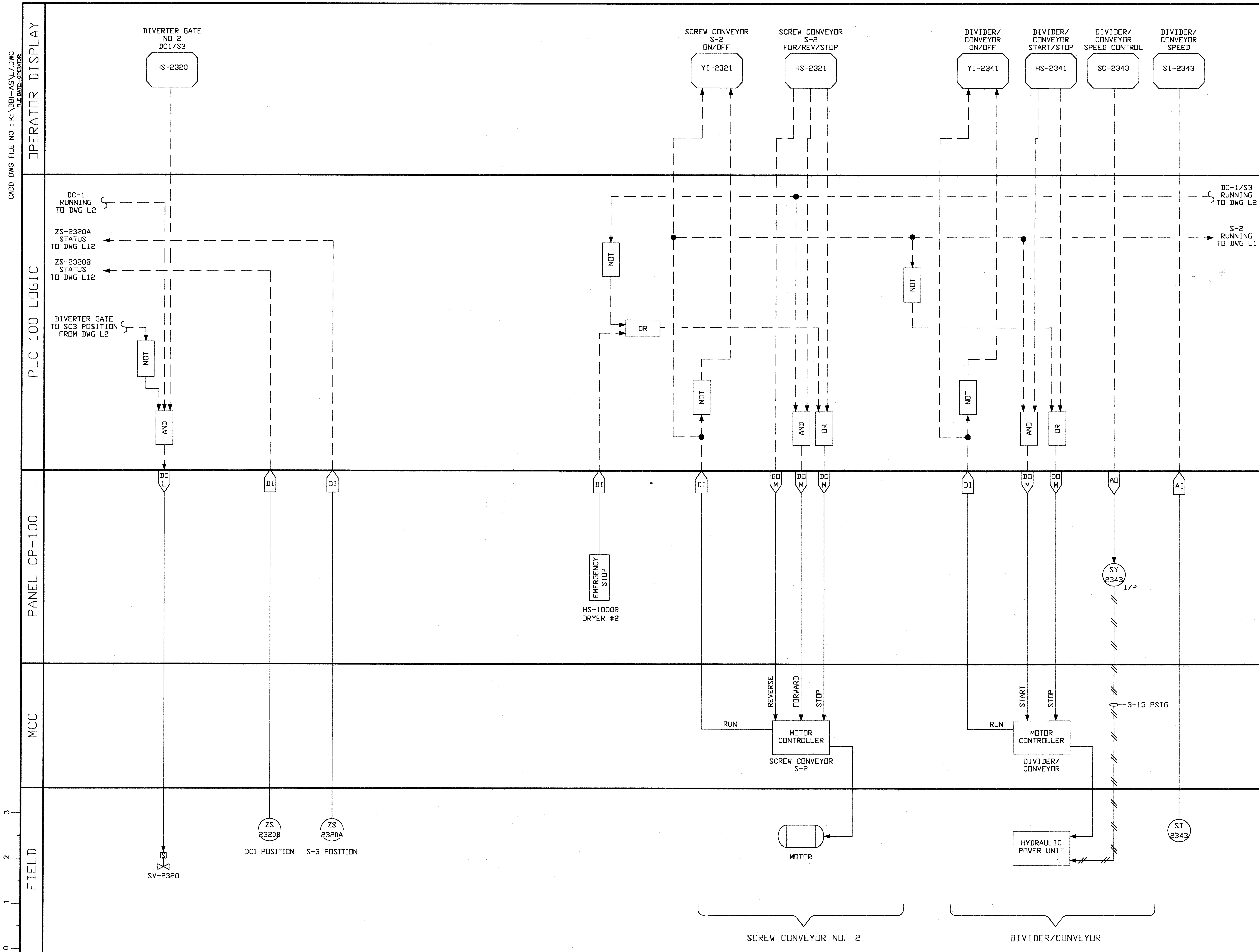

ORIGINAL SCALE IN INCHES FOR REDUCED PLANS
0 1 2 3

REV NO	DESCRIPTION	APP'D	DATE

SEAL
AS-BUILT
1/25/02

SEAL
STATE OF TEXAS
JESSE M. CARR III
52288
REGISTERED PROFESSIONAL ENGINEER
2-24-99

intellex CORPORATION
CONTROL SYSTEMS ENGINEERS
11230 WILCREST GREEN Houston, Texas 77042

CH2M HILL
7600 West Tidwell Road, Suite 400
Houston Tx 77040
713.462.0161

Binkley & Barfield, Inc.
Consulting Engineers
1710 Seamist Drive Houston, Texas 77008

ALMEDA SIMS BIOSOLIDS DRYER REHABILITATION

CIP NO 0298-05-3
FILE NO: 4289-4

LOGIC DIAGRAM
BIOSOLIDS DRYER NO.2
SHEET 2

CITY OF HOUSTON

DEPARTMENT OF PUBLIC WORKS AND ENGINEERING
ENGINEERING, CONSTRUCTION AND REAL ESTATE GROUP

SECTION APPROVALS

WATER ENGINEERING — TRAFFIC AND SIGNAL ENGINEERING
WASTEWATER ENGINEERING (2-25-99) — STREET & BRIDGE ENGINEERING
STORMWATER ENGINEERING (2/25/99) — CONSTRUCTION (3/2/99)

OTHER DEPARTMENTS

PLANNING AND DEVELOPMENT — SPONSOR DEPARTMENT
CITY ENGINEER — DATE 3-2-99
DIRECTOR OF PUBLIC WORKS AND ENGINEERING — DATE 3/5/99

SUBMITTED:
SCALE: NONE
NONE
DATE: 12/4/98
SURVEY BY: N/A
F B NO:

DESIGNED BY: JMC
DRAWN BY: MBB
DWG. NO. : L7
SHT NO 69 of 159 SHTS
CITY DWG NO: 35001

CADD DWG FILE NO : K:\BBI-AS\L8.DWG
FILE DATE-OPERATOR-

ORIGINAL SCALE IN INCHES FOR REDUCED PLANS
0 1 2 3

OPERATOR DISPLAY

CYCLONE COLLECTOR DUST DISCHARGE PRESSURE PI-2332
SOLIDS OUTLET FROM CYCLONE COLLECTOR TEMPERATURE TI-2331
VAPOR OUTLET FROM CYCLONE COLLECTOR TEMPERATURE TI-2333
VAPOR OUTLET FROM CYCLONE COLLECTOR TEMPERATURE TI-2334
I. D. FAN SUCTION PRESSURE PI-2213
VAPOR FAN DISCHARGE TEMPERATURE TI-2211
MULTI-TUBE DUST COLLECTOR INLET TEMPERATURE TI-2224
VAPOR TO AIR PREHEATER TEMPERATURE TI-2212
VAPOR FAN DAMPER POSITION HC-2210
I. D. FAN DAMPER POSITION HC-2225
COMBUSTION AIR FAN DISCHARGE PRESSURE PI-2231
COMBUSTION AIR FAN DISCHARGE TEMPERATURE TI-2232
FURNACE DRAFT PRESSURE PI-2233
FURNACE NO. 2 FIRING RATE CONTROL TIC-2300

PLC 200 LOGIC

> (TI-2333 > TI-2211)
> (TI-2334 > PI-2213)
H/ (TI-2211 > 1400 F)
SP
P I D
HIGH TEMP CYCLONE TO DWG L10
PREHEATER HIGH TEMP FROM DWG L6

PANEL CP-200

AI PT 2332
AI TE 2331
AI TE 2333
AI TE 2334
AI PT 2213
AI TE 2211
AI TE 2224
AI TE 2212
AO HY 2210
AO HY 2225
AI PT 2231
AI TE 2232
AI PT 2233
DO L SV-2234 PREHEATER PROTECTION DOOR
AO TY 2300 I/P

MCC

3-15 PSIG
IAS 40 PSIG ZD-2100
IAS 40 PSIG FCV-2145
IAS 40 PSIG FCV-2165

FIELD

REV NO	DESCRIPTION	APP'D	DATE

SEAL
AS-BUILT
1/25/02

SEAL
STATE OF TEXAS
JESSE M. CARR III
52288
REGISTERED
PROFESSIONAL ENGINEER
2-24-99

intellex CORPORATION
CONTROL SYSTEMS ENGINEERS
11230 WILCREST GREEN Houston, Texas 77042

CH2M HILL
7600 West Tidwell Road, Suite 400
Houston Tx 77040
713.462.0161

Binkley & Barfield, Inc.
Consulting Engineers
1710 Seamist Drive Houston, Texas 77008

ALMEDA SIMS
BIOSOLIDS
DRYER REHABILITATION

CIP NO 0298-05-3
FILE NO: 4289-4

LOGIC DIAGRAM
BIOSOLIDS DRYER NO.2
SHEET 3

CITY OF HOUSTON
DEPARTMENT OF PUBLIC WORKS AND ENGINEERING
ENGINEERING, CONSTRUCTION AND REAL ESTATE GROUP

SECTION APPROVALS

WATER ENGINEERING
TRAFFIC AND SIGNAL ENGINEERING
WASTEWATER ENGINEERING 2-22-99
STREET & BRIDGE ENGINEERING
STORMWATER ENGINEERING
CONSTRUCTION 2/2/99
2/25/99

OTHER DEPARTMENTS

PLANNING AND DEVELOPMENT
SPONSOR DEPARTMENT
CITY ENGINEER 3-2-99 DATE
DIRECTOR OF PUBLIC WORKS AND ENGINEERING 3/3/99 DATE

SUBMITTED:
SCALE: NONE NONE
DATE:12/4/98
SURVEY BY: N/A
F B NO:

DESIGNED BY: JMC
DRAWN BY: MBB
DWG. NO. : L8
SHT NO 70 of 159 SHTS
CITY DWG NO: 35001

CADD DWG FILE NO : K:\BBI-AS\L9.DWG
FILE DATE:-OPERATOR:

OPERATOR DISPLAY

VAPOR FAN CURRENT II-2353
VAPOR FAN ON/OFF YI-2351
VAPOR FAN START/STOP HS-2351
I. D. FAN CURRENT II-2223
I. D. FAN ON/OFF YI-2221
I. D. FAN START/STOP HS-2221
DUST COLLECTOR ROTARY VALVE ON/OFF YI-2226
DUST COLLECTOR ROTARY VALVE START/STOP HS-2226
DEODORIZING PREHEATER TEMPERATURE TI-2235
DEODORIZING PREHEATER TEMPERATURE TI-2236
FURNACE NO. 2 TEMPERATURE TI-2237
FURNACE NO. 2 TEMPERATURE TI-2238
FURNACE NO. 2 HOT AIR OUTLET TEMPERATURE TI-2239
FURNACE NO. 2 HOT AIR OUTLET TEMPERATURE TI-2240
FURNACE NO. 2 HIGH PREHEATER TEMPERATURE TAH-2234

PLC 100 LOGIC

NOT
NOT
NOT
>
>
H/

I. D. FAN STATUS TO DWG L10
VAPOR FAN STATUS TO DWG L10
FURNACE NO. 1 HIGH TEMP TO DWG L10
PREHEATER HIGH TEMP TO DWG L8

PANEL CP-100

AI DI DO M DO M AI DI DO M DO M DI DO M DO M AI AI AI AI AI AI

MCC

START STOP RUN CURRENT MOTOR CONTROLLER VAPOR FAN
START STOP RUN CURRENT MOTOR CONTROLLER I. D. FAN
START STOP RUN MOTOR CONTROLLER ROTARY VALVE

FIELD

MOTOR
MOTOR
MOTOR
TE 2235
TE 2236
TE 2237
TE 2238
TE 2239
TE 2240

VAPOR FAN
I. D. FAN
ROTARY VALVE

ORIGINAL SCALE IN INCHES
FOR REDUCED PLANS
0 1 2 3

REV NO	DESCRIPTION	APP'D	DATE

SEAL
AS-BUILT
Darrell Ross 1/25/02

SEAL
STATE OF TEXAS
JESSE M. CARR III
52288
REGISTERED
PROFESSIONAL ENGINEER
2-24-99

intellex CORPORATION
CONTROL SYSTEMS ENGINEERS
11230 WILCREST GREEN Houston, Texas 77042

CH2M HILL
7600 West Tidwell Road, Suite 400
Houston Tx 77040
713.462.0161

Binkley & Barfield, Inc.
Consulting Engineers
1710 Seamist Drive Houston, Texas 77008

ALMEDA SIMS
BIOSOLIDS
DRYER REHABILITATION

CIP NO 0298-05-3
FILE NO: 4289-4

LOGIC DIAGRAM
BIOSOLIDS DRYER NO.2
SHEET 4

CITY OF HOUSTON
DEPARTMENT OF PUBLIC WORKS AND ENGINEERING
ENGINEERING, CONSTRUCTION AND REAL ESTATE GROUP

SECTION APPROVALS

WATER ENGINEERING
TRAFFIC AND SIGNAL ENGINEERING
Hamid Tonssefi 2-25-99
WASTEWATER ENGINEERING
STREET & BRIDGE ENGINEERING
STORMWATER ENGINEERING
Courtney Quinn 3/2/99
CONSTRUCTION
Zaid Yakubi 2/25/99

OTHER DEPARTMENTS

PLANNING AND DEVELOPMENT
SPONSOR DEPARTMENT
CITY ENGINEER 3-2-99 DATE
DIRECTOR OF PUBLIC WORKS AND ENGINEERING 3/3/99 DATE

SUBMITTED:
SCALE: NONE
NONE
DATE:12/4/98
SURVEY BY: N/A
F B NO:

DESIGNED BY: JMC
DRAWN BY: MBB
DWG. NO. : L9
SHT NO 71 of 159 SHTS
CITY DWG NO:
35001

CADD DWG FILE NO : K:\BBI-AS\L10.DWG
FILE DATE--OPERATOR-

OPERATOR DISPLAY

FURNACE NO. 2 HIGH TEMP — TAH-2238
COMBUSTION AIR FAN ON/OFF — YI-2230
COMBUSTION AIR FAN START/STOP — HS-1241
WATER SPRAY PUMP NO. 2 ON/OFF — YI-2400
WATER SPRAY PUMP NO. 2 START/STOP — HS-2400
FLAP VALVE ON/OFF — YI-2335
FLAP VALVE START/STOP — HS-2335

PLC 100 LOGIC

FURNACE NO. 2 HIGH TEMP FROM DWG L6
H/
NOT
I. D. FAN STATUS FROM DWG L9
VAPOR FAN STATUS FROM DWG L9
AND
NOT
NOT
NOT
NOT
OR
AND
HIGH TEMPERATURE FROM DWG L8

PANEL CP-100

DO L
DO L
DI
DO M
DO M
DI
DO M
DO M
DI
DO M
DO M

MCC

START
STOP
RUN
RUN
START
MOTOR CONTROLLER
COMBUSTION AIR FAN
START
STOP
RUN
MOTOR CONTROLLER
WATER SPRAY PUMP NO. 2
START
STOP
RUN
MOTOR CONTROLLER
FLAP VALVE

FIELD

COMBUSTION FAN STATUS TO FLAME SAFETY SYSTEM
PERMISSIVE TO RUN TO FLAME SAFETY SYSTEM (1 PER BURNER)
MOTOR
COMBUSTION AIR FAN START FROM FLAME SAFETY SYSTEM DRYER NO. 2
MOTOR
MOTOR
COMBUSTION AIR FAN
WATER SPRAY PUMP NO. 2
FLAP VALVE

ORIGINAL SCALE IN INCHES FOR REDUCED PLANS
0 1 2 3

REV NO	DESCRIPTION	APP'D	DATE

SEAL — AS-BUILT 4/25/02

SEAL — STATE OF TEXAS, JESSE M. CARR III, 52288, REGISTERED PROFESSIONAL ENGINEER, 2-24-99

intellex CORPORATION
CONTROL SYSTEMS ENGINEERS
11230 WILCREST GREEN Houston, Texas 77042

CH2M HILL
7600 West Tidwell Road, Suite 400
Houston Tx 77040
713.462.0161

Binkley & Barfield, Inc.
Consulting Engineers
1710 Seamist Drive Houston, Texas 77008

ALMEDA SIMS
BIOSOLIDS
DRYER REHABILITATION

CIP NO 0298-05-3
FILE NO: 4289-4

LOGIC DIAGRAM
BIOSOLIDS DRYER NO.2
SHEET 5

CITY OF HOUSTON
DEPARTMENT OF PUBLIC WORKS AND ENGINEERING
ENGINEERING, CONSTRUCTION AND REAL ESTATE GROUP

SECTION APPROVALS

WATER ENGINEERING
TRAFFIC AND SIGNAL ENGINEERING
WASTEWATER ENGINEERING 2-25-99
STREET & BRIDGE ENGINEERING
STORMWATER ENGINEERING
CONSTRUCTION 3/2/99

OTHER DEPARTMENTS

PLANNING AND DEVELOPMENT
SPONSOR DEPARTMENT

CITY ENGINEER 3-2-99 DATE
DIRECTOR OF PUBLIC WORKS AND ENGINEERING 3/3/99 DATE

SUBMITTED:
SCALE: NONE NONE
DATE:12/4/98
SURVEY BY: N/A
F B NO:

DESIGNED BY: JMC
DRAWN BY: MBB
DWG. NO. : L10
SHT NO 72 of 159 SHTS
CITY DWG NO: 35001

CADD DWG FILE NO : K:\BBI-AS\L11.DWG
FILE DATE:-OPERATOR:

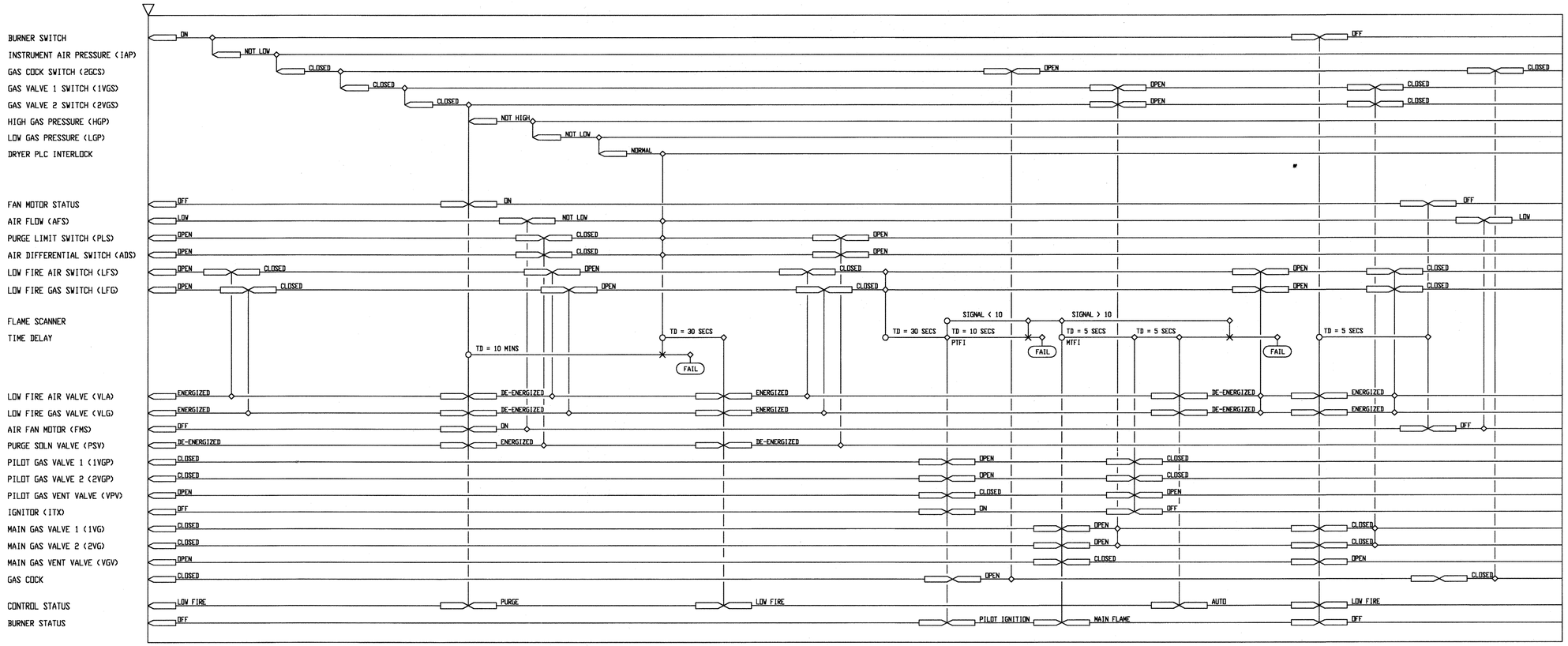

ORIGINAL SCALE IN INCHES FOR REDUCED PLANS
0 1 2 3

REV NO	DESCRIPTION	APP'D	DATE

SEAL

AS-BUILT
1/25/02

SEAL

STATE OF TEXAS
JESSE M. CARR III
52288
REGISTERED
PROFESSIONAL ENGINEER
2-28-99

intellex CORPORATION
CONTROL SYSTEMS ENGINEERS
11230 WILCREST GREEN Houston, Texas 77042

CH2M HILL
7600 West Tidwell Road, Suite 400
Houston Tx 77040
713.462.0161

Binkley & Barfield, Inc.
Consulting Engineers
1710 Seamist Drive Houston, Texas 77008

ALMEDA SIMS
BIOSOLIDS
DRYER REHABILITATION

CIP NO 0298-05-3
FILE NO: 4289-4

TIME SEQUENCE DIAGRAM
BIOSOLIDS DRYER
FLAME SAFETY SYSTEM

CITY OF HOUSTON
DEPARTMENT OF PUBLIC WORKS AND ENGINEERING
ENGINEERING, CONSTRUCTION AND REAL ESTATE GROUP

SECTION APPROVALS

WATER ENGINEERING

TRAFFIC AND SIGNAL ENGINEERING

WASTEWATER ENGINEERING
David Lowrey 2-25-99

STREET & BRIDGE ENGINEERING

STORMWATER ENGINEERING

CONSTRUCTION
3/2/99

Zia Mohammad 3/5/99

OTHER DEPARTMENTS

PLANNING AND DEVELOPMENT

SPONSOR DEPARTMENT

CITY ENGINEER
3-2-99
DATE

DIRECTOR OF PUBLIC WORKS AND ENGINEERING
3/5/99
DATE

SUBMITTED:
SCALE: NONE
NONE
DATE:12/4/98
SURVEY BY: N/A
F B NO:

DESIGNED BY: JMC
DRAWN BY: JFB
DWG. NO. : L11
SHT NO 73 of 159 SHTS

CITY DWG NO:
35001

CADD DWG FILE NO : K:\RBI-ASL\L12.DWG
FILE DATE-OPERATOR:

ORIGINAL SCALE IN INCHES FOR REDUCED PLANS
0 1 2 3

OPERATOR DISPLAY

PLC 100 LOGIC

PANEL CP-200

MCC

FIELD

DRAG CHAIN LOW SPEED TRIP RESET HS-0200
DRAG CHAIN CONVEYOR DC-2 LOW SPEED SAL-0253
DRAG CHAIN CONVEYOR DC-2 ON/OFF YI-0251
DRAG CHAIN CONVEYOR DC-2 START/STOP HS-0251
DRAG CHAIN CONVEYOR DC-1 LOW SPEED SAL-0203
DRAG CHAIN CONVEYOR DC-1 ON/OFF YI-0201
DRAG CHAIN CONVEYOR DC-1 START/STOP HS-0201
DIVERTER GATE DG-1 DC1/S3 ZI-0101
DIVERTER GATE DG-2 DC1/S3 ZI-0102

BEL-1 RUNNING FROM DWG L13
RESET TO DWG L13
DC-3 RUNNING TO DWG L13

LATCH
RESET
TDLY ON
AND
NOT
OR
DO M
DI

BEL-1 RUNNING TO DWG L18
ZS-2320A STATUS FROM DWG L7
ZS-2320B STATUS FROM DWG L7
ZS-1320A STATUS FROM DWG L2
ZS-1320B STATUS FROM DWG L2
DC-1 RUNNING TO DWG L2
DC-1 RUNNING TO DWG L20
SILO NO. 1 HIGH HIGH LEVEL FROM DWG L14
SC-3 RUNNING FROM DWG L2
DIVERTER GATE TO SC-3 POSITION TO DWG L2

SSL 0253
SSL 0203
START
STOP
RUN
MOTOR CONTROLLER
DRAG CHAIN CONVEYOR DC-2
DRAG CHAIN CONVEYOR DC-1
MOTOR
HS-0251
HS-0201

DRAG CHAIN CONVEYOR NO. 2
DRAG CHAIN CONVEYOR NO. 1

REV NO	DESCRIPTION	APP'D	DATE

SEAL
AS BUILT
1/25/05

SEAL
STATE OF TEXAS
JESSE M. CARR III
52288
REGISTERED
PROFESSIONAL ENGINEER
2-24-99

intellex CORPORATION
CONTROL SYSTEMS ENGINEERS
11230 WILCREST GREEN Houston, Texas 77042

RATNALA & BAHL, INC.
Engineers • Architects • Surveyors
11767 KATY FREEWAY, SUITE 510
HOUSTON, TEXAS 77079

CH2M HILL
7600 West Tidwell Road, Suite 400
Houston Tx 77040
713.462.0161

Binkley & Barfield, Inc.
Consulting Engineers
1710 Seamist Drive Houston, Texas 77008

ALMEDA SIMS
BIOSOLIDS
DRYER REHABILITATION

CIP NO 0298-05-3
FILE NO: 4289-4

LOGIC DIAGRAM
DRIED BIOSOLIDS CONVEYING
SHEET I

CITY OF HOUSTON
DEPARTMENT OF PUBLIC WORKS AND ENGINEERING
ENGINEERING, CONSTRUCTION AND REAL ESTATE GROUP

SECTION APPROVALS

WATER ENGINEERING
TRAFFIC AND SIGNAL ENGINEERING
WASTEWATER ENGINEERING 3/25/99
STREET & BRIDGE ENGINEERING
STORMWATER ENGINEERING
CONSTRUCTION 3/4/99
3/25/99

OTHER DEPARTMENTS

PLANNING AND DEVELOPMENT
SPONSOR DEPARTMENT
CITY ENGINEER 3-2-99 DATE
DIRECTOR OF PUBLIC WORKS AND ENGINEERING 3/3/99 DATE

SUBMITTED:
SCALE: NONE
NONE
DATE:12/4/98
SURVEY BY:
F B NO:

DESIGNED BY: JMC
DRAWN BY: MBB
DWG. NO. : L12
SHT NO 74 of 159 SHTS
CITY DWG NO:
35001

CADD DWG FILE NO : K:\RBI-AS\L13.DWG
FILE DATE-OPERATOR:

OPERATOR DISPLAY

PLC 100 LOGIC

PANEL CP-200

MCC

FIELD

BUCKET ELEVATOR BEL-1 ON/OFF
YI-0211

BUCKET ELEVATOR BEL-1 START/STOP
HS-0211

SCREW CONVEYOR SC-4 LOW SPEED
SAL-0243

SCREW CONVEYOR SC-4 ON/OFF
YI-0241

SCREW CONVEYOR SC-4 START/STOP
HS-0241

SILO SLIDE GATE SSG-1 OPEN/CLOSE
HS-0232

SILO SLIDE GATE SSG-1 OPEN/CLOSE
ZI-0233

BEL-1 RUNNING TO DWG L12

DC-2 RUNNING FROM DWG L12

RESET FROM DWG L12

RESET TO DWG L19

NOT
DR
LATCH
RESET
TDLY DN
AND
NOT
AND
DR
DR
DR
DR
AND

DI
DO M
DI
DI
DI
DI
DO M
DO M
DI
DI
DO L
DI
DI

START
STOP
RUN
MOTOR CONTROLLER
BUCKET ELEVATOR BEL-1

START
STOP
RUN
MOTOR CONTROLLER
SCREW CONVEYOR SC-4

MOTOR

START
STOP
HS-0211

SSL 0243

MOTOR

START
STOP
HS-0241

SV-0232

ZS 0233A

ZS 0233B

BUCKET ELEVATOR

SCREW CONVEYOR NO. 4

ORIGINAL SCALE IN INCHES FOR REDUCED PLANS
0 1 2 3

REV NO	DESCRIPTION	APP'D	DATE

SEAL

AS-BUILT
David Ross
1/25/02

SEAL

STATE OF TEXAS
JESSE M. CARR III
52288
REGISTERED
PROFESSIONAL ENGINEER
2-26-99

intellex CORPORATION
CONTROL SYSTEMS ENGINEERS
11230 WILCREST GREEN Houston, Texas 77042

RATNALA & BAHL, INC.
Engineers • Architects • Surveyors
11767 KATY FREEWAY. SUITE 510
HOUSTON, TEXAS 77079

CH2M HILL
7600 West Tidwell Road, Suite 400
Houston Tx 77040
713.462.0161

Binkley & Barfield, Inc.
Consulting Engineers
1710 Seamist Drive Houston, Texas 77008

ALMEDA SIMS
BIOSOLIDS
DRYER REHABILITATION

CIP NO 0298-05-3
FILE NO: 4289-4

LOGIC DIAGRAM
DRIED BIOSOLIDS CONVEYING
SHEET 2

CITY OF HOUSTON
DEPARTMENT OF PUBLIC WORKS AND ENGINEERING
ENGINEERING, CONSTRUCTION AND REAL ESTATE GROUP

SECTION APPROVALS

WATER ENGINEERING

TRAFFIC AND SIGNAL ENGINEERING

WASTEWATER ENGINEERING 2-25-99

STREET & BRIDGE ENGINEERING

STORMWATER ENGINEERING

CONSTRUCTION 3/2/99

2/25/99

OTHER DEPARTMENTS

PLANNING AND DEVELOPMENT

SPONSOR DEPARTMENT

CITY ENGINEER 3-2-99 DATE

DIRECTOR OF PUBLIC WORKS AND ENGINEERING 3/5/99 DATE

SUBMITTED:
SCALE: NONE
NONE
DATE:12/4/98
SURVEY BY:
F B NO:

DESIGNED BY: JMC
DRAWN BY: MBB
DWG. NO. : L13
SHT NO 75 of 159 SHTS

CITY DWG NO:
35001

CADD DWG FILE NO : K:\RBI-ASL\L14.DWG
FILE DATE-OPERATOR:

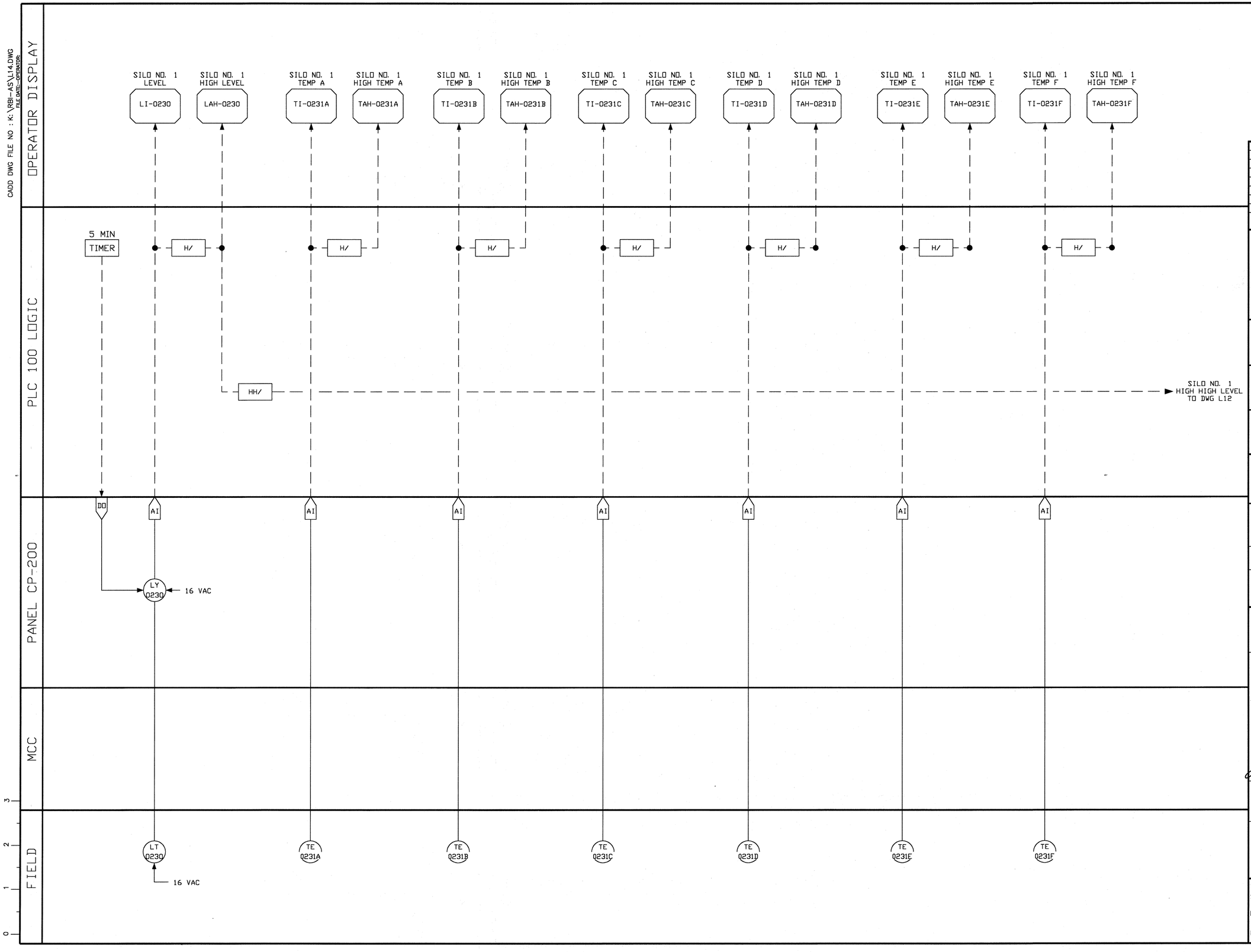

ORIGINAL SCALE IN INCHES FOR REDUCED PLANS
0 1 2 3

REV NO	DESCRIPTION	APP'D	DATE

SEAL

AS-BUILT
1/25/02

SEAL

STATE OF TEXAS
JESSE M. CARR III
No. 52288
REGISTERED
PROFESSIONAL ENGINEER
2-26-99

intellex CORPORATION
CONTROL SYSTEMS ENGINEERS
11230 WILCREST GREEN Houston, Texas 77042

RATNALA & BAHL, INC.
Engineers • Architects • Surveyors
11767 KATY FREEWAY, SUITE 510
HOUSTON, TEXAS 77079

CH2M HILL
7600 West Tidwell Road, Suite 400
Houston Tx 77040
713.462.0161

Binkley & Barfield, Inc.
Consulting Engineers
1710 Seamist Drive Houston, Texas 77008

ALMEDA SIMS
BIOSOLIDS
DRYER REHABILITATION

CIP NO 0298-05-3
FILE NO: 4289-4

LOGIC DIAGRAM
DRIED BIOSOLIDS CONVEYING
SHEET 3

CITY OF HOUSTON
DEPARTMENT OF PUBLIC WORKS AND ENGINEERING
ENGINEERING, CONSTRUCTION AND REAL ESTATE GROUP

SECTION APPROVALS

WATER ENGINEERING

TRAFFIC AND SIGNAL ENGINEERING

WASTEWATER ENGINEERING 2-25-99

STREET & BRIDGE ENGINEERING

STORMWATER ENGINEERING

CONSTRUCTION 3/2/99

2/25/99

OTHER DEPARTMENTS

PLANNING AND DEVELOPMENT

SPONSOR DEPARTMENT

CITY ENGINEER 3-2-99 DATE

DIRECTOR OF PUBLIC WORKS AND ENGINEERING 3/5/99 DATE

SUBMITTED:
SCALE: NONE
NONE
DATE:12/4/98
SURVEY BY:
F B NO:

DESIGNED BY: JMC
DRAWN BY: MBB
DWG. NO. : L14
SHT NO 76 of 159 SHTS

CITY DWG NO:
35001

CADD DWG FILE NO : K:\RBI-ASV\L15.DWG
FILE DATE-OPERATOR:

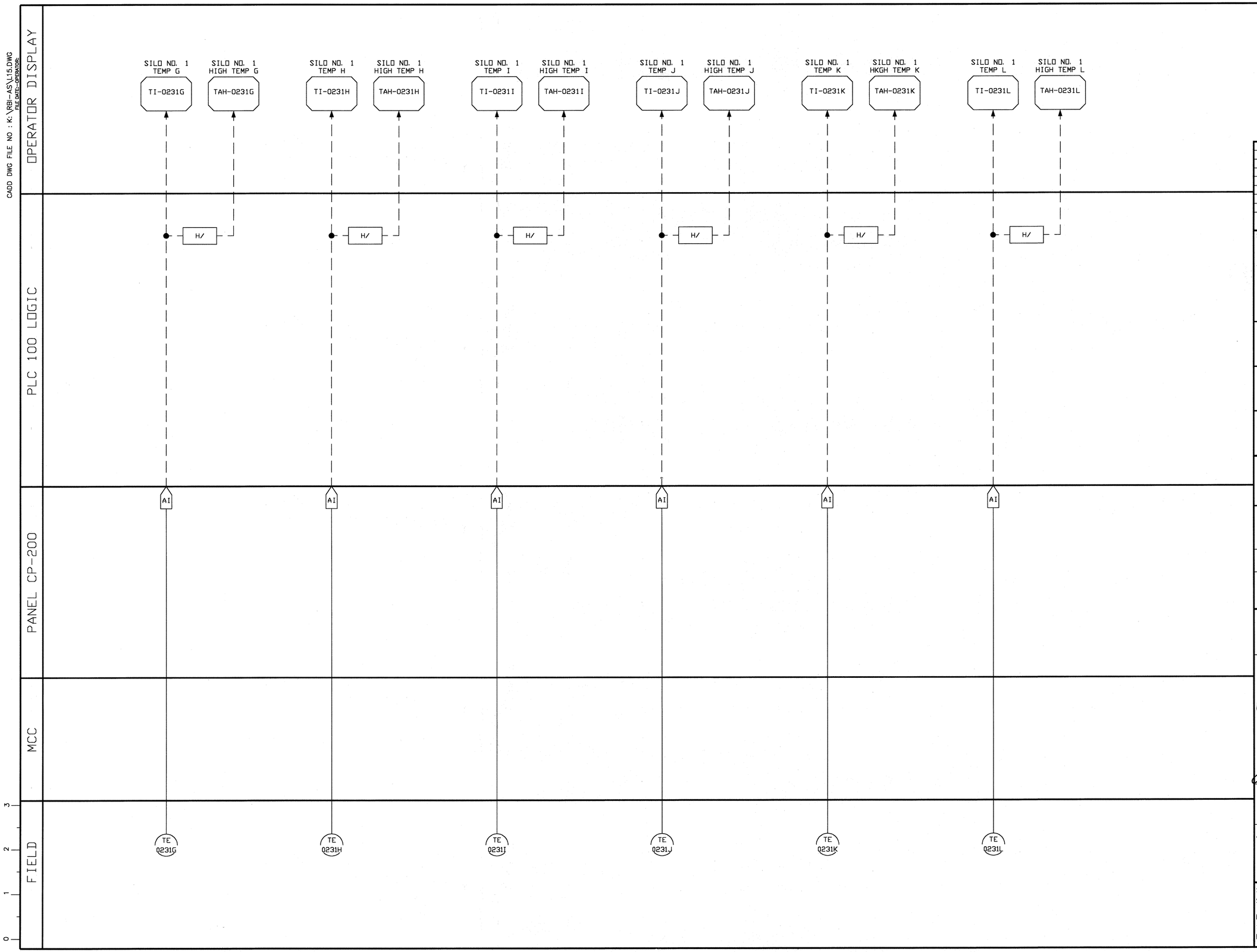

ORIGINAL SCALE IN INCHES FOR REDUCED PLANS
0 1 2 3

REV NO	DESCRIPTION	APP'D	DATE

SEAL

AS-BUILT
David Ross
1/25/02

SEAL

STATE OF TEXAS
JESSE M. CARR III
52288
REGISTERED
PROFESSIONAL
ENGINEER
2-24-99

intellex CORPORATION
CONTROL SYSTEMS ENGINEERS
11230 WILCREST GREEN Houston, Texas 77042

RATNALA & BAHL, INC.
Engineers • Architects • Surveyors
11767 KATY FREEWAY. SUITE 510
HOUSTON, TEXAS 77079

CH2M HILL
7600 West Tidwell Road, Suite 400
Houston Tx 77040
713.462.0161

Binkley & Barfield, Inc.
Consulting Engineers
1710 Seamist Drive Houston, Texas 77008

ALMEDA SIMS
BIOSOLIDS
DRYER REHABILITATION

CIP NO 0298-05-3
FILE NO: 4289-4

LOGIC DIAGRAM
DRIED BIOSOLIDS CONVEYING
SHEET 4

CITY OF HOUSTON
DEPARTMENT OF PUBLIC WORKS AND ENGINEERING
ENGINEERING, CONSTRUCTION AND REAL ESTATE GROUP

SECTION APPROVALS

WATER ENGINEERING
TRAFFIC AND SIGNAL ENGINEERING
WASTEWATER ENGINEERING
STREET & BRIDGE ENGINEERING
STORMWATER ENGINEERING
CONSTRUCTION 2/2/99

OTHER DEPARTMENTS

PLANNING AND DEVELOPMENT
SPONSOR DEPARTMENT

CITY ENGINEER 3-2-99 DATE
DIRECTOR OF PUBLIC WORKS AND ENGINEERING 3/8/99 DATE

SUBMITTED:
SCALE: NONE
NONE
DATE:12/4/98
SURVEY BY:
F B NO:

DESIGNED BY: JMC
DRAWN BY: MBB
DWG. NO. : L15
SHT NO 77 of 159 SHTS
CITY DWG NO:
35001

CADD DWG FILE NO : K:\RBI-AS\L16.DWG
FILE DATE-OPERATOR:

OPERATOR DISPLAY

PLC 100 LOGIC

PANEL CP-200

MCC

FIELD

SILO NO. 1 TEMP	TI	SILO NO. 1 HIGH TEMP	TAH	H/	AI	TE
M	0231M	M	0231M	H/	AI	TE 0231M
N	0231N	N	0231N	H/	AI	TE 0231N
O	0231O	O	0231O	H/	AI	TE 0231O
P	0231P	P	0231P	H/	AI	TE 0231P
Q	0231Q	Q	0231Q	H/	AI	TE 0231Q
R	0231R	R	0231R	H/	AI	TE 0231R

ORIGINAL SCALE IN INCHES
FOR REDUCED PLANS
0 1 2 3

REV NO	DESCRIPTION	APP'D	DATE

SEAL

AS-BUILT
Darrell Ross
2/25/02

SEAL

STATE OF TEXAS
JESSE M. CARR III
52288
REGISTERED
PROFESSIONAL ENGINEER
2-24-99

intellex CORPORATION
CONTROL SYSTEMS ENGINEERS
11230 WILCREST GREEN Houston, Texas 77042

RATNALA & BAHL, INC.
Engineers • Architects • Surveyors
11767 KATY FREEWAY, SUITE 510
HOUSTON, TEXAS 77079

CH2M HILL
7600 West Tidwell Road, Suite 400
Houston Tx 77040
713.462.0161

Binkley & Barfield, Inc.
Consulting Engineers
1710 Seamist Drive Houston, Texas 77008

ALMEDA SIMS
BIOSOLIDS
DRYER REHABILITATION

CIP NO 0298-05-3
FILE NO: 4289-4

LOGIC DIAGRAM
DRIED BIOSOLIDS CONVEYING
SHEET 5

CITY OF HOUSTON
DEPARTMENT OF PUBLIC WORKS AND ENGINEERING
ENGINEERING, CONSTRUCTION AND REAL ESTATE GROUP

SECTION APPROVALS

WATER ENGINEERING

TRAFFIC AND SIGNAL ENGINEERING

WASTEWATER ENGINEERING 2-25-99

STREET & BRIDGE ENGINEERING

STORMWATER ENGINEERING

CONSTRUCTION 2/2/99

2/25/99

OTHER DEPARTMENTS

PLANNING AND DEVELOPMENT

SPONSOR DEPARTMENT

CITY ENGINEER 3-2-99
DATE

DIRECTOR OF PUBLIC WORKS AND ENGINEERING 3/5/99
DATE

SUBMITTED:
SCALE: NONE
NONE
DATE:12/4/98
SURVEY BY:
F B NO:

DESIGNED BY: JMC
DRAWN BY: MBB
DWG. NO. : L16
SHT NO 78 of 159 SHTS

CITY DWG NO:
35001

CADD DWG FILE NO : K:\RBI-ASL\17.DWG
FILE DATE-OPERATOR:

OPERATOR DISPLAY

PLC 100 LOGIC

PANEL CP-200

MCC

FIELD

SILO NO. 1 TEMP S	SILO NO. 1 HIGH TEMP S	SILO NO. 1 TEMP T	SILO NO. 1 HIGH TEMP T	SILO NO. 1 TEMP U	SILO NO. 1 HIGH TEMP U	SILO NO. 1 TEMP V	SILO NO. 1 HIGH TEMP V	SILO NO. 1 TEMP W	SILO NO. 1 HIGH TEMP W	SILO NO. 1 TEMP X	SILO NO. 1 HIGH TEMP X
TI-0231S	TAH-0231S	TI-0231T	TAH-0231T	TI-0231U	TAH-0231U	TI-0231V	TAH-0231V	TI-0231W	TAH-0231W	TI-0231X	TAH-0231X
H/		H/		H/		H/		H/		H/	
AI		AI		AI		AI		AI		AI	
TE 0231S		TE 0231T		TE 0231U		TE 0231V		TE 0231W		TE 0231X	

ORIGINAL SCALE IN INCHES
FOR REDUCED PLANS
0 1 2 3

REV NO	DESCRIPTION	APP'D	DATE

SEAL

AS-BUILT
Darrell Ross
1/25/02

SEAL

STATE OF TEXAS
JESSE M. CARR III
52288
REGISTERED
PROFESSIONAL ENGINEER
2-24-99

intellex CORPORATION
CONTROL SYSTEMS ENGINEERS
11230 WILCREST GREEN Houston, Texas 77042

RATNALA & BAHL, INC.
Engineers • Architects • Surveyors
11767 KATY FREEWAY. SUITE 510
HOUSTON, TEXAS 77079

CH2M HILL
7600 West Tidwell Road, Suite 400
Houston Tx 77040
713.462.0161

Binkley & Barfield, Inc.
Consulting Engineers
1710 Seamist Drive Houston, Texas 77008

ALMEDA SIMS
BIOSOLIDS
DRYER REHABILITATION

CIP NO 0298-05-3
FILE NO: 4289-4

LOGIC DIAGRAM
DRIED BIOSOLIDS CONVEYING
SHEET 6

CITY OF HOUSTON
DEPARTMENT OF PUBLIC WORKS AND ENGINEERING
ENGINEERING, CONSTRUCTION AND REAL ESTATE GROUP

SECTION APPROVALS

WATER ENGINEERING

TRAFFIC AND SIGNAL ENGINEERING

WASTEWATER ENGINEERING 2-25-99

STREET & BRIDGE ENGINEERING

STORMWATER ENGINEERING

CONSTRUCTION 3/2/99

2-25-99

OTHER DEPARTMENTS

PLANNING AND DEVELOPMENT

SPONSOR DEPARTMENT

CITY ENGINEER 3-2-99 DATE

DIRECTOR OF PUBLIC WORKS AND ENGINEERING 3/5/99 DATE

SUBMITTED:
SCALE: NONE
NONE
DATE:12/4/98
SURVEY BY:
F B NO:

DESIGNED BY: JMC
DRAWN BY: MBB
DWG. NO. : L17
SHT NO 79 of 159 SHTS

CITY DWG NO:
35001

CADD DWG FILE NO : K:\RBI-AS\L18.DWG
FILE DATE-OPERATOR:

ORIGINAL SCALE IN INCHES FOR REDUCED PLANS
0 1 2 3

OPERATOR DISPLAY

PLC 100 LOGIC

PANEL CP-200

MCC

FIELD

SILO NO. 1 TEMP Y — TI-0231Y
SILO NO. 1 HIGH TEMP Y — TAH-0231Y
SILO NO. 1 TEMP Z — TI-0231Z
SILO NO. 1 HIGH ZEMP Z — TAH-0231Z
GRAVITY CHUTE SELECTOR GSS LOADING/SILO — HS-0221
GRAVITY CHUTE SELECTOR GSS LOADING/SILO — ZI-0222
DUST COLLECTOR DS-1 ON/OFF — YI-0261
DUST COLLECTOR DS-1 START/STOP — HS-0261

BEL-1 RUNNING TO DWG L20

BEL-1 RUNNING FROM DWG L12

H/

H/

AND

NOT

OR

OR

NOT

OR

OR

AI

AI

DO L

DI

DI

DI

DO M

DO M

DI

DI

START

STOP

RUN

MOTOR CONTROLLER

DUST COLLECTOR DS-1

MOTOR

START

STOP

TE Q231Y

TE Q231Z

SV-0221

ZS Q222A

ZS Q222B

HS-0261

DUST COLLECTOR NO. 1

REV NO	DESCRIPTION	APP'D	DATE

SEAL

AS BUILT
1/25/02

SEAL

STATE OF TEXAS
JESSE M. CARR III
52288
REGISTERED PROFESSIONAL ENGINEER
2-24-99

intellex CORPORATION
CONTROL SYSTEMS ENGINEERS
11230 WILCREST GREEN Houston, Texas 77042

RATNALA & BAHL, INC.
Engineers • Architects • Surveyors
11767 KATY FREEWAY. SUITE 510
HOUSTON, TEXAS 77079

CH2M HILL
7600 West Tidwell Road, Suite 400
Houston Tx 77040
713.462.0161

Binkley & Barfield, Inc.
Consulting Engineers
1710 Seamist Drive Houston, Texas 77008

ALMEDA SIMS
BIOSOLIDS
DRYER REHABILITATION

CIP NO 0298-05-3
FILE NO: 4289-4

LOGIC DIAGRAM
DRIED BIOSOLIDS CONVEYING
SHEET 7

CITY OF HOUSTON
DEPARTMENT OF PUBLIC WORKS AND ENGINEERING
ENGINEERING, CONSTRUCTION AND REAL ESTATE GROUP

SECTION APPROVALS

WATER ENGINEERING

TRAFFIC AND SIGNAL ENGINEERING

WASTEWATER ENGINEERING 2-25-99

STREET & BRIDGE ENGINEERING

STORMWATER ENGINEERING

CONSTRUCTION 3/2/99

2-25-99

OTHER DEPARTMENTS

PLANNING AND DEVELOPMENT

SPONSOR DEPARTMENT

CITY ENGINEER 3-2-99 DATE

DIRECTOR OF PUBLIC WORKS AND ENGINEERING 3/3/99 DATE

SUBMITTED:
SCALE: NONE
NONE
DATE:12/4/98
SURVEY BY:
F B NO:

DESIGNED BY: JMC
DRAWN BY: MBB
DWG. NO. : L18
SHT NO 80 of 159 SHTS
CITY DWG NO:
35001

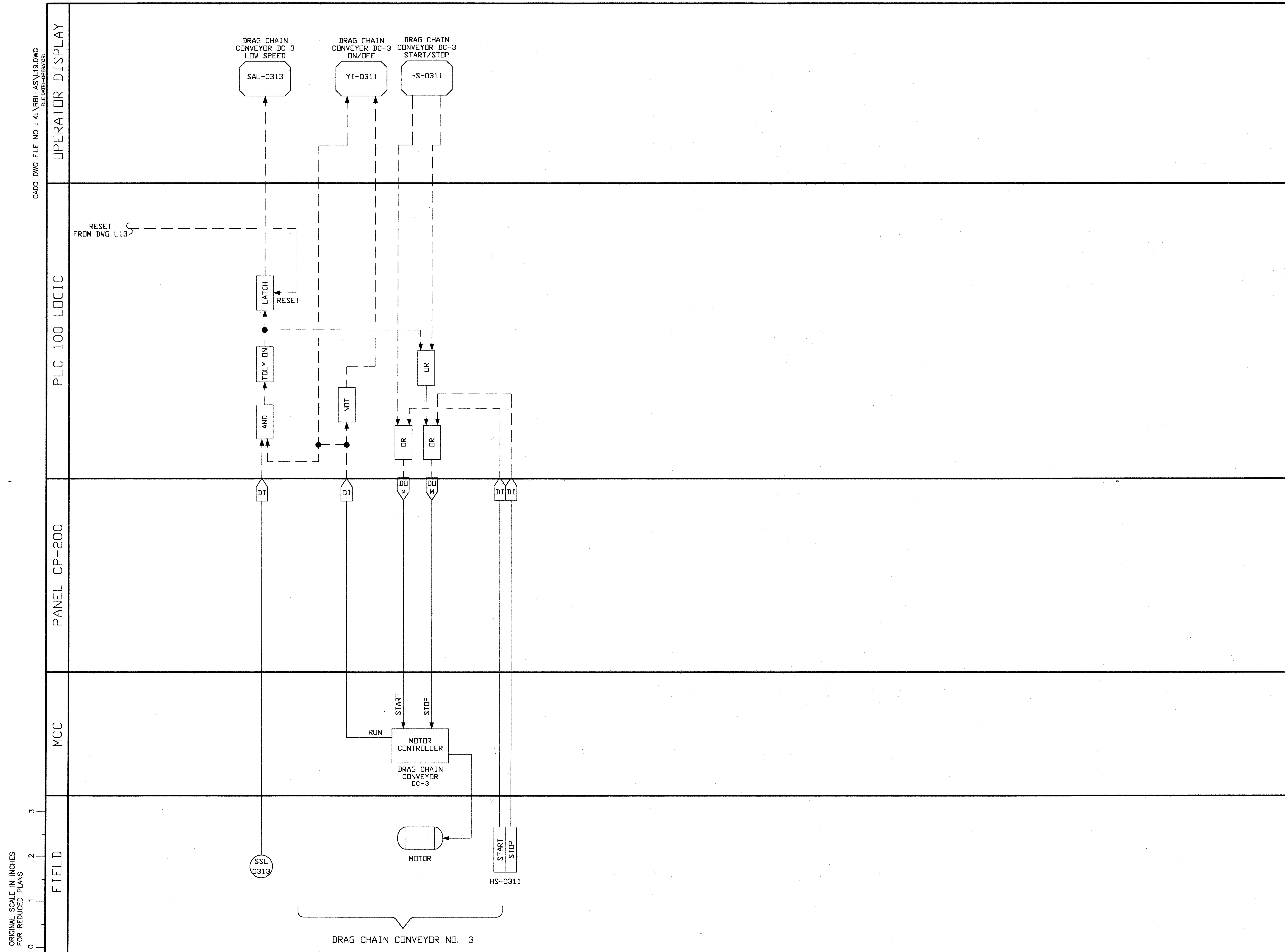

REV NO	DESCRIPTION	APP'D	DATE

SEAL

AS-BUILT
1/25/02

SEAL

STATE OF TEXAS
JESSE M. CARR III
52288
REGISTERED PROFESSIONAL ENGINEER
2-24-99

intellex CORPORATION
CONTROL SYSTEMS ENGINEERS
11230 WILCREST GREEN Houston, Texas 77042

RATNALA & BAHL, INC.
Engineers • Architects • Surveyors
11767 KATY FREEWAY, SUITE 510
HOUSTON, TEXAS 77079

CH2M HILL
7600 West Tidwell Road, Suite 400
Houston Tx 77040
713.462.0161

Binkley & Barfield, Inc.
Consulting Engineers
1710 Seamist Drive Houston, Texas 77008

ALMEDA SIMS
BIOSOLIDS
DRYER REHABILITATION

CIP NO 0298-05-3
FILE NO: 4289-4

LOGIC DIAGRAM
DRIED BIOSOLIDS CONVEYING
SHEET 8

CITY OF HOUSTON

DEPARTMENT OF PUBLIC WORKS AND ENGINEERING
ENGINEERING, CONSTRUCTION AND REAL ESTATE GROUP

SECTION APPROVALS

WATER ENGINEERING
TRAFFIC AND SIGNAL ENGINEERING
2-25-99
WASTEWATER ENGINEERING
STREET & BRIDGE ENGINEERING
3/2/99
STORMWATER ENGINEERING
CONSTRUCTION
2/25/99

OTHER DEPARTMENTS

PLANNING AND DEVELOPMENT
SPONSOR DEPARTMENT

CITY ENGINEER 3-2-99 DATE
DIRECTOR OF PUBLIC WORKS AND ENGINEERING 3/6/99 DATE

SUBMITTED:
SCALE: NONE
NONE
DATE: 12/4/98
SURVEY BY:
F B NO:

DESIGNED BY: JMC
DRAWN BY: MBB
DWG. NO. : L19
SHT NO 81 of 159 SHTS
CITY DWG NO:
35001

CADD DWG FILE NO : K:\RBI-AS\L20.DWG
FILE DATE-SPENNER

OPERATOR DISPLAY

PLC 100 LOGIC

PANEL CP-200

MCC

FIELD

CONVEYOR SC-4
DISCHARGE
PLUGGED CHUTE
LAH-0301

DUST COLLECTOR
DS-2
ON/OFF
YI-0371

DUST COLLECTOR
DS-2
START/STOP
HS-0371

BEL-1
RUNNING
FROM DWG L18

DC-1
RUNNING
FROM DWG L12

DR
DR
DR
DR
DR

NOT
NOT
NOT

AND

DI
DI
DI
DI
DI

DDL
DDL
DDM
DDM

G
ON

R
OFF

START
STOP
RUN

MOTOR
CONTROLLER
DUST
COLLECTOR
DS-2

MOTOR

LSH
0301

120 VAC

START
STOP
HS-0371

DUST COLLECTOR NO. 2

ORIGINAL SCALE IN INCHES
FOR REDUCED PLANS
0 1 2 3

REV NO	DESCRIPTION	APP'D	DATE

SEAL

AS-BUILT
1/25/02

SEAL

STATE OF TEXAS
JESSE M. CARR III
68288
REGISTERED
PROFESSIONAL ENGINEER
2-26-99

intellex CORPORATION
CONTROL SYSTEMS ENGINEERS
11230 WILCREST GREEN Houston, Texas 77042

RATNALA & BAHL, INC.
Engineers • Architects • Surveyors
11767 KATY FREEWAY, SUITE 510
HOUSTON, TEXAS 77079

CH2M HILL
7600 West Tidwell Road, Suite 400
Houston Tx 77040
713.462.0161

Binkley & Barfield, Inc.
Consulting Engineers
1710 Seamist Drive Houston, Texas 77008

ALMEDA SIMS
BIOSOLIDS
DRYER REHABILITATION

CIP NO 0298-05-3
FILE NO: 4289-4

LOGIC DIAGRAM
DRIED BIOSOLIDS CONVEYING
SHEET 9

CITY OF HOUSTON
DEPARTMENT OF PUBLIC WORKS AND ENGINEERING
ENGINEERING, CONSTRUCTION AND REAL ESTATE GROUP

SECTION APPROVALS

WATER ENGINEERING

TRAFFIC AND SIGNAL ENGINEERING

WASTEWATER ENGINEERING 2-25-99

STREET & BRIDGE ENGINEERING

STORMWATER ENGINEERING

CONSTRUCTION 3/2/99

2-25-99

OTHER DEPARTMENTS

PLANNING AND DEVELOPMENT

SPONSOR DEPARTMENT

CITY ENGINEER 3-2-99
DATE

DIRECTOR OF PUBLIC WORKS AND ENGINEERING 3/5/99
DATE

SUBMITTED:
SCALE: NONE
NONE
DATE:12/4/98
SURVEY BY:
F B NO:

DESIGNED BY: JMC
DRAWN BY: MBB
DWG. NO. : L20
SHT NO 82 of 159 SHTS

CITY DWG NO:
35001

CADD DWG FILE NO. :F:/64305/
FILE DATE--OPERATOR: 10/20/98-LTG

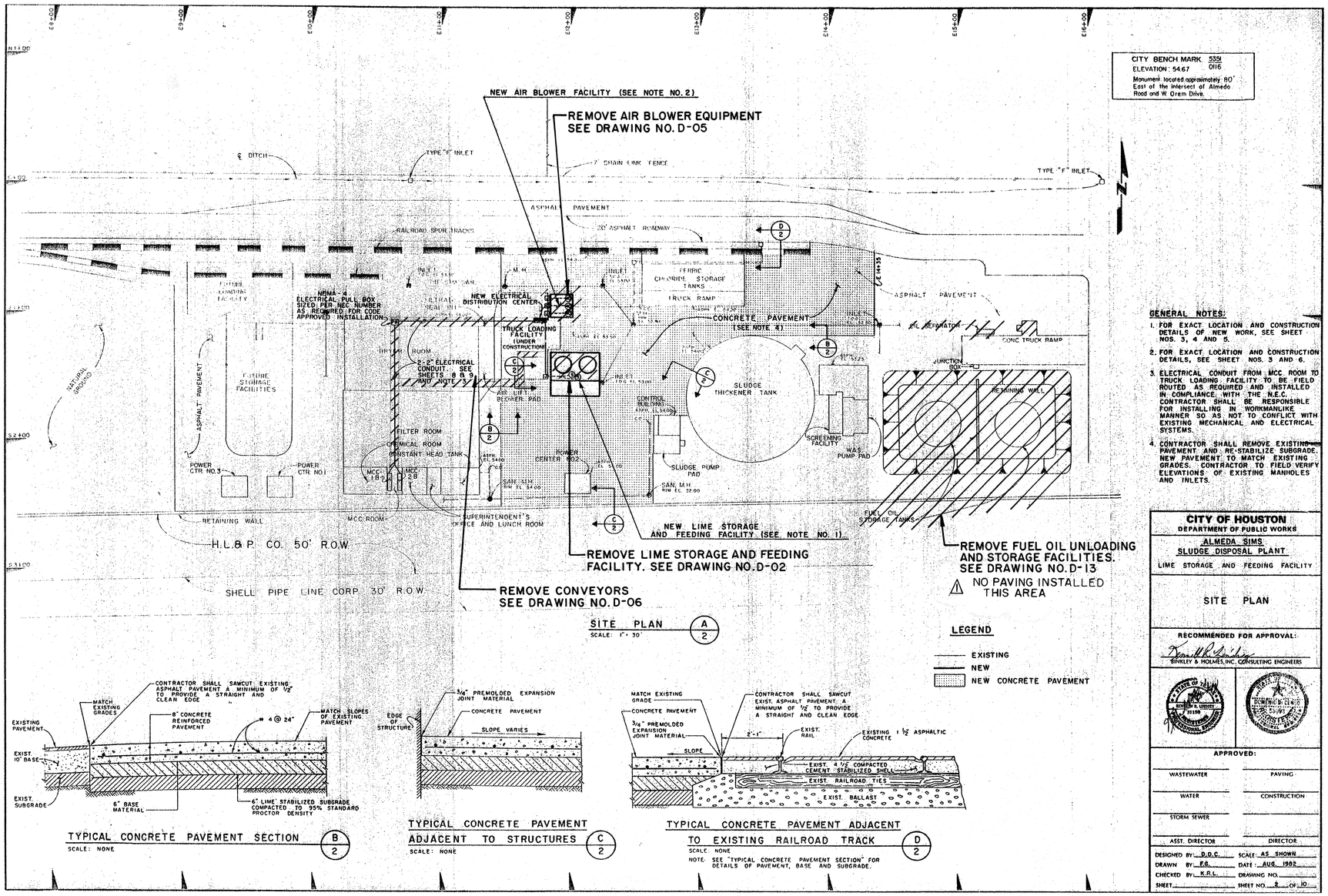

SITE PLAN (A/2)
SCALE: 1" = 30'

LEGEND

- EXISTING
- NEW
- NEW CONCRETE PAVEMENT

TYPICAL CONCRETE PAVEMENT SECTION (B/2)
SCALE: NONE

TYPICAL CONCRETE PAVEMENT ADJACENT TO STRUCTURES (C/2)
SCALE: NONE

TYPICAL CONCRETE PAVEMENT ADJACENT TO EXISTING RAILROAD TRACK (D/2)
SCALE: NONE
NOTE: SEE "TYPICAL CONCRETE PAVEMENT SECTION" FOR DETAILS OF PAVEMENT, BASE AND SUBGRADE.

GENERAL NOTES:

1. FOR EXACT LOCATION AND CONSTRUCTION DETAILS OF NEW WORK, SEE SHEET NOS. 3, 4 AND 5.
2. FOR EXACT LOCATION AND CONSTRUCTION DETAILS, SEE SHEET NOS. 5 AND 6.
3. ELECTRICAL CONDUIT FROM MCC ROOM TO TRUCK LOADING FACILITY TO BE FIELD ROUTED AS REQUIRED AND INSTALLED IN COMPLIANCE WITH THE N.E.C. CONTRACTOR SHALL BE RESPONSIBLE FOR INSTALLING IN WORKMANLIKE MANNER SO AS NOT TO CONFLICT WITH EXISTING MECHANICAL AND ELECTRICAL SYSTEMS.
4. CONTRACTOR SHALL REMOVE EXISTING PAVEMENT AND RE-STABILIZE SUBGRADE. NEW PAVEMENT TO MATCH EXISTING GRADES. CONTRACTOR TO FIELD VERIFY ELEVATIONS OF EXISTING MANHOLES AND INLETS.

NOTES:

1. ALL FACILITIES SHOWN ARE EXISTING UNLESS OTHERWISE NOTED. DATA SHOWN FOR EXISTING FACILITIES IS TAKEN FROM CITY OF HOUSTON RECORD DRAWINGS. CONTRACTOR SHALL FIELD VERIFY ALL DIMENSIONS, ELEVATIONS AND ALL OTHER DATA PRIOR TO START OF WORK AND PROMPTLY BRING DEVIATIONS TO ENGINEER'S ATTENTION.
2. DEMOLITION AND SEQUENCE OF CONSTRUCTION SHALL BE AS PER THE CONTRACT DOCUMENTS.
3. CROSS HATCHING IS USED TO INDICATE SCHEMATICALLY THE ITEMS TO BE REMOVED DURING THIS PHASE. THE CONTRACTOR SHALL LOCATE PIPING CONNECTIONS AND UTILIZE PIPING JOINTS WHERE POSSIBLE, TO INTERCEPT THE EXISTING PIPING, TO FACILITATE CONNECTION TO NEW PROCESS LINES.
4. REMOVE ALL EXPOSED REBAR AND ANCHOR BOLTS WHICH ARE TO BE REMOVED A MINIMUM OF 1-1/2 INCHES BELOW SURFACE OF REMAINING CONCRETE. FILL ALL VOIDS WITH GROUT CONTAINING A LATEX BONDING AGENT IN ACCORDANCE WITH THE SPECIFICATIONS. GROUTING OPERATIONS SHALL PRODUCE AN EVEN FINISH VERTICALLY PLUMB TO RECEIVE THE NEW FRAMING. THE GROUTING OPERATION SHALL NOT REDUCE THE SIZE OF OPENINGS.
5. CONTRACTOR SHALL PROPERLY AND THOROUGHLY CLEAN ALL CONCRETE, PIPE AND OTHER APPURTENANCES THAT SHALL REMAIN.
6. REMOVE ALL ELECTRICAL AND INSTRUMENT CONDUIT, WIRING AND CABLE, TO THE POINT OF ORIGIN ASSOCIATED WITH ALL EQUIPMENT AND INSTRUMENTATION REMOVED.
7. REMOVE ALL PIPING ASSOCIATED WITH DEMOLISHED EQUIPMENT UNLESS OTHERWISE NOTED.
8. SOME OF THE PIPING AND EQUIPMENT SHOWN TO BE DEMOLISHED HAS BEEN PREVIOUSLY REMOVED OR PARTIALLY DISMANTLED. THE CONTRACTOR SHALL REMOVE ALL REMAINING EQUIPMENT, PIPING AND CONCRETE PEDESTALS.
9. THE CONTRACTOR SHALL REMOVE ALL SURPLUS CONCRETE PEDESTALS TO A MINIMUM OF 1-1/2" BELOW THE SURFACE OF THE EXISTING FLOOR AND ALL SURFACES SHALL BE REPAIRED USING GROUT CONTAINING A LATEX BONDING AGENT IN ACCORDANCE WITH THE SPECIFICATIONS.
10. ALL UNDERGROUND FACILITIES SHOWN TO BE DEMOLISHED MAY BE FILLED, PLUGGED, AND ABANDONED IN PLACE UNLESS SPECIFICALLY NOTED TO BE REMOVED.
11. PRESERVE AND PROTECT REBAR WHERE IT IS SHOWN TO BE REUSED. DO NOT OVERCUT CORNERS OF OPENINGS. DO NOT CUT THE REBAR AS THE CONCRETE IS BEING REMOVED. USE BONDING AGENT AND PREMOLDED SELF-ADHESIVE WATERSTOP WHERE CONDITIONS REQUIRE THEIR USE.
12. ALL PIPE HANGERS MOUNTING BRACKETS ARE TO BE LEFT IN PLACE.

REV NO	DESCRIPTION	APP'D	DATE
1	AS BUILT DRAWING	DJR	12-01

SEAL — STATE OF TEXAS — DAVID J. ROSS — 68267 — REGISTERED PROFESSIONAL ENGINEER — 1/25/99

SEAL — AS-BUILT — 1/25/02

CH2M HILL
7600 West Tidwell Road, Suite 400
Houston Tx 77040
713.462.0161

Binkley & Barfield, Inc.
Consulting Engineers
1710 Seamist Drive Houston, Texas 77008

ALMEDA SIMS BIOSOLIDS DRYER REHABILITATION

CIP NO 0298-05-3
FILE NO: 4289-4

DEMOLITION SITE PLAN

CITY OF HOUSTON
DEPARTMENT OF PUBLIC WORKS
ALMEDA SIMS
SLUDGE DISPOSAL PLANT
LIME STORAGE AND FEEDING FACILITY
SITE PLAN

RECOMMENDED FOR APPROVAL:
BINKLEY & HOLMES, INC. CONSULTING ENGINEERS

APPROVED:

WASTEWATER	PAVING
WATER	CONSTRUCTION
STORM SEWER	
ASST. DIRECTOR	DIRECTOR

DESIGNED BY: D.D.C. SCALE: AS SHOWN
DRAWN BY: F.G. DATE: AUG. 1982
CHECKED BY: K.R.L. DRAWING NO.
SHEET SHEET NO. 8 OF 10

CITY OF HOUSTON
DEPARTMENT OF PUBLIC WORKS AND ENGINEERING
ENGINEERING, CONSTRUCTION AND REAL ESTATE GROUP

SECTION APPROVALS

WATER ENGINEERING	TRAFFIC AND SIGNAL ENGINEERING
WASTEWATER ENGINEERING 2-25-99	STREET & BRIDGE ENGINEERING
STORMWATER ENGINEERING	CONSTRUCTION 3/5/99
3/5/99	

OTHER DEPARTMENTS

PLANNING AND DEVELOPMENT	SPONSOR DEPARTMENT
CITY ENGINEER 3-2-99 DATE	
DIRECTOR OF PUBLIC WORKS AND ENGINEERING 3/5/99 DATE	

SUBMITTED:	DESIGNED BY: DJR
SCALE: SEE BAR SCALE	DRAWN BY: LTG
DATE:	DWG. NO. :D-01
SURVEY BY: N/A	SHT NO 83 of 159 SHTS
F B NO:	CITY DWG NO: 35001

ORIGINAL SCALE IN INCHES FOR REDUCED PLANS
0 1 2 3

CADD DWG FILE NO. :F:/64305/
FILE DATE--OPERATOR: 10/20/98--LTG

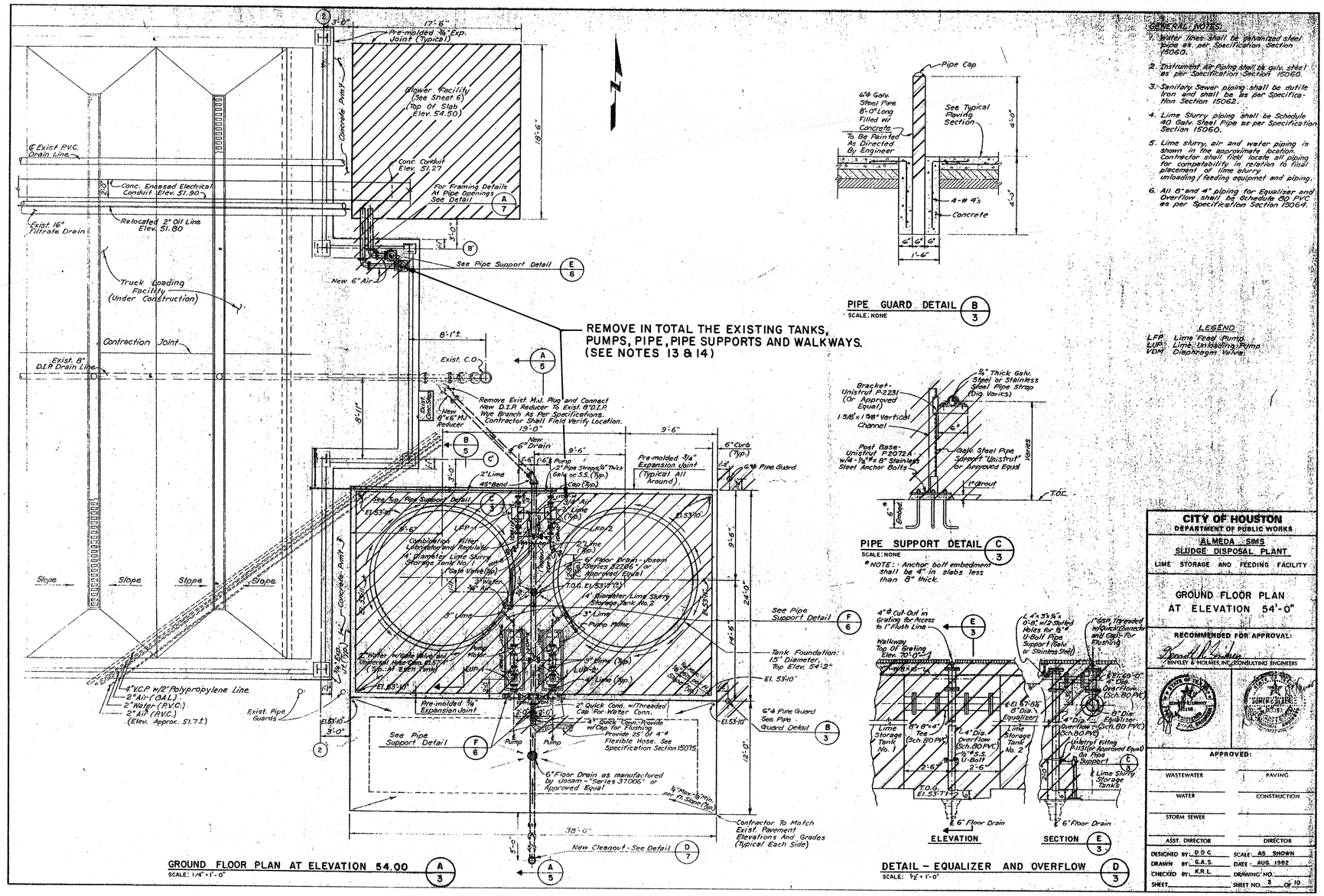

GENERAL NOTES:

1. Water lines: shall be galvanized steel pipe as per Specification Section 15060.
2. Instrument Air Piping shall be galv. steel as per Specification Section 15060.
3. Sanitary Sewer piping shall be ductile iron and shall be as per Specification Section 15062.
4. Lime Slurry piping shall be Schedule 40 Galv. Steel Pipe as per Specification Section 15060.
5. Lime slurry, air and water piping is shown in the approximate location. Contractor shall field locate all piping for compatability in relation to final placement of lime slurry unloading / feeding equipmet and piping.
6. All 8" and 4" piping for Equalizer and Overflow shall be Schedule 80 PVC as per Specification Section 15064.

LEGEND

LFP: Lime Feed Pump
LUP: Lime Unloading Pump
VDM: Diaphragm Valve

NOTES:

1. ALL FACILITIES SHOWN ARE EXISTING UNLESS OTHERWISE NOTED. DATA SHOWN FOR EXISTING FACILITIES IS TAKEN FROM CITY OF HOUSTON RECORD DRAWINGS. CONTRACTOR SHALL FIELD VERIFY ALL DIMENSIONS, ELEVATIONS AND ALL OTHER DATA PRIOR TO START OF WORK AND PROMPTLY BRING DEVIATIONS TO ENGINEER'S ATTENTION.
2. DEMOLITION AND SEQUENCE OF CONSTRUCTION SHALL BE AS PER THE CONTRACT DOCUMENTS.
3. CROSS HATCHING IS USED TO INDICATE SCHEMATICALLY THE ITEMS TO BE REMOVED DURING THIS PHASE. THE CONTRACTOR SHALL LOCATE PIPING CONNECTIONS AND UTILIZE PIPING JOINTS WHERE POSSIBLE, TO INTERCEPT THE EXISTING PIPING, TO FACILITATE CONNECTION TO NEW PROCESS LINES.
4. REMOVE ALL EXPOSED REBAR AND ANCHOR BOLTS WHICH ARE TO BE REMOVED A MINIMUM OF 1-1/2 INCHES BELOW SURFACE OF REMAINING CONCRETE. FILL ALL VOIDS WITH GROUT CONTAINING A LATEX BONDING AGENT IN ACCORDANCE WITH THE SPECIFICATIONS. GROUTING OPERATIONS SHALL PRODUCE AN EVEN FINISH VERTICALLY PLUMB TO RECEIVE THE NEW FRAMING. THE GROUTING OPERATION SHALL NOT REDUCE THE SIZE OF OPENINGS.
5. CONTRACTOR SHALL PROPERLY AND THOROUGHLY CLEAN ALL CONCRETE, PIPE AND OTHER APPURTENANCES THAT SHALL REMAIN.
6. REMOVE ALL ELECTRICAL AND INSTRUMENT CONDUIT, WIRING AND CABLE, TO THE POINT OF ORIGIN ASSOCIATED WITH ALL EQUIPMENT AND INSTRUMENTATION REMOVED.
7. REMOVE ALL PIPING ASSOCIATED WITH DEMOLISHED EQUIPMENT UNLESS OTHERWISE NOTED.
8. SOME OF THE PIPING AND EQUIPMENT SHOWN TO BE DEMOLISHED HAS BEEN PREVIOUSLY REMOVED OR PARTIALLY DISMANTLED. THE CONTRACTOR SHALL REMOVE ALL REMAINING EQUIPMENT, PIPING AND CONCRETE PEDESTALS.
9. THE CONTRACTOR SHALL REMOVE ALL SURPLUS CONCRETE PEDESTALS TO A MINIMUM OF 1-1/2" BELOW THE SURFACE OF THE EXISTING FLOOR AND ALL SURFACES SHALL BE REPAIRED USING GROUT CONTAINING A LATEX BONDING AGENT IN ACCORDANCE WITH THE SPECIFICATIONS.
10. ALL UNDERGROUND FACILITIES SHOWN TO BE DEMOLISHED MAY BE FILLED, PLUGGED, AND ABANDONED IN PLACE UNLESS SPECIFICALLY NOTED TO BE REMOVED.
11. PRESERVE AND PROTECT REBAR WHERE IT IS SHOWN TO BE REUSED. DO NOT OVERCUT CORNERS OF OPENINGS. DO NOT CUT THE REBAR AS THE CONCRETE IS BEING REMOVED. USE BONDING AGENT AND PREMOLDED SELF-ADHESIVE WATERSTOP WHERE CONDITIONS REQUIRE THEIR USE.
12. ALL PIPE HANGERS MOUNTING BRACKETS ARE TO BE LEFT IN PLACE.
13. WHERE DEMOLITION ACTIVITIES LEAVE ANY OPENING IN THE GRATING, WALKWAY OR WORK PLATFORMS LARGER THAN 3 INCHES, GRATING SHALL BE INSTALLED TO COVER THE OPENING. THE GRATING MUST MATCH THE EXISTING GRATING AND MUST NOT PRESENT A TRIP HAZARD.
14. THE BELOW GRADE DRAIN PIPES AND SURFACE INLETS SHALL REMAIN IN PLACE AND OPERATIONAL.

ORIGINAL SCALE IN INCHES FOR REDUCED PLANS
0 1 2 3

REV NO	DESCRIPTION	APP'D	DATE

SEAL
STATE OF TEXAS · DAVID L. MOSS · 66267 · REGISTERED PROFESSIONAL ENGINEER
SEAL
AS-BUILT
David L. Moss 1/25/02

CH2M HILL
7600 West Tidwell Road, Suite 400
Houston Tx 77040
713.462.0161

Binkley & Barfield, Inc.
Consulting Engineers
1710 Seamist Drive Houston, Texas 77008

CITY OF HOUSTON
DEPARTMENT OF PUBLIC WORKS
ALMEDA SIMS
SLUDGE DISPOSAL PLANT
LIME STORAGE AND FEEDING FACILITY

GROUND FLOOR PLAN AT ELEVATION 54'-0"

RECOMMENDED FOR APPROVAL:
Donald M. Binkley
BINKLEY & HOLMES, INC., CONSULTING ENGINEERS

APPROVED:

WASTEWATER	PAVING
WATER	CONSTRUCTION
STORM SEWER	
ASST. DIRECTOR	DIRECTOR

DESIGNED BY: D.D.C. SCALE: AS SHOWN
DRAWN BY: G.A.S. DATE: AUG. 1982
CHECKED BY: K.R.L. DRAWING NO.
SHEET SHEET NO. 3 OF 10

ALMEDA SIMS
BIOSOLIDS
DRYER REHABILITATION

CIP NO 0298-05-3
FILE NO: 4289-4

DEMOLITION
OF LIME TANKS

CITY OF HOUSTON
DEPARTMENT OF PUBLIC WORKS AND ENGINEERING
ENGINEERING, CONSTRUCTION AND REAL ESTATE GROUP

SECTION APPROVALS

WATER ENGINEERING	TRAFFIC AND SIGNAL ENGINEERING
Hank Jones for 2-23-99 WASTEWATER ENGINEERING	STREET & BRIDGE ENGINEERING
STORMWATER ENGINEERING	Anthony Cucci 3/4/99 CONSTRUCTION
Jim Noel ab 3/4/99	

OTHER DEPARTMENTS

PLANNING AND DEVELOPMENT	SPONSOR DEPARTMENT
Herbert D. Lunn CITY ENGINEER	3-2-99 DATE
DIRECTOR OF PUBLIC WORKS AND ENGINEERING	3/5/99 DATE

SUBMITTED:
SCALE: SEE BAR SCALE
DATE:
SURVEY BY: N/A
F B NO:

DESIGNED BY: DJR
DRAWN BY: LTG
DWG. NO. : D-02
SHT NO 84 of 159 SHTS
CITY DWG NO: 35001

CADD DWG FILE NO :F:/64305/ FILE DATE--OPERATOR- 10/20/98--LG

REMOVE IN TOTAL THE EXISTING 24" WET CAKE CONVEYOR, 24" MIXING CONVEYOR AND 26" BELT CONVEYOR INCLUDING ALL MOTORS AND ASSOCIATED DRAIN LINES. (SEE NOTE 13)

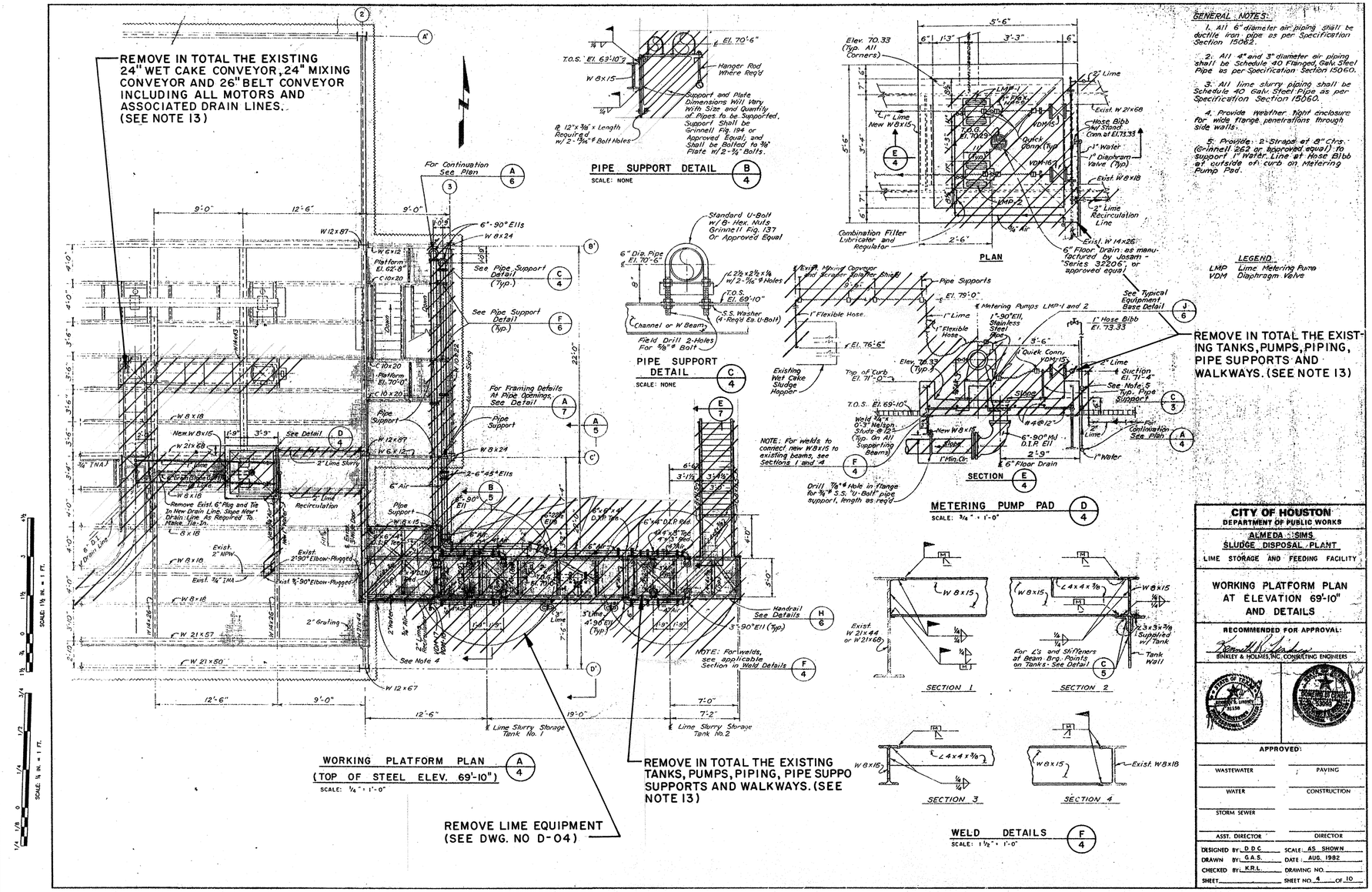

WORKING PLATFORM PLAN (TOP OF STEEL ELEV. 69'-10") A/4
SCALE: ¼" = 1'-0"

PIPE SUPPORT DETAIL B/4
SCALE: NONE

PIPE SUPPORT DETAIL C/4
SCALE: NONE

PLAN

SECTION E/4

METERING PUMP PAD D/4
SCALE: ¾" = 1'-0"

WELD DETAILS F/4
SCALE: 1½" = 1'-0"

REMOVE IN TOTAL THE EXISTING TANKS, PUMPS, PIPING, PIPE SUPPORTS AND WALKWAYS. (SEE NOTE 13)

REMOVE IN TOTAL THE EXISTING TANKS, PUMPS, PIPING, PIPE SUPPO SUPPORTS AND WALKWAYS. (SEE NOTE 13)

REMOVE LIME EQUIPMENT (SEE DWG. NO D-04)

GENERAL NOTES:

1. All 6" diameter air piping shall be ductile iron pipe as per Specification Section 15062.
2. All 4" and 3" diameter air piping shall be Schedule 40 Flanged, Galv. Steel Pipe as per Specification Section 15060.
3. All lime slurry piping shall be Schedule 40 Galv. Steel Pipe as per Specification Section 15060.
4. Provide weather tight enclosure for wide flange penetrations through side walls.
5. Provide 2 Straps at 8" Ctrs. (Grinnell 259 or approved equal) to support 1" Water Line at Hose Bibb at outside of curb on Metering Pump Pad.

LEGEND

LMP Lime Metering Pump
VDM Diaphragm Valve

NOTES:

1. ALL FACILITIES SHOWN ARE EXISTING UNLESS OTHERWISE NOTED. DATA SHOWN FOR EXISTING FACILITIES IS TAKEN FROM CITY OF HOUSTON RECORD DRAWINGS. CONTRACTOR SHALL FIELD VERIFY ALL DIMENSIONS, ELEVATIONS AND ALL OTHER DATA PRIOR TO START OF WORK AND PROMPTLY BRING DEVIATIONS TO ENGINEER'S ATTENTION.
2. DEMOLITION AND SEQUENCE OF CONSTRUCTION SHALL BE AS PER THE CONTRACT DOCUMENTS.
3. CROSS HATCHING IS USED TO INDICATE SCHEMATICALLY THE ITEMS TO BE REMOVED DURING THIS PHASE. THE CONTRACTOR SHALL LOCATE PIPING CONNECTIONS AND UTILIZE PIPING JOINTS WHERE POSSIBLE, TO INTERCEPT THE EXISTING PIPING, TO FACILITATE CONNECTION TO NEW PROCESS LINES.
4. REMOVE ALL EXPOSED REBAR AND ANCHOR BOLTS WHICH ARE TO BE REMOVED A MINIMUM OF 1-1/2 INCHES BELOW SURFACE OF REMAINING CONCRETE. FILL ALL VOIDS WITH GROUT CONTAINING A LATEX BONDING AGENT IN ACCORDANCE WITH THE SPECIFICATIONS. GROUTING OPERATIONS SHALL PRODUCE AN EVEN FINISH VERTICALLY PLUMB TO RECEIVE THE NEW FRAMING. THE GROUTING OPERATION SHALL NOT REDUCE THE SIZE OF OPENINGS.
5. CONTRACTOR SHALL PROPERLY AND THOROUGHLY CLEAN ALL CONCRETE, PIPE AND OTHER APPURTENANCES THAT SHALL REMAIN.
6. REMOVE ALL ELECTRICAL AND INSTRUMENT CONDUIT, WIRING AND CABLE, TO THE POINT OF ORIGIN ASSOCIATED WITH ALL EQUIPMENT AND INSTRUMENTATION REMOVED.
7. REMOVE ALL PIPING ASSOCIATED WITH DEMOLISHED EQUIPMENT UNLESS OTHERWISE NOTED.
8. SOME OF THE PIPING AND EQUIPMENT SHOWN TO BE DEMOLISHED HAS BEEN PREVIOUSLY REMOVED OR PARTIALLY DISMANTLED. THE CONTRACTOR SHALL REMOVE ALL REMAINING EQUIPMENT, PIPING AND CONCRETE PEDESTALS.
9. THE CONTRACTOR SHALL REMOVE ALL SURPLUS CONCRETE PEDESTALS TO A MINIMUM OF 1-1/2" BELOW THE SURFACE OF THE EXISTING FLOOR AND ALL SURFACES SHALL BE REPAIRED USING GROUT CONTAINING A LATEX BONDING AGENT IN ACCORDANCE WITH THE SPECIFICATIONS.
10. ALL UNDERGROUND FACILITIES SHOWN TO BE DEMOLISHED MAY BE FILLED, PLUGGED, AND ABANDONED IN PLACE UNLESS SPECIFICALLY NOTED TO BE REMOVED.
11. PRESERVE AND PROTECT REBAR WHERE IT IS SHOWN TO BE REUSED. DO NOT OVERCUT CORNERS OF OPENINGS. DO NOT CUT THE REBAR AS THE CONCRETE IS BEING REMOVED. USE BONDING AGENT AND PREMOLDED SELF-ADHESIVE WATERSTOP WHERE CONDITIONS REQUIRE THEIR USE.
12. ALL PIPE HANGERS MOUNTING BRACKETS ARE TO BE LEFT IN PLACE.
13. WHERE DEMOLITION ACTIVITIES LEAVE ANY OPENING IN THE GRATING, WALKWAY OR WORK PLATFORMS LARGER THAN 3 INCHES, GRATING SHALL BE INSTALLED TO COVER THE OPENING. THE GRATING MUST MATCH THE EXISTING GRATING AND MUST NOT PRESENT A TRIP HAZARD. GRATING IS GENERALLY 1-1/2" X 1/4" X 1-3/16" GALVANIZED, SERRATED GRATING.

ORIGINAL SCALE IN INCHES FOR REDUCED PLANS

REV NO	DESCRIPTION	APP'D	DATE

SEAL — STATE OF TEXAS — DAVID L. ROSS — 68267 — REGISTERED PROFESSIONAL ENGINEER — 1/21/99

SEAL — AS-BUILT — 1/25/02

CH2M HILL
7600 West Tidwell Road, Suite 400
Houston Tx 77040
713.462.0161

Binkley & Barfield, Inc.
Consulting Engineers
1710 Seamist Drive Houston, Texas 77008

ALMEDA SIMS BIOSOLIDS DRYER REHABILITATION

CIP NO 0298-05-3
FILE NO: 4289-4

DEMOLITION OF LIME TANKS WORKING PLATFORMS AND CONVEYORS

CITY OF HOUSTON
DEPARTMENT OF PUBLIC WORKS AND ENGINEERING
ENGINEERING, CONSTRUCTION AND REAL ESTATE GROUP

SECTION APPROVALS

WATER ENGINEERING — TRAFFIC AND SIGNAL ENGINEERING
WASTEWATER ENGINEERING 2-25-99 — STREET & BRIDGE ENGINEERING
STORMWATER ENGINEERING — CONSTRUCTION 3/5/99
2/25/99

OTHER DEPARTMENTS

PLANNING AND DEVELOPMENT — SPONSOR DEPARTMENT
CITY ENGINEER 3-2-99 DATE
DIRECTOR OF PUBLIC WORKS AND ENGINEERING 3/5/99 DATE

SUBMITTED:
SCALE: SEE BAR SCALE
DATE:
SURVEY BY: N/A
F B NO:

DESIGNED BY: DJR
DRAWN BY: LTG
DWG. NO. : D-03
SHT NO 85 of 159 SHTS

CITY DWG NO: 35001

CITY OF HOUSTON
DEPARTMENT OF PUBLIC WORKS
ALMEDA SIMS SLUDGE DISPOSAL PLANT
LIME STORAGE AND FEEDING FACILITY

WORKING PLATFORM PLAN AT ELEVATION 69'-10" AND DETAILS

RECOMMENDED FOR APPROVAL:
BINKLEY & HOLMES, INC. CONSULTING ENGINEERS

APPROVED:
WASTEWATER — PAVING
WATER — CONSTRUCTION
STORM SEWER
ASST. DIRECTOR — DIRECTOR

DESIGNED BY D D C — SCALE: AS SHOWN
DRAWN BY G A S — DATE: AUG. 1982
CHECKED BY K R L — DRAWING NO.
SHEET — SHEET NO. 4 OF 10

CADD DWG FILE NO. : F:/64305/
FILE DATE--OPERATOR: 10/20/98--LTG

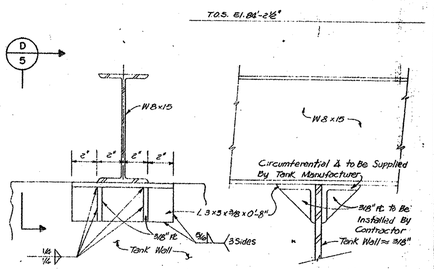

ELEVATION

SECTION D/5

DETAIL C/5
SCALE: 3" = 1'-0"

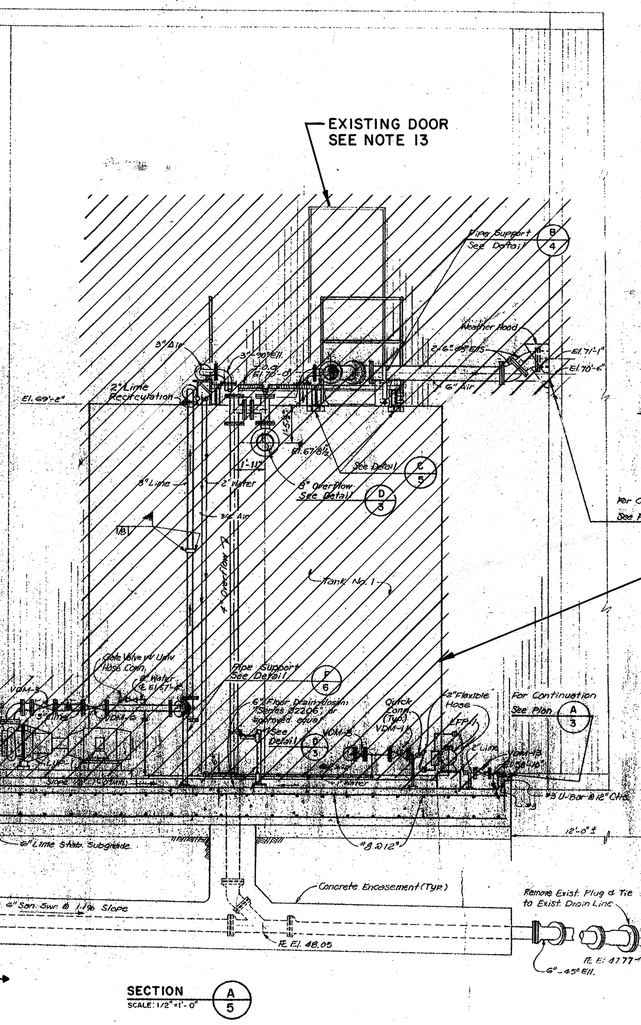

SECTION A/5
SCALE: 1/2" = 1'-0"

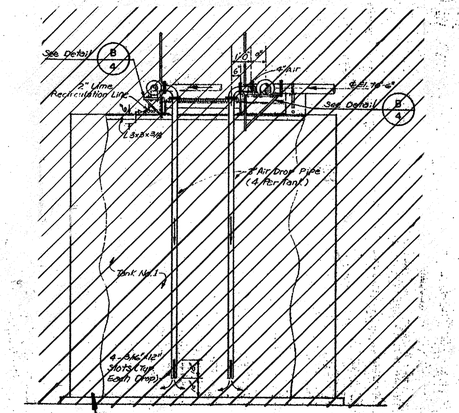

SECTION B/5
SCALE: 3/8" = 1'-0"

REMOVE THE EXISTING TANKS, PUMPS, PIPING, PIPE SUPPORTS AND WALKWAYS. DRAIN AND INLET TO REMAIN IN SERVICE.

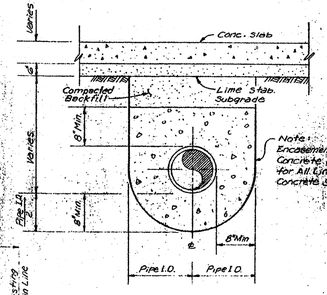

CONCRETE ENCASEMENT DETAIL E/5
SCALE: NONE

CITY OF HOUSTON
DEPARTMENT OF PUBLIC WORKS
ALMEDA SIMS
SLUDGE DISPOSAL PLANT
LIME STORAGE AND FEEDING FACILITY

MECHANICAL / STRUCTURAL SECTIONS AND DETAILS

RECOMMENDED FOR APPROVAL:
BINKLEY & BARFIELD, INC. CONSULTING ENGINEERS

APPROVED:

WASTEWATER	PAVING
WATER	CONSTRUCTION
STORM SEWER	
ASST. DIRECTOR	DIRECTOR

DESIGNED BY: DDC — SCALE: AS SHOWN
DRAWN BY: WWS — DATE: AUG. 1982
CHECKED BY: K.R.L. — DRAWING NO.
SHEET — SHEET NO. 6 OF 10

NOTES:

1. ALL FACILITIES SHOWN ARE EXISTING UNLESS OTHERWISE NOTED. DATA SHOWN FOR EXISTING FACILITIES IS TAKEN FROM CITY OF HOUSTON RECORD DRAWINGS. CONTRACTOR SHALL FIELD VERIFY ALL DIMENSIONS, ELEVATIONS AND ALL OTHER DATA PRIOR TO START OF WORK AND PROMPTLY BRING DEVIATIONS TO ENGINEER'S ATTENTION.
2. DEMOLITION AND SEQUENCE OF CONSTRUCTION SHALL BE AS PER THE CONTRACT DOCUMENTS.
3. CROSS HATCHING IS USED TO INDICATE SCHEMATICALLY THE ITEMS TO BE REMOVED DURING THIS PHASE. THE CONTRACTOR SHALL LOCATE PIPING CONNECTIONS AND UTILIZE PIPING JOINTS WHERE POSSIBLE, TO INTERCEPT THE EXISTING PIPING, TO FACILITATE CONNECTION TO NEW PROCESS LINES.
4. REMOVE ALL EXPOSED REBAR AND ANCHOR BOLTS WHICH ARE TO BE REMOVED A MINIMUM OF 1-1/2 INCHES BELOW SURFACE OF REMAINING CONCRETE. FILL ALL VOIDS WITH GROUT CONTAINING A LATEX BONDING AGENT IN ACCORDANCE WITH THE SPECIFICATIONS. GROUTING OPERATIONS SHALL PRODUCE AN EVEN FINISH VERTICALLY PLUMB TO RECEIVE THE NEW FRAMING. THE GROUTING OPERATION SHALL NOT REDUCE THE SIZE OF OPENINGS.
5. CONTRACTOR SHALL PROPERLY AND THOROUGHLY CLEAN ALL CONCRETE, PIPE AND OTHER APPURTENANCES THAT SHALL REMAIN.
6. REMOVE ALL ELECTRICAL AND INSTRUMENT CONDUIT, WIRING AND CABLE, TO THE POINT OF ORIGIN ASSOCIATED WITH ALL EQUIPMENT AND INSTRUMENTATION REMOVED.
7. REMOVE ALL PIPING ASSOCIATED WITH DEMOLISHED EQUIPMENT UNLESS OTHERWISE NOTED.
8. SOME OF THE PIPING AND EQUIPMENT SHOWN TO BE DEMOLISHED HAS BEEN PREVIOUSLY REMOVED OR PARTIALLY DISMANTLED. THE CONTRACTOR SHALL REMOVE ALL REMAINING EQUIPMENT, PIPING AND CONCRETE PEDESTALS.
9. THE CONTRACTOR SHALL REMOVE ALL SURPLUS CONCRETE PEDESTALS TO A MINIMUM OF 1-1/2" BELOW THE SURFACE OF THE EXISTING FLOOR AND ALL SURFACES SHALL BE REPAIRED USING GROUT CONTAINING A LATEX BONDING AGENT IN ACCORDANCE WITH THE SPECIFICATIONS.
10. ALL UNDERGROUND FACILITIES SHOWN TO BE DEMOLISHED MAY BE FILLED, PLUGGED, AND ABANDONED IN PLACE UNLESS SPECIFICALLY NOTED TO BE REMOVED.
11. PRESERVE AND PROTECT REBAR WHERE IT IS SHOWN TO BE REUSED. DO NOT OVERCUT CORNERS OF OPENINGS. DO NOT CUT THE REBAR AS THE CONCRETE IS BEING REMOVED. USE BONDING AGENT AND PREMOLDED SELF-ADHESIVE WATERSTOP WHERE CONDITIONS REQUIRE THEIR USE.
12. ALL PIPE HANGERS MOUNTING BRACKETS ARE TO BE LEFT IN PLACE.
13. WELD EXISTING DOOR SHUT WITH SPACERS TO FILL GAP AND 3" LONG BEAD NEAR STRIKER. REPAINT THE ENTIRE DOOR AND FRAME AFTER WELDING.
14. REMOVE ALL TANK PADS, EQUIPMENT PADS AND CURBS. MATCH ELEVATIONS WITH THE ADJACENT PAVEMENT.
15. THE BELOW GRADE DRAIN PIPES AND SURFACE INLETS SHALL REMAIN IN PLACE AND OPERATIONAL.

ORIGINAL SCALE IN INCHES FOR REDUCED PLANS

REV NO	DESCRIPTION	APP'D	DATE

SEAL — STATE OF TEXAS — DAVID J. ROSS — 68567 — REGISTERED PROFESSIONAL ENGINEER — 1/22/99

SEAL — AS-BUILT — 1/25/02

CH2M HILL
7600 West Tidwell Road, Suite 400
Houston Tx 77040
713.462.0161

Binkley & Barfield, Inc.
Consulting Engineers
1710 Seamist Drive Houston, Texas 77008

ALMEDA SIMS
BIOSOLIDS
DRYER REHABILITATION

CIP NO 0298-05-3
FILE NO: 4289-4

DEMOLITION OF LIME TANKS

CITY OF HOUSTON
DEPARTMENT OF PUBLIC WORKS AND ENGINEERING
ENGINEERING, CONSTRUCTION AND REAL ESTATE GROUP

SECTION APPROVALS

WATER ENGINEERING	TRAFFIC AND SIGNAL ENGINEERING
WASTEWATER ENGINEERING — 2-25-99	STREET & BRIDGE ENGINEERING
STORMWATER ENGINEERING	CONSTRUCTION — 3/2/99
3/2/99	

OTHER DEPARTMENTS

PLANNING AND DEVELOPMENT	SPONSOR DEPARTMENT
CITY ENGINEER — 3-2-99 DATE	
DIRECTOR OF PUBLIC WORKS AND ENGINEERING — 3/5/99 DATE	

SUBMITTED:	DESIGNED BY: DJR
SCALE: SEE BAR SCALE	DRAWN BY: LTG
DATE:	DWG. NO. : D-04
SURVEY BY: N/A	SHT NO 86 of 159 SHTS
F B NO:	CITY DWG NO: 35001

CADD DWG FILE NO :F:/64305/ FILE DATE-OPERATOR: 10/20/98-LTG

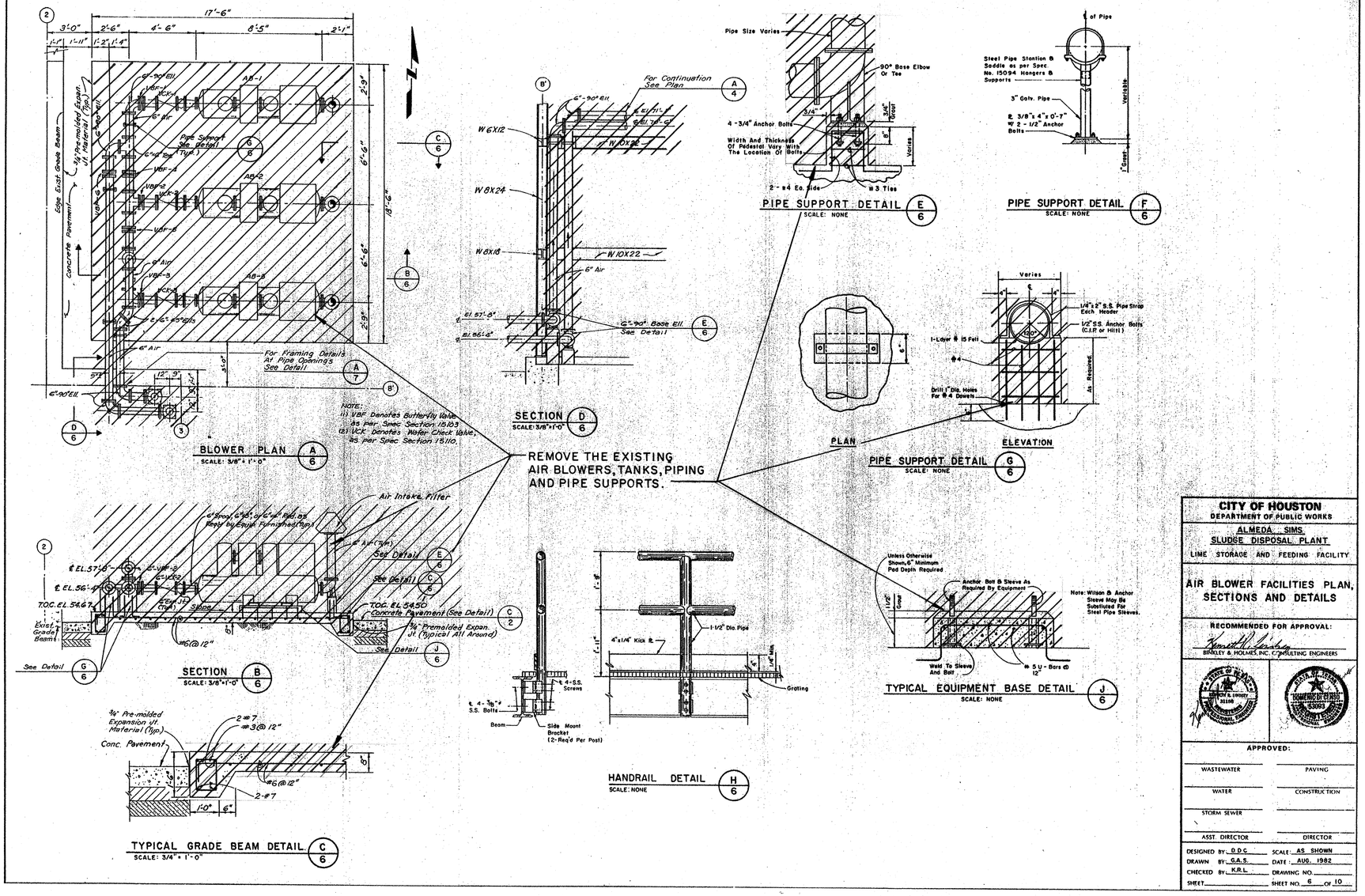

NOTES:

1. ALL FACILITIES SHOWN ARE EXISTING UNLESS OTHERWISE NOTED. DATA SHOWN FOR EXISTING FACILITIES IS TAKEN FROM CITY OF HOUSTON RECORD DRAWINGS. CONTRACTOR SHALL FIELD VERIFY ALL DIMENSIONS, ELEVATIONS AND ALL OTHER DATA PRIOR TO START OF WORK AND PROMPTLY BRING DEVIATIONS TO ENGINEER'S ATTENTION.
2. DEMOLITION AND SEQUENCE OF CONSTRUCTION SHALL BE AS PER THE CONTRACT DOCUMENTS.
3. CROSS HATCHING IS USED TO INDICATE SCHEMATICALLY THE ITEMS TO BE REMOVED DURING THIS PHASE. THE CONTRACTOR SHALL LOCATE PIPING CONNECTIONS AND UTILIZE PIPING JOINTS WHERE POSSIBLE, TO INTERCEPT THE EXISTING PIPING, TO FACILITATE CONNECTION TO NEW PROCESS LINES.
4. REMOVE ALL EXPOSED REBAR AND ANCHOR BOLTS WHICH ARE TO BE REMOVED A MINIMUM OF 1-1/2 INCHES BELOW SURFACE OF REMAINING CONCRETE. FILL ALL VOIDS WITH GROUT CONTAINING A LATEX BONDING AGENT IN ACCORDANCE WITH THE SPECIFICATIONS. GROUTING OPERATIONS SHALL PRODUCE AN EVEN FINISH VERTICALLY PLUMB TO RECEIVE THE NEW FRAMING. THE GROUTING OPERATION SHALL NOT REDUCE THE SIZE OF OPENINGS.
5. CONTRACTOR SHALL PROPERLY AND THOROUGHLY CLEAN ALL CONCRETE, PIPE AND OTHER APPURTENANCES THAT SHALL REMAIN.
6. REMOVE ALL ELECTRICAL AND INSTRUMENT CONDUIT, WIRING AND CABLE, TO THE POINT OF ORIGIN ASSOCIATED WITH ALL EQUIPMENT AND INSTRUMENTATION REMOVED.
7. REMOVE ALL PIPING ASSOCIATED WITH DEMOLISHED EQUIPMENT UNLESS OTHERWISE NOTED.
8. SOME OF THE PIPING AND EQUIPMENT SHOWN TO BE DEMOLISHED HAS BEEN PREVIOUSLY REMOVED OR PARTIALLY DISMANTLED. THE CONTRACTOR SHALL REMOVE ALL REMAINING EQUIPMENT, PIPING AND CONCRETE PEDESTALS.
9. THE CONTRACTOR SHALL REMOVE ALL SURPLUS CONCRETE PEDESTALS TO A MINIMUM OF 1-1/2" BELOW THE SURFACE OF THE EXISTING FLOOR AND ALL SURFACES SHALL BE REPAIRED USING GROUT CONTAINING A LATEX BONDING AGENT IN ACCORDANCE WITH THE SPECIFICATIONS.
10. ALL UNDERGROUND FACILITIES SHOWN TO BE DEMOLISHED MAY BE FILLED, PLUGGED, AND ABANDONED IN PLACE UNLESS SPECIFICALLY NOTED TO BE REMOVED.
11. PRESERVE AND PROTECT REBAR WHERE IT IS SHOWN TO BE REUSED. DO NOT OVERCUT CORNERS OF OPENINGS. DO NOT CUT THE REBAR AS THE CONCRETE IS BEING REMOVED. USE BONDING AGENT AND PREMOLDED SELF-ADHESIVE WATERSTOP WHERE CONDITIONS REQUIRE THEIR USE.
12. ALL PIPE HANGERS MOUNTING BRACKETS ARE TO BE LEFT IN PLACE.
13. REMOVE EQUIPMENT AND CRACK ALL CONCRETE TO PIECES SMALLER THAT 3 FT ACROSS. REMOVE PORTION WITHIN 2FT OF FINISH GRADE. BACKFILL AND COMPACT SOIL TO 95% STANDARD PROCTOR IN CONTAINMENT AREA. PAVE WITH CONCRETE AND BASE MATERIAL AS SHOWN IN SECTION B/D-01 WITH 3/4" DOWELS AT 24" SPACING INTO EXISTING CONCRETE.
14. REMOVE ALL TANK PADS, EQUIPMENT PADS AND CURBS. MATCH ELEVATIONS WITH THE ADJACENT PAVEMENT.

CITY OF HOUSTON
DEPARTMENT OF PUBLIC WORKS

ALMEDA SIMS
SLUDGE DISPOSAL PLANT
LIME STORAGE AND FEEDING FACILITY

AIR BLOWER FACILITIES PLAN, SECTIONS AND DETAILS

RECOMMENDED FOR APPROVAL:
BINKLEY & HOLMES, P.C. CONSULTING ENGINEERS

APPROVED:

WASTEWATER	PAVING
WATER	CONSTRUCTION
STORM SEWER	
ASST. DIRECTOR	DIRECTOR

DESIGNED BY D.D.C. SCALE: AS SHOWN
DRAWN BY G.A.S. DATE: AUG. 1982
CHECKED BY K.R.L. DRAWING NO.
SHEET SHEET NO. 6 OF 10

REV NO	DESCRIPTION	APP'D	DATE

SEAL — STATE OF TEXAS — DAVID J. ROSS — 68257 — REGISTERED PROFESSIONAL ENGINEER — 4/21/99

SEAL — AS BUILT — 1/25/02

CH2M HILL
7600 West Tidwell Road, Suite 400
Houston Tx 77040
713.462.0161

Binkley & Barfield, Inc.
Consulting Engineers
1710 Seamist Drive Houston, Texas 77008

ALMEDA SIMS
BIOSOLIDS
DRYER REHABILITATION

CIP NO 0298-05-3
FILE NO: 4289-4

DEMOLITION
OF AIR BLOWER FACILITIES

CITY OF HOUSTON
DEPARTMENT OF PUBLIC WORKS AND ENGINEERING
ENGINEERING, CONSTRUCTION AND REAL ESTATE GROUP

SECTION APPROVALS

WATER ENGINEERING — TRAFFIC AND SIGNAL ENGINEERING
WASTEWATER ENGINEERING — STREET & BRIDGE ENGINEERING
STORMWATER ENGINEERING — CONSTRUCTION
3/2/99

OTHER DEPARTMENTS

PLANNING AND DEVELOPMENT — SPONSOR DEPARTMENT

CITY ENGINEER — DATE 3-2-99
DIRECTOR OF PUBLIC WORKS AND ENGINEERING — DATE 3/3/99

SUBMITTED:
SCALE: SEE BAR SCALE
DATE:
SURVEY BY: N/A
F B NO:

DESIGNED BY: DJR
DRAWN BY: LTG
DWG. NO. : D-05
SHT NO 87 of 159 SHTS
CITY DWG NO: 35001

ORIGINAL SCALE IN INCHES FOR REDUCED PLANS
0 1/8 3/4 1 1 1/2 2 2 1/2 3

CADD DWG FILE NO :F:/64305/
FILE DATE—OPERATOR:

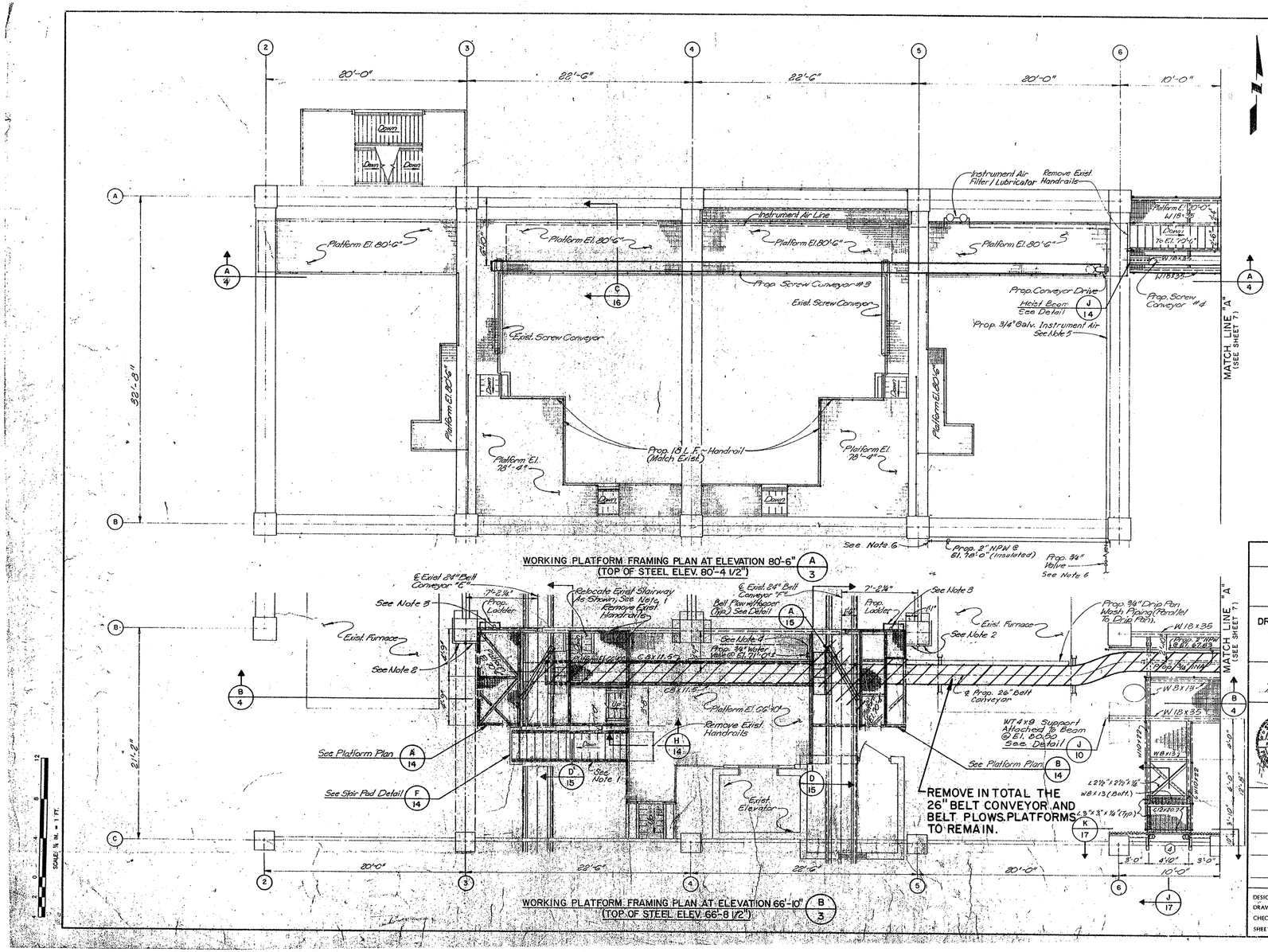

Notes:

1. Remove And Relocate Stairs As Shown, Modify Platform Handrails As Required And Construct New Concrete Stair Pad.
2. Relocate Plant Air Hose Connection @ El. 70'-0" To Exist. Side Of Col. B-5.An1 To West Side Of Col. B-3
3. Relocate Exist. Flush Button Control Stations As They Do Not Interfere With Prop. Ladders.
4. Connect Prop. 3/4"ø Galv. Pipe To Exist. Non-Potable Water Line @ El. 64'-0"± for Drip Pan Wash System.
5. Connect Prop. 3/4" Galv. Instrument Air Line To Exist. Instrument Air Line @ Col. C-6
6. Connect Prop. 2"ø Water Line To Exist. Non-Potable Water Line @ Col. B-5.
7. The Contractor shall field verify locations, dimensions and elevations of existing structures that affect work under this contract.
8. Water Lines shall be provided with insulation.

CITY OF HOUSTON
DEPARTMENT OF PUBLIC WORKS

ALMEDA SIMS
SLUDGE DISPOSAL PLANT
TRUCK LOADING FACILITY

DRYER ROOM MODIFICATIONS
PLAN AT ELEV. 80'-6"
PLAN AT ELEV. 66'-10"

RECOMMENDED FOR APPROVAL:
BINKLEY & HOLMES, INC. CONSULTING ENGINEERS

APPROVED:

WASTEWATER	PAVING
WATER	CONSTRUCTION
STORM SEWER	
ASST. DIRECTOR	DIRECTOR

DESIGNED BY: J.A.J. SCALE: 1/4"=1'-0"
DRAWN BY: D.R. DATE: JULY 1981
CHECKED BY: K.R.L. DRAWING NO.
SHEET SHEET NO. 3 OF 23

NOTES:

1. ALL FACILITIES SHOWN ARE EXISTING UNLESS OTHERWISE NOTED. DATA SHOWN FOR EXISTING FACILITIES IS TAKEN FROM CITY OF HOUSTON RECORD DRAWINGS. CONTRACTOR SHALL FIELD VERIFY ALL DIMENSIONS, ELEVATIONS AND ALL OTHER DATA PRIOR TO START OF WORK AND PROMPTLY BRING DEVIATIONS TO ENGINEER'S ATTENTION.
2. DEMOLITION AND SEQUENCE OF CONSTRUCTION SHALL BE AS PER THE CONTRACT DOCUMENTS.
3. CROSS HATCHING IS USED TO INDICATE SCHEMATICALLY THE ITEMS TO BE REMOVED DURING THIS PHASE. THE CONTRACTOR SHALL LOCATE PIPING CONNECTIONS AND UTILIZE PIPING JOINTS WHERE POSSIBLE TO INTERCEPT THE EXISTING PIPING TO FACILITATE CONNECTION TO NEW PROCESS LINES.
4. REMOVE ALL EXPOSED REBAR AND ANCHOR BOLTS WHICH ARE TO BE REMOVED A MINIMUM OF 1-1/2 INCHES BELOW SURFACE OF REMAINING CONCRETE. FILL ALL VOIDS WITH GROUT CONTAINING A LATEX BONDING AGENT IN ACCORDANCE WITH THE SPECIFICATIONS. GROUTING OPERATIONS SHALL PRODUCE AN EVEN FINISH VERTICALLY PLUMB TO RECEIVE THE NEW FRAMING. THE GROUTING OPERATION SHALL NOT REDUCE THE SIZE OF OPENINGS.
5. CONTRACTOR SHALL PROPERLY AND THOROUGHLY CLEAN ALL CONCRETE, PIPE AND OTHER APPURTENANCES THAT SHALL REMAIN.
6. REMOVE ALL ELECTRICAL AND INSTRUMENT CONDUIT, WIRING AND CABLE, TO THE POINT OF ORIGIN ASSOCIATED WITH ALL EQUIPMENT AND INSTRUMENTATION REMOVED.
7. REMOVE ALL PIPING ASSOCIATED WITH DEMOLISHED EQUIPMENT UNLESS OTHERWISE NOTED.
8. SOME OF THE PIPING AND EQUIPMENT SHOWN TO BE DEMOLISHED HAS BEEN PREVIOUSLY REMOVED OR PARTIALLY DISMANTLED. THE CONTRACTOR SHALL REMOVE ALL REMAINING EQUIPMENT, PIPING AND CONCRETE PEDESTALS.
9. THE CONTRACTOR SHALL REMOVE ALL SURPLUS CONCRETE PEDESTALS TO A MINIMUM OF 1-1/2" BELOW THE SURFACE OF THE EXISTING FLOOR AND ALL SURFACES SHALL BE REPAIRED USING GROUT CONTAINING A LATEX BONDING AGENT IN ACCORDANCE WITH THE SPECIFICATIONS. UNDERGROUND FACILITIES SHOWN TO BE DEMOLISHED MAY BE FILLED, PLUGGED, AND ABANDONED IN PLACE OR REMOVED FORM THE SITE UNLESS SPECIFICALLY NOTED TO BE REMOVED.
10. ALL UNDERGROUND FACILITIES SHOWN TO BE DEMOLISHED MAY BE FILLED, PLUGGED, AND ABANDONED IN PLACE UNLESS SPECIFICALLY NOTED TO BE REMOVED.
11. PRESERVE AND PROTECT REBAR WHERE IT IS SHOWN TO BE REUSED. DO NOT OVERCUT CORNERS OF OPENINGS. DO NOT CUT THE REBAR AS THE CONCRETE IS BEING REMOVED. USE BONDING AGENT AND PREMOLDED SELF-ADHESIVE WATERSTOP WHERE CONDITIONS REQUIRE THEIR USE.
12. ALL PIPE HANGERS MOUNTING BRACKETS ARE TO BE LEFT IN PLACE.
13. WHERE DEMOLITION ACTIVITIES LEAVE ANY OPENING IN THE GRATING, WALWAY OR WORK PLATFORMS LARGER THAT 3 INCHES, GRATING SHALL BE INSTALLED TO COVER THE OPENING. THE GRATING MUST MATCH THE EXISTING GRATING AND MUST NOT PRESENT A TRIP HAZARD.

ORIGINAL SCALE IN INCHES FOR REDUCED PLANS
0 1 2 3

REV NO	DESCRIPTION	APP'D	DATE

SEAL — STATE OF TEXAS — DAVID J. ROSS — 68267 — REGISTERED PROFESSIONAL ENGINEER

SEAL — AS-BUILT 1/25/02

CH2M HILL
7600 West Tidwell Road, Suite 400
Houston Tx 77040
713.462.0161

Binkley & Barfield, Inc.
Consulting Engineers
1710 Seamist Drive Houston, Texas 77008

ALMEDA SIMS
BIOSOLIDS
DRYER REHABILITATION

CIP NO 0298-05-3
FILE NO: 4289-4

DEMOLITION OF CONVEYORS

CITY OF HOUSTON
DEPARTMENT OF PUBLIC WORKS AND ENGINEERING
ENGINEERING, CONSTRUCTION AND REAL ESTATE GROUP

SECTION APPROVALS

WATER ENGINEERING	TRAFFIC AND SIGNAL ENGINEERING
WASTEWATER ENGINEERING 2-25-99	STREET & BRIDGE ENGINEERING
STORMWATER ENGINEERING	CONSTRUCTION 3/2/99
3/2/99	

OTHER DEPARTMENTS

PLANNING AND DEVELOPMENT	SPONSOR DEPARTMENT

CITY ENGINEER — DATE 3-2-99
DIRECTOR OF PUBLIC WORKS AND ENGINEERING — DATE 3/10/99

SUBMITTED:	DESIGNED BY: DJR
SCALE: SEE BAR SCALE	DRAWN BY: LTG
DATE:	DWG. NO. : D-06
SURVEY BY: N/A	SHT NO 88 of 159 SHTS
F B NO:	CITY DWG NO: 35001

CADD DWG FILE NO :F:/64305/
FILE DATE-OPERATOR: 10/20/98-LTG

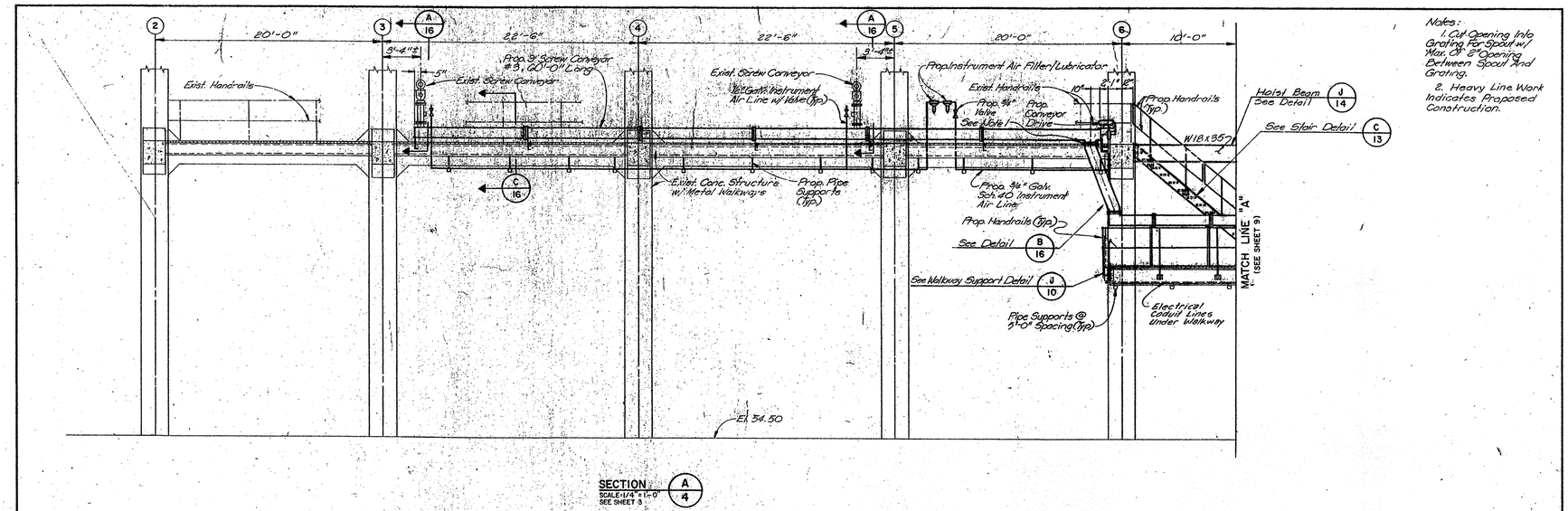

SECTION A/4
SCALE: 1/4" = 1'-0"
SEE SHEET 3

Notes:
1. Cut Opening Into Grating For Spout w/ Max. 3" ø Opening Between Spout And Grating.
2. Heavy Line Work Indicates Proposed Construction.

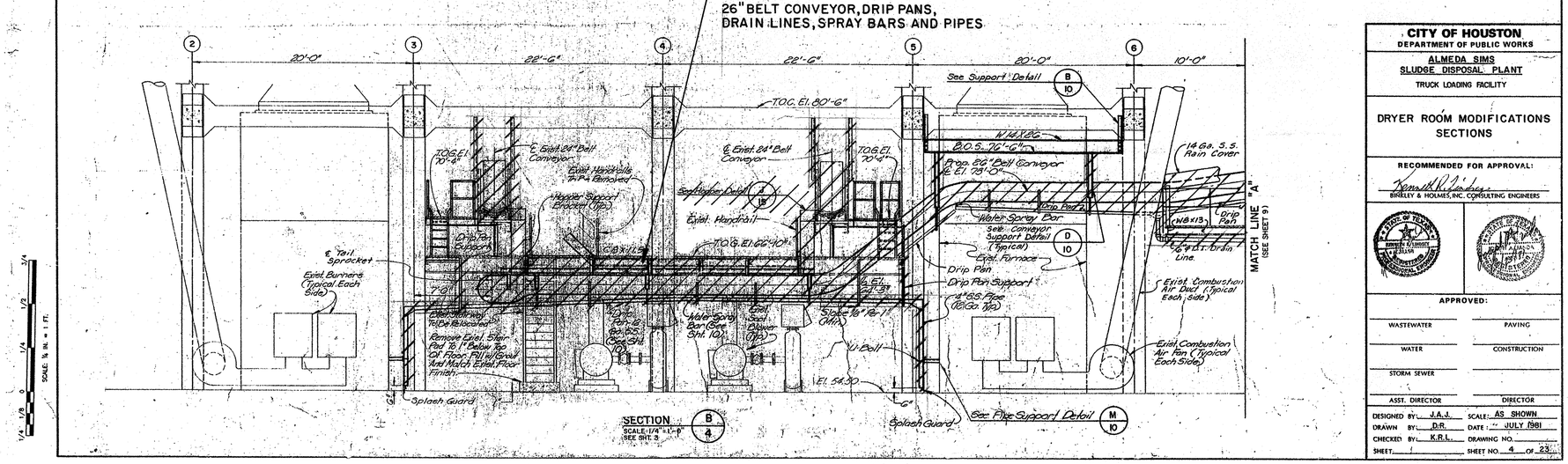

SECTION B/4
SCALE: 1/4" = 1'-0"
SEE SHT. 3

ORIGINAL SCALE IN INCHES FOR REDUCED PLANS
0 1/8 1/4 1/2 3/4 1 2 3
SCALE: ½ IN. = 1 FT.

NOTES:

1. ALL FACILITIES SHOWN ARE EXISTING UNLESS OTHERWISE NOTED. DATA SHOWN FOR EXISTING FACILITIES IS TAKEN FROM CITY OF HOUSTON RECORD DRAWINGS. CONTRACTOR SHALL FIELD VERIFY ALL DIMENSIONS, ELEVATIONS AND ALL OTHER DATA PRIOR TO START OF WORK AND PROMPTLY BRING DEVIATIONS TO ENGINEER'S ATTENTION.
2. DEMOLITION AND SEQUENCE OF CONSTRUCTION SHALL BE AS PER THE CONTRACT DOCUMENTS.
3. CROSS HATCHING IS USED TO INDICATE SCHEMATICALLY THE ITEMS TO BE REMOVED DURING THIS PHASE. THE CONTRACTOR SHALL LOCATE PIPING CONNECTIONS AND UTILIZE PIPING JOINTS WHERE POSSIBLE, TO INTERCEPT THE EXISTING PIPING, TO FACILITATE CONNECTION TO NEW PROCESS LINES.
4. REMOVE ALL EXPOSED REBAR AND ANCHOR BOLTS WHICH ARE TO BE REMOVED A MINIMUM OF 1-1/2 INCHES BELOW SURFACE OF REMAINING CONCRETE. FILL ALL VOIDS WITH GROUT CONTAINING A LATEX BONDING AGENT IN ACCORDANCE WITH THE SPECIFICATIONS. GROUTING OPERATIONS SHALL PRODUCE AN EVEN FINISH VERTICALLY PLUMB TO RECEIVE THE NEW FRAMING. THE GROUTING OPERATION SHALL NOT REDUCE THE SIZE OF OPENINGS.
5. CONTRACTOR SHALL PROPERLY AND THOROUGHLY CLEAN ALL CONCRETE, PIPE AND OTHER APPURTENANCES THAT SHALL REMAIN.
6. REMOVE ALL ELECTRICAL AND INSTRUMENT CONDUIT, WIRING AND CABLE, TO THE POINT OF ORIGIN ASSOCIATED WITH ALL EQUIPMENT AND INSTRUMENTATION REMOVED.
7. REMOVE ALL PIPING ASSOCIATED WITH DEMOLISHED EQUIPMENT UNLESS OTHERWISE NOTED.
8. SOME OF THE PIPING AND EQUIPMENT SHOWN TO BE DEMOLISHED HAS BEEN PREVIOUSLY REMOVED OR PARTIALLY DISMANTLED. THE CONTRACTOR SHALL REMOVE ALL REMAINING EQUIPMENT, PIPING AND CONCRETE PEDESTALS.
9. THE CONTRACTOR SHALL REMOVE ALL SURPLUS CONCRETE PEDESTALS TO A MINIMUM OF 1-1/2" BELOW THE SURFACE OF THE EXISTING FLOOR AND ALL SURFACES SHALL BE REPAIRED USING GROUT CONTAINING A LATEX BONDING AGENT IN ACCORDANCE WITH THE SPECIFICATIONS.
10. ALL UNDERGROUND FACILITIES SHOWN TO BE DEMOLISHED MAY BE FILLED, PLUGGED, AND ABANDONED IN PLACE UNLESS SPECIFICALLY NOTED TO BE REMOVED.
11. PRESERVE AND PROTECT REBAR WHERE IT IS SHOWN TO BE REUSED. DO NOT OVERCUT CORNERS OF OPENINGS. DO NOT CUT THE REBAR AS THE CONCRETE IS BEING REMOVED. USE BONDING AGENT AND PREMOLDED SELF-ADHESIVE WATERSTOP WHERE CONDITIONS REQUIRE THEIR USE.
12. ALL PIPE HANGERS MOUNTING BRACKETS ARE TO BE LEFT IN PLACE.
13. WHERE DEMOLITION ACTIVITES LEAVE ANY OPENING IN THE GRATING, WALKWAY OR WORK PLATFORMS LARGER THAN 3 INCHES, GRATING SHALL BE INSTALLED TO COVER THE OPENING, THE GRATING MUST MATCH THE EXISTING GRATING AND MUST NOT PRESENT A TRIP HAZARD.

CITY OF HOUSTON
DEPARTMENT OF PUBLIC WORKS

ALMEDA SIMS
SLUDGE DISPOSAL PLANT
TRUCK LOADING FACILITY

DRYER ROOM MODIFICATIONS
SECTIONS

RECOMMENDED FOR APPROVAL:
Kenneth R. Holmes
BINKLEY & HOLMES, INC. CONSULTING ENGINEERS

APPROVED:

WASTEWATER	PAVING
WATER	CONSTRUCTION
STORM SEWER	
ASST. DIRECTOR	DIRECTOR

DESIGNED BY: J.A.J. SCALE: AS SHOWN
DRAWN BY: D.R. DATE: JULY 1981
CHECKED BY: K.R.L. DRAWING NO.
SHEET SHEET NO. 4 OF 23

REV NO	DESCRIPTION	APP'D	DATE

SEAL — STATE OF TEXAS — DAVID J. ROSS — 58267 — REGISTERED PROFESSIONAL ENGINEER — 1/21/99

SEAL — AS-BUILT — 1/25/02

CH2M HILL
7600 West Tidwell Road, Suite 400
Houston Tx 77040
713.462.0161

Binkley & Barfield, Inc.
Consulting Engineers
1710 Seamist Drive Houston, Texas 77008

ALMEDA SIMS
BIOSOLIDS
DRYER REHABILITATION

CIP NO 0298-05-3
FILE NO: 4289-4

DEMOLITION OF DRYER ROOM CONVEYORS

CITY OF HOUSTON
DEPARTMENT OF PUBLIC WORKS AND ENGINEERING
ENGINEERING, CONSTRUCTION AND REAL ESTATE GROUP

SECTION APPROVALS

WATER ENGINEERING — TRAFFIC AND SIGNAL ENGINEERING

WASTEWATER ENGINEERING 2-25-99 — STREET & BRIDGE ENGINEERING

STORMWATER ENGINEERING — CONSTRUCTION 3/2/99

2/26/99

OTHER DEPARTMENTS

PLANNING AND DEVELOPMENT — SPONSOR DEPARTMENT

CITY ENGINEER 3-2-99 DATE

DIRECTOR OF PUBLIC WORKS AND ENGINEERING 2/25/99 DATE

SUBMITTED:	DESIGNED BY: DJR
SCALE: SEE BAR SCALE	DRAWN BY: LTG
DATE:	DWG. NO. :D-07
SURVEY BY: N/A	SHT NO 89 of 159 SHTS
F B NO:	CITY DWG NO: 35001

CADD DWG FILE NO. :F:/64305/
FILE DATE--OPERATOR: 10/20/98--LTG

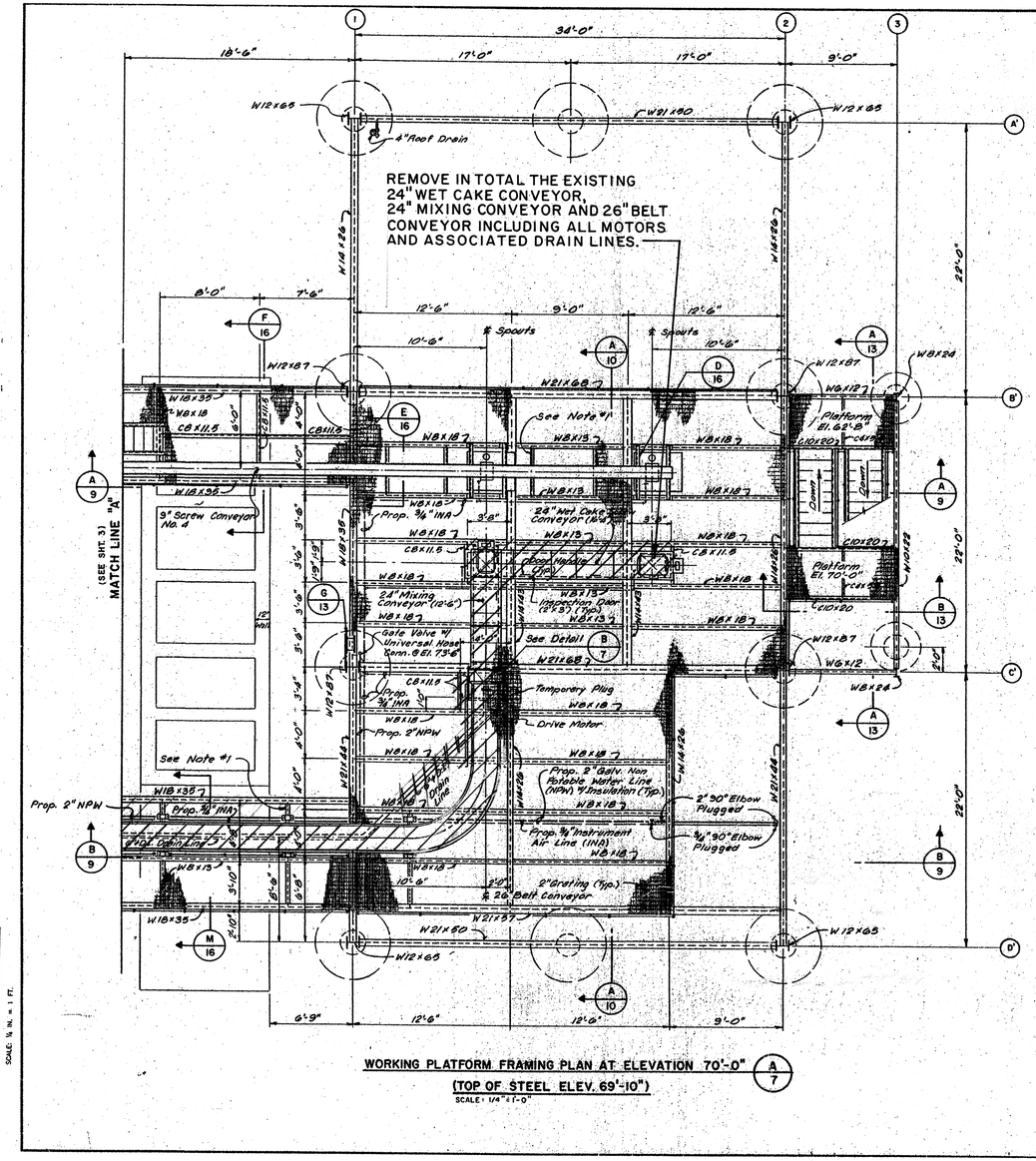

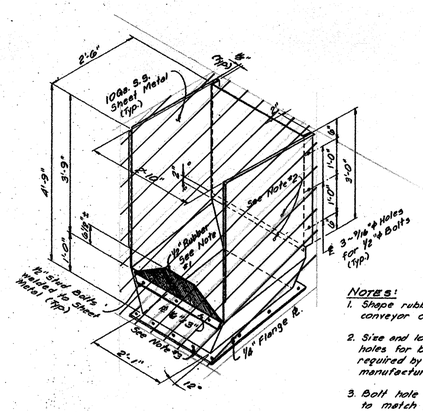

SCRAPER SPLATTER SHIELD DETAIL (B/7)
SCALE: NONE

GENERAL NOTES:

1. Location of conveyor support members as required by equipment furnished.
2. Hot dip galvanize structural steel after fabrication unless noted otherwise.

NOTES:

1. Shape rubber to belt conveyor configuration.
2. Size and location of bolt holes for belt scraper as required by conveyor manufacturer.
3. Bolt hole size and location to match mixing conveyor.

CITY OF HOUSTON
DEPARTMENT OF PUBLIC WORKS

ALMEDA SIMS
SLUDGE DISPOSAL PLANT
TRUCK LOADING FACILITY

LOADING STRUCTURE
PLAN ELEV. 70'-0"

RECOMMENDED FOR APPROVAL:
Kenneth R. Lindley
BINKLEY & HOLMES, INC. CONSULTING ENGINEERS

APPROVED:

WASTEWATER	PAVING
WATER	CONSTRUCTION
STORM SEWER	
ASST. DIRECTOR	DIRECTOR

DESIGNED BY: J.A.J. SCALE: AS SHOWN
DRAWN BY: B.J.L. DATE: JULY 1981
CHECKED BY: K.R.L. DRAWING NO.
SHEET SHEET NO. 7 OF 23

NOTES:

1. ALL FACILITIES SHOWN ARE EXISTING UNLESS OTHERWISE NOTED. DATA SHOWN FOR EXISTING FACILITIES IS TAKEN FROM CITY OF HOUSTON RECORD DRAWINGS. CONTRACTOR SHALL FIELD VERIFY ALL DIMENSIONS, ELEVATIONS AND ALL OTHER DATA PRIOR TO START OF WORK AND PROMPTLY BRING DEVIATIONS TO ENGINEER'S ATTENTION.
2. DEMOLITION AND SEQUENCE OF CONSTRUCTION SHALL BE AS PER THE CONTRACT DOCUMENTS.
3. CROSS HATCHING IS USED TO INDICATE SCHEMATICALLY THE ITEMS TO BE REMOVED DURING THIS PHASE. THE CONTRACTOR SHALL LOCATE PIPING CONNECTIONS AND UTILIZE PIPING JOINTS WHERE POSSIBLE, TO INTERCEPT THE EXISTING PIPING, TO FACILITATE CONNECTION TO NEW PROCESS LINES.
4. REMOVE ALL EXPOSED REBAR AND ANCHOR BOLTS WHICH ARE TO BE REMOVED A MINIMUM OF 1-1/2 INCHES BELOW SURFACE OF REMAINING CONCRETE. FILL ALL VOIDS WITH GROUT CONTAINING A LATEX BONDING AGENT IN ACCORDANCE WITH THE SPECIFICATIONS. GROUTING OPERATIONS SHALL PRODUCE AN EVEN FINISH VERTICALLY PLUMB TO RECEIVE THE NEW FRAMING. THE GROUTING OPERATION SHALL NOT REDUCE THE SIZE OF OPENINGS.
5. CONTRACTOR SHALL PROPERLY AND THOROUGHLY CLEAN ALL CONCRETE, PIPE AND OTHER APPURTENANCES THAT SHALL REMAIN.
6. REMOVE ALL ELECTRICAL AND INSTRUMENT CONDUIT, WIRING AND CABLE, TO THE POINT OF ORIGIN ASSOCIATED WITH ALL EQUIPMENT AND INSTRUMENTATION REMOVED.
7. REMOVE ALL PIPING ASSOCIATED WITH DEMOLISHED EQUIPMENT UNLESS OTHERWISE NOTED.
8. SOME OF THE PIPING AND EQUIPMENT SHOWN TO BE DEMOLISHED HAS BEEN PREVIOUSLY REMOVED OR PARTIALLY DISMANTLED. THE CONTRACTOR SHALL REMOVE ALL REMAINING EQUIPMENT, PIPING AND CONCRETE PEDESTALS.
9. THE CONTRACTOR SHALL REMOVE ALL SURPLUS CONCRETE PEDESTALS TO A MINIMUM OF 1-1/2" BELOW THE SURFACE OF THE EXISTING FLOOR AND ALL SURFACES SHALL BE REPAIRED USING GROUT CONTAINING A LATEX BONDING AGENT IN ACCORDANCE WITH THE SPECIFICATIONS.
10. ALL UNDERGROUND FACILITIES SHOWN TO BE DEMOLISHED MAY BE FILLED, PLUGGED, AND ABANDONED IN PLACE UNLESS SPECIFICALLY NOTED TO BE REMOVED.
11. PRESERVE AND PROTECT REBAR WHERE IT IS SHOWN TO BE REUSED. DO NOT OVERCUT CORNERS OF OPENINGS. DO NOT CUT THE REBAR AS THE CONCRETE IS BEING REMOVED. USE BONDING AGENT AND PREMOLDED SELF-ADHESIVE WATERSTOP WHERE CONDITIONS REQUIRE THEIR USE.
12. ALL PIPE HANGERS MOUNTING BRACKETS ARE TO BE LEFT IN PLACE.
13. WHERE DEMOLITION ACTIVITIES LEAVE ANY OPENING IN THE GRATING, WALKWAY OR WORK PLATFORMS LARGER THAN 3 INCHES, GRATING SHALL BE INSTALLED TO COVER THE OPENING. THE GRATING MUST MATCH THE EXISTING GRATING AND MUST NOT PRESENT A TRIP HAZARD.

REV NO	DESCRIPTION	APP'D	DATE

SEAL — STATE OF TEXAS — DAVID J. ROSS — 69867 — REGISTERED PROFESSIONAL ENGINEER — 1/21/99

SEAL — AS-BUILT — 1/25/02

CH2M HILL
7600 West Tidwell Road, Suite 400
Houston Tx 77040
713.462.0161

Binkley & Barfield, Inc.
Consulting Engineers
1710 Seamist Drive Houston, Texas 77008

ALMEDA SIMS
BIOSOLIDS
DRYER REHABILITATION

CIP NO 0298-05-3
FILE NO: 4289-4

DEMOLITION OF CONVEYORS IN LOADING BUILDING

CITY OF HOUSTON
DEPARTMENT OF PUBLIC WORKS AND ENGINEERING
ENGINEERING, CONSTRUCTION AND REAL ESTATE GROUP

SECTION APPROVALS

WATER ENGINEERING	TRAFFIC AND SIGNAL ENGINEERING
WASTEWATER ENGINEERING — 2-22-99	STREET & BRIDGE ENGINEERING
STORMWATER ENGINEERING	CONSTRUCTION — 3/1/99
2/25/99	

OTHER DEPARTMENTS

PLANNING AND DEVELOPMENT	SPONSOR DEPARTMENT
CITY ENGINEER — 3-2-99	DATE
DIRECTOR OF PUBLIC WORKS AND ENGINEERING — 3/15/99	DATE

SUBMITTED:	DESIGNED BY: DJR
SCALE: SEE BAR SCALE	DRAWN BY: LTG
DATE:	DWG. NO. : D-08
SURVEY BY: N/A	SHT NO 90 of 159 SHTS
F B NO:	CITY DWG NO: 35001

ORIGINAL SCALE IN INCHES FOR REDUCED PLANS
0 1 2 3

CADD DWG FILE NO F:/64305/
FILE DATE--OPERATOR: 10/20/98--STG

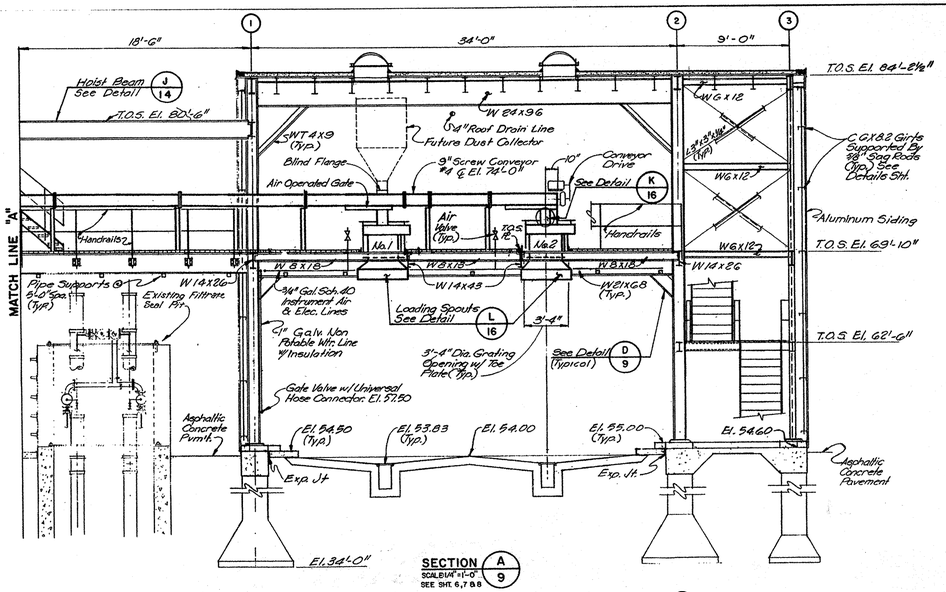

SECTION A / 9
SCALE: 1/4"=1'-0"
SEE SHT. 6, 7 & 8

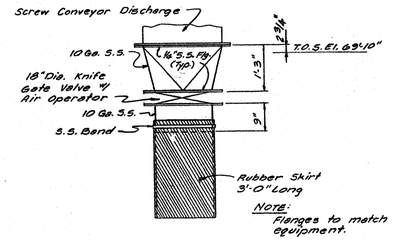

WET CAKE DISCHARGE SPOUT DETAIL C / 9
SCALE: 3/4"=1'-0"
(2 - REQUIRED)

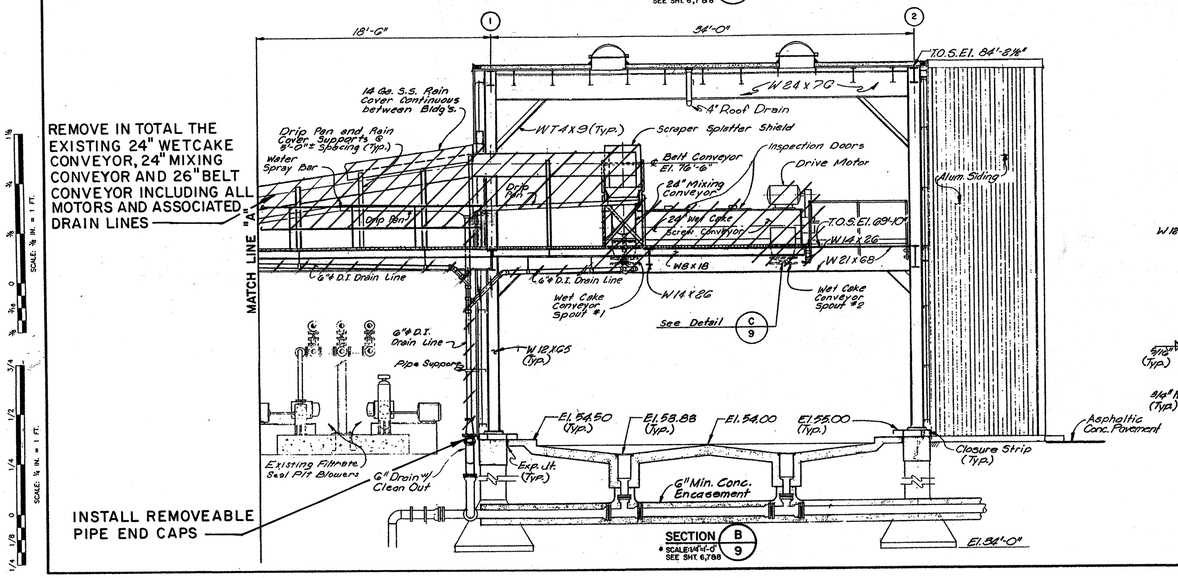

SECTION B / 9
SCALE: 1/4"=1'-0"
SEE SHT. 6, 7 & 8

REMOVE IN TOTAL THE EXISTING 24" WETCAKE CONVEYOR, 24" MIXING CONVEYOR AND 26" BELT CONVEYOR INCLUDING ALL MOTORS AND ASSOCIATED DRAIN LINES

INSTALL REMOVEABLE PIPE END CAPS

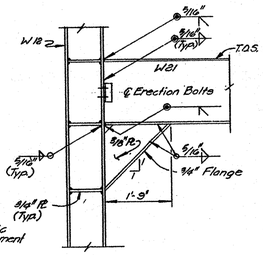

DETAIL D / 9
SCALE: 3/4"=1'-0"

NOTES:

1. ALL FACILITIES SHOWN ARE EXISTING UNLESS OTHERWISE NOTED. DATA SHOWN FOR EXISTING FACILITIES IS TAKEN FROM CITY OF HOUSTON RECORD DRAWINGS. CONTRACTOR SHALL FIELD VERIFY ALL DIMENSIONS, ELEVATIONS AND ALL OTHER DATA PRIOR TO START OF WORK AND PROMPTLY BRING DEVIATIONS TO ENGINEER'S ATTENTION.
2. DEMOLITION AND SEQUENCE OF CONSTRUCTION SHALL BE AS PER THE CONTRACT DOCUMENTS.
3. CROSS HATCHING IS USED TO INDICATE SCHEMATICALLY THE ITEMS TO BE REMOVED DURING THIS PHASE. THE CONTRACTOR SHALL LOCATE PIPING CONNECTIONS AND UTILIZE PIPING JOINTS WHERE POSSIBLE, TO INTERCEPT THE EXISTING PIPING, TO FACILITATE CONNECTION TO NEW PROCESS LINES.
4. REMOVE ALL EXPOSED REBAR AND ANCHOR BOLTS WHICH ARE TO BE REMOVED A MINIMUM OF 1-1/2 INCHES BELOW SURFACE OF REMAINING CONCRETE. FILL ALL VOIDS WITH GROUT CONTAINING A LATEX BONDING AGENT IN ACCORDANCE WITH THE SPECIFICATIONS. GROUTING OPERATIONS SHALL PRODUCE AN EVEN FINISH VERTICALLY PLUMB TO RECEIVE THE NEW FRAMING. THE GROUTING OPERATION SHALL NOT REDUCE THE SIZE OF OPENINGS.
5. CONTRACTOR SHALL PROPERLY AND THOROUGHLY CLEAN ALL CONCRETE, PIPE AND OTHER APPURTENANCES THAT SHALL REMAIN.
6. REMOVE ALL ELECTRICAL AND INSTRUMENT CONDUIT, WIRING AND CABLE, TO THE POINT OF ORIGIN ASSOCIATED WITH ALL EQUIPMENT AND INSTRUMENTATION REMOVED.
7. REMOVE ALL PIPING ASSOCIATED WITH DEMOLISHED EQUIPMENT UNLESS OTHERWISE NOTED.
8. SOME OF THE PIPING AND EQUIPMENT SHOWN TO BE DEMOLISHED HAS BEEN PREVIOUSLY REMOVED OR PARTIALLY DISMANTLED. THE CONTRACTOR SHALL REMOVE ALL REMAINING EQUIPMENT, PIPING AND CONCRETE PEDESTALS.
9. THE CONTRACTOR SHALL REMOVE ALL SURPLUS CONCRETE PEDESTALS TO A MINIMUM OF 1-1/2" BELOW THE SURFACE OF THE EXISTING FLOOR AND ALL SURFACES SHALL BE REPAIRED USING GROUT CONTAINING A LATEX BONDING AGENT IN ACCORDANCE WITH THE SPECIFICATIONS.
10. ALL UNDERGROUND FACILITIES SHOWN TO BE DEMOLISHED MAY BE FILLED, PLUGGED, AND ABANDONED IN PLACE UNLESS SPECIFICALLY NOTED TO BE REMOVED.
11. PRESERVE AND PROTECT REBAR WHERE IT IS SHOWN TO BE REUSED. DO NOT OVERCUT CORNERS OF OPENINGS. DO NOT CUT THE REBAR AS THE CONCRETE IS BEING REMOVED. USE BONDING AGENT AND PREMOLDED SELF-ADHESIVE WATERSTOP WHERE CONDITIONS REQUIRE THEIR USE.
12. ALL PIPE HANGERS MOUNTING BRACKETS ARE TO BE LEFT IN PLACE.
13. WHERE DEMOLITION ACTIVITIES LEAVE ANY OPENING IN THE GRATING, WALKWAY OR WORK PLATFORMS LARGER THAN 3 INCHES, GRATING SHALL BE INSTALLED TO COVER THE OPENING. THE GRATING MUST MATCH THE EXISTING GRATING AND MUST NOT PRESENT A TRIP HAZARD.

CITY OF HOUSTON
DEPARTMENT OF PUBLIC WORKS

ALMEDA SIMS
SLUDGE DISPOSAL PLANT
TRUCK LOADING FACILITY

LOADING STRUCTURE SECTIONS

RECOMMENDED FOR APPROVAL:
BINKLEY & HOLMES, INC. CONSULTING ENGINEERS

APPROVED:

WASTEWATER	PAVING
WATER	CONSTRUCTION
STORM SEWER	
ASST. DIRECTOR	DIRECTOR

DESIGNED BY: J.A.J. SCALE: AS SHOWN
DRAWN BY: J.W.B & D.R. DATE: JULY 1981
CHECKED BY: K.R.L. DRAWING NO.
SHEET SHEET NO. 9 OF 23

REV NO	DESCRIPTION	APP'D	DATE

SEAL — STATE OF TEXAS — DAVID J. ROSS — 69267 — REGISTERED PROFESSIONAL ENGINEER — 1/21/99

SEAL — AS-BUILT — 1/25/02

CH2M HILL
7600 West Tidwell Road, Suite 400
Houston Tx 77040
713.462.0161

Binkley & Barfield, Inc.
Consulting Engineers
1710 Seamist Drive Houston, Texas 77008

ALMEDA SIMS
BIOSOLIDS
DRYER REHABILITATION

CIP NO 0298-05-3
FILE NO: 4289-4

DEMOLITION OF CONVEYORS IN LOADING BUILDING SECTIONS

CITY OF HOUSTON
DEPARTMENT OF PUBLIC WORKS AND ENGINEERING
ENGINEERING, CONSTRUCTION AND REAL ESTATE GROUP

SECTION APPROVALS

WATER ENGINEERING — TRAFFIC AND SIGNAL ENGINEERING

WASTEWATER ENGINEERING 2-25-99 — STREET & BRIDGE ENGINEERING

STORMWATER ENGINEERING — CONSTRUCTION 3/1/99

2/25/99

OTHER DEPARTMENTS

PLANNING AND DEVELOPMENT — SPONSOR DEPARTMENT

CITY ENGINEER 3-2-99 DATE

DIRECTOR OF PUBLIC WORKS AND ENGINEERING 3/5/99 DATE

SUBMITTED:
SCALE: SEE BAR SCALE
DATE:
SURVEY BY: N/A
F B NO:

DESIGNED BY: DJR
DRAWN BY: LTG
DWG. NO. : D-09
SHT NO 91 of 159 SHTS

CITY DWG NO: 35001

ORIGINAL SCALE IN INCHES FOR REDUCED PLANS
0 1/8 1/4 1/2 3/4 1 2 3
SCALE: ½ IN. = 1 FT.
SCALE: ¾ IN. = 1 FT.

CADD DWG FILE NO : F:/64305/
FILE DATE--OPERATOR: 10/20/98--LTG

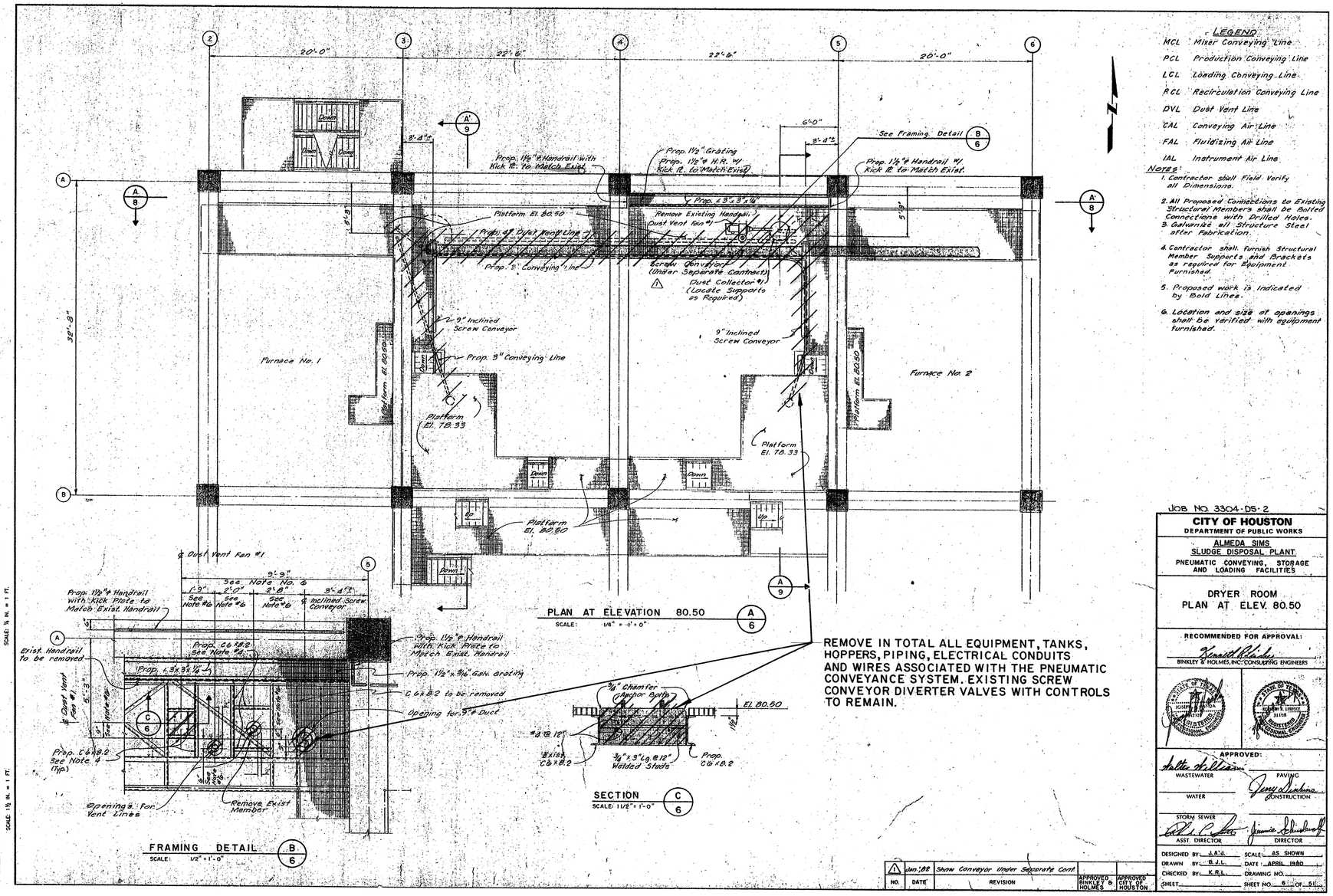

REMOVE IN TOTAL ALL EQUIPMENT, TANKS, HOPPERS, PIPING, ELECTRICAL CONDUITS AND WIRES ASSOCIATED WITH THE PNEUMATIC CONVEYANCE SYSTEM. EXISTING SCREW CONVEYOR DIVERTER VALVES WITH CONTROLS TO REMAIN.

LEGEND

MCL	Mixer Conveying Line
PCL	Production Conveying Line
LCL	Loading Conveying Line
RCL	Recirculation Conveying Line
DVL	Dust Vent Line
CAL	Conveying Air Line
FAL	Fluidizing Air Line
IAL	Instrument Air Line

Notes:
1. Contractor shall Field Verify all Dimensions.
2. All Proposed Connections to Existing Structural Members shall be Bolted Connections with Drilled Holes.
3. Galvanize all Structure Steel after Fabrication.
4. Contractor shall furnish Structural Member Supports and Brackets as required for Equipment Furnished.
5. Proposed work is indicated by Bold Lines.
6. Location and size of openings shall be verified with equipment furnished.

JOB NO. 3304-DS-2

CITY OF HOUSTON
DEPARTMENT OF PUBLIC WORKS

ALMEDA SIMS
SLUDGE DISPOSAL PLANT
PNEUMATIC CONVEYING, STORAGE AND LOADING FACILITIES

DRYER ROOM
PLAN AT ELEV. 80.50

RECOMMENDED FOR APPROVAL:
BINKLEY & HOLMES, INC. CONSULTING ENGINEERS

APPROVED:
WASTEWATER
PAVING
WATER
CONSTRUCTION
STORM SEWER
ASST. DIRECTOR
DIRECTOR

DESIGNED BY: J.A.J. SCALE: AS SHOWN
DRAWN BY: B.J.L. DATE: APRIL 1980
CHECKED BY: K.R.L. DRAWING NO.
SHEET SHEET NO. 6 OF 51

NO.	DATE	REVISION	APPROVED BINKLEY & HOLMES	APPROVED CITY OF HOUSTON
1	Jan '98	Show Conveyor Under Separate Cont		

NOTES:

1. ALL FACILITIES SHOWN ARE EXISTING UNLESS OTHERWISE NOTED. DATA SHOWN FOR EXISTING FACILITIES IS TAKEN FROM CITY OF HOUSTON RECORD DRAWINGS. CONTRACTOR SHALL FIELD VERIFY ALL DIMENSIONS, ELEVATIONS AND ALL OTHER DATA PRIOR TO START OF WORK AND PROMPTLY BRING DEVIATIONS TO ENGINEER'S ATTENTION.
2. DEMOLITION AND SEQUENCE OF CONSTRUCTION SHALL BE AS PER THE CONTRACT DOCUMENTS.
3. CROSS HATCHING IS USED TO INDICATE SCHEMATICALLY THE ITEMS TO BE REMOVED DURING THIS PHASE. THE CONTRACTOR SHALL LOCATE PIPING CONNECTIONS AND UTILIZE PIPING JOINTS WHERE POSSIBLE, TO INTERCEPT THE EXISTING PIPING, TO FACILITATE CONNECTION TO NEW PROCESS LINES.
4. REMOVE ALL EXPOSED REBAR AND ANCHOR BOLTS WHICH ARE TO BE REMOVED A MINIMUM OF 1-1/2 INCHES BELOW SURFACE OF REMAINING CONCRETE. FILL ALL VOIDS WITH GROUT CONTAINING A LATEX BONDING AGENT IN ACCORDANCE WITH THE SPECIFICATIONS. GROUTING OPERATIONS SHALL PRODUCE AN EVEN FINISH VERTICALLY PLUMB TO RECEIVE THE NEW FRAMING. THE GROUTING OPERATION SHALL NOT REDUCE THE SIZE OF OPENINGS.
5. CONTRACTOR SHALL PROPERLY AND THOROUGHLY CLEAN ALL CONCRETE, PIPE AND OTHER APPURTENANCES THAT SHALL REMAIN.
6. REMOVE ALL ELECTRICAL AND INSTRUMENT CONDUIT, WIRING AND CABLE, TO THE POINT OF ORIGIN ASSOCIATED WITH ALL EQUIPMENT AND INSTRUMENTATION REMOVED.
7. REMOVE ALL PIPING ASSOCIATED WITH DEMOLISHED EQUIPMENT UNLESS OTHERWISE NOTED.
8. SOME OF THE PIPING AND EQUIPMENT SHOWN TO BE DEMOLISHED HAS BEEN PREVIOUSLY REMOVED OR PARTIALLY DISMANTLED. THE CONTRACTOR SHALL REMOVE ALL REMAINING EQUIPMENT, PIPING AND CONCRETE PEDESTALS.
9. THE CONTRACTOR SHALL REMOVE ALL SURPLUS CONCRETE PEDESTALS TO A MINIMUM OF 1-1/2" BELOW THE SURFACE OF THE EXISTING FLOOR AND ALL SURFACES SHALL BE REPAIRED USING GROUT CONTAINING A LATEX BONDING AGENT IN ACCORDANCE WITH THE SPECIFICATIONS.
10. ALL UNDERGROUND FACILITIES SHOWN TO BE DEMOLISHED MAY BE FILLED, PLUGGED, AND ABANDONED IN PLACE UNLESS SPECIFICALLY NOTED TO BE REMOVED.
11. PRESERVE AND PROTECT REBAR WHERE IT IS SHOWN TO BE REUSED. DO NOT OVERCUT CORNERS OF OPENINGS. DO NOT CUT THE REBAR AS THE CONCRETE IS BEING REMOVED. USE BONDING AGENT AND PREMOLDED SELF-ADHESIVE WATERSTOP WHERE CONDITIONS REQUIRE THEIR USE.
12. ALL PIPE HANGERS MOUNTING BRACKETS ARE TO BE LEFT IN PLACE.
13. WHERE DEMOLITION ACTIVITIES LEAVE ANY OPENING IN THE GRATING, WALKWAY OR WORK PLATFORMS LARGER THAN 3 INCHES, GRATING SHALL BE INSTALLED TO COVER THE OPENING. THE GRATING MUST MATCH THE EXISTING GRATING AND MUST NOT PRESENT A TRIP HAZARD.

REV NO	DESCRIPTION	APP'D	DATE

SEAL — STATE OF TEXAS — DAVID L. ROSS — 64305 — REGISTERED PROFESSIONAL ENGINEER — 1/21/99

SEAL — AS-BUILT — David L. Ross 1/25/02

CH2M HILL
7600 West Tidwell Road, Suite 400
Houston Tx 77040
713.462.0161

Binkley & Barfield, Inc.
Consulting Engineers
1710 Seamist Drive Houston, Texas 77008

ALMEDA SIMS
BIOSOLIDS
DRYER REHABILITATION

CIP NO 0298-05-3
FILE NO: 4289-4

DEMOLITION OF PNEUMATIC CONVEYANCE SYSTEMS

CITY OF HOUSTON
DEPARTMENT OF PUBLIC WORKS AND ENGINEERING
ENGINEERING, CONSTRUCTION AND REAL ESTATE GROUP

SECTION APPROVALS

WATER ENGINEERING
TRAFFIC AND SIGNAL ENGINEERING
WASTEWATER ENGINEERING — 2-25-99
STREET & BRIDGE ENGINEERING
STORMWATER ENGINEERING
CONSTRUCTION — 3/1/99
3/2/99

OTHER DEPARTMENTS

PLANNING AND DEVELOPMENT
SPONSOR DEPARTMENT
CITY ENGINEER — 3-2-99 DATE
DIRECTOR OF PUBLIC WORKS AND ENGINEERING — 3/1/99 DATE

SUBMITTED:
SCALE: SEE BAR SCALE
DATE:
SURVEY BY: N/A
F B NO:

DESIGNED BY: DJR
DRAWN BY: LTG
DWG. NO. : D-10
SHT NO 92 of 159 SHTS

CITY DWG NO: 35001

ORIGINAL SCALE IN INCHES FOR REDUCED PLANS
0 1 2 3
SCALE: 3/4 IN. = 1 FT.
SCALE: 1/2 IN. = 1 FT.
SCALE: 1/4 IN. = 1 FT.
SCALE: 1/8 IN. = 1 FT.

CADD DWG FILE NO :F:/64305/ FILE DATE--OPERATOR: 10/29/98--LTG

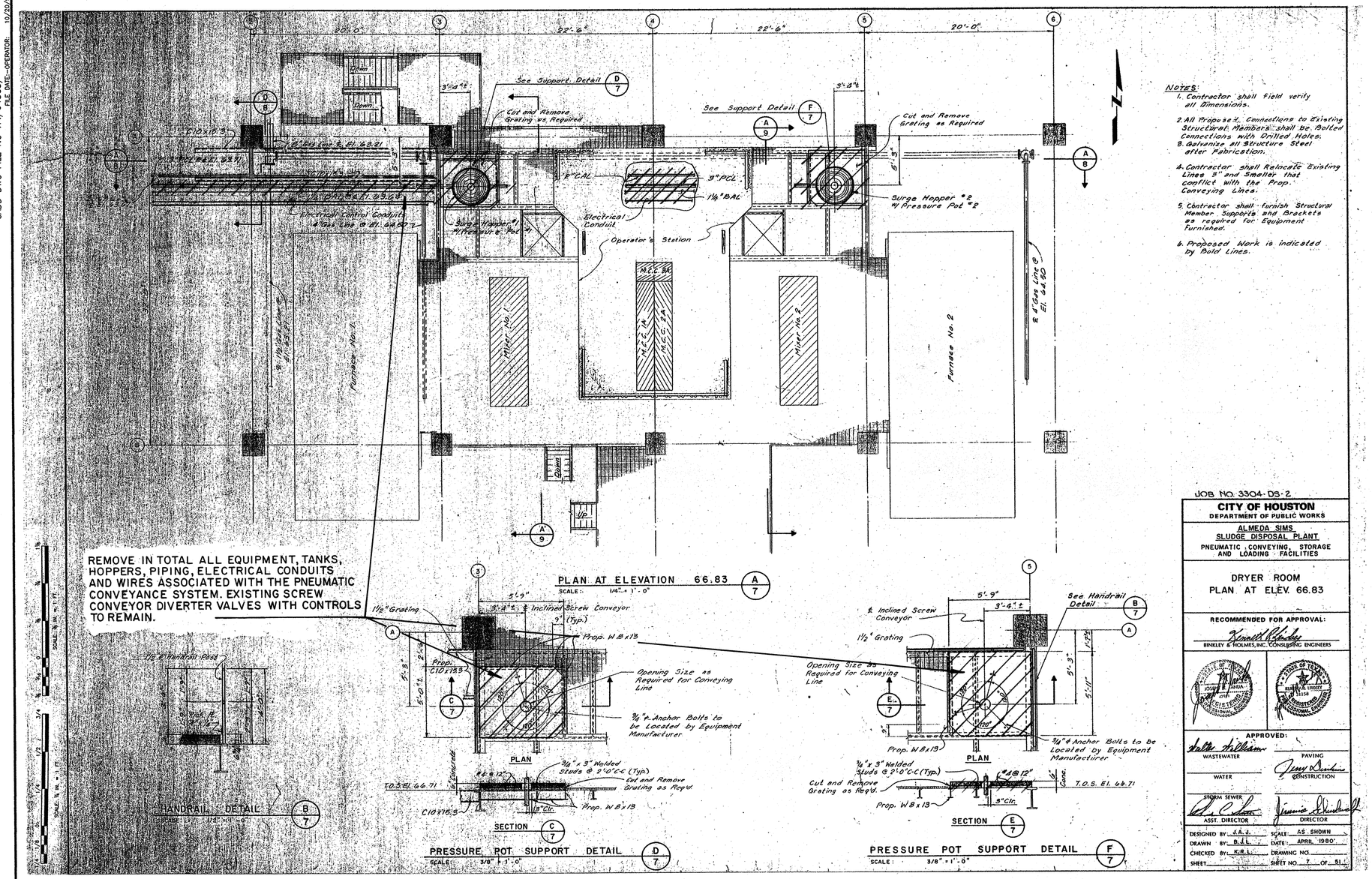

NOTES:
1. Contractor shall Field verify all Dimensions.
2. All Proposed Connections to Existing Structural Members shall be Bolted Connections with Drilled Holes.
3. Galvanize all Structure Steel after Fabrication.
4. Contractor shall Relocate Existing Lines 3" and Smaller that conflict with the Prop. Conveying Lines.
5. Contractor shall furnish Structural Member Supports and Brackets as required for Equipment Furnished.
6. Proposed Work is indicated by Bold Lines.

JOB NO. 3304-DS-2

CITY OF HOUSTON
DEPARTMENT OF PUBLIC WORKS

ALMEDA SIMS
SLUDGE DISPOSAL PLANT
PNEUMATIC, CONVEYING, STORAGE AND LOADING FACILITIES

DRYER ROOM
PLAN AT ELEV. 66.83

RECOMMENDED FOR APPROVAL:
Kenneth Ridder
BINKLEY & HOLMES, INC. CONSULTING ENGINEERS

APPROVED:
WASTEWATER
PAVING
WATER
CONSTRUCTION
STORM SEWER
ASST. DIRECTOR
DIRECTOR

DESIGNED BY: J.A.J. SCALE: AS SHOWN
DRAWN BY: B.J.L. DATE: APRIL 1980
CHECKED BY: K.R.L. DRAWING NO.
SHEET SHEET NO. 7 OF 51

NOTES:

1. ALL FACILITIES SHOWN ARE EXISTING UNLESS OTHERWISE NOTED. DATA SHOWN FOR EXISTING FACILITIES IS TAKEN FROM CITY OF HOUSTON RECORD DRAWINGS. CONTRACTOR SHALL FIELD VERIFY ALL DIMENSIONS, ELEVATIONS AND ALL OTHER DATA PRIOR TO START OF WORK AND PROMPTLY BRING DEVIATIONS TO ENGINEER'S ATTENTION.
2. DEMOLITION AND SEQUENCE OF CONSTRUCTION SHALL BE AS PER THE CONTRACT DOCUMENTS.
3. CROSS HATCHING IS USED TO INDICATE SCHEMATICALLY THE ITEMS TO BE REMOVED DURING THIS PHASE. THE CONTRACTOR SHALL LOCATE PIPING CONNECTIONS AND UTILIZE PIPING JOINTS WHERE POSSIBLE, TO INTERCEPT THE EXISTING PIPING, TO FACILITATE CONNECTION TO NEW PROCESS LINES.
4. REMOVE ALL EXPOSED REBAR AND ANCHOR BOLTS WHICH ARE TO BE REMOVED A MINIMUM OF 1-1/2 INCHES BELOW SURFACE OF REMAINING CONCRETE. FILL ALL VOIDS WITH GROUT CONTAINING A LATEX BONDING AGENT IN ACCORDANCE WITH THE SPECIFICATIONS. GROUTING OPERATIONS SHALL PRODUCE AN EVEN FINISH VERTICALLY PLUMB TO RECEIVE THE NEW FRAMING. THE GROUTING OPERATION SHALL NOT REDUCE THE SIZE OF OPENINGS.
5. CONTRACTOR SHALL PROPERLY AND THOROUGHLY CLEAN ALL CONCRETE, PIPE AND OTHER APPURTENANCES THAT SHALL REMAIN.
6. REMOVE ALL ELECTRICAL AND INSTRUMENT CONDUIT, WIRING AND CABLE, TO THE POINT OF ORIGIN ASSOCIATED WITH ALL EQUIPMENT AND INSTRUMENTATION REMOVED.
7. REMOVE ALL PIPING ASSOCIATED WITH DEMOLISHED EQUIPMENT UNLESS OTHERWISE NOTED.
8. SOME OF THE PIPING AND EQUIPMENT SHOWN TO BE DEMOLISHED HAS BEEN PREVIOUSLY REMOVED OR PARTIALLY DISMANTLED. THE CONTRACTOR SHALL REMOVE ALL REMAINING EQUIPMENT, PIPING AND CONCRETE PEDESTALS.
9. THE CONTRACTOR SHALL REMOVE ALL SURPLUS CONCRETE PEDESTALS TO A MINIMUM OF 1-1/2" BELOW THE SURFACE OF THE EXISTING FLOOR AND ALL SURFACES SHALL BE REPAIRED USING GROUT CONTAINING A LATEX BONDING AGENT IN ACCORDANCE WITH THE SPECIFICATIONS.
10. ALL UNDERGROUND FACILITIES SHOWN TO BE DEMOLISHED MAY BE FILLED, PLUGGED, AND ABANDONED IN PLACE UNLESS SPECIFICALLY NOTED TO BE REMOVED.
11. PRESERVE AND PROTECT REBAR WHERE IT IS SHOWN TO BE REUSED. DO NOT OVERCUT CORNERS OF OPENINGS. DO NOT CUT THE REBAR AS THE CONCRETE IS BEING REMOVED. USE BONDING AGENT AND PREMOLDED SELF-ADHESIVE WATERSTOP WHERE CONDITIONS REQUIRE THEIR USE.
12. ALL PIPE HANGERS MOUNTING BRACKETS ARE TO BE LEFT IN PLACE.
13. WHERE DEMOLITION ACTIVITIES LEAVE ANY OPENING IN THE GRATING, WALKWAY OR WORK PLATFORMS LARGER THAN 3 INCHES, GRATING SHALL BE INSTALLED TO COVER THE OPENING. THE GRATING MUST MATCH THE EXISTING GRATING AND MUST NOT PRESENT A TRIP HAZARD.

REV NO	DESCRIPTION	APP'D	DATE

SEAL — STATE OF TEXAS — DAVID J. ROSS — 68267 — REGISTERED PROFESSIONAL ENGINEER — 1/21/99

SEAL — AS-BUILT — 1/25/02

CH2M HILL
7600 West Tidwell Road, Suite 400
Houston Tx 77040
713.462.0161

Binkley & Barfield, Inc.
Consulting Engineers
1710 Seamist Drive Houston, Texas 77008

ALMEDA SIMS
BIOSOLIDS
DRYER REHABILITATION

CIP NO 0298-05-3
FILE NO: 4289-4

DEMOLITION OF PNEUMATIC CONVEYANCE SYSTEMS

CITY OF HOUSTON
DEPARTMENT OF PUBLIC WORKS AND ENGINEERING
ENGINEERING, CONSTRUCTION AND REAL ESTATE GROUP

SECTION APPROVALS

WATER ENGINEERING — TRAFFIC AND SIGNAL ENGINEERING

Hamid Yousef 2-25-99
WASTEWATER ENGINEERING — STREET & BRIDGE ENGINEERING

STORMWATER ENGINEERING — CONSTRUCTION 3/2/99

3/25/99

OTHER DEPARTMENTS

PLANNING AND DEVELOPMENT — SPONSOR DEPARTMENT

CITY ENGINEER — DATE 3-2-99

DIRECTOR OF PUBLIC WORKS AND ENGINEERING — DATE 3/5/99

SUBMITTED:
SCALE: SEE BAR SCALE
DATE:
SURVEY BY: N/A
F B NO:

DESIGNED BY: DJR
DRAWN BY: LTG
DWG. NO. : D-11
SHT NO 93 of 159 SHTS

CITY DWG NO: 35001

ORIGINAL SCALE IN INCHES FOR REDUCED PLANS
0 1 2 3

CADD DWG FILE NO :F:/643O5/
FILE DATE--OPERATOR: 10/20/98--LTG

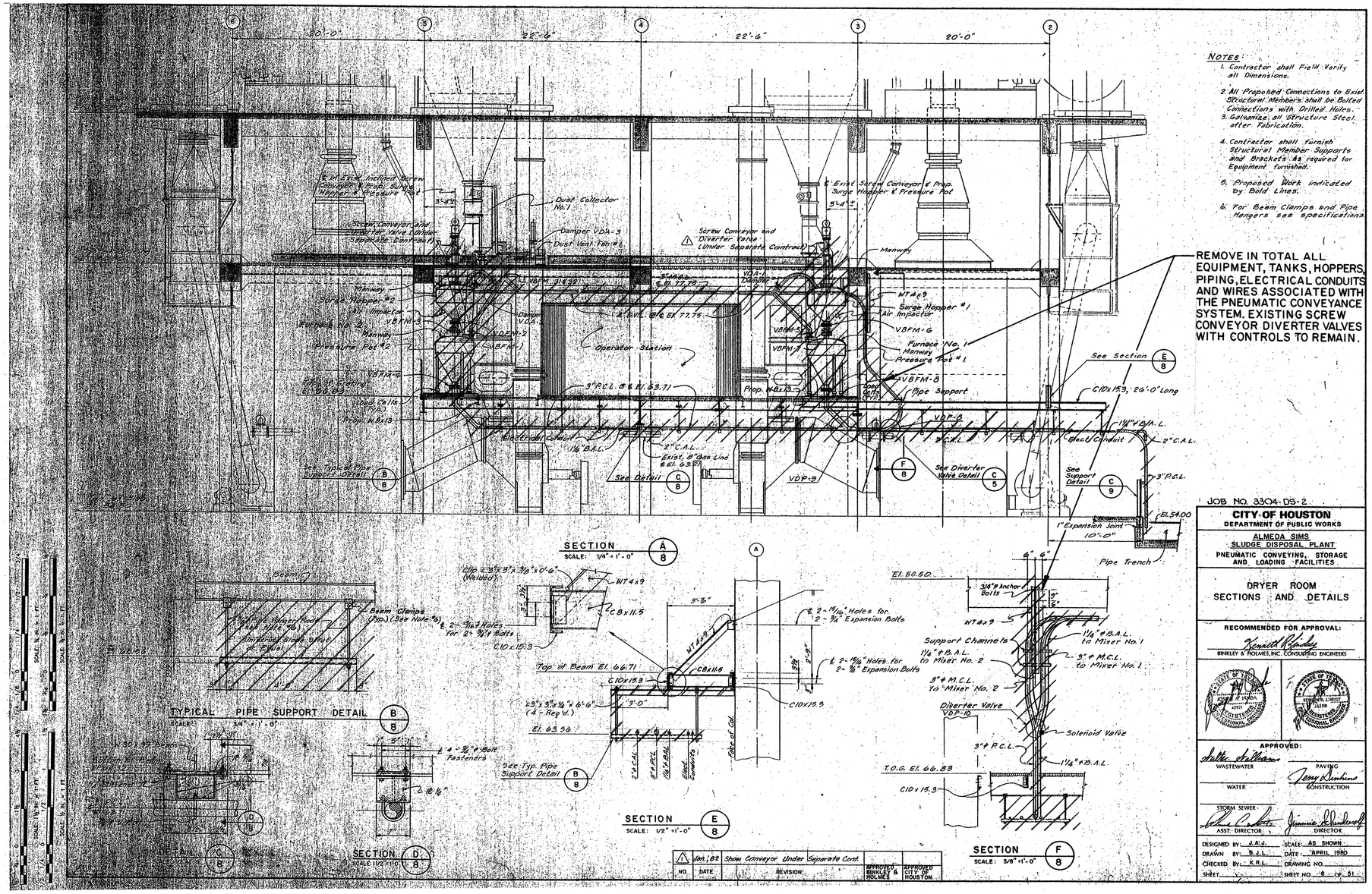

NOTES:

1. Contractor shall Field Verify all Dimensions.
2. All Proposed Connections to Exist Structural Members shall be Bolted Connections with Drilled Holes.
3. Galvanize all Structure Steel after Fabrication.
4. Contractor shall furnish Structural Member Supports and Brackets as required for Equipment furnished.
5. Proposed Work indicated by Bold Lines.
6. For Beam Clamps and Pipe Hangers see specifications.

REMOVE IN TOTAL ALL EQUIPMENT, TANKS, HOPPERS, PIPING, ELECTRICAL CONDUITS AND WIRES ASSOCIATED WITH THE PNEUMATIC CONVEYANCE SYSTEM. EXISTING SCREW CONVEYOR DIVERTER VALVES WITH CONTROLS TO REMAIN.

NO	DATE	REVISION	APPROVED BINKLEY & BARFIELD	APPROVED CITY OF HOUSTON
1	Jan.'02	Show Conveyor Under Separate Cont.		

JOB NO. 3304-05-2

CITY OF HOUSTON
DEPARTMENT OF PUBLIC WORKS

ALMEDA SIMS
SLUDGE DISPOSAL PLANT
PNEUMATIC CONVEYING, STORAGE AND LOADING FACILITIES

DRYER ROOM
SECTIONS AND DETAILS

RECOMMENDED FOR APPROVAL:
BINKLEY & BARFIELD, INC. CONSULTING ENGINEERS

APPROVED:
WASTEWATER
WATER
STORM SEWER
ASST. DIRECTOR
PAVING
CONSTRUCTION
DIRECTOR

DESIGNED BY: J.R.J.	SCALE: AS SHOWN
DRAWN BY: B.J.L.	DATE: APRIL 1980
CHECKED BY: K.P.L.	DRAWING NO.
SHEET	SHEET NO. 8 OF 51

NOTES:

1. ALL FACILITIES SHOWN ARE EXISTING UNLESS OTHERWISE NOTED. DATA SHOWN FOR EXISTING FACILITIES IS TAKEN FROM CITY OF HOUSTON RECORD DRAWINGS. CONTRACTOR SHALL FIELD VERIFY ALL DIMENSIONS, ELEVATIONS AND ALL OTHER DATA PRIOR TO START OF WORK AND PROMPTLY BRING DEVIATIONS TO ENGINEER'S ATTENTION.
2. DEMOLITION AND SEQUENCE OF CONSTRUCTION SHALL BE AS PER THE CONTRACT DOCUMENTS.
3. CROSS HATCHING IS USED TO INDICATE SCHEMATICALLY THE ITEMS TO BE REMOVED DURING THIS PHASE. THE CONTRACTOR SHALL LOCATE PIPING CONNECTIONS AND UTILIZE PIPING JOINTS WHERE POSSIBLE, TO INTERCEPT THE EXISTING PIPING, TO FACILITATE CONNECTION TO NEW PROCESS LINES.
4. REMOVE ALL EXPOSED REBAR AND ANCHOR BOLTS WHICH ARE TO BE REMOVED A MINIMUM OF 1-1/2 INCHES BELOW SURFACE OF REMAINING CONCRETE. FILL ALL VOIDS WITH GROUT CONTAINING A LATEX BONDING AGENT IN ACCORDANCE WITH THE SPECIFICATIONS. GROUTING OPERATIONS SHALL PRODUCE AN EVEN FINISH VERTICALLY PLUMB TO RECEIVE THE NEW FRAMING. THE GROUTING OPERATION SHALL NOT REDUCE THE SIZE OF OPENINGS.
5. CONTRACTOR SHALL PROPERLY AND THOROUGHLY CLEAN ALL CONCRETE, PIPE AND OTHER APPURTENANCES THAT SHALL REMAIN.
6. REMOVE ALL ELECTRICAL AND INSTRUMENT CONDUIT, WIRING AND CABLE, TO THE POINT OF ORIGIN ASSOCIATED WITH ALL EQUIPMENT AND INSTRUMENTATION REMOVED.
7. REMOVE ALL PIPING ASSOCIATED WITH DEMOLISHED EQUIPMENT UNLESS OTHERWISE NOTED.
8. SOME OF THE PIPING AND EQUIPMENT SHOWN TO BE DEMOLISHED HAS BEEN PREVIOUSLY REMOVED OR PARTIALLY DISMANTLED. THE CONTRACTOR SHALL REMOVE ALL REMAINING EQUIPMENT, PIPING AND CONCRETE PEDESTALS.
9. THE CONTRACTOR SHALL REMOVE ALL SURPLUS CONCRETE PEDESTALS TO A MINIMUM OF 1-1/2" BELOW THE SURFACE OF THE EXISTING FLOOR AND ALL SURFACES SHALL BE REPAIRED USING GROUT CONTAINING A LATEX BONDING AGENT IN ACCORDANCE WITH THE SPECIFICATIONS.
10. ALL UNDERGROUND FACILITIES SHOWN TO BE DEMOLISHED MAY BE FILLED, PLUGGED, AND ABANDONED IN PLACE UNLESS SPECIFICALLY NOTED TO BE REMOVED.
11. PRESERVE AND PROTECT REBAR WHERE IT IS SHOWN TO BE REUSED. DO NOT OVERCUT CORNERS OF OPENINGS. DO NOT CUT THE REBAR AS THE CONCRETE IS BEING REMOVED. USE BONDING AGENT AND PREMOLDED SELF-ADHESIVE WATERSTOP WHERE CONDITIONS REQUIRE THEIR USE.
12. ALL PIPE HANGERS MOUNTING BRACKETS ARE TO BE LEFT IN PLACE.
13. WHERE DEMOLITION ACTIVITIES LEAVE ANY OPENING IN THE GRATING, WALKWAY OR WORK PLATFORMS LARGER THAN 3 INCHES, GRATING SHALL BE INSTALLED TO COVER THE OPENING. THE GRATING MUST MATCH THE EXISTING GRATING AND MUST NOT PRESENT A TRIP HAZARD.

ORIGINAL SCALE IN INCHES FOR REDUCED PLANS
0 1 2 3

REV NO	DESCRIPTION	APP'D	DATE

SEAL — STATE OF TEXAS — DAVID J. ROSS — 72267 — REGISTERED PROFESSIONAL ENGINEER — 11/21/99

SEAL — AS-BUILT — 1/25/02

CH2M HILL
7600 West Tidwell Road, Suite 400
Houston Tx 77040
713.462.0161

Binkley & Barfield, Inc.
Consulting Engineers
1710 Seamist Drive Houston, Texas 77008

ALMEDA SIMS BIOSOLIDS DRYER REHABILITATION

CIP NO 0298-05-3
FILE NO: 4289-4

DEMOLITION OF PNEUMATIC CONVEYANCE SYSTEMS

CITY OF HOUSTON
DEPARTMENT OF PUBLIC WORKS AND ENGINEERING
ENGINEERING, CONSTRUCTION AND REAL ESTATE GROUP

SECTION APPROVALS

WATER ENGINEERING
TRAFFIC AND SIGNAL ENGINEERING
WASTEWATER ENGINEERING — 2-25-99
STREET & BRIDGE ENGINEERING
STORMWATER ENGINEERING
CONSTRUCTION — 3/2/99

OTHER DEPARTMENTS

PLANNING AND DEVELOPMENT
SPONSOR DEPARTMENT
CITY ENGINEER — 3-2-99 DATE
DIRECTOR OF PUBLIC WORKS AND ENGINEERING — 3/5/99 DATE

SUBMITTED:	DESIGNED BY: DJR
SCALE: SEE BAR SCALE	DRAWN BY: LTG
DATE:	DWG. NO. : D-12
SURVEY BY: N/A	SHT NO 94 of 159 SHTS
F B NO:	CITY DWG NO: 35001

CADD DWG FILE NO :F:/64305/ FILE DATE—OPERATOR: 10/20/98—LTG

REV.NO	DATE	DESCRIPTION	DESIGN	CHECKED
△	6-77	Rev. Junction Box	J.C.S	K.R.L.

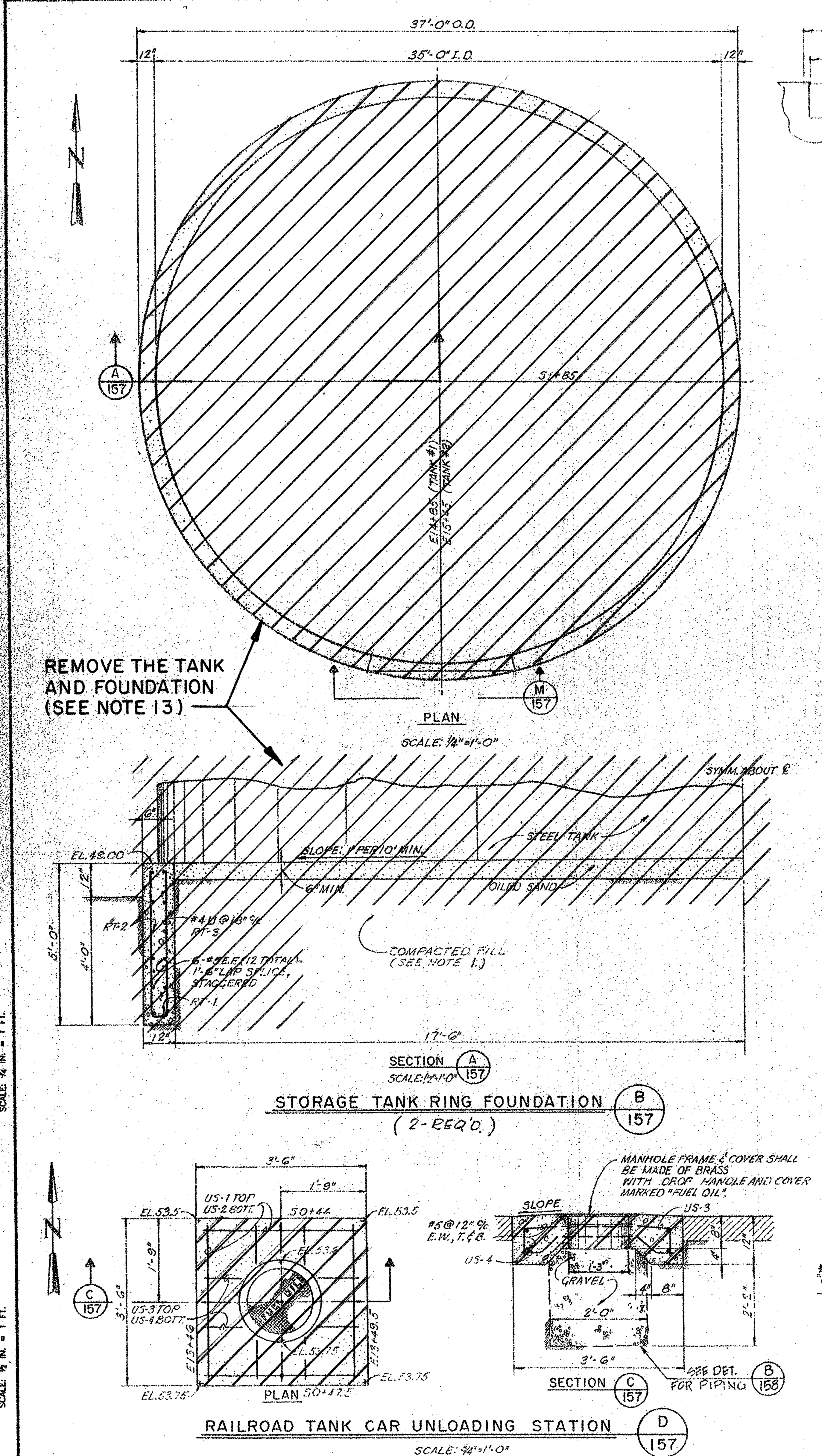

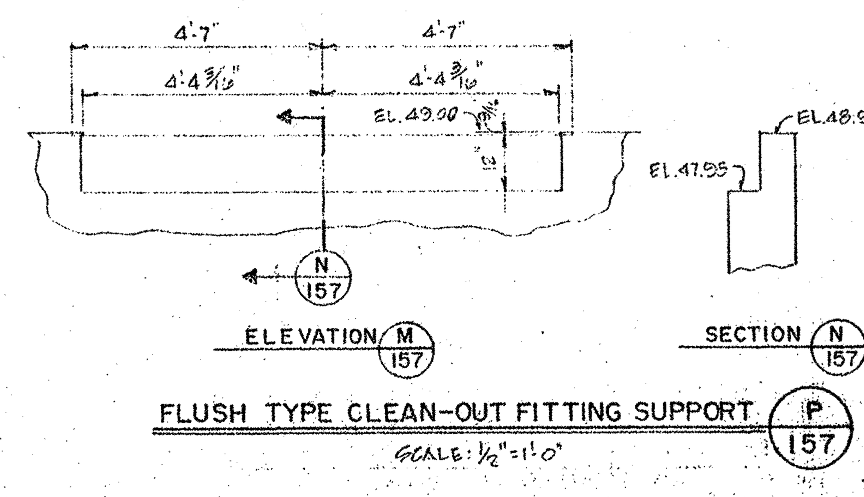

REINFORCING STEEL SCHEDULE							
STORAGE TANK RING FOUNDATION							
MARK	TYPE	SIZE	NO. REQ'D.	LENGTH PER BAR	BENT BAR DIMENSIONS A	B	C
RT-1	1	#5	30	23'-9"	3'-10"	22'-0"	-
RT-2	1	#5	30	24'-8"	4'-0"	22'-10"	-
RT-3	6	#4	72	10'-0"	4'-8"	8"	-
RAIL ROAD TANK CAR UNLOADING STATION							
US-1	7	#5	4	4'-6"	3'-2"	8"	-
US-2	STR.	#5	4	3'-4"		-	-
US-3	2	#5	8	1'-5"	9"	8"	-
US-4	5	#5	8	6"	5"	-	-
PIPE SLEEPER							
PS-1	STR.	#5	17	2'-8"		-	-
PS-2	4	#5	4	4'-10"	3'-8"	1'-8"	-
JUNCTION BOX							
JB-1	4	#5	14	3'-0"	2'-0"	1'-0"	-
JB-2	STR.	#5	14	6'-9"			
JB-3	STR.	#5	14	3'-8"			
JB-4	STR.	#5	28	2'-8"			
RETAINING WALL							
RW-1	STR.	#5	9	65'-8"	-	-	-
RW-2	STR.	#5	66	2'-8"	-	-	-
RW-3	4	#5	33	4'-4"	3'-2"	1'-2"	-
VALVE BOX							
VB-1	4	#5	20	3'-0"	2'-0"	1'-0"	-
VB-2	STR.	#5	20	5'-1"	-	-	-
VB-3	STR.	#5	36	4'-8"	-	-	-
OIL SEPARATOR SLAB							
OS-1	STR.	#5	20	4'-8"	-	-	-

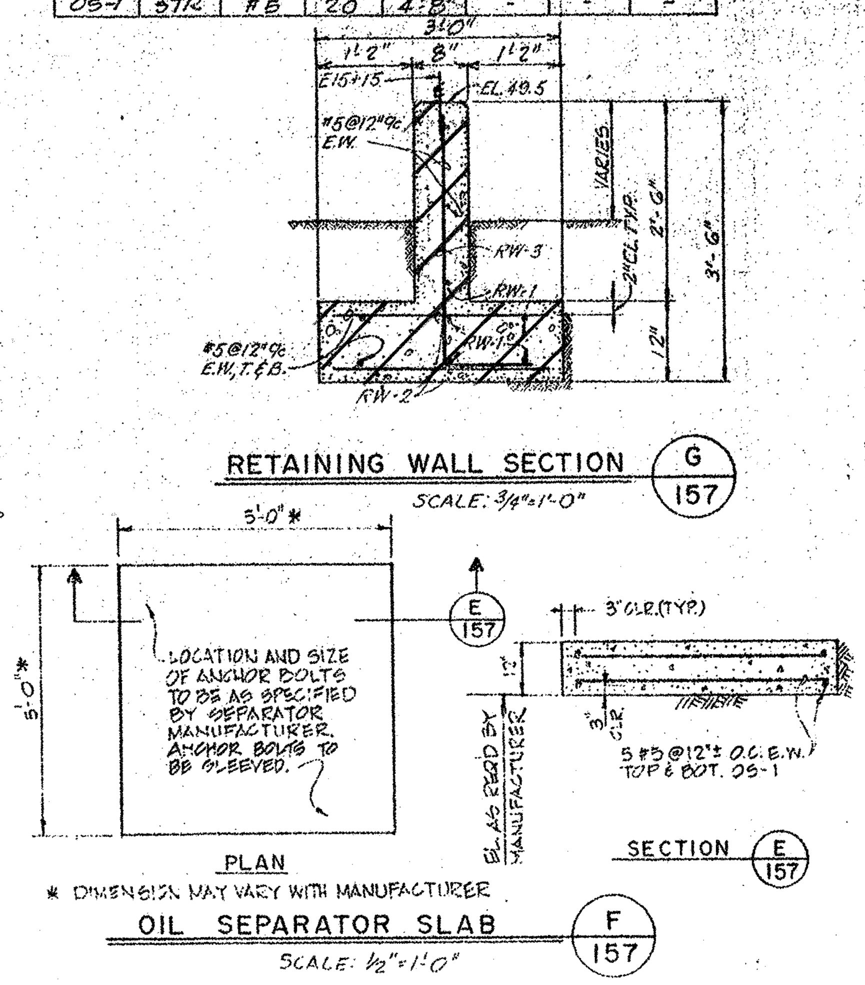

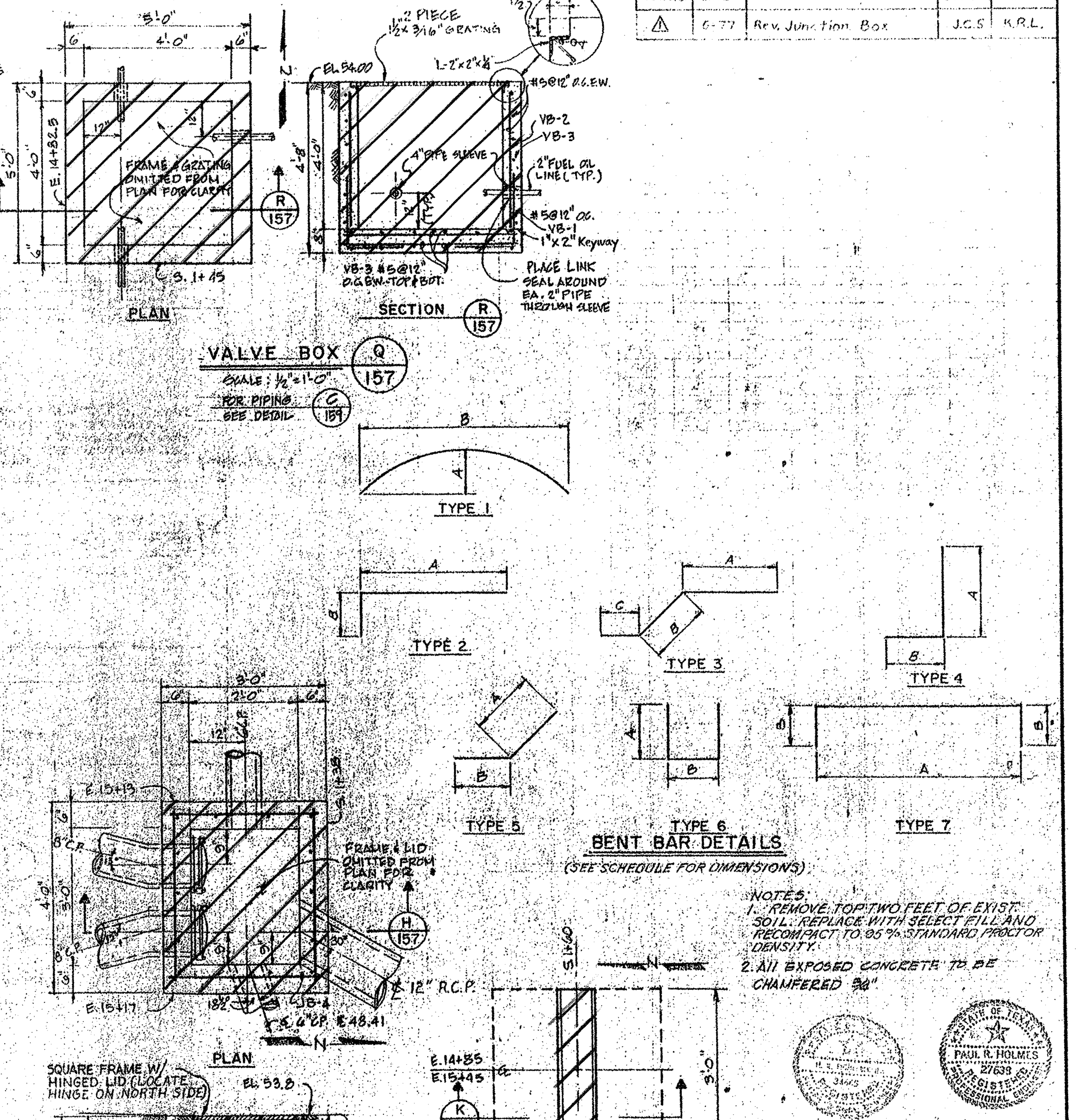

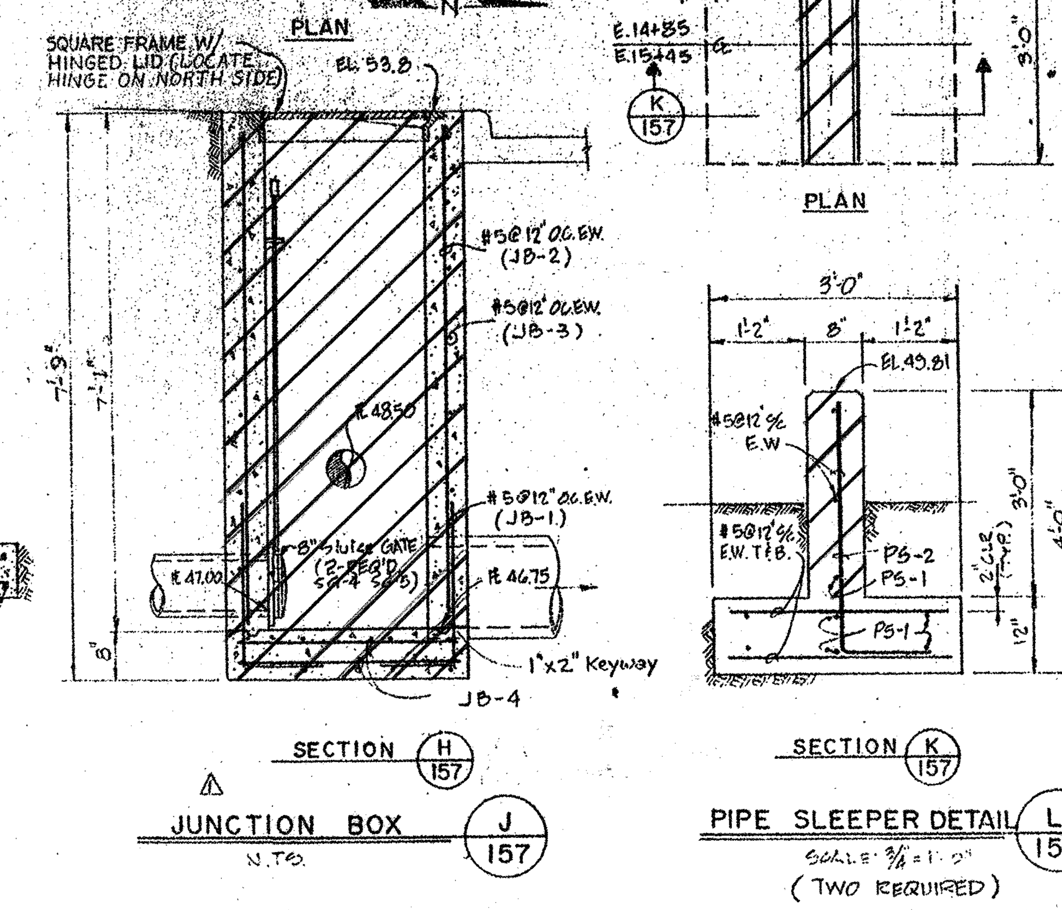

CITY OF HOUSTON
DEPARTMENT OF PUBLIC WORKS

ALMEDA SIMS
SLUDGE DISPOSAL
PLANT - 1973

FUEL OIL UNLOADING AND
STORAGE FACILITIES
STRUCTURAL

RECOMMENDED FOR APPROVAL:
BINKLEY & HOLMES, INC., CONSULTING ENGINEERS
APPROVED:
CHIEF ENGINEER — ASST. CHIEF ENGINEER
ASST. DIRECTORS OF PUBLIC WORKS
DIRECTOR OF PUBLIC WORKS

DESIGNED BY: J.H.P.E.
DRAWN BY: R.L.P.
CHECKED BY: H.B.E.
SCALE: AS NOTED
DATE: SEPTEMBER, 1973
SHEET 157 OF 200 SHEETS
DRAWING NO. 16045

NOTES:

1. ALL FACILITIES SHOWN ARE EXISTING UNLESS OTHERWISE NOTED. DATA SHOWN FOR EXISTING FACILITIES IS TAKEN FROM CITY OF HOUSTON RECORD DRAWINGS. CONTRACTOR SHALL FIELD VERIFY ALL DIMENSIONS, ELEVATIONS AND ALL OTHER DATA PRIOR TO START OF WORK AND PROMPTLY BRING DEVIATIONS TO ENGINEER'S ATTENTION.
2. DEMOLITION AND SEQUENCE OF CONSTRUCTION SHALL BE AS PER THE CONTRACT DOCUMENTS.
3. CROSS HATCHING IS USED TO INDICATE SCHEMATICALLY THE ITEMS TO BE REMOVED DURING THIS PHASE. THE CONTRACTOR SHALL LOCATE PIPING CONNECTIONS AND UTILIZE PIPING JOINTS WHERE POSSIBLE, TO INTERCEPT THE EXISTING PIPING, TO FACILITATE CONNECTION TO NEW PROCESS LINES.
4. REMOVE ALL EXPOSED REBAR AND ANCHOR BOLTS WHICH ARE TO BE REMOVED A MINIMUM OF 1-1/2 INCHES BELOW SURFACE OF REMAINING CONCRETE. FILL ALL VOIDS WITH GROUT CONTAINING A LATEX BONDING AGENT IN ACCORDANCE WITH THE SPECIFICATIONS. GROUTING OPERATIONS SHALL PRODUCE AN EVEN FINISH VERTICALLY PLUMB TO RECEIVE THE NEW FRAMING. THE GROUTING OPERATION SHALL NOT REDUCE THE SIZE OF OPENINGS.
5. CONTRACTOR SHALL PROPERLY AND THOROUGHLY CLEAN ALL CONCRETE, PIPE AND OTHER APPURTENANCES THAT SHALL REMAIN.
6. REMOVE ALL ELECTRICAL AND INSTRUMENT CONDUIT, WIRING AND CABLE, TO THE POINT OF ORIGIN ASSOCIATED WITH ALL EQUIPMENT AND INSTRUMENTATION REMOVED.
7. REMOVE ALL PIPING ASSOCIATED WITH DEMOLISHED EQUIPMENT UNLESS OTHERWISE NOTED.
8. SOME OF THE PIPING AND EQUIPMENT SHOWN TO BE DEMOLISHED HAS BEEN PREVIOUSLY REMOVED OR PARTIALLY DISMANTLED. THE CONTRACTOR SHALL REMOVE ALL REMAINING. EQUIPMENT, PIPING AND CONCRETE PEDESTALS.
9. THE CONTRACTOR SHALL REMOVE ALL SURPLUS CONCRETE PEDESTALS TO A MINIMUM OF 1-1/2" BELOW THE SURFACE OF THE EXISTING FLOOR AND ALL SURFACES SHALL BE REPAIRED USING GROUT CONTAINING A LATEX BONDING AGENT IN ACCORDANCE WITH THE SPECIFICATIONS.
10. ALL UNDERGROUND FACILITIES SHOWN TO BE DEMOLISHED MAY BE FILLED, PLUGGED, AND ABANDONED IN PLACE UNLESS SPECIFICALLY NOTED TO BE REMOVED.
11. PRESERVE AND PROTECT REBAR WHERE IT IS SHOWN TO BE REUSED. DO NOT OVERCUT CORNERS OF OPENINGS. DO NOT CUT THE REBAR AS THE CONCRETE IS BEING REMOVED. USE BONDING AGENT AND PREMOLDED SELF-ADHESIVE WATERSTOP WHERE CONDITIONS REQUIRE THEIR USE.
12. ALL PIPE HANGERS MOUNTING BRACKETS ARE TO BE LEFT IN PLACE.
13. REMOVE TANKS AND CRACK ALL CONCRETE TO PIECES SMALLER THAN 3FT ACROSS. REMOVE PORTION WITHIN 2FT OF FINISH GRADE. BACKFILL AND COMPACT SOIL TO 95% STANDARD PROCTOR IN CONTAINMENT AREA. PAVE WITH CONCRETE AND BASE MATERIAL AS SHOWN IN SECTION B/D-01 WITH 3/4" DOWELS AT 24" SPACING INTO EXISTING CONCRETE.

ORIGINAL SCALE IN INCHES FOR REDUCED PLANS

REV NO	DESCRIPTION	APP'D	DATE

SEAL — STATE OF TEXAS — DAVID J. ROSS — 68267 — REGISTERED PROFESSIONAL ENGINEER — 1/21/99

SEAL — AS-BUILT — 1/25/02

CH2M HILL
7600 West Tidwell Road, Suite 400
Houston Tx 77040
713.462.0161

Binkley & Barfield, Inc.
Consulting Engineers
1710 Seamist Drive Houston, Texas 77008

ALMEDA SIMS BIOSOLIDS DRYER REHABILITATION

CIP NO 0298-05-3
FILE NO: 4289-4

DEMOLITION OF FUEL STORAGE TANKS

CITY OF HOUSTON
DEPARTMENT OF PUBLIC WORKS AND ENGINEERING
ENGINEERING, CONSTRUCTION AND REAL ESTATE GROUP

SECTION APPROVALS

WATER ENGINEERING — TRAFFIC AND SIGNAL ENGINEERING
WASTEWATER ENGINEERING 2-25-99 — STREET & BRIDGE ENGINEERING
STORMWATER ENGINEERING — CONSTRUCTION 3/2/99
2/25/99

OTHER DEPARTMENTS

PLANNING AND DEVELOPMENT — SPONSOR DEPARTMENT

CITY ENGINEER — DATE 3-2-99
DIRECTOR OF PUBLIC WORKS AND ENGINEERING — DATE 3/8/99

SUBMITTED:
SCALE: SEE BAR SCALE
DATE:
SURVEY BY: N/A
F B NO:

DESIGNED BY: DJR
DRAWN BY: LTG
DWG. NO. : D-13
SHT NO 95 of 159 SHTS

CITY DWG NO: 35001

CADD DWG FILE NO. :F:/64305/
PLT DATE-OPERATOR: 10/20/98-LTG

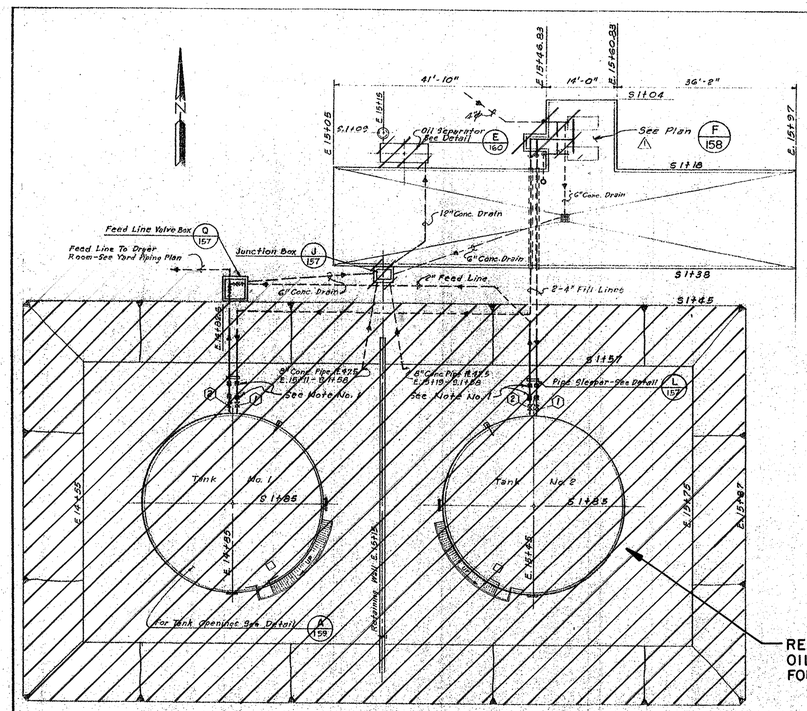

FUEL OIL UNLOADING AND STORAGE FACILITIES PIPING PLAN

Scale: 1"=10'

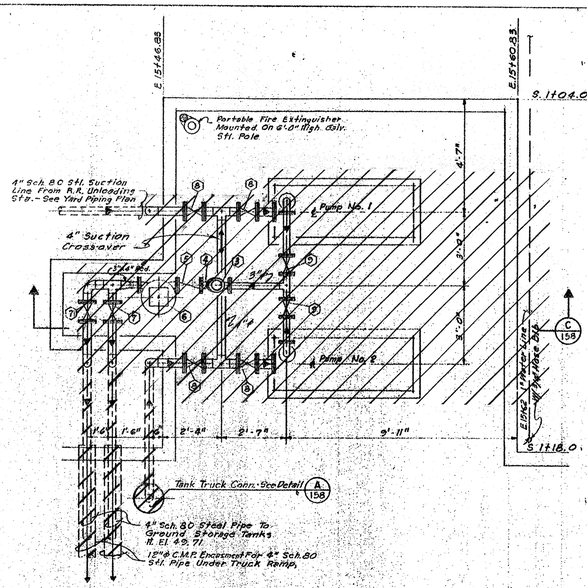

FUEL OIL PUMPS PIPING PLAN F 158

Scale: ½"=1'-0"

FITTING SCHEDULE	
ITEM NO.	DESCRIPTION
1	4" Flg. Cast Steel Wedge Gate Valve
2	2" Flg. Cast Steel Wedge Gate Valve
3	Air Release For Strainer
4	3" 150 Lb. ASA Strainer
5	3" Flg. Check Valve
6	3" 150 Lb. Flg. Flow Meter
7	4" Flg. Ball Valve W/ Elect. Operator
8	4" Flg. Ball Valve
9	3" Flg. Ball Valve

NOTES:

(1) 2 Ball Joint Connections On 4" Fill Line And 2" Feed Line 3'-0" Apart, Between Pipe Sleeper And Gate Valve. (Typ. Ea. Fuel Oil Storage Tank)

REMOVE IN TOTAL THE TANKS, PUMPS, OIL WATER SEPARATOR, PIPES AND FOUNDATION. (SEE NOTE 13)

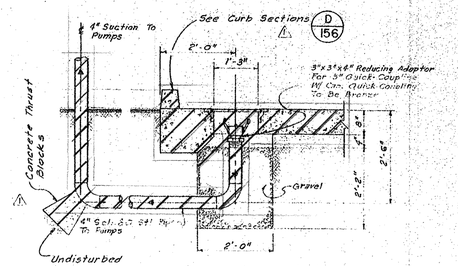

TANK TRUCK UNLOADING CONNECTION DETAIL A

Scale: ¾"=1'-0" 158

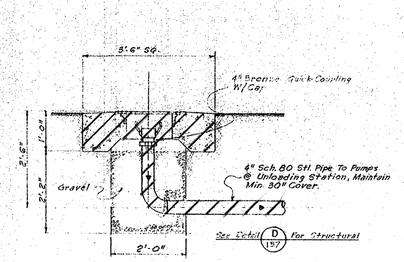

RAILROAD TANK CAR UNLOADING CONNECTION DETAIL B

Scale: ¾"=1'-0" 158

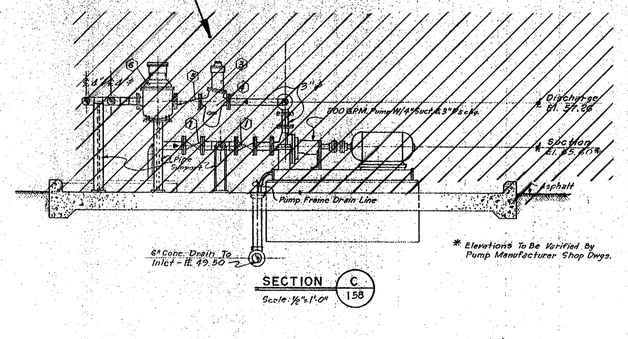

SECTION C 158

Scale: ½"=1'-0"

REV NO.	DATE	DESCRIPTION	DESIGN	CHECKED
1	3-77	ADD CONC. THRUST BLOCK & GENERAL REVISIONS	J.C.S.	S.R.S.

CITY OF HOUSTON
DEPARTMENT OF PUBLIC WORKS

ALMEDA SIMS
SLUDGE DISPOSAL
PLANT - 1973

FUEL OIL
UNLOADING FACILITIES
PIPING PLAN, & DETAILS

RECOMMENDED FOR APPROVAL:
BINKLEY & HOLMES, INC., CONSULTING ENGINEERS

APPROVED:
CHIEF ENGINEER — ASST. CHIEF ENGINEER
ASST. DIRECTOR OF PUBLIC WORKS
DIRECTOR OF PUBLIC WORKS

DESIGNED BY: H.R.E.
DRAWN BY: E. THOMAS
CHECKED BY: H.R.E., O.R.Y.
SCALE: AS SHOWN
DATE: SEPT 1975
SHEET 158 OF 200 SHEETS
DRAWING NO. 18045

NOTES:

1. ALL FACILITIES SHOWN ARE EXISTING UNLESS OTHERWISE NOTED. DATA SHOWN FOR EXISTING FACILITIES IS TAKEN FROM CITY OF HOUSTON RECORD DRAWINGS. CONTRACTOR SHALL FIELD VERIFY ALL DIMENSIONS, ELEVATIONS AND ALL OTHER DATA PRIOR TO START OF WORK AND PROMPTLY BRING DEVIATIONS TO ENGINEER'S ATTENTION.
2. DEMOLITION AND SEQUENCE OF CONSTRUCTION SHALL BE AS PER THE CONTRACT DOCUMENTS.
3. CROSS HATCHING IS USED TO INDICATE SCHEMATICALLY THE ITEMS TO BE REMOVED DURING THIS PHASE. THE CONTRACTOR SHALL LOCATE PIPING CONNECTIONS AND UTILIZE PIPING JOINTS WHERE POSSIBLE, TO INTERCEPT THE EXISTING PIPING, TO FACILITATE CONNECTION TO NEW PROCESS LINES.
4. REMOVE ALL EXPOSED REBAR AND ANCHOR BOLTS WHICH ARE TO BE REMOVED A MINIMUM OF 1-1/2 INCHES BELOW SURFACE OF REMAINING CONCRETE. FILL ALL VOIDS WITH GROUT CONTAINING A LATEX BONDING AGENT IN ACCORDANCE WITH THE SPECIFICATIONS. GROUTING OPERATIONS SHALL PRODUCE AN EVEN FINISH VERTICALLY PLUMB TO RECEIVE THE NEW FRAMING. THE GROUTING OPERATION SHALL NOT REDUCE THE SIZE OF OPENINGS.
5. CONTRACTOR SHALL PROPERLY AND THOROUGHLY CLEAN ALL CONCRETE, PIPE AND OTHER APPURTENANCES THAT SHALL REMAIN.
6. REMOVE ALL ELECTRICAL AND INSTRUMENT CONDUIT, WIRING AND CABLE, TO THE POINT OF ORIGIN ASSOCIATED WITH ALL EQUIPMENT AND INSTRUMENTATION REMOVED.
7. REMOVE ALL PIPING ASSOCIATED WITH DEMOLISHED EQUIPMENT UNLESS OTHERWISE NOTED.
8. SOME OF THE PIPING AND EQUIPMENT SHOWN TO BE DEMOLISHED HAS BEEN PREVIOUSLY REMOVED OR PARTIALLY DISMANTLED. THE CONTRACTOR SHALL REMOVE ALL REMAINING EQUIPMENT, PIPING AND CONCRETE PEDESTALS.
9. THE CONTRACTOR SHALL REMOVE ALL SURPLUS CONCRETE PEDESTALS TO A MINIMUM OF 1-1/2" BELOW THE SURFACE OF THE EXISTING FLOOR AND ALL SURFACES SHALL BE REPAIRED USING GROUT CONTAINING A LATEX BONDING AGENT IN ACCORDANCE WITH THE SPECIFICATIONS.
10. ALL UNDERGROUND FACILITIES SHOWN TO BE DEMOLISHED MAY BE FILLED, PLUGGED, AND ABANDONED IN PLACE UNLESS SPECIFICALLY NOTED TO BE REMOVED.
11. PRESERVE AND PROTECT REBAR WHERE IT IS SHOWN TO BE REUSED. DO NOT OVERCUT CORNERS OF OPENINGS. DO NOT CUT THE REBAR AS THE CONCRETE IS BEING REMOVED. USE BONDING AGENT AND PREMOLDED SELF-ADHESIVE WATERSTOP WHERE CONDITIONS REQUIRE THEIR USE.
12. ALL PIPE HANGERS MOUNTING BRACKETS ARE TO BE LEFT IN PLACE.
13. REMOVE TANKS AND CRACK ALL CONCRETE TO PIECES SMALLER THAN 3FT ACROSS. REMOVE PORTION WITHIN 2FT OF FINISH GRADE. BACKFILL AND COMPACT SOIL TO 95% STANDARD PROCTOR IN CONTAINMENT AREA. PAVE WITH CONCRETE AND BASE MATERIAL AS SHOWN IN SECTION B/D-01 WITH 3/4" DOWELS AT 24" SPACING INTO EXISTING CONCRETE.
14. REMOVE ALL TANK PADS, EQUIPMENT PADS AND CURBS. MATCH ELEVATIONS WITH THE ADJACENT PAVEMENT.

ORIGINAL SCALE IN INCHES FOR REDUCED PLANS

0 1 2 3

SCALE: ¾ IN. = 1 FT.

0 ¼ ½ 1 1½ 2

SCALE: ½ IN. = 1 FT.

0 ¼ ½

REV NO	DESCRIPTION	APP'D	DATE

SEAL

STATE OF TEXAS — DAVID L. ROSS — 68267 — REGISTERED PROFESSIONAL ENGINEER — 1/24/99

SEAL

AS-BUILT
Dave Ross
1/25/02

CH2M HILL
7600 West Tidwell Road, Suite 400
Houston Tx 77040
713.462.0161

Binkley & Barfield, Inc.
Consulting Engineers
1710 Seamist Drive Houston, Texas 77008

ALMEDA SIMS
BIOSOLIDS
DRYER REHABILITATION

CIP NO 0298-05-3
FILE NO: 4289-4

DEMOLITION OF FUEL OIL UNLOADING AND STORAGE FACILITIES

CITY OF HOUSTON
DEPARTMENT OF PUBLIC WORKS AND ENGINEERING
ENGINEERING, CONSTRUCTION AND REAL ESTATE GROUP

SECTION APPROVALS

WATER ENGINEERING — TRAFFIC AND SIGNAL ENGINEERING

WASTEWATER ENGINEERING — 2-25-99 — STREET & BRIDGE ENGINEERING

STORMWATER ENGINEERING — CONSTRUCTION — 3/2/99

2/25/99

OTHER DEPARTMENTS

PLANNING AND DEVELOPMENT — SPONSOR DEPARTMENT

CITY ENGINEER — 3-2-99 DATE

DIRECTOR OF PUBLIC WORKS AND ENGINEERING — 3/5/99 DATE

SUBMITTED:	DESIGNED BY: DJR
SCALE: SEE BAR SCALE	DRAWN BY: LTG
DATE:	DWG. NO. : D-14
SURVEY BY: N/A	SHT NO 96 of 159 SHTS
F B NO:	CITY DWG NO: 35001

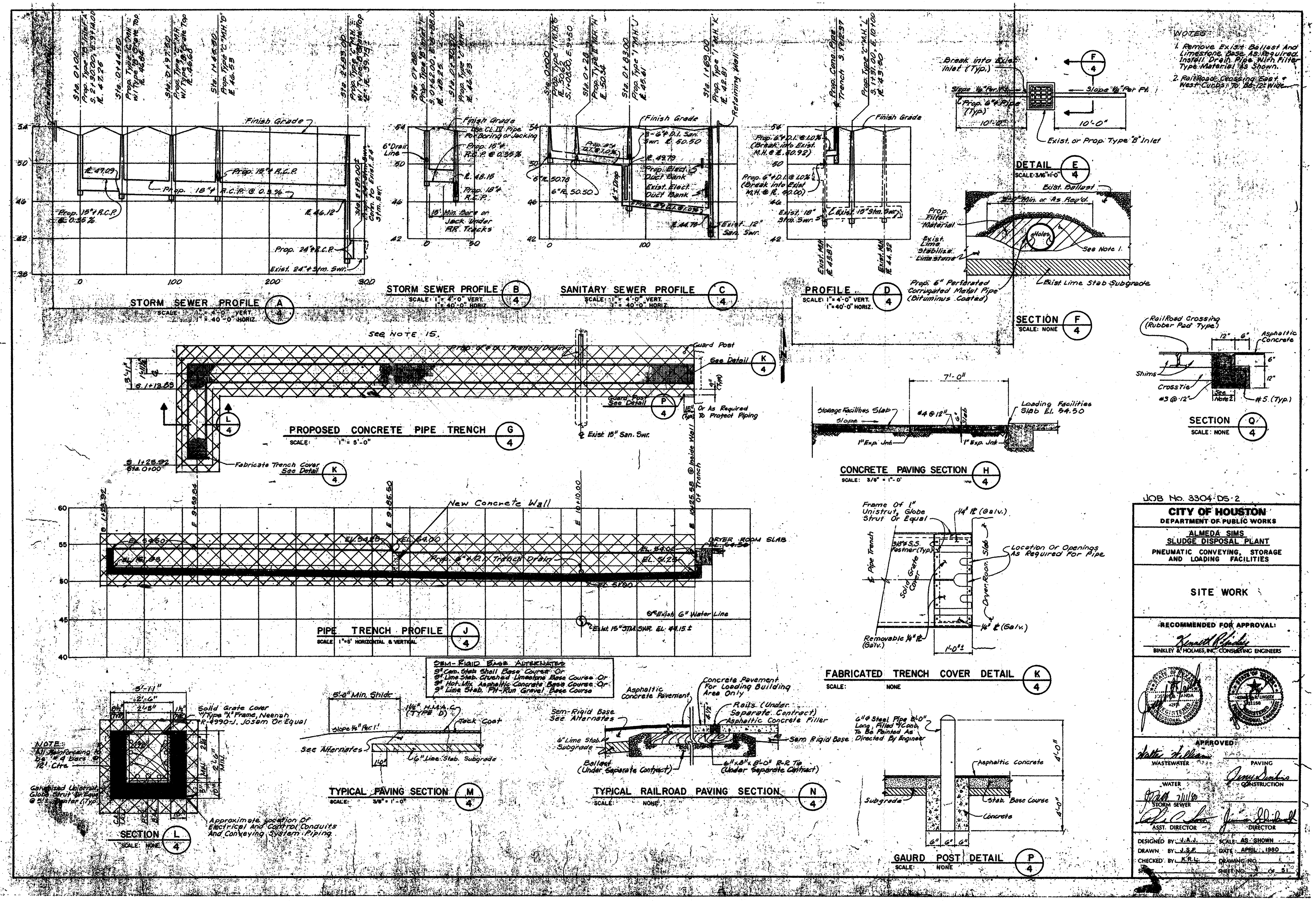

NOTES:

1. ALL FACILITIES SHOWN ARE EXISTING UNLESS OTHERWISE NOTED. DATA SHOWN FOR EXISTING FACILITIES IS TAKEN FROM CITY OF HOUSTON RECORD DRAWINGS. CONTRACTOR SHALL FIELD VERIFY ALL DIMENSIONS, ELEVATIONS AND ALL OTHER DATA PRIOR TO START OF WORK AND PROMPTLY BRING DEVIATIONS TO ENGINEER'S ATTENTION.
2. DEMOLITION AND SEQUENCE OF CONSTRUCTION SHALL BE AS PER THE CONTRACT DOCUMENTS.
3. CROSS HATCHING IS USED TO INDICATE SCHEMATICALLY THE ITEMS TO BE REMOVED DURING THIS PHASE. THE CONTRACTOR SHALL LOCATE PIPING CONNECTIONS AND UTILIZE PIPING JOINTS WHERE POSSIBLE TO INTERCEPT THE EXISTING PIPING TO FACILITATE CONNECTION TO NEW PROCESS LINES.
4. REMOVE ALL EXPOSED REBAR AND ANCHOR BOLTS WHICH ARE TO BE REMOVED A MINIMUM OF 1-1/2 INCHES BELOW SURFACE OF REMAINING CONCRETE. FILL ALL VOIDS WITH GROUT CONTAINING A LATEX BONDING AGENT IN ACCORDANCE WITH THE SPECIFICATIONS. GROUTING OPERATIONS SHALL PRODUCE AN EVEN FINISH VERTICALLY PLUMB TO RECEIVE THE NEW FRAMING. THE GROUTING OPERATION SHALL NOT REDUCE THE SIZE OF OPENINGS.
5. CONTRACTOR SHALL PROPERLY AND THOROUGHLY CLEAN ALL CONCRETE, PIPE AND OTHER APPURTENANCES THAT SHALL REMAIN.
6. REMOVE ALL ELECTRICAL AND INSTRUMENT CONDUIT, WIRING AND CABLE, TO THE POINT OF ORIGIN ASSOCIATED WITH ALL EQUIPMENT AND INSTRUMENTATION REMOVED.
7. REMOVE ALL PIPING ASSOCIATED WITH DEMOLISHED EQUIPMENT UNLESS OTHERWISE NOTED.
8. SOME OF THE PIPING AND EQUIPMENT SHOWN TO BE DEMOLISHED HAS BEEN PREVIOUSLY REMOVED OR PARTIALLY DISMANTLED. THE CONTRACTOR SHALL REMOVE ALL REMAINING. EQUIPMENT , PIPING AND CONCRETE PEDESTALS.
9. THE CONTRACTOR SHALL REMOVE ALL SURPLUS CONCRETE PEDESTALS TO A MINIMUM OF 1-1/2" BELOW THE SURFACE OF THE EXISTING FLOOR AND ALL SURFACES SHALL BE REPAIRED USING GROUT CONTAINING A LATEX BONDING AGENT IN ACCORDANCE WITH THE SPECIFICATIONS. UNDERGROUND FACILITIES SHOWN TO BE DEMOLISHED MAY BE FILLED, PLUGGED, AND ABANDONED IN PLACE OR REMOVED FORM THE SITE UNLESS SPECIFICALLY NOTED TO BE REMOVED.
10. ALL UNDERGROUND FACILITIES SHOWN TO BE DEMOLISHED MAY BE FILLED, PLUGGED, AND ABANDONED IN PLACE UNLESS SPECIFICALLY NOTED TO BE REMOVED.
11. PRESERVE AND PROTECT REBAR WHERE IT IS SHOWN TO BE REUSED. DO NOT OVERCUT CORNERS OF OPENINGS. DO NOT CUT THE REBAR AS THE CONCRETE IS BEING REMOVED. USE BONDING AGENT AND PREMOLDED SELF-ADHESIVE WATERSTOP WHERE CONDITIONS REQUIRE THEIR USE.
12. ALL PIPE HANGERS MOUNTING BRACKETS ARE TO BE LEFT IN PLACE.
13. WHERE DEMOLTION ACTIVITIES LEAVE ANY OPENINGS IN THE GRATING, WALKWAYS, OR WORK PLATFORMS LARGER THAN 3 INCHES, GRATING SHALL BE INSTALLED TO COVER THE OPENING. THE GRATING MUST MATCH THE EXISTING GRATING AND MUST NOT PRESENT A TRIP HAZARD.
14. THE BELOW GRADE DRAIN PIPES AND SURFACE INLETS SHALL REMAIN IN PLACE AND OPERATIONAL.
15. COMPLETE DEMOLITION OF TRENCH IS REQUIRED TO PROVIDE SPACE FOR NEW FOUNDATIONS IN THE AREAS MARKED.
16. REROUTE ELECTRICAL AND CONTROL CONDUITS AND THE SINGLE INSTRUMENT AIR LINE TO REMAIN FROM THE TRENCH TO THE NEW OVERHEAD WALKWAY. REMOVE ALL UNUSED PNEUMATIC CONVEYING PIPING. CONTROL WIRING INCLUDES TEMPERATURE AND LEVEL WIRING FOR ALL 8 SILOS. THESE ARE TO BE REINSTALLED WHEN COMPLETED.

PRIVATE UTILITY LINES SHOWN

ENTEX, INC.

SOUTHWESTERN BELL TELEPHONE COMPANY
Valid for one year only.

HOUSTON LIGHTING & POWER CO.
Approval only for crossing underground ductlines unless noted. Valid for one year only.

REV NO	DESCRIPTION	APP'D	DATE

SEAL — AS-BUILT — 1/25/02

SEAL

RATNALA & BAHL, INC.
Engineers • Architects • Surveyors
11767 KATY FREEWAY, SUITE 510
HOUSTON, TEXAS 77079

CH2M HILL
7600 West Tidwell Road, Suite 400
Houston Tx 77040
713.462.0161

Binkley & Barfield, Inc.
Consulting Engineers
1710 Seamist Drive Houston, Texas 77008

ALMEDA SIMS
BIOSOLIDS
DRYER REHABILITATION

CIP NO 0298-05-3
FILE NO: 4289-4

DEMOLITION PLAN
SITE WORK
PLAN & SECTIONS

CITY OF HOUSTON
DEPARTMENT OF PUBLIC WORKS AND ENGINEERING
ENGINEERING, CONSTRUCTION AND REAL ESTATE GROUP

SECTION APPROVALS

WATER ENGINEERING — TRAFFIC AND SIGNAL ENGINEERING

WASTEWATER ENGINEERING 2-25-99 — STREET & BRIDGE ENGINEERING

STORMWATER ENGINEERING — CONSTRUCTION 3/2/99

2/25/99

OTHER DEPARTMENTS

PLANNING AND DEVELOPMENT — SPONSOR DEPARTMENT

CITY ENGINEER — DATE 3-2-99

DIRECTOR OF PUBLIC WORKS AND ENGINEERING — DATE 3/5/99

SUBMITTED:
SCALE: AS NOTED
DATE:
SURVEY BY: N/A
F B NO:

DESIGNED BY: WLW
DRAWN BY: WLW
DWG. NO. : D-21
SHT NO 97 of 159 SHTS
CITY DWG NO: 35001

CADD DWG FILE NO :F:/64305/NONE
FILE DATE--OPERATOR: NONE

ORIGINAL SCALE IN INCHES FOR REDUCED PLANS

CADD DWG FILE NO :F:/64305/NONE
FILE DATE-OPERATOR: NONE

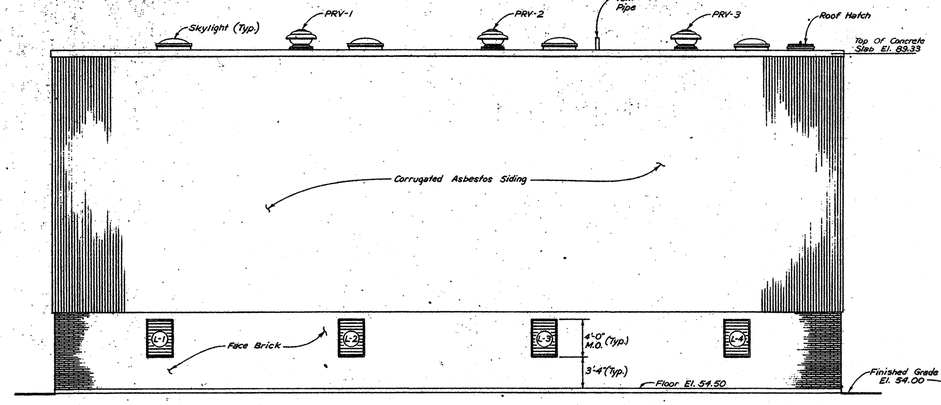

NORTH ELEVATION

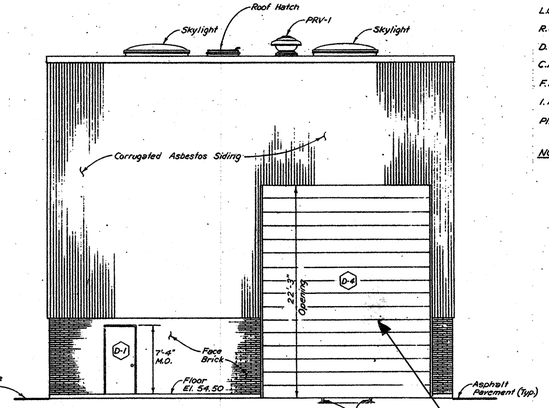

EAST ELEVATION

NOTE:
REPAIR ROLL-UP DOORS TO INCLUDE ALL CONTROLS AND SAFETY DEVICES.

LEGEND

M.C.L. Mixer Conveying Line
R.C.L. Production Conveying Line
L.C.L. Loading Conveying Line
R.C.L. Recirculation Conveying Line
D.V.L. Dust Vent Line
C.A.L. Conveying Air Line
F.A.L. Fluidizing Air Line
I.A.L. Instrument Air Line
Plt. Air Plant Air

NOTES:

1. See Door Schedule on Sheet No. 32 for additional information on Doors.
2. See Sheet No. 33 for PWF Ventilation Fans Details and for Window and Louver Schedule and Details.
3. See Sheet No. 36, "Plumbing And HVAC Isometrics" for routing of air and water lines, and for heating, and Air Conditioning.

NOTE:
ADD NEW DOOR OPENING. REMOVE EXISTING CORRUGATED ASBESTOS SIDING AND CMU BACKUP.

NOTE:
REMOVE EXISTING PIPES AS MARKED ON DWG D-24. REPLACE SS ENTRY PLATE AS REQUIRED. RELOCATE 2" AIR & ELEC. TO NEW WALKWAY.

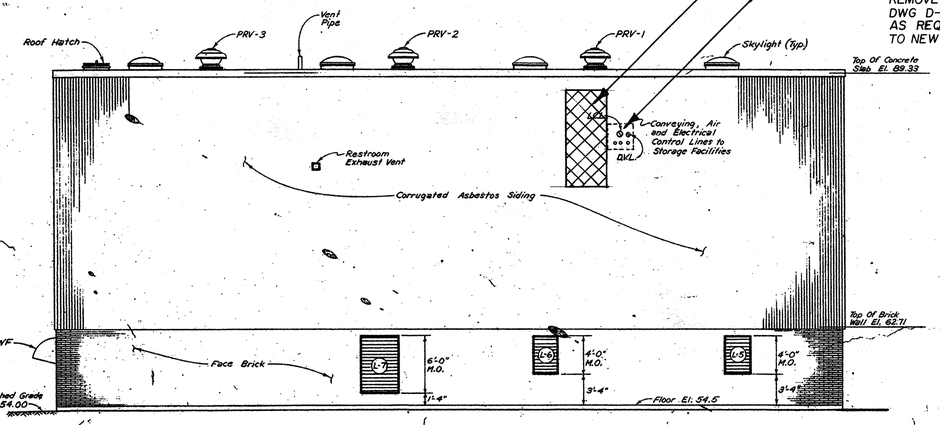

SOUTH ELEVATION

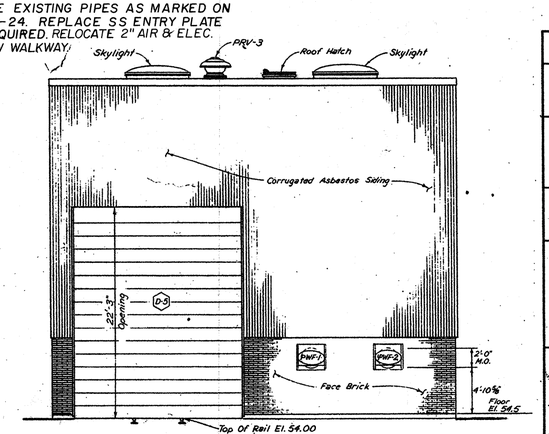

WEST ELEVATION

SCALE: 3 IN. = 1 FT.
SCALE: ½ IN. = 1 FT.

ORIGINAL SCALE IN INCHES FOR REDUCED PLANS
0 1 2 3

NOTES:

1. ALL FACILITIES SHOWN ARE EXISTING UNLESS OTHERWISE NOTED. DATA SHOWN FOR EXISTING FACILITIES IS TAKEN FROM CITY OF HOUSTON RECORD DRAWINGS. CONTRACTOR SHALL FIELD VERIFY ALL DIMENSIONS, ELEVATIONS AND ALL OTHER DATA PRIOR TO START OF WORK AND PROMPTLY BRING DEVIATIONS TO ENGINEER'S ATTENTION.
2. DEMOLITION AND SEQUENCE OF CONSTRUCTION SHALL BE AS PER THE CONTRACT DOCUMENTS.
3. CROSS HATCHING IS USED TO INDICATE SCHEMATICALLY THE ITEMS TO BE REMOVED DURING THIS PHASE. THE CONTRACTOR SHALL LOCATE PIPING CONNECTIONS AND UTILIZE PIPING JOINTS WHERE POSSIBLE TO INTERCEPT THE EXISTING PIPING TO FACILITATE CONNECTION TO NEW PROCESS LINES.
4. REMOVE ALL EXPOSED REBAR AND ANCHOR BOLTS WHICH ARE TO BE REMOVED A MINIMUM OF 1-1/2 INCHES BELOW SURFACE OF REMAINING CONCRETE. FILL ALL VOIDS WITH GROUT CONTAINING A LATEX BONDING AGENT IN ACCORDANCE WITH THE SPECIFICATIONS. GROUTING OPERATIONS SHALL PRODUCE AN EVEN FINISH VERTICALLY PLUMB TO RECEIVE THE NEW FRAMING. THE GROUTING OPERATION SHALL NOT REDUCE THE SIZE OF OPENINGS.
5. CONTRACTOR SHALL PROPERLY AND THOROUGHLY CLEAN ALL CONCRETE, PIPE AND OTHER APPURTENANCES THAT SHALL REMAIN.
6. REMOVE ALL ELECTRICAL AND INSTRUMENT CONDUIT, WIRING AND CABLE, TO THE POINT OF ORIGIN ASSOCIATED WITH ALL EQUIPMENT AND INSTRUMENTATION REMOVED.
7. REMOVE ALL PIPING ASSOCIATED WITH DEMOLISHED EQUIPMENT UNLESS OTHERWISE NOTED.
8. SOME OF THE PIPING AND EQUIPMENT SHOWN TO BE DEMOLISHED HAS BEEN PREVIOUSLY REMOVED OR PARTIALLY DISMANTLED. THE CONTRACTOR SHALL REMOVE ALL REMAINING EQUIPMENT, PIPING AND CONCRETE PEDESTALS.
9. THE CONTRACTOR SHALL REMOVE ALL SURPLUS CONCRETE PEDESTALS TO A MINIMUM OF 1-1/2" BELOW THE SURFACE OF THE EXISTING FLOOR AND ALL SURFACES SHALL BE REPAIRED USING GROUT CONTAINING A LATEX BONDING AGENT IN ACCORDANCE WITH THE SPECIFICATIONS. UNDERGROUND FACILITIES SHOWN TO BE DEMOLISHED MAY BE FILLED, PLUGGED, AND ABANDONED IN PLACE OR REMOVED FORM THE SITE UNLESS SPECIFICALLY NOTED TO BE REMOVED.
10. ALL UNDERGROUND FACILITIES SHOWN TO BE DEMOLISHED MAY BE FILLED, PLUGGED, AND ABANDONED IN PLACE UNLESS SPECIFICALLY NOTED TO BE REMOVED.
11. PRESERVE AND PROTECT REBAR WHERE IT IS SHOWN TO BE REUSED. DO NOT OVERCUT CORNERS OF OPENINGS. DO NOT CUT THE REBAR AS THE CONCRETE IS BEING REMOVED. USE BONDING AGENT AND PREMOLDED SELF-ADHESIVE WATERSTOP WHERE CONDITIONS REQUIRE THEIR USE.
12. ALL PIPE HANGERS MOUNTING BRACKETS ARE TO BE LEFT IN PLACE.
13. WHERE DEMOLTION ACTIVITIES LEAVE ANY OPENINGS IN THE GRATING, WALKWAYS, OR WORK PLATFORMS LARGER THAN 3 INCHES, GRATING SHALL BE INSTALLED TO COVER THE OPENING. THE GRATING MUST MATCH THE EXISTING GRATING AND MUST NOT PRESENT A TRIP HAZARD.
14. THE BELOW GRADE DRAIN PIPES AND SURFACE INLETS SHALL REMAIN IN PLACE AND OPERATIONAL.
15. PREVIOUS PROJECT RECORDS INDICATE THAT ASBESTOS MATERIAL WAS USED IN THE FABRICATION OF THE SIDING AND IT MAY BE PRESENT IN OTHER PLACES IN THE BUILDING AND THE SILOS. THE CONTRACTOR MUST TAKE ADEQUATE PRECAUTION AND APPROPRIATE MEASURES TO SAFEGUARD PEOPLE AND ADHERE TO ALL APPLICABLE REGULATIONS.

JOB NO. 3304-DS-2

CITY OF HOUSTON
DEPARTMENT OF PUBLIC WORKS

ALMEDA SIMS SLUDGE DISPOSAL PLANT
PNEUMATIC CONVEYING, STORAGE AND LOADING FACILITIES

LOADING FACILITIES ELEVATIONS

RECOMMENDED FOR APPROVAL:
BINKLEY & HOLMES, INC. CONSULTING ENGINEERS

APPROVED:
WASTEWATER
PAVING
WATER
CONSTRUCTION
STORM SEWER
ASST. DIRECTOR
DIRECTOR

DESIGNED BY J.A.J. SCALE: 3/16"=1'-0"
DRAWN BY G.A.S. DATE: APRIL 1980
CHECKED BY K.R.L. DRAWING NO.
SHEET SHEET NO. 10 OF 31

PRIVATE UTILITY LINES SHOWN

ENTEX, INC.

SOUTHWESTERN BELL TELEPHONE COMPANY
Valid for one year only.

HOUSTON LIGHTING & POWER CO.
Approval only for crossing underground ductlines unless noted. Valid for one year only.

REV NO	DESCRIPTION	APP'D	DATE

SEAL
AS-BUILT
1/25/02

SEAL
STATE OF TEXAS
KENNETH R. LINDSEY
RATNALA
PROFESSIONAL ENGINEER
2/24/99

RATNALA & BAHL, INC.
Engineers • Architects • Surveyors
11767 KATY FREEWAY, SUITE 510
HOUSTON, TEXAS 77079

CH2M HILL
7600 West Tidwell Road, Suite 400
Houston Tx 77040
713.462.0161

Binkley & Barfield, Inc.
Consulting Engineers
1710 Seamist Drive Houston, Texas 77008

ALMEDA SIMS BIOSOLIDS DRYER REHABILITATION

CIP NO 0298-05-3
FILE NO: 4289-4

DEMOLITION PLAN
LOADING FACILITIES
EXTERIOR ELEVATIONS

CITY OF HOUSTON
DEPARTMENT OF PUBLIC WORKS AND ENGINEERING
ENGINEERING, CONSTRUCTION AND REAL ESTATE GROUP

SECTION APPROVALS

WATER ENGINEERING
TRAFFIC AND SIGNAL ENGINEERING
WASTEWATER ENGINEERING
STREET & BRIDGE ENGINEERING
STORMWATER ENGINEERING
CONSTRUCTION 3/2/99

OTHER DEPARTMENTS

PLANNING AND DEVELOPMENT
SPONSOR DEPARTMENT
CITY ENGINEER 3-2-99 DATE
DIRECTOR OF PUBLIC WORKS AND ENGINEERING 3/5/99 DATE

SUBMITTED:
SCALE: AS NOTED
DATE:
SURVEY BY: N/A
F B NO:

DESIGNED BY: W.L.W
DRAWN BY: W.L.W
DWG. NO. : D-22
SHT NO 98 of 159 SHTS
CITY DWG NO: 35001

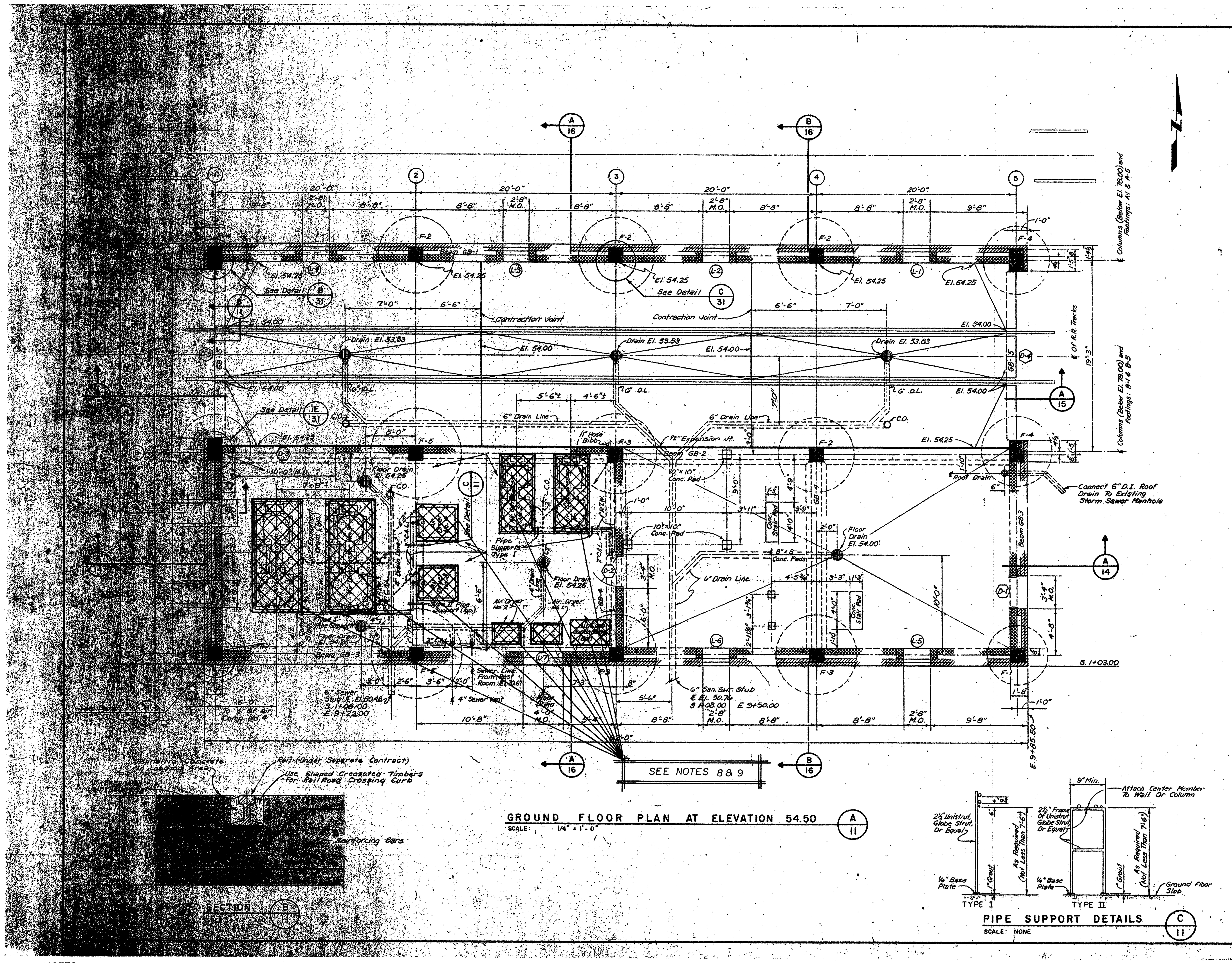

GROUND FLOOR PLAN AT ELEVATION 54.50 (A/11)
SCALE: 1/4" = 1'-0"

PIPE SUPPORT DETAILS (C/11)
SCALE: NONE

SEE NOTES 8 & 9

GENERAL NOTES

1. Loading area floor drains shall be Josam #34526, Zurn or equal.
2. Compressor Room floor drains shall be, Josam #32004, Zurn or equal.
3. Air gaps for cooling and condensate drains shall be Josam #1800, Zurn or equal.
4. "P" Traps for floor drains and equipment drains shall be Josam #1950, Zurn or equal.
5. Locate floor drains between R.R. Track flgs. Adjust East-West location as required.
6. Accoustical CMU's in Compressor Room walls except at horizontal and vertical steel bar reinforcement locations.

JOB No. 3304-DS-2

CITY OF HOUSTON
DEPARTMENT OF PUBLIC WORKS
ALMEDA SIMS
SLUDGE DISPOSAL PLANT
PNEUMATIC CONVEYING, STORAGE AND LOADING FACILITIES

LOADING FACILITIES
GROUND FLOOR PLAN

RECOMMENDED FOR APPROVAL:
BINKLEY & HOLMES, INC. CONSULTING ENGINEERS

APPROVED:
WASTEWATER | PAVING
WATER | CONSTRUCTION
STORM SEWER |
ASST. DIRECTOR | DIRECTOR

DESIGNED BY: J.A.J. & J.L.R. SCALE: AS SHOWN
DRAWN BY: G.A.S. DATE: APRIL 1980
CHECKED BY: K.R.L. DRAWING NO.
SHEET ... SHEET NO. 11 OF 51

NOTES:

1. ALL FACILITIES SHOWN ARE EXISTING UNLESS OTHERWISE NOTED. DATA SHOWN FOR EXISTING FACILITIES IS TAKEN FROM CITY OF HOUSTON RECORD DRAWINGS. CONTRACTOR SHALL FIELD VERIFY ALL DIMENSIONS, ELEVATIONS AND ALL OTHER DATA PRIOR TO START OF WORK AND PROMPTLY BRING DEVIATIONS TO ENGINEER'S ATTENTION.
2. DEMOLITION AND SEQUENCE OF CONSTRUCTION SHALL BE AS PER THE CONTRACT DOCUMENTS.
3. CROSS HATCHING IS USED TO INDICATE SCHEMATICALLY THE ITEMS TO BE REMOVED DURING THIS PHASE. THE CONTRACTOR SHALL LOCATE PIPING CONNECTIONS AND UTILIZE PIPING JOINTS WHERE POSSIBLE TO INTERCEPT THE EXISTING PIPING TO FACILITATE CONNECTION TO NEW PROCESS LINES.
4. REMOVE ALL EXPOSED REBAR AND ANCHOR BOLTS WHICH ARE TO BE REMOVED A MINIMUM OF 1-1/2 INCHES BELOW SURFACE OF REMAINING CONCRETE. FILL ALL VOIDS WITH GROUT CONTAINING A LATEX BONDING AGENT IN ACCORDANCE WITH THE SPECIFICATIONS. GROUTING OPERATIONS SHALL PRODUCE AN EVEN FINISH VERTICALLY PLUMB TO RECEIVE THE NEW FRAMING. THE GROUTING OPERATION SHALL NOT REDUCE THE SIZE OF OPENINGS.
5. CONTRACTOR SHALL PROPERLY AND THOROUGHLY CLEAN ALL CONCRETE, PIPE AND OTHER APPURTENANCES THAT SHALL REMAIN.
6. REMOVE ALL ELECTRICAL AND INSTRUMENT CONDUIT, WIRING AND CABLE, TO THE POINT OF ORIGIN ASSOCIATED WITH ALL EQUIPMENT AND INSTRUMENTATION REMOVED.
7. REMOVE ALL PIPING ASSOCIATED WITH DEMOLISHED EQUIPMENT UNLESS OTHERWISE NOTED.
8. SOME OF THE PIPING AND EQUIPMENT SHOWN TO BE DEMOLISHED HAS BEEN PREVIOUSLY REMOVED OR PARTIALLY DISMANTLED. THE CONTRACTOR SHALL REMOVE ALL REMAINING. EQUIPMENT, PIPING AND CONCRETE PEDESTALS.
9. THE CONTRACTOR SHALL REMOVE ALL SURPLUS CONCRETE PEDESTALS TO A MINIMUM OF 1-1/2" BELOW THE SURFACE OF THE EXISTING FLOOR AND ALL SURFACES SHALL BE REPAIRED USING GROUT CONTAINING A LATEX BONDING AGENT IN ACCORDANCE WITH THE SPECIFICATIONS. UNDERGROUND FACILITIES SHOWN TO BE DEMOLISHED MAY BE FILLED, PLUGGED, AND ABANDONED IN PLACE OR REMOVED FORM THE SITE UNLESS SPECIFICALLY NOTED TO BE REMOVED.
10. ALL UNDERGROUND FACILITIES SHOWN TO BE DEMOLISHED MAY BE FILLED, PLUGGED, AND ABANDONED IN PLACE UNLESS SPECIFICALLY NOTED TO BE REMOVED.
11. PRESERVE AND PROTECT REBAR WHERE IT IS SHOWN TO BE REUSED. DO NOT OVERCUT CORNERS OF OPENINGS. DO NOT CUT THE REBAR AS THE CONCRETE IS BEING REMOVED. USE BONDING AGENT AND PREMOLDED SELF-ADHESIVE WATERSTOP WHERE CONDITIONS REQUIRE THEIR USE.
12. ALL PIPE HANGERS MOUNTING BRACKETS ARE TO BE LEFT IN PLACE.
13. WHERE DEMOLTION ACTIVITIES LEAVE ANY OPENINGS IN THE GRATING, WALKWAYS, OR WORK PLATFORMS LARGER THAN 3 INCHES, GRATING SHALL BE INSTALLED TO COVER THE OPENING. THE GRATING MUST MATCH THE EXISTING GRATING AND MUST NOT PRESENT A TRIP HAZARD.
14. THE BELOW GRADE DRAIN PIPES AND SURFACE INLETS SHALL REMAIN IN PLACE AND OPERATIONAL.

CADD DWG FILE NO :F:/64305/NONE FILE DATE: OPERATOR: NONE

ORIGINAL SCALE IN INCHES FOR REDUCED PLANS

PRIVATE UTILITY LINES SHOWN
ENTEX, INC.
SOUTHWESTERN BELL TELEPHONE COMPANY Valid for one year only.
HOUSTON LIGHTING & POWER CO. Approval only for crossing underground ductlines unless noted. Valid for one year only.

REV NO	DESCRIPTION	APP'D	DATE

SEAL: AS-BUILT 1/25/02

RATNALA & BAHL, INC.
Engineers • Architects • Surveyors
11767 KATY FREEWAY, SUITE 510
HOUSTON, TEXAS 77079

CH2M HILL
7600 West Tidwell Road, Suite 400
Houston Tx 77040
713.462.0161

Binkley & Barfield, Inc.
Consulting Engineers
1710 Seamist Drive Houston, Texas 77008

ALMEDA SIMS
BIOSOLIDS
DRYER REHABILITATION

CIP NO 0298-05-3
FILE NO: 4289-4
DEMOLITION PLAN
GROUND FLOOR PLAN
LOADING FACILITIES

CITY OF HOUSTON
DEPARTMENT OF PUBLIC WORKS AND ENGINEERING
ENGINEERING, CONSTRUCTION AND REAL ESTATE GROUP

SECTION APPROVALS
WATER ENGINEERING | TRAFFIC AND SIGNAL ENGINEERING
WASTEWATER ENGINEERING 2-25-99 | STREET & BRIDGE ENGINEERING
STORMWATER ENGINEERING 2/25/99 | CONSTRUCTION

OTHER DEPARTMENTS
PLANNING AND DEVELOPMENT | SPONSOR DEPARTMENT
CITY ENGINEER 3-2-99 DATE
DIRECTOR OF PUBLIC WORKS AND ENGINEERING 3/5/99 DATE

SUBMITTED:
SCALE: AS NOTED
DATE:
SURVEY BY: N/A
F B NO:
DESIGNED BY: WLW
DRAWN BY: WLW
DWG. NO. : D-23
SHT NO 99 of 159 SHTS
CITY DWG NO: 35001

CADD DWG FILE NO :F:/64305/NONE FILE DATE—OPERATOR: NONE

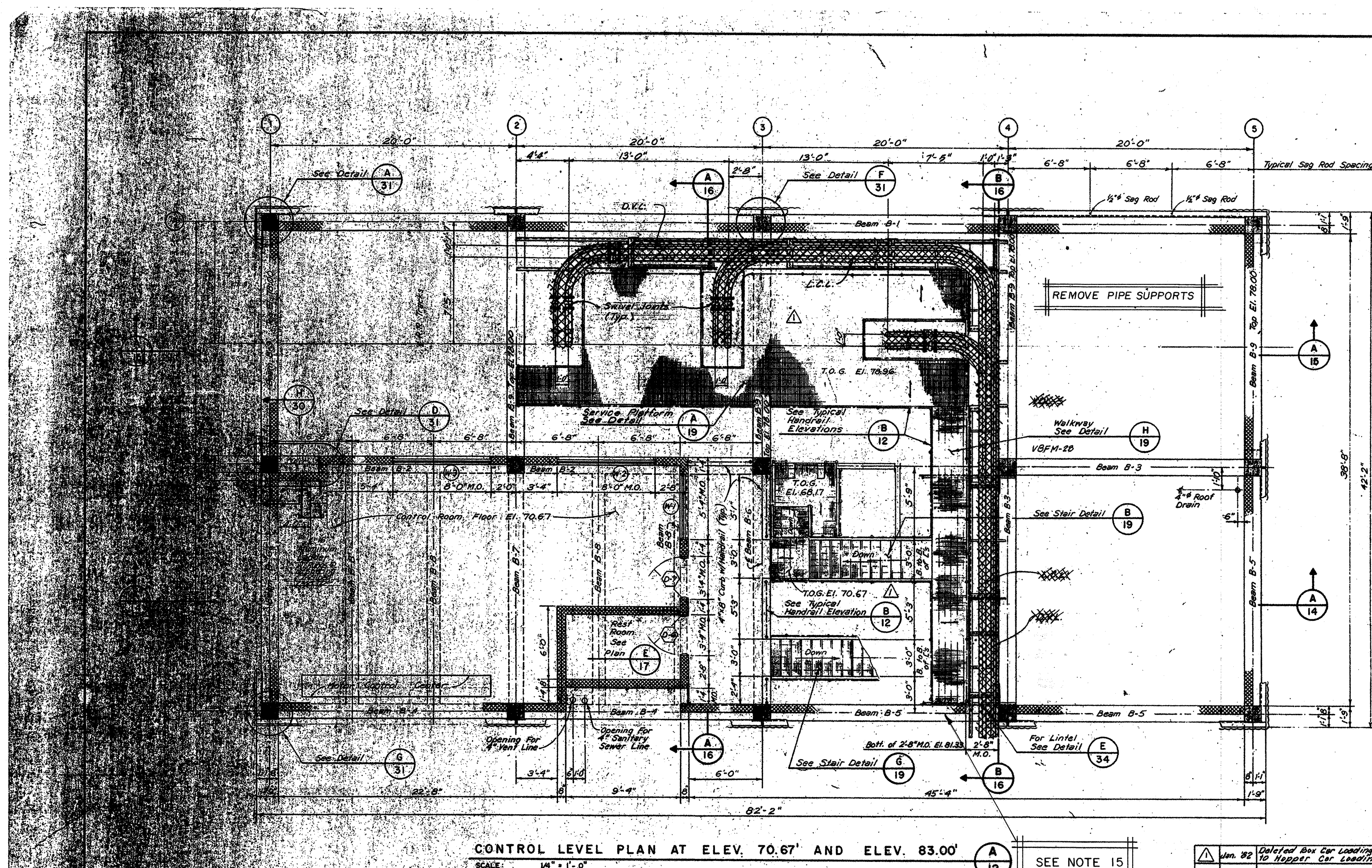

ROOM DESIGNATION	CEILING: ACOUSTICAL 2'x4' LAYIN	CEILING: EXPOSED STR.	CEILING: HEIGHT	WALLS: STANDARD CMU PAINTED	WALLS: ACOUSTICAL CMU UNPAINTED	WALLS: GLAZED CMU	WALLS: STANDARD CMU UNPAINTED	FLOOR: TROWELED, SLIP RESISTANT CONC.	FLOOR: VINYL ASBESTOS TILE	REMARKS
CONTROL ROOM	X	–	10'-0"	–	–	X	–	–	X	
REST ROOM	X	–	8'-0"	–	–	X	–	–	X	
COMPRESSOR ROOM	–	X	–	–	X	–	X	X	–	SEE NOTE 1. BELOW
LOADING AREA	–	X	–	X	–	–	–	X	–	

NOTE:
1. Accoustical CMU's in Compressor Room wall except at horizontal and vertical bar reinforcement locations.

JOB No. 3304-DS-2

SEE NOTE 15

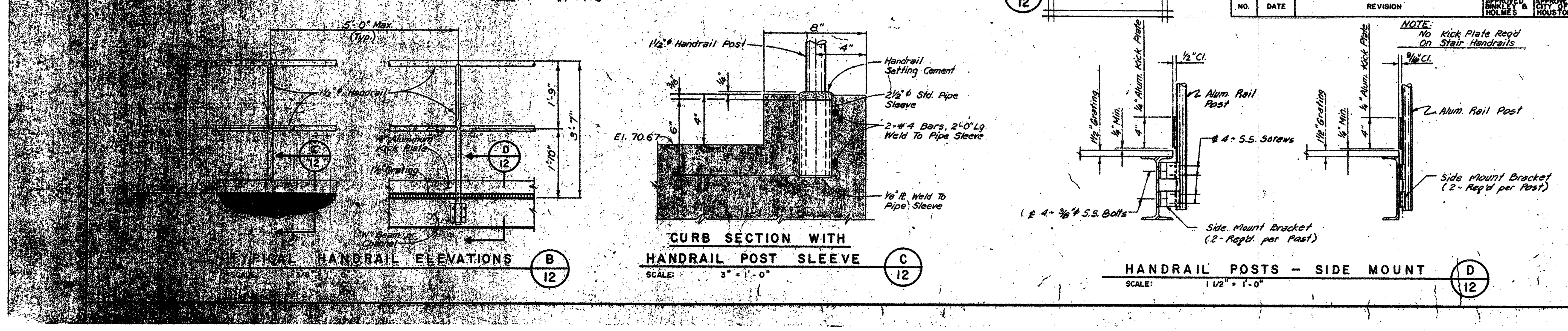

NO.	DATE	REVISION	APPROVED BINKLEY & HOLMES	APPROVED CITY OF HOUSTON
1	Jan. '82	Deleted Box Car Loading & Modification to Hopper Car Loading		

CITY OF HOUSTON
DEPARTMENT OF PUBLIC WORKS
ALMEDA SIMS SLUDGE DISPOSAL PLANT
PNEUMATIC CONVEYING, STORAGE AND LOADING FACILITIES
LOADING FACILITIES
CONTROL LEVEL FLOOR PLAN
RECOMMENDED FOR APPROVAL:
BINKLEY & HOLMES, INC. CONSULTING ENGINEERS
APPROVED:
WASTEWATER — PAVING
WATER — CONSTRUCTION
STORM SEWER
ASST. DIRECTOR — DIRECTOR
DESIGNED BY: J.A.J. & J.L.R. SCALE: AS SHOWN
DRAWN BY: G.A.S. DATE: APRIL 1980
CHECKED BY: K.R.L. DRAWING NO.
SHEET NO. 12 OF 51

NOTES:

1. ALL FACILITIES SHOWN ARE EXISTING UNLESS OTHERWISE NOTED. DATA SHOWN FOR EXISTING FACILITIES IS TAKEN FROM CITY OF HOUSTON RECORD DRAWINGS. CONTRACTOR SHALL FIELD VERIFY ALL DIMENSIONS, ELEVATIONS AND ALL OTHER DATA PRIOR TO START OF WORK AND PROMPTLY BRING DEVIATIONS TO ENGINEER'S ATTENTION.
2. DEMOLITION AND SEQUENCE OF CONSTRUCTION SHALL BE AS PER THE CONTRACT DOCUMENTS.
3. CROSS HATCHING IS USED TO INDICATE SCHEMATICALLY THE ITEMS TO BE REMOVED DURING THIS PHASE. THE CONTRACTOR SHALL LOCATE PIPING CONNECTIONS AND UTILIZE PIPING JOINTS WHERE POSSIBLE TO INTERCEPT THE EXISTING PIPING TO FACILITATE CONNECTION TO NEW PROCESS LINES.
4. REMOVE ALL EXPOSED REBAR AND ANCHOR BOLTS WHICH ARE TO BE REMOVED A MINIMUM OF 1-1/2 INCHES BELOW SURFACE OF REMAINING CONCRETE. FILL ALL VOIDS WITH GROUT CONTAINING A LATEX BONDING AGENT IN ACCORDANCE WITH THE SPECIFICATIONS. GROUTING OPERATIONS SHALL PRODUCE AN EVEN FINISH VERTICALLY PLUMB TO RECEIVE THE NEW FRAMING. THE GROUTING OPERATION SHALL NOT REDUCE THE SIZE OF OPENINGS.
5. CONTRACTOR SHALL PROPERLY AND THOROUGHLY CLEAN ALL CONCRETE, PIPE AND OTHER APPURTENANCES THAT SHALL REMAIN.
6. REMOVE ALL ELECTRICAL AND INSTRUMENT CONDUIT, WIRING AND CABLE, TO THE POINT OF ORIGIN ASSOCIATED WITH ALL EQUIPMENT AND INSTRUMENTATION REMOVED.
7. REMOVE ALL PIPING ASSOCIATED WITH DEMOLISHED EQUIPMENT UNLESS OTHERWISE NOTED.
8. SOME OF THE PIPING AND EQUIPMENT SHOWN TO BE DEMOLISHED HAS BEEN PREVIOUSLY REMOVED OR PARTIALLY DISMANTLED. THE CONTRACTOR SHALL REMOVE ALL REMAINING. EQUIPMENT, PIPING AND CONCRETE PEDESTALS.
9. THE CONTRACTOR SHALL REMOVE ALL SURPLUS CONCRETE PEDESTALS TO A MINIMUM OF 1-1/2" BELOW THE SURFACE OF THE EXISTING FLOOR AND ALL SURFACES SHALL BE REPAIRED USING GROUT CONTAINING A LATEX BONDING AGENT IN ACCORDANCE WITH THE SPECIFICATIONS. UNDERGROUND FACILITIES SHOWN TO BE DEMOLISHED MAY BE FILLED, PLUGGED, AND ABANDONED IN PLACE OR REMOVED FORM THE SITE UNLESS SPECIFICALLY NOTED TO BE REMOVED.
10. ALL UNDERGROUND FACILITIES SHOWN TO BE DEMOLISHED MAY BE FILLED, PLUGGED, AND ABANDONED IN PLACE UNLESS SPECIFICALLY NOTED TO BE REMOVED.
11. PRESERVE AND PROTECT REBAR WHERE IT IS SHOWN TO BE REUSED. DO NOT OVERCUT CORNERS OF OPENINGS. DO NOT CUT THE REBAR AS THE CONCRETE IS BEING REMOVED. USE BONDING AGENT AND PREMOLDED SELF-ADHESIVE WATERSTOP WHERE CONDITIONS REQUIRE THEIR USE.
12. ALL PIPE HANGERS MOUNTING BRACKETS ARE TO BE LEFT IN PLACE, UNLESS NOTED OTHERWISE.
13. WHERE DEMOLTION ACTIVITIES LEAVE ANY OPENINGS IN THE GRATING, WALKWAYS, OR WORK PLATFORMS LARGER THAN 3 INCHES, GRATING SHALL BE INSTALLED TO COVER THE OPENING. THE GRATING MUST MATCH THE EXISTING GRATING AND MUST NOT PRESENT A TRIP HAZARD.
14. THE BELOW GRADE DRAIN PIPES AND SURFACE INLETS SHALL REMAIN IN PLACE AND OPERATIONAL.
15. PREVIOUS PROJECT RECORDS INDICATE THAT ASBESTOS MATERIAL WAS USED IN THE FABRICATION OF THE SIDING AND IT MAY BE PRESENT IN OTHER PLACES IN THE BUILDING AND THE SILOS. THE CONTRACTOR MUST TAKE ADEQUATE PRECAUTION AND APPROPRIATE MEASURES TO SAFEGUARD PEOPLE AND ADHERE TO ALL APPLICABLE REGULATIONS.

ORIGINAL SCALE IN INCHES FOR REDUCED PLANS

PRIVATE UTILITY LINES SHOWN

ENTEX, INC.

SOUTHWESTERN BELL TELEPHONE COMPANY
Valid for one year only.

HOUSTON LIGHTING & POWER CO.
Approval only for crossing underground ductlines unless noted. Valid for one year only.

REV NO	DESCRIPTION	APP'D	DATE

SEAL — AS BUILT — Darrel Ross 1/25/02

SEAL

RATNALA & BAHL, INC.
Engineers • Architects • Surveyors
11767 KATY FREEWAY, SUITE 510
HOUSTON, TEXAS 77079

CH2M HILL
7600 West Tidwell Road, Suite 400
Houston Tx 77040
713.462.0161

Binkley & Barfield, Inc.
Consulting Engineers
1710 Seamist Drive Houston, Texas 77008

ALMEDA SIMS
BIOSOLIDS
DRYER REHABILITATION

CIP NO 0298-05-3
FILE NO: 4289-4

DEMOLITION PLAN
CONTROL LEVEL FLOOR PLAN

CITY OF HOUSTON
DEPARTMENT OF PUBLIC WORKS AND ENGINEERING
ENGINEERING, CONSTRUCTION AND REAL ESTATE GROUP

SECTION APPROVALS

WATER ENGINEERING — TRAFFIC AND SIGNAL ENGINEERING
WASTEWATER ENGINEERING 2-25-99 — STREET & BRIDGE ENGINEERING
STORMWATER ENGINEERING — CONSTRUCTION 3/2/99
OTHER DEPARTMENTS
PLANNING AND DEVELOPMENT — SPONSOR DEPARTMENT
CITY ENGINEER — DATE 3-2-99
DIRECTOR OF PUBLIC WORKS AND ENGINEERING — DATE 3/3/99

SUBMITTED:
SCALE: AS NOTED
DATE:
SURVEY BY: N/A
F B NO:
DESIGNED BY: WLW
DRAWN BY: WLW
DWG. NO. : D-24
SHT NO 100 of 159 SHTS
CITY DWG NO: 35001

CADD DWG FILE NO : F:/64305/NONE
FILE DATE--OPERATOR: NONE

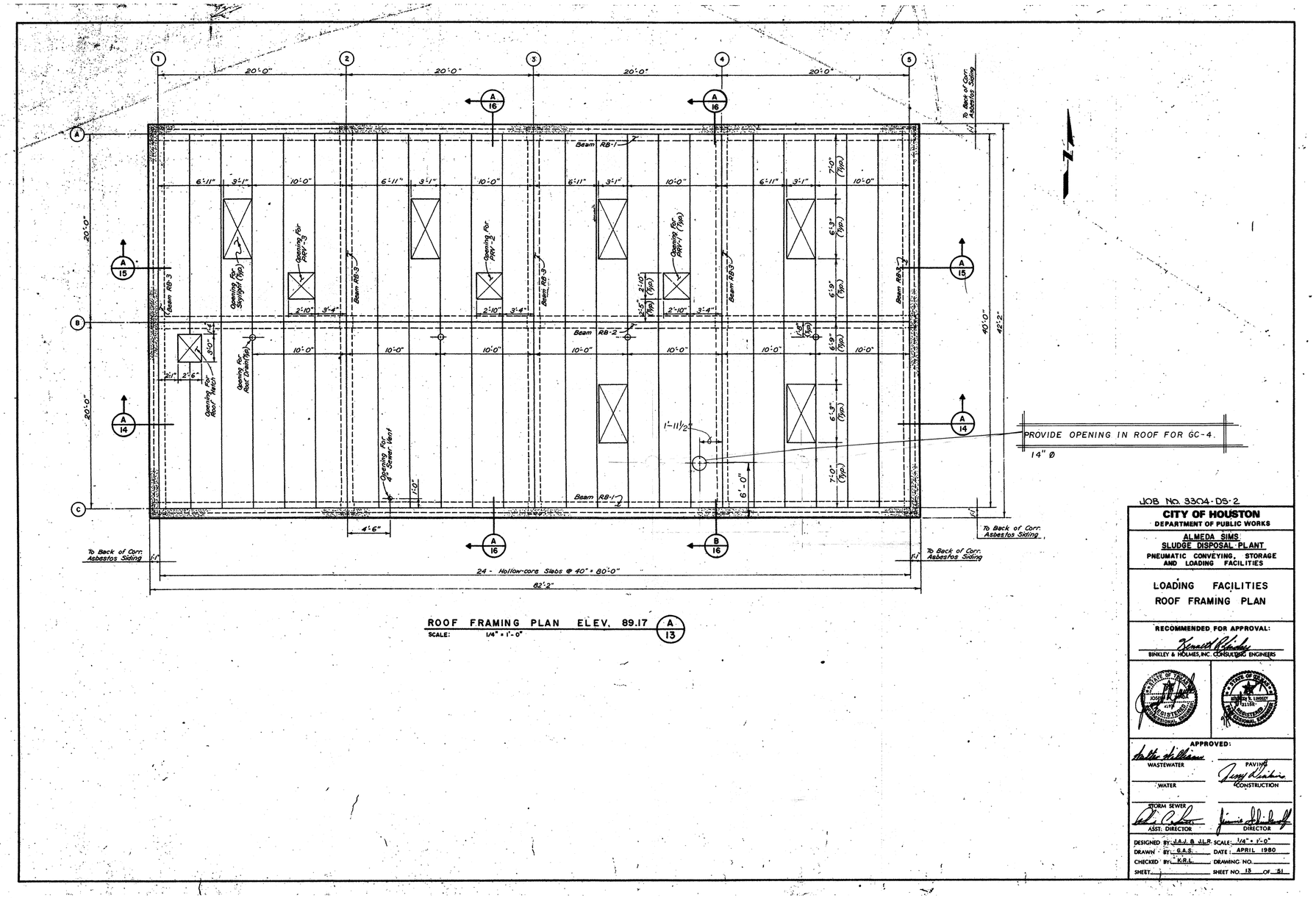

ROOF FRAMING PLAN ELEV. 89.17 (A/13)
SCALE: 1/4" = 1'-0"

SCALE 3 IN. = 1 FT.
SCALE ½ IN. = 1 FT.

ORIGINAL SCALE IN INCHES FOR REDUCED PLANS

NOTES:

1. ALL FACILITIES SHOWN ARE EXISTING UNLESS OTHERWISE NOTED. DATA SHOWN FOR EXISTING FACILITIES IS TAKEN FROM CITY OF HOUSTON RECORD DRAWINGS. CONTRACTOR SHALL FIELD VERIFY ALL DIMENSIONS, ELEVATIONS AND ALL OTHER DATA PRIOR TO START OF WORK AND PROMPTLY BRING DEVIATIONS TO ENGINEER'S ATTENTION.
2. DEMOLITION AND SEQUENCE OF CONSTRUCTION SHALL BE AS PER THE CONTRACT DOCUMENTS.
3. CROSS HATCHING IS USED TO INDICATE SCHEMATICALLY THE ITEMS TO BE REMOVED DURING THIS PHASE. THE CONTRACTOR SHALL LOCATE PIPING CONNECTIONS AND UTILIZE PIPING JOINTS WHERE POSSIBLE TO INTERCEPT THE EXISTING PIPING TO FACILITATE CONNECTION TO NEW PROCESS LINES.
4. REMOVE ALL EXPOSED REBAR AND ANCHOR BOLTS WHICH ARE TO BE REMOVED A MINIMUM OF 1-1/2 INCHES BELOW SURFACE OF REMAINING CONCRETE. FILL ALL VOIDS WITH GROUT CONTAINING A LATEX BONDING AGENT IN ACCORDANCE WITH THE SPECIFICATIONS. GROUTING OPERATIONS SHALL PRODUCE AN EVEN FINISH VERTICALLY PLUMB TO RECEIVE THE NEW FRAMING. THE GROUTING OPERATION SHALL NOT REDUCE THE SIZE OF OPENINGS.
5. CONTRACTOR SHALL PROPERLY AND THOROUGHLY CLEAN ALL CONCRETE, PIPE AND OTHER APPURTENANCES THAT SHALL REMAIN.
6. REMOVE ALL ELECTRICAL AND INSTRUMENT CONDUIT, WIRING AND CABLE, TO THE POINT OF ORIGIN ASSOCIATED WITH ALL EQUIPMENT AND INSTRUMENTATION REMOVED.
7. REMOVE ALL PIPING ASSOCIATED WITH DEMOLISHED EQUIPMENT UNLESS OTHERWISE NOTED.
8. SOME OF THE PIPING AND EQUIPMENT SHOWN TO BE DEMOLISHED HAS BEEN PREVIOUSLY REMOVED OR PARTIALLY DISMANTLED. THE CONTRACTOR SHALL REMOVE ALL REMAINING. EQUIPMENT, PIPING AND CONCRETE PEDESTALS.
9. THE CONTRACTOR SHALL REMOVE ALL SURPLUS CONCRETE PEDESTALS TO A MINIMUM OF 1-1/2" BELOW THE SURFACE OF THE EXISTING FLOOR AND ALL SURFACES SHALL BE REPAIRED USING GROUT CONTAINING A LATEX BONDING AGENT IN ACCORDANCE WITH THE SPECIFICATIONS. UNDERGROUND FACILITIES SHOWN TO BE DEMOLISHED MAY BE FILLED, PLUGGED, AND ABANDONED IN PLACE OR REMOVED FORM THE SITE UNLESS SPECIFICALLY NOTED TO BE REMOVED.
10. ALL UNDERGROUND FACILITIES SHOWN TO BE DEMOLISHED MAY BE FILLED, PLUGGED, AND ABANDONED IN PLACE UNLESS SPECIFICALLY NOTED TO BE REMOVED.
11. PRESERVE AND PROTECT REBAR WHERE IT IS SHOWN TO BE REUSED. DO NOT OVERCUT CORNERS OF OPENINGS. DO NOT CUT THE REBAR AS THE CONCRETE IS BEING REMOVED. USE BONDING AGENT AND PREMOLDED SELF-ADHESIVE WATERSTOP WHERE CONDITIONS REQUIRE THEIR USE.
12. ALL PIPE HANGERS MOUNTING BRACKETS ARE TO BE LEFT IN PLACE.
13. WHERE DEMOLTION ACTIVITIES LEAVE ANY OPENINGS IN THE GRATING, WALKWAYS, OR WORK PLATFORMS LARGER THAN 3 INCHES, GRATING SHALL BE INSTALLED TO COVER THE OPENING. THE GRATING MUST MATCH THE EXISTING GRATING AND MUST NOT PRESENT A TRIP HAZARD.
14. THE BELOW GRADE DRAIN PIPES AND SURFACE INLETS SHALL REMAIN IN PLACE AND OPERATIONAL.

JOB No. 3304-DS-2

CITY OF HOUSTON
DEPARTMENT OF PUBLIC WORKS

ALMEDA SIMS
SLUDGE DISPOSAL PLANT
PNEUMATIC CONVEYING, STORAGE AND LOADING FACILITIES

LOADING FACILITIES
ROOF FRAMING PLAN

RECOMMENDED FOR APPROVAL:
Kenneth R. Kinsley
BINKLEY & HOLMES, INC. CONSULTING ENGINEERS

APPROVED:
WASTEWATER
PAVING CONSTRUCTION
WATER
STORM SEWER ASST. DIRECTOR
DIRECTOR

DESIGNED BY: J.A.J. & W.L.W. SCALE: 1/4" = 1'-0"
DRAWN BY: G.A.S. DATE: APRIL 1980
CHECKED BY: K.R.L. DRAWING NO.
SHEET SHEET NO. 13 OF 51

PRIVATE UTILITY LINES SHOWN

ENTEX, INC.

SOUTHWESTERN BELL TELEPHONE COMPANY
Valid for one year only.

HOUSTON LIGHTING & POWER CO.
Approval only for crossing underground ductlines unless noted. Valid for one year only.

REV NO	DESCRIPTION	APP'D	DATE

SEAL
AS-BUILT
1/25/02

SEAL
STATE OF TEXAS
WILLIAM L. WILLIAMS
REGISTERED PROFESSIONAL ENGINEER
2/4/99

RATNALA & BAHL, INC.
Engineers • Architects • Surveyors
11767 KATY FREEWAY, SUITE 510
HOUSTON, TEXAS 77079

CH2M HILL
7600 West Tidwell Road, Suite 400
Houston Tx 77040
713.462.0161

Binkley & Barfield, Inc.
Consulting Engineers
1710 Seamist Drive Houston, Texas 77008

ALMEDA SIMS
BIOSOLIDS
DRYER REHABILITATION

CIP NO 0298-05-3
FILE NO: 4289-4

DEMOLITION PLAN
ROOF FRAMING PLAN

CITY OF HOUSTON
DEPARTMENT OF PUBLIC WORKS AND ENGINEERING
ENGINEERING, CONSTRUCTION AND REAL ESTATE GROUP

SECTION APPROVALS

WATER ENGINEERING
TRAFFIC AND SIGNAL ENGINEERING
WASTEWATER ENGINEERING 2-25-99
STREET & BRIDGE ENGINEERING
STORMWATER ENGINEERING
CONSTRUCTION 3/2/99
2/25/99

OTHER DEPARTMENTS

PLANNING AND DEVELOPMENT
SPONSOR DEPARTMENT
CITY ENGINEER 3-2-99 DATE
DIRECTOR OF PUBLIC WORKS AND ENGINEERING 3/5/99 DATE

SUBMITTED:
SCALE: AS NOTED
DATE:
SURVEY BY: N/A
F B NO:

DESIGNED BY: WLW
DRAWN BY: WLW
DWG. NO. : D-25
SHT NO 101 of 159 SHTS

CITY DWG NO:
35001

CADD DWG FILE NO: F/64305/NONE
FILE DATE--OPERATOR: NONE

NOTES:

1. Supply Duct (6") to Restroom

2. Accoustical CMU's in Compressor Room walls except at horizontal and vertical steel bar reinforcement locations.

3. The Compressor Foundations shall be of sufficient mass to resist the kenetic Reactions arising from the Compressors, and shall meet the requirements of Equipment Manufacturer and Engineer.

4. Equipment Anchor Bolts shall be sleeved and Installed in Accordance with the latest ACI & AISC Spec's., and Subject to Approval of the Engineer.

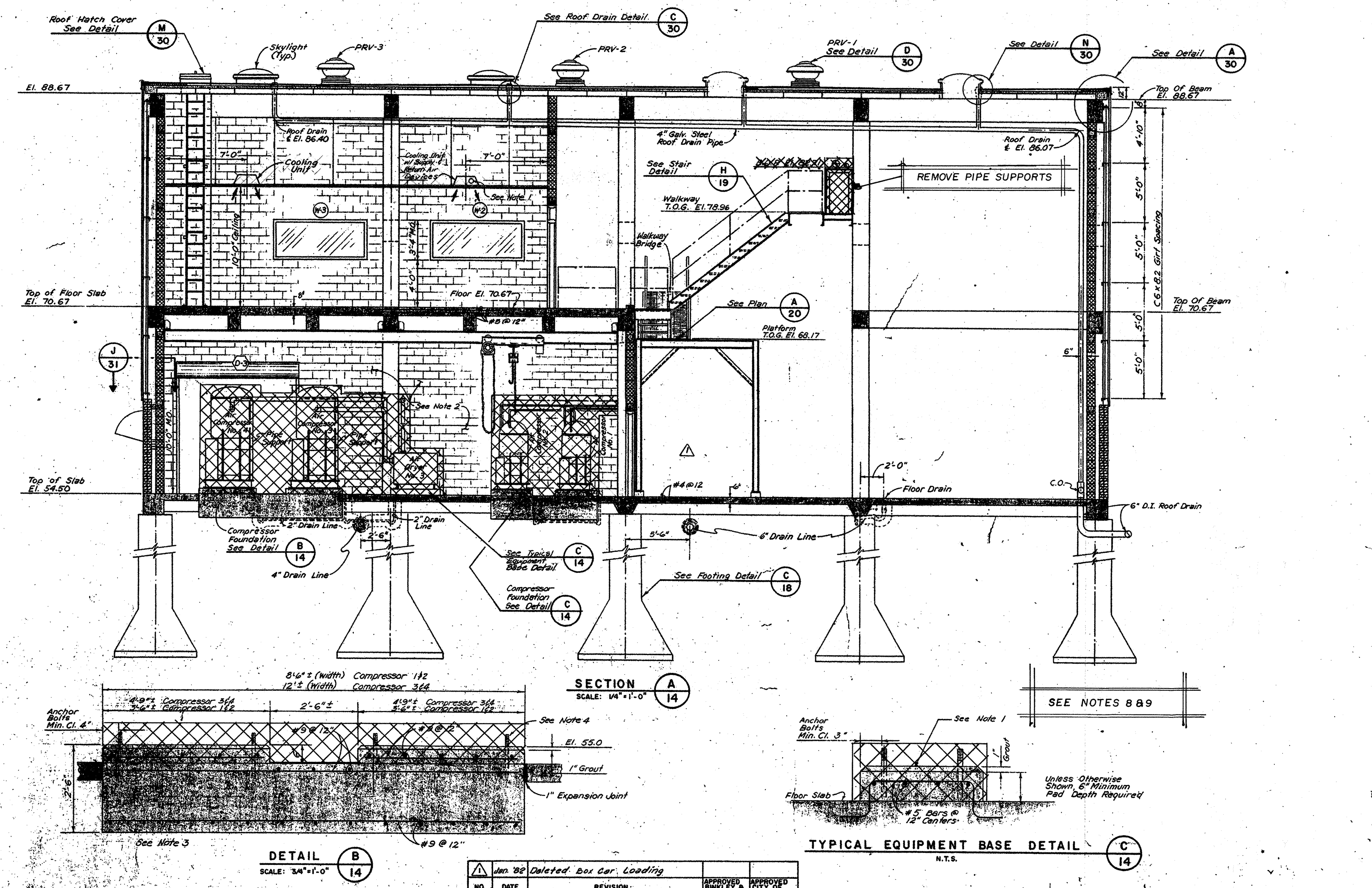

NO.	DATE	REVISION	APPROVED BINKLEY & HOLMES	APPROVED CITY OF HOUSTON
1	Jan. '82	Deleted box car Loading		

JOB NO. 3304-DS-2

CITY OF HOUSTON
DEPARTMENT OF PUBLIC WORKS

ALMEDA SIMS – SLUDGE DISPOSAL PLANT
PNEUMATIC CONVEYING, STORAGE AND LOADING FACILITIES

LOADING FACILITIES SECTION AND DETAILS

RECOMMENDED FOR APPROVAL:
BINKLEY & HOLMES, INC. CONSULTING ENGINEERS

APPROVED:
WASTEWATER — PAVING
WATER — CONSTRUCTION
STORM SEWER
ASST. DIRECTOR — DIRECTOR

DESIGNED BY: J.A.J. & J.L.R. SCALE: AS SHOWN
DRAWN BY: G.A.S. DATE: APRIL 1980
CHECKED BY: K.R.L. DRAWING NO.
SHEET NO. 14 OF 51

NOTES:

1. ALL FACILITIES SHOWN ARE EXISTING UNLESS OTHERWISE NOTED. DATA SHOWN FOR EXISTING FACILITIES IS TAKEN FROM CITY OF HOUSTON RECORD DRAWINGS. CONTRACTOR SHALL FIELD VERIFY ALL DIMENSIONS, ELEVATIONS AND ALL OTHER DATA PRIOR TO START OF WORK AND PROMPTLY BRING DEVIATIONS TO ENGINEER'S ATTENTION.

2. DEMOLITION AND SEQUENCE OF CONSTRUCTION SHALL BE AS PER THE CONTRACT DOCUMENTS.

3. CROSS HATCHING IS USED TO INDICATE SCHEMATICALLY THE ITEMS TO BE REMOVED DURING THIS PHASE. THE CONTRACTOR SHALL LOCATE PIPING CONNECTIONS AND UTILIZE PIPING JOINTS WHERE POSSIBLE TO INTERCEPT THE EXISTING PIPING TO FACILITATE CONNECTION TO NEW PROCESS LINES.

4. REMOVE ALL EXPOSED REBAR AND ANCHOR BOLTS WHICH ARE TO BE REMOVED A MINIMUM OF 1-1/2 INCHES BELOW SURFACE OF REMAINING CONCRETE. FILL ALL VOIDS WITH GROUT CONTAINING A LATEX BONDING AGENT IN ACCORDANCE WITH THE SPECIFICATIONS. GROUTING OPERATIONS SHALL PRODUCE AN EVEN FINISH VERTICALLY PLUMB TO RECEIVE THE NEW FRAMING. THE GROUTING OPERATION SHALL NOT REDUCE THE SIZE OF OPENINGS.

5. CONTRACTOR SHALL PROPERLY AND THOROUGHLY CLEAN ALL CONCRETE, PIPE AND OTHER APPURTENANCES THAT SHALL REMAIN.

6. REMOVE ALL ELECTRICAL AND INSTRUMENT CONDUIT, WIRING AND CABLE, TO THE POINT OF ORIGIN ASSOCIATED WITH ALL EQUIPMENT AND INSTRUMENTATION REMOVED.

7. REMOVE ALL PIPING ASSOCIATED WITH DEMOLISHED EQUIPMENT UNLESS OTHERWISE NOTED.

8. SOME OF THE PIPING AND EQUIPMENT SHOWN TO BE DEMOLISHED HAS BEEN PREVIOUSLY REMOVED OR PARTIALLY DISMANTLED. THE CONTRACTOR SHALL REMOVE ALL REMAINING. EQUIPMENT, PIPING AND CONCRETE PEDESTALS.

9. THE CONTRACTOR SHALL REMOVE ALL SURPLUS CONCRETE PEDESTALS TO A MINIMUM OF 1-1/2" BELOW THE SURFACE OF THE EXISTING FLOOR AND ALL SURFACES SHALL BE REPAIRED USING GROUT CONTAINING A LATEX BONDING AGENT IN ACCORDANCE WITH THE SPECIFICATIONS. UNDERGROUND FACILITIES SHOWN TO BE DEMOLISHED MAY BE FILLED, PLUGGED, AND ABANDONED IN PLACE OR REMOVED FORM THE SITE UNLESS SPECIFICALLY NOTED TO BE REMOVED.

10. ALL UNDERGROUND FACILITIES SHOWN TO BE DEMOLISHED MAY BE FILLED, PLUGGED, AND ABANDONED IN PLACE UNLESS SPECIFICALLY NOTED TO BE REMOVED.

11. PRESERVE AND PROTECT REBAR WHERE IT IS SHOWN TO BE REUSED. DO NOT OVERCUT CORNERS OF OPENINGS. DO NOT CUT THE REBAR AS THE CONCRETE IS BEING REMOVED. USE BONDING AGENT AND PREMOLDED SELF-ADHESIVE WATERSTOP WHERE CONDITIONS REQUIRE THEIR USE.

12. ALL PIPE HANGERS MOUNTING BRACKETS ARE TO BE LEFT IN PLACE, UNLESS NOTED OTHERWISE.

13. WHERE DEMOLTION ACTIVITIES LEAVE ANY OPENINGS IN THE GRATING, WALKWAYS, OR WORK PLATFORMS LARGER THAN 3 INCHES, GRATING SHALL BE INSTALLED TO COVER THE OPENING. THE GRATING MUST MATCH THE EXISTING GRATING AND MUST NOT PRESENT A TRIP HAZARD.

14. THE BELOW GRADE DRAIN PIPES AND SURFACE INLETS SHALL REMAIN IN PLACE AND OPERATIONAL.

ORIGINAL SCALE IN INCHES FOR REDUCED PLANS

PRIVATE UTILITY LINES SHOWN

ENTEX, INC.

SOUTHWESTERN BELL TELEPHONE COMPANY
Valid for one year only.

HOUSTON LIGHTING & POWER CO.
Approval only for crossing underground ductlines unless noted. Valid for one year only.

REV NO	DESCRIPTION	APP'D	DATE

SEAL: AS-BUILT 1/25/02

SEAL

RATNALA & BAHL, INC.
Engineers • Architects • Surveyors
11767 KATY FREEWAY, SUITE 510
HOUSTON, TEXAS 77079

CH2M HILL
7600 West Tidwell Road, Suite 400
Houston Tx 77040
713.462.0161

Binkley & Barfield, Inc.
Consulting Engineers
1710 Seamist Drive Houston, Texas 77008

ALMEDA SIMS BIOSOLIDS DRYER REHABILITATION

CIP NO 0298-05-3
FILE NO: 4289-4

DEMOLITION PLAN
SECTIONS AND DETAILS

CITY OF HOUSTON
DEPARTMENT OF PUBLIC WORKS AND ENGINEERING
ENGINEERING, CONSTRUCTION AND REAL ESTATE GROUP

SECTION APPROVALS

WATER ENGINEERING — TRAFFIC AND SIGNAL ENGINEERING
WASTEWATER ENGINEERING 2-25-99 — STREET & BRIDGE ENGINEERING
STORMWATER ENGINEERING — CONSTRUCTION 3/2/99
2/25/99

OTHER DEPARTMENTS

PLANNING AND DEVELOPMENT — SPONSOR DEPARTMENT

CITY ENGINEER — DATE 3-2-99
DIRECTOR OF PUBLIC WORKS AND ENGINEERING — DATE 3/5/99

SUBMITTED:
SCALE: AS NOTED
DATE:
SURVEY BY: N/A
F B NO:

DESIGNED BY: WLW
DRAWN BY: WLW
DWG. NO.: D-26
SHT NO 102 of 159 SHTS
CITY DWG NO: 35001

CADD DWG FILE NO : F:/64305/NONE
FILE DATE--OPERATOR: NONE

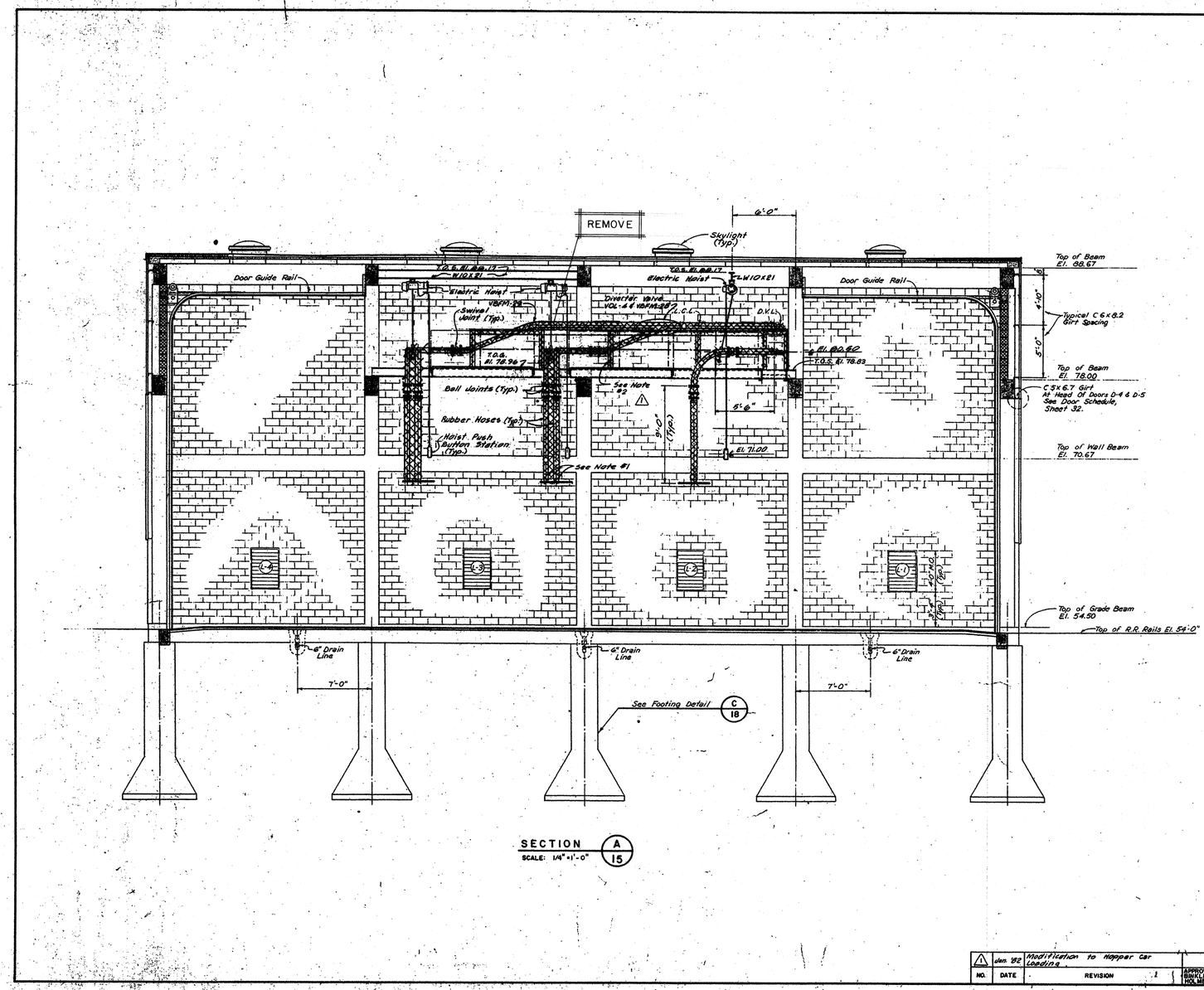

SECTION A / 15
SCALE: 1/4"=1'-0"

NOTES:
1. The Car Loading Hoses and Vent Lines shall be furnished with Break-away or weak type joints.
2. Conveying equipment may require relocating of support member columns.

PRIVATE UTILITY LINES SHOWN

ENTEX, INC.

SOUTHWESTERN BELL TELEPHONE COMPANY
Valid for one year only.

HOUSTON LIGHTING & POWER CO.
Approval only for crossing underground ductlines unless noted. Valid for one year only.

REV NO	DESCRIPTION	APP'D	DATE
1	Jan '82 Modification to Hopper car loading.	APPROVED BIRKLEY & HOLMES	APPROVED CITY OF HOUSTON

SEAL — AS-BUILT 1/25/02

SEAL — STATE OF TEXAS, DARIUS RATNALA, 36[illegible], REGISTERED PROFESSIONAL ENGINEER, 1/29/99

RATNALA & BAHL, INC.
Engineers • Architects • Surveyors
11767 KATY FREEWAY, SUITE 510
HOUSTON, TEXAS 77079

CH2M HILL
7600 West Tidwell Road, Suite 400
Houston Tx 77040
713.462.0161

Binkley & Barfield, Inc.
Consulting Engineers
1710 Seamist Drive Houston, Texas 77008

JOB NO. 3304-DB-2

CITY OF HOUSTON
DEPARTMENT OF PUBLIC WORKS

ALMEDA SIMS
SLUDGE DISPOSAL PLANT
PNEUMATIC CONVEYING, STORAGE AND LOADING FACILITIES

LOADING FACILITIES
SECTION

RECOMMENDED FOR APPROVAL:
Kenneth R. Binkley
BINKLEY & HOLMES, INC. CONSULTING ENGINEERS

STATE OF TEXAS, DARIUS A. BANDA, 47491, REGISTERED PROFESSIONAL ENGINEER
STATE OF TEXAS, KENNETH R. LINSEY, 51156, REGISTERED PROFESSIONAL ENGINEER

APPROVED:
WASTEWATER — Walter Gillman
WATER
STORM SEWER — Asst. Director
PAVING — Jerry Dunbar, CONSTRUCTION
Jimmie Schindewolf, DIRECTOR

DESIGNED BY J.A.J. & J.L.R. SCALE: 1/4"=1'-0"
DRAWN BY G.A.S. DATE: APRIL 1980
CHECKED BY K.R.L. DRAWING NO.
SHEET SHEET NO. 15 OF 81

ALMEDA SIMS BIOSOLIDS DRYER REHABILITATION

CIP NO 0298-05-3
FILE NO: 4289-4

DEMOLITION PLAN
SECTION

CITY OF HOUSTON
DEPARTMENT OF PUBLIC WORKS AND ENGINEERING
ENGINEERING, CONSTRUCTION AND REAL ESTATE GROUP

SECTION APPROVALS

WATER ENGINEERING
TRAFFIC AND SIGNAL ENGINEERING
Kenneth Lawson 2-25-99 — WASTEWATER ENGINEERING
STREET & BRIDGE ENGINEERING
STORMWATER ENGINEERING
Anthony Russo 3/2/99 — CONSTRUCTION

OTHER DEPARTMENTS

PLANNING AND DEVELOPMENT
SPONSOR DEPARTMENT
CITY ENGINEER — DATE 3-2-99
DIRECTOR OF PUBLIC WORKS AND ENGINEERING — DATE 3/5/99

SUBMITTED:
SCALE: AS NOTED
DATE:
SURVEY BY: N/A
F B NO:

DESIGNED BY: WLW
DRAWN BY: WLW
DWG. NO. : D-27
SHT NO 103 of 159 SHTS
CITY DWG NO: 35001

NOTES:

1. ALL FACILITIES SHOWN ARE EXISTING UNLESS OTHERWISE NOTED. DATA SHOWN FOR EXISTING FACILITIES IS TAKEN FROM CITY OF HOUSTON RECORD DRAWINGS. CONTRACTOR SHALL FIELD VERIFY ALL DIMENSIONS, ELEVATIONS AND ALL OTHER DATA PRIOR TO START OF WORK AND PROMPTLY BRING DEVIATIONS TO ENGINEER'S ATTENTION.
2. DEMOLITION AND SEQUENCE OF CONSTRUCTION SHALL BE AS PER THE CONTRACT DOCUMENTS.
3. CROSS HATCHING IS USED TO INDICATE SCHEMATICALLY THE ITEMS TO BE REMOVED DURING THIS PHASE. THE CONTRACTOR SHALL LOCATE PIPING CONNECTIONS AND UTILIZE PIPING JOINTS WHERE POSSIBLE TO INTERCEPT THE EXISTING PIPING TO FACILITATE CONNECTION TO NEW PROCESS LINES.
4. REMOVE ALL EXPOSED REBAR AND ANCHOR BOLTS WHICH ARE TO BE REMOVED A MINIMUM OF 1-1/2 INCHES BELOW SURFACE OF REMAINING CONCRETE. FILL ALL VOIDS WITH GROUT CONTAINING A LATEX BONDING AGENT IN ACCORDANCE WITH THE SPECIFICATIONS. GROUTING OPERATIONS SHALL PRODUCE AN EVEN FINISH VERTICALLY PLUMB TO RECEIVE THE NEW FRAMING. THE GROUTING OPERATION SHALL NOT REDUCE THE SIZE OF OPENINGS.
5. CONTRACTOR SHALL PROPERLY AND THOROUGHLY CLEAN ALL CONCRETE, PIPE AND OTHER APPURTENANCES THAT SHALL REMAIN.
6. REMOVE ALL ELECTRICAL AND INSTRUMENT CONDUIT, WIRING AND CABLE, TO THE POINT OF ORIGIN ASSOCIATED WITH ALL EQUIPMENT AND INSTRUMENTATION REMOVED.
7. REMOVE ALL PIPING ASSOCIATED WITH DEMOLISHED EQUIPMENT UNLESS OTHERWISE NOTED.
8. SOME OF THE PIPING AND EQUIPMENT SHOWN TO BE DEMOLISHED HAS BEEN PREVIOUSLY REMOVED OR PARTIALLY DISMANTLED. THE CONTRACTOR SHALL REMOVE ALL REMAINING. EQUIPMENT , PIPING AND CONCRETE PEDESTALS.
9. THE CONTRACTOR SHALL REMOVE ALL SURPLUS CONCRETE PEDESTALS TO A MINIMUM OF 1-1/2" BELOW THE SURFACE OF THE EXISTING FLOOR AND ALL SURFACES SHALL BE REPAIRED USING GROUT CONTAINING A LATEX BONDING AGENT IN ACCORDANCE WITH THE SPECIFICATIONS. UNDERGROUND FACILITIES SHOWN TO BE DEMOLISHED MAY BE FILLED, PLUGGED, AND ABANDONED IN PLACE OR REMOVED FORM THE SITE UNLESS SPECIFICALLY NOTED TO BE REMOVED.
10. ALL UNDERGROUND FACILITIES SHOWN TO BE DEMOLISHED MAY BE FILLED, PLUGGED, AND ABANDONED IN PLACE UNLESS SPECIFICALLY NOTED TO BE REMOVED.
11. PRESERVE AND PROTECT REBAR WHERE IT IS SHOWN TO BE REUSED. DO NOT OVERCUT CORNERS OF OPENINGS. DO NOT CUT THE REBAR AS THE CONCRETE IS BEING REMOVED. USE BONDING AGENT AND PREMOLDED SELF-ADHESIVE WATERSTOP WHERE CONDITIONS REQUIRE THEIR USE.
12. ALL PIPE HANGERS MOUNTING BRACKETS ARE TO BE LEFT IN PLACE, UNLESS NOTED OTHERWISE.
13. WHERE DEMOLTION ACTIVITIES LEAVE ANY OPENINGS IN THE GRATING, WALKWAYS, OR WORK PLATFORMS LARGER THAN 3 INCHES, GRATING SHALL BE INSTALLED TO COVER THE OPENING. THE GRATING MUST MATCH THE EXISTING GRATING AND MUST NOT PRESENT A TRIP HAZARD.
14. THE BELOW GRADE DRAIN PIPES AND SURFACE INLETS SHALL REMAIN IN PLACE AND OPERATIONAL.

ORIGINAL SCALE IN INCHES FOR REDUCED PLANS
0 1 2 3
SCALE: 3 IN. = 1 FT.
SCALE: 1½ IN. = 1 FT.

CADD DWG FILE NO :F:/64305/NONE
FILE DATE--OPERATOR: NONE

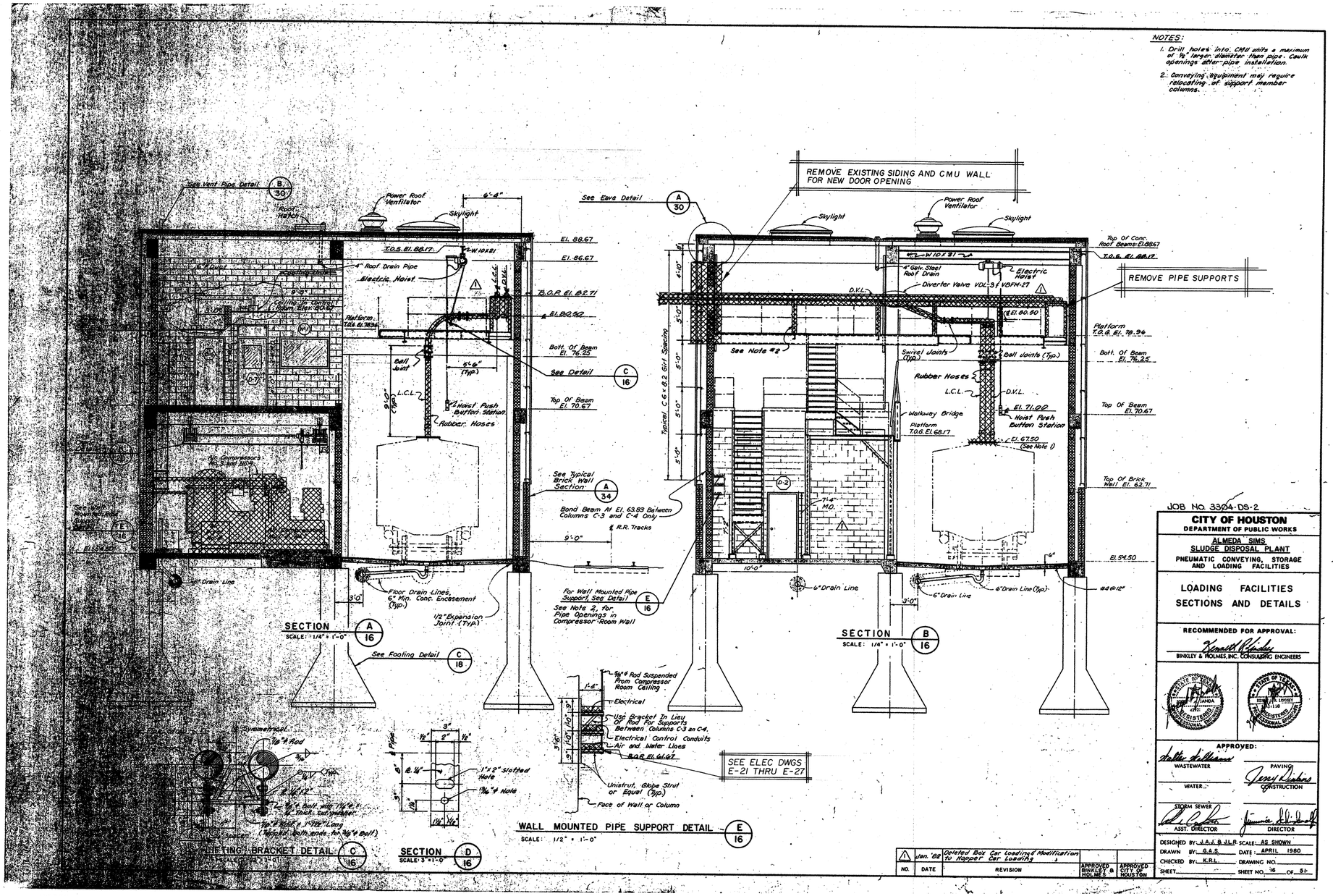

NO.	DATE	REVISION	APPROVED BINKLEY & HOLMES	APPROVED CITY OF HOUSTON
1	Jan. '82	Deleted Box Car Loading & Modification to Hopper Car Loading		

JOB NO. 3304-DS-2

CITY OF HOUSTON
DEPARTMENT OF PUBLIC WORKS

ALMEDA SIMS
SLUDGE DISPOSAL PLANT
PNEUMATIC CONVEYING, STORAGE AND LOADING FACILITIES

LOADING FACILITIES
SECTIONS AND DETAILS

RECOMMENDED FOR APPROVAL:
Kenneth Binkley
BINKLEY & HOLMES, INC. CONSULTING ENGINEERS

APPROVED:
WASTEWATER
WATER
STORM SEWER ASST. DIRECTOR
PAVING
CONSTRUCTION
DIRECTOR

DESIGNED BY J.A.J. & J.L.R. SCALE: AS SHOWN
DRAWN BY G.A.S. DATE APRIL 1980
CHECKED BY K.R.L. DRAWING NO.
SHEET SHEET NO. 16 OF 51

ORIGINAL SCALE IN INCHES FOR REDUCED PLANS
SCALE 3 IN. = 1 FT.
SCALE 1½ IN. = 1 FT.

NOTES:

1. ALL FACILITIES SHOWN ARE EXISTING UNLESS OTHERWISE NOTED. DATA SHOWN FOR EXISTING FACILITIES IS TAKEN FROM CITY OF HOUSTON RECORD DRAWINGS. CONTRACTOR SHALL FIELD VERIFY ALL DIMENSIONS, ELEVATIONS AND ALL OTHER DATA PRIOR TO START OF WORK AND PROMPTLY BRING DEVIATIONS TO ENGINEER'S ATTENTION.
2. DEMOLITION AND SEQUENCE OF CONSTRUCTION SHALL BE AS PER THE CONTRACT DOCUMENTS.
3. CROSS HATCHING IS USED TO INDICATE SCHEMATICALLY THE ITEMS TO BE REMOVED DURING THIS PHASE. THE CONTRACTOR SHALL LOCATE PIPING CONNECTIONS AND UTILIZE PIPING JOINTS WHERE POSSIBLE TO INTERCEPT THE EXISTING PIPING TO FACILITATE CONNECTION TO NEW PROCESS LINES.
4. REMOVE ALL EXPOSED REBAR AND ANCHOR BOLTS WHICH ARE TO BE REMOVED A MINIMUM OF 1-1/2 INCHES BELOW SURFACE OF REMAINING CONCRETE. FILL ALL VOIDS WITH GROUT CONTAINING A LATEX BONDING AGENT IN ACCORDANCE WITH THE SPECIFICATIONS. GROUTING OPERATIONS SHALL PRODUCE AN EVEN FINISH VERTICALLY PLUMB TO RECEIVE THE NEW FRAMING. THE GROUTING OPERATION SHALL NOT REDUCE THE SIZE OF OPENINGS.
5. CONTRACTOR SHALL PROPERLY AND THOROUGHLY CLEAN ALL CONCRETE, PIPE AND OTHER APPURTENANCES THAT SHALL REMAIN.
6. REMOVE ALL ELECTRICAL AND INSTRUMENT CONDUIT, WIRING AND CABLE, TO THE POINT OF ORIGIN ASSOCIATED WITH ALL EQUIPMENT AND INSTRUMENTATION REMOVED.
7. REMOVE ALL PIPING ASSOCIATED WITH DEMOLISHED EQUIPMENT UNLESS OTHERWISE NOTED.
8. SOME OF THE PIPING AND EQUIPMENT SHOWN TO BE DEMOLISHED HAS BEEN PREVIOUSLY REMOVED OR PARTIALLY DISMANTLED. THE CONTRACTOR SHALL REMOVE ALL REMAINING EQUIPMENT, PIPING AND CONCRETE PEDESTALS.
9. THE CONTRACTOR SHALL REMOVE ALL SURPLUS CONCRETE PEDESTALS TO A MINIMUM OF 1-1/2" BELOW THE SURFACE OF THE EXISTING FLOOR AND ALL SURFACES SHALL BE REPAIRED USING GROUT CONTAINING A LATEX BONDING AGENT IN ACCORDANCE WITH THE SPECIFICATIONS. UNDERGROUND FACILITIES SHOWN TO BE DEMOLISHED MAY BE FILLED, PLUGGED, AND ABANDONED IN PLACE OR REMOVED FORM THE SITE UNLESS SPECIFICALLY NOTED TO BE REMOVED.
10. ALL UNDERGROUND FACILITIES SHOWN TO BE DEMOLISHED MAY BE FILLED, PLUGGED, AND ABANDONED IN PLACE UNLESS SPECIFICALLY NOTED TO BE REMOVED.
11. PRESERVE AND PROTECT REBAR WHERE IT IS SHOWN TO BE REUSED. DO NOT OVERCUT CORNERS OF OPENINGS. DO NOT CUT THE REBAR AS THE CONCRETE IS BEING REMOVED. USE BONDING AGENT AND PREMOLDED SELF-ADHESIVE WATERSTOP WHERE CONDITIONS REQUIRE THEIR USE.
12. ALL PIPE HANGERS MOUNTING BRACKETS ARE TO BE LEFT IN PLACE, UNLESS NOTED OTHERWISE.
13. WHERE DEMOLTION ACTIVITIES LEAVE ANY OPENINGS IN THE GRATING, WALKWAYS, OR WORK PLATFORMS LARGER THAN 3 INCHES, GRATING SHALL BE INSTALLED TO COVER THE OPENING. THE GRATING MUST MATCH THE EXISTING GRATING AND MUST NOT PRESENT A TRIP HAZARD.
14. THE BELOW GRADE DRAIN PIPES AND SURFACE INLETS SHALL REMAIN IN PLACE AND OPERATIONAL.
15. PREVIOUS PROJECT RECORDS INDICATE THAT ASBESTOS MATERIAL WAS USED IN THE FABRICATION OF THE SIDING AND IT MAY BE PRESENT IN OTHER PLACES IN THE BUILDING AND THE SILOS. THE CONTRACTOR MUST TAKE ADEQUATE PRECAUTION AND APPROPRIATE MEASURES TO SAFEGUARD PEOPLE AND ADHERE TO ALL APPLICABLE REGULATIONS.

PRIVATE UTILITY LINES SHOWN

ENTEX, INC.

SOUTHWESTERN BELL TELEPHONE COMPANY
Valid for one year only.

HOUSTON LIGHTING & POWER CO.
Approval only for crossing underground ductlines unless noted. Valid for one year only.

REV NO	DESCRIPTION	APP'D	DATE

SEAL
AS-BUILT
1/25/02

SEAL
STATE OF TEXAS
BAHL RATNALA
36
PROFESSIONAL ENGINEER
12/99

RATNALA & BAHL, INC.
Engineers • Architects • Surveyors
11767 KATY FREEWAY. SUITE 510
HOUSTON, TEXAS 77079

CH2M HILL
7600 West Tidwell Road, Suite 400
Houston Tx 77040
713.462.0161

Binkley & Barfield, Inc.
Consulting Engineers
1710 Seamist Drive Houston, Texas 77008

ALMEDA SIMS
BIOSOLIDS
DRYER REHABILITATION

CIP NO 0298-05-3
FILE NO: 4289-4

DEMOLITION PLAN
SECTIONS AND DETAILS

CITY OF HOUSTON
DEPARTMENT OF PUBLIC WORKS AND ENGINEERING
ENGINEERING, CONSTRUCTION AND REAL ESTATE GROUP

SECTION APPROVALS

WATER ENGINEERING
TRAFFIC AND SIGNAL ENGINEERING
WASTEWATER ENGINEERING
STREET & BRIDGE ENGINEERING
STORMWATER ENGINEERING
CONSTRUCTION
12/27/99

OTHER DEPARTMENTS

PLANNING AND DEVELOPMENT
SPONSOR DEPARTMENT
CITY ENGINEER — DATE 3-2-99
DIRECTOR OF PUBLIC WORKS AND ENGINEERING — DATE 3/5/99

SUBMITTED:
SCALE: AS NOTED
DATE:
SURVEY BY: N/A
F B NO:

DESIGNED BY: WLW
DRAWN BY: WLW
DWG. NO. : D-28
SHT NO 104 of 159 SHTS
CITY DWG NO: 35001

CADD DWG FILE NO :F:/64305/NONE
FILE DATE-OPERATOR: NONE

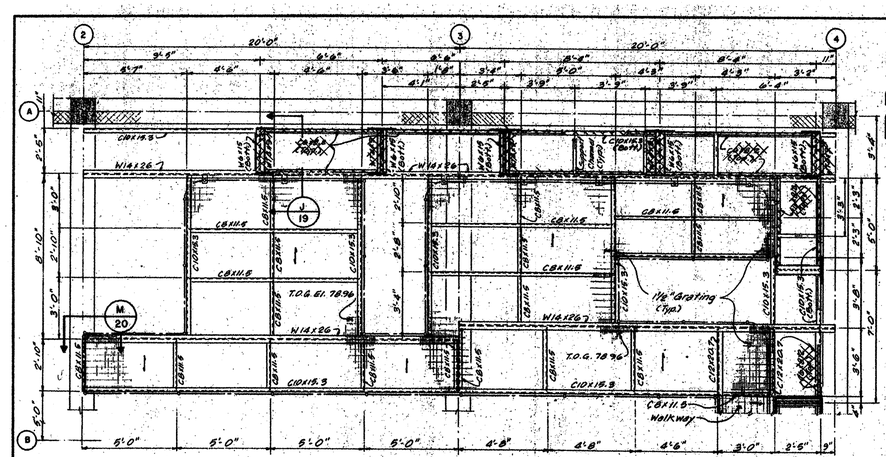

SERVICE PLATFORM DETAIL A 19
SCALE: 3/8" = 1'-0"

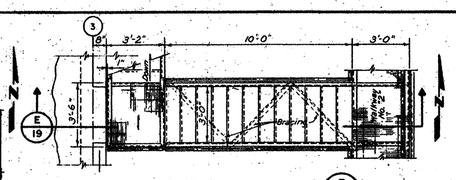

STAIR DETAIL B 19
SCALE: 3/8" = 1'-0"

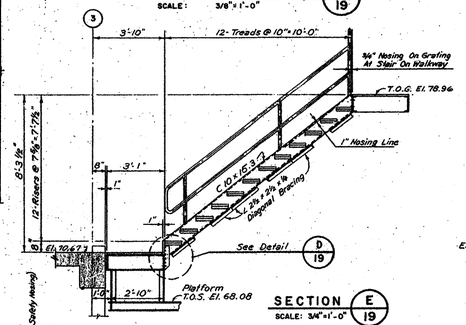

SECTION E 19
SCALE: 3/4"=1'-0"

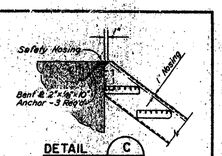

DETAIL C 19
SCALE: 3/4"=1'-0"

DETAIL D 19
SCALE: 3/4" = 1'-0"

NOTE:
Galvanize all structure steel after fabrication, unless noted otherwise.

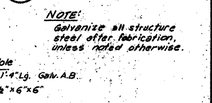

DETAIL F 19
SCALE: 3/4" = 1'-0"
(2 - REQUIRED)

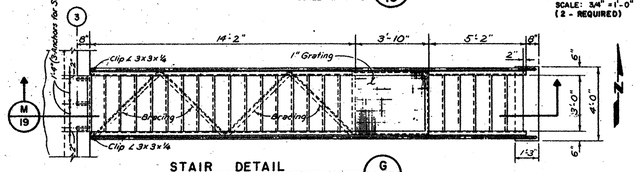

STAIR DETAIL G 19
SCALE: 3/8" = 1'-0"

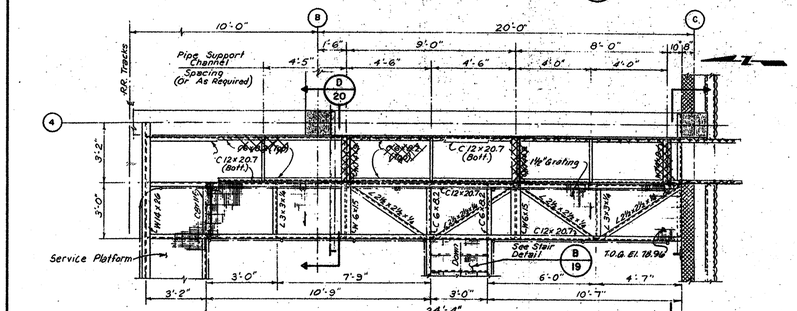

WALKWAY DETAIL H 19
SCALE: 3/8"=1'-0"

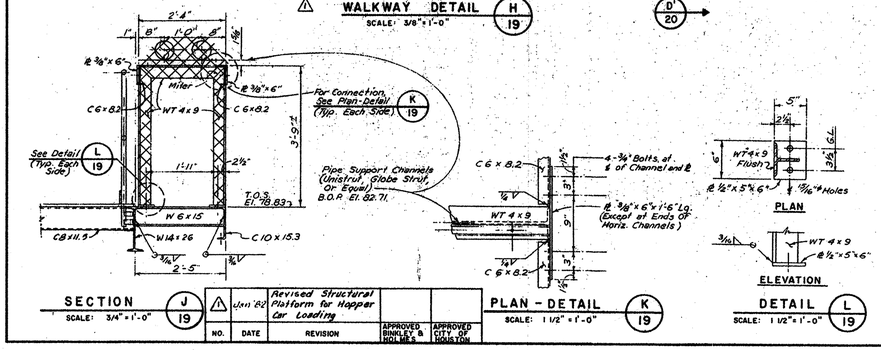

SECTION J 19
SCALE: 3/4"=1'-0"

DETAIL L 19
SCALE: 1 1/2"=1'-0"

PLAN - DETAIL K 19
SCALE: 1 1/2"=1'-0"

NO.	DATE	REVISION	APPROVED BINKLEY & HOLMES	APPROVED CITY OF HOUSTON
1	Jun '82	Revised Structural Platform for Hopper Car Loading		

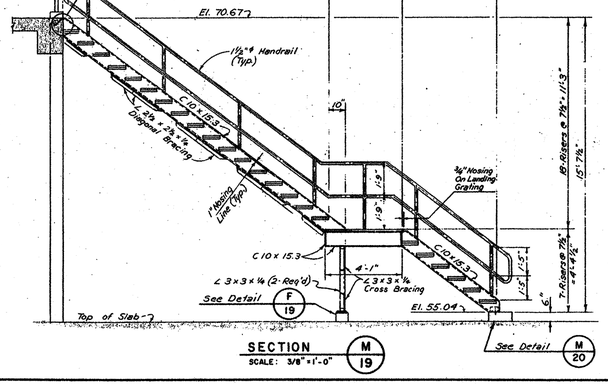

SECTION M 19
SCALE: 3/8"=1'-0"

JOB NO. 3304-DS-2

CITY OF HOUSTON
DEPARTMENT OF PUBLIC WORKS

ALMEDA SIMS
SLUDGE DISPOSAL PLANT
PNEUMATIC CONVEYING, STORAGE AND LOADING FACILITIES

LOADING FACILITIES
WALKWAY AND STAIR DETAILS

RECOMMENDED FOR APPROVAL:
BINKLEY & HOLMES, INC. CONSULTING ENGINEERS

APPROVED:
WASTEWATER
WATER
STORM SEWER
ASST. DIRECTOR
PAVING
CONSTRUCTION
DIRECTOR

DESIGNED BY: J.L.R. SCALE: AS SHOWN
DRAWN BY: G.A.S. DATE: APRIL 1980
CHECKED BY: K.R.L. DRAWING NO.
SHEET SHEET NO. 19 OF 51

PRIVATE UTILITY LINES SHOWN

ENTEX, INC.

SOUTHWESTERN BELL TELEPHONE COMPANY
Valid for one year only.

HOUSTON LIGHTING & POWER CO.
Approval only for crossing underground ductlines unless noted. Valid for one year only.

REV NO	DESCRIPTION	APP'D	DATE

SEAL
AS-BUILT
1/25/02

SEAL
STATE OF TEXAS
RATNALA
1/25/99

RATNALA & BAHL, INC.
Engineers • Architects • Surveyors
11767 KATY FREEWAY, SUITE 510
HOUSTON, TEXAS 77079

CH2M HILL
7600 West Tidwell Road, Suite 400
Houston Tx 77040
713.462.0161

Binkley & Barfield, Inc.
Consulting Engineers
1710 Seamist Drive Houston, Texas 77008

ALMEDA SIMS
BIOSOLIDS
DRYER REHABILITATION

CIP NO 0298-05-3
FILE NO: 4289-4

DEMOLITION PLAN
WALKWAY AND STAIR DETAILS

CITY OF HOUSTON
DEPARTMENT OF PUBLIC WORKS AND ENGINEERING
ENGINEERING, CONSTRUCTION AND REAL ESTATE GROUP

SECTION APPROVALS

WATER ENGINEERING
TRAFFIC AND SIGNAL ENGINEERING
WASTEWATER ENGINEERING
STREET & BRIDGE ENGINEERING
STORMWATER ENGINEERING
CONSTRUCTION

OTHER DEPARTMENTS

PLANNING AND DEVELOPMENT
SPONSOR DEPARTMENT

CITY ENGINEER — DATE 3-2-99
DIRECTOR OF PUBLIC WORKS AND ENGINEERING — DATE 3/5/99

SUBMITTED:
SCALE: AS NOTED
DATE:
SURVEY BY: N/A
F B NO:

DESIGNED BY: WLW
DRAWN BY: WLW
DWG. NO. : D-29
SHT NO 105 of 159 SHTS
CITY DWG NO: 35001

NOTES:

1. ALL FACILITIES SHOWN ARE EXISTING UNLESS OTHERWISE NOTED. DATA SHOWN FOR EXISTING FACILITIES IS TAKEN FROM CITY OF HOUSTON RECORD DRAWINGS. CONTRACTOR SHALL FIELD VERIFY ALL DIMENSIONS, ELEVATIONS AND ALL OTHER DATA PRIOR TO START OF WORK AND PROMPTLY BRING DEVIATIONS TO ENGINEER'S ATTENTION.
2. DEMOLITION AND SEQUENCE OF CONSTRUCTION SHALL BE AS PER THE CONTRACT DOCUMENTS.
3. CROSS HATCHING IS USED TO INDICATE SCHEMATICALLY THE ITEMS TO BE REMOVED DURING THIS PHASE. THE CONTRACTOR SHALL LOCATE PIPING CONNECTIONS AND UTILIZE PIPING JOINTS WHERE POSSIBLE TO INTERCEPT THE EXISTING PIPING TO FACILITATE CONNECTION TO NEW PROCESS LINES.
4. REMOVE ALL EXPOSED REBAR AND ANCHOR BOLTS WHICH ARE TO BE REMOVED A MINIMUM OF 1-1/2 INCHES BELOW SURFACE OF REMAINING CONCRETE. FILL ALL VOIDS WITH GROUT CONTAINING A LATEX BONDING AGENT IN ACCORDANCE WITH THE SPECIFICATIONS. GROUTING OPERATIONS SHALL PRODUCE AN EVEN FINISH VERTICALLY PLUMB TO RECEIVE THE NEW FRAMING. THE GROUTING OPERATION SHALL NOT REDUCE THE SIZE OF OPENINGS.
5. CONTRACTOR SHALL PROPERLY AND THOROUGHLY CLEAN ALL CONCRETE, PIPE AND OTHER APPURTENANCES THAT SHALL REMAIN.
6. REMOVE ALL ELECTRICAL AND INSTRUMENT CONDUIT, WIRING AND CABLE, TO THE POINT OF ORIGIN ASSOCIATED WITH ALL EQUIPMENT AND INSTRUMENTATION REMOVED.
7. REMOVE ALL PIPING ASSOCIATED WITH DEMOLISHED EQUIPMENT UNLESS OTHERWISE NOTED.
8. SOME OF THE PIPING AND EQUIPMENT SHOWN TO BE DEMOLISHED HAS BEEN PREVIOUSLY REMOVED OR PARTIALLY DISMANTLED. THE CONTRACTOR SHALL REMOVE ALL REMAINING. EQUIPMENT , PIPING AND CONCRETE PEDESTALS.
9. THE CONTRACTOR SHALL REMOVE ALL SURPLUS CONCRETE PEDESTALS TO A MINIMUM OF 1-1/2" BELOW THE SURFACE OF THE EXISTING FLOOR AND ALL SURFACES SHALL BE REPAIRED USING GROUT CONTAINING A LATEX BONDING AGENT IN ACCORDANCE WITH THE SPECIFICATIONS. UNDERGROUND FACILITIES SHOWN TO BE DEMOLISHED MAY BE FILLED, PLUGGED, AND ABANDONED IN PLACE OR REMOVED FORM THE SITE UNLESS SPECIFICALLY NOTED TO BE REMOVED.
10. ALL UNDERGROUND FACILITIES SHOWN TO BE DEMOLISHED MAY BE FILLED, PLUGGED, AND ABANDONED IN PLACE UNLESS SPECIFICALLY NOTED TO BE REMOVED.
11. PRESERVE AND PROTECT REBAR WHERE IT IS SHOWN TO BE REUSED. DO NOT OVERCUT CORNERS OF OPENINGS. DO NOT CUT THE REBAR AS THE CONCRETE IS BEING REMOVED. USE BONDING AGENT AND PREMOLDED SELF-ADHESIVE WATERSTOP WHERE CONDITIONS REQUIRE THEIR USE.
12. ALL PIPE HANGERS MOUNTING BRACKETS ARE TO BE LEFT IN PLACE, UNLESS NOTED OTHERWISE.
13. WHERE DEMOLTION ACTIVITIES LEAVE ANY OPENINGS IN THE GRATING, WALKWAYS, OR WORK PLATFORMS LARGER THAN 3 INCHES, GRATING SHALL BE INSTALLED TO COVER THE OPENING. THE GRATING MUST MATCH THE EXISTING GRATING AND MUST NOT PRESENT A TRIP HAZARD.
14. THE BELOW GRADE DRAIN PIPES AND SURFACE INLETS SHALL REMAIN IN PLACE AND OPERATIONAL.

ORIGINAL SCALE IN INCHES FOR REDUCED PLANS
0 1/4 1/2 1 1½ 2 3
SCALE ½ IN. = 1 FT.
SCALE 3 IN. = 1 FT.

CADD DWG FILE NO : F:/64305/NONE
FILE DATE--OPERATOR: NONE

PRIVATE UTILITY LINES SHOWN

ENTEX, INC.

SOUTHWESTERN BELL TELEPHONE COMPANY
Valid for one year only.

HOUSTON LIGHTING & POWER CO.
Approval only for crossing underground ductlines unless noted. Valid for one year only.

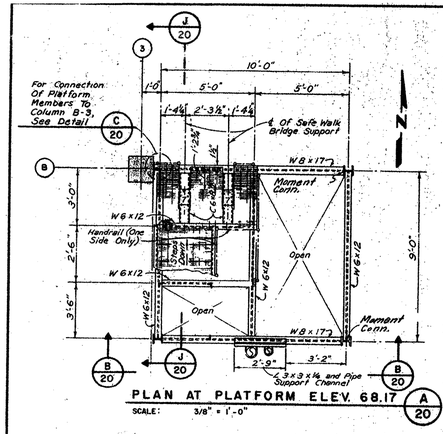

PLAN AT PLATFORM ELEV. 68.17 (A 20)
SCALE: 3/8" = 1'-0"

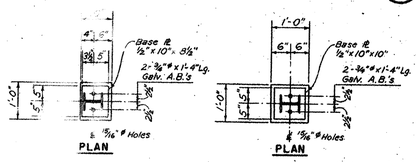

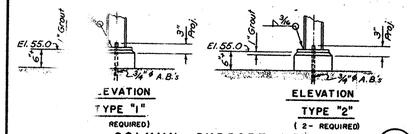

COLUMN SUPPORT DETAILS (E 20)
SCALE: 3/4" = 1'-0"

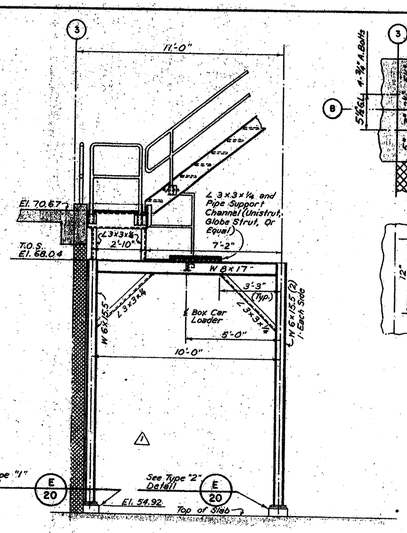

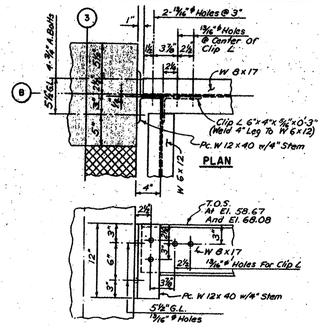

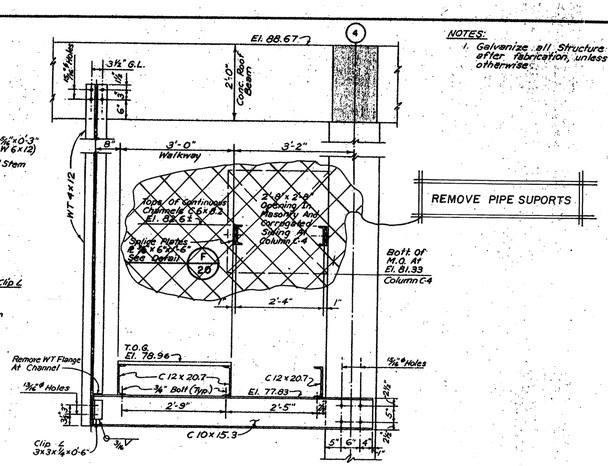

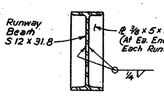

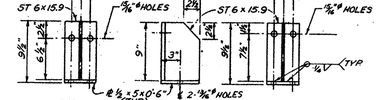

DETAIL - CRANE RUNWAY-BEAM SUPPORTS (G 20)
SCALE: 1 1/2" = 1'-0"

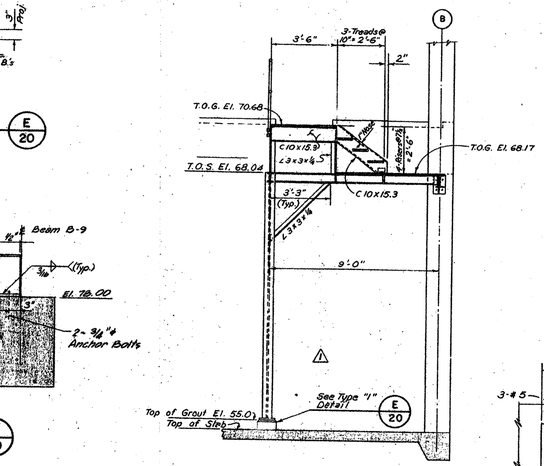

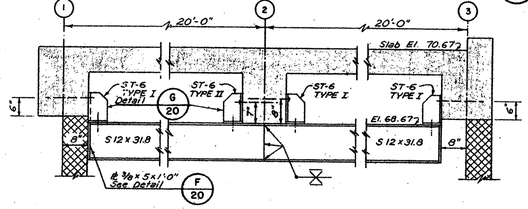

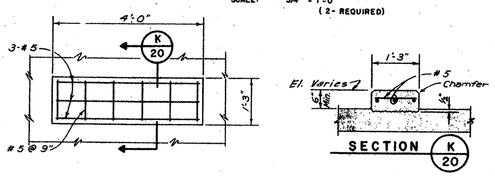

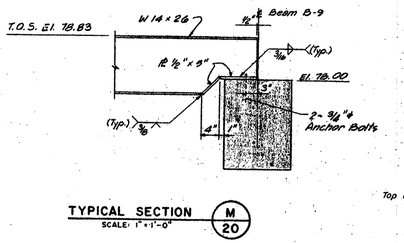

NO.	DATE	REVISION	APPROVED BINKLEY & BARFIELD	APPROVED CITY OF HOUSTON
1	Jan. '82	Deleted Box Car Loading		

REV NO	DESCRIPTION	APP'D	DATE

SEAL
AS-BUILT
David Ratnala
1/25/02

SEAL

RATNALA & BAHL, INC.
Engineers • Architects • Surveyors
11767 KATY FREEWAY, SUITE 510
HOUSTON, TEXAS 77079

CH2M HILL
7600 West Tidwell Road, Suite 400
Houston Tx 77040
713.462.0161

Binkley & Barfield, Inc.
Consulting Engineers
1710 Seamist Drive Houston, Texas 77008

JOB NO 3304-06-2

CITY OF HOUSTON
DEPARTMENT OF PUBLIC WORKS

ALMEDA SIMS
SLUDGE DISPOSAL PLANT
PNEUMATIC CONVEYING, STORAGE AND LOADING FACILITIES

LOADING FACILITIES
PLATFORMS AND
MISCELLANEOUS DETAILS

RECOMMENDED FOR APPROVAL:
Kenneth R. Binkley
BINKLEY & HOLMES, INC. CONSULTING ENGINEERS

APPROVED:
WASTEWATER
PAVING
WATER
CONSTRUCTION
STORM SEWER
ASST. DIRECTOR
DIRECTOR

DESIGNED BY: J.L.R.
DRAWN BY: G.A.S.
CHECKED BY: K.R.L.
SCALE: AS SHOWN
DATE: APRIL 1980
DRAWING NO.
SHEET
SHEET NO. 20 OF 51

ALMEDA SIMS
BIOSOLIDS
DRYER REHABILITATION

CIP NO 0298-05-3
FILE NO: 4289-4

DEMOLITION PLAN
PLATFORMS AND MISCELLANEOUS DETAILS

CITY OF HOUSTON
DEPARTMENT OF PUBLIC WORKS AND ENGINEERING
ENGINEERING, CONSTRUCTION AND REAL ESTATE GROUP

SECTION APPROVALS

WATER ENGINEERING
TRAFFIC AND SIGNAL ENGINEERING
WASTEWATER ENGINEERING
STREET & BRIDGE ENGINEERING
STORMWATER ENGINEERING
CONSTRUCTION

OTHER DEPARTMENTS

PLANNING AND DEVELOPMENT
SPONSOR DEPARTMENT
CITY ENGINEER — DATE 3-2-99
DIRECTOR OF PUBLIC WORKS AND ENGINEERING — DATE 3/3/99

SUBMITTED:
SCALE: AS NOTED
DATE:
SURVEY BY: N/A
F B NO:

DESIGNED BY: WLW
DRAWN BY: WLW
DWG. NO. : D-30
SHT NO 106 of 159 SHTS
CITY DWG NO: 35001

NOTES:

1. ALL FACILITIES SHOWN ARE EXISTING UNLESS OTHERWISE NOTED. DATA SHOWN FOR EXISTING FACILITIES IS TAKEN FROM CITY OF HOUSTON RECORD DRAWINGS. CONTRACTOR SHALL FIELD VERIFY ALL DIMENSIONS, ELEVATIONS AND ALL OTHER DATA PRIOR TO START OF WORK AND PROMPTLY BRING DEVIATIONS TO ENGINEER'S ATTENTION.
2. DEMOLITION AND SEQUENCE OF CONSTRUCTION SHALL BE AS PER THE CONTRACT DOCUMENTS.
3. CROSS HATCHING IS USED TO INDICATE SCHEMATICALLY THE ITEMS TO BE REMOVED DURING THIS PHASE. THE CONTRACTOR SHALL LOCATE PIPING CONNECTIONS AND UTILIZE PIPING JOINTS WHERE POSSIBLE TO INTERCEPT THE EXISTING PIPING TO FACILITATE CONNECTION TO NEW PROCESS LINES.
4. REMOVE ALL EXPOSED REBAR AND ANCHOR BOLTS WHICH ARE TO BE REMOVED A MINIMUM OF 1-1/2 INCHES BELOW SURFACE OF REMAINING CONCRETE. FILL ALL VOIDS WITH GROUT CONTAINING A LATEX BONDING AGENT IN ACCORDANCE WITH THE SPECIFICATIONS. GROUTING OPERATIONS SHALL PRODUCE AN EVEN FINISH VERTICALLY PLUMB TO RECEIVE THE NEW FRAMING. THE GROUTING OPERATION SHALL NOT REDUCE THE SIZE OF OPENINGS.
5. CONTRACTOR SHALL PROPERLY AND THOROUGHLY CLEAN ALL CONCRETE, PIPE AND OTHER APPURTENANCES THAT SHALL REMAIN.
6. REMOVE ALL ELECTRICAL AND INSTRUMENT CONDUIT, WIRING AND CABLE TO THE POINT OF ORIGIN ASSOCIATED WITH ALL EQUIPMENT AND INSTRUMENTATION REMOVED.
7. REMOVE ALL PIPING ASSOCIATED WITH DEMOLISHED EQUIPMENT UNLESS OTHERWISE NOTED.
8. SOME OF THE PIPING AND EQUIPMENT SHOWN TO BE DEMOLISHED HAS BEEN PREVIOUSLY REMOVED OR PARTIALLY DISMANTLED. THE CONTRACTOR SHALL REMOVE ALL REMAINING EQUIPMENT, PIPING AND CONCRETE PEDESTALS.
9. THE CONTRACTOR SHALL REMOVE ALL SURPLUS CONCRETE PEDESTALS TO A MINIMUM OF 1-1/2" BELOW THE SURFACE OF THE EXISTING FLOOR AND ALL SURFACES SHALL BE REPAIRED USING GROUT CONTAINING A LATEX BONDING AGENT IN ACCORDANCE WITH THE SPECIFICATIONS. UNDERGROUND FACILITIES SHOWN TO BE DEMOLISHED MAY BE FILLED, PLUGGED, AND ABANDONED IN PLACE OR REMOVED FORM THE SITE UNLESS SPECIFICALLY NOTED TO BE REMOVED.
10. ALL UNDERGROUND FACILITIES SHOWN TO BE DEMOLISHED MAY BE FILLED, PLUGGED, AND ABANDONED IN PLACE UNLESS SPECIFICALLY NOTED TO BE REMOVED.
11. PRESERVE AND PROTECT REBAR WHERE IT IS SHOWN TO BE REUSED. DO NOT OVERCUT CORNERS OF OPENINGS. DO NOT CUT THE REBAR AS THE CONCRETE IS BEING REMOVED. USE BONDING AGENT AND PREMOLDED SELF-ADHESIVE WATERSTOP WHERE CONDITIONS REQUIRE THEIR USE.
12. ALL PIPE HANGERS MOUNTING BRACKETS ARE TO BE LEFT IN PLACE.
13. WHERE DEMOLTION ACTIVITIES LEAVE ANY OPENINGS IN THE GRATING, WALKWAYS, OR WORK PLATFORMS LARGER THAN 3 INCHES, GRATING SHALL BE INSTALLED TO COVER THE OPENING. THE GRATING MUST MATCH THE EXISTING GRATING AND MUST NOT PRESENT A TRIP HAZARD.
14. THE BELOW GRADE DRAIN PIPES AND SURFACE INLETS SHALL REMAIN IN PLACE AND OPERATIONAL.

SCALE 3 IN. = 1 FT.
SCALE 1½ IN. = 1 FT.
ORIGINAL SCALE IN INCHES FOR REDUCED PLANS

CAUD DWG FILE NO :F:/64305/NONE
FILE DATE--OPERATOR: NONE

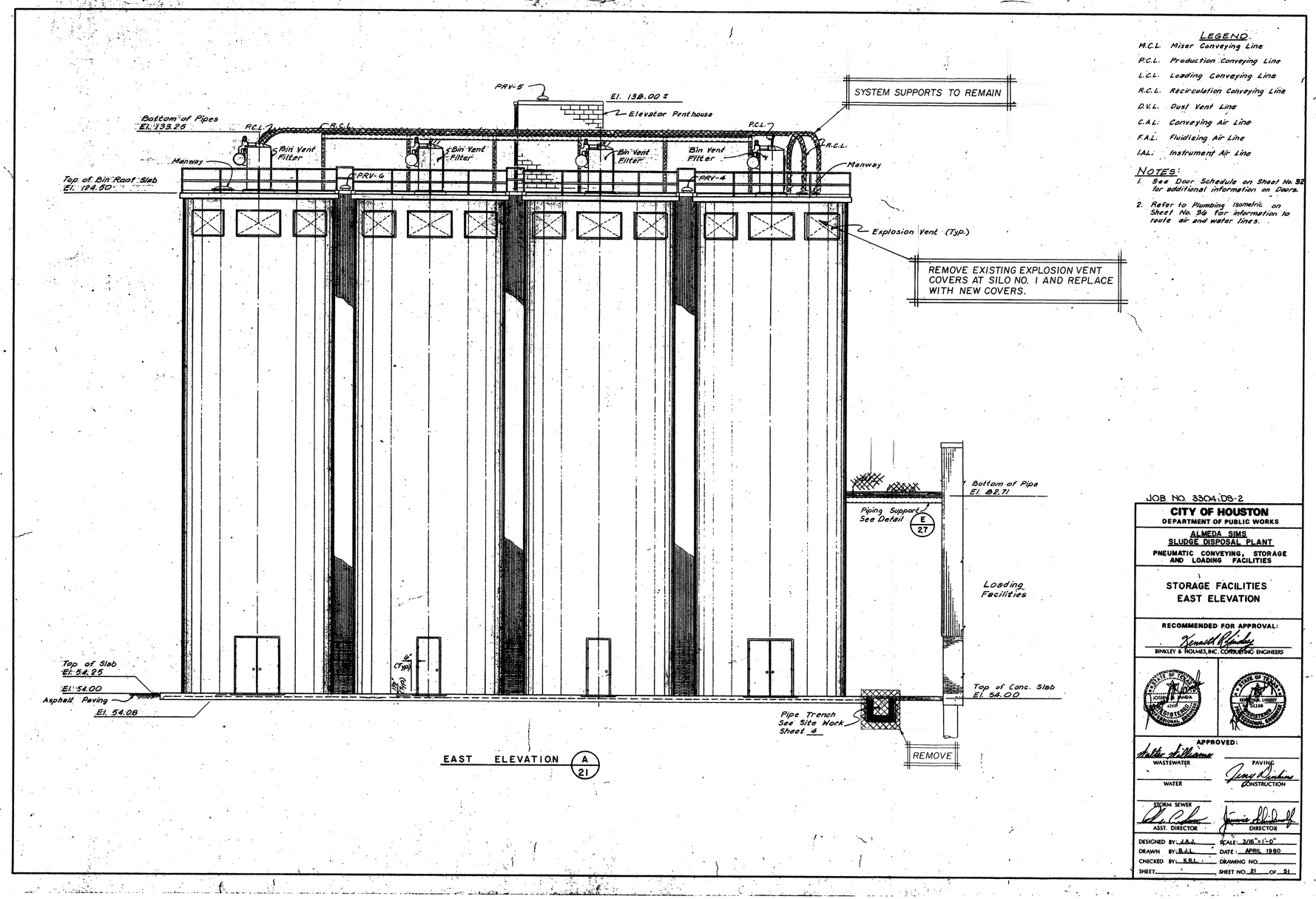

LEGEND.

M.C.L. Mixer Conveying Line
P.C.L. Production Conveying Line
L.C.L. Loading Conveying Line
R.C.L. Recirculation Conveying Line
D.V.L. Dust Vent Line
C.A.L. Conveying Air Line
F.A.L. Fluidizing Air Line
I.A.L. Instrument Air Line

NOTES:

1. See Door Schedule on Sheet No. 32 for additional information on Doors.
2. Refer to Plumbing Isometric on Sheet No. 36 for information to route air and water lines.

SCALE: 3 IN. = 1 FT.
SCALE: ½ IN. = 1 FT.

NOTES:

1. ALL FACILITIES SHOWN ARE EXISTING UNLESS OTHERWISE NOTED. DATA SHOWN FOR EXISTING FACILITIES IS TAKEN FROM CITY OF HOUSTON RECORD DRAWINGS. CONTRACTOR SHALL FIELD VERIFY ALL DIMENSIONS, ELEVATIONS AND ALL OTHER DATA PRIOR TO START OF WORK AND PROMPTLY BRING DEVIATIONS TO ENGINEER'S ATTENTION.
2. DEMOLITION AND SEQUENCE OF CONSTRUCTION SHALL BE AS PER THE CONTRACT DOCUMENTS.
3. CROSS HATCHING IS USED TO INDICATE SCHEMATICALLY THE ITEMS TO BE REMOVED DURING THIS PHASE. THE CONTRACTOR SHALL LOCATE PIPING CONNECTIONS AND UTILIZE PIPING JOINTS WHERE POSSIBLE TO INTERCEPT THE EXISTING PIPING TO FACILITATE CONNECTION TO NEW PROCESS LINES.
4. REMOVE ALL EXPOSED REBAR AND ANCHOR BOLTS WHICH ARE TO BE REMOVED A MINIMUM OF 1-1/2 INCHES BELOW SURFACE OF REMAINING CONCRETE. FILL ALL VOIDS WITH GROUT CONTAINING A LATEX BONDING AGENT IN ACCORDANCE WITH THE SPECIFICATIONS. GROUTING OPERATIONS SHALL PRODUCE AN EVEN FINISH VERTICALLY PLUMB TO RECEIVE THE NEW FRAMING. THE GROUTING OPERATION SHALL NOT REDUCE THE SIZE OF OPENINGS.
5. CONTRACTOR SHALL PROPERLY AND THOROUGHLY CLEAN ALL CONCRETE, PIPE AND OTHER APPURTENANCES THAT SHALL REMAIN.
6. REMOVE ALL ELECTRICAL AND INSTRUMENT CONDUIT, WIRING AND CABLE, TO THE POINT OF ORIGIN ASSOCIATED WITH ALL EQUIPMENT AND INSTRUMENTATION REMOVED.
7. REMOVE ALL PIPING ASSOCIATED WITH DEMOLISHED EQUIPMENT UNLESS OTHERWISE NOTED.
8. SOME OF THE PIPING AND EQUIPMENT SHOWN TO BE DEMOLISHED HAS BEEN PREVIOUSLY REMOVED OR PARTIALLY DISMANTLED. THE CONTRACTOR SHALL REMOVE ALL REMAINING EQUIPMENT, PIPING AND CONCRETE PEDESTALS.
9. THE CONTRACTOR SHALL REMOVE ALL SURPLUS CONCRETE PEDESTALS TO A MINIMUM OF 1-1/2" BELOW THE SURFACE OF THE EXISTING FLOOR AND ALL SURFACES SHALL BE REPAIRED USING GROUT CONTAINING A LATEX BONDING AGENT IN ACCORDANCE WITH THE SPECIFICATIONS. UNDERGROUND FACILITIES SHOWN TO BE DEMOLISHED MAY BE FILLED, PLUGGED, AND ABANDONED IN PLACE OR REMOVED FORM THE SITE UNLESS SPECIFICALLY NOTED TO BE REMOVED.
10. ALL UNDERGROUND FACILITIES SHOWN TO BE DEMOLISHED MAY BE FILLED, PLUGGED, AND ABANDONED IN PLACE UNLESS SPECIFICALLY NOTED TO BE REMOVED.
11. PRESERVE AND PROTECT REBAR WHERE IT IS SHOWN TO BE REUSED. DO NOT OVERCUT CORNERS OF OPENINGS. DO NOT CUT THE REBAR AS THE CONCRETE IS BEING REMOVED. USE BONDING AGENT AND PREMOLDED SELF-ADHESIVE WATERSTOP WHERE CONDITIONS REQUIRE THEIR USE.
12. ALL PIPE HANGERS MOUNTING BRACKETS ARE TO BE LEFT IN PLACE.
13. WHERE DEMOLTION ACTIVITIES LEAVE ANY OPENINGS IN THE GRATING, WALKWAYS, OR WORK PLATFORMS LARGER THAN 3 INCHES, GRATING SHALL BE INSTALLED TO COVER THE OPENING. THE GRATING MUST MATCH THE EXISTING GRATING AND MUST NOT PRESENT A TRIP HAZARD.
14. THE BELOW GRADE DRAIN PIPES AND SURFACE INLETS SHALL REMAIN IN PLACE AND OPERATIONAL.

ORIGINAL SCALE IN INCHES FOR REDUCED PLANS

JOB NO. 3304-DS-2

CITY OF HOUSTON
DEPARTMENT OF PUBLIC WORKS

ALMEDA SIMS
SLUDGE DISPOSAL PLANT
PNEUMATIC CONVEYING, STORAGE AND LOADING FACILITIES

STORAGE FACILITIES
EAST ELEVATION

RECOMMENDED FOR APPROVAL:
Kenneth R. Hinckley
BINKLEY & HOLMES, INC. CONSULTING ENGINEERS

APPROVED:
WASTEWATER
WATER
PAVING
CONSTRUCTION
STORM SEWER
ASST. DIRECTOR
DIRECTOR

DESIGNED BY: J.A.J. SCALE: 3/16"=1'-0"
DRAWN BY: B.J.L. DATE: APRIL 1980
CHECKED BY: K.R.L. DRAWING NO.
SHEET SHEET NO. 21 OF 51

PRIVATE UTILITY LINES SHOWN

ENTEX, INC.

SOUTHWESTERN BELL TELEPHONE COMPANY
Valid for one year only.

HOUSTON LIGHTING & POWER CO.
Approval only for crossing underground ductlines unless noted. Valid for one year only.

REV NO	DESCRIPTION	APP'D	DATE

SEAL
AS-BUILT
Darrell Ross
1/25/02

SEAL
STATE OF TEXAS
KENNETH R. HINCKLEY
REGISTERED
PROFESSIONAL ENGINEER

RATNALA & BAHL, INC.
Engineers • Architects • Surveyors
11767 KATY FREEWAY, SUITE 510
HOUSTON, TEXAS 77079

CH2M HILL
7600 West Tidwell Road, Suite 400
Houston Tx 77040
713.462.0161

Binkley & Barfield, Inc.
Consulting Engineers
1710 Seamist Drive Houston, Texas 77008

ALMEDA SIMS
BIOSOLIDS
DRYER REHABILITATION

CIP NO 0298-05-3
FILE NO: 4289-4

DEMOLITION PLAN
STORAGE FACILITIES
EAST ELEVATION

CITY OF HOUSTON
DEPARTMENT OF PUBLIC WORKS AND ENGINEERING
ENGINEERING, CONSTRUCTION AND REAL ESTATE GROUP

SECTION APPROVALS

WATER ENGINEERING
TRAFFIC AND SIGNAL ENGINEERING
WASTEWATER ENGINEERING — 2-25-99
STREET & BRIDGE ENGINEERING
STORMWATER ENGINEERING
CONSTRUCTION — 3/1/99
2-25-99

OTHER DEPARTMENTS

PLANNING AND DEVELOPMENT
SPONSOR DEPARTMENT
CITY ENGINEER — 3-2-99 DATE
DIRECTOR OF PUBLIC WORKS AND ENGINEERING — 3/8/99 DATE

SUBMITTED:
SCALE: AS NOTED
DATE:
SURVEY BY: N/A
F B NO:

DESIGNED BY: WLW
DRAWN BY: WLW
DWG. NO. : D-31
SHT NO 107 of 159 SHTS
CITY DWG NO: 35001

CADD DWG FILE NO :F:/64305/NONE
FILE DATE-OPERATOR: NONE

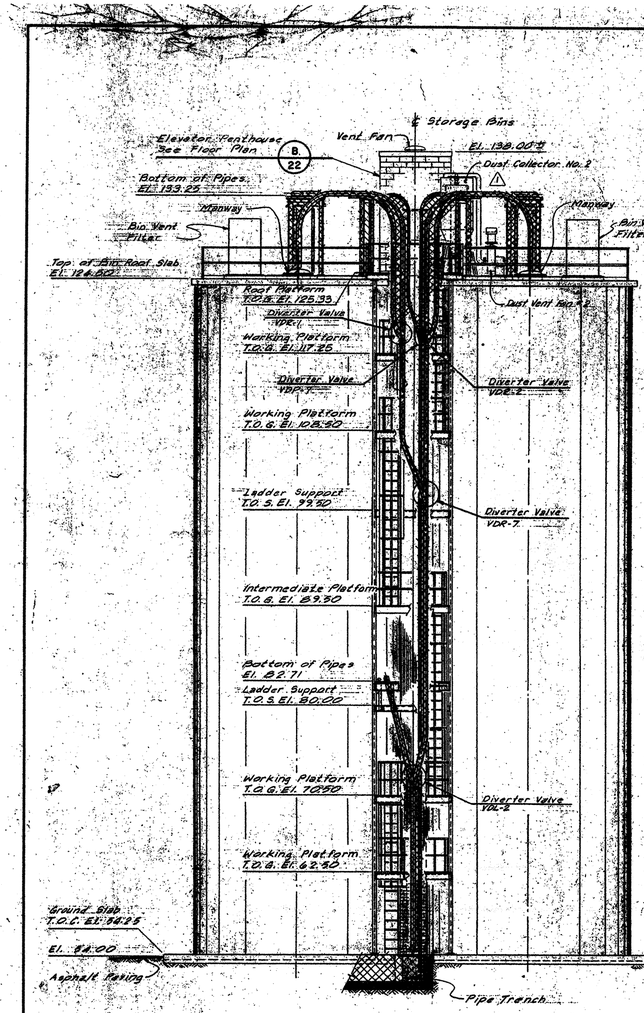

NORTH ELEVATION A 22
SCALE: 3/16" = 1'-0"

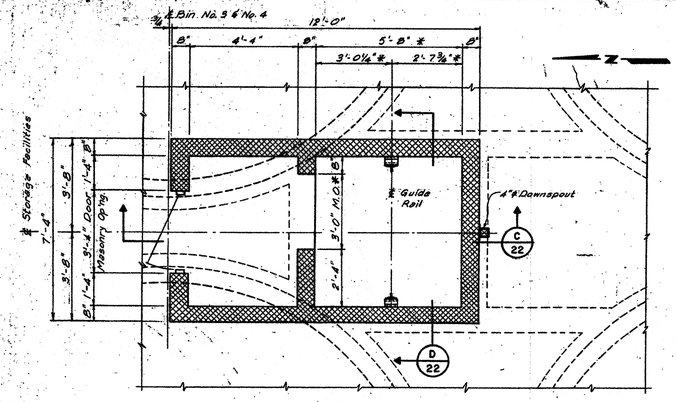

PENTHOUSE FLOOR PLAN B 22
SCALE: 1/2" = 1'-0"

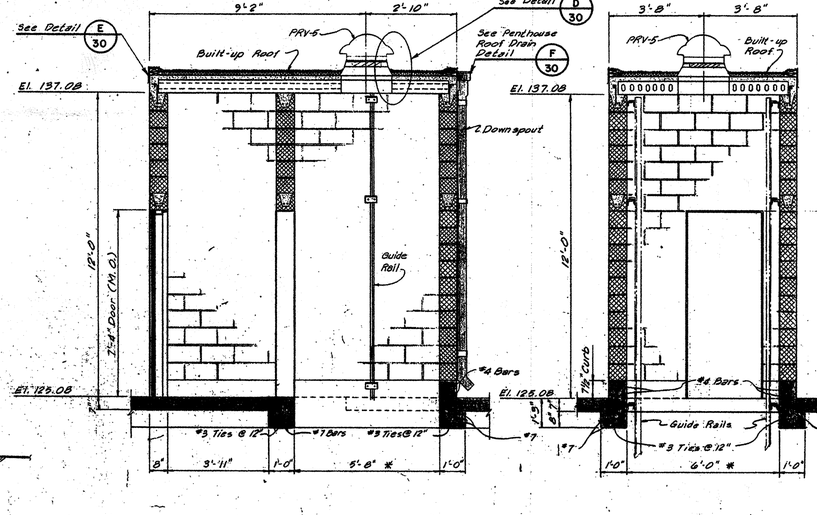

SECTION C 22
SCALE: 1/2" = 1'-0"

SECTION D 22
SCALE: 1/2" = 1'-0"

NOTE:
* Dimensions for Elevator Opening as required by Elevator Manufacturer.

NO	DATE	REVISION	APPROVED BINKLEY & BARFIELD	APPROVED CITY OF HOUSTON
1	Jan. '82	Added Dust Collector No. 2		

JOB NO. 8304-08-2
DESIGNED BY: W.L.W. & B.J.L.R. SCALE: AS SHOWN
DRAWN BY: B.J.L. DATE: APRIL, 1980
CHECKED BY: K.R.L. DRAWING NO.
SHEET SHEET NO. 22 OF 51

CITY OF HOUSTON
DEPARTMENT OF PUBLIC WORKS

ALMEDA SIMS
SLUDGE DISPOSAL PLANT
PNEUMATIC CONVEYING, STORAGE AND LOADING FACILITIES

STORAGE FACILITIES
NORTH ELEVATION AND
PENTHOUSE PLAN AND SECTIONS

RECOMMENDED FOR APPROVAL:
BINKLEY & HOLMES INC. CONSULTING ENGINEERS

APPROVED:
WASTEWATER
WATER
STORM SEWER
ASST. DIRECTOR
PAVING
CONSTRUCTION
DIRECTOR

PRIVATE UTILITY LINES SHOWN

ENTEX, INC.

SOUTHWESTERN BELL TELEPHONE COMPANY
Valid for one year only.

HOUSTON LIGHTING & POWER CO.
Approval only for crossing underground ductlines unless noted. Valid for one year only.

REV NO	DESCRIPTION	APP'D	DATE

SEAL
AS-BUILT
Darrell Ross 1/25/02

SEAL
STATE OF TEXAS
DARRELL ROSS
RATNALA
90056
REGISTERED PROFESSIONAL ENGINEER

RATNALA & BAHL, INC.
Engineers • Architects • Surveyors
11767 KATY FREEWAY, SUITE 510
HOUSTON, TEXAS 77079

CH2M HILL
7600 West Tidwell Road, Suite 400
Houston Tx 77040
713.462.0161

Binkley & Barfield, Inc.
Consulting Engineers
1710 Seamist Drive Houston, Texas 77008

ALMEDA SIMS
BIOSOLIDS
DRYER REHABILITATION

CIP NO 0298-05-3
FILE NO: 4289-4

DEMOLITION PLAN
STORAGE FACILITIES
PENTHOUSE PLAN AND SECTIONS

CITY OF HOUSTON
DEPARTMENT OF PUBLIC WORKS AND ENGINEERING
ENGINEERING, CONSTRUCTION AND REAL ESTATE GROUP

SECTION APPROVALS

WATER ENGINEERING
TRAFFIC AND SIGNAL ENGINEERING
WASTEWATER ENGINEERING
STREET & BRIDGE ENGINEERING
STORMWATER ENGINEERING
CONSTRUCTION 3/2/99

OTHER DEPARTMENTS

PLANNING AND DEVELOPMENT
SPONSOR DEPARTMENT

CITY ENGINEER 3-2-99 DATE
DIRECTOR OF PUBLIC WORKS AND ENGINEERING 3/5/99 DATE

SUBMITTED:
SCALE: AS NOTED
DATE:
SURVEY BY: N/A
F B NO:

DESIGNED BY: WLW
DRAWN BY: WLW
DWG. NO. :D-32
SHT NO 108 of 159 SHTS
CITY DWG NO: 35001

SCALE: 3 IN. = 1 FT.
SCALE: 1½ IN. = 1 FT.
SCALE: ½ IN. = 1 FT.
ORIGINAL SCALE IN INCHES FOR REDUCED PLANS

NOTES:

1. ALL FACILITIES SHOWN ARE EXISTING UNLESS OTHERWISE NOTED. DATA SHOWN FOR EXISTING FACILITIES IS TAKEN FROM CITY OF HOUSTON RECORD DRAWINGS. CONTRACTOR SHALL FIELD VERIFY ALL DIMENSIONS, ELEVATIONS AND ALL OTHER DATA PRIOR TO START OF WORK AND PROMPTLY BRING DEVIATIONS TO ENGINEER'S ATTENTION.
2. DEMOLITION AND SEQUENCE OF CONSTRUCTION SHALL BE AS PER THE CONTRACT DOCUMENTS.
3. CROSS HATCHING IS USED TO INDICATE SCHEMATICALLY THE ITEMS TO BE REMOVED DURING THIS PHASE. THE CONTRACTOR SHALL LOCATE PIPING CONNECTIONS AND UTILIZE PIPING JOINTS WHERE POSSIBLE TO INTERCEPT THE EXISTING PIPING TO FACILITATE CONNECTION TO NEW PROCESS LINES.
4. REMOVE ALL EXPOSED REBAR AND ANCHOR BOLTS WHICH ARE TO BE REMOVED A MINIMUM OF 1–1/2 INCHES BELOW SURFACE OF REMAINING CONCRETE. FILL ALL VOIDS WITH GROUT CONTAINING A LATEX BONDING AGENT IN ACCORDANCE WITH THE SPECIFICATIONS. GROUTING OPERATIONS SHALL PRODUCE AN EVEN FINISH VERTICALLY PLUMB TO RECEIVE THE NEW FRAMING. THE GROUTING OPERATION SHALL NOT REDUCE THE SIZE OF OPENINGS.
5. CONTRACTOR SHALL PROPERLY AND THOROUGHLY CLEAN ALL CONCRETE, PIPE AND OTHER APPURTENANCES THAT SHALL REMAIN.
6. REMOVE ALL ELECTRICAL AND INSTRUMENT CONDUIT, WIRING AND CABLE, TO THE POINT OF ORIGIN ASSOCIATED WITH ALL EQUIPMENT AND INSTRUMENTATION REMOVED.
7. REMOVE ALL PIPING ASSOCIATED WITH DEMOLISHED EQUIPMENT UNLESS OTHERWISE NOTED.
8. SOME OF THE PIPING AND EQUIPMENT SHOWN TO BE DEMOLISHED HAS BEEN PREVIOUSLY REMOVED OR PARTIALLY DISMANTLED. THE CONTRACTOR SHALL REMOVE ALL REMAINING EQUIPMENT, PIPING AND CONCRETE PEDESTALS.
9. THE CONTRACTOR SHALL REMOVE ALL SURPLUS CONCRETE PEDESTALS TO A MINIMUM OF 1–1/2" BELOW THE SURFACE OF THE EXISTING FLOOR AND ALL SURFACES SHALL BE REPAIRED USING GROUT CONTAINING A LATEX BONDING AGENT IN ACCORDANCE WITH THE SPECIFICATIONS. UNDERGROUND FACILITIES SHOWN TO BE DEMOLISHED MAY BE FILLED, PLUGGED, AND ABANDONED IN PLACE OR REMOVED FORM THE SITE UNLESS SPECIFICALLY NOTED TO BE REMOVED.
10. ALL UNDERGROUND FACILITIES SHOWN TO BE DEMOLISHED MAY BE FILLED, PLUGGED, AND ABANDONED IN PLACE UNLESS SPECIFICALLY NOTED TO BE REMOVED.
11. PRESERVE AND PROTECT REBAR WHERE IT IS SHOWN TO BE REUSED. DO NOT OVERCUT CORNERS OF OPENINGS. DO NOT CUT THE REBAR AS THE CONCRETE IS BEING REMOVED. USE BONDING AGENT AND PREMOLDED SELF–ADHESIVE WATERSTOP WHERE CONDITIONS REQUIRE THEIR USE.
12. ALL PIPE HANGERS MOUNTING BRACKETS ARE TO BE LEFT IN PLACE.
13. WHERE DEMOLTION ACTIVITIES LEAVE ANY OPENINGS IN THE GRATING, WALKWAYS, OR WORK PLATFORMS LARGER THAN 3 INCHES, GRATING SHALL BE INSTALLED TO COVER THE OPENING. THE GRATING MUST MATCH THE EXISTING GRATING AND MUST NOT PRESENT A TRIP HAZARD.
14. THE BELOW GRADE DRAIN PIPES AND SURFACE INLETS SHALL REMAIN IN PLACE AND OPERATIONAL.

CADD DWG FILE NO :F:/64305/NONE
FILE DATE-OPERATOR: NONE

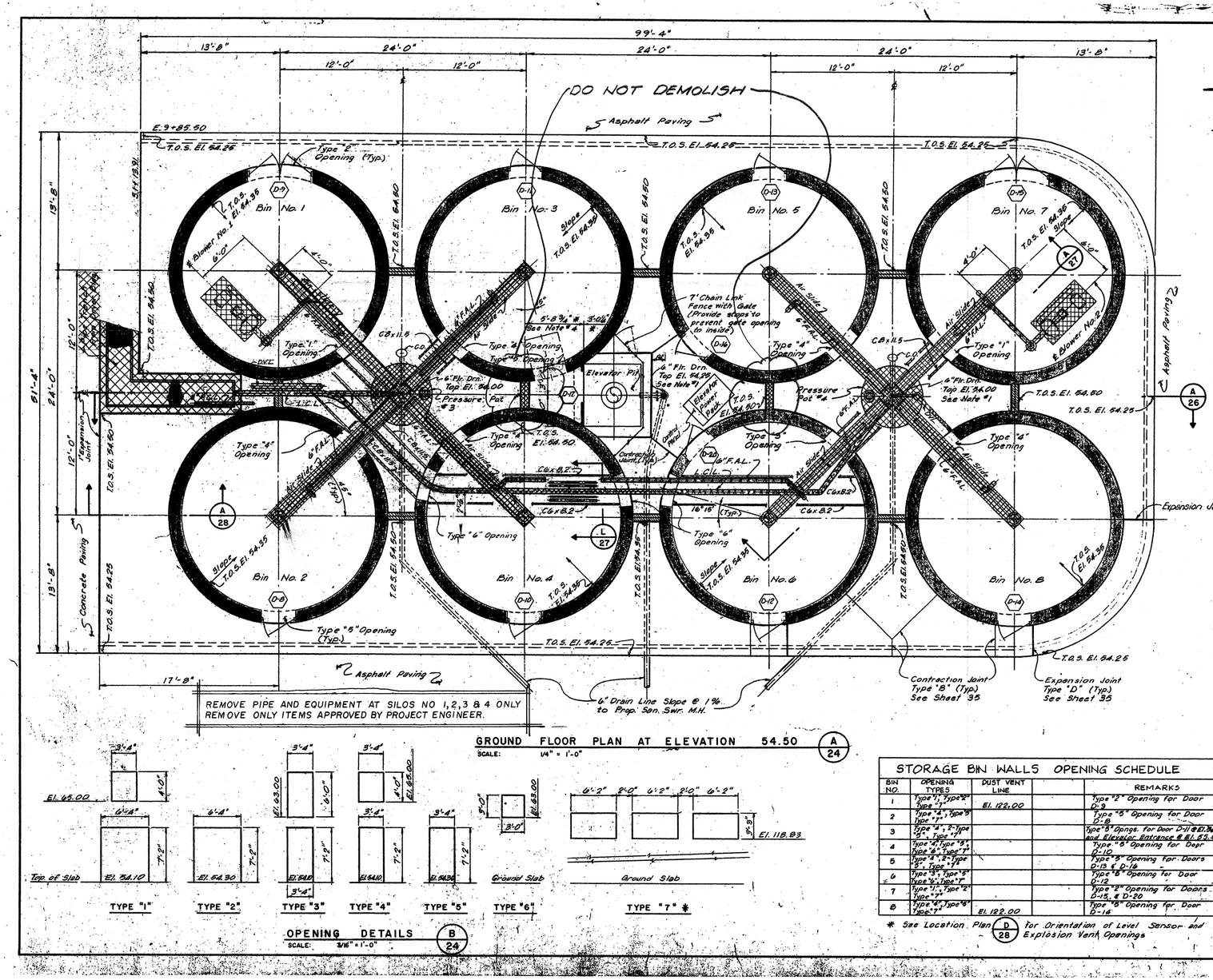

NOTES:

1. Floor Drain shall be Josam #32004, Zurn or Equal.
2. "P" Traps shall be Josam #1950, Zurn or Equal.
3. The Contractor may use Expansion Anchors for Pipe Support below El. 66.50
4. # Location of Jack Casing as required by Elevator Manufacturer.
5. Contraction Joints for Concrete Pavement Area Between Storage Bins shall be in Line with Air Slides.

STORAGE BIN WALLS OPENING SCHEDULE

BIN NO.	OPENING TYPES	DUST VENT LINE		REMARKS
1	Type "1", Type "2", Type "7"	El. 122.00		Type "2" Opening for Door D-9
2	Type "4", Type "5", Type "7"			Type "5" Opening for Door D-18
3	Type "4", 2-Type "5", Type "7"			Type "5" Openge. for Door D-11 @ El. 54.10 and Elevator Entrance @ El. 53.08
4	Type "4", Type "5", Type "6", Type "7"			Type "6" Opening for Door D-10
5	Type "4", 2-Type "5", Type "7"			Type "5" Opening for Doors D-13 & D-16
6	Type "5", Type "6", Type "6", Type "7"			Type "6" Opening for Door D-12
7	Type "1", Type "2", Type "7"			Type "2" Opening for Doors D-15, & D-20
8	Type "4", Type "6", Type "7"	El. 122.00		Type "6" Opening for Door D-14

* See Location Plan (D/28) for Orientation of Level Sensor and Explosion Vent Openings

PRIVATE UTILITY LINES SHOWN

ENTEX, INC.

SOUTHWESTERN BELL TELEPHONE COMPANY
Valid for one year only.

HOUSTON LIGHTING & POWER CO.
Approval only for crossing underground ductlines unless noted. Valid for one year only.

REV NO	DESCRIPTION	APP'D	DATE

SEAL
AS-BUILT
Darrell Ross
1/25/02

SEAL
STATE OF TEXAS
RATNALA
36051
REGISTERED PROFESSIONAL ENGINEER

RATNALA & BAHL, INC.
Engineers • Architects • Surveyors
11767 KATY FREEWAY, SUITE 510
HOUSTON, TEXAS 77079

CH2M HILL
7600 West Tidwell Road, Suite 400
Houston Tx 77040
713.462.0161

Binkley & Barfield, Inc.
Consulting Engineers
1710 Seamist Drive Houston, Texas 77008

JOB NO. 3304-06-2

CITY OF HOUSTON
DEPARTMENT OF PUBLIC WORKS

ALMEDA SIMS
SLUDGE DISPOSAL PLANT
PNEUMATIC CONVEYING, STORAGE AND LOADING FACILITIES

STORAGE FACILITIES
GROUND FLOOR PLAN

RECOMMENDED FOR APPROVAL:
Kenneth R. Kinsley
BINKLEY & HOLMES, INC. CONSULTING ENGINEERS

APPROVED:
WASTEWATER
WATER
STORM SEWER
ASST. DIRECTOR
PAVING
CONSTRUCTION
DIRECTOR

DESIGNED BY: L.A.J., B.J.L. SCALE: AS SHOWN
DRAWN BY: B.J.L. DATE: APRIL 1980
CHECKED BY: K.R.L. DRAWING NO.
SHEET SHEET NO. 24 OF 51

ALMEDA SIMS
BIOSOLIDS
DRYER REHABILITATION

CIP NO 0298-05-3
FILE NO: 4289-4

DEMOLITION PLAN
STORAGE FACILITIES
GROUND FLOOR PLAN

CITY OF HOUSTON
DEPARTMENT OF PUBLIC WORKS AND ENGINEERING
ENGINEERING, CONSTRUCTION AND REAL ESTATE GROUP

SECTION APPROVALS

WATER ENGINEERING
TRAFFIC AND SIGNAL ENGINEERING
WASTEWATER ENGINEERING
STREET & BRIDGE ENGINEERING
STORMWATER ENGINEERING
CONSTRUCTION

OTHER DEPARTMENTS

PLANNING AND DEVELOPMENT
SPONSOR DEPARTMENT

CITY ENGINEER — DATE 3-2-99
DIRECTOR OF PUBLIC WORKS AND ENGINEERING — DATE 3/5/99

SUBMITTED:
SCALE: AS NOTED
DATE:
SURVEY BY: N/A
F B NO:

DESIGNED BY: WLW
DRAWN BY: WLW
DWG. NO. : D-33
SHT NO 109 OF 159 SHTS
CITY DWG NO: 35001

NOTES:

1. ALL FACILITIES SHOWN ARE EXISTING UNLESS OTHERWISE NOTED. DATA SHOWN FOR EXISTING FACILITIES IS TAKEN FROM CITY OF HOUSTON RECORD DRAWINGS. CONTRACTOR SHALL FIELD VERIFY ALL DIMENSIONS, ELEVATIONS AND ALL OTHER DATA PRIOR TO START OF WORK AND PROMPTLY BRING DEVIATIONS TO ENGINEER'S ATTENTION.
2. DEMOLITION AND SEQUENCE OF CONSTRUCTION SHALL BE AS PER THE CONTRACT DOCUMENTS.
3. CROSS HATCHING IS USED TO INDICATE SCHEMATICALLY THE ITEMS TO BE REMOVED DURING THIS PHASE. THE CONTRACTOR SHALL LOCATE PIPING CONNECTIONS AND UTILIZE PIPING JOINTS WHERE POSSIBLE TO INTERCEPT THE EXISTING PIPING TO FACILITATE CONNECTION TO NEW PROCESS LINES.
4. REMOVE ALL EXPOSED REBAR AND ANCHOR BOLTS WHICH ARE TO BE REMOVED A MINIMUM OF 1-1/2 INCHES BELOW SURFACE OF REMAINING CONCRETE. FILL ALL VOIDS WITH GROUT CONTAINING A LATEX BONDING AGENT IN ACCORDANCE WITH THE SPECIFICATIONS. GROUTING OPERATIONS SHALL PRODUCE AN EVEN FINISH VERTICALLY PLUMB TO RECEIVE THE NEW FRAMING. THE GROUTING OPERATION SHALL NOT REDUCE THE SIZE OF OPENINGS.
5. CONTRACTOR SHALL PROPERLY AND THOROUGHLY CLEAN ALL CONCRETE, PIPE AND OTHER APPURTENANCES THAT SHALL REMAIN.
6. REMOVE ALL ELECTRICAL AND INSTRUMENT CONDUIT, WIRING AND CABLE, TO THE POINT OF ORIGIN ASSOCIATED WITH ALL EQUIPMENT AND INSTRUMENTATION REMOVED.
7. REMOVE ALL PIPING ASSOCIATED WITH DEMOLISHED EQUIPMENT UNLESS OTHERWISE NOTED.
8. SOME OF THE PIPING AND EQUIPMENT SHOWN TO BE DEMOLISHED HAS BEEN PREVIOUSLY REMOVED OR PARTIALLY DISMANTLED. THE CONTRACTOR SHALL REMOVE ALL REMAINING EQUIPMENT, PIPING AND CONCRETE PEDESTALS.
9. THE CONTRACTOR SHALL REMOVE ALL SURPLUS CONCRETE PEDESTALS TO A MINIMUM OF 1-1/2" BELOW THE SURFACE OF THE EXISTING FLOOR AND ALL SURFACES SHALL BE REPAIRED USING GROUT CONTAINING A LATEX BONDING AGENT IN ACCORDANCE WITH THE SPECIFICATIONS. UNDERGROUND FACILITIES SHOWN TO BE DEMOLISHED MAY BE FILLED, PLUGGED, AND ABANDONED IN PLACE OR REMOVED FORM THE SITE UNLESS SPECIFICALLY NOTED TO BE REMOVED.
10. ALL UNDERGROUND FACILITIES SHOWN TO BE DEMOLISHED MAY BE FILLED, PLUGGED, AND ABANDONED IN PLACE UNLESS SPECIFICALLY NOTED TO BE REMOVED.
11. PRESERVE AND PROTECT REBAR WHERE IT IS SHOWN TO BE REUSED. DO NOT OVERCUT CORNERS OF OPENINGS. DO NOT CUT THE REBAR AS THE CONCRETE IS BEING REMOVED. USE BONDING AGENT AND PREMOLDED SELF-ADHESIVE WATERSTOP WHERE CONDITIONS REQUIRE THEIR USE.
12. ALL PIPE HANGERS MOUNTING BRACKETS ARE TO BE LEFT IN PLACE, UNLESS NOTED OTHERWISE.
13. WHERE DEMOLTION ACTIVITIES LEAVE ANY OPENINGS IN THE GRATING, WALKWAYS, OR WORK PLATFORMS LARGER THAN 3 INCHES, GRATING SHALL BE INSTALLED TO COVER THE OPENING. THE GRATING MUST MATCH THE EXISTING GRATING AND MUST NOT PRESENT A TRIP HAZARD.
14. THE BELOW GRADE DRAIN PIPES AND SURFACE INLETS SHALL REMAIN IN PLACE AND OPERATIONAL.

ORIGINAL SCALE IN INCHES FOR REDUCED PLANS
0 1 2 3

CADD DWG FILE NO : F:/64305/NONE
FILE DATE—OPERATOR: NONE

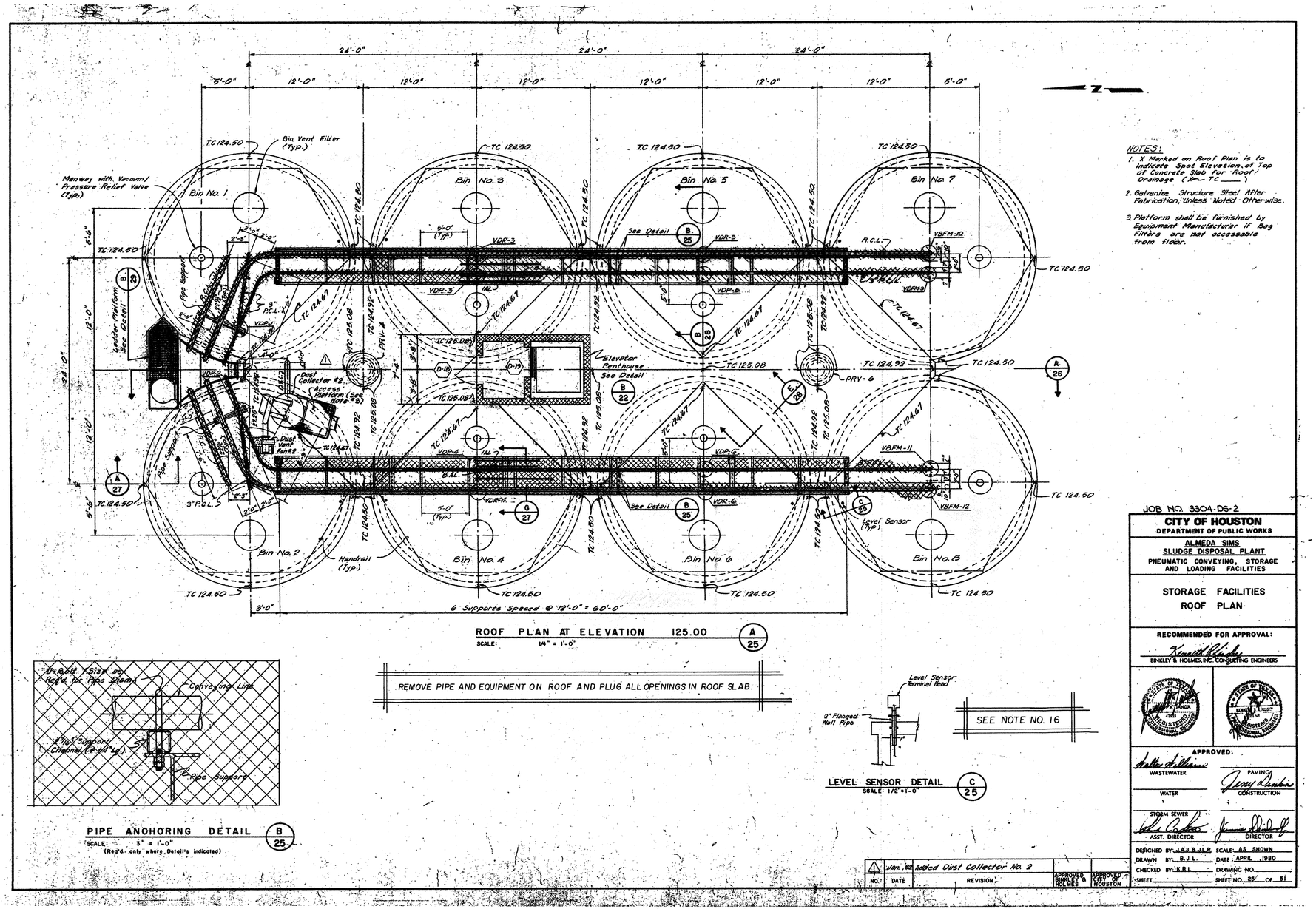

ROOF PLAN AT ELEVATION 125.00 (A 25)
SCALE: 1/4" = 1'-0"

REMOVE PIPE AND EQUIPMENT ON ROOF AND PLUG ALL OPENINGS IN ROOF SLAB.

PIPE ANCHORING DETAIL (B 25)
SCALE: 3" = 1'-0"
(Req'd. only where Detail is indicated)

SEE NOTE NO. 16

LEVEL SENSOR DETAIL (C 25)
SCALE: 1/2" = 1'-0"

NOTES:

1. X Marked on Roof Plan is to Indicate Spot Elevation of Top of Concrete Slab for Roof Drainage (X— TC ____)
2. Galvanize Structure Steel After Fabrication, Unless Noted Otherwise.
3. Platform shall be furnished by Equipment Manufacturer if Bag Filters are not accessable from floor.

NO.	DATE	REVISION	APPROVED BINKLEY & HOLMES	APPROVED CITY HOUSTON
1	Jan '02	Added Dust Collector No. 8		

JOB NO. 3304-D5-2

CITY OF HOUSTON
DEPARTMENT OF PUBLIC WORKS
ALMEDA SIMS
SLUDGE DISPOSAL PLANT
PNEUMATIC CONVEYING, STORAGE AND LOADING FACILITIES

STORAGE FACILITIES
ROOF PLAN

RECOMMENDED FOR APPROVAL:
Kenneth Bradley
BINKLEY & HOLMES, INC. CONSULTING ENGINEERS

APPROVED:
WASTEWATER — Walter Williams
WATER
STORM SEWER
ASST. DIRECTOR
PAVING — Jerry Dickinson
CONSTRUCTION
DIRECTOR

DESIGNED BY: L.A.S. & L.R. SCALE: AS SHOWN
DRAWN BY: B.J.L. DATE: APRIL 1980
CHECKED BY: K.R.L. DRAWING NO.
SHEET SHEET NO. 25 OF 51

PRIVATE UTILITY LINES SHOWN

ENTEX, INC.

SOUTHWESTERN BELL TELEPHONE COMPANY
Valid for one year only.

HOUSTON LIGHTING & POWER CO.
Approval only for crossing underground ductlines unless noted. Valid for one year only.

REV NO	DESCRIPTION	APP'D	DATE

SEAL — AS-BUILT Dan Ross 1/25/02

SEAL — STATE OF TEXAS, Dan Ratnala, 38055, REGISTERED PROFESSIONAL ENGINEER, 2/21/95

RATNALA & BAHL, INC.
Engineers • Architects • Surveyors
11767 KATY FREEWAY, SUITE 510
HOUSTON, TEXAS 77079

CH2M HILL
7600 West Tidwell Road, Suite 400
Houston Tx 77040
713.462.0161

Binkley & Barfield, Inc.
Consulting Engineers
1710 Seamist Drive Houston, Texas 77008

ALMEDA SIMS
BIOSOLIDS
DRYER REHABILITATION

CIP NO 0298-05-3
FILE NO: 4289-4

DEMOLITION PLAN
STORAGE FACILITIES
ROOF PLAN

CITY OF HOUSTON
DEPARTMENT OF PUBLIC WORKS AND ENGINEERING
ENGINEERING, CONSTRUCTION AND REAL ESTATE GROUP

SECTION APPROVALS

WATER ENGINEERING
TRAFFIC AND SIGNAL ENGINEERING
WASTEWATER ENGINEERING
STREET & BRIDGE ENGINEERING
STORMWATER ENGINEERING
CONSTRUCTION 3/12/99
Zia Yalo 2/25/99

OTHER DEPARTMENTS

PLANNING AND DEVELOPMENT
SPONSOR DEPARTMENT
CITY ENGINEER — Herbert D. Lum — 3-2-99 DATE
DIRECTOR OF PUBLIC WORKS AND ENGINEERING — 3/5/99 DATE

SUBMITTED:
SCALE: AS NOTED
DATE:
SURVEY BY: N/A
F B NO:

DESIGNED BY: WLW
DRAWN BY: WLW
DWG. NO. : D-34
SHT NO 110 of 159 SHTS
CITY DWG NO: 35001

NOTES:

1. ALL FACILITIES SHOWN ARE EXISTING UNLESS OTHERWISE NOTED. DATA SHOWN FOR EXISTING FACILITIES IS TAKEN FROM CITY OF HOUSTON RECORD DRAWINGS. CONTRACTOR SHALL FIELD VERIFY ALL DIMENSIONS, ELEVATIONS AND ALL OTHER DATA PRIOR TO START OF WORK AND PROMPTLY BRING DEVIATIONS TO ENGINEER'S ATTENTION.
2. DEMOLITION AND SEQUENCE OF CONSTRUCTION SHALL BE AS PER THE CONTRACT DOCUMENTS.
3. CROSS HATCHING IS USED TO INDICATE SCHEMATICALLY THE ITEMS TO BE REMOVED DURING THIS PHASE. THE CONTRACTOR SHALL LOCATE PIPING CONNECTIONS AND UTILIZE PIPING JOINTS WHERE POSSIBLE TO INTERCEPT THE EXISTING PIPING TO FACILITATE CONNECTION TO NEW PROCESS LINES.
4. REMOVE ALL EXPOSED REBAR AND ANCHOR BOLTS WHICH ARE TO BE REMOVED A MINIMUM OF 1-1/2 INCHES BELOW SURFACE OF REMAINING CONCRETE. FILL ALL VOIDS WITH GROUT CONTAINING A LATEX BONDING AGENT IN ACCORDANCE WITH THE SPECIFICATIONS. GROUTING OPERATIONS SHALL PRODUCE AN EVEN FINISH VERTICALLY PLUMB TO RECEIVE THE NEW FRAMING. THE GROUTING OPERATION SHALL NOT REDUCE THE SIZE OF OPENINGS.
5. CONTRACTOR SHALL PROPERLY AND THOROUGHLY CLEAN ALL CONCRETE, PIPE AND OTHER APPURTENANCES THAT SHALL REMAIN.
6. REMOVE ALL ELECTRICAL AND INSTRUMENT CONDUIT, WIRING AND CABLE, TO THE POINT OF ORIGIN ASSOCIATED WITH ALL EQUIPMENT AND INSTRUMENTATION REMOVED.
7. REMOVE ALL PIPING ASSOCIATED WITH DEMOLISHED EQUIPMENT UNLESS OTHERWISE NOTED.
8. SOME OF THE PIPING AND EQUIPMENT SHOWN TO BE DEMOLISHED HAS BEEN PREVIOUSLY REMOVED OR PARTIALLY DISMANTLED. THE CONTRACTOR SHALL REMOVE ALL REMAINING. EQUIPMENT, PIPING AND CONCRETE PEDESTALS.
9. THE CONTRACTOR SHALL REMOVE ALL SURPLUS CONCRETE PEDESTALS TO A MINIMUM OF 1-1/2" BELOW THE SURFACE OF THE EXISTING FLOOR AND ALL SURFACES SHALL BE REPAIRED USING GROUT CONTAINING A LATEX BONDING AGENT IN ACCORDANCE WITH THE SPECIFICATIONS. UNDERGROUND FACILITIES SHOWN TO BE DEMOLISHED MAY BE FILLED, PLUGGED, AND ABANDONED IN PLACE OR REMOVED FORM THE SITE UNLESS SPECIFICALLY NOTED TO BE REMOVED.
10. ALL UNDERGROUND FACILITIES SHOWN TO BE DEMOLISHED MAY BE FILLED, PLUGGED, AND ABANDONED IN PLACE UNLESS SPECIFICALLY NOTED TO BE REMOVED.
11. PRESERVE AND PROTECT REBAR WHERE IT IS SHOWN TO BE REUSED. DO NOT OVERCUT CORNERS OF OPENINGS. DO NOT CUT THE REBAR AS THE CONCRETE IS BEING REMOVED. USE BONDING AGENT AND PREMOLDED SELF-ADHESIVE WATERSTOP WHERE CONDITIONS REQUIRE THEIR USE.
12. ALL PIPE HANGERS MOUNTING BRACKETS ARE TO BE LEFT IN PLACE, UNLESS NOTED OTHERWISE.
13. WHERE DEMOLTION ACTIVITIES LEAVE ANY OPENINGS IN THE GRATING, WALKWAYS, OR WORK PLATFORMS LARGER THAN 3 INCHES, GRATING SHALL BE INSTALLED TO COVER THE OPENING. THE GRATING MUST MATCH THE EXISTING GRATING AND MUST NOT PRESENT A TRIP HAZARD.
14. THE BELOW GRADE DRAIN PIPES AND SURFACE INLETS SHALL REMAIN IN PLACE AND OPERATIONAL.
15. AFTER DEMOLITION OF PIPING, PLUG ALL HOLES IN SILO ROOFS.
16. LEVEL SENSOR AT SILO NO. 1 ONLY TO BE REPLACED.

ORIGINAL SCALE IN INCHES FOR REDUCED PLANS
0 1/4 1/2 1 1½ 2 3
SCALE: ½ IN. = 1 FT.
SCALE: 3 IN. = 1 FT.

CADD DWG FILE NO. : F:/64305.A\ONE
FILE DATE - OPERATOR: NONE

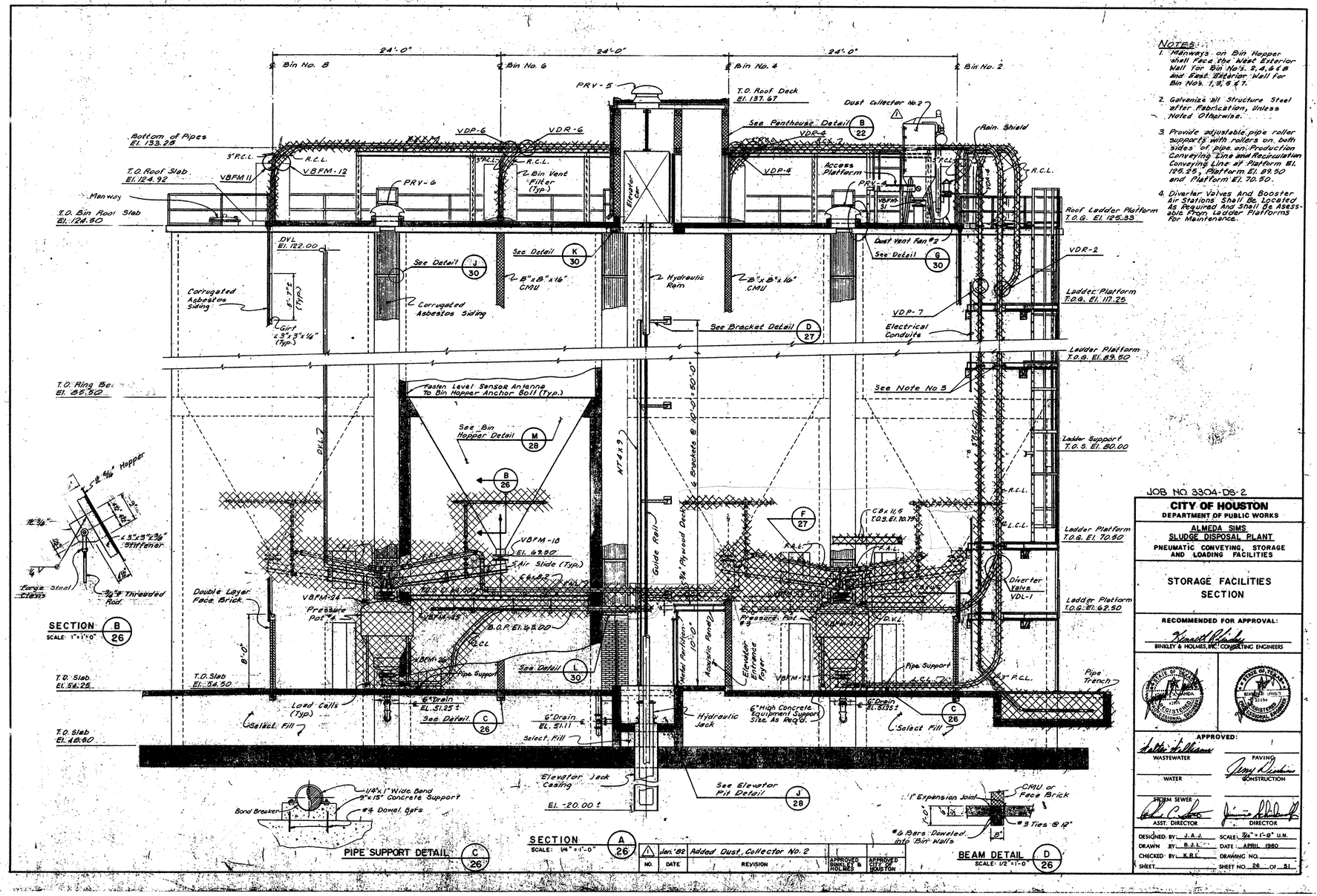

NOTES:

1. Manways on Bin Hopper shall Face the West Exterior Wall for Bin No's. 2, 4, & 6 & the East Exterior Wall for Bin No's. 1, 3, 5 & 7.
2. Galvanize all Structure Steel after Fabrication, Unless Noted Otherwise.
3. Provide adjustable pipe roller supports with rollers on both sides of pipe on Production Conveying Line and Recirculation Conveying Line at Platform El. 125.25, Platform El. 89.50 and Platform El. 70.50.
4. Diverter Valves and Booster Air Stations Shall Be Located As Required and Shall Be Accessible From Ladder Platforms For Maintenance.

PRIVATE UTILITY LINES SHOWN

ENTEX, INC.

SOUTHWESTERN BELL TELEPHONE COMPANY
Valid for one year only.

HOUSTON LIGHTING & POWER CO.
Approval only for crossing underground ductlines unless noted. Valid for one year only.

REV NO	DESCRIPTION	APP'D	DATE

SEAL — AS-BUILT — 1/25/02

SEAL

RATNALA & BAHL, INC.
Engineers • Architects • Surveyors
11767 KATY FREEWAY, SUITE 510
HOUSTON, TEXAS 77079

CH2M HILL
7600 West Tidwell Road, Suite 400
Houston Tx 77040
713.462.0161

Binkley & Barfield, Inc.
Consulting Engineers
1710 Seamist Drive Houston, Texas 77008

JOB NO. 3304-DS-2

CITY OF HOUSTON
DEPARTMENT OF PUBLIC WORKS

ALMEDA SIMS SLUDGE DISPOSAL PLANT
PNEUMATIC CONVEYING, STORAGE AND LOADING FACILITIES

STORAGE FACILITIES SECTION

RECOMMENDED FOR APPROVAL:
Kenneth Holmes
BINKLEY & HOLMES, INC. CONSULTING ENGINEERS

APPROVED:
WASTEWATER — Leslie A. Williams
PAVING — Jerry Rudine
WATER
CONSTRUCTION
STORM SEWER — ASST. DIRECTOR
DIRECTOR

DESIGNED BY J.A.J. SCALE: 3/16"=1'-0" U.N.
DRAWN BY B.J.L. DATE: APRIL 1980
CHECKED BY K.B.L. DRAWING NO.
SHEET SHEET NO. 26 OF 51

NO.	DATE	REVISION	APPROVED BINKLEY & HOLMES	APPROVED CITY OF HOUSTON
1	Jan.'82	Added Dust Collector No. 2		

ALMEDA SIMS
BIOSOLIDS
DRYER REHABILITATION

CIP NO 0298-05-3
FILE NO: 4289-4

DEMOLITION PLAN
STORAGE FACILITIES
SECTION

CITY OF HOUSTON
DEPARTMENT OF PUBLIC WORKS AND ENGINEERING
ENGINEERING, CONSTRUCTION AND REAL ESTATE GROUP

SECTION APPROVALS

WATER ENGINEERING — TRAFFIC AND SIGNAL ENGINEERING
WASTEWATER ENGINEERING — 2-25-99 — STREET & BRIDGE ENGINEERING
STORMWATER ENGINEERING — CONSTRUCTION — 3/2/99
2-25-99

OTHER DEPARTMENTS

PLANNING AND DEVELOPMENT — SPONSOR DEPARTMENT
CITY ENGINEER — 3-2-99 DATE
DIRECTOR OF PUBLIC WORKS AND ENGINEERING — 2/5/99 DATE

SUBMITTED:
SCALE: AS NOTED
DATE:
SURVEY BY: N/A
F B NO:

DESIGNED BY: WLW
DRAWN BY: WLW
DWG. NO. : D-35
SHT NO III of 159 SHTS
CITY DWG NO: 35001

NOTES:

1. ALL FACILITIES SHOWN ARE EXISTING UNLESS OTHERWISE NOTED. DATA SHOWN FOR EXISTING FACILITIES IS TAKEN FROM CITY OF HOUSTON RECORD DRAWINGS. CONTRACTOR SHALL FIELD VERIFY ALL DIMENSIONS, ELEVATIONS AND ALL OTHER DATA PRIOR TO START OF WORK AND PROMPTLY BRING DEVIATIONS TO ENGINEER'S ATTENTION.
2. DEMOLITION AND SEQUENCE OF CONSTRUCTION SHALL BE AS PER THE CONTRACT DOCUMENTS.
3. CROSS HATCHING IS USED TO INDICATE SCHEMATICALLY THE ITEMS TO BE REMOVED DURING THIS PHASE. THE CONTRACTOR SHALL LOCATE PIPING CONNECTIONS AND UTILIZE PIPING JOINTS WHERE POSSIBLE TO INTERCEPT THE EXISTING PIPING TO FACILITATE CONNECTION TO NEW PROCESS LINES.
4. REMOVE ALL EXPOSED REBAR AND ANCHOR BOLTS WHICH ARE TO BE REMOVED A MINIMUM OF 1-1/2 INCHES BELOW SURFACE OF REMAINING CONCRETE. FILL ALL VOIDS WITH GROUT CONTAINING A LATEX BONDING AGENT IN ACCORDANCE WITH THE SPECIFICATIONS. GROUTING OPERATIONS SHALL PRODUCE AN EVEN FINISH VERTICALLY PLUMB TO RECEIVE THE NEW FRAMING. THE GROUTING OPERATION SHALL NOT REDUCE THE SIZE OF OPENINGS.
5. CONTRACTOR SHALL PROPERLY AND THOROUGHLY CLEAN ALL CONCRETE, PIPE AND OTHER APPURTENANCES THAT SHALL REMAIN.
6. REMOVE ALL ELECTRICAL AND INSTRUMENT CONDUIT, WIRING AND CABLE, TO THE POINT OF ORIGIN ASSOCIATED WITH ALL EQUIPMENT AND INSTRUMENTATION REMOVED.
7. REMOVE ALL PIPING ASSOCIATED WITH DEMOLISHED EQUIPMENT UNLESS OTHERWISE NOTED.
8. SOME OF THE PIPING AND EQUIPMENT SHOWN TO BE DEMOLISHED HAS BEEN PREVIOUSLY REMOVED OR PARTIALLY DISMANTLED. THE CONTRACTOR SHALL REMOVE ALL REMAINING EQUIPMENT, PIPING AND CONCRETE PEDESTALS.
9. THE CONTRACTOR SHALL REMOVE ALL SURPLUS CONCRETE PEDESTALS TO A MINIMUM OF 1-1/2" BELOW THE SURFACE OF THE EXISTING FLOOR AND ALL SURFACES SHALL BE REPAIRED USING GROUT CONTAINING A LATEX BONDING AGENT IN ACCORDANCE WITH THE SPECIFICATIONS. UNDERGROUND FACILITIES SHOWN TO BE DEMOLISHED MAY BE FILLED, PLUGGED, AND ABANDONED IN PLACE OR REMOVED FORM THE SITE UNLESS SPECIFICALLY NOTED TO BE REMOVED.
10. ALL UNDERGROUND FACILITIES SHOWN TO BE DEMOLISHED MAY BE FILLED, PLUGGED, AND ABANDONED IN PLACE UNLESS SPECIFICALLY NOTED TO BE REMOVED.
11. PRESERVE AND PROTECT REBAR WHERE IT IS SHOWN TO BE REUSED. DO NOT OVERCUT CORNERS OF OPENINGS. DO NOT CUT THE REBAR AS THE CONCRETE IS BEING REMOVED. USE BONDING AGENT AND PREMOLDED SELF-ADHESIVE WATERSTOP WHERE CONDITIONS REQUIRE THEIR USE.
12. ALL PIPE HANGERS MOUNTING BRACKETS ARE TO BE LEFT IN PLACE, UNLESS NOTED OTHERWISE.
13. WHERE DEMOLTION ACTIVITIES LEAVE ANY OPENINGS IN THE GRATING, WALKWAYS, OR WORK PLATFORMS LARGER THAN 3 INCHES, GRATING SHALL BE INSTALLED TO COVER THE OPENING. THE GRATING MUST MATCH THE EXISTING GRATING AND MUST NOT PRESENT A TRIP HAZARD.
14. THE BELOW GRADE DRAIN PIPES AND SURFACE INLETS SHALL REMAIN IN PLACE AND OPERATIONAL.

ORIGINAL SCALE IN INCHES FOR REDUCED PLANS
0 1 2 3

CADD DWG FILE NO :F:/64305.NONE
FILE DATE--OPERATOR: NONE

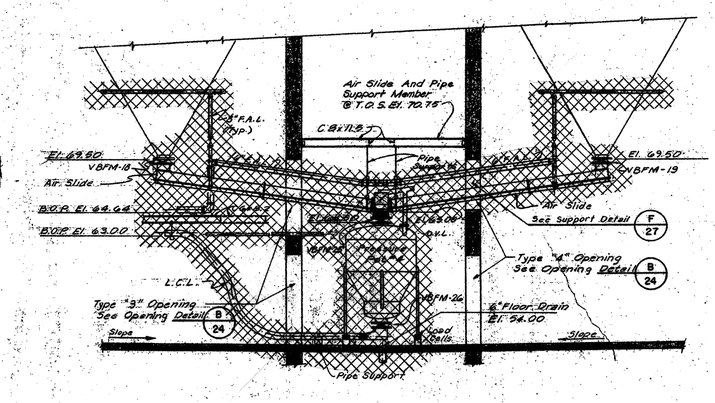

EQUIPMENT SECTION A 27
SCALE: 1/4" = 1'-0"

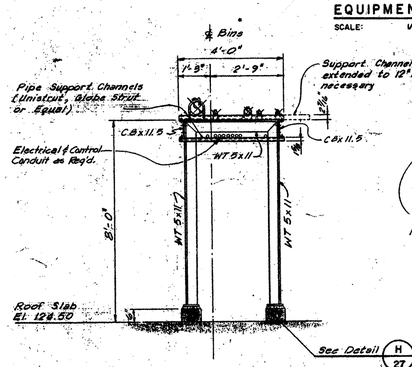

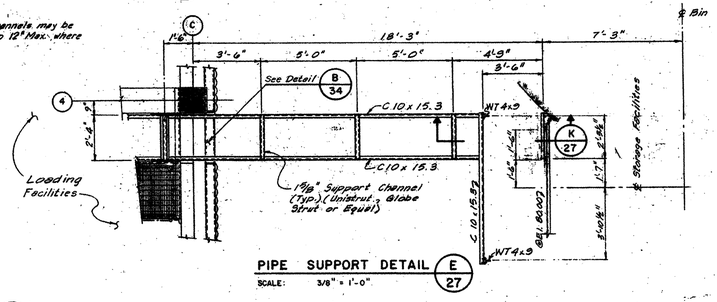

PIPE SUPPORT DETAIL E 27
SCALE: 3/8" = 1'-0"

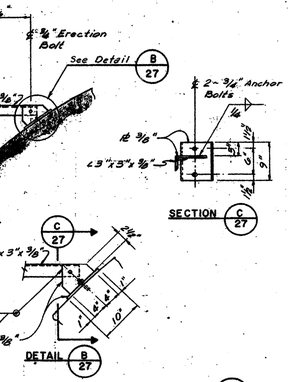

GUIDE RAIL SUPPORT BRACKET DETAIL D 27
SCALE: NONE
(12-Req'd.; 6-As Shown and 6-Opposite Hand)

Note 7:
1. Galvanize Structure Steel After Fabrication, Unless Noted Otherwise.

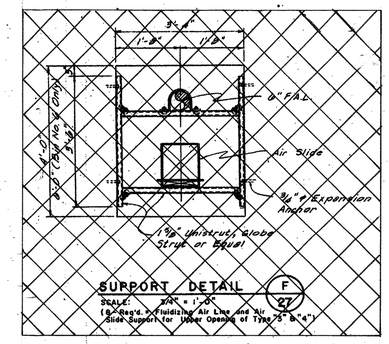

SUPPORT DETAIL F 27
SCALE: 3/4" = 1'-0"
(8-Req'd. ℄ Fluidizing Air Line and Air Slide Support for Upper Opening of Type "B" 8'-4")

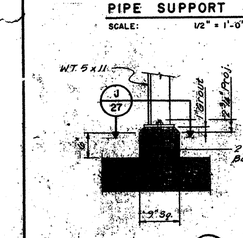

DETAIL J 27
SCALE: 1" = 1'-0"

PIPE SUPPORT SECTION G 27
SCALE: 1/2" = 1'-0"

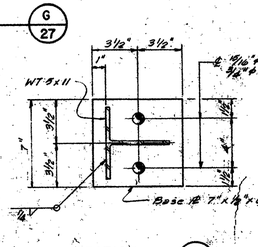

SECTION J 27
SCALE: 3" = 1'-0"

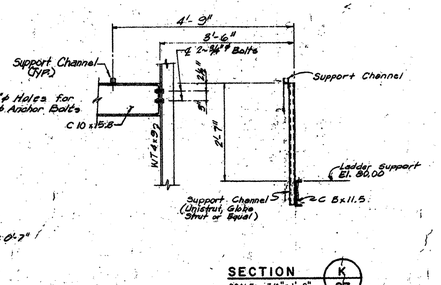

SECTION K 27
SCALE: 3/4" = 1'-0"

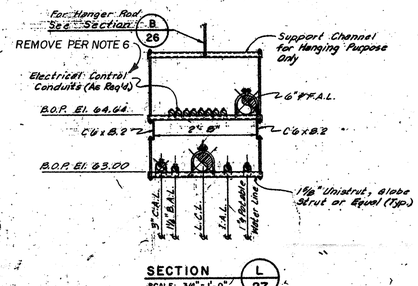

SECTION L 27
SCALE: 3/4" = 1'-0"

NOTES:

1. ALL FACILITIES SHOWN ARE EXISTING UNLESS OTHERWISE NOTED. DATA SHOWN FOR EXISTING FACILITIES IS TAKEN FROM CITY OF HOUSTON RECORD DRAWINGS. CONTRACTOR SHALL FIELD VERIFY ALL DIMENSIONS, ELEVATIONS AND ALL OTHER DATA PRIOR TO START OF WORK AND PROMPTLY BRING DEVIATIONS TO ENGINEER'S ATTENTION.
2. DEMOLITION AND SEQUENCE OF CONSTRUCTION SHALL BE AS PER THE CONTRACT DOCUMENTS.
3. CROSS HATCHING IS USED TO INDICATE SCHEMATICALLY THE ITEMS TO BE REMOVED DURING THIS PHASE. THE CONTRACTOR SHALL LOCATE PIPING CONNECTIONS AND UTILIZE PIPING JOINTS WHERE POSSIBLE TO INTERCEPT THE EXISTING PIPING TO FACILITATE CONNECTION TO NEW PROCESS LINES.
4. REMOVE ALL EXPOSED REBAR AND ANCHOR BOLTS WHICH ARE TO BE REMOVED A MINIMUM OF 1-1/2 INCHES BELOW SURFACE OF REMAINING CONCRETE. FILL ALL VOIDS WITH GROUT CONTAINING A LATEX BONDING AGENT IN ACCORDANCE WITH THE SPECIFICATIONS. GROUTING OPERATIONS SHALL PRODUCE AN EVEN FINISH VERTICALLY PLUMB TO RECEIVE THE NEW FRAMING. THE GROUTING OPERATION SHALL NOT REDUCE THE SIZE OF OPENINGS.
5. CONTRACTOR SHALL PROPERLY AND THOROUGHLY CLEAN ALL CONCRETE, PIPE AND OTHER APPURTENANCES THAT SHALL REMAIN.
6. REMOVE ALL ELECTRICAL AND INSTRUMENT CONDUIT, WIRING AND CABLE, TO THE POINT OF ORIGIN ASSOCIATED WITH ALL EQUIPMENT AND INSTRUMENTATION REMOVED.
7. REMOVE ALL PIPING ASSOCIATED WITH DEMOLISHED EQUIPMENT UNLESS OTHERWISE NOTED.
8. SOME OF THE PIPING AND EQUIPMENT SHOWN TO BE DEMOLISHED HAS BEEN PREVIOUSLY REMOVED OR PARTIALLY DISMANTLED. THE CONTRACTOR SHALL REMOVE ALL REMAINING EQUIPMENT, PIPING AND CONCRETE PEDESTALS.
9. THE CONTRACTOR SHALL REMOVE ALL SURPLUS CONCRETE PEDESTALS TO A MINIMUM OF 1-1/2" BELOW THE SURFACE OF THE EXISTING FLOOR AND ALL SURFACES SHALL BE REPAIRED USING GROUT CONTAINING A LATEX BONDING AGENT IN ACCORDANCE WITH THE SPECIFICATIONS. UNDERGROUND FACILITIES SHOWN TO BE DEMOLISHED MAY BE FILLED, PLUGGED, AND ABANDONED IN PLACE OR REMOVED FORM THE SITE UNLESS SPECIFICALLY NOTED TO BE REMOVED.
10. ALL UNDERGROUND FACILITIES SHOWN TO BE DEMOLISHED MAY BE FILLED, PLUGGED, AND ABANDONED IN PLACE UNLESS SPECIFICALLY NOTED TO BE REMOVED.
11. PRESERVE AND PROTECT REBAR WHERE IT IS SHOWN TO BE REUSED. DO NOT OVERCUT CORNERS OF OPENINGS. DO NOT CUT THE REBAR AS THE CONCRETE IS BEING REMOVED. USE BONDING AGENT AND PREMOLDED SELF-ADHESIVE WATERSTOP WHERE CONDITIONS REQUIRE THEIR USE.
12. ALL PIPE HANGERS MOUNTING BRACKETS ARE TO BE LEFT IN PLACE.
13. WHERE DEMOLTION ACTIVITIES LEAVE ANY OPENINGS IN THE GRATING, WALKWAYS, OR WORK PLATFORMS LARGER THAN 3 INCHES, GRATING SHALL BE INSTALLED TO COVER THE OPENING. THE GRATING MUST MATCH THE EXISTING GRATING AND MUST NOT PRESENT A TRIP HAZARD.
14. THE BELOW GRADE DRAIN PIPES AND SURFACE INLETS SHALL REMAIN IN PLACE AND OPERATIONAL.

ORIGINAL SCALE IN INCHES FOR REDUCED PLANS

SCALE: 3 IN. = 1 FT.
SCALE: 1½ IN. = 1 FT.

PRIVATE UTILITY LINES SHOWN

ENTEX, INC.

SOUTHWESTERN BELL TELEPHONE COMPANY
Valid for one year only.

HOUSTON LIGHTING & POWER CO.
Approval only for crossing underground ductlines unless noted. Valid for one year only.

REV NO	DESCRIPTION	APP'D	DATE

SEAL
AS-BUILT
Darrell Allen
1/25/02

SEAL

RATNALA & BAHL, INC.
Engineers • Architects • Surveyors
11767 KATY FREEWAY, SUITE 510
HOUSTON, TEXAS 77079

CH2M HILL
7600 West Tidwell Road, Suite 400
Houston Tx 77040
713.462.0161

Binkley & Barfield, Inc.
Consulting Engineers
1710 Seamist Drive Houston, Texas 77008

ALMEDA SIMS
BIOSOLIDS
DRYER REHABILITATION

CIP NO 0298-05-3
FILE NO: 4289-4

DEMOLITION PLAN
STORAGE FACILITIES
MISC. PIPING AND STRUCT. DETAILS

CITY OF HOUSTON
DEPARTMENT OF PUBLIC WORKS AND ENGINEERING
ENGINEERING, CONSTRUCTION AND REAL ESTATE GROUP

SECTION APPROVALS

WATER ENGINEERING
TRAFFIC AND SIGNAL ENGINEERING
WASTEWATER ENGINEERING
STREET & BRIDGE ENGINEERING
STORMWATER ENGINEERING
CONSTRUCTION 3/2/99
3/2/99
OTHER DEPARTMENTS
PLANNING AND DEVELOPMENT
SPONSOR DEPARTMENT
CITY ENGINEER 3-2-99 DATE
DIRECTOR OF PUBLIC WORKS AND ENGINEERING 3/5/99 DATE

JOB NO 3304-DS-2

CITY OF HOUSTON
DEPARTMENT OF PUBLIC WORKS

ALMEDA SIMS
SLUDGE DISPOSAL PLANT
PNEUMATIC CONVEYING, STORAGE AND LOADING FACILITIES

STORAGE FACILITIES
MISCELLANEOUS PIPING
AND STRUCTURAL DETAILS

RECOMMENDED FOR APPROVAL:
BINKLEY & HOLMES, INC. CONSULTING ENGINEERS

APPROVED:
WASTEWATER
PAVING
WATER
CONSTRUCTION
STORM SEWER
ASST. DIRECTOR
DIRECTOR

DESIGNED BY: W.L.W. & W.L.B. SCALE: AS SHOWN
DRAWN BY: W.L.W. DATE: APRIL 1980
CHECKED BY: R.R.L. DRAWING NO.
SHEET: SHEET NO. 27 OF 51

SUBMITTED:
SCALE: AS NOTED
DATE:
SURVEY BY: N/A
F B NO:

DESIGNED BY: WLW
DRAWN BY: WLW
DWG. NO. : D-36
SHT NO 112 of 159 SHTS
CITY DWG NO:
35001

CADD DWG FILE NO - F:/64305.NONE
FILE DATE - OPERATOR - NONE

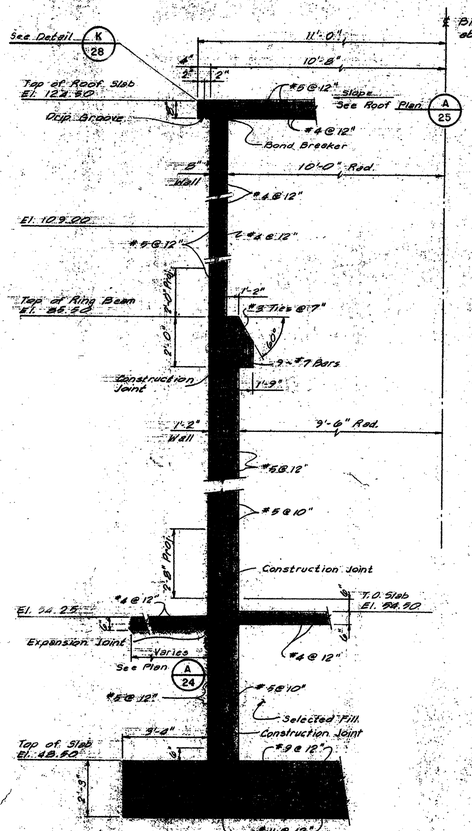

PRIVATE UTILITY LINES SHOWN

ENTEX, INC.

SOUTHWESTERN BELL TELEPHONE COMPANY
Valid for one year only.

HOUSTON LIGHTING & POWER CO.
Approval only for crossing underground ductlines unless noted. Valid for one year only.

REV NO	DESCRIPTION	APP'D	DATE

SEAL

AS-BUILT
Darrell Ratnala
4/25/02

SEAL

RATNALA & BAHL, INC.
Engineers · Architects · Surveyors
11767 KATY FREEWAY, SUITE 510
HOUSTON, TEXAS 77079

CH2M HILL
7600 West Tidwell Road, Suite 400
Houston Tx 77040
713.462.0161

Binkley & Barfield, Inc.
Consulting Engineers
1710 Seamist Drive Houston, Texas 77008

ALMEDA SIMS
BIOSOLIDS
DRYER REHABILITATION

CIP NO 0298-05-3
FILE NO: 4289-4

DEMOLITION PLAN
STORAGE FACILITIES
MISC. STRUCT. SECTIONS & DETAILS

CITY OF HOUSTON
DEPARTMENT OF PUBLIC WORKS AND ENGINEERING
ENGINEERING, CONSTRUCTION AND REAL ESTATE GROUP

SECTION APPROVALS

WATER ENGINEERING
TRAFFIC AND SIGNAL ENGINEERING
WASTEWATER ENGINEERING
STREET & BRIDGE ENGINEERING
STORMWATER ENGINEERING
CONSTRUCTION 3/2/99

OTHER DEPARTMENTS

PLANNING AND DEVELOPMENT
SPONSOR DEPARTMENT

CITY ENGINEER 3-2-99 DATE
DIRECTOR OF PUBLIC WORKS AND ENGINEERING 3/1/99 DATE

JOB NO. 3304-05-2

CITY OF HOUSTON
DEPARTMENT OF PUBLIC WORKS

ALMEDA SIMS
SLUDGE DISPOSAL PLANT
PNEUMATIC CONVEYING, STORAGE AND LOADING FACILITIES

STORAGE FACILITIES
MISCELLANEOUS STRUCTURAL SECTIONS AND DETAILS

RECOMMENDED FOR APPROVAL:
Kenneth Bahl
BINKLEY & HOLMES, INC. CONSULTING ENGINEERS

APPROVED:
WASTEWATER
PAVING
WATER
CONSTRUCTION
STORM SEWER
ASST. DIRECTOR
DIRECTOR

DESIGNED BY: J.L.B. SCALE: AS SHOWN
DRAWN BY: B.L.L. DATE: APRIL 1980
CHECKED BY: K.R.L. DRAWING NO.
SHEET SHEET NO. 28 OF 51

SUBMITTED:
SCALE: AS NOTED
DATE:
SURVEY BY: N/A
F B NO:

DESIGNED BY: WLW
DRAWN BY: WLW
DWG. NO. : D-37
SHT NO 113 of 159 SHTS
CITY DWG NO: 3500!

NOTES:

1. ALL FACILITIES SHOWN ARE EXISTING UNLESS OTHERWISE NOTED. DATA SHOWN FOR EXISTING FACILITIES IS TAKEN FROM CITY OF HOUSTON RECORD DRAWINGS. CONTRACTOR SHALL FIELD VERIFY ALL DIMENSIONS, ELEVATIONS AND ALL OTHER DATA PRIOR TO START OF WORK AND PROMPTLY BRING DEVIATIONS TO ENGINEER'S ATTENTION.
2. DEMOLITION AND SEQUENCE OF CONSTRUCTION SHALL BE AS PER THE CONTRACT DOCUMENTS.
3. CROSS HATCHING IS USED TO INDICATE SCHEMATICALLY THE ITEMS TO BE REMOVED DURING THIS PHASE. THE CONTRACTOR SHALL LOCATE PIPING CONNECTIONS AND UTILIZE PIPING JOINTS WHERE POSSIBLE TO INTERCEPT THE EXISTING PIPING TO FACILITATE CONNECTION TO NEW PROCESS LINES.
4. REMOVE ALL EXPOSED REBAR AND ANCHOR BOLTS WHICH ARE TO BE REMOVED A MINIMUM OF 1-1/2 INCHES BELOW SURFACE OF REMAINING CONCRETE. FILL ALL VOIDS WITH GROUT CONTAINING A LATEX BONDING AGENT IN ACCORDANCE WITH THE SPECIFICATIONS. GROUTING OPERATIONS SHALL PRODUCE AN EVEN FINISH VERTICALLY PLUMB TO RECEIVE THE NEW FRAMING. THE GROUTING OPERATION SHALL NOT REDUCE THE SIZE OF OPENINGS.
5. CONTRACTOR SHALL PROPERLY AND THOROUGHLY CLEAN ALL CONCRETE, PIPE AND OTHER APPURTENANCES THAT SHALL REMAIN.
6. REMOVE ALL ELECTRICAL AND INSTRUMENT CONDUIT, WIRING AND CABLE, TO THE POINT OF ORIGIN ASSOCIATED WITH ALL EQUIPMENT AND INSTRUMENTATION REMOVED.
7. REMOVE ALL PIPING ASSOCIATED WITH DEMOLISHED EQUIPMENT UNLESS OTHERWISE NOTED.
8. SOME OF THE PIPING AND EQUIPMENT SHOWN TO BE DEMOLISHED HAS BEEN PREVIOUSLY REMOVED OR PARTIALLY DISMANTLED. THE CONTRACTOR SHALL REMOVE ALL REMAINING EQUIPMENT, PIPING AND CONCRETE PEDESTALS.
9. THE CONTRACTOR SHALL REMOVE ALL SURPLUS CONCRETE PEDESTALS TO A MINIMUM OF 1-1/2" BELOW THE SURFACE OF THE EXISTING FLOOR AND ALL SURFACES SHALL BE REPAIRED USING GROUT CONTAINING A LATEX BONDING AGENT IN ACCORDANCE WITH THE SPECIFICATIONS. UNDERGROUND FACILITIES SHOWN TO BE DEMOLISHED MAY BE FILLED, PLUGGED, AND ABANDONED IN PLACE OR REMOVED FORM THE SITE UNLESS SPECIFICALLY NOTED TO BE REMOVED.
10. ALL UNDERGROUND FACILITIES SHOWN TO BE DEMOLISHED MAY BE FILLED, PLUGGED, AND ABANDONED IN PLACE UNLESS SPECIFICALLY NOTED TO BE REMOVED.
11. PRESERVE AND PROTECT REBAR WHERE IT IS SHOWN TO BE REUSED. DO NOT OVERCUT CORNERS OF OPENINGS. DO NOT CUT THE REBAR AS THE CONCRETE IS BEING REMOVED. USE BONDING AGENT AND PREMOLDED SELF-ADHESIVE WATERSTOP WHERE CONDITIONS REQUIRE THEIR USE.
12. ALL PIPE HANGERS MOUNTING BRACKETS ARE TO BE LEFT IN PLACE.
13. WHERE DEMOLTION ACTIVITIES LEAVE ANY OPENINGS IN THE GRATING, WALKWAYS, OR WORK PLATFORMS LARGER THAN 3 INCHES, GRATING SHALL BE INSTALLED TO COVER THE OPENING. THE GRATING MUST MATCH THE EXISTING GRATING AND MUST NOT PRESENT A TRIP HAZARD.
14. THE BELOW GRADE DRAIN PIPES AND SURFACE INLETS SHALL REMAIN IN PLACE AND OPERATIONAL.
15. REMOVE EXISTING VALVE AND MODIFY BOTTOM OF SILO NO. 1 PER DETAILS ON DWG M-22.

SCALE: 3 IN. = 1 FT.
SCALE: 1½ IN. = 1 FT.
ORIGINAL SCALE IN INCHES FOR REDUCED PLANS

CADD DWG FILE NO :F:/64305/NONE
FILE DATE--OPERATOR: NONE

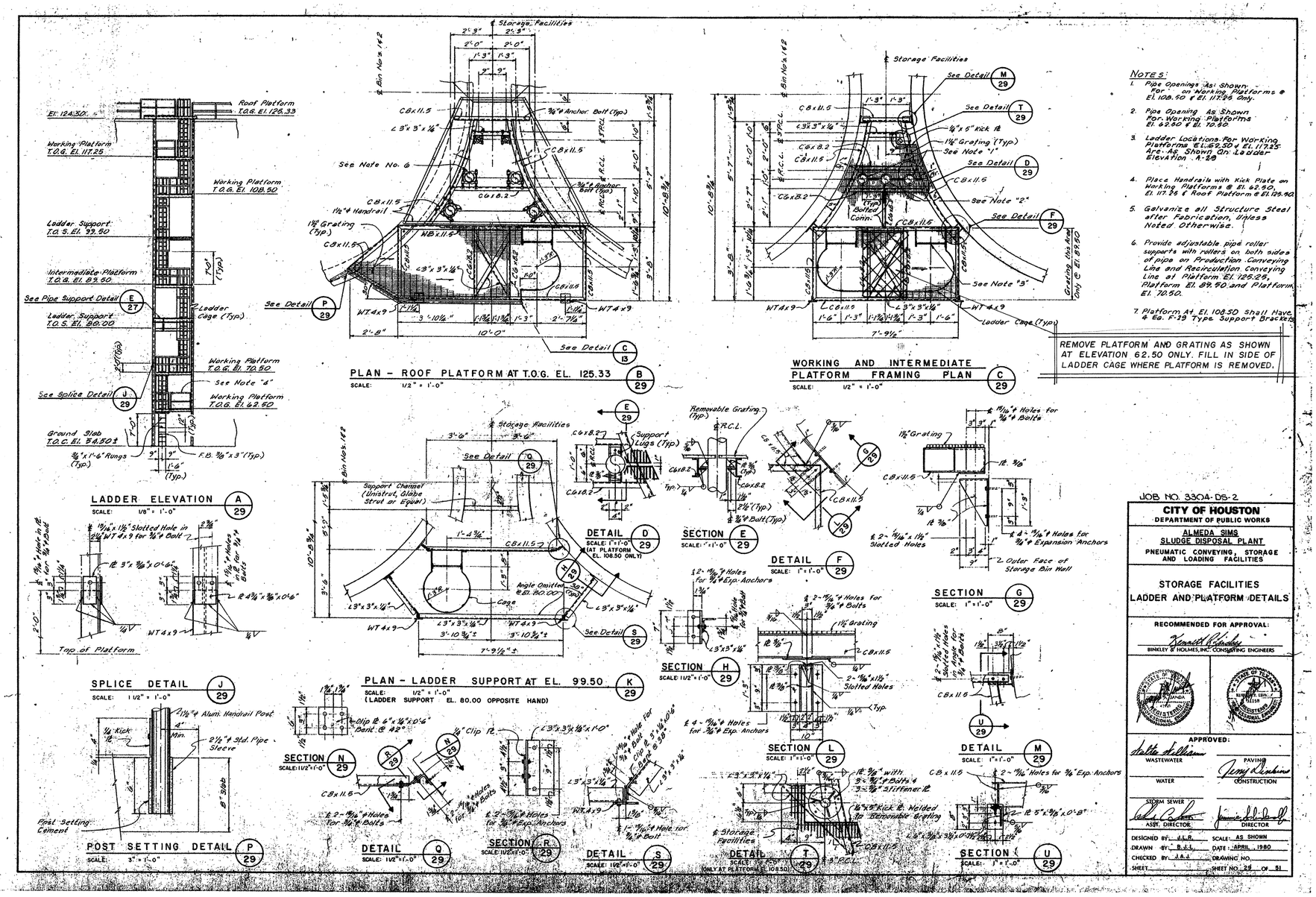

NOTES:

1. Pipe Openings As Shown For Working Platforms @ El. 108.50 & El. 117.96 Only.
2. Pipe Opening As Shown For Working Platforms El. 62.50 & El. 70.50.
3. Ladder Locations For Working Platforms El. 62.50 & El. 117.25 Are As Shown On Ladder Elevation A-29
4. Place Handrails with Kick Plate on Working Platforms @ El. 62.50, El. 117.25 & Roof Platform @ El. 125.50.
5. Galvanize all Structure Steel after Fabrication, Unless Noted Otherwise.
6. Provide adjustable pipe roller supports with rollers on both sides of pipe on Production Conveying Line and Recirculation Conveying Line at Platform El. 125.25, Platform El. 89.50 and Platform El. 70.50.
7. Platform At El. 108.50 Shall Have 4 Ea. F-29 Type Support Brackets

REMOVE PLATFORM AND GRATING AS SHOWN AT ELEVATION 62.50 ONLY. FILL IN SIDE OF LADDER CAGE WHERE PLATFORM IS REMOVED.

NOTES:

1. ALL FACILITIES SHOWN ARE EXISTING UNLESS OTHERWISE NOTED. DATA SHOWN FOR EXISTING FACILITIES IS TAKEN FROM CITY OF HOUSTON RECORD DRAWINGS. CONTRACTOR SHALL FIELD VERIFY ALL DIMENSIONS, ELEVATIONS AND ALL OTHER DATA PRIOR TO START OF WORK AND PROMPTLY BRING DEVIATIONS TO ENGINEER'S ATTENTION.
2. DEMOLITION AND SEQUENCE OF CONSTRUCTION SHALL BE AS PER THE CONTRACT DOCUMENTS.
3. CROSS HATCHING IS USED TO INDICATE SCHEMATICALLY THE ITEMS TO BE REMOVED DURING THIS PHASE. THE CONTRACTOR SHALL LOCATE PIPING CONNECTIONS AND UTILIZE PIPING JOINTS WHERE POSSIBLE TO INTERCEPT THE EXISTING PIPING TO FACILITATE CONNECTION TO NEW PROCESS LINES.
4. REMOVE ALL EXPOSED REBAR AND ANCHOR BOLTS WHICH ARE TO BE REMOVED A MINIMUM OF 1-1/2 INCHES BELOW SURFACE OF REMAINING CONCRETE. FILL ALL VOIDS WITH GROUT CONTAINING A LATEX BONDING AGENT IN ACCORDANCE WITH THE SPECIFICATIONS. GROUTING OPERATIONS SHALL PRODUCE AN EVEN FINISH VERTICALLY PLUMB TO RECEIVE THE NEW FRAMING. THE GROUTING OPERATION SHALL NOT REDUCE THE SIZE OF OPENINGS.
5. CONTRACTOR SHALL PROPERLY AND THOROUGHLY CLEAN ALL CONCRETE, PIPE AND OTHER APPURTENANCES THAT SHALL REMAIN.
6. REMOVE ALL ELECTRICAL AND INSTRUMENT CONDUIT, WIRING AND CABLE, TO THE POINT OF ORIGIN ASSOCIATED WITH ALL EQUIPMENT AND INSTRUMENTATION REMOVED.
7. REMOVE ALL PIPING ASSOCIATED WITH DEMOLISHED EQUIPMENT UNLESS OTHERWISE NOTED.
8. SOME OF THE PIPING AND EQUIPMENT SHOWN TO BE DEMOLISHED HAS BEEN PREVIOUSLY REMOVED OR PARTIALLY DISMANTLED. THE CONTRACTOR SHALL REMOVE ALL REMAINING EQUIPMENT , PIPING AND CONCRETE PEDESTALS.
9. THE CONTRACTOR SHALL REMOVE ALL SURPLUS CONCRETE PEDESTALS TO A MINIMUM OF 1-1/2" BELOW THE SURFACE OF THE EXISTING FLOOR AND ALL SURFACES SHALL BE REPAIRED USING GROUT CONTAINING A LATEX BONDING AGENT IN ACCORDANCE WITH THE SPECIFICATIONS. UNDERGROUND FACILITIES SHOWN TO BE DEMOLISHED MAY BE FILLED, PLUGGED, AND ABANDONED IN PLACE OR REMOVED FORM THE SITE UNLESS SPECIFICALLY NOTED TO BE REMOVED.
10. ALL UNDERGROUND FACILITIES SHOWN TO BE DEMOLISHED MAY BE FILLED, PLUGGED, AND ABANDONED IN PLACE UNLESS SPECIFICALLY NOTED TO BE REMOVED.
11. PRESERVE AND PROTECT REBAR WHERE IT IS SHOWN TO BE REUSED. DO NOT OVERCUT CORNERS OF OPENINGS. DO NOT CUT THE REBAR AS THE CONCRETE IS BEING REMOVED. USE BONDING AGENT AND PREMOLDED SELF-ADHESIVE WATERSTOP WHERE CONDITIONS REQUIRE THEIR USE.
12. ALL PIPE HANGERS MOUNTING BRACKETS ARE TO BE LEFT IN PLACE.
13. WHERE DEMOLTION ACTIVITIES LEAVE ANY OPENINGS IN THE GRATING, WALKWAYS, OR WORK PLATFORMS LARGER THAN 3 INCHES, GRATING SHALL BE INSTALLED TO COVER THE OPENING. THE GRATING MUST MATCH THE EXISTING GRATING AND MUST NOT PRESENT A TRIP HAZARD.
14. THE BELOW GRADE DRAIN PIPES AND SURFACE INLETS SHALL REMAIN IN PLACE AND OPERATIONAL.

ORIGINAL SCALE IN INCHES FOR REDUCED PLANS

SCALE 3 IN. = 1 FT.
SCALE 1½ IN. = 1 FT.
SCALE ½ IN. = 1 FT.

PRIVATE UTILITY LINES SHOWN

ENTEX, INC.

SOUTHWESTERN BELL TELEPHONE COMPANY
Valid for one year only.

HOUSTON LIGHTING & POWER CO.
Approval only for crossing underground ductlines unless noted. Valid for one year only.

REV NO	DESCRIPTION	APP'D	DATE

SEAL

AS-BUILT
1/28/02

SEAL

RATNALA & BAHL, INC.
Engineers • Architects • Surveyors
11767 KATY FREEWAY, SUITE 510
HOUSTON, TEXAS 77079

CH2M HILL
7600 West Tidwell Road, Suite 400
Houston Tx 77040
713.462.0161

Binkley & Barfield, Inc.
Consulting Engineers
1710 Seamist Drive Houston, Texas 77008

ALMEDA SIMS
BIOSOLIDS
DRYER REHABILITATION

CIP NO 0298-05-3
FILE NO: 4289-4

DEMOLITION PLAN
STORAGE FACILITIES
LADDER AND PLATFORM DETAILS

CITY OF HOUSTON
DEPARTMENT OF PUBLIC WORKS AND ENGINEERING
ENGINEERING, CONSTRUCTION AND REAL ESTATE GROUP

SECTION APPROVALS

WATER ENGINEERING
TRAFFIC AND SIGNAL ENGINEERING
WASTEWATER ENGINEERING — 2-25-99
STREET & BRIDGE ENGINEERING
STORMWATER ENGINEERING
CONSTRUCTION — 3/2/99
2/25/99

OTHER DEPARTMENTS

PLANNING AND DEVELOPMENT
SPONSOR DEPARTMENT

CITY ENGINEER — 3-2-99 DATE
DIRECTOR OF PUBLIC WORKS AND ENGINEERING — 3/8/99 DATE

SUBMITTED:
SCALE: AS NOTED
DATE:
SURVEY BY: N/A
F B NO:

DESIGNED BY: WLW
DRAWN BY: WLW
DWG. NO. : D-38
SHT NO 114 of 159 SHTS
CITY DWG NO: 35001

JOB NO. 3304-05-2

CITY OF HOUSTON
DEPARTMENT OF PUBLIC WORKS

ALMEDA SIMS SLUDGE DISPOSAL PLANT
PNEUMATIC CONVEYING, STORAGE AND LOADING FACILITIES

STORAGE FACILITIES
LADDER AND PLATFORM DETAILS

RECOMMENDED FOR APPROVAL:
Kenneth Binkley
BINKLEY & HOLMES, INC. CONSULTING ENGINEERS

APPROVED:
WASTEWATER — PAVING
WATER — CONSTRUCTION
STORM SEWER — ASST. DIRECTOR — DIRECTOR

DESIGNED BY J.L.B. SCALE: AS SHOWN
DRAWN BY B.J.L. DATE: APRIL, 1980
CHECKED BY J.B.J. DRAWING NO.
SHEET SHEET NO. 28 OF 51

64305A/M01.DWG
01/22/99-DVB/FG
FILE DATE--OPERATOR:

MECHANICAL LEGEND AND NOTES

GENERAL PIPING NOTES

1. LAY PIPE TO UNIFORM GRADE BETWEEN INDICATED ELEVATION POINTS.
2. SIZE OF FITTINGS SHOWN ON PLANS SHALL CORRESPOND TO ADJACENT STRAIGHT RUN OF PIPE, UNLESS OTHERWISE INDICATED. TYPE OF JOINT AND FITTING MATERIAL SHALL BE THE SAME AS SHOWN FOR ADJACENT STRAIGHT RUN OF PIPE.
3. LOCATION AND NUMBER OF PIPE HANGERS AND PIPE SUPPORTS SHOWN IS ONLY APPROXIMATE. FINAL SUPPORT REQUIREMENTS SHALL BE DETERMINED IN THE FIELD AND APPROVED BY THE ENGINEER PRIOR TO INSTALLATION. MAXIMUM SPACING SHALL BE AS SPECIFIED.
4. ALL JOINTS SHALL BE WATERTIGHT. STANDARD WALL PIPE DETAIL SHALL BE USED WHEREVER PIPING PASSES FROM A STRUCTURE TO BACKFILL.
5. ALL FLEXIBLE CONNECTORS OR FLANGED COUPLING ADAPTERS SHALL BE PROVIDED WITH THRUST TIES, OR ANCHORS, UNLESS OTHERWISE NOTED. THRUST PROTECTION SHALL BE ADEQUATE FOR PRESSURES SPECIFIED.
6. SYMBOLS, LEGENDS, AND PIPE USE IDENTIFICATIONS SHOWN SHALL BE FOLLOWED THROUGHOUT THE PLANS, WHEREVER APPLICABLE. ALL OF THE VARIOUS PIPING APPLICATIONS ARE NOT NECESSARILY USED IN THE PROJECT.
7. ALL BURIED PIPING SPECIFIED TO BE PRESSURE TESTED, EXCEPT FLANGED, WELDED, OR SCREWED PIPING, SHALL BE PROVIDED WITH MECHANICAL RESTRAINT JOINTS, UNLESS OTHERWISE NOTED.
8. NUMBER AND LOCATION OF UNIONS SHOWN ON PLANS IS ONLY APPROXIMATE. PROVIDE ALL UNIONS NECESSARY TO FACILITATE CONVENIENT REMOVAL OF VALVES AND MECHANICAL EQUIPMENT.

PIPE AND FITTING SYMBOLS

DOUBLE LINE	SINGLE LINE	
		EXISTING PIPE
		NEW PIPE
		EXISTING PIPE TO BE ABANDONED
		EXISTING PIPE TO BE REMOVED
		WELDED JOINT
		FLANGED JOINT
		FLANGED COUPLING ADAPTER
		FLEXIBLE COUPLING
		FLEXIBLE COUPLING WITH THRUST TIES
		STEEL BELLOWS EXP JOINT
		ELASTOMER BELLOWS EXP JOINT
		ELBOW UP
		ELBOW DOWN
		TEE UP
		TEE DOWN
		LATERAL UP

DOUBLE LINE	SINGLE LINE	
		LATERAL DOWN
		CONCENTRIC REDUCER
		ECCENTRIC REDUCER
		UNION
		CAP
		ANCHOR
		ELBOW, 90 DEGREE
		CROSS
		TEE
		ELBOW, 45 DEGREE
		LATERAL

NOTES:

1. ONLY FLANGED END CONNECTIONS ARE SHOWN HERE FOR DOUBLE LINE FITTINGS. FITTINGS WITH OTHER END PATTERNS ARE SHOWN SIMILARLY ON THE CONSTRUCTION DRAWINGS. ALSO SEE PIPING SPECIFICATIONS.
2. SYMBOLS SHOWN HERE FOR SINGLE LINE FITTINGS ARE GENERIC ONLY. REFER TO PIPING SPECIFICATIONS FOR SPECIFIC END CONNECTIONS FOR SINGLE LINE PIPE AND FITTINGS.
3. EXISTING PIPING AND EQUIPMENT ARE SHOWN LIGHT-LINED AND/OR SCREENED AND ARE NOTED AS EXISTING NEW PIPING AND EQUIPMENT IS SHOWN HEAVY-LINED

MISCELLANEOUS PIPING SYMBOLS

GAUGE WITH COCK

PS 26-1-2 — TYPICAL INSTRUMENT SYMBOL (SEE I&C LEGEND)

PLUMBING FIXTURE IDENTIFICATION

SSK	SERVICE SINK
SSH	SAFETY SHOWER

EXAMPLE: SSH-1

FIXTURE LEGEND

NO. IN SPECIFICATIONS

GENERAL NOTE

THIS IS A STANDARD LEGEND, THEREFORE, NOT ALL OF THE INFORMATION SHOWN MAY BE USED ON THIS PROJECT.

PIPING DESIGNATION

EXAMPLE: 6" RCY

6" RCY — PIPE USE IDENTIFICATION LEGEND (SEE SHT !-1 FOR FLOW STREAM IDENTIFICAITON LEGEND)

6" — NOMINAL PIPE DIAMETER

HEAT TRACING

HTIP — HEAT TRACED AND INSULATED PIPE

(X) — END POINTS OF HEAT TRACED AND INSULATED PIPE

VALVE DESIGNATIONS

MANUAL VALVES AND CHECK VALVES

SIZE OF VALVE — 1"

VALVE DESIGNATION — V300

VALVE TYPE, SEE SPECIFICATIONS

BUILDING SERVICES SYMBOLS

PS — PRESSURE SWITCH

HOSE RACK (TYPE AS INDICATED)

EYEWASH WITH SAFETY SHOWER

FE-X — FIRE EXTINGUISHER, X = NO. IN SPECS

XCO — X = F - FLOOR CLEANOUT; D - DECK CLEANOUT; W - WALL CLEANOUT

FD-X — FLOOR DRAIN, X - NO. IN SPECS

HD-X — HUB DRAIN, X - NO. IN SPECS

HEATING, VENTILATING, AND AIR CONDITIONING SYMBOLS

WALL REGISTER OR GRILLE (SUPPLY) BG, BR, TG, TR

CEILING DIFFUSER OR REGISTER (SUPPLY) CD, CR

CEILING REGISTER OR GRILLE (RETURN AND EXHAUST) CG, CR

WALL REGISTER OR GRILLE (RETURN AND EXHAUST) BG, BR, TG, TR

TURNING VANES

EXTRACTOR VANES

FD — FIRE DAMPER

SPLITTER DAMPER

MANUAL BUTTERFLY DAMPER

M — MOTORIZED DAMPER OR LOUVER

FLEXIBLE CONNECTION

FLEXIBLE DUCTWORK

SUPPLY DUCT (SECTION)

INTAKE, RETURN, OR EXHAUST DUCT (SECTION)

T — THERMOSTAT

(200) — 200 SCFM

VALVE SYMBOLS

GATE

BUTTERFLY

GLOBE

BALL

SWING CHECK

DOUBLE DISC CHECK

BALL CHECK

HOSE VALVE

MUD

PRESSURE RELIEF

AIR AND/OR VACUUM RELEASE

PINCH

REGULATED SIDE PRESSURE CONTROL

S — SAMPLE

SEAT PORT ECCENTRIC PLUG

FLOW STREAM IDENTIFICATION

ALP	AIR, LOW PRESSURE PROCESS
BYP	BYPASS
CNP	CONCENTRATED POLYMER
D	SANITARY DRAIN
DEC	DECANT
DLP	DILUTE POLYMER
DPS	DILUTE POLYMER SOLUTION
DR	PROCESS DRAIN
FE	FINAL EFFLUENT
FO	FUEL OIL
ML	MIXED LIQUOR
NPW	(BACKFLOW PREVENTED)
OF	OVERFLOW
PD	PUMP DISCHARGE
PRS	PROCESS SLUDGE
RAS	RETURN ACTIVATED SLUDGE
RS	RAW SEWAGE
SBS	SODIUM BISULFITE SOLUTION
SE	SECONDARY EFFLUENT
V	VENT
WAS	WASTE ACTIVATED SLUDGE
W-1	POTABLE CITY WATER
W-3	NONPOTABLE WATER

REV NO	DESCRIPTION	APP'D	DATE

SEAL — STATE OF TEXAS, DAVID J. ROSS, 68267, REGISTERED PROFESSIONAL ENGINEER

SEAL — AS-BUILT, David J. Ross 1/25/02

CH2M HILL
7600 West Tidwell Road, Suite 400
Houston Tx 77040
713.462.0161

Binkley & Barfield, Inc.
Consulting Engineers
1710 Seamist Drive Houston, Texas 77008

ALMEDA SIMS
BIOSOLIDS
DRYER REHABILITATION

GFS NO: 0298-05-3
FILE NO: 4289-4

MECHANICAL LEGEND

CITY OF HOUSTON
DEPARTMENT OF PUBLIC WORKS AND ENGINEERING
ENGINEERING, CONSTRUCTION AND REAL ESTATE GROUP

SECTION APPROVALS

WATER ENGINEERING — TRAFFIC AND SIGNAL ENGINEERING

WASTEWATER ENGINEERING — 2-25-99 — STREET & BRIDGE ENGINEERING

STORMWATER ENGINEERING — CONSTRUCTION — 3/2/99

OTHER DEPARTMENTS

PLANNING AND DEVELOPMENT — SPONSOR DEPARTMENT

CITY ENGINEER — 3-2-99 DATE

DIRECTOR OF PUBLIC WORKS AND ENGINEERING — 3/5/99 DATE

SUBMITTED:
SCALE: NONE
NONE
DATE:
SURVEY BY:
F B NO:

DESIGNED BY: DJR
DRAWN BY: AAA
DWG. NO. : M-01
SHT NO 115 of 159 SHTS
CITY DWG NO: 35001

CADD DWG FILE NO. F:/64305/
ORIGINAL SCALE IN INCHES FOR REDUCED PLANS
0 1 2 3

64305s/m02.dwg
FILE DATE—OPERATOR: 09-06-01 JRR

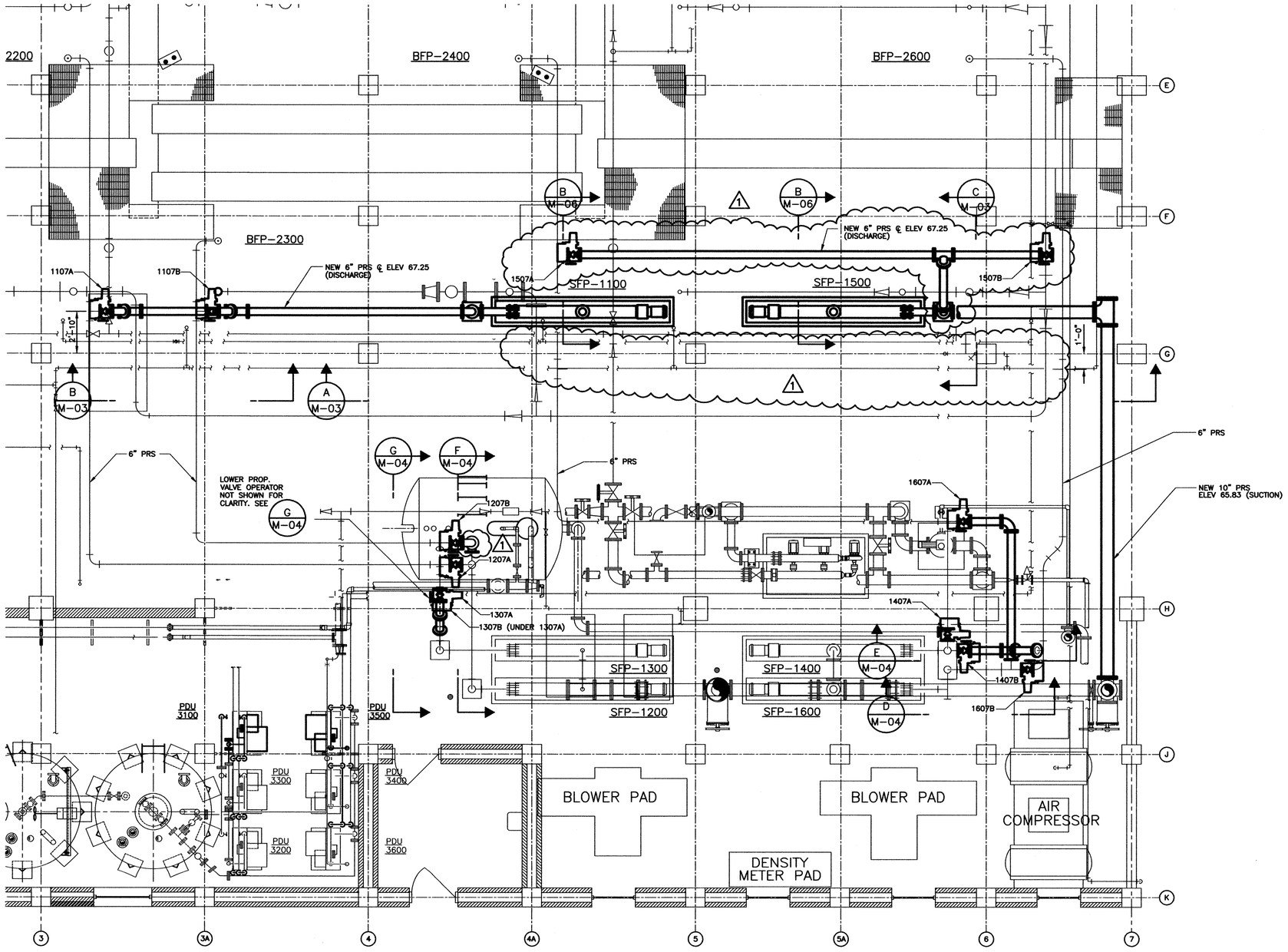

LEGEND

- PROPOSED PIPING
- PROPOSED PIPING
- EXISTING OR CURRENT CONTRACT PIPING
- EXISTING PIPING AND EQUIPMENT

NOTES:

VALVES FOR THE POLYMER PIPING ARE SHOWN ON SHEET M–07

REV NO	DESCRIPTION	APP'D	DATE
1	AS BUILT DRAWING	DJR	12/01

SEAL

STATE OF TEXAS
DAVID J. ROSS
68267
REGISTERED PROFESSIONAL ENGINEER
1/25/02

SEAL

AS BUILT
1/25/02

CH2M HILL
7600 West Tidwell Road, Suite 400
Houston Tx 77040
713.462.0161

Binkley & Barfield, Inc.
Consulting Engineers
1710 Seamist Drive Houston, Texas 77008

ALMEDA SIMS
BIOSOLIDS
DRYER REHABILITATION

GFS NO: 0298–05–3
FILE NO: 4289–4

PIPING PLAN
FOR
PUMPING IMPROVEMENTS

CITY OF HOUSTON
DEPARTMENT OF PUBLIC WORKS AND ENGINEERING
ENGINEERING, CONSTRUCTION AND REAL ESTATE GROUP

SECTION APPROVALS

WATER ENGINEERING	TRAFFIC AND SIGNAL ENGINEERING
WASTEWATER ENGINEERING	STREET & BRIDGE ENGINEERING
STORMWATER ENGINEERING	CONSTRUCTION

OTHER DEPARTMENTS

PLANNING AND DEVELOPMENT	SPONSOR DEPARTMENT

CITY ENGINEER _____ DATE _____

DIRECTOR OF PUBLIC WORKS AND ENGINEERING _____ DATE _____

SUBMITTED:
SCALE: 1/4"=1'–0"
NONE
DATE:
SURVEY BY:
F B NO:

DESIGNED BY: DJR
DRAWN BY: AAA
DWG. NO. : M–02
SHT NO 116 of 159 SHTS
CITY DWG NO: 35001

CADD DWG FILE NO :F:/64305/
ORIGINAL SCALE IN INCHES FOR REDUCED PLANS
0 1 2 3
ORIGINAL SCALE IN INCHES FOR REDUCED PLANS

FILE DATE--OPERATOR: 01/22/99--RPD/K
64305o/m02.dwg

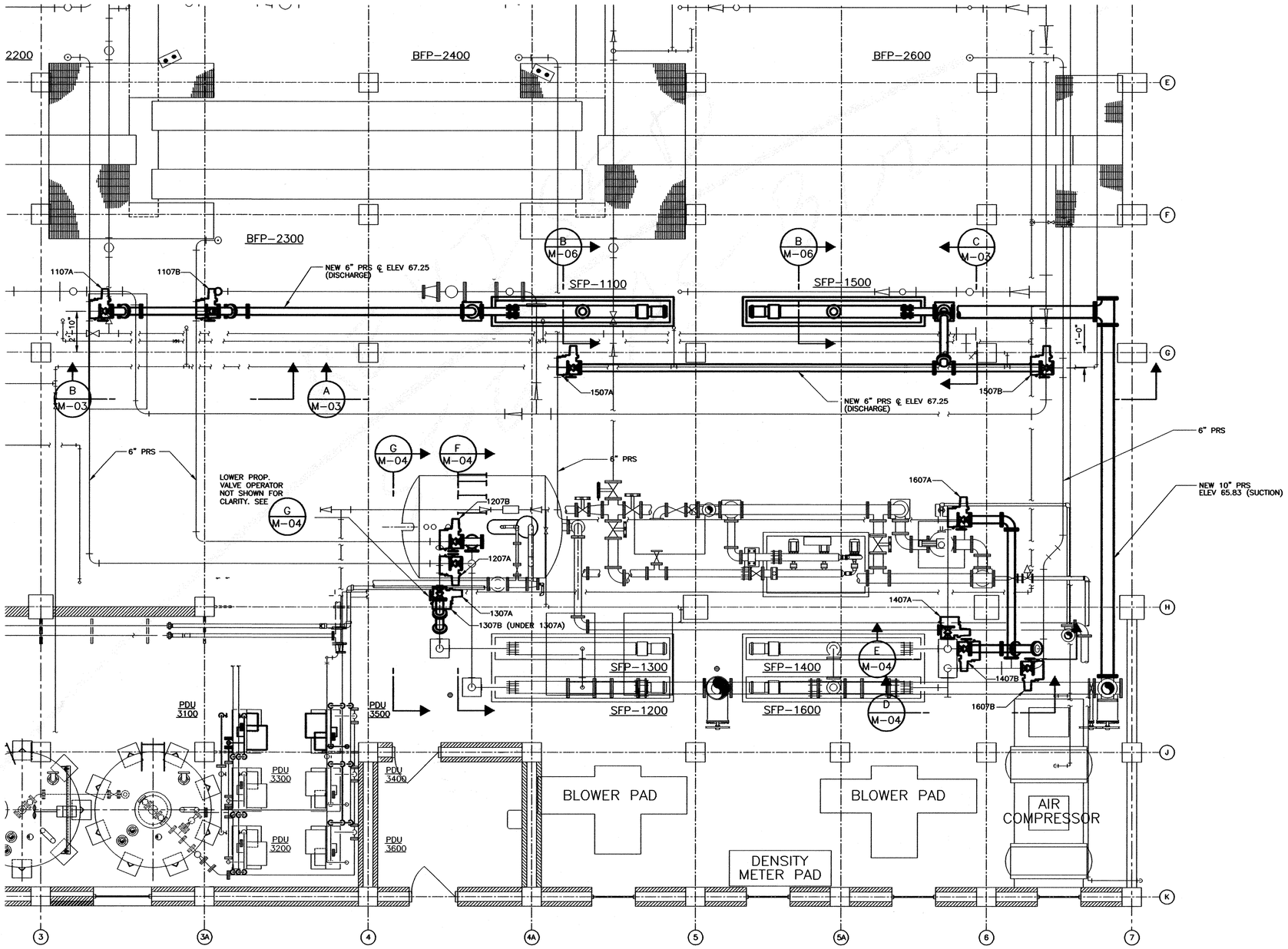

LEGEND

- PROPOSED PIPING
- PROPOSED PIPING
- EXISTING OR CURRENT CONTRACT PIPING
- EXISTING PIPING AND EQUIPMENT

NOTES:

VALVES FOR THE POLYMER PIPING ARE SHOWN ON SHEET M-07

REV NO	DESCRIPTION	APP'D	DATE

SEAL

STATE OF TEXAS
DAVID J. ROSS
68267
REGISTERED PROFESSIONAL ENGINEER
2/19/99

SEAL

CH2M HILL
7600 West Tidwell Road, Suite 400
Houston Tx 77040
713.462.0161

Binkley & Barfield, Inc.
Consulting Engineers
1710 Seamist Drive Houston, Texas 77008

ALMEDA SIMS BIOSOLIDS DRYER REHABILITATION

GFS NO: 0298-05-3
FILE NO: 4289-4

PIPING PLAN FOR PUMPING IMPROVEMENTS

CITY OF HOUSTON

DEPARTMENT OF PUBLIC WORKS AND ENGINEERING
ENGINEERING, CONSTRUCTION AND REAL ESTATE GROUP

SECTION APPROVALS

WATER ENGINEERING	TRAFFIC AND SIGNAL ENGINEERING
WASTEWATER ENGINEERING 2-25-99	STREET & BRIDGE ENGINEERING
STORMWATER ENGINEERING	CONSTRUCTION 3/2/99
2/25/99	

OTHER DEPARTMENTS

PLANNING AND DEVELOPMENT	SPONSOR DEPARTMENT
CITY ENGINEER 3-2-99 DATE	
DIRECTOR OF PUBLIC WORKS AND ENGINEERING 3/8/99 DATE	

SUBMITTED:	DESIGNED BY: DJR
SCALE: 1/4"=1'-0" NONE	DRAWN BY: AAA
DATE:	DWG. NO. : M-02
SURVEY BY:	SHT NO 116 of 159 SHTS
F B NO:	CITY DWG NO: 35001

ORIGINAL SCALE IN INCHES FOR REDUCED PLANS
0 1 2 3
CADD DWG FILE NO F:/64305/

64305A/M03.DWG
FILE DATE--OPERATOR: 09/04/01--JRR

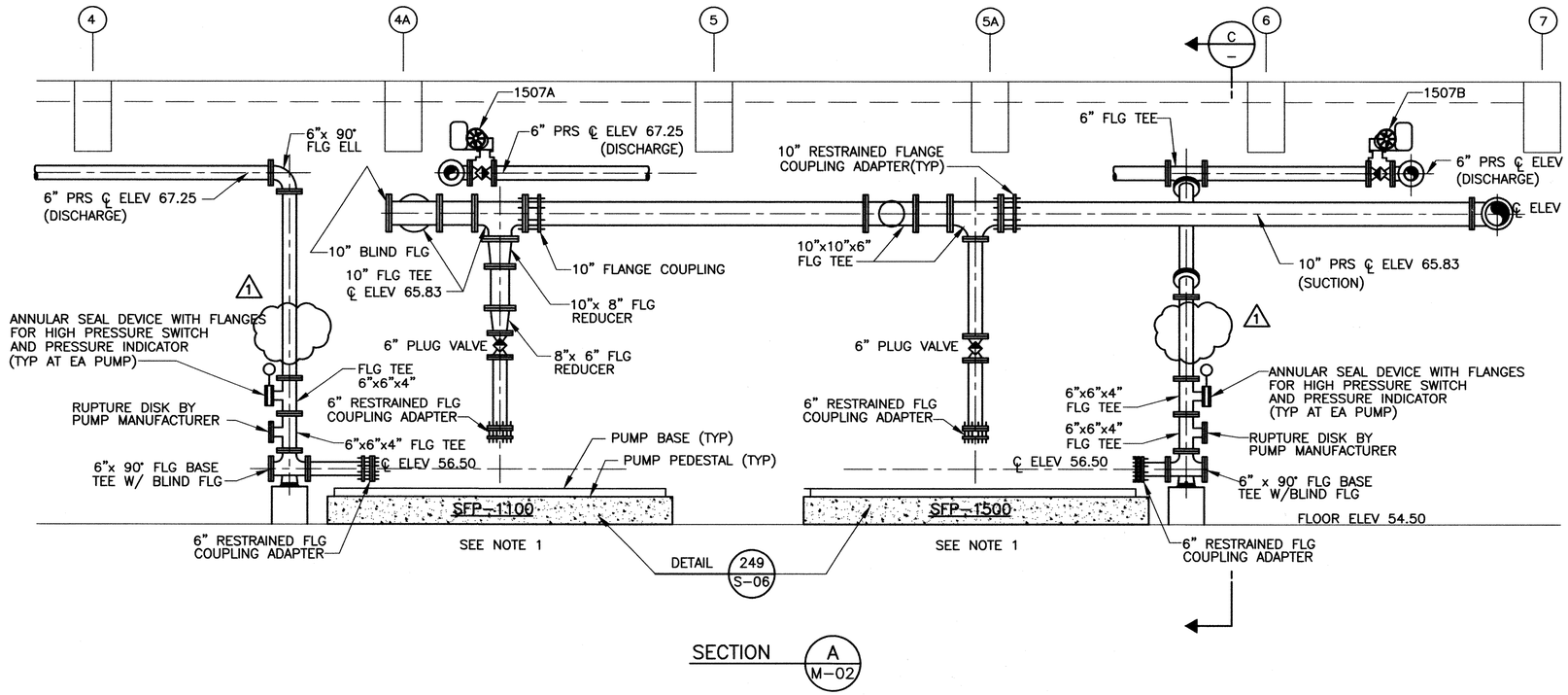

SECTION A M-02

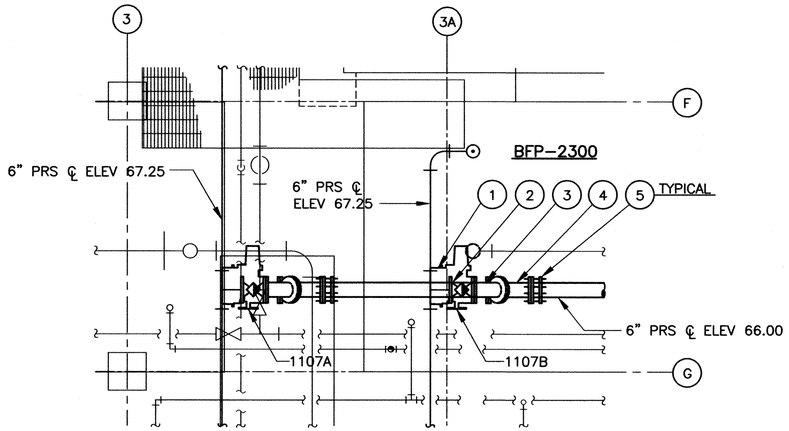

PLAN VIEW

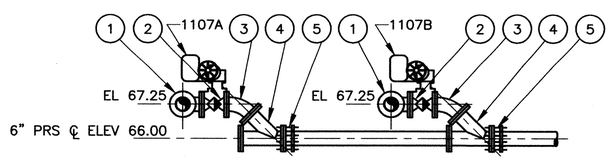

ELEVATION VIEW

SECTION B M-02

VALVE AND FITTING SCHEDULE		
ITEM NO	DESCRIPTION	QUANTITY
1	6" x 6" x 6" TEE FLG (EXISTING)	2
2	6" PLUG VALVE MOTOR OPERATED	2
3	6"-45° ELBOW, FLG X FLG	2
4	6" LATERAL FLG	2
5	6" RESTRAINED FLG COUPLING ADAPTER	2

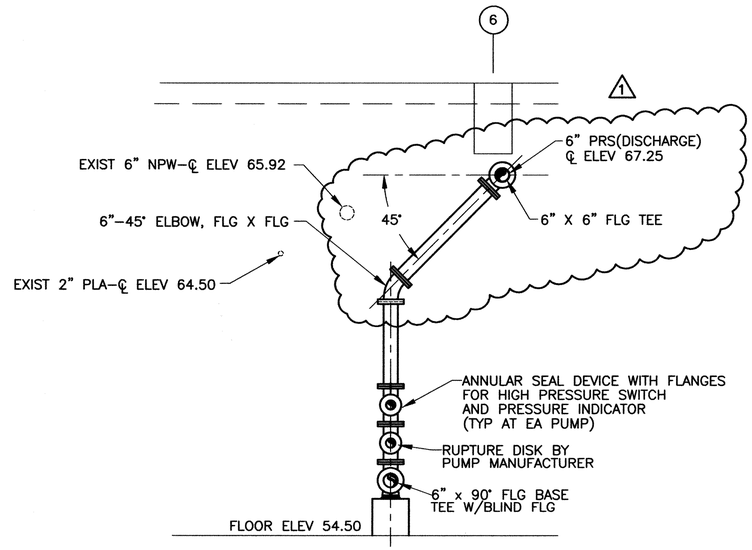

SECTION C M-02

NOTES:

1. ALTERNATE PIPING SYSTEMS ARE SHOWN FOR THE PIPING SUCTION TO SLUDGE PUMPS. THE CONTRACTOR MAY ELECT TO USE EITHER SYSTEM AS SHOWN ON THE DRAWINGS OR MODIFICATION TO REDUCE FROM THE 10" SUCTION HEADER TO THE 6" PUMP SUCTION. SUBMITTALS WILL BE REQUIRED.

REV NO	DESCRIPTION	APP'D	DATE
1	AS BUILT DRAWING	DJR	12/01

SEAL

STATE OF TEXAS
DAVID J. ROSS
68267
REGISTERED PROFESSIONAL ENGINEER

SEAL

As-Built

CH2M HILL
7600 West Tidwell Road, Suite 400
Houston Tx 77040
713.462.0161

Binkley & Barfield, Inc.
Consulting Engineers
1710 Seamist Drive Houston, Texas 77008

ALMEDA SIMS
BIOSOLIDS
DRYER REHABILITATION

GFS NO: 0298-05-3
FILE NO: 4289-4

PROCESS SLUDGE PUMPS
PLANS AND SECTIONS

CITY OF HOUSTON
DEPARTMENT OF PUBLIC WORKS AND ENGINEERING
ENGINEERING, CONSTRUCTION AND REAL ESTATE GROUP

SECTION APPROVALS

WATER ENGINEERING	TRAFFIC AND SIGNAL ENGINEERING
WASTEWATER ENGINEERING	STREET & BRIDGE ENGINEERING
STORMWATER ENGINEERING	CONSTRUCTION

OTHER DEPARTMENTS

PLANNING AND DEVELOPMENT	SPONSOR DEPARTMENT

CITY ENGINEER — DATE

DIRECTOR OF PUBLIC WORKS AND ENGINEERING — DATE

SUBMITTED:
SCALE: 3/8"=1'-0"
DATE:
SURVEY BY:
F B NO:

DESIGNED BY: DJR
DRAWN BY: AAA
DWG. NO. : M-03
SHT NO 117 of 159 SHTS
CITY DWG NO: 35001

ORIGINAL SCALE IN INCHES FOR REDUCED PLANS
0 1 2 3
CADD DWG FILE NO :F:/64305/

64305A/M03.DWG
01/22/99—RPD
FILE DATE—OPERATOR:

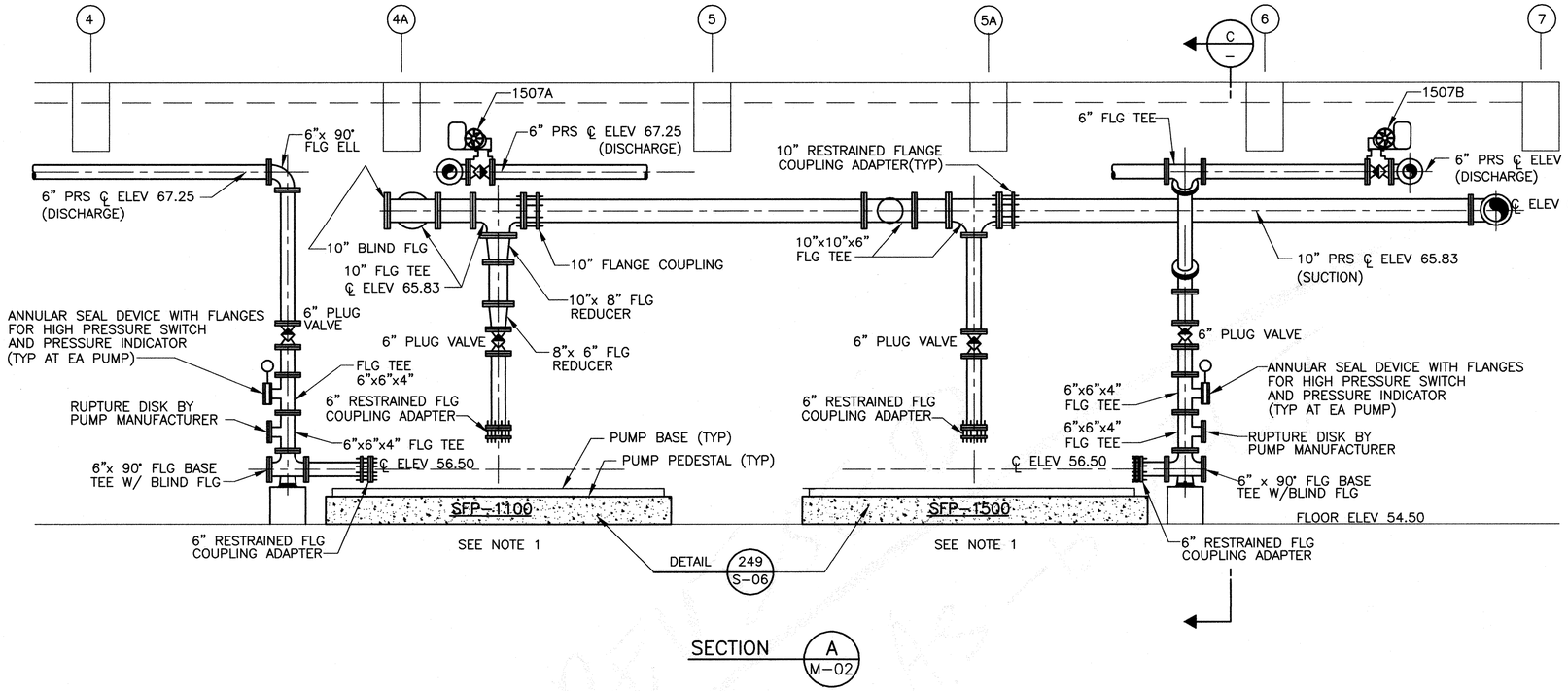

SECTION A M-02

NOTES:

1. ALTERNATE PIPING SYSTEMS ARE SHOWN FOR THE PIPING SUCTION TO SLUDGE PUMPS. THE CONTRACTOR MAY ELECT TO USE EITHER SYSTEM AS SHOWN ON THE DRAWINGS OR MODIFICATION TO REDUCE FROM THE 10" SUCTION HEADER TO THE 6" PUMP SUCTION. SUBMITTALS WILL BE REQUIRED.

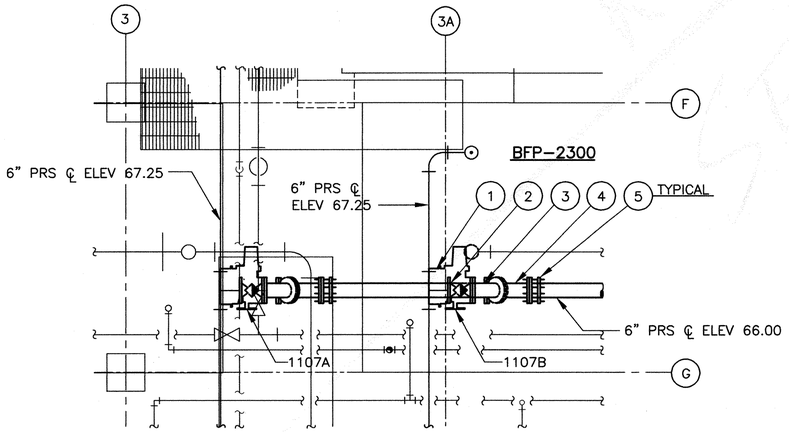

PLAN VIEW

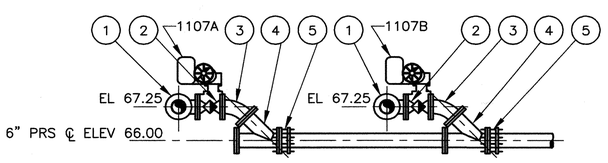

ELEVATION VIEW

SECTION B M-02

VALVE AND FITTING SCHEDULE		
ITEM NO	DESCRIPTION	QUANTITY
1	6" x 6" x 6" TEE FLG (EXISTING)	2
2	6" PLUG VALVE MOTOR OPERATED	2
3	6"–45° ELBOW, FLG X FLG	2
4	6" LATERAL FLG	2
5	6" RESTRAINED FLG COUPLING ADAPTER	2

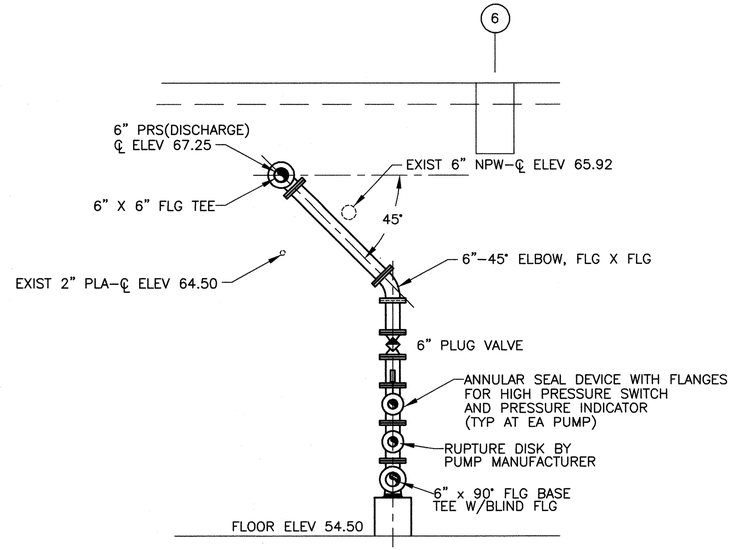

SECTION C M-02

REV NO	DESCRIPTION	APP'D	DATE

SEAL

STATE OF TEXAS
DAVID J. ROSS
68267
REGISTERED PROFESSIONAL ENGINEER
3/1/99

SEAL

CH2M HILL
7600 West Tidwell Road, Suite 400
Houston Tx 77040
713.462.0161

Binkley & Barfield, Inc.
Consulting Engineers
1710 Seamist Drive Houston, Texas 77008

ALMEDA SIMS
BIOSOLIDS
DRYER REHABILITATION

GFS NO: 0298-05-3
FILE NO: 4289-4

PROCESS SLUDGE PUMPS
PLANS AND SECTIONS

CITY OF HOUSTON
DEPARTMENT OF PUBLIC WORKS AND ENGINEERING
ENGINEERING, CONSTRUCTION AND REAL ESTATE GROUP

SECTION APPROVALS

WATER ENGINEERING
TRAFFIC AND SIGNAL ENGINEERING
Hamid Jamshidi 2-25-99
WASTEWATER ENGINEERING
STREET & BRIDGE ENGINEERING
STORMWATER ENGINEERING
Anthony Lucas 3/2/99
CONSTRUCTION
Zia Mahmood 3/2/99

OTHER DEPARTMENTS

PLANNING AND DEVELOPMENT
SPONSOR DEPARTMENT
CITY ENGINEER 3-2-99 DATE
DIRECTOR OF PUBLIC WORKS AND ENGINEERING 3/3/99 DATE

SUBMITTED:
SCALE: 3/8"=1'-0"
DATE:
SURVEY BY:
F B NO:

DESIGNED BY: DJR
DRAWN BY: AAA
DWG. NO. : M-03
SHT NO 117 of 159 SHTS
CITY DWG NO: 35001

ORIGINAL SCALE IN INCHES FOR REDUCED PLANS
0 1 2 3
CADD DWG FILE NO. :F:/64305/

64305A/M04.DWG
FILE DATE--OPERATOR: 02/18/99--DVB

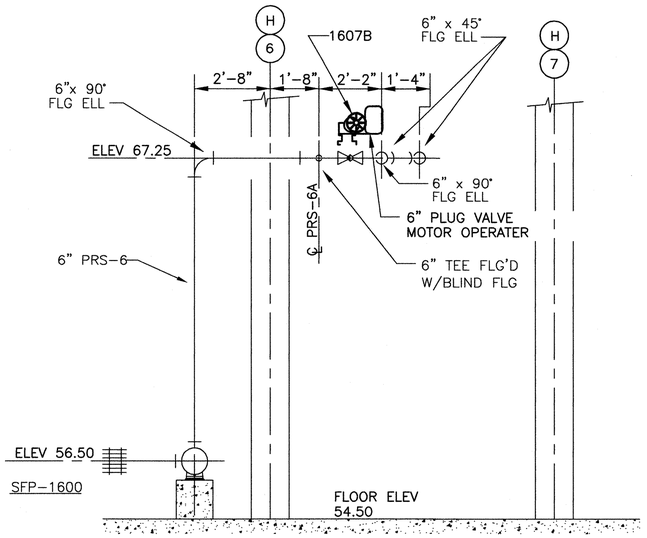

SECTION D / M-02
SCALE: 3/8"=1'-0"

PUMP DISCHARGE PIPING

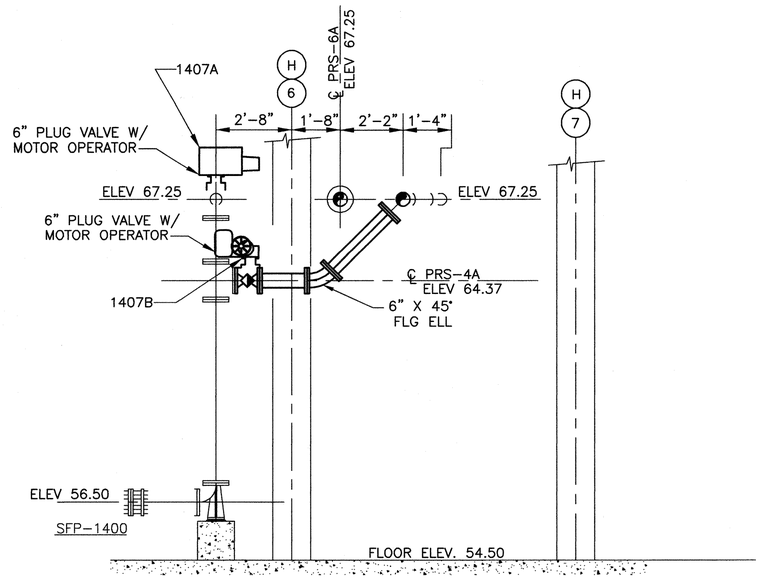

SECTION E / M-02
SCALE: 3/8"=1'-0"

PUMP DISCHARGE PIPING

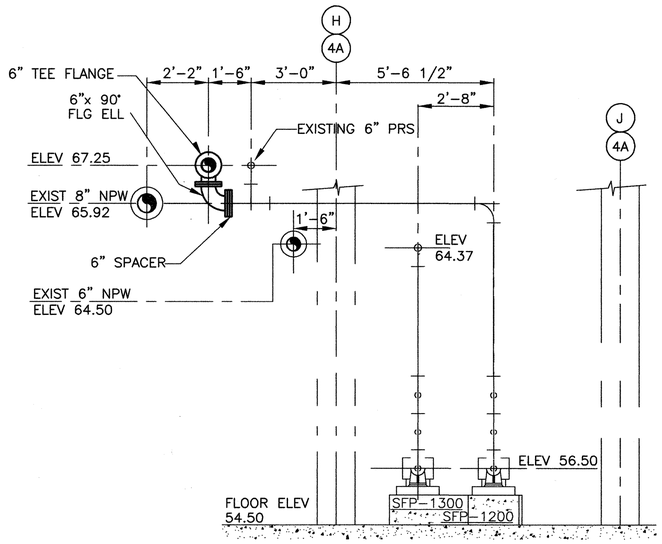

SECTION F / M-02
SCALE: 3/8"=1'-0"

PUMP DISCHARGE PIPING

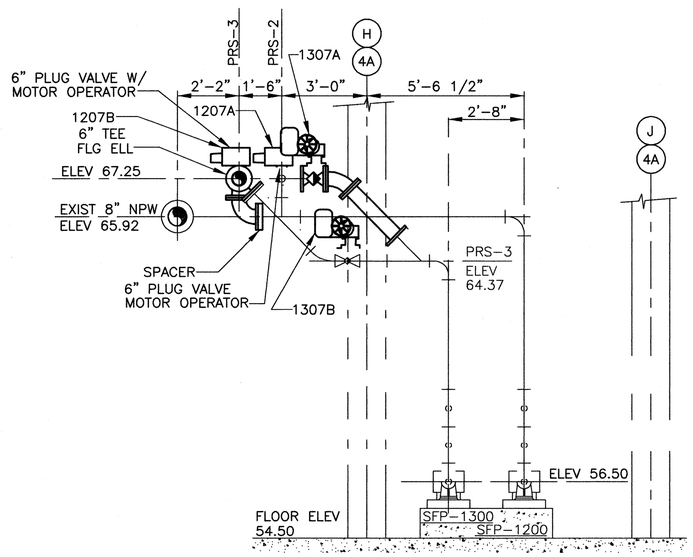

SECTION G / M-02
SCALE: 3/8"=1'-0"

PUMP DISCHARGE PIPING

NOTES:

1. SOME OF THE EXISTING VALVES THAT WILL HAVE ACTUATORS ADDED WILL NEED TO BE ROTATED TO PROVIDE CLEARANCE FOR ACTUATOR.

REV NO	DESCRIPTION	APP'D	DATE

SEAL

STATE OF TEXAS
DAVID J. ROSS
68267
REGISTERED PROFESSIONAL ENGINEER

SEAL

AS-BUILT
1/25/02

CH2M HILL
7600 West Tidwell Road, Suite 400
Houston Tx 77040
713.462.0161

Binkley & Barfield, Inc.
Consulting Engineers
1710 Seamist Drive Houston, Texas 77008

ALMEDA SIMS
BIOSOLIDS
DRYER REHABILITATION

GFS NO: 0298-05-3
FILE NO: 4289-4

PROCESS SLUDGE PUMPS
SECTIONS AND DETAILS

CITY OF HOUSTON
DEPARTMENT OF PUBLIC WORKS AND ENGINEERING
ENGINEERING, CONSTRUCTION AND REAL ESTATE GROUP

SECTION APPROVALS

WATER ENGINEERING

TRAFFIC AND SIGNAL ENGINEERING

WASTEWATER ENGINEERING — 2-25-99

STREET & BRIDGE ENGINEERING

STORMWATER ENGINEERING

CONSTRUCTION — 2/26/99

Zia Yoha — 2/25/99

OTHER DEPARTMENTS

PLANNING AND DEVELOPMENT

SPONSOR DEPARTMENT

CITY ENGINEER — 3-2-99 DATE

DIRECTOR OF PUBLIC WORKS AND ENGINEERING — 3/5/99 DATE

SUBMITTED:
SCALE: NONE
NONE
DATE:
SURVEY BY:
F B NO:

DESIGNED BY: DJR
DRAWN BY: AAA
DWG. NO. : M-04
SHT NO 118 of 159 SHTS
CITY DWG NO:
35001

ORIGINAL SCALE IN INCHES
FOR REDUCED PLANS
0 1 2 3
CADD DWG FILE NO. :F:/64305/

64305c/M05.dwg
FILE DATE—OPERATOR: 09-06-01 JRR

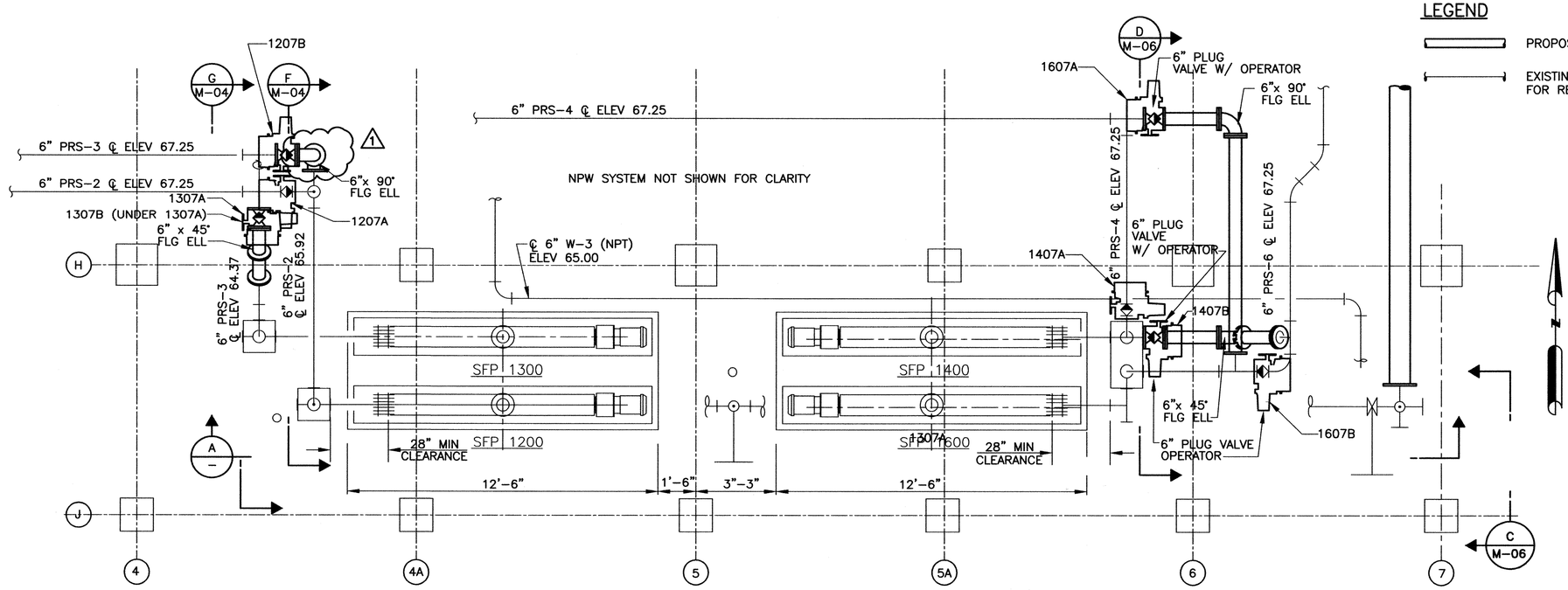

PLAN

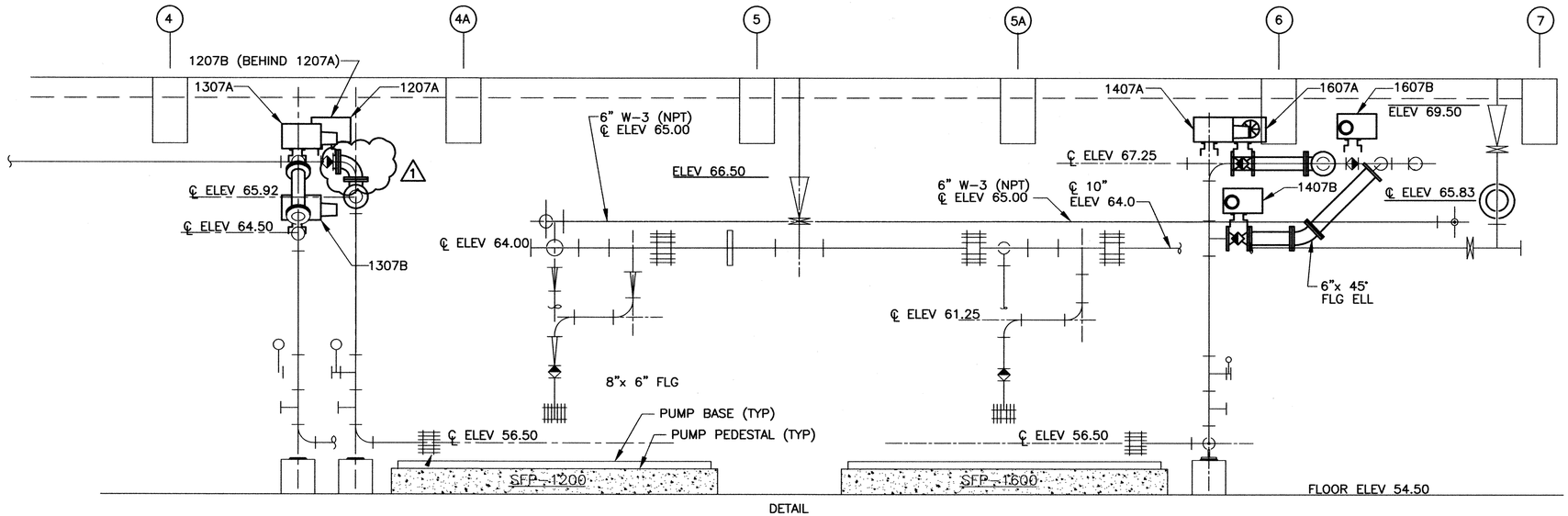

DETAIL

SECTION A

LEGEND

- PROPOSED PIPE
- EXISTING PIPE AVAILABLE FOR REUSE

NOTES:

1. THE CONTRACTOR MAY USE SALVAGED CAST IRON PIPE & FITTINGS AFTER CLEANING AND RECEIVING APPROVAL BY THE CITY OF HOUSTON'S AUTHORIZED REPRESENTATIVE. CONTRACTOR SHALL BE RESPONSIBLE FOR FOR ALL NECESSARY ADAPTERS IF TWO OR MORE PIPING MATERIALS ARE USED IN THE PIPING SYSTEM.
2. PIPE HANGERS AND SUPPORTS SHALL BE PER SPECIFICATIONS SECTION 15140 AND MISCELLANEOUS STANDARD DETAILS DRAWING S-02.

REV NO	DESCRIPTION	APP'D	DATE
1	AS BUILT DRAWING	DJR	12/01

SEAL

STATE OF TEXAS
DAVID J. ROSS
68267
REGISTERED PROFESSIONAL ENGINEER
1/25/02

SEAL

AS-BUILT
1/25/02

CH2M HILL
7600 West Tidwell Road, Suite 400
Houston Tx 77040
713.462.0161

Binkley & Barfield, Inc.
Consulting Engineers
1710 Seamist Drive Houston, Texas 77008

ALMEDA SIMS
BIOSOLIDS
DRYER REHABILITATION

GFS NO: 0298-05-3
FILE NO: 4289-4

PROCESS SLUDGE PUMPS
SECTIONS AND DETAILS

CITY OF HOUSTON
DEPARTMENT OF PUBLIC WORKS AND ENGINEERING
ENGINEERING, CONSTRUCTION AND REAL ESTATE GROUP

SECTION APPROVALS

WATER ENGINEERING	TRAFFIC AND SIGNAL ENGINEERING
WASTEWATER ENGINEERING	STREET & BRIDGE ENGINEERING
STORMWATER ENGINEERING	CONSTRUCTION

OTHER DEPARTMENTS

PLANNING AND DEVELOPMENT	SPONSOR DEPARTMENT

CITY ENGINEER _____ DATE _____

DIRECTOR OF PUBLIC WORKS AND ENGINEERING _____ DATE _____

SUBMITTED:	DESIGNED BY: DJR
SCALE: 3/8"=1'-0"	DRAWN BY: DVB
DATE:	DWG. NO. : M-05
SURVEY BY:	SHT NO 119 of 159 SHTS
F B NO:	CITY DWG NO: 35001

ORIGINAL SCALE IN INCHES FOR REDUCED PLANS
0 1 2 3
CADD DWG FILE NO :F:/64305/
ORIGINAL SCALE IN INCHES FOR REDUCED PLANS
0 1 2 3

64305A/M06.DWG
02/18/99-DVB
FILE DATE-OPERATOR:

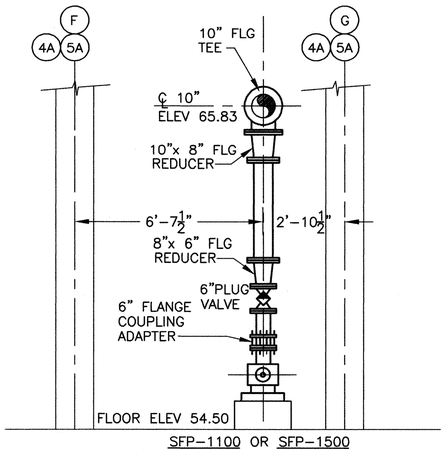

PUMP SUCTION PIPING

PUMPS USING STANDARD FITTING & CONCENTRIC REDUCERS TO PUMP INLETS

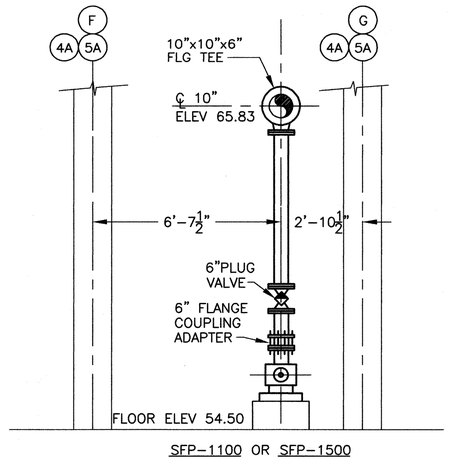

ALTERNATE PUMP SUCTION PIPING

ALTERNATE PIPING USING REDUCING TEES AND 6" PIPE FROM TEE TO PUMP INLETS

SECTION B M-05
SCALE: 3/8"=1'-0"

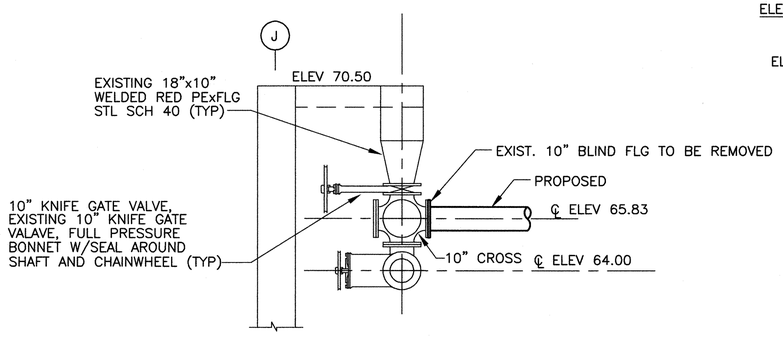

SECTION C M-05
SCALE: 3/8"=1'-0"

PUMP DISCHARGE PIPING

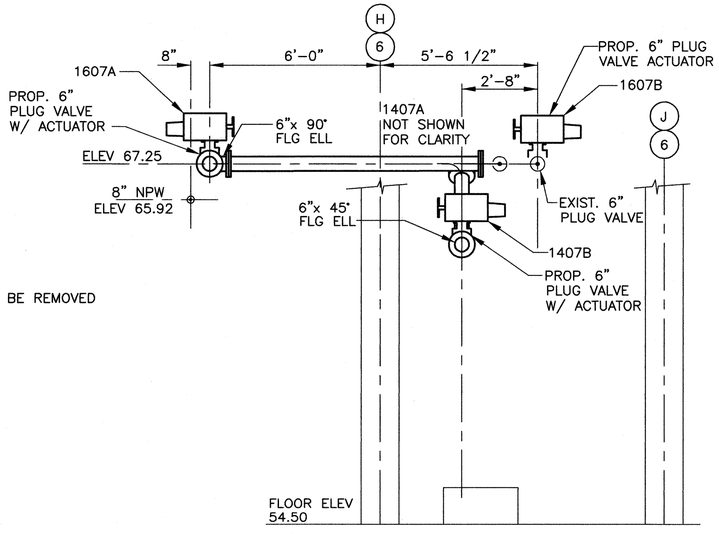

SECTION D M-05
SCALE: 3/8"=1'-0"

PUMP DISCHARGE PIPING

NOTES:

1. PIPE HANGERS AND SUPPORTS SHALL BE PER SPECIFICATIONS SECTION 15140 AND MISCELLANEOUS STANDARD DETAILS DRAWING S-02. ALL PIPE HANGERS SHALL BE 221/S-02 WHERE POSSIBLE.

REV NO	DESCRIPTION	APP'D	DATE

SEAL
STATE OF TEXAS
DAVID J. ROSS
68267
REGISTERED PROFESSIONAL ENGINEER
1/25/99

SEAL
AS-BUILT
1/25/02

CH2M HILL
7600 West Tidwell Road, Suite 400
Houston Tx 77040
713.462.0161

Binkley & Barfield, Inc.
Consulting Engineers
1710 Seamist Drive Houston, Texas 77008

ALMEDA SIMS
BIOSOLIDS
DRYER REHABILITATION

GFS NO: 0298-05-3
FILE NO: 4289-4

PROCESS SLUDGE PUMPS SECTIONS AND DETAILS

CITY OF HOUSTON
DEPARTMENT OF PUBLIC WORKS AND ENGINEERING
ENGINEERING, CONSTRUCTION AND REAL ESTATE GROUP

SECTION APPROVALS

WATER ENGINEERING
TRAFFIC AND SIGNAL ENGINEERING
WASTEWATER ENGINEERING 2-25-99
STREET & BRIDGE ENGINEERING
STORMWATER ENGINEERING
CONSTRUCTION 3/2/99
2/25/99

OTHER DEPARTMENTS

PLANNING AND DEVELOPMENT
SPONSOR DEPARTMENT
CITY ENGINEER 3-2-99 DATE
DIRECTOR OF PUBLIC WORKS AND ENGINEERING 3/3/99 DATE

SUBMITTED:
SCALE: 3/8"=1'-0"
DATE:
SURVEY BY:
F B NO:

DESIGNED BY: DJR
DRAWN BY: DVB
DWG. NO. : M-06
SHT NO 120 of 159 SHTS
CITY DWG NO: 35001

ORIGINAL SCALE IN INCHES FOR REDUCED PLANS
0 1 2 3
CADD DWG FILE NO :F:/64305/

64305A/M07.DWG
FILE DATE—OPERATOR: 01/07/99—LTG

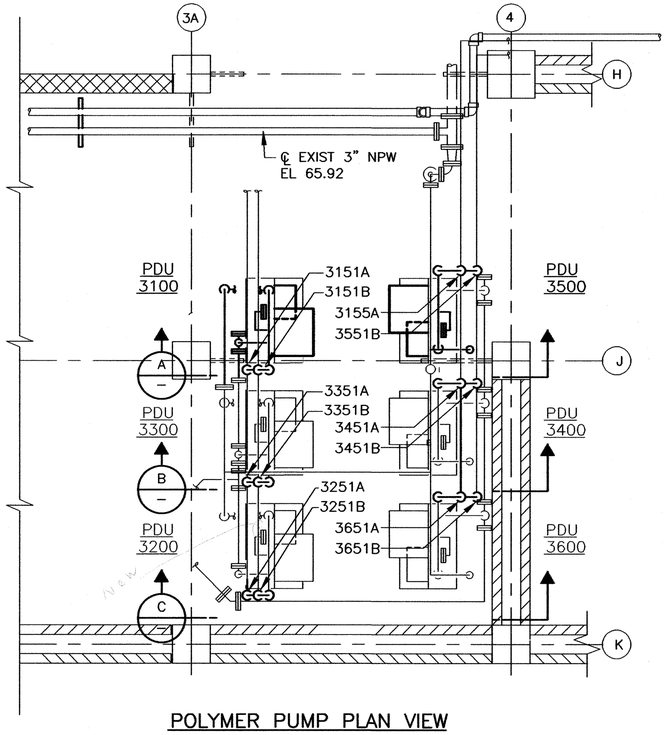

POLYMER PUMP PLAN VIEW

DETAIL 1 / M-02

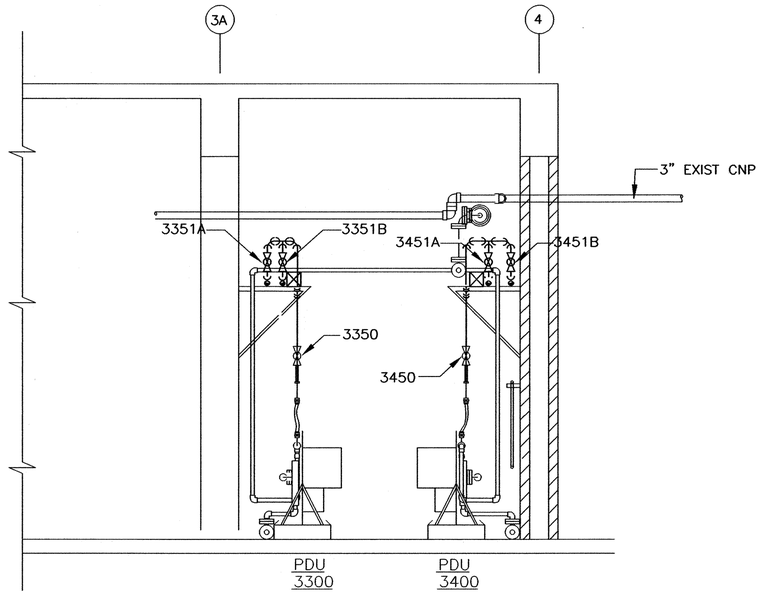

SECTION B / –

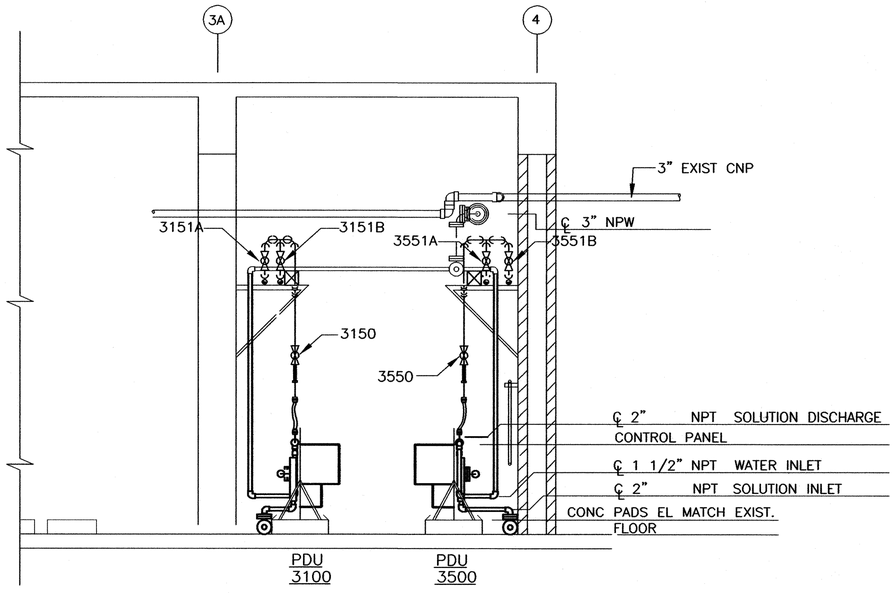

SECTION A / –

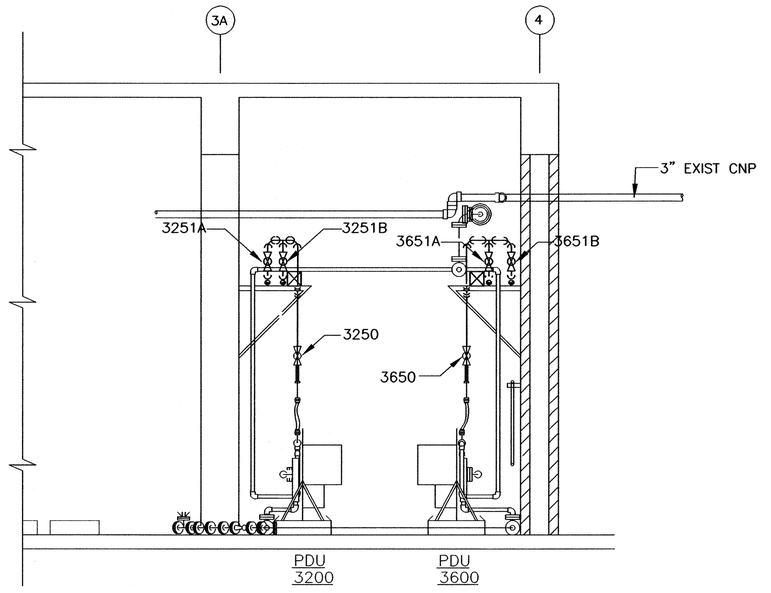

SECTION C / –

REV NO	DESCRIPTION	APP'D	DATE

SEAL

REGISTERED TEXAS DAVID J. ROSS 68267 REGISTERED PROFESSIONAL ENGINEER

4/19/99

SEAL

AS-BUILT
David Ross
1/25/02

CH2M HILL
7600 West Tidwell Road, Suite 400
Houston Tx 77040
713.462.0161

Binkley & Barfield, Inc.
Consulting Engineers
1710 Seamist Drive Houston, Texas 77008

ALMEDA SIMS
BIOSOLIDS
DRYER REHABILITATION

GFS NO: 0298-05-3
FILE NO: 4289-4

POLYMER DILUTION SYSTEM
PLAN AND SECTION

CITY OF HOUSTON
DEPARTMENT OF PUBLIC WORKS AND ENGINEERING
ENGINEERING, CONSTRUCTION AND REAL ESTATE GROUP

SECTION APPROVALS

WATER ENGINEERING

TRAFFIC AND SIGNAL ENGINEERING

Hamid Yousef 2-25-99
WASTEWATER ENGINEERING

STREET & BRIDGE ENGINEERING

STORMWATER ENGINEERING

Courtney Rose 3/2/99
CONSTRUCTION

Zaid Mahmood 2/25/99

OTHER DEPARTMENTS

PLANNING AND DEVELOPMENT

SPONSOR DEPARTMENT

Herbert Lum 3-2-99
CITY ENGINEER DATE

DIRECTOR OF PUBLIC WORKS AND ENGINEERING 3/5/99 DATE

SUBMITTED:
SCALE: NONE
DATE:
SURVEY BY:
F B NO:

DESIGNED BY: DJR
DRAWN BY: LTG
DWG. NO. : M-07
SHT NO 121 of 159 SHTS
CITY DWG NO: 35001

ORIGINAL SCALE IN INCHES FOR REDUCED PLANS
0 1 2 3
CADD DWG FILE NO :F:/64305/

FILE DATE--OPERATOR: 02/23/99--DVB

FURNACE NO. 1 DAMAGE

	DAMAGE	CORRECTIVE ACTION
1	BRICKS FALLING FROM ARCH	REMOVE , CLEAN, AND REINSTALL ENTIRE ARCH REPLACING ALL DAMAGED BRICKS
2	BRICKS CRACKED IN SITE GLASS LEDGE	REMOVE , CLEAN, AND REINSTALL ENTIRE LEDGE REPLACING ALL DAMAGED BRICKS
3	BRICKS CRACKED FROM CENTER AND LEFT OF RELIEF DOOR TO ROOF	REMOVE , CLEAN, AND REINSTALL WALL PORTIONS WITH CRACK REPLACING THE DAMAGED BRICKS
4	ENTIRE WALL BULGING INWARD ABOVE RELIEF DOOR	REMOVE , CLEAN, AND REINSTALL WALL PORTIONS WITH CRACK REPLACING THE DAMAGED BRICKS AND INSULATION
5	BRICKS MISSING BELOW RELIEF DOOR	INSTALL NEW BRICKS--REMOVE , CLEAN, AND REPLACE WALL PORTIONS AS REQUIRED TO REPLACE MISSING BRICK
6	TUBES FALLING, MELTED OR CRACKED WARPED BAFFEL PLATE, EAST TUBE PACK SEVERELY DAMAGED	REPLACE ONE TUBE PACK WITH NEW TUBE PACK REPLACE DAMAGED TUBES IN REMAINING PACK WITH SALVAGED USABLE TUBES FROM REMOVED PACK OR NEW TUBES. REPAIR BOTTOM BAFFEL PLATE.
7	BRICKS FALLING, DAMAGED, OR CRACKED FOR ENTIRE WALL HEIGHT	REMOVE, CLEAN AND REINSTALL ENTIRE ARCH REPLACING ALL DAMAGED BRICKS
8	FLOOR BULGING UPWARD	REMOVE, CLEAN AND REINSTALL FLOOR PORTIONS WITH BULGE REPLACING ANY DAMAGED BRICKS AND INSULATION
9	BURNER RING MELTED OR DETERIORATED	REPLACE BURNER RING
10	CRACK FROM TOP OF BURNER RING TO ROOF	REMOVE, CLEAN AND REINSTALL ENTIRE RING REPLACING ALL DAMAGED BRICKS
11	WARPED 4' X 4' SSTEEL PLATE ON OUTSIDE OF FURNACE	REPLACE 4' X 4' STEEL PLATE ON OUTSIDE OF FURNACE REPLACING INSULATION AS REQUIRED
12	SOOT BLOWER LINE NOT CONNECTED	RECONNECT SOOT BLOWER LINE REPLACING PIPING AND VALVES AS REQUIRED
13	MISSING INSPECTION PORT VIEW GLASS AND COVERS	REPLACE INSPECTION PORT VIEW GLASS AND COVER
14	DAMAGED RAM BURNER AND WIND BOX	REPLACE RAM BURNER AND WIND BOX

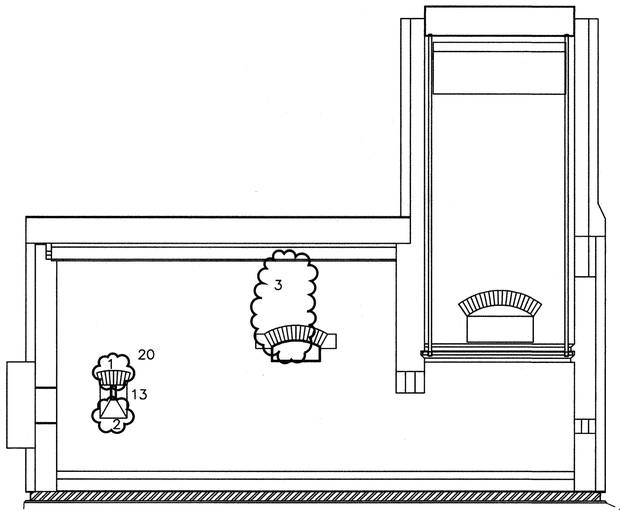

WEST INSIDE VIEW

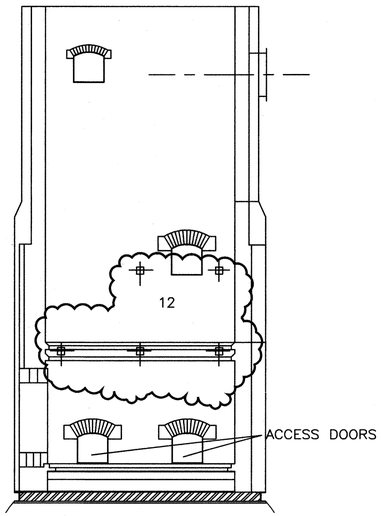

NORTH INSIDE VIEW

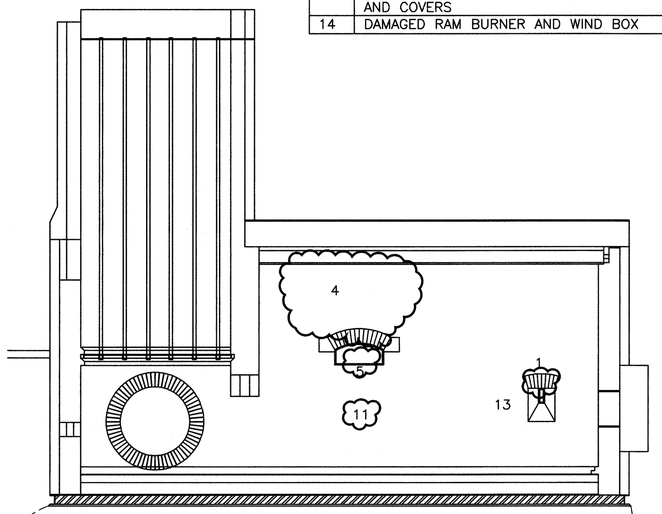

EAST INSIDE VIEW

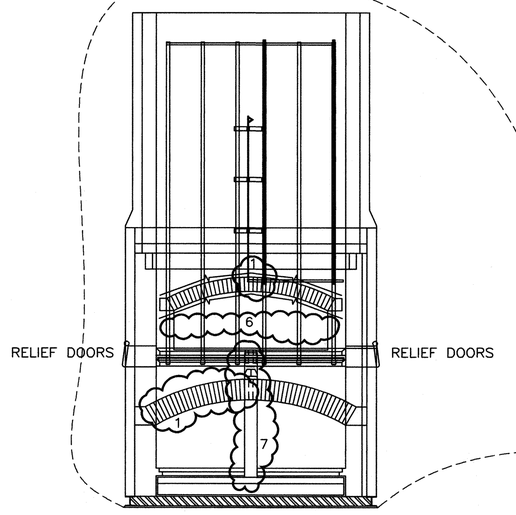

SECTION LOOKING NORTH

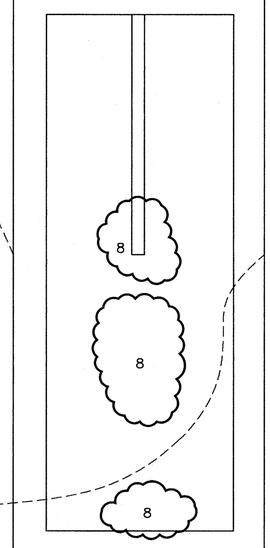

PLAN

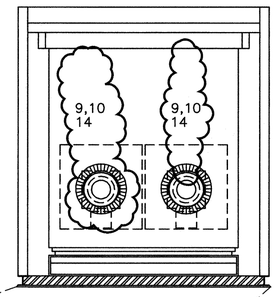

SOUTH INSIDE VIEW

NOTES:

1. PREVIOUS PROJECT RECORDS INDICATE THAT ASBESTOS MATERIAL WAS USED UNDER THE FLOOR BRICK IN THE FURNACE. IN ADDITION IT MAY BE PRESENT OTHER PLACES IN THE DRYER SYSTEM. THE CONTRACTOR MUST TAKE ADEQUATE PRECAUTIONS AND APPROPRIATE MEASURES TO SAFEGUARD PEOPLE AND ADHERE TO ALL APPLICABE REGULATIONS.

REV NO	DESCRIPTION	APP'D	DATE

SEAL

STATE OF TEXAS
DAVID J. ROSS
68267
REGISTERED PROFESSIONAL ENGINEER

SEAL

AS-BUILT
1/25/02

CH2M HILL
7600 West Tidwell Road, Suite 400
Houston Tx 77040
713.462.0161

Binkley & Barfield, Inc.
Consulting Engineers
1710 Seamist Drive Houston, Texas 77008

ALMEDA SIMS
BIOSOLIDS
DRYER REHABILITATION

GFS NO: 0298-05-3
FILE NO: 4289-4

FURNACE No. 1
PLAN AND SECTIONS

CITY OF HOUSTON

DEPARTMENT OF PUBLIC WORKS AND ENGINEERING
ENGINEERING, CONSTRUCTION AND REAL ESTATE GROUP

SECTION APPROVALS

WATER ENGINEERING

TRAFFIC AND SIGNAL ENGINEERING

WASTEWATER ENGINEERING 2-25-99

STREET & BRIDGE ENGINEERING

STORMWATER ENGINEERING

CONSTRUCTION 3/26/99

3/25/99

OTHER DEPARTMENTS

PLANNING AND DEVELOPMENT

SPONSOR DEPARTMENT

CITY ENGINEER 3-2-99 DATE

DIRECTOR, DEPARTMENT OF PUBLIC WORKS AND ENGINEERING 3/5/99 DATE

SUBMITTED:
SCALE: 1"=4'
DATE:
SURVEY BY:
F B NO:

DESIGNED BY: DJR
DRAWN BY: DVB
DWG. NO. : M-08
SHT NO 122 of 159 SHTS

CITY DWG NO:
35001

ORIGINAL SCALE IN INCHES FOR REDUCED PLANS
0 1 2 3
CADD DWG FILE NO :F:/64305/64305A/M08.DWG

FILE DATE--OPERATOR: 02/22/99--DVB

FURNACE NO. 2 DAMAGE

	DAMAGE	CORRECTIVE ACTION
1	CRACKS IN WALL ABOVE SITE GLASS	REMOVE , CLEAN, AND REINSTALL WALL PORTIONS WITH CRACK REPLACING THE DAMAGED BRICKS AND INSULATION
2	ENTIRE WALL BULGING INWARD ABOVE EXPLOSION VENT	REMOVE , CLEAN, AND REINSTALL WALL PORTIONS WITH CRACK REPLACING THE DAMAGED BRICKS AND INSULATION
3	BRICKS MISSING BELOW RELIEF DOOR	INSTALL NEW BRICKS–REMOVE , CLEAN, AND REPLACE WALL PORTIONS AS REQUIRED TO REPLACE MISSING BRICK
4	BURNER RING MELTED OR DETERIORATED	REPLACE BURNER RING
5	BROKEN OR DAMAGED RING BRICK	REMOVE, CLEAN, AND REINSTALL ENTIRE RING REPLACING ALL DAMAGED BRICKS
6	MISSING INSPECTION PORT VIEW GLASS AND COVERS	REPLACE INSPECTION PORT VIEW GLASS AND COVER
7	MISSING 2–INCH GATE VALVE ON SOOT BLOWER LINE	INSTALL NEW 2–INCH GATE VALVE AND RECONNECT SOOT BLOWER LINE REPLACING PIPING AS REQUIRED
8	DAMAGED RAM BURNER AND WIND BOX	REPLACE RAM BURNER AND WIND BOX
9	DAMAGED OR MISSING INSULATION BLOCK	REPLACE DAMAGED OR MISSING INSULATION BLOCK
10	DAMAGED EXPANSION JOINT ABOVE FURNACE HOOD	REMOVE AND REPLACE EXPANSION JOINT ABOVE FURNACE HOOD
11	DAMAGED REFRACTORY IN CONDUIT BETWEEN FURNACE AND VAPOR FAN	REMOVE AND REPLACE DAMAGED REFRACTORY IN CONDUIT BETWEEN FURNACE AND VAPOR PAN
12	HOLES IN THE FURNACE HOOD	REMOVE EXISTING HOOD AND INSTALL NEW HOOD AND DAMPER
13	DAMAGED FLOOR	REMOVE, CLEAN, AND REINSTALL FLOOR PORTIONS WITH DAMAGE, REPLACING ANY DAMAGED BRICKS AND INSULATION, REUSE OF EXISTING BRICK PREFERRED
14	TUBES FALLING, MELTED OR CRACKED WARPED BAFFLE PLATE, WEST TUBE PACK DAMAGED SEVERELY	REPLACE ONE TUBE PACK WITH NEW TUBE PACK. REPLACE DAMAGED TUBES IN REMAINING PACK WITH SALVAGED USABLE TUBES FROM REMOVED PACK OR NEW TUBES. REPAIR BOTTOM BAFFLE PLATE
15	DAMAGED OR DETERIORATED BRICK BURNER RING	REMOVE, CLEAN, AND REINSTALL ENTIRE BRICK BURNER RING REPLACING ALL DAMAGED BRICKS
16	BRICKS FALLING, DAMAGED, OR CRACKED FOR ENTIRE WALL HEIGHT	REMOVE, CLEAN AND REINSTALL ENTIRE ARCH REPLACING ALL DAMAGED BRICKS
17	DAMAGED OR GROUTED EXPANSION JOINT	REMOVE EXISTING GROUT AND INSTALL NEW HIGH TEMPERATURE ROPE TYPE EXPANSION JOINT MAT

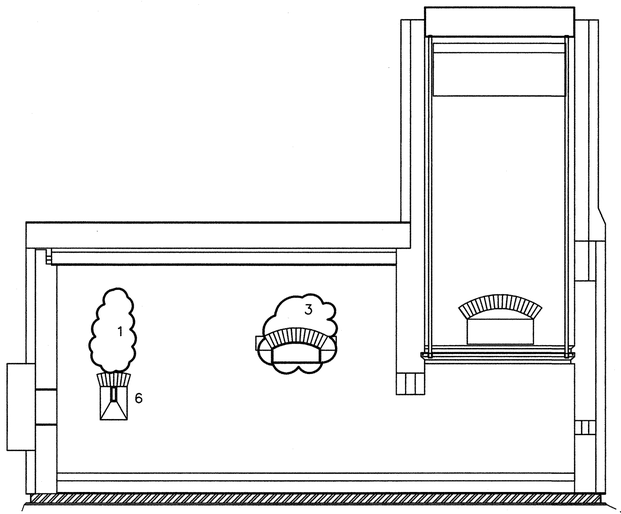

EAST INSIDE VIEW

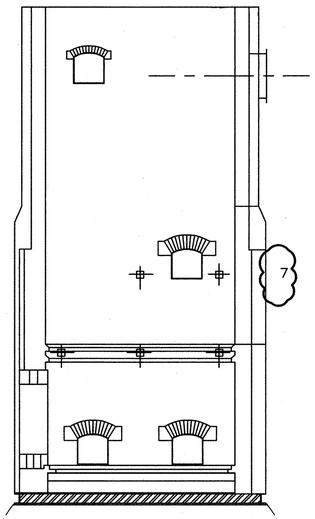

NORTH INSIDE VIEW

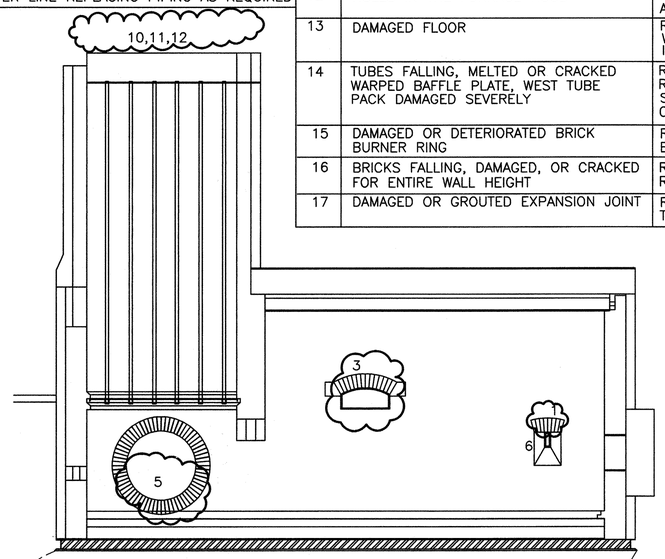

WEST INSIDE VIEW

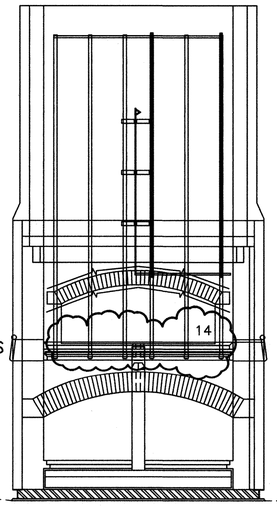

RELIEF DOORS RELIEF DOORS

SECTION LOOKING NORTH

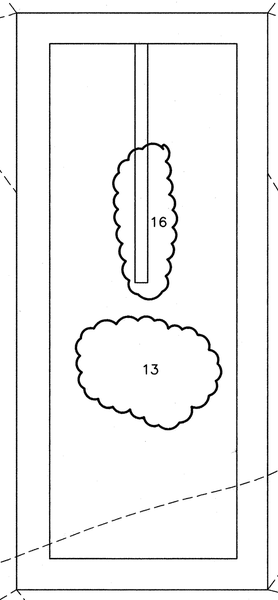

PLAN

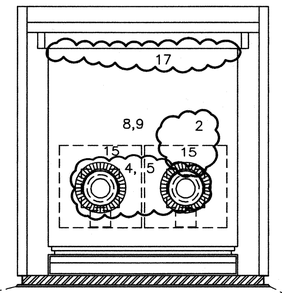

SOUTH INSIDE VIEW

NOTES:

1. PREVIOUS PROJECT RECORDS INDICATE THAT ASBESTOS MATERIAL WAS USED UNDER THE FLOOR BRICK IN THE FURNACE. IN ADDITION IT MAY BE PRESENT OTHER PLACES IN THE DRYER SYSTEM. THE CONTRACTOR MUST TAKE ADEQUATE PRECAUTIONS AND APPROPRIATE MEASURES TO SAFEGUARD PEOPLE AND ADHERE TO ALL APPLICABE REGULATIONS.

REV NO	DESCRIPTION	APP'D	DATE

SEAL

STATE OF TEXAS
DAVID J. ROSS
68267
REGISTERED PROFESSIONAL ENGINEER
1/25/99

SEAL

AS-BUILT
1/25/02

CH2M HILL
7600 West Tidwell Road, Suite 400
Houston Tx 77040
713.462.0161

Binkley & Barfield, Inc.
Consulting Engineers
1710 Seamist Drive Houston, Texas 77008

ALMEDA SIMS
BIOSOLIDS
DRYER REHABILITATION

GFS NO: 0298–05–3
FILE NO: 4289–4

FURNACE No. 2
PLAN AND SECTIONS

CITY OF HOUSTON
DEPARTMENT OF PUBLIC WORKS AND ENGINEERING
ENGINEERING, CONSTRUCTION AND REAL ESTATE GROUP

SECTION APPROVALS

WATER ENGINEERING

TRAFFIC AND SIGNAL ENGINEERING

WASTEWATER ENGINEERING 2-25-99

STREET & BRIDGE ENGINEERING

STORMWATER ENGINEERING

CONSTRUCTION 3/2/99

3/5/99

OTHER DEPARTMENTS

PLANNING AND DEVELOPMENT

SPONSOR DEPARTMENT

CITY ENGINEER 3-2-99 DATE

DIRECTOR OF PUBLIC WORKS AND ENGINEERING 3/5/99 DATE

SUBMITTED:
SCALE: 1"=50'
DATE:
SURVEY BY:
F B NO:

DESIGNED BY: DJR
DRAWN BY: DVB
DWG. NO. : M–09
SHT NO 123 of 159 SHTS

CITY DWG NO:
35001

ORIGINAL SCALE IN INCHES FOR REDUCED PLANS
0 1 2 3
CADD DWG FILE NO :F:/64305.64305A/M09.DWG

FILE DATE--OPERATOR: 02/22/99--DVB

NOTES:

1. CYCLONE NO. 1 IS SHOWN. CYCLONE NO. 2 IS A MIRROR IMAGE WITH SIMILAR REPAIRS REQUIRED.

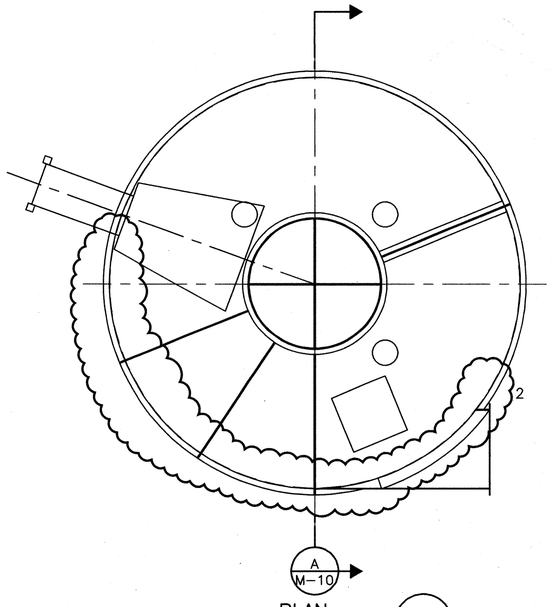

PLAN
SCALE: 3/8" = 1'-0"
M-10

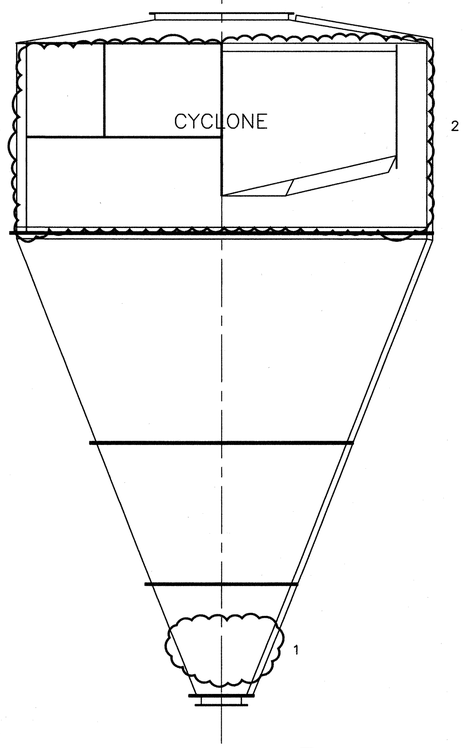

ELEVATION
SCALE: 3/8" = 1'-0"
M-10

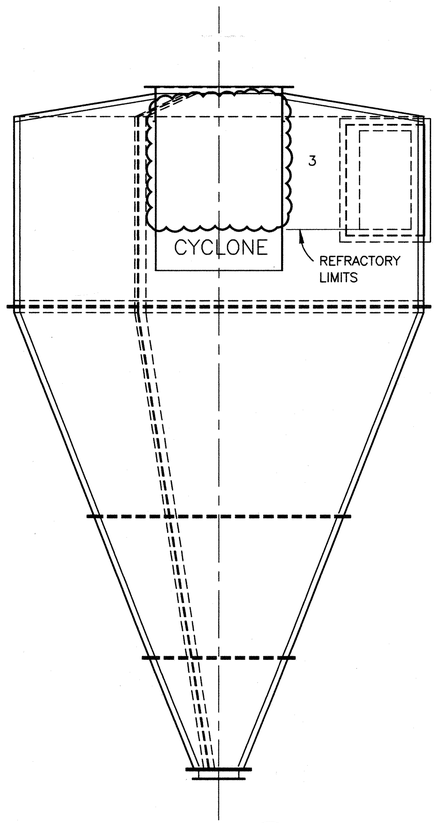

SECTION
SCALE: 3/8" = 1'-0"
A
M-10

CYCLONE DAMAGE		
	DAMAGE	CORRECTIVE ACTION
1	DAMAGED REFRACTORY	REMOVE DAMAGED REFRACTORY AND ANCHORS INSTALL NEW ANCHORS AND REFRACTORY
2	DAMAGED REFRACTORY AND EXPANDED PANEL	REPAIR WORN AOR DAMAGED EXPANDED METAL, THEN INSTALL NEW REFRACTORY
3	NO EXISTING REFRACTORY OR ANCHORS	INSTALL NEW ANCHORS AND REFRACTORY

REV NO	DESCRIPTION	APP'D	DATE

SEAL

LICENSED DAVID J. ROSS 68267 REGISTERED PROFESSIONAL ENGINEER, STATE OF TEXAS — 1/29/99

SEAL

AS-BUILT
1/25/02

CH2M HILL
7600 West Tidwell Road, Suite 400
Houston Tx 77040
713.462.0161

Binkley & Barfield, Inc.
Consulting Engineers
1710 Seamist Drive Houston, Texas 77008

ALMEDA SIMS
BIOSOLIDS
DRYER REHABILITATION

GFS NO: 0298-05-3
FILE NO: 4289-4

CYCLONE NO. 1
PLANS AND ELEVATIONS

CITY OF HOUSTON
DEPARTMENT OF PUBLIC WORKS AND ENGINEERING
ENGINEERING, CONSTRUCTION AND REAL ESTATE GROUP

SECTION APPROVALS

WATER ENGINEERING

TRAFFIC AND SIGNAL ENGINEERING

WASTEWATER ENGINEERING — 2-25-99

STREET & BRIDGE ENGINEERING

STORMWATER ENGINEERING

CONSTRUCTION — 3/2/99

2/25/99

OTHER DEPARTMENTS

PLANNING AND DEVELOPMENT

SPONSOR DEPARTMENT

CITY ENGINEER — 3-2-99 DATE

DIRECTOR OF PUBLIC WORKS AND ENGINEERING — 3/5/99 DATE

SUBMITTED:
SCALE: 3/8"-1'-0"
N/A
DATE:
SURVEY BY:
F B NO:

DESIGNED BY: DJR
DRAWN BY: DVB
DWG. NO. : M-10
SHT NO 124 of 159 SHTS

CITY DWG NO:
35001

ORIGINAL SCALE IN INCHES FOR REDUCED PLANS
0 1 2 3
CADD DWG FILE NO. :F:/64305/64305A/M-10.DWG

FILE DATE—OPERATOR: 09-06-01 JRR

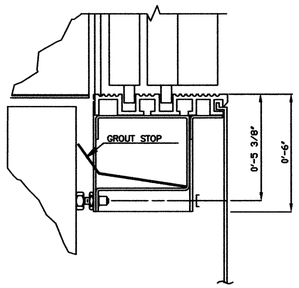

SILL DETAIL — A / M-11

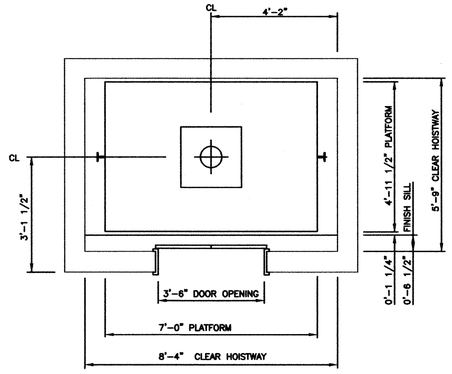

PLAN VIEW CENTER OPENING — B / M-11

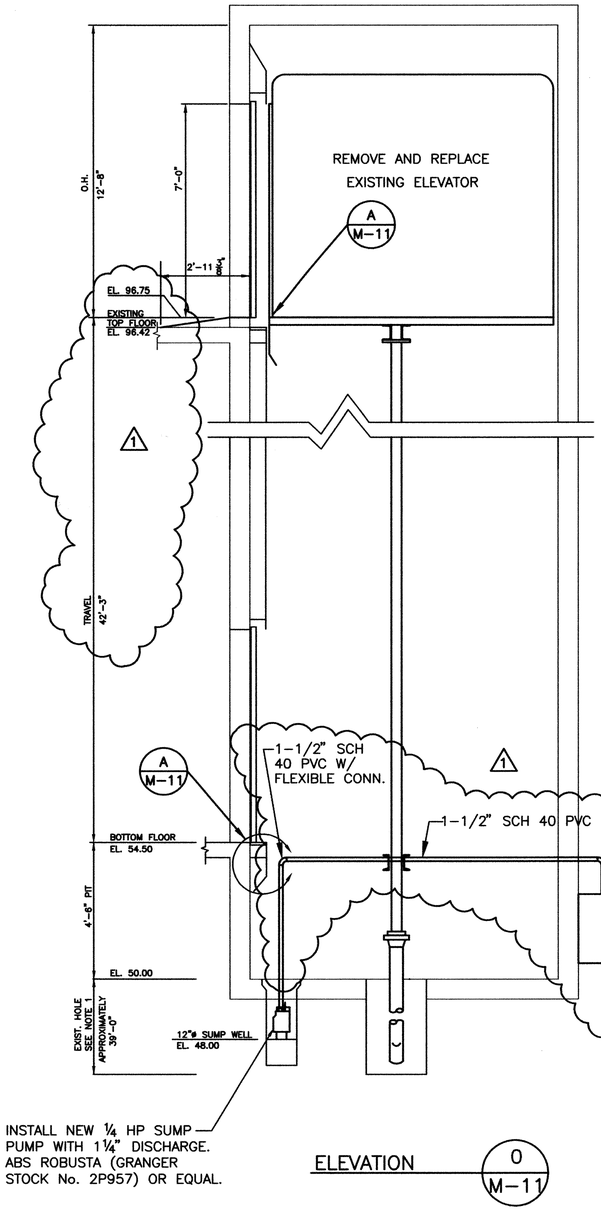

ELEVATION — 0 / M-11

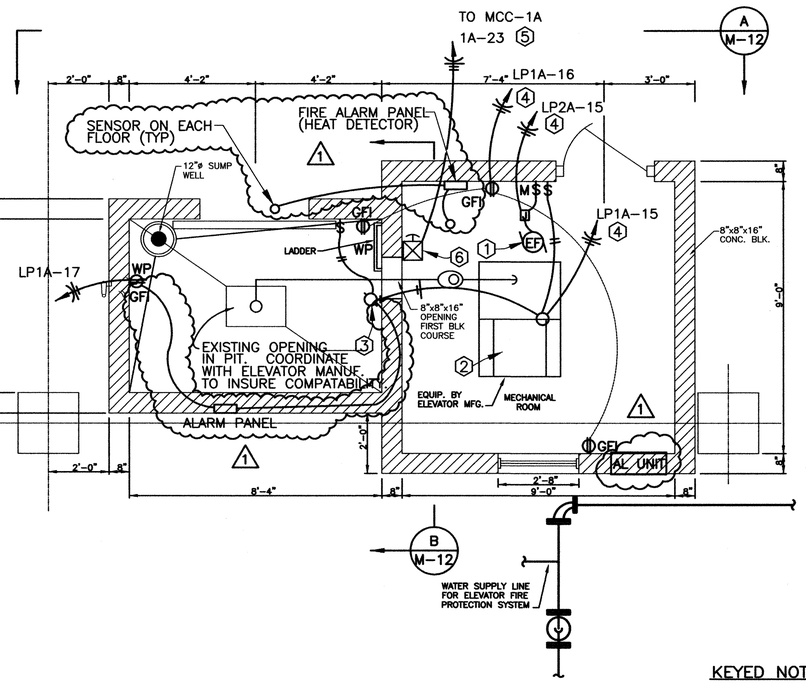

EXISTING ELEVATOR PLAN — C / M-11

KEYED NOTES:

1. REPLACE THE EXISTING FAN WITH COOK MODEL NO.70C10DM , 1/25 HP OR APPROVED EQUAL.
2. REPLACE THE EXISTING LIGHTING FIXTURE WITH NEW LITHONIA CAT.#2M-440 A19-120ES FIXTURE OR APPROVED EQUAL.
3. REPLACE THE EXISTING FIXTURE WITH NEW LITHONIA CAT.# VR2-100W-120 FIXTURE OR APPROVED EQUAL.
4. REPLACE THE EXISTING BRANCH CIRCUIT CONDUCTORS AND DEVICES.
5. REPLACE THE EXISTING BRANCH CIRCUIT CONDUCTORS.
6. REPLACE THE EXISTING ELEVATOR CONTROLLERS WITH NEW DISCONNECT AND CONTROLLER. THE CONTROLER AND DISCONNECT SHALL BE FURNISHED BY THE ELEVATOR SUPPLIER AND SHALL BE PER LOCAL, STATE AND NATIONAL CODES. PROVIDE NECCESSARY SMOKE/FIRE DETECTION SYSTEM AND CONTROLS TO THE POWER DISCONNECT.

NOTES:

1. HOLE SIZE AND DEPTH SHOULD BE FIELD VERIFIED PRIOR TO INSTALLATION AND MODIFIED TO MEET ELEVATOR MANUFACTURER SPECIFICATIONS.
2. ALL DIMENSIONS SHOULD BE FIELD VERIFIED AND ADJUSTED PRIOR TO FABRICATION OF THE ELEVATOR.

REV NO	DESCRIPTION	APP'D	DATE
1	AS BUILT DRAWING	DJR	12/01

SEAL — STATE OF TEXAS, DAVID J. ROSS, 68267, REGISTERED PROFESSIONAL ENGINEER — 1/25/02

SEAL — AS-BUILT — 1/25/02

CH2M HILL
7600 West Tidwell Road, Suite 400
Houston Tx 77040
713.462.0161

Binkley & Barfield, Inc.
Consulting Engineers
1710 Seamist Drive Houston, Texas 77008

ALMEDA SIMS
BIOSOLIDS
DRYER REHABILITATION

GFS NO: 0298-05-3
FILE NO: 4289-4

HYDRAULIC PASSENGER ELEVATOR
50000 LB. CAPACITY

CITY OF HOUSTON
DEPARTMENT OF PUBLIC WORKS AND ENGINEERING
ENGINEERING, CONSTRUCTION AND REAL ESTATE GROUP

SECTION APPROVALS

WATER ENGINEERING
TRAFFIC AND SIGNAL ENGINEERING
WASTEWATER ENGINEERING
STREET & BRIDGE ENGINEERING
STORMWATER ENGINEERING
CONSTRUCTION

OTHER DEPARTMENTS

PLANNING AND DEVELOPMENT
SPONSOR DEPARTMENT

CITY ENGINEER — DATE

DIRECTOR OF PUBLIC WORKS AND ENGINEERING — DATE

SUBMITTED:
SCALE: NONE
NONE
DATE:
SURVEY BY:
F B NO:

DESIGNED BY: DJR
DRAWN BY: JRR
DWG. NO. : M-11
SHT NO 125 of 159 SHTS

CITY DWG NO:
35001

ORIGINAL SCALE IN INCHES FOR REDUCED PLANS
0 1 2 3

CADD DWG FILE NO :F:/64305/ 64305A/M11.DWG

ORIGINAL SCALE IN INCHES FOR REDUCED PLANS
0 1 2 3

FILE DATE--OPERATOR: 02/19/99--DVB

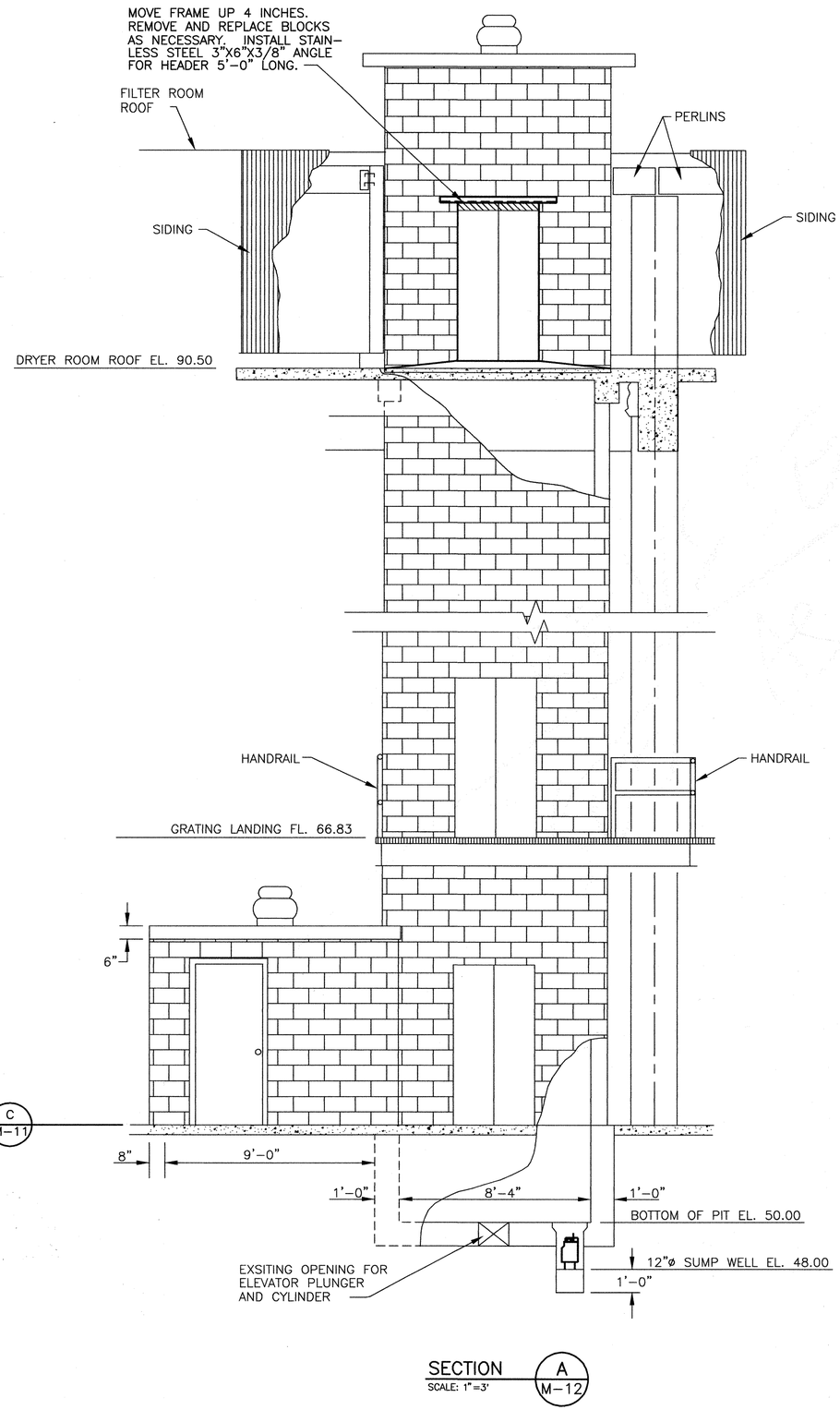

SECTION A M-12
SCALE: 1"=3'

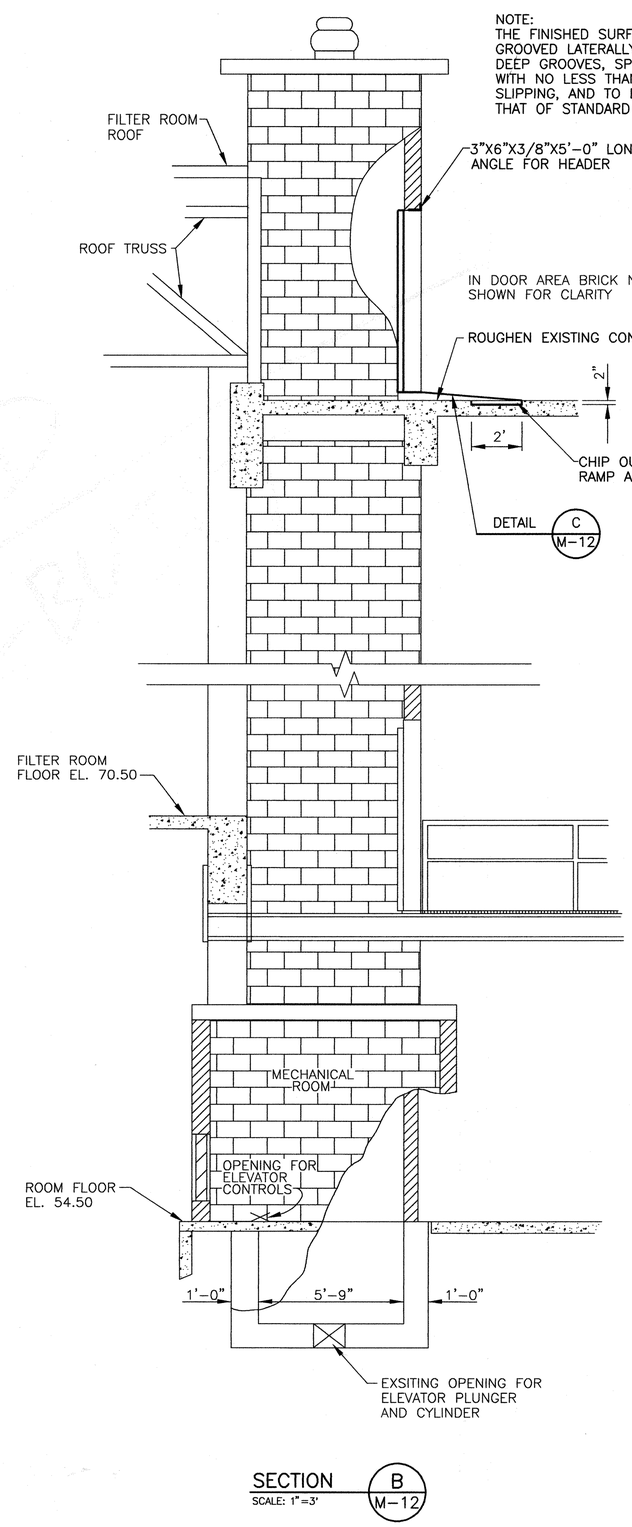

SECTION B M-12
SCALE: 1"=3'

NOTE:
THE FINISHED SURFACE OF THE RAMP IS TO BE GROOVED LATERALLY WITH 1/4" WIDE BY 1/4" DEEP GROOVES, SPACED 2-1/4", AND ROUGHENED WITH NO LESS THAN A BROOM FINISH TO PREVENT SLIPPING, AND TO DIFFERENTIATE ITS TEXTURE FROM THAT OF STANDARD SIDEWALK.

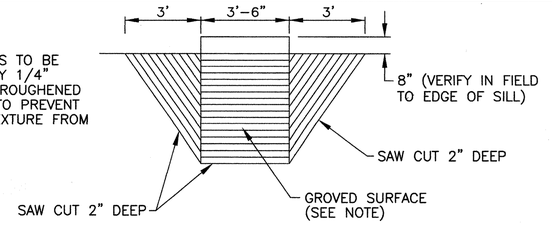

RAMP DETAIL C M-12
SCALE: 1"=3'

REV NO	DESCRIPTION	APP'D	DATE

SEAL

STATE OF TEXAS
DAVID J. ROSS
68267
REGISTERED PROFESSIONAL ENGINEER

SEAL

CH2M HILL
7600 West Tidwell Road, Suite 400
Houston Tx 77040
713.462.0161

Binkley & Barfield, Inc.
Consulting Engineers
1710 Seamist Drive Houston, Texas 77008

ALMEDA SIMS
BIOSOLIDS
DRYER REHABILITATION

GFS NO: 0298-05-3
FILE NO: 4289-4

ELEVATOR SECTIONS

CITY OF HOUSTON
DEPARTMENT OF PUBLIC WORKS AND ENGINEERING
ENGINEERING, CONSTRUCTION AND REAL ESTATE GROUP

SECTION APPROVALS

WATER ENGINEERING
TRAFFIC AND SIGNAL ENGINEERING
WASTEWATER ENGINEERING 2-25-99
STREET & BRIDGE ENGINEERING
STORMWATER ENGINEERING
CONSTRUCTION 3/2/99
2/25/99

OTHER DEPARTMENTS

PLANNING AND DEVELOPMENT
SPONSOR DEPARTMENT
CITY ENGINEER 3-2-99 DATE
DIRECTOR OF PUBLIC WORKS AND ENGINEERING 3/5/99 DATE

SUBMITTED:
SCALE: NONE
NONE
DATE:
SURVEY BY:
F B NO:

DESIGNED BY: DJR
DRAWN BY: JRR
DWG. NO. : M-12
SHT NO 126 of 159 SHTS

CITY DWG NO:
35001

CADD DWG FILE NO. :F:/64305/64305A/DETAIL.DWG
ORIGINAL SCALE IN INCHES FOR REDUCED PLANS
0 1 2 3
ORIGINAL SCALE IN INCHES FOR REDUCED PLANS

CADD DWG FILE NO :F:/64305/9847/M-21R1
FILE DATE--OPERATOR: 02/22/99 WLW

Conveyor No.	Type	Approx. Length (ft)	Inlet Elevation(ft) (See Note 6)	Discharge Elevation(ft) (See Note 6)	Motor HP	Approx. Dimensions (inches)	Comments
DC-1	Drag Chain	140.0	81.67	81.67	5.0	9 X 14 (W X D)	Dryer Room to GC-1
BEL-1	Bucket Elevator	84.0	61.08	128.33	25.0	16 x 48 (L X W)	Bottom of Silo to top of Silo
SC-4	Screw	17.0	67.79	68.82	15.0	18"X45"	Bottom of Silo 1 to DC-2
DC-2	Drag Chain	26.0	60.87	64.92	5.0	14 X 21	SC-4 to GC-2
DC-3	Drag Chain	27.0	76.20	82.86	5.0	14 X 21	GC-4 To Truck
GC-1	Gravity Chute	20.0	–	–	–	12-inch Dia.	DC-1 to Bucket Elevator
GC-2	Gravity Chute	3.0	–	–	–	12-inch Dia.	DC-2 to Bucket Elevator
GC-3	Gravity Chute	7.0	–	–	–	12-inch Dia.	Top of Bucket Elevator to Silo
GC-4	Gravity Chute	45.0	–	–	–	12-inch Dia.	Top of Bucket Elevator to DC-3 in the Loading Building

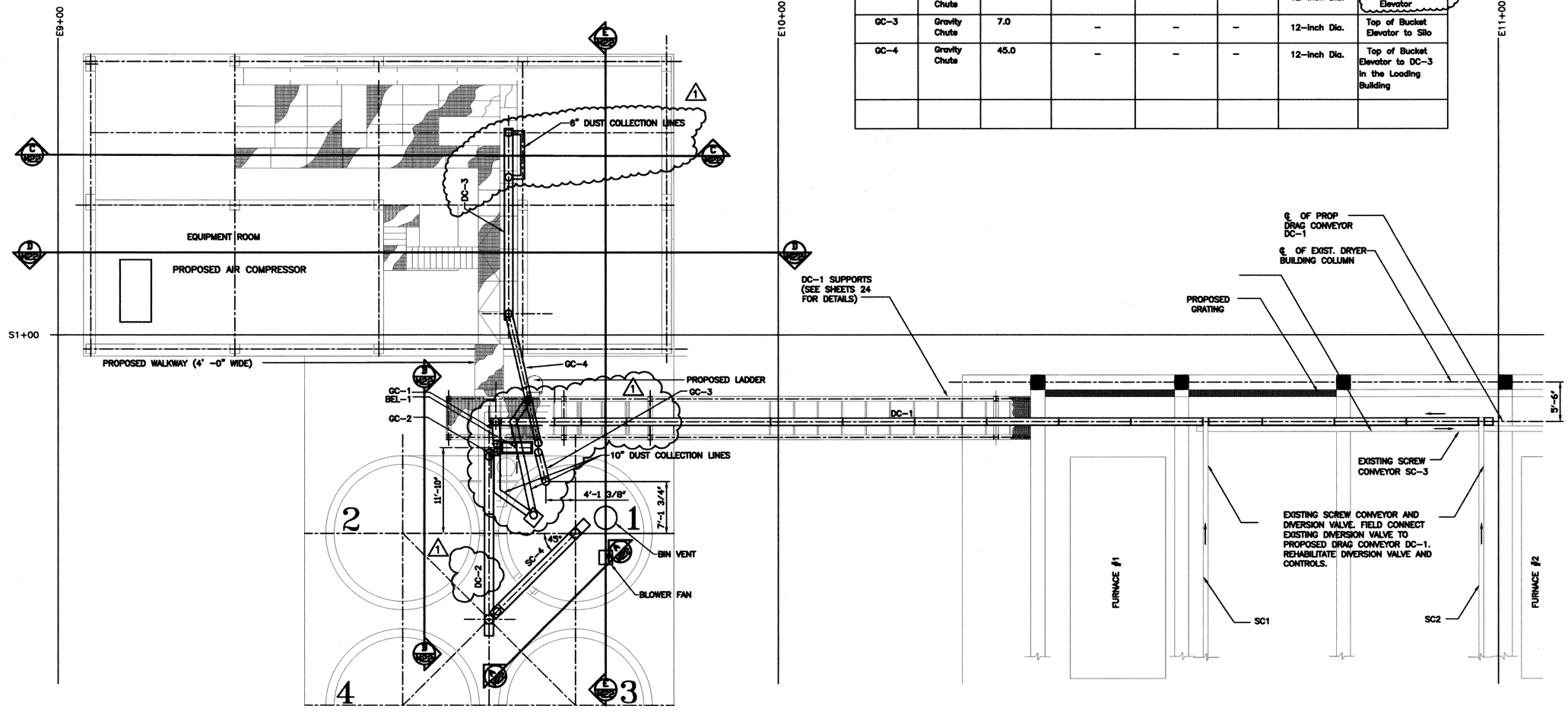

CONVEYOR LAYOUT

ABBREVIATIONS

BEL–BUCKET ELEVATOR
DC –DRAG CHAIN CONVEYOR
GC –GRAVITY CHUTE
SC –SCREW CONVEYOR

GENERAL NOTES

1. REFER TO DIVISION 14, SECTIONS 14552 AND 14553 OF THE SPECIFICATIONS FOR DRAG CHAIN CONVEYORS, SCREW CONVEYOR AND BUCKET ELEVATOR.
2. THE EXISTING SCREW CONVEYORS MUST REMAIN IN PLACE AND IN OPERATION DURING AND AFTER CONSTRUCTION.
3. ALL CONVEYOR MOTORS SHALL BE UL LISTED EXPLOSION PROOF, CLASS I, GROUP D, DIVISION 1.
4. BEL-1 MUST BE BRACED TO EXIST. SILO PLATFORM STEEL AT ELEVATIONS 70.5', 89.5', 108.5' AND 125.33' AS SHOWN ON STRUCTURAL DRAWINGS.
5. CONTRACTOR IS RESPONSIBLE FOR ALL NECESSARY CONNECTIONS BETWEEN VARIOUS CONVEYORS NOTED ON THE DRAWINGS.
6. ALL REFERENCE ELEVATIONS FOR CONVEYORS ARE TO THE TOP CENTERLINE OF THE CONVEYOR AND THE INTERSECTION OF INLET CENTERLINE OR DISCHARGE CENTERLINE WITH THE TOP OF THE CONVEYOR.

ORIGINAL SCALE IN INCHES FOR REDUCED PLANS
0 1 2 3

REV NO	DESCRIPTION	APP'D	DATE
1	AS BUILT DRAWING	DJR	12/01

SEAL
STATE OF TEXAS
DAVID J. ROSS
68267
REGISTERED PROFESSIONAL ENGINEER

SEAL
AS-BUILT

RATNALA & BAHL, INC.
Engineers • Architects • Surveyors
11767 KATY FREEWAY. SUITE 510
HOUSTON, TEXAS 77079

CH2M HILL
7600 West Tidwell Road, Suite 400
Houston Tx 77040
713.462.0161

Binkley & Barfield, Inc.
Consulting Engineers
1710 Seamist Drive Houston, Texas 77008

ALMEDA SIMS BIOSOLIDS DRYER REHABILITATION

CIP NO 0298-05-3
FILE NO: 4289-4

CONVEYOR LAYOUT PLAN

CITY OF HOUSTON
DEPARTMENT OF PUBLIC WORKS AND ENGINEERING
ENGINEERING, CONSTRUCTION AND REAL ESTATE GROUP

SECTION APPROVALS

WATER ENGINEERING
TRAFFIC AND SIGNAL ENGINEERING
WASTEWATER ENGINEERING
STREET & BRIDGE ENGINEERING
STORMWATER ENGINEERING
CONSTRUCTION

OTHER DEPARTMENTS

PLANNING AND DEVELOPMENT
SPONSOR DEPARTMENT

CITY ENGINEER — DATE
DIRECTOR OF PUBLIC WORKS AND ENGINEERING — DATE

SUBMITTED:
SCALE: 1/8"=1'-0"
DATE: 02/22/99
SURVEY BY: N/A
F B NO:

DESIGNED BY: WLW
DRAWN BY: WLW
DWG. NO. : M-21
SHT NO 127 of 159 SHTS
CITY DWG NO: 35001

CADD DWG FILE NO :F:/64305/9847-M-22
FILE DATE-OPERATOR: 02/22/99 WLW

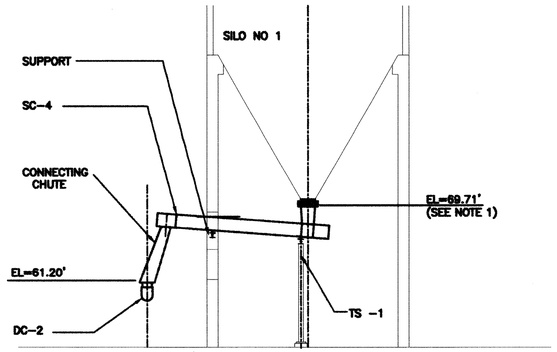

SECTION A-A

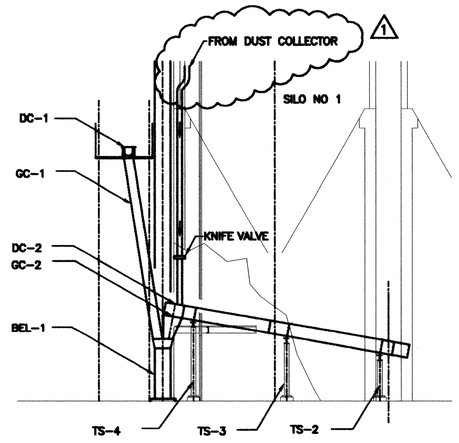

SECTION B-B

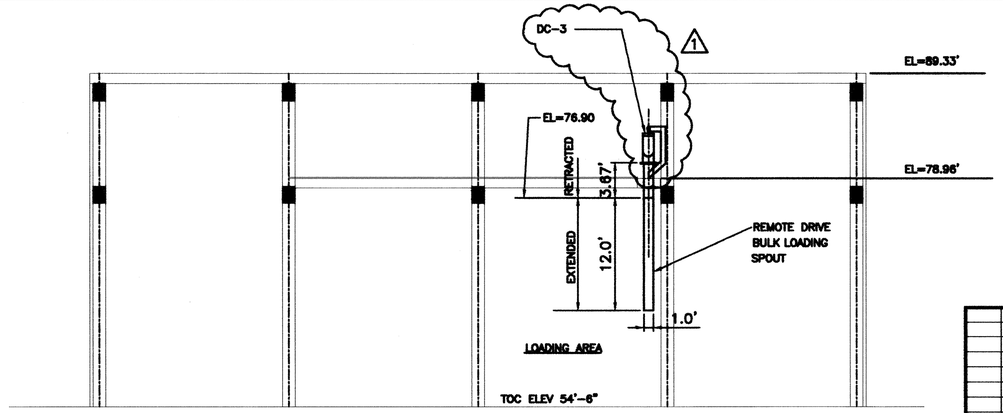

SECTION C-C

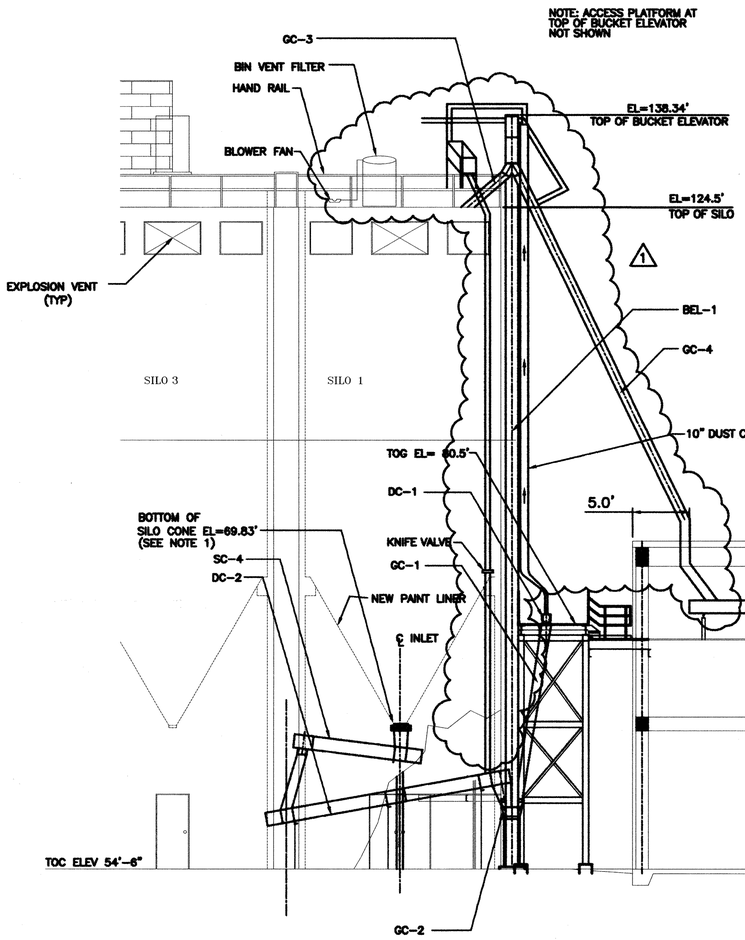

SECTION E-E

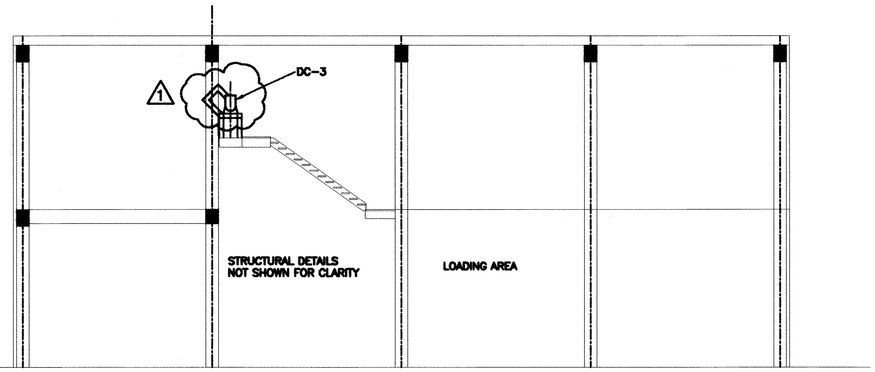

SECTION D-D

GENERAL NOTES

1. REFERENCE ELEVATION AT SILO #1 IS AT THE BOTTOM FLANGE OF KNIFE GATE VALVE.

REV NO	DESCRIPTION	APP'D	DATE
1	AS BUILT DRAWING	DJR	12/01

SEAL

STATE OF TEXAS
DAVID J. ROSS
68267
REGISTERED PROFESSIONAL ENGINEER

SEAL

AS-BUILT

RATNALA & BAHL, INC.
Engineers • Architects • Surveyors
11767 KATY FREEWAY, SUITE 510
HOUSTON, TEXAS 77079

CH2M HILL
7600 West Tidwell Road, Suite 400
Houston Tx 77040
713.462.0161

Binkley & Barfield, Inc.
Consulting Engineers
1710 Seamist Drive Houston, Texas 77008

ALMEDA SIMS BIOSOLIDS DRYER REHABILITATION

CIP NO 0298-05-3
FILE NO: 4289-4

MECHANICAL SECTIONS

CITY OF HOUSTON
DEPARTMENT OF PUBLIC WORKS AND ENGINEERING
ENGINEERING, CONSTRUCTION AND REAL ESTATE GROUP

SECTION APPROVALS

WATER ENGINEERING
TRAFFIC AND SIGNAL ENGINEERING
WASTEWATER ENGINEERING
STREET & BRIDGE ENGINEERING
STORMWATER ENGINEERING
CONSTRUCTION

OTHER DEPARTMENTS

PLANNING AND DEVELOPMENT
SPONSOR DEPARTMENT

CITY ENGINEER — DATE
DIRECTOR OF PUBLIC WORKS AND ENGINEERING — DATE

SUBMITTED:
SCALE: 1/8"=1'-0"
DATE: 02/22/99
SURVEY BY: N/A
F B NO:

DESIGNED BY: WLW
DRAWN BY: WLW
DWG. NO. : M-22
SHT NO 128 of159 SHTS
CITY DWG NO: 35001

ORIGINAL SCALE IN INCHES FOR REDUCED PLANS
0 1 2 3

CADD DWG FILE NO :F:/64305/9847/M-23R1
FILE DATE--OPERATOR: 02/22/99 WLW

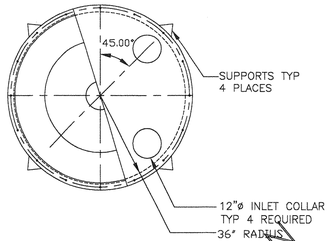

PLAN

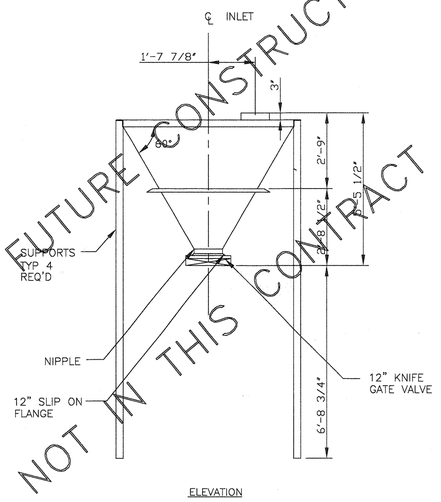

ELEVATION

HOPPER NO 1

NOTE: STEEL SUPPORTS FOR THIS HOPPER SHALL BE DESIGNED AND FURNISHED BY THE HOPPER MANUFACTURER

FUTURE CONSTRUCTION
NOT IN THIS CONTRACT

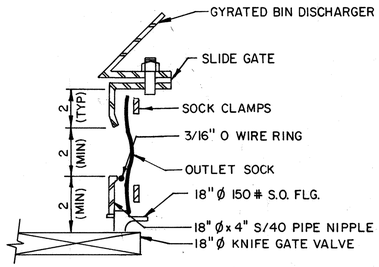

STANDARD OUTLET SOCKING DETAIL (A / M-23)

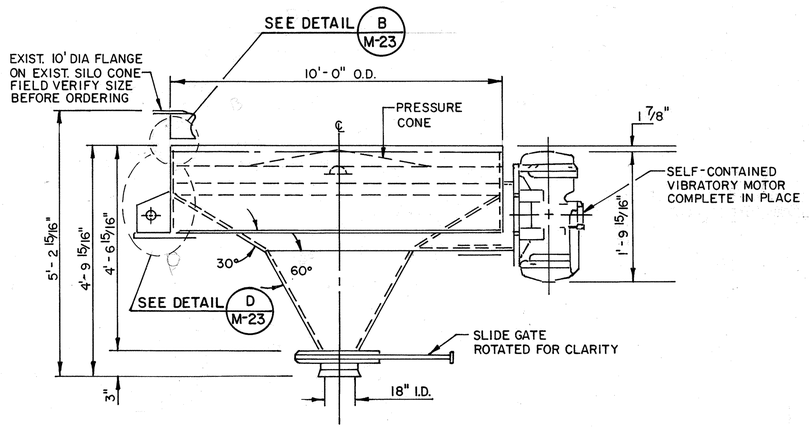

SILO NO.1 CONE MODIFICATION DETAIL (C / M-23)

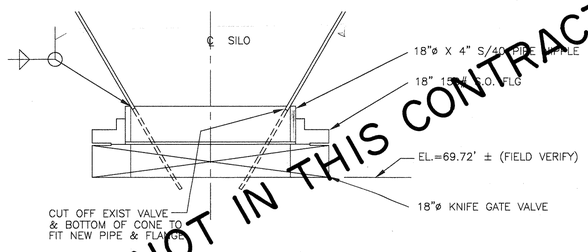

NOT IN THIS CONTRACT

SILO#1 CONE MODIFICATION DETAIL

NOTE:

1. REMOVE EXISTING VALVE AND FLANGES FROM SILO#1 CONE AND REPLACE WITH AN 18"ø KNIFE GATE VALVE AS SHOWN ON CONE MODIFICATION DETAIL.

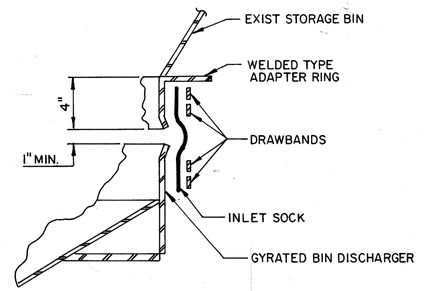

STANDARD INLET SOCKING DETAIL (B / M-23)

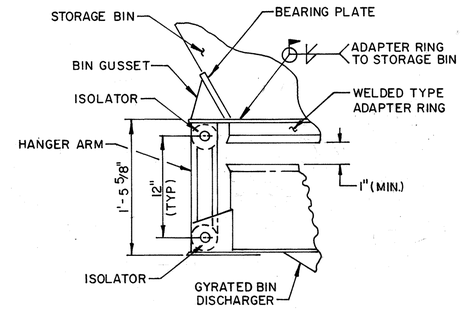

SUSPENSION ARRANGEMENT DETAIL (D / M-23)

REV NO	DESCRIPTION	APP'D	DATE

SEAL: AS-BUILT

SEAL: STATE OF TEXAS — B. R. M. RATNALA — 36055 — REGISTERED PROFESSIONAL ENGINEER — 3/24/99

RATNALA & BAHL, INC.
Engineers • Architects • Surveyors
11767 KATY FREEWAY, SUITE 510
HOUSTON, TEXAS 77079

CH2M HILL
7600 West Tidwell Road, Suite 400
Houston Tx 77040
713.462.0161

Binkley & Barfield, Inc.
Consulting Engineers
1710 Seamist Drive Houston, Texas 77008

ALMEDA SIMS
BIOSOLIDS
DRYER REHABILITATION

CIP NO 0298-05-3
FILE NO: 4289-4

MECHANICAL DETAILS

CITY OF HOUSTON
DEPARTMENT OF PUBLIC WORKS AND ENGINEERING
ENGINEERING, CONSTRUCTION AND REAL ESTATE GROUP

SECTION APPROVALS

WATER ENGINEERING — TRAFFIC AND SIGNAL ENGINEERING

WASTEWATER ENGINEERING — STREET & BRIDGE ENGINEERING

STORMWATER ENGINEERING — CONSTRUCTION

OTHER DEPARTMENTS

PLANNING AND DEVELOPMENT — SPONSOR DEPARTMENT

CITY ENGINEER — DATE 3-2-99

DIRECTOR OF PUBLIC WORKS AND ENGINEERING — DATE 3/3/99

SUBMITTED:
SCALE: 3/8"=1'-0"
DATE: 02/22/99
SURVEY BY: N/A
F B NO:

DESIGNED BY: WLW
DRAWN BY: WLW
DWG. NO. : M-23
SHT NO 129 of 159 SHTS
CITY DWG NO: 35001

ORIGINAL SCALE IN INCHES FOR REDUCED PLANS
0 1 2 3

64305A/S01.DWG
07/30/98-DVB
FILE DATE--OPERATOR:

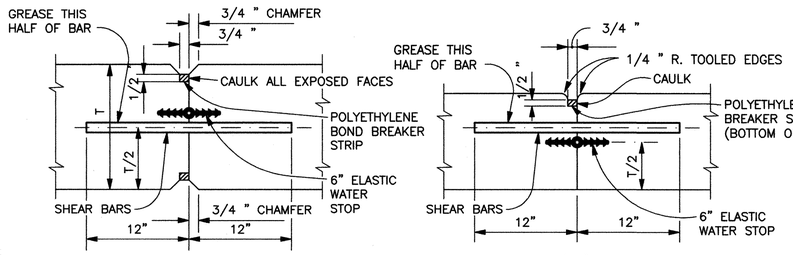

PROVIDE 3/4 " DIA. SHEAR BARS @ 18" CTRS. ACROSS JOINT.

WALLS

PROVIDE 3/4 " SHEAR BARS @ 18" CTRS. ACROSS JOINT.

SLABS

CONTRACTION JOINTS 210

SCALE: NO SCALE

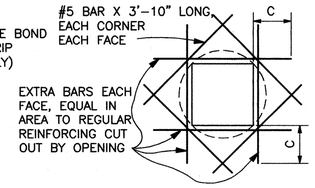

FOR SLAB THICKER THAN 7"

TYPE A – WITH ELASTIC WATER STOP
TYPE B – WITHOUT ELASTIC WATER STOP

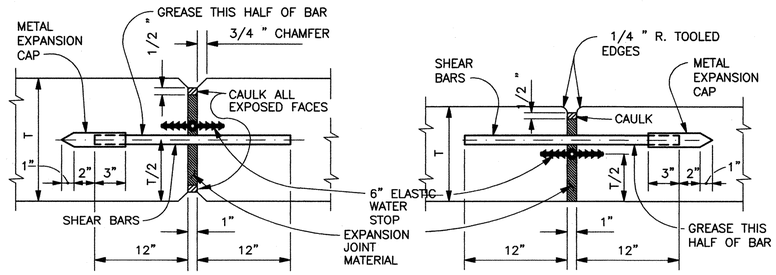

PROVIDE 3/4" DIA. SHEAR BARS @ 18" CTRS. ACROSS JOINT.

WALLS

PROVIDE 3/4" DIA. SHEAR BARS @ 18" CTRS. ACROSS JOINT.

SLABS

EXPANSION JOINTS 211

SCALE: NO SCALE

TYPE C – WITH ELASTIC WATER STOP
TYPE D – WITHOUT ELASTIC WATER STOP

NOTES: 1. REINFORCING SHALL NOT BE EXTENDED ACROSS JOINT.
2. SHEAR BARS SHALL BE SMOOTH AND FREE FROM RUST OR SCALE.

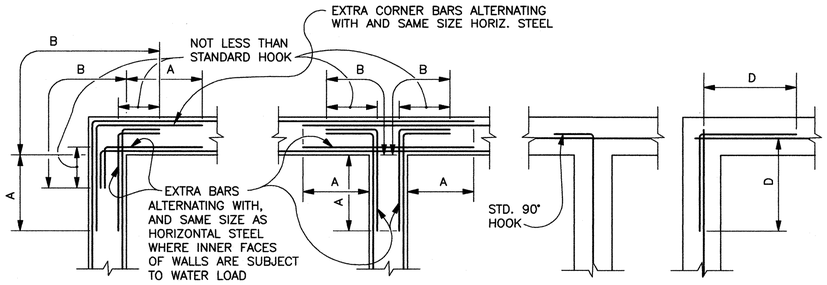

NOTE: VERTICAL REINFORCING NOT SHOWN FOR CLARITY.

A = 1/5 THE CLEAR SPAN DISTANCE MEASURED HORIZONTALLY OR VERTICALLY, WHICHEVER IS THE SMALLER, BUT IN NO CASE LESS THEN THE REQUIRED LENGTH OF LAPPED SPLICES FOR TOP BARS AS SHOWN ON THIS SHEET.

B = SUFFICIENT LENGTH TO PERMIT BARS TO EXTEND THROUGH THE WALL TO THE OPPOSITE FACE AND TERMINATE IN A STANDARD HOOK.

D = NOT LESS THAN THE LENGTH REQUIRED FOR LAPPED SPLICES FOR TOP BARS AS SHOWN ON THIS SHEET.

TYPICAL CORNER REINFORCING DETAILS 213

SCALE: NO SCALE

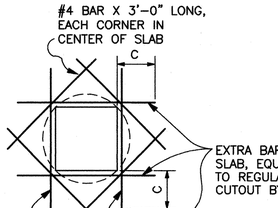

FOR SLAB 7" AND LESS IN THICKNESS

SLABS

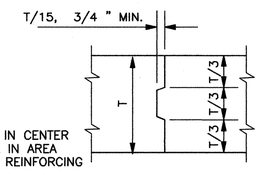

SLABS

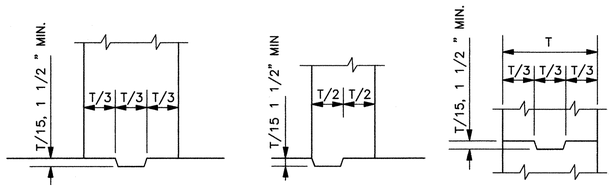

BASE OF WALLS

WALLS

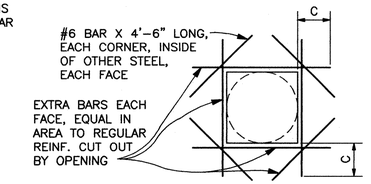

OPENINGS LARGER THAN 21" IN DIAM. OR DIAGONAL

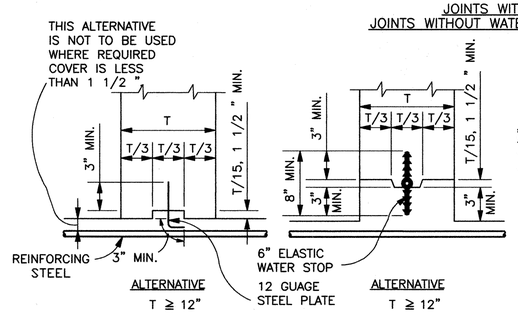

JOINTS WITHOUT WATER STOPS

JOINTS WITHOUT WATER STOPS

BASE OF WALLS

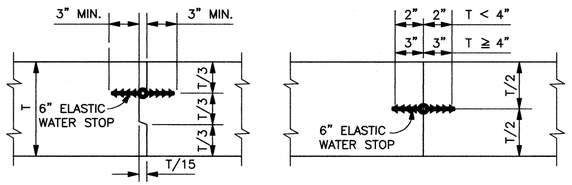

SLABS

NOTE: WHERE T IS LESS THAN 12" OMIT KEYS.

WALLS

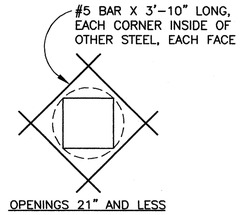

OPENINGS 21" AND LESS IN DIAM. OR DIAGONAL

WALLS

TYPICAL EXTRA REINFORCING AT OPENINGS 214

SCALE: NO SCALE

C = THE REQUIRED LENGTH FOR LAPPED SPLICE FOR TOP BARS AS SHOWN ON THIS SHEET.

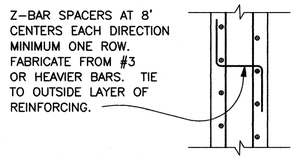

SPACERS FOR WALL REINFORCEMENT 215

SCALE: NO SCALE

WATERTIGHT JOINTS

TYPICAL CONSTRUCTION JOINTS 212

SCALE: NO SCALE

NOTE: REINFORCING STEEL IS TO BE CARRIED ACROSS ALL CONSTRUCTION JOINTS.

BAR SIZE	LENGTH OF LAPPED SPLICES FOR REINFORCING IN INCHES			
	SPLICES NOT STAGGERED		WITH STAGGERED SPLICES	
	*TOP BARS	OTHERS	*TOP BARS	OTHERS
3	20	20	15	15
4	23	20	17	15
5	30	24	24	18
6	42	30	30	24
7	50	36	38	27
8	66	47	50	36
9	83	60	64	46
10	106	76	81	58
11	130	93	100	71

* TOP BARS ARE HORIZONTAL BARS SO PLACED THAT MORE THAN 12" OF CONCRETE IS CAST IN THE MEMBER BELOW THE BAR. HORIZONTAL BARS IN WALLS ARE TO BE PROVIDED WITH LAPS AS REQUIRED FOR TOP BARS.

LENGTHS FOR LAPPED SPLICES SHALL BE NOT LESS THAN (NO MINUS TOLERANCE) SHOWN ABOVE.

LAPPED SPLICES SHALL NOT BE MADE AT POINTS OF MAX. STRESS AS DETERMINED BY THE ENGINEER AND SHALL NOT BE SPACED CLOSER THAN 6" ON CTRS. SPLICES ARE STAGGERED IF NOT MORE THAN 1/2 ARE SPLICED IN A LAP SPLICE LENGTH.

CONCRETE COVER FOR REINFORCEMENT

LOCATION	MINIMUM COVER
UNFORMED SURFACES ADJACENT TO EXCAVATION	3"
FORMED, TOP SURFACE OR UNFORMED EXPOSED TO LIQUID OR WATER CONDENSATION	3"
FORMED, OR UNFORMED SURFACE EXPOSED TO OR ABOVE SANITARY SEWAGE	3"
UNFORMED SURFACES OVER SEAL SLAB	2"
FORMED OR TOP SURFACES EXPOSED TO WEATHER OR SATURATED AIR, SUBMERGED OR IN CONTACT WITH EARTH:	
#6 OR LARGER BARS	2"
#5 OR SMALLER BARS	1 1/2 "
OTHER LOCATIONS:	
BARS IN BEAMS OR GIRDERS INCLUDING STIRRUPS	1 1/2 "
COLUMN SPIRALS OR TIES	1 1/2 "
OTHER BARS	
#7 OR LARGER	BAR DIAMETER
#6 OR SMALLER	3/4 "

COVER FOR REINFORCING STEEL SHALL NOT BE LESS THAN THE MINIMUM GIVEN ABOVE (NO MINUS TOLERANCE) AND SHALL NOT EXCEED THE MINIMUM BY MORE THAN 1/4 INCH WHERE THE CONCRETE THICKNESS IS < 24 INCHES OR MORE THAN 1/2 INCH WHERE THE CONCRETE THICKNESS IS > 24 INCHES.

GENERAL NOTES:
WHETHER SPECIFICALLY REFERENCED OR NOT, EXCEPT WHERE SPECIFICALLY SHOWN OTHERWISE, DETAILS ON THIS SHEET APPLY TO THE ENTIRE SET OF DRAWINGS.

REV NO	DESCRIPTION	APP'D	DATE

SEAL

STATE OF TEXAS
DAVID J. ROSS
68267
REGISTERED PROFESSIONAL ENGINEER

SEAL

AS-BUILT
1/25/02

CH2M HILL
7600 West Tidwell Road, Suite 400
Houston Tx 77040
713.462.0161

Binkley & Barfield, Inc.
Consulting Engineers
1710 Seamist Drive Houston, Texas 77008

ALMEDA SIMS
BIOSOLIDS
DRYER REHABILITATION

GFS NO: 0298-05-3
FILE NO: 4289-4

STANDARD REINFORCED CONCRETE DETAILS

CITY OF HOUSTON
DEPARTMENT OF PUBLIC WORKS AND ENGINEERING
ENGINEERING, CONSTRUCTION AND REAL ESTATE GROUP

SECTION APPROVALS

WATER ENGINEERING

TRAFFIC AND SIGNAL ENGINEERING

WASTEWATER ENGINEERING — 2-25-99

STREET & BRIDGE ENGINEERING

STORMWATER ENGINEERING

CONSTRUCTION — 3/2/99

2/25/99

OTHER DEPARTMENTS

PLANNING AND DEVELOPMENT

SPONSOR DEPARTMENT

CITY ENGINEER — 3-2-99 DATE

DIRECTOR OF PUBLIC WORKS AND ENGINEERING — 3/5/99 DATE

SUBMITTED:
SCALE: NONE
NONE
DATE:
SURVEY BY:
F B NO:

DESIGNED BY: DJR
DRAWN BY: DVB
DWG. NO. : S-01
SHT NO 130 of 159 SHTS

CITY DWG NO: 35001

CADD DWG FILE NO. :F:/64305/

ORIGINAL SCALE IN INCHES FOR REDUCED PLANS

0 1 2 3

ORIGINAL SCALE IN INCHES FOR REDUCED PLANS

64305A/SO2.DWG
01/21/99—RPD
FILE DATE—OPERATOR:

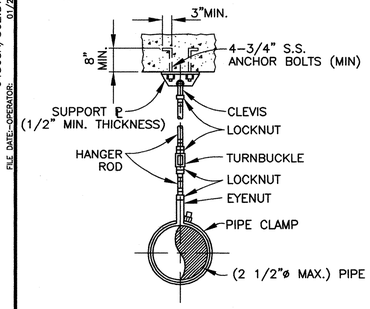

PIPE HANGER DETAILS 220

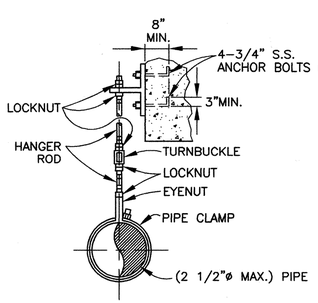

PIPE HANGER DETAILS 221

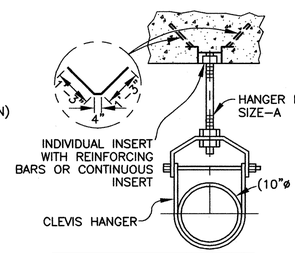

PIPE SIZE	A HANGER ROD
2"& SMALLER	3/8"
2 1/2"	1/2"
3" THRU 4"	5/8"
6" THRU 10"	3/4"
12"	7/8"

PIPE HANGER DETAILS 222

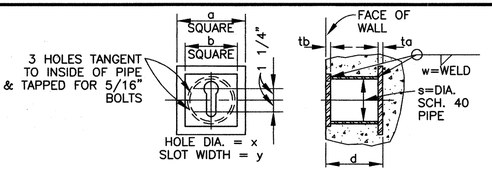

BOLT SIZE	DIMENSIONS IN INCHES									
	a	ta	b	tb	d	s	w	x	y	
3/4	7	1/2	5 1/2	3/8	5 1/2	4	1/4	1 7/16	7/8	
7/8	9	5/8	7	3/4	7 1/2	5	3/8	1 13/16	1	
1	9	5/8	7	3/4	7 1/2	5	3/8	1 13/16	1	1/8
1 1/8	11	7/8	8	3/4	9	6	3/8	2 1/4	1	1/4
1 1/4	11	7/8	8	3/4	9	6	3/8	2 1/4	1	3/8

PIPE HANGER DETAILS 223

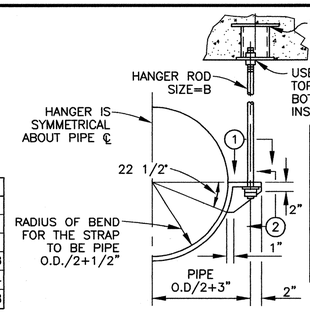

PIPE SIZE	B HANGER ROD	C STRAP SIZE
12"	3/8"	1/2" X 6"
15"–20"	3/4"	5/8" X 6"
24"–30"	3/4"	3/4" X 6"
36"	7/8"	3/4" X 8 1/2"
42"	1"	3/4" X 11"
48"	1 1/8"	7/8" X 11"

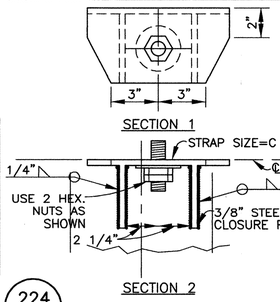

PIPE HANGER DETAILS 224

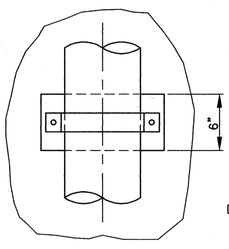

PLAN

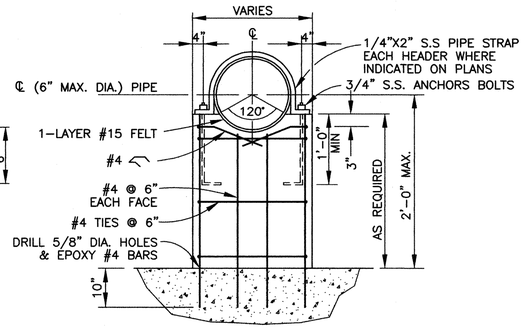

ELEVATION

PIPE SUPPORT DETAIL 225

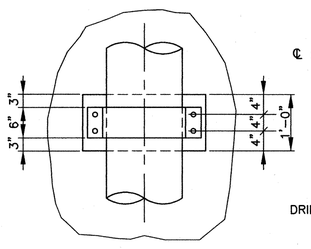

PLAN

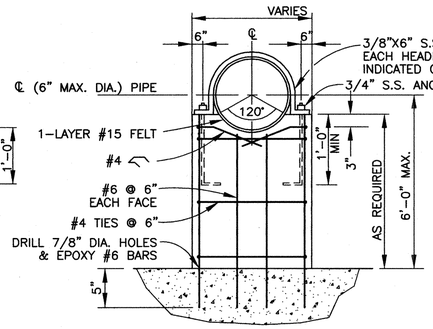

ELEVATION

PIPE SUPPORT DETAIL 226

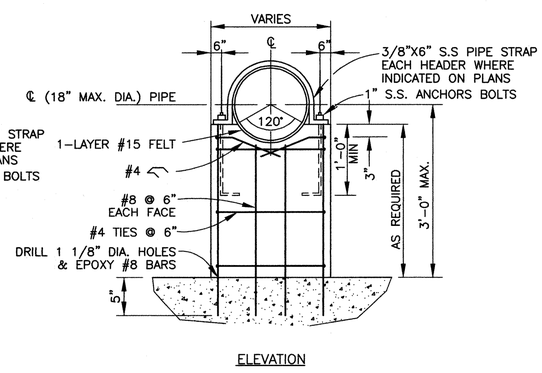

ELEVATION

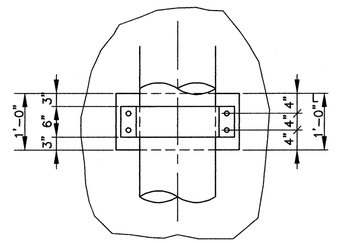

PLAN

PIPE SUPPORT DETAIL 227

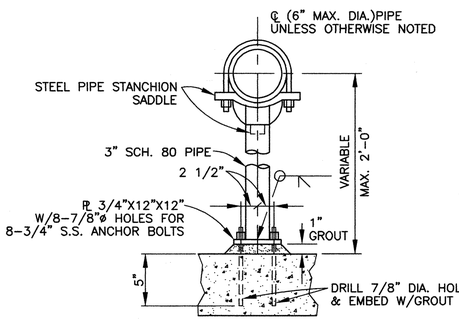

NOTE: HOT DIP GALV. AFTER FABRICATION

TYPICAL PIPE SUPPORT DETAIL 228

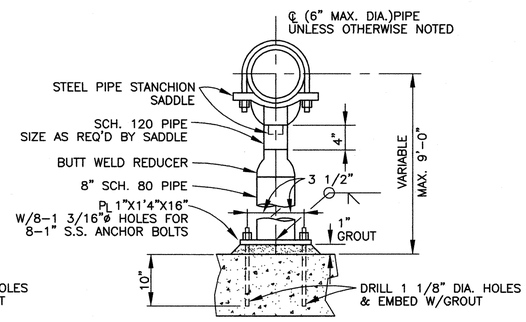

NOTE: HOT DIP GALV. AFTER FABRICATION

TYPICAL PIPE SUPPORT DETAIL 229

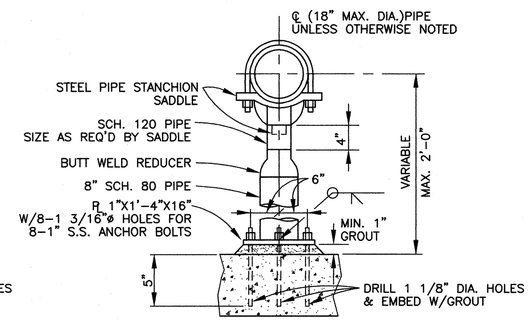

NOTE: HOT DIP GALV. AFTER FABRICATION

TYPICAL PIPE SUPPORT DETAIL 230

NOTES:

1. EXCEPT WHERE SPECIFICALLY SHOWN OTHERWISE, DETAILS ON THIS SHEET APPLY TO THE ENTIRE SET OF DRAWINGS, WHETHER SPECIFICALLY REFERENCED OR NOT.

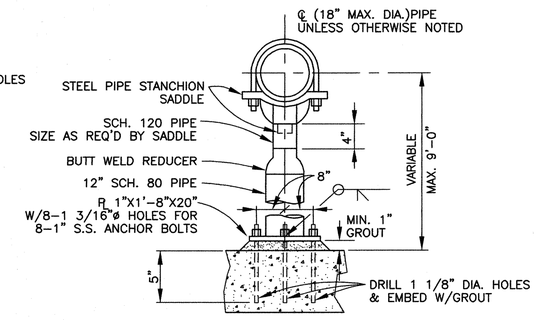

NOTE: HOT DIP GALV. AFTER FABRICATION

TYPICAL PIPE SUPPORT DETAIL 231

REV NO	DESCRIPTION	APP'D	DATE

SEAL

SEAL

AS-BUILT

CH2M HILL
7600 West Tidwell Road, Suite 400
Houston Tx 77040
713.462.0161

Binkley & Barfield, Inc.
Consulting Engineers
1710 Seamist Drive Houston, Texas 77008

ALMEDA SIMS
BIOSOLIDS
DRYER REHABILITATION

GFS NO: 0298–05–3
FILE NO: 4289–4

STANDARD PIPE SUPPORT DETAILS

CITY OF HOUSTON
DEPARTMENT OF PUBLIC WORKS AND ENGINEERING
ENGINEERING, CONSTRUCTION AND REAL ESTATE GROUP

SECTION APPROVALS

WATER ENGINEERING

TRAFFIC AND SIGNAL ENGINEERING

WASTEWATER ENGINEERING — 2-25-99

STREET & BRIDGE ENGINEERING

STORMWATER ENGINEERING

CONSTRUCTION — 3/1/99

2/25/99

OTHER DEPARTMENTS

PLANNING AND DEVELOPMENT

SPONSOR DEPARTMENT

CITY ENGINEER — 3-2-99 DATE

DIRECTOR OF PUBLIC WORKS AND ENGINEERING — 3/5/99 DATE

SUBMITTED:
SCALE: NONE
NONE
DATE:
SURVEY BY:
F B NO:

DESIGNED BY: DJR
DRAWN BY: DVB
DWG. NO. : S–02
SHT NO 131 of 159 SHTS

CITY DWG NO: 35001

CADD DWG FILE NO :F:/64305/
ORIGINAL SCALE IN INCHES FOR REDUCED PLANS
0 1 2 3

64305A/S03.DWG
FILE DATE--OPERATOR: 02/21/99-DVB

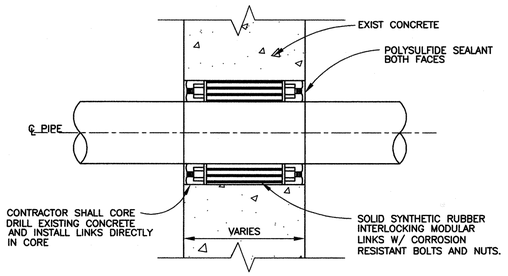

CONCRETE WALL PENETRATION 240
SCALE: NONE

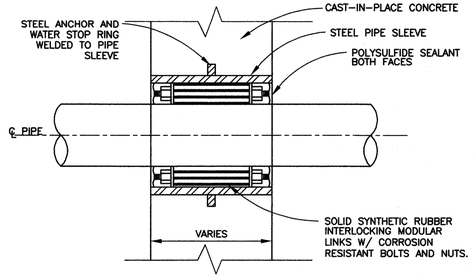

CONCRETE WALL PENETRATION 241
SCALE: NONE

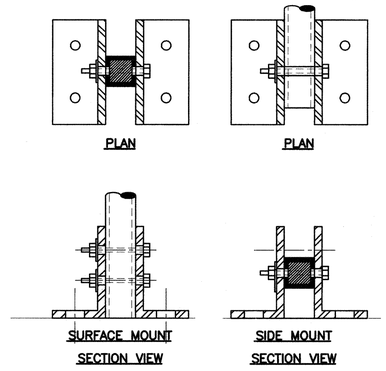

TYP HANDRAIL SUPPORT DETAIL 242 M-09

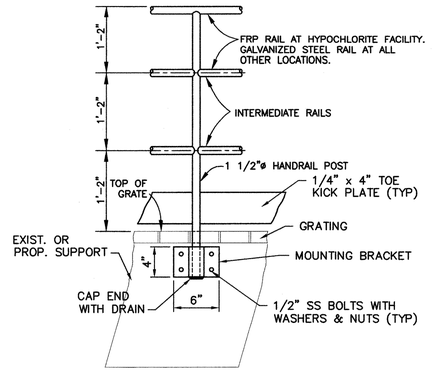

FRONT VIEW

NOTES:

1. EXCEPT WHERE SPECIFICALLY SHOWN OTHERWISE, DETAILS ON THIS SHEET APPLY TO THE ENTIRE SET OF DRAWINGS, WHETHER SPECIFICALLY REFERENCED OR NOT.

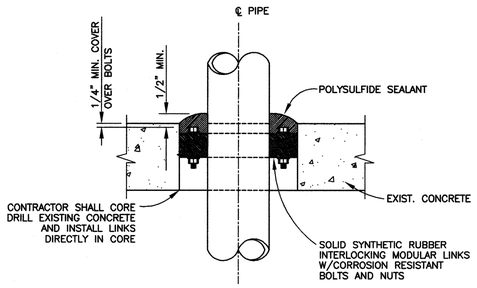

SLEEVE DETAIL 243
SCALE: NONE

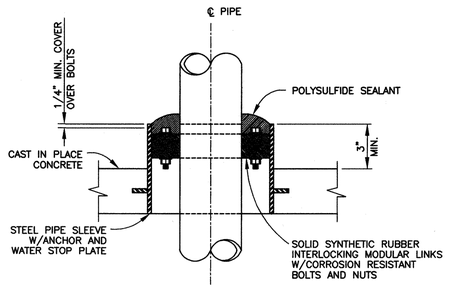

SLEEVE DETAIL 244
SCALE: NONE

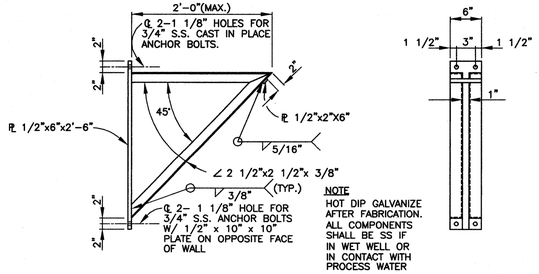

WALL BRACKET DETAIL 245
SCALE: NONE

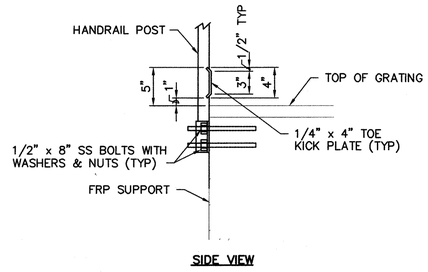

SIDE VIEW

TYP HANDRAIL SUPPORT DETAIL 246 M-09
SCALE: 1 1/2" = 1'-0"

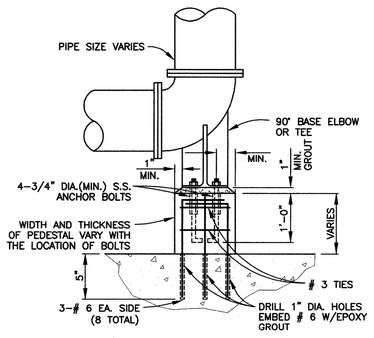

PIPE SUPPORT DETAIL 247
SCALE: NONE

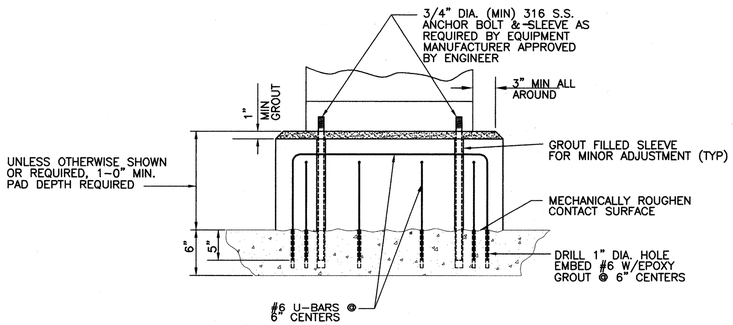

TYPICAL EQUIPMENT BASE DETAIL 248
SCALE: NONE

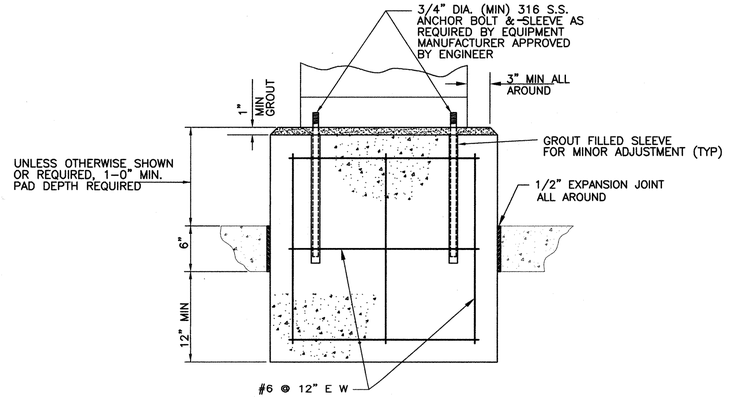

EQUIPMENT PAD DETAIL 249
SCALE: NONE

REV NO	DESCRIPTION	APP'D	DATE

SEAL
STATE OF TEXAS
DAVID J. ROSS
68267
REGISTERED PROFESSIONAL ENGINEER

SEAL
AS-BUILT

CH2M HILL
7600 West Tidwell Road, Suite 400
Houston Tx 77040
713.462.0161

Binkley & Barfield, Inc.
Consulting Engineers
1710 Seamist Drive Houston, Texas 77008

ALMEDA SIMS
BIOSOLIDS
DRYER REHABILITATION

GFS NO: 0298-05-3
FILE NO: 4289-4

MISCELLANEOUS STANDARD DETAILS

CITY OF HOUSTON
DEPARTMENT OF PUBLIC WORKS AND ENGINEERING
ENGINEERING, CONSTRUCTION AND REAL ESTATE GROUP

SECTION APPROVALS

WATER ENGINEERING
TRAFFIC AND SIGNAL ENGINEERING
WASTEWATER ENGINEERING — 2-25-99
STREET & BRIDGE ENGINEERING
STORMWATER ENGINEERING
CONSTRUCTION — 3/2/99
2/26/99

OTHER DEPARTMENTS

PLANNING AND DEVELOPMENT
SPONSOR DEPARTMENT

CITY ENGINEER — DATE 3-2-99
DIRECTOR OF PUBLIC WORKS AND ENGINEERING — DATE 3/5/99

SUBMITTED:
SCALE: NONE
NONE
DATE:
SURVEY BY:
F B NO:

DESIGNED BY: DJR
DRAWN BY: DVB
DWG. NO. : S-03
SHT NO 132 of 159 SHTS
CITY DWG NO: 35001

CADD DWG FILE NO :F:/64305/
ORIGINAL SCALE IN INCHES FOR REDUCED PLANS
0 1 2 3
ORIGINAL SCALE IN INCHES FOR REDUCED PLANS

FILE DATE--/OPERATOR: 02/21/99--DVB

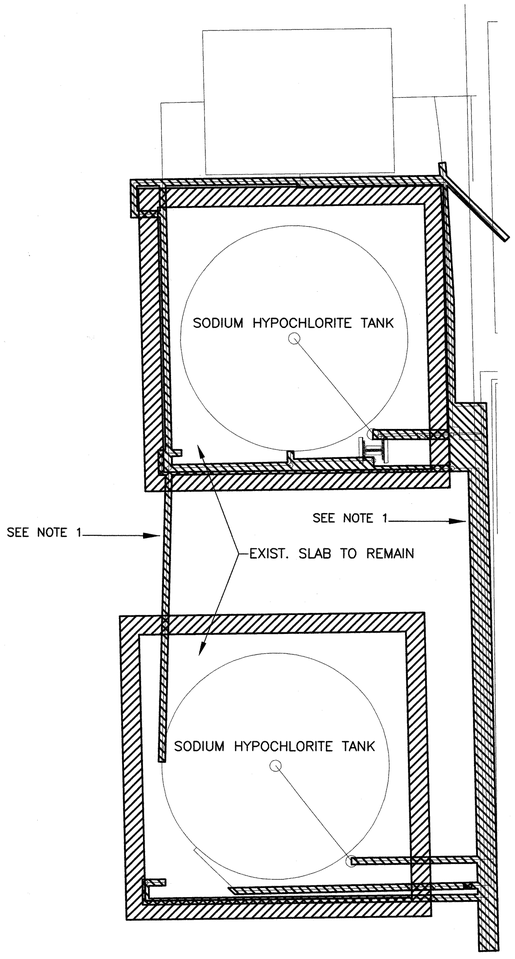

NOTE: EXISTING SODIUM HYPOCHLORITE TANKS TO REMAIN IN OPERATION DURING CONSTRUCTION PHASE.

DEMOLITON PLAN — A
SCALE: 1"=4'

DEMOLITION LEGEND

- REMOVE EXIST. WALL TO TOP OF SLAB
- REMOVE, REPLACE AND REROUTE EXIST. PIPING AS NECESSARY

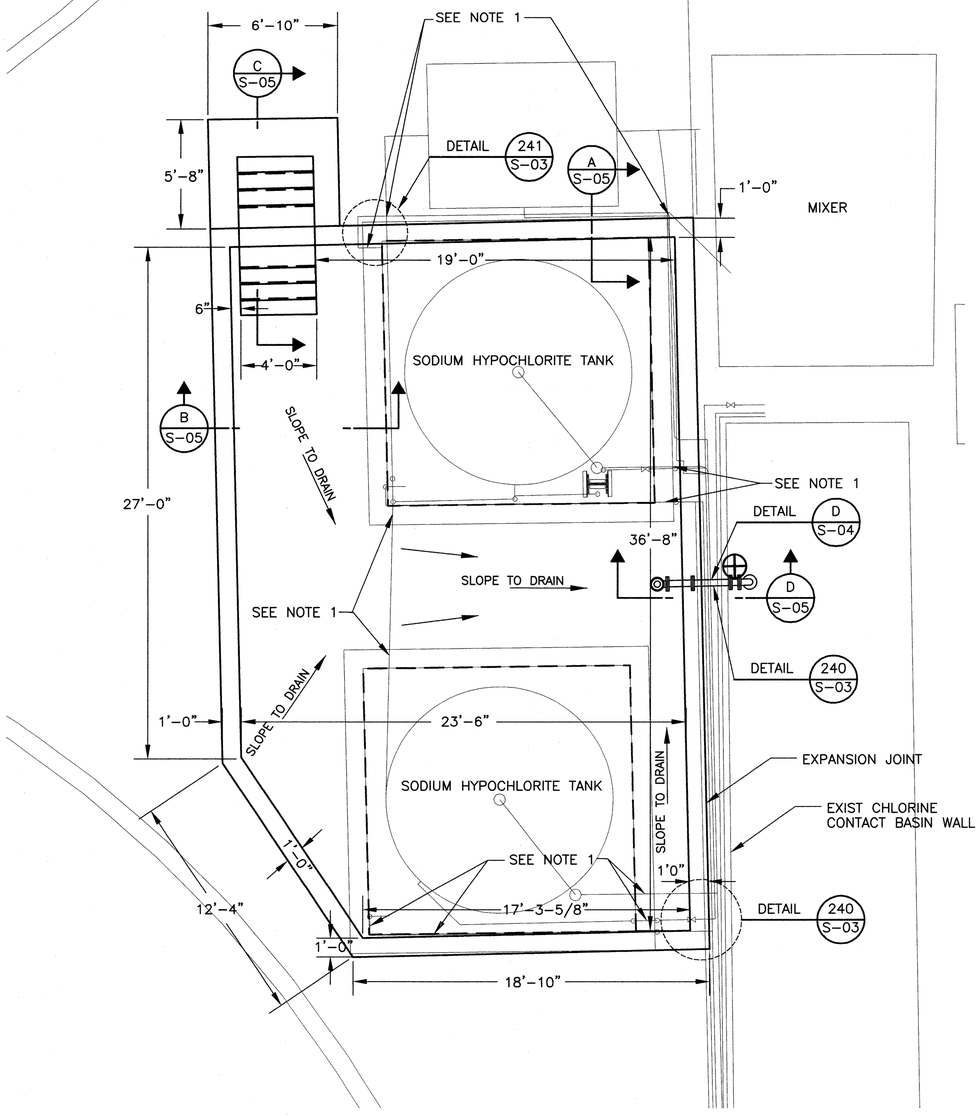

PLAN — B
SCALE: 1"=4'

NOTES:

1. PROVIDE NEW SCH 80 PVC OR 1" GALVANIZED PIPING TO MATCH EXISTING WHERE PIPING IS RELOCATED TO FACILITATE CONSTRUCTION.

REV NO	DESCRIPTION	APP'D	DATE

SEAL — DAVID J. ROSS, 68267, REGISTERED PROFESSIONAL ENGINEER, STATE OF TEXAS — 3/1/99

SEAL — AS-BUILT

CH2M HILL
7600 West Tidwell Road, Suite 400
Houston Tx 77040
713.462.0161

Binkley & Barfield, Inc.
Consulting Engineers
1710 Seamist Drive Houston, Texas 77008

ALMEDA SIMS BIOSOLIDS DRYER REHABILITATION

GFS NO: 0298-05-3
FILE NO: 4289-4

SODIUM HYPOCHLORITE TANKS REHABILITATION

CITY OF HOUSTON
DEPARTMENT OF PUBLIC WORKS AND ENGINEERING
ENGINEERING, CONSTRUCTION AND REAL ESTATE GROUP

SECTION APPROVALS

WATER ENGINEERING
TRAFFIC AND SIGNAL ENGINEERING
WASTEWATER ENGINEERING — 2-25-99
STREET & BRIDGE ENGINEERING
STORMWATER ENGINEERING
CONSTRUCTION — 3/2/99
2/25/99

OTHER DEPARTMENTS

PLANNING AND DEVELOPMENT
SPONSOR DEPARTMENT

CITY ENGINEER — 3-2-99 DATE
DIRECTOR OF PUBLIC WORKS AND ENGINEERING — 3/5/99 DATE

SUBMITTED:
SCALE: 1"=4'
DATE:
SURVEY BY:
F B NO:

DESIGNED BY: DJR
DRAWN BY: DVB
DWG. NO. : S-04
SHT NO 133 of 159 SHTS

CITY DWG NO: 35001

CADD DWG FILE NO :F:/64305/64305A/S04.DWG

ORIGINAL SCALE IN INCHES FOR REDUCED PLANS
0 1 2 3

FILE DATE--OPERATOR: 02/21/99--DVB

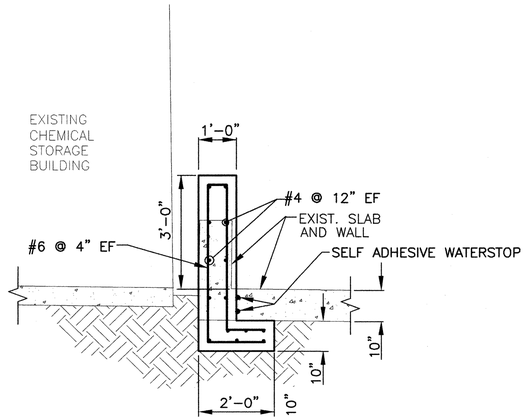

SECTION A
SCALE: 1"=2'
S-04

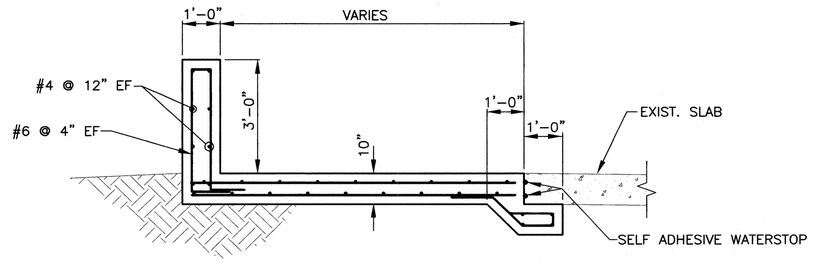

SECTION B
SCALE: 1"=2'
S-04

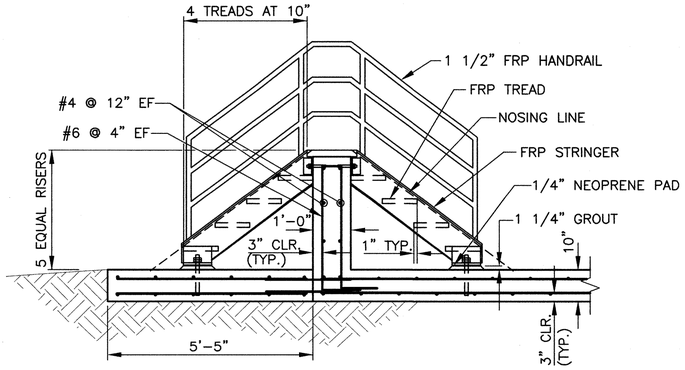

SECTION C
SCALE: 1"=2'
S-04

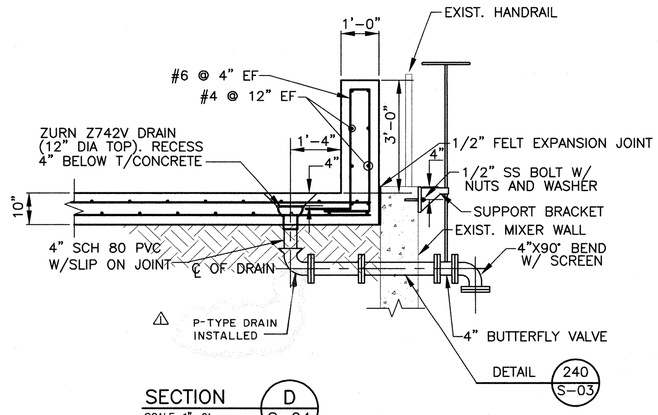

SECTION D
SCALE: 1"=2'
S-04

REV NO	DESCRIPTION	APP'D	DATE
1	AS BUILT	DJR	1-02

SEAL

STATE OF TEXAS
DAVID J. ROSS
68267
REGISTERED
PROFESSIONAL ENGINEER
1/9/99

SEAL

AS-BUILT

CH2M HILL
7600 West Tidwell Road, Suite 400
Houston Tx 77040
713.462.0161

Binkley & Barfield, Inc.
Consulting Engineers
1710 Seamist Drive Houston, Texas 77008

ALMEDA SIMS
BIOSOLIDS
DRYER REHABILITATION

GFS NO: 0298-05-3
FILE NO: 4289-4

CONTAINMENT WALL AND PAVING SECTIONS AND DETAILS

CITY OF HOUSTON
DEPARTMENT OF PUBLIC WORKS AND ENGINEERING
ENGINEERING, CONSTRUCTION AND REAL ESTATE GROUP

SECTION APPROVALS

WATER ENGINEERING

TRAFFIC AND SIGNAL ENGINEERING

WASTEWATER ENGINEERING 2-25-99

STREET & BRIDGE ENGINEERING

STORMWATER ENGINEERING

CONSTRUCTION 3/2/99

3/5/1999

OTHER DEPARTMENTS

PLANNING AND DEVELOPMENT

SPONSOR DEPARTMENT

CITY ENGINEER 3-2-99
DATE

DIRECTOR OF PUBLIC WORKS AND ENGINEERING 3/5/99
DATE

SUBMITTED:
SCALE: 1"=2'
DATE:
SURVEY BY:
F B NO:

DESIGNED BY: DJR
DRAWN BY: DVB
DWG. NO. : S-05
SHT NO 134 of 159 SHTS

CITY DWG NO:
35001

CADD DWG FILE NO :F:/64305/64305A/S05.DWG

ORIGINAL SCALE IN INCHES
FOR REDUCED PLANS
0 1 2 3

FILE DATE--OPERATOR: 02/19/99--RPD

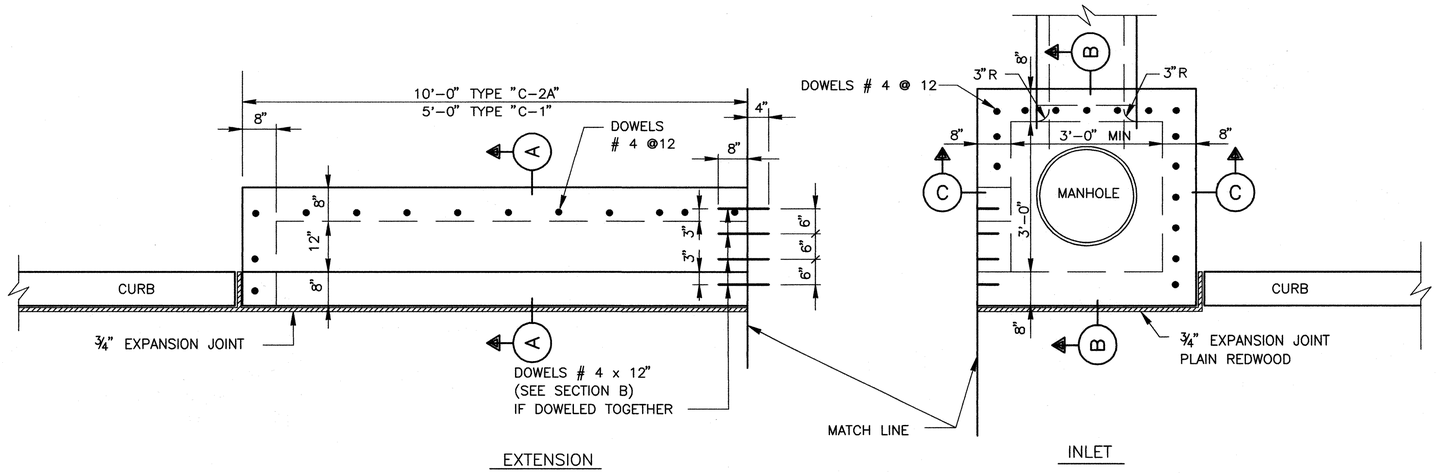

PLAN

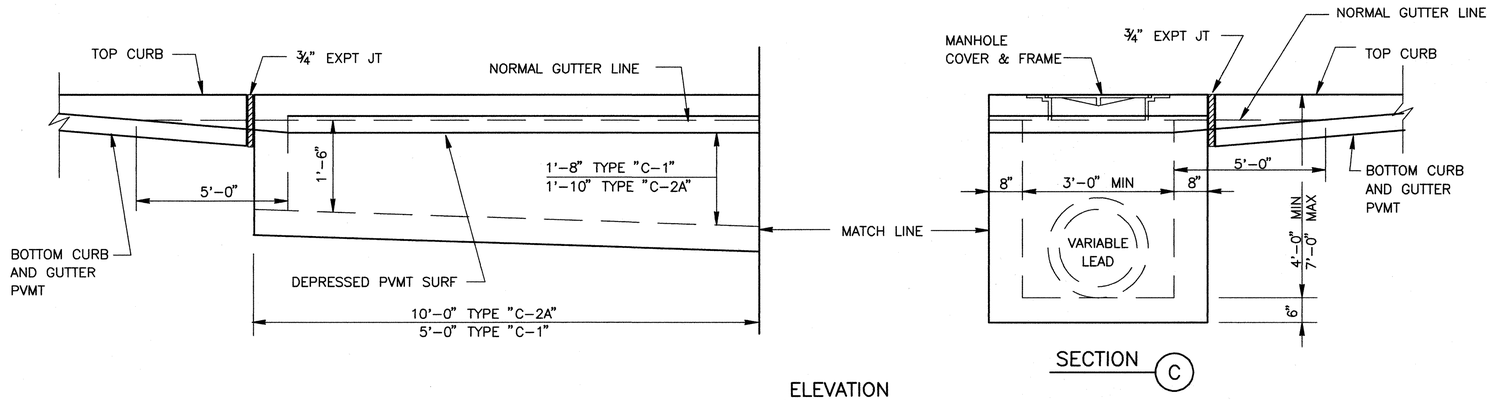

ELEVATION

SECTION C

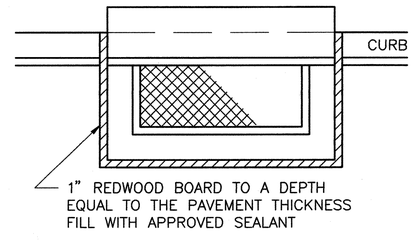

PLAN VIEW – CURB INLET

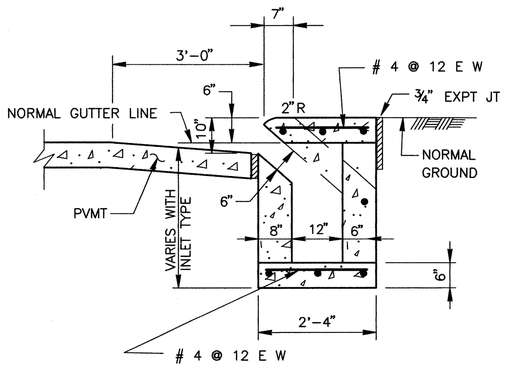

SECTION A

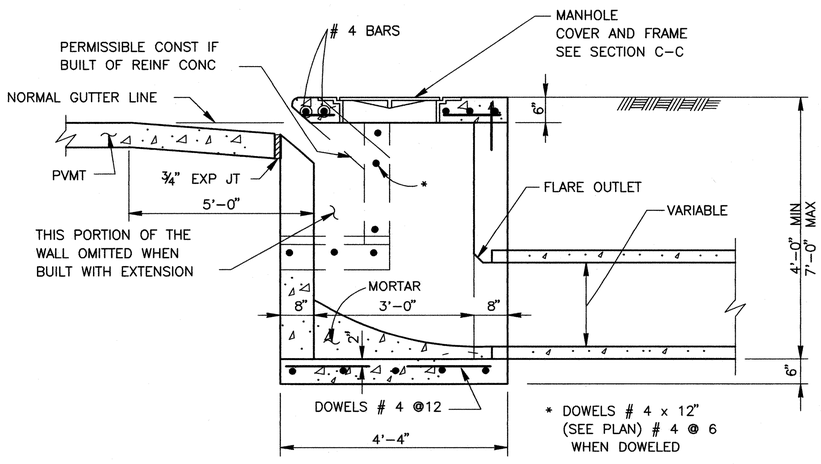

SECTION B

NOTES:

1. FOR TYPE "C-2A" INLETS PROVIDE A CENTER 6"X6" COLUMNS IN THE CURB LINE BETWEEN ALL EXTENSIONS.
2. WALLS TO BE 6" IF BUILT WITH REINFORCED CONCRETE. WHEN BUILT WITH BRICK WALL, USE STRAIGHT WALL IN BACK WITH 6" REINFORCED CONCRETE TOP SLABS DOWELLED INTO BRICK WALLS WITH # 4 X 8" @ 12.

GENERAL NOTES:

TYPE "C" INLET WITH NO EXTENSION

TYPE "C-1" INLET WITH ONE EXTENSION (5'-0" LONG)

TYPE "C-2" INLET WITH ONE EXTENSION ON EACH SIDE

TYPE "C-2A" INLET WITH DOUBLE EXTENSION (10'-0" LONG)

REV NO	DESCRIPTION	APP'D	DATE

SEAL

STATE OF TEXAS
DAVID J. ROSS
68267
REGISTERED
PROFESSIONAL ENGINEER

SEAL

AS-BUILT

CH2M HILL
7600 West Tidwell Road, Suite 400
Houston Tx 77040
713.462.0161

Binkley & Barfield, Inc.
Consulting Engineers
1710 Seamist Drive Houston, Texas 77008

ALMEDA SIMS
BIOSOLIDS
DRYER REHABILITATION

GFS NO: 0298-05-3
FILE NO: 4289-4

STORM SEWER
TYPE "C", "C-1", "C-2"
AND "C-2A" INLETS

CITY OF HOUSTON

DEPARTMENT OF PUBLIC WORKS AND ENGINEERING
ENGINEERING, CONSTRUCTION AND REAL ESTATE GROUP

SECTION APPROVALS

WATER ENGINEERING

TRAFFIC AND SIGNAL ENGINEERING

WASTEWATER ENGINEERING — 12-25-99

STREET & BRIDGE ENGINEERING

STORMWATER ENGINEERING

CONSTRUCTION — 3/2/99

3/25/99

OTHER DEPARTMENTS

PLANNING AND DEVELOPMENT

SPONSOR DEPARTMENT

CITY ENGINEER — 3-2-99 DATE

DIRECTOR OF PUBLIC WORKS AND ENGINEERING — 3/5/99 DATE

SUBMITTED:
SCALE: NO SCALE
DATE:
SURVEY BY:
F B NO:

DESIGNED BY: DJR
DRAWN BY: RPD
DWG. NO. : S-06
SHT NO 135 of 159 SHTS

CITY DWG NO:
35001

CADD DWG FILE NO :F:/64305/64305A/S06.DWG

ORIGINAL SCALE IN INCHES FOR REDUCED PLANS

0 1 2 3

FILE DATE:-OPERATOR: 04/07/99-LTG

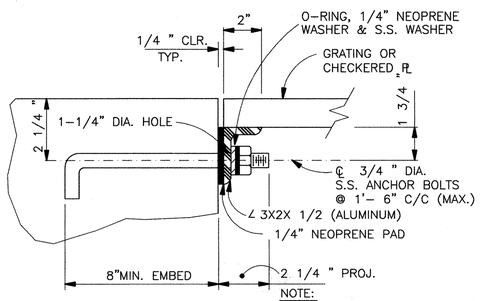

LEDGER ANGLE DETAIL — 250

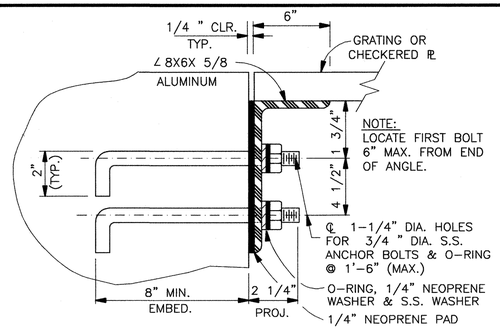

LEDGER HEAVY ANGLE DETAIL — 251

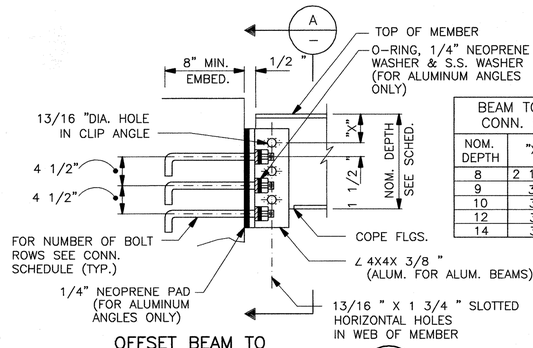

BEAM TO CONCRETE CONN. SCHEDULE		
NOM. DEPTH	"X"	NUMBER OF BOLT ROWS
8	2 1/2"	2
9	3"	2
10	3"	2
12	3"	3
14	3"	3

OFFSET BEAM TO CONCRETE CONNECTION — 252

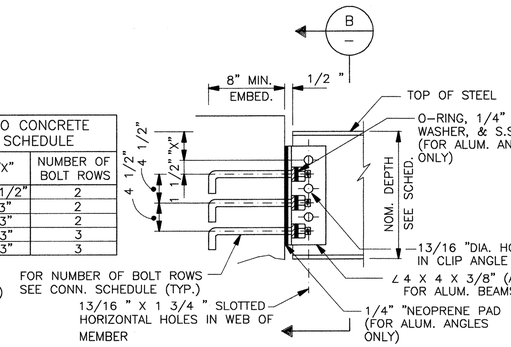

BEAM TO CONCRETE CONNECTION — 253

NOTES:

1. EXCEPT WHERE SPECIFICALLY SHOWN OTHERWISE. DETAILS ON THIS SHEET APPLY TO THE ENTIRE SET OF DRAWINGS, WHETHER SPECIFICALLY REFERENCED OR NOT.
2. USE 3/4" DIA. S.S. ANCHORS EPOXY/VINYL ESTER SET FOR EXISTING CONCRETE.
3. WHEN ALUMINUM BEAMS OR GRATING IS NOT USED, OMIT NEOPRENE PADS, WASHERS, AND O-RINGS FROM DETAILS ON THIS PAGE

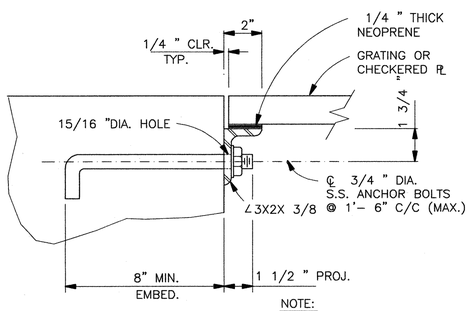

LEDGER ANGLE W/NEOPRENE DETAIL — 254

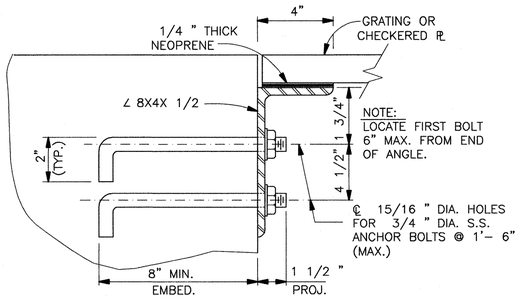

HEAVY LEDGER ANGLE W/NEOPRENE DETAIL — 255

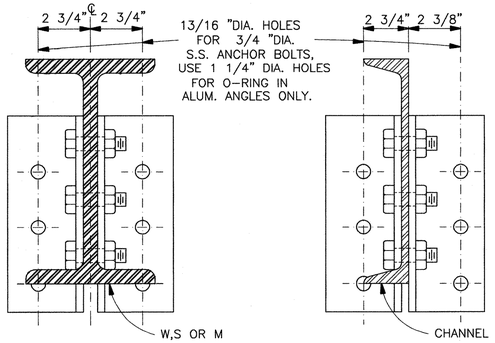

SECTION — A

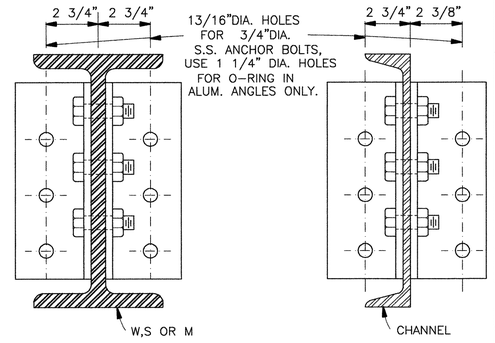

SECTION — B

REV NO	DESCRIPTION	APP'D	DATE
1	ADDENDUM #3; ISSUE THIS DWG.		

SEAL

DAVID J. ROSS 68267 REGISTERED PROFESSIONAL ENGINEER

SEAL

AS-BUILT

CH2M HILL
7600 West Tidwell Road, Suite 400
Houston Tx 77040
713.462.0161

Binkley & Barfield, Inc.
Consulting Engineers
1710 Seamist Drive Houston, Texas 77008

ALMEDA SIMS
BIOSOLIDS
DRYER REHABILITATION

GFS NO: 0298-05-3
FILE NO: 4289-4

STANDARD STRUCTURAL DETAILS

CITY OF HOUSTON
DEPARTMENT OF PUBLIC WORKS AND ENGINEERING
ENGINEERING, CONSTRUCTION AND REAL ESTATE GROUP

SECTION APPROVALS

WATER ENGINEERING
TRAFFIC AND SIGNAL ENGINEERING
WASTEWATER ENGINEERING
STREET & BRIDGE ENGINEERING
STORMWATER ENGINEERING
CONSTRUCTION

OTHER DEPARTMENTS

PLANNING AND DEVELOPMENT
SPONSOR DEPARTMENT

CITY ENGINEER — DATE

DIRECTOR OF PUBLIC WORKS AND ENGINEERING — DATE

SUBMITTED:
SCALE: NONE
DATE: 2/22/99
SURVEY BY:
F B NO:

DESIGNED BY: DJR
DRAWN BY: AAA
DWG. NO. : S-07
SHT NO135A of 159 SHTS
CITY DWG NO: 35001

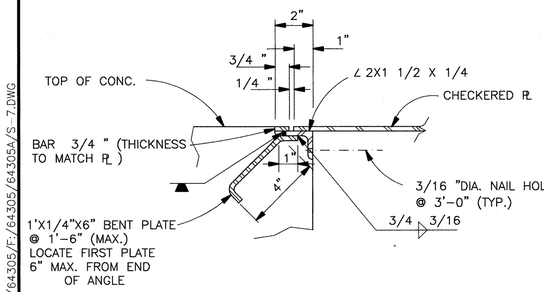

CURB ANGLE DETAIL — 256

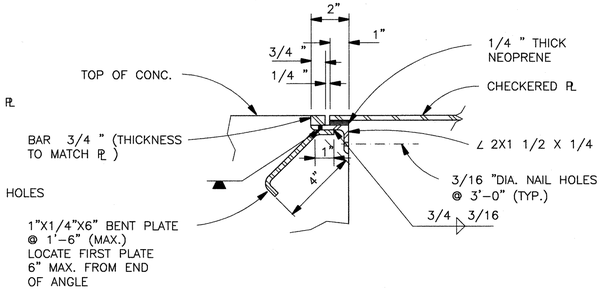

CURB ANGLE W/NEOPRENE DETAIL — 257

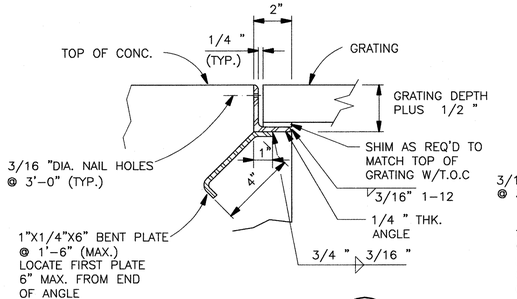

CURB ANGLE DETAIL — 258

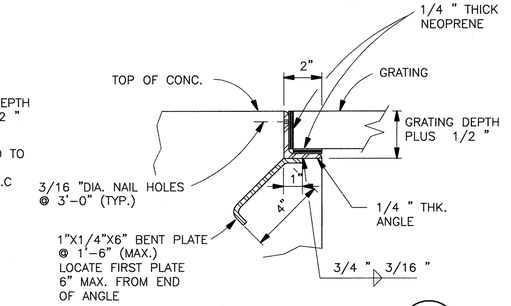

CURB ANGLE W/NEOPRENE DETAIL — 259

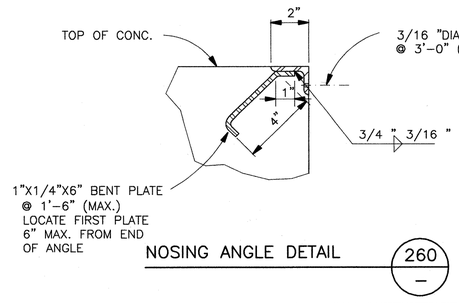

NOSING ANGLE DETAIL — 260

ADDENDUM NO. 3

CADD DWG FILE NO. :F:/64305/F/64305/64305A/S- 7.DWG
ORIGINAL SCALE IN INCHES FOR REDUCED PLANS
0 1 2 3

CADD DWG FILE NO :F:/64305/9847-S-21R1
FILE DATE:-OPERATOR: 02/22/99 WLW

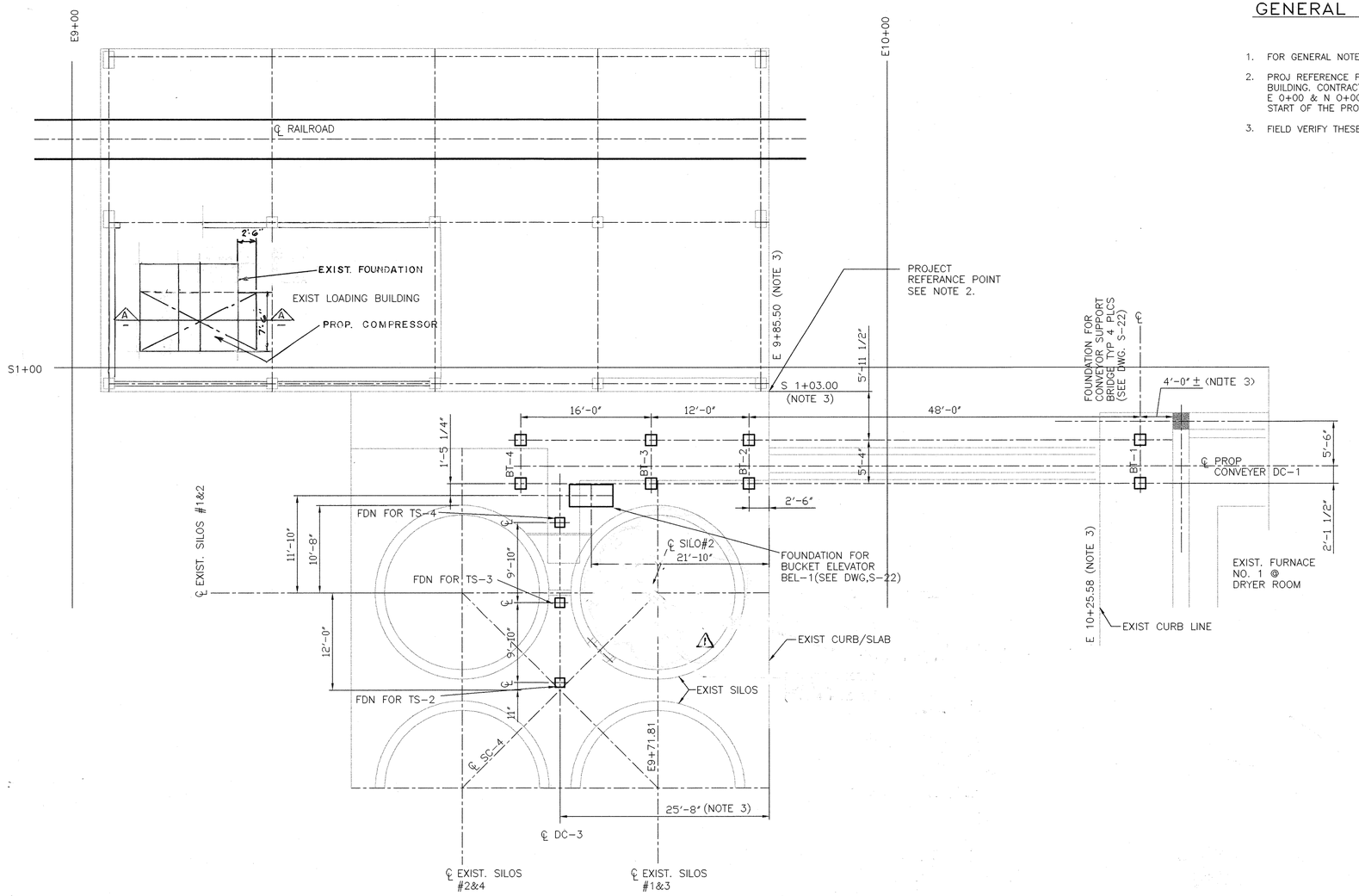

FOUNDATION LOCATION PLAN
SCALE 1/8"=1'-0"

GENERAL NOTES

1. FOR GENERAL NOTES SEE DWG. S-28.
2. PROJ REFERENCE POINT IS AT THE SOUTHEAST SLAB CORNER OF THE EXISTING LOADING BUILDING. CONTRACTOR SHALL VERIFY ITS COORDINATES WITH THE PLANT BENCHMARK AT E 0+00 & N 0+00 AND SHALL NOTIFY ANY DIFFERANCE TO THE ENGINEER PRIOR TO START OF THE PROJECT.
3. FIELD VERIFY THESE DIMENSIONS.

REMOVE EXIST CONCRETE COMPRESSOR PADS TO A MIN. OF 2" BELOW FINISH FLOOR AND POUR NEW TOPPING FLUSH WITH FINISH FLOOR. EXISTING CONCRETE TO HAVE A ROUGH SURFACE AND APPLY EPOXY BONDING AGENT PRIOR TO POURING NEW TOPPING.

REMOVE EXISTING FLOOR AND EXCAVATE TO DEPTH OF EXISTING COMPRESSOR PAD. DRILL AND EPOXY SET DOWELS IN EXISTING PAD. POUR NEW PAD EXTENSION AS SHOWN ON PLAN. USE EPOXY BONDING AGENT ON EXISTING SURFACE PRIOR TO POURING NEW CONCRETE.

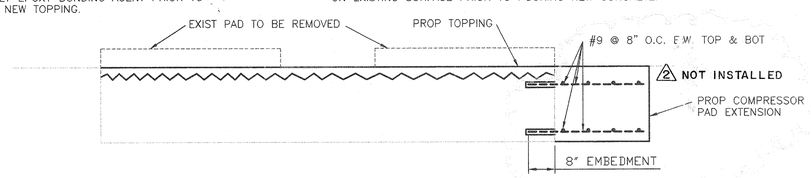

SECTION A-A

REV NO	DESCRIPTION	APP'D	DATE
2	AS BUILT	DJR	1/02
1	ADDENDUM 3	Kay Bee	4-99

SEAL: AS-BUILT

SEAL: STATE OF TEXAS · B. R. M. RATNALA · 36055 · REGISTERED PROFESSIONAL ENGINEER · 4/9/99

RATNALA & BAHL, INC.
Engineers • Architects • Surveyors
11767 KATY FREEWAY, SUITE 510
HOUSTON, TEXAS 77079

CH2M HILL
7600 West Tidwell Road, Suite 400
Houston Tx 77040
713.462.0161

Binkley & Barfield, Inc.
Consulting Engineers
1710 Seamist Drive Houston, Texas 77008

ALMEDA SIMS
BIOSOLIDS
DRYER REHABILITATION

CIP NO 0298-05-3
FILE NO: 4289-4

FOUNDATION LOCATION PLAN

CITY OF HOUSTON
DEPARTMENT OF PUBLIC WORKS AND ENGINEERING
ENGINEERING, CONSTRUCTION AND REAL ESTATE GROUP

SECTION APPROVALS

WATER ENGINEERING
TRAFFIC AND SIGNAL ENGINEERING
WASTEWATER ENGINEERING — 2-25-99
STREET & BRIDGE ENGINEERING
STORMWATER ENGINEERING
CONSTRUCTION — 3/2/99
2/25/99

OTHER DEPARTMENTS

PLANNING AND DEVELOPMENT
SPONSOR DEPARTMENT
CITY ENGINEER — 3-2-99 DATE
DIRECTOR OF PUBLIC WORKS AND ENGINEERING — 3/5/99 DATE

SUBMITTED:	DESIGNED BY: RAO
SCALE: 1/8"=1'-0"	DRAWN BY: WLW
DATE: 02/22/99	DWG. NO. : S-21
SURVEY BY: N/A	SHT NO. 136 of 159 SHTS
F B NO:	CITY DWG NO: 35001

ORIGINAL SCALE IN INCHES FOR REDUCED PLANS
0 1 2 3

CADD DWG FILE NO :F:/64305/9847/S-22R1
FILE DATE-OPERATOR: 02/22/99 WLW

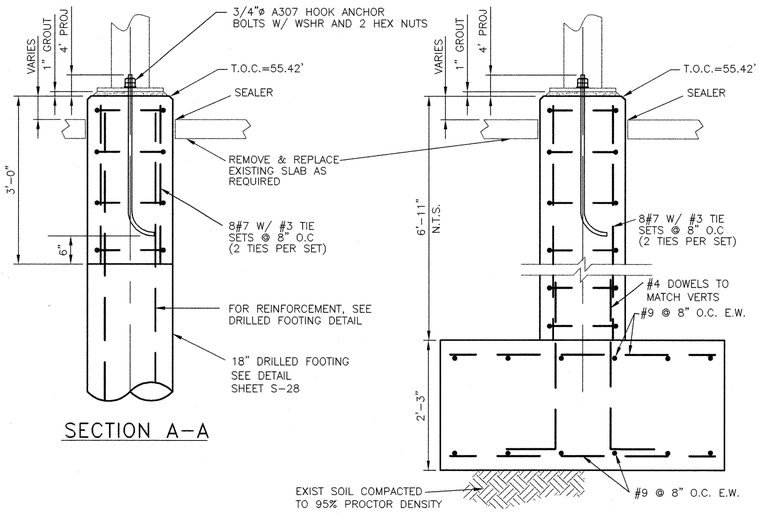

SECTION A–A

SECTION B–B

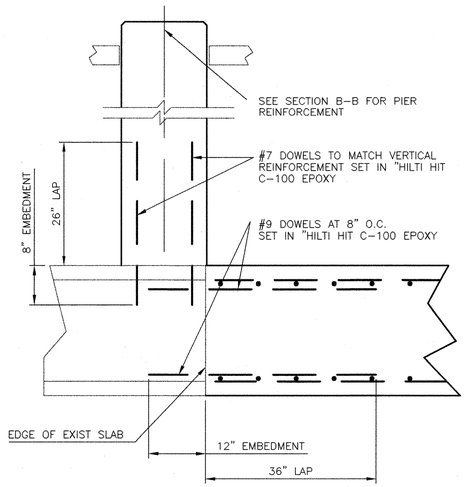

SECTION C–C

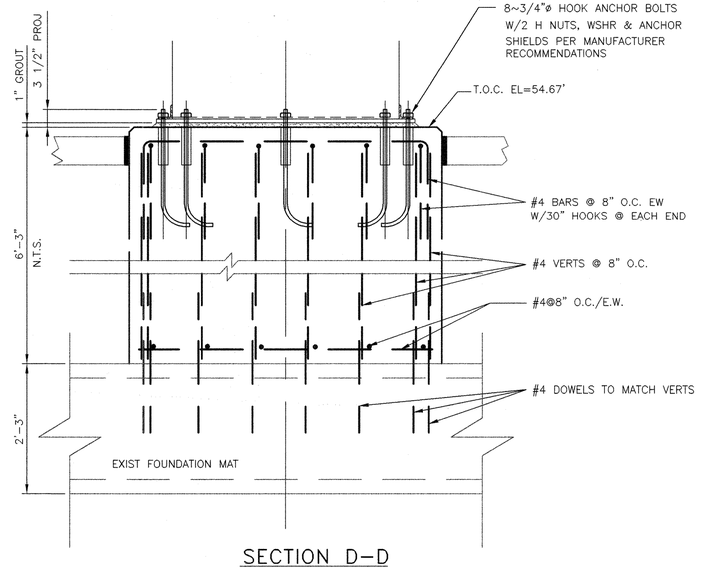

SECTION D–D

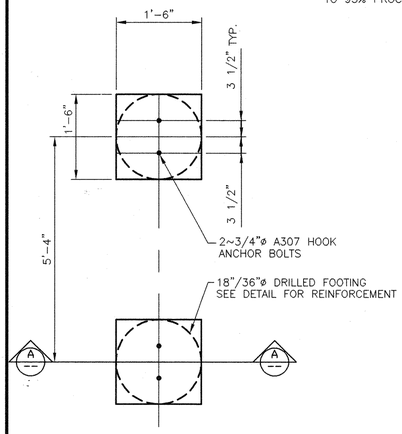

DETAIL 1
PLAN AT
BRIDGE FOUNDATION BT–1

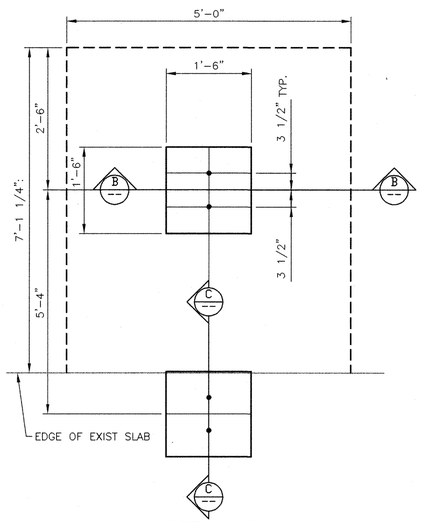

DETAIL 2
PLAN AT
BRIDGE FOUNDATION BT–2, 3 & 4

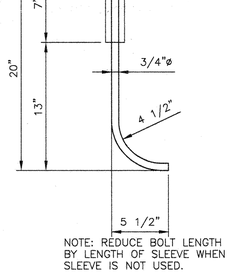

NOTE: REDUCE BOLT LENGTH BY LENGTH OF SLEEVE WHEN SLEEVE IS NOT USED.

ANCHOR BOLT DETAIL

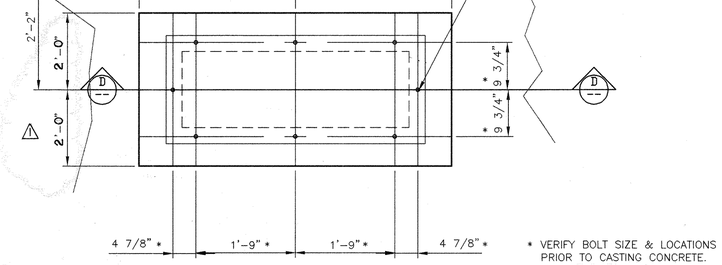

* VERIFY BOLT SIZE & LOCATIONS PRIOR TO CASTING CONCRETE.

DETAIL 3
PLAN AT
FOUNDATION FOR BUCKET ELEVATOR

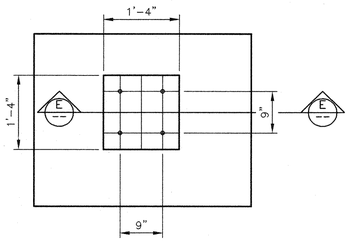

DETAIL 4

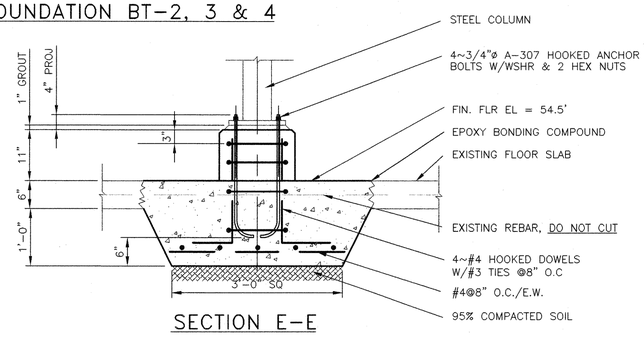

SECTION E–E

PLAN AT
FOUNDATION FOR TEE SUPPORTS

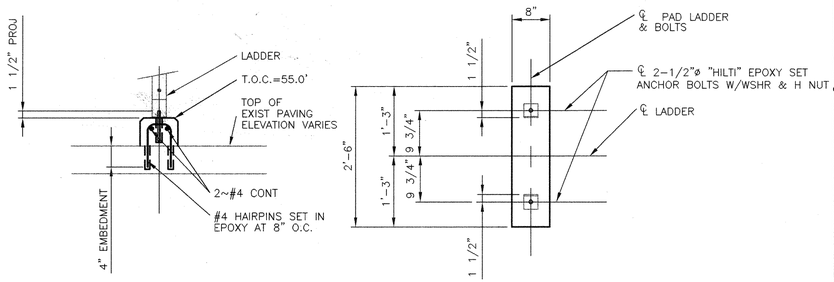

SECTION C–C

LADDER PAD

ORIGINAL SCALE IN INCHES FOR REDUCED PLANS
0 1 2 3

REV NO	DESCRIPTION	APP'D	DATE
1	AS BUILTS	DJR	1/01

SEAL

AS-BUILT

SEAL

STATE OF TEXAS
B. R. M. RATNALA
93189 36055
REGISTERED PROFESSIONAL ENGINEER

RATNALA & BAHL, INC.
Engineers • Architects • Surveyors
11767 KATY FREEWAY, SUITE 510
HOUSTON, TEXAS 77079

CH2M HILL
7600 West Tidwell Road, Suite 400
Houston Tx 77040
713.462.0161

Binkley & Barfield, Inc.
Consulting Engineers
1710 Seamist Drive Houston, Texas 77008

ALMEDA SIMS
BIOSOLIDS
DRYER REHABILITATION

CIP NO 0298-05-3
FILE NO: 4289-4

FOUNDATION DETAILS

CITY OF HOUSTON
DEPARTMENT OF PUBLIC WORKS AND ENGINEERING
ENGINEERING, CONSTRUCTION AND REAL ESTATE GROUP

SECTION APPROVALS

WATER ENGINEERING
TRAFFIC AND SIGNAL ENGINEERING
WASTEWATER ENGINEERING 2-25-99
STREET & BRIDGE ENGINEERING
STORMWATER ENGINEERING
CONSTRUCTION 3/2/99
2/25/99

OTHER DEPARTMENTS

PLANNING AND DEVELOPMENT
SPONSOR DEPARTMENT
CITY ENGINEER 3-2-99 DATE
DIRECTOR OF PUBLIC WORKS AND ENGINEERING 3/5/99 DATE

SUBMITTED:
SCALE: 3/4"=1'-0"
DATE: 02/22/99
SURVEY BY: N/A
F B NO:

DESIGNED BY: WLW
DRAWN BY: WLW
DWG. NO. : S-22
SHT NO 137 of 159 SHTS
CITY DWG NO: 35001

CADD DWG FILE NO :F:/64305/9847/S-23R1
FILE DATE-OPERATOR: 02/22/99 WLW

NOTES

1. FOR GENERAL NOTES SEE SHT. S-22.

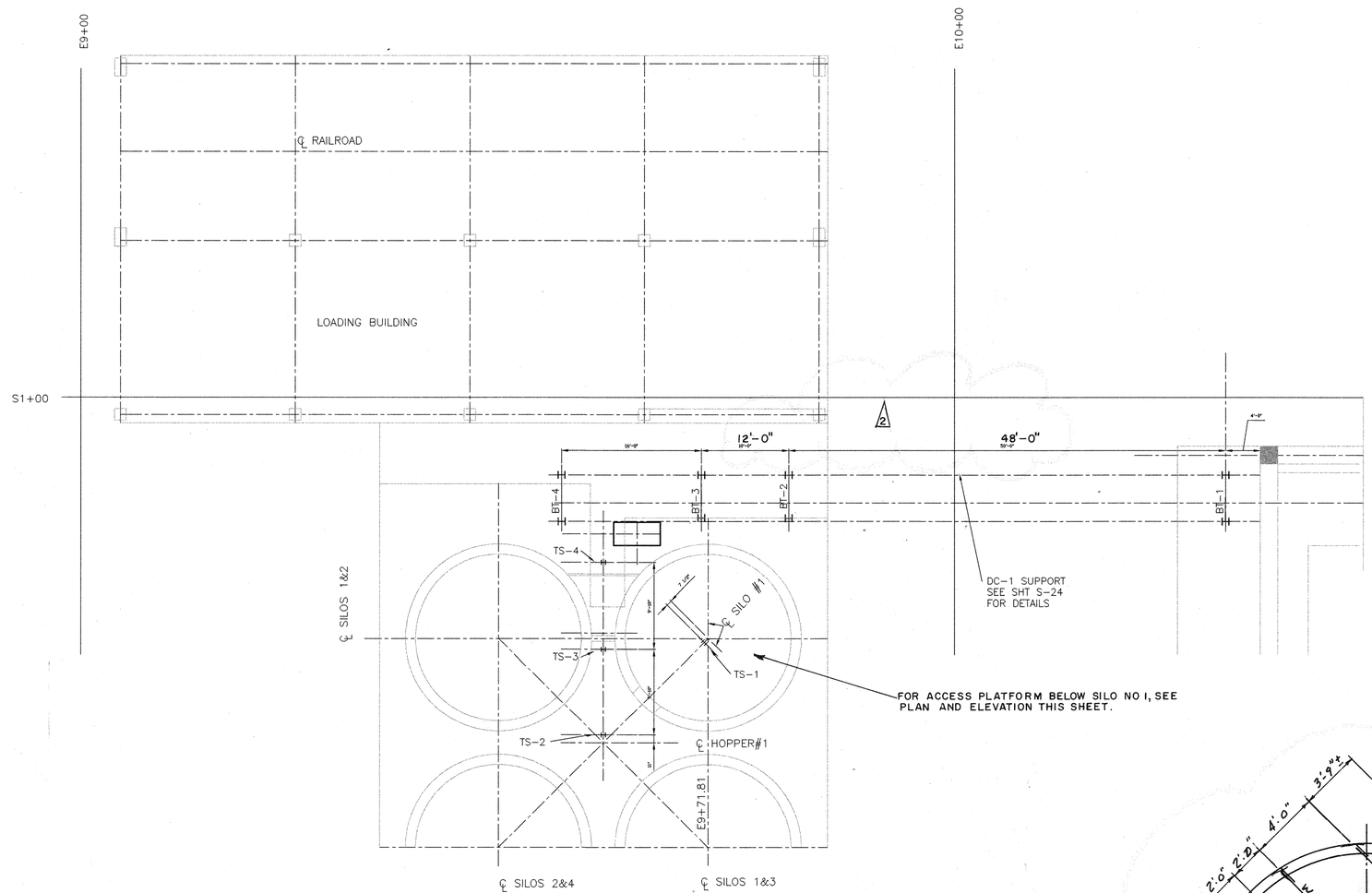

STEEL LOCATION PLAN

SCALE:1/8"=1'

TEE SUPPORT SCHEDULE			
ITEM	A	B	C
TS-1	C10x15.3	1'-0"	1'-0"
TS-2	3'-10"	1'-0"	1'-0"
TS-3	5'-7 1/4"	1'-0"	1'-0"
TS-4	7'-4 1/4"	1'-0"	1'-0"

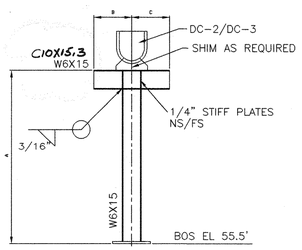

TEE SUPPORT DETAIL

N.T.S.

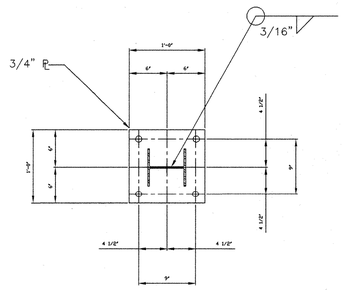

BASE PLATE DETAIL

N.T.S.

NOTE: SEE PLAN FOR ORIENTATION

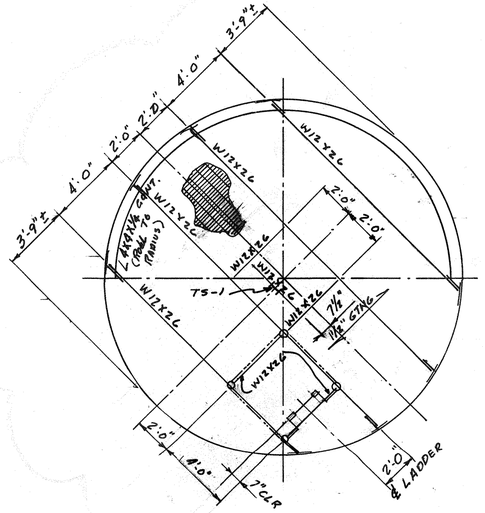

PLAN

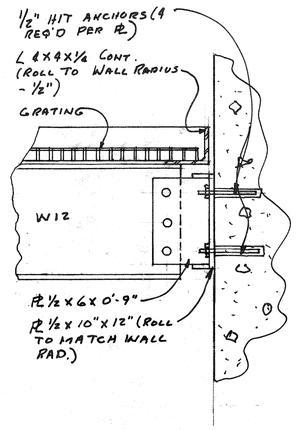

ELEVATION

ACCESS PLATFORM

SCALE:1/4"=1'

REV NO	DESCRIPTION	APP'D	DATE
2	AS-BUILT DRAWING	DJR	12-01
1	ADDENDUM 3		4-99

SEAL: AS-BUILT

SEAL: STATE OF TEXAS — B. R. M. RATNALA — 36055 — REGISTERED PROFESSIONAL ENGINEER

RATNALA & BAHL, INC.
Engineers • Architects • Surveyors
11767 KATY FREEWAY, SUITE 510
HOUSTON, TEXAS 77079

CH2M HILL
7600 West Tidwell Road, Suite 400
Houston Tx 77040
713.462.0161

Binkley & Barfield, Inc.
Consulting Engineers
1710 Seamist Drive Houston, Texas 77008

ALMEDA SIMS
BIOSOLIDS
DRYER REHABILITATION

CIP NO 0298-05-3
FILE NO: 4289-4

STRUCTURAL STEEL
LOCATION PLAN

CITY OF HOUSTON
DEPARTMENT OF PUBLIC WORKS AND ENGINEERING
ENGINEERING, CONSTRUCTION AND REAL ESTATE GROUP

SECTION APPROVALS

WATER ENGINEERING

TRAFFIC AND SIGNAL ENGINEERING

WASTEWATER ENGINEERING — 2-25-99

STREET & BRIDGE ENGINEERING

STORMWATER ENGINEERING

CONSTRUCTION — 3/2/99

OTHER DEPARTMENTS

PLANNING AND DEVELOPMENT

SPONSOR DEPARTMENT

CITY ENGINEER — DATE 3-2-99

DIRECTOR OF PUBLIC WORKS AND ENGINEERING — DATE 3/8/99

SUBMITTED:
SCALE: AS NOTED
DATE: 02/22/99
SURVEY BY: N/A
F B NO:

DESIGNED BY: WLW
DRAWN BY: WLW
DWG. NO. : S-23
SHT NO 138 of 159 SHTS

CITY DWG NO: 35001

ADDENDUM NO.3

ORIGINAL SCALE IN INCHES FOR REDUCED PLANS
0 1 2 3

CADD DWG FILE NO. :F:/64305/9847/S-24R1
PLEDATE=02/22/99 WLW

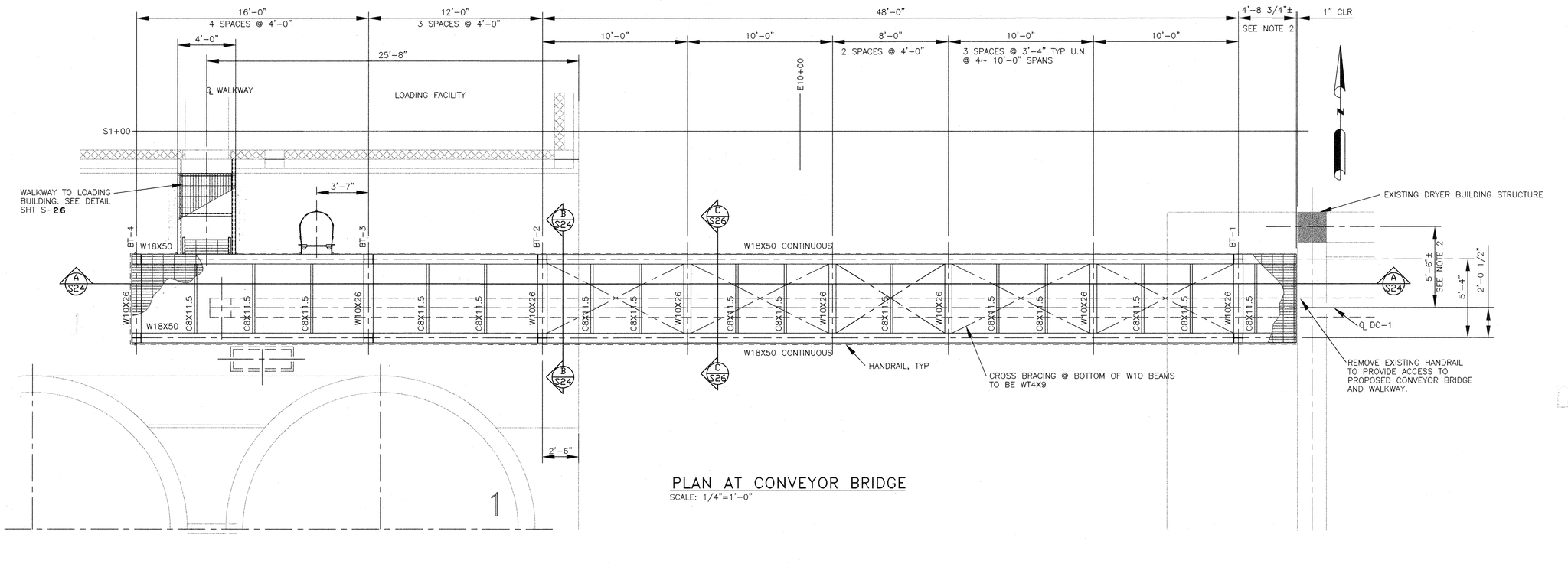

PLAN AT CONVEYOR BRIDGE
SCALE: 1/4"=1'-0"

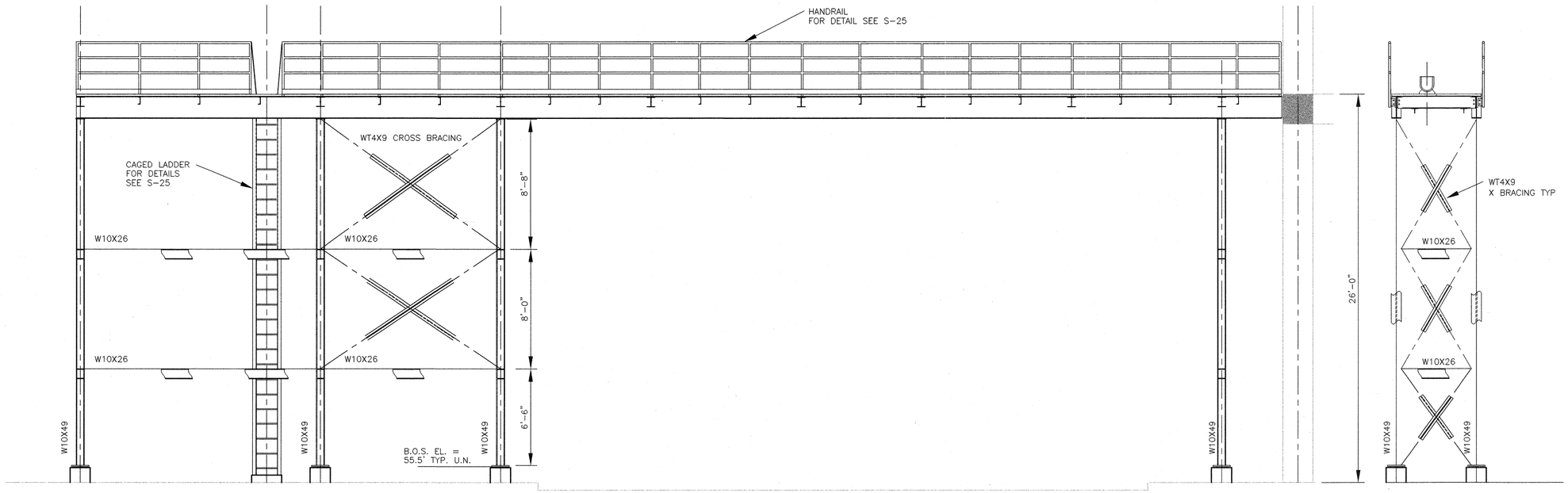

SECTION A-A
SCALE: 1/4"=1'-0"
T.O.S. EL. = 80'-4 1/2"

SECTION B-B
SCALE: 1/4"=1'-0"

ORIGINAL SCALE IN INCHES FOR REDUCED PLANS
0 1 2 3

REV NO	DESCRIPTION	APP'D	DATE

SEAL: AS-BUILT

SEAL: STATE OF TEXAS — B. R. M. RATNALA — 36055 — REGISTERED PROFESSIONAL ENGINEER — 5/4/99

RATNALA & BAHL, INC.
Engineers • Architects • Surveyors
11767 KATY FREEWAY, SUITE 510
HOUSTON, TEXAS 77079

CH2M HILL
7600 West Tidwell Road, Suite 400
Houston Tx 77040
713.462.0161

Binkley & Barfield, Inc.
Consulting Engineers
1710 Seamist Drive Houston, Texas 77008

ALMEDA SIMS
BIOSOLIDS
DRYER REHABILITATION

CIP NO 0298-05-3
FILE NO: 4289-4

PLAN @ CONVEYOR BRIDGE

CITY OF HOUSTON
DEPARTMENT OF PUBLIC WORKS AND ENGINEERING
ENGINEERING, CONSTRUCTION AND REAL ESTATE GROUP

SECTION APPROVALS

WATER ENGINEERING
TRAFFIC AND SIGNAL ENGINEERING
WASTEWATER ENGINEERING 2-25-99
STREET & BRIDGE ENGINEERING
STORMWATER ENGINEERING
CONSTRUCTION 3/2/99
2/24/99

OTHER DEPARTMENTS

PLANNING AND DEVELOPMENT
SPONSOR DEPARTMENT
CITY ENGINEER 3-2-99 DATE
DIRECTOR OF PUBLIC WORKS AND ENGINEERING 3/8/99 DATE

SUBMITTED:
SCALE: 1/4"=1'-0"
DATE: 02/22/99
SURVEY BY: N/A
F B NO:

DESIGNED BY: WLW
DRAWN BY: WLW
DWG. NO. : S-24
SHT NO 139 of 159 SHTS
CITY DWG NO: 35001

CADD DWG FILE NO :F:/64305/9847/S-25R1
FILE DATE-OPERATOR: 02/22/99 WLW

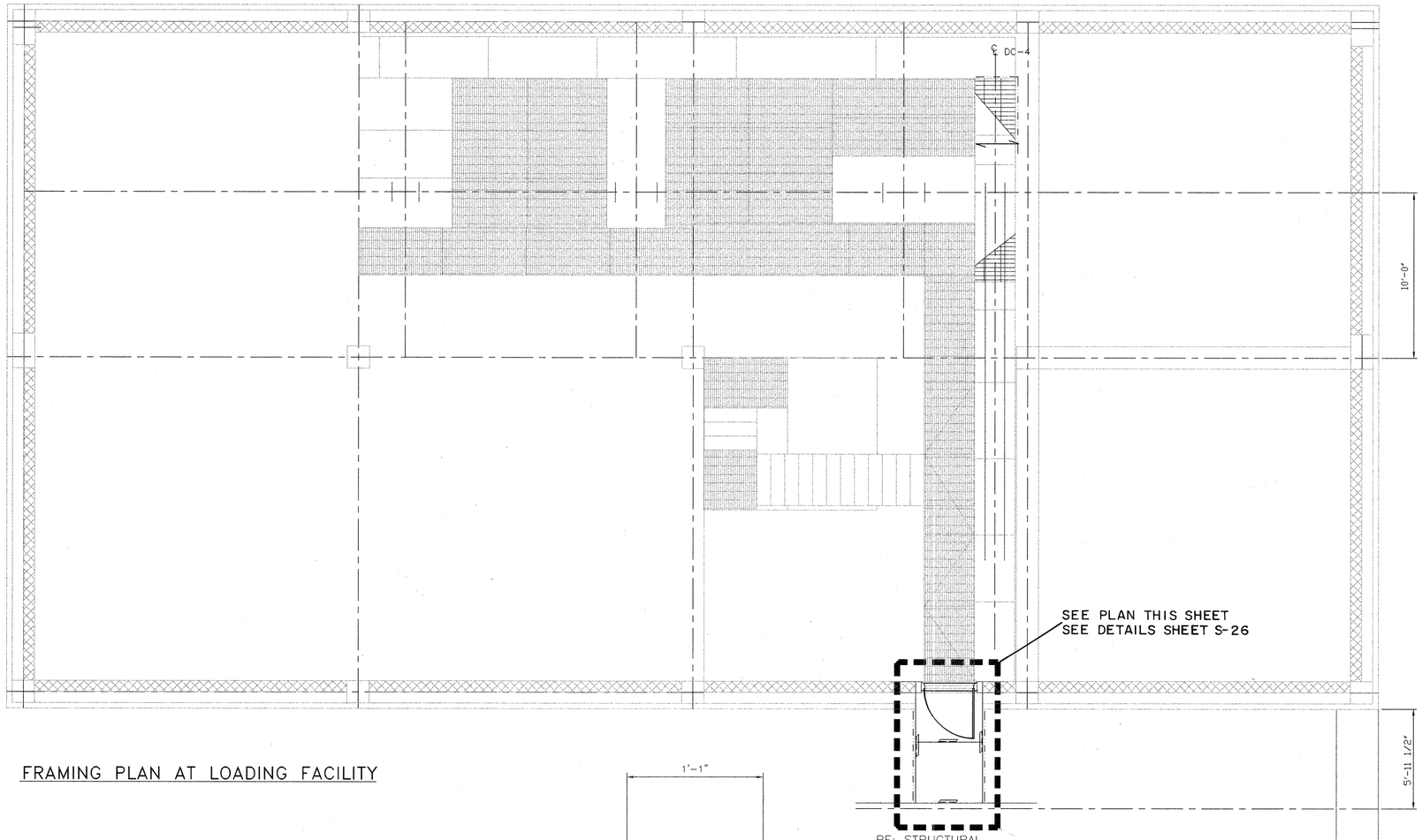

FRAMING PLAN AT LOADING FACILITY

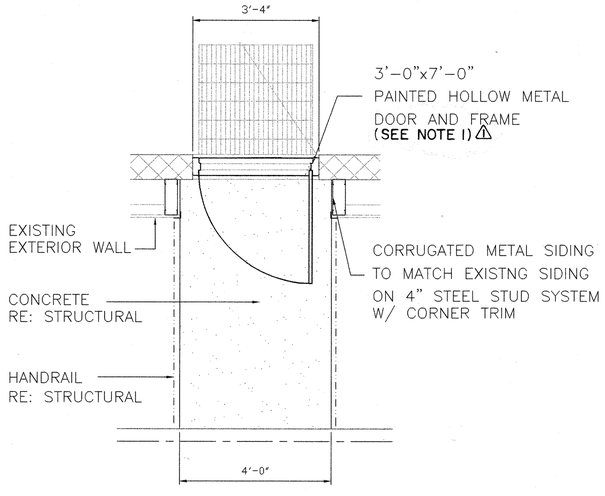

PLAN AT DOOR OPENING
SCALE: 1/2"=1'-0"

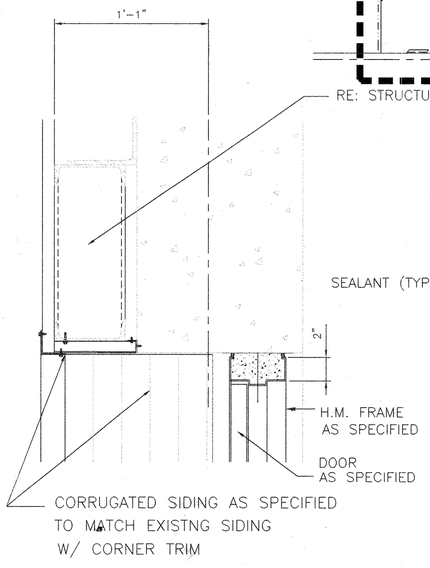

DOOR HEAD DETAIL
SCALE: 1/2"=1'-0"

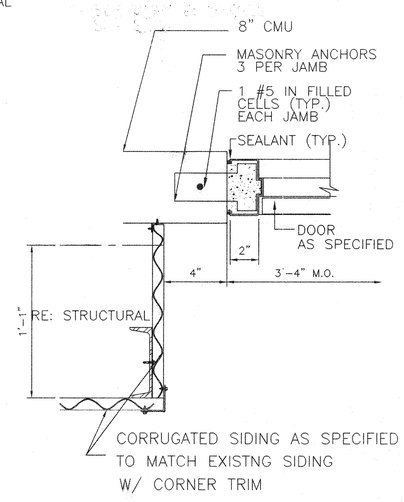

DOOR JAMB DETAIL
SCALE: 1/2"=1'-0"

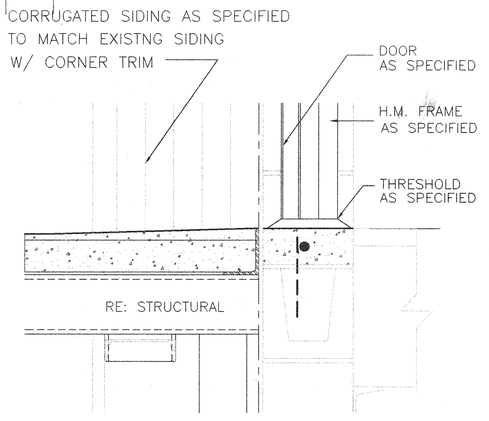

DOOR SILL DETAIL
SCALE: 1/2"=1'-0"

ORIGINAL SCALE IN INCHES
FOR REDUCED PLANS
0 1 2 3

NOTES:

1. ⚠ PROVIDE SIMILAR 6'-0"x7'-0" DOUBLE DOORS WITH FRAME AND LITES AT GROUND LEVEL ON EAST SIDE OF SILO NO. 1 AND A 3'-0"x7'-0" DOOR WITH FRAME AND LITES ON THE WEST SIDE OF SILO NO. 4.

REV NO	DESCRIPTION	APP'D	DATE
⚠	ADDENDUM NO. 3-ADD NOTES	DJR	4-8-99

SEAL: AS-BUILT

SEAL: STATE OF TEXAS · B. R. M. RATNALA · P.E. 36055 · REGISTERED PROFESSIONAL ENGINEER · 2-25-99

RATNALA & BAHL, INC.
Engineers • Architects • Surveyors
11767 KATY FREEWAY, SUITE 510
HOUSTON, TEXAS 77079

CH2M HILL
7600 West Tidwell Road, Suite 400
Houston Tx 77040
713.462.0161

Binkley & Barfield, Inc.
Consulting Engineers
1710 Seamist Drive Houston, Texas 77008

ALMEDA SIMS
BIOSOLIDS
DRYER REHABILITATION

CIP NO 0298-05-3
FILE NO: 4289-4

LOADING BUILDING
MODIFICATIONS TO
PLATFORMS AND SUPPORTS

CITY OF HOUSTON
DEPARTMENT OF PUBLIC WORKS AND ENGINEERING
ENGINEERING, CONSTRUCTION AND REAL ESTATE GROUP

SECTION APPROVALS

WATER ENGINEERING — TRAFFIC AND SIGNAL ENGINEERING

WASTEWATER ENGINEERING 2-25-99 — STREET & BRIDGE ENGINEERING

STORMWATER ENGINEERING — CONSTRUCTION 3/4/99

3/4/99

OTHER DEPARTMENTS

PLANNING AND DEVELOPMENT — SPONSOR DEPARTMENT

CITY ENGINEER 3-8-99 DATE

DIRECTOR OF PUBLIC WORKS AND ENGINEERING 3/5/99 DATE

SUBMITTED:
SCALE: 1/4"=1'-0"
DATE: 02/22/99
SURVEY BY: N/A
F B NO:

DESIGNED BY: WLW
DRAWN BY: WLW
DWG. NO. : S-25
SHT NO 140 of 159 SHTS
CITY DWG NO: 35001

CADD DWG FILE NO :F:/64305/3847/S-26R1
RELEASE-OPERATOR: 02/22/99 WLW

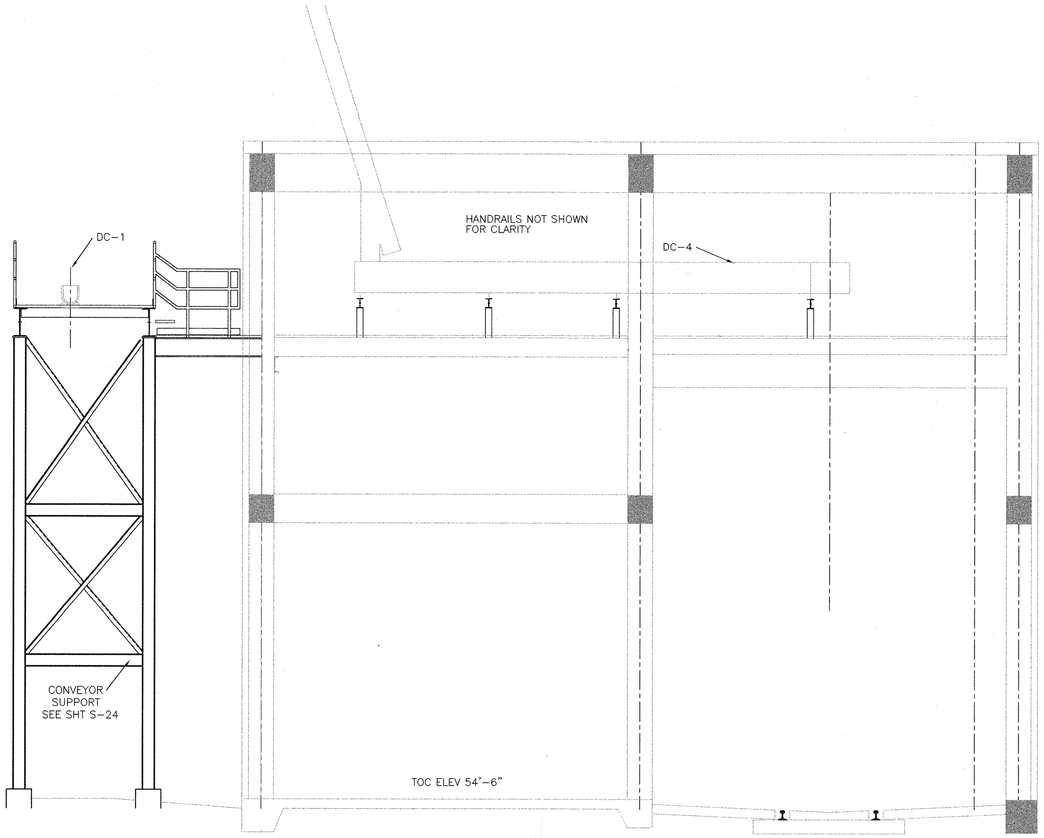

SECTION A-A
SCALE: 1/4"=1'-0" S-25

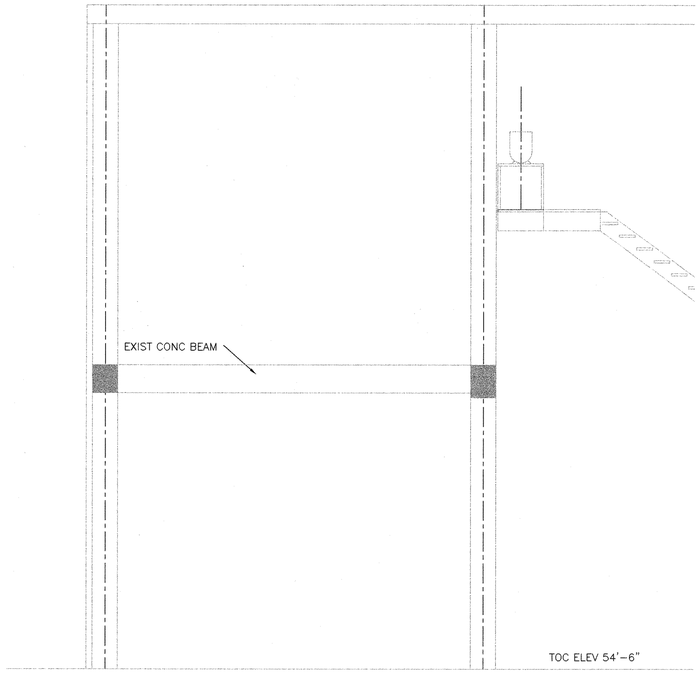

SECTION B-B
SCALE: 1/4"=1'-0" S-25

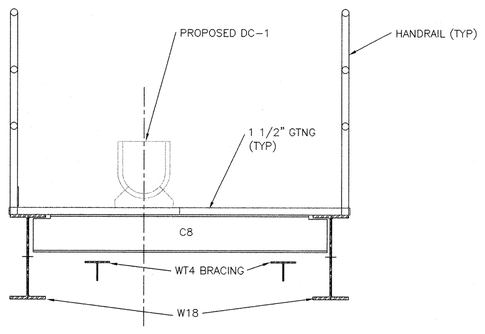

SECTION C-C
SCALE: 3/4"=1'-0" S-24

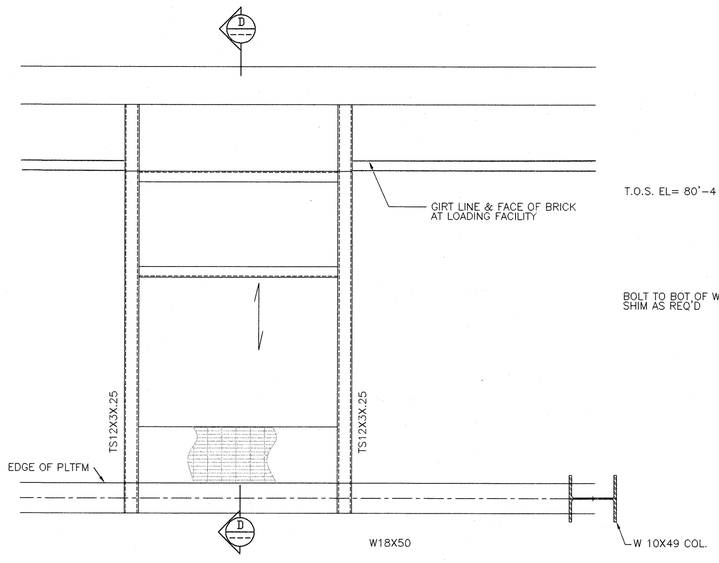

PLAN
SCALE: 3/4"=1'-0"

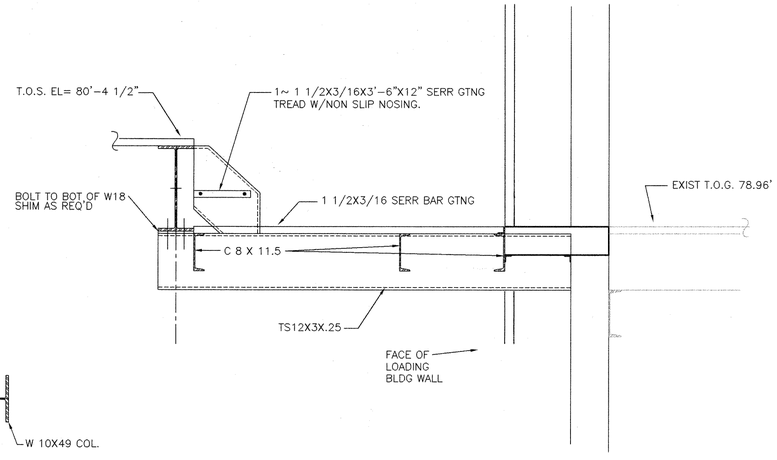

SECTION D-D
SCALE: 3/4"=1'-0"

ORIGINAL SCALE IN INCHES FOR REDUCED PLANS
0 1 2 3

REV NO	DESCRIPTION	APP'D	DATE

SEAL: AS-BUILT

SEAL: STATE OF TEXAS, B. R. M. RATNALA, 36055, REGISTERED PROFESSIONAL ENGINEER, 2/24/99

RATNALA & BAHL, INC.
Engineers • Architects • Surveyors
11767 KATY FREEWAY, SUITE 510
HOUSTON, TEXAS 77079

CH2M HILL
7600 West Tidwell Road, Suite 400
Houston Tx 77040
713.462.0161

Binkley & Barfield, Inc.
Consulting Engineers
1710 Seamist Drive Houston, Texas 77008

ALMEDA SIMS BIOSOLIDS DRYER REHABILITATION

CIP NO 0298-05-3
FILE NO: 4289-4

STRUCTURAL SECTIONS

CITY OF HOUSTON

DEPARTMENT OF PUBLIC WORKS AND ENGINEERING
ENGINEERING, CONSTRUCTION AND REAL ESTATE GROUP

SECTION APPROVALS

WATER ENGINEERING
TRAFFIC AND SIGNAL ENGINEERING
WASTEWATER ENGINEERING 2-25-99
STREET & BRIDGE ENGINEERING
STORMWATER ENGINEERING
CONSTRUCTION 3/2/99
2/25/99

OTHER DEPARTMENTS

PLANNING AND DEVELOPMENT
SPONSOR DEPARTMENT
CITY ENGINEER 3-2-99 DATE
DIRECTOR OF PUBLIC WORKS AND ENGINEERING 3/8/99 DATE

SUBMITTED:	DESIGNED BY: WLW
SCALE: AS NOTED	DRAWN BY: WLW
DATE: 02/22/99	DWG. NO. : S-26
SURVEY BY: N/A	SHT NO 14 of 153 SHTS
F B NO:	CITY DWG NO: 35001

CADD DWG FILE NO :F:/64305/9847/S-27R1
FILE DATE-OPERATOR: 02/22/99 WLW

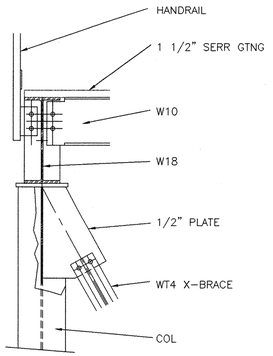

DETAIL 1 S-24

NONE

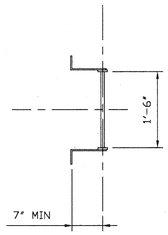

LADDER AT SILO #1 PLATFORM

* WHEN DISTANCE BETWEEN ATTACHMENT LUGS IS
10'-0" OR LESS USE 2" X 3/8" FLAT BAR FOR LADDER RAILS
IF DISTANCE IS 10'-6" TO 15'-0" USE L 3"X2"X1/4" (LLO) RAILS
IF DISTANCE IS 15'-6" TO 20'-0" USE L 4"X3"X1/4" (LLO) RAILS

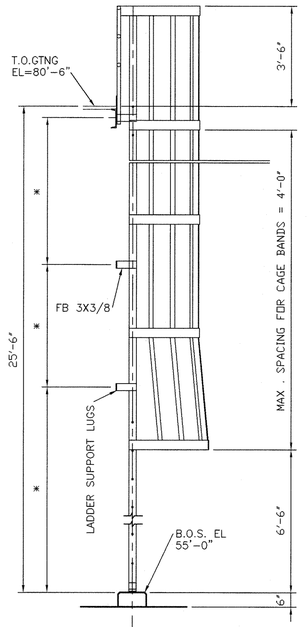

LADDER SIDE ELEVATION

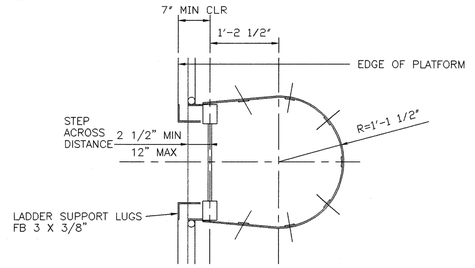

PLAN AT TOP CAGE BAND

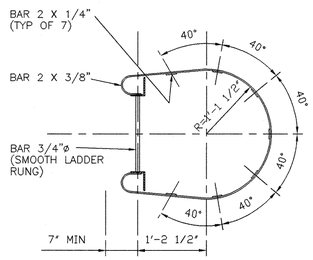

PLAN AT SECOND CAGE BAND AND ABOVE

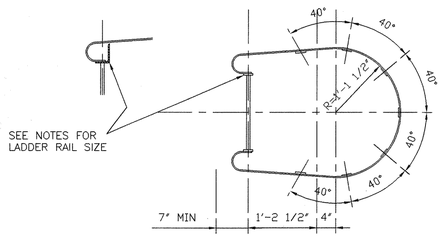

PLAN AT BOTTOM CAGE BAND ONLY

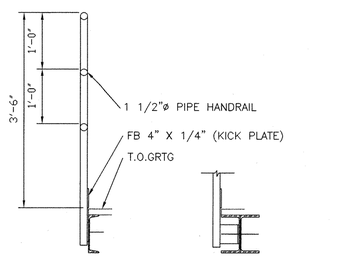

CONNECTION @ CHANNEL CONNECTION @ BEAM

HANDRAIL DETAILS

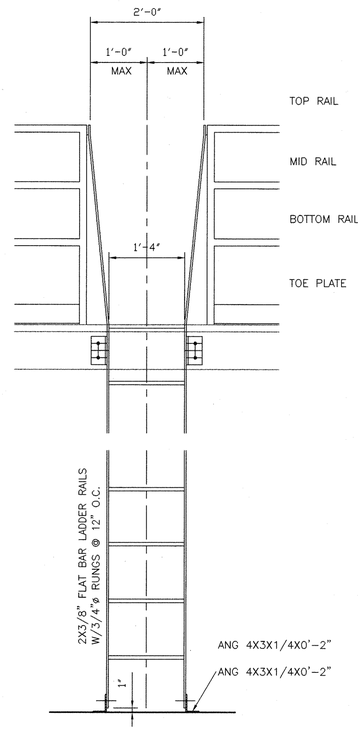

LADDER ELEVATION

NOTES

1. ALL STRUCTURAL STEEL TO BE A-36 UNLESS OTHERWISE NOTED.
2. ALL BEAM CONNECTIONS TO BE IN ACCORDANCE WITH THE LATEST A.I.S.C. STEEL CONSTRUCTION MANUAL.
3. ALL CONNECTIONS SHALL HAVE A MINIMUM OF 2'3/4"ø BOLTS UNLESS NOTED OTHERWISE.
4. FIELD CUT AND BAND ALL PIPE OPENINGS IN GRATING.
5. HANDRAIL BOLTS SHALL BE 1/2"ø UNLESS NOTED OTHERWISE.
6. ALL LADDERS OVER 10'-0" IN HEIGHT SHALL BE CAGED WITH CAGE STARTING AT 7'-0" MIN ABOVE GRADE OR PLATFORM LEVEL.
7. ALL WELDS MADE ON GALVANIZED MATERIAL SHALL BE COVERED WITH ZINC BASED COATING SUCH AS "GALV-O-WELD"
8. GRATING TO BE SERRATED (NON-SKID) GALVANIZED.
9. ALL EXPOSED EDGES OF GRATING TO BE BANDED BEFORE GALVANIZING.
10. DESIGN OF STAIRWAYS AND WALKWAYS AS PER TEXAS OCCUPATIONAL SAFETY STANDARDS, SECTION 7.2 (5) & (6), AND O.H.S.A. REGULATIONS.

REV NO	DESCRIPTION	APP'D	DATE

SEAL: AS-BUILT

SEAL: STATE OF TEXAS — B. R. M. RATNALA — 36055 — REGISTERED PROFESSIONAL ENGINEER — 2/24/99

RATNALA & BAHL, INC.
Engineers • Architects • Surveyors
11767 KATY FREEWAY, SUITE 510
HOUSTON, TEXAS 77079

CH2M HILL
7600 West Tidwell Road, Suite 400
Houston Tx 77040
713.462.0161

Binkley & Barfield, Inc.
Consulting Engineers
1710 Seamist Drive Houston, Texas 77008

ALMEDA SIMS
BIOSOLIDS
DRYER REHABILITATION

CIP NO 0298-05-3
FILE NO: 4289-4

STRUCTURAL DETAILS

CITY OF HOUSTON
DEPARTMENT OF PUBLIC WORKS AND ENGINEERING
ENGINEERING, CONSTRUCTION AND REAL ESTATE GROUP

SECTION APPROVALS

WATER ENGINEERING — TRAFFIC AND SIGNAL ENGINEERING

WASTEWATER ENGINEERING 2-25-99 — STREET & BRIDGE ENGINEERING

STORMWATER ENGINEERING — CONSTRUCTION 3/2/99

2/25/99

OTHER DEPARTMENTS

PLANNING AND DEVELOPMENT — SPONSOR DEPARTMENT

CITY ENGINEER 3-2-99 DATE

DIRECTOR OF PUBLIC WORKS AND ENGINEERING 3/5/99 DATE

SUBMITTED:
SCALE: AS NOTED
DATE: 02/22/99
SURVEY BY: N/A
F B NO:

DESIGNED BY: WLW
DRAWN BY: WLW
DWG. NO. : S-27
SHT NO 142 of 159 SHTS
CITY DWG NO: 35001

ORIGINAL SCALE IN INCHES FOR REDUCED PLANS
0 1 2 3

CADD DWG FILE NO :F:/64305/9847-S-28R1
FILE DATE-OPERATOR: 02/23/99 WLW

GENERAL STRUCTURAL NOTES

1. DESIGN SHALL CONFORM TO THE LATEST BUILDING CODE REQUIREMENTS FOR STRUCTURAL CONCRETE (ACI-318) WITH SPECIAL REQUIREMENTS OF ENVIRONMENTAL ENGINEERING STRUCTURES.
2. ALL REINFORCING BARS SHALL CONFORM TO ASTM A-615, GRADE 60. ARRANGEMENT AND DETAILS OF REINFORCING STEEL, INCLUDING BAR SUPPORTS AND SPACERS, SHALL BE IN ACCORDANCE WITH THE LATEST ACI DETAILING MANUAL, UNLESS OTHERWISE NOTED.
3. ALL SLAB AND BEAM REINFORCEMENT SHALL HAVE A MINIMUM EXTENSION INTO THE SUPPORT IN ACCORDANCE WITH THE LATEST ACI CODE. IF SUCH EXTENSION IS NOT POSSIBLE, BARS SHALL TERMINATE IN STANDARD HOOKS.
4. HORIZONTAL WALL REINFORCEMENT AND TEMPERATURE REINFORCEMENT SHALL LAP A MINIMUM OF 1.7 Ld AT SPLICES.
5. UNLESS OTHERWISE NOTED ON THE DRAWINGS, CONCRETE COMPRESSIVE STRENGTH AT 28 DAYS SHALL NOT BE LESS THAN THE FOLLOWING:

STRUCTURAL MEMBERS, FOUNDATIONS WALL AND SUSPENDED SLABS	4,000 PSI
SLABS ON GRADE	4,000 PSI
LEAN CONCRETE CLASS B	1,500 PSI
GROUT FILL CLASS H	7,000 PSI

6. UNLESS OTHERWISE SHOWN, THE COVER FOR REINFORCING STEEL SHALL BE AS FOLLOWS:

SLABS

TOP AND BOTTOM OF FORMED SLABS	2"
TOP OF WALK AND DRIVEWAY SLABS	2"
SURFACES IN CONTACT WITH LIQUID	2"
BOTTOM OF FILL OR SOIL	3"

FOOTINGS

TOP AND SIDES	2 1/2"
BOTTOM	3"

WALLS

LESS THAN 12" THICK --- 1 1/2"
12" OR OVER IN THICKNESS WITH POURS LESS THAN 10' HIGH ------- 2"
12" OR OVER IN THICKNESS WITH POURS MORE THAN 10' HIGH -----2 1/2"

BEAMS AND GIRDERS

COVER AT TOP, BOTTOM OR SIDES OF LONGITUDINAL REINFORCING-----2"

COLUMNS

COVER OVER VERTICAL BARS ---------- 2"

7. USE TYPE 'C2' JOINT FOR ALL CONSTRUCTION JOINTS IN WALLS WHICH SEPARATE AREAS OF SOIL OR LIQUID FROM PERMANENTLY DRY AREAS SUCH AS TUNNELS, GALLERIES, BASEMENT ROOMS ETC. USE TYPE "C1" JOINT AT ALL OTHER CONSTRUCTION JOINTS, UNLESS OTHERWISE NOTED ON DRAWINGS.
8. ALL EXPOSED EDGES OF BEAMS, COLUMNS, SLABS AND WALLS SHALL BE CHAMFERED 3/4" UNLESS MASONRY OR OTHER MEMBERS ARE ERECTED FLUSH WITH THEM.
9. REFER TO MECHANICAL AND ELECTRICAL DRAWINGS FOR ALL SLEEVES, PIPES, CONDUITS AND MISC. ANCHORING DEVICES TO BE INCORPORATED IN THE CONSTRUCTION.

FOUNDATIONS

1. ALLOWABLE SOIL BEARING PRESSURE, EXCAVATION AND BACK FILL FOR FOUNDATIONS STRUCTURES WERE OBTAINED FROM REPORT NO. 275-72E PREPARED BY MURILLO ENGINEERING AND TESTING SERVICE, INC.
2. ALL EXCAVATIONS SHALL BE CARRIED OUT IN THE DRY, AND PROVISIONS SHALL BE MADE TO PREVENT THE BOTTOM OF ALL EXCAVATIONS FROM FREEZING OR FLOODING AT ALL TIMES.
3. ALL FOUNDATIONS SHALL BE CONSTRUCTED IN EXCAVATIONS FREE OF STANDING WATER.
4. BACK FILL MATERIAL, PLACING AND COMPACTION OF BACK FILL SHALL BE IN ACCORDANCE WITH THE DRAWINGS AND THE CONTRACT SPECIFICATIONS.

STRUCTURAL STEEL

1. STRUCTURAL STEEL SHALL CONFORM TO THE LATEST AISC "SPECIFICATION FOR THE DESIGN, FABRICATION AND ERECTION OF STRUCTURAL STEEL FOR BUILDINGS". ALL STRUCTURAL STEEL SHALL BE ASTM A-36.
2. ELEVATIONS OF STEEL BEAMS SHOWN ON FRAMING PLANS REFER TO TOP OF FLANGE, UNLESS OTHERWISE NOTED.
3. ALL BOLTED CONNECTIONS SHALL BE MADE WITH 3/4 " DIAMETER ASTM A-325 BOLTS EXCEPT AS OTHERWISE SHOWN OR NOTED. ALL CONNECTIONS SHALL BE CAPABLE OF SUPPORTING ONE HALF THE MAXIMUM ALLOWABLE UNIFORM LOAD FOR THE INDICATED BEAM SIZE AND SPAN IN AISC MANUAL OF STEEL CONSTRUCTION, EXCEPT AS NOTED.
4. FIELD CONNECTIONS SHALL BE BOLTED, EXCEPT WHERE NOTED.
5. ALL WELDING SHALL CONFORM TO THE LATEST SPECIFICATION OF THE AMERICAN WELDING SOCIETY. ALL WELDED CONNECTIONS SHALL BE MADE WITH AWS A5.1 OR A5.5 E70 XX ELECTRODE.
6. ANCHOR BOLTS SHALL CONFORM TO ASTM A307.
7. ALL EQUIPMENT ANCHOR BOLT DIMENSIONS AND LOCATIONS SHALL BE VERIFIED FROM CERTIFIED VENDOR DRAWINGS, PRIOR TO CONSTRUCTION.
8. ALL GRATING SHALL BE 1 1/2" SERRATED GRATING. GRATING SHALL BE SECURED TO THE SUPPORTING STEEL WITH GALVANIZED GRATING CLIPS.
9. ALL STRUCTURAL SYSTEM SHALL BE GALVANIZED AFTER FABRICATION.

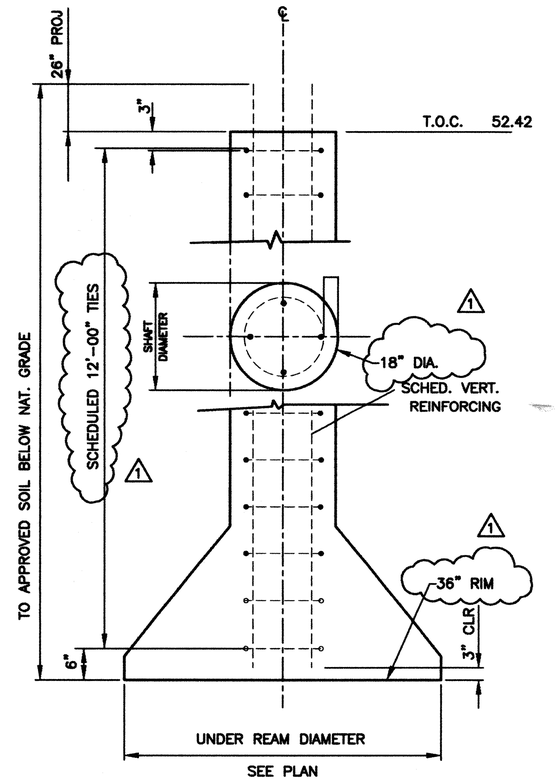

DRILLED FOOTING

N.T.S.

FOOTING SCHEDULE

SHAFT DIA.	VERTICAL REINF.	TIES	NOTES
12"	4 #6	#3 @ 8" O.C.	
18"	6 #6	#3 @ 12" O.C.	
21"	6 #6	#3 @ 12" O.C.	
24"	6 #7	#3 @ 12" O.C.	
30"	6 #7	#3 @ 12" O.C.	
36"	8 #7	#3 @ 12" O.C.	

REV NO	DESCRIPTION	APP'D	DATE
1	AS BUILT DRAWING	DJR	12/01

SEAL — STATE OF TEXAS — DAVID J. ROSS — 68267 — REGISTERED PROFESSIONAL ENGINEER

SEAL — AS-BUILT

RATNALA & BAHL, INC.
Engineers • Architects • Surveyors
11767 KATY FREEWAY, SUITE 510
HOUSTON, TEXAS 77079

CH2M HILL
7600 West Tidwell Road, Suite 400
Houston Tx 77040
713.462.0161

Binkley & Barfield, Inc.
Consulting Engineers
1710 Seamist Drive Houston, Texas 77008

ALMEDA SIMS
BIOSOLIDS
DRYER REHABILITATION

CIP NO 0298-05-3
FILE NO: 4289-4

STRUCTURAL GENERAL NOTES

CITY OF HOUSTON
DEPARTMENT OF PUBLIC WORKS AND ENGINEERING
ENGINEERING, CONSTRUCTION AND REAL ESTATE GROUP

SECTION APPROVALS

WATER ENGINEERING
TRAFFIC AND SIGNAL ENGINEERING
WASTEWATER ENGINEERING
STREET & BRIDGE ENGINEERING
STORMWATER ENGINEERING
CONSTRUCTION

OTHER DEPARTMENTS

PLANNING AND DEVELOPMENT
SPONSOR DEPARTMENT

CITY ENGINEER — DATE
DIRECTOR OF PUBLIC WORKS AND ENGINEERING — DATE

SUBMITTED:
SCALE:
DATE: 02/22/99
SURVEY BY: N/A
F B NO:

DESIGNED BY: RAO
DRAWN BY: WLW
DWG. NO. : S-28
SHT NO 143 of 159 SHTS
CITY DWG NO: 35001

ORIGINAL SCALE IN INCHES FOR REDUCED PLANS
0 1 2 3

64305A/E01.DWG
01/28/99-DVB
FILE DATE--OPERATOR:

ELECTRICAL PLAN SHEET SYMBOLS

SYMBOL	DESCRIPTION
A	FLORESCENT LIGHTING FIXTURE
A 3	BRACKET MOUNTED INCANDESCENT OR HIGH INTENSITY DISCHARGE FIXTURE (NUMBER INDICATES LIGHTING PANEL CIRCUIT NUMBER – TYPICAL FOR ALL LIGHTING & RECEPTACLE CIRCUITS)
	SINGLE CONVENIENCE RECEPTACLE
WP	DUPLEX CONVENIENCE RECEPTACLE (WP INDICATES CAST WEATHER PROOF OUTLET BOX & COVER)
A	SINGLE SPECIAL PURPOSE RECEPTACLE (LETTER INDICATES TYPE PER SCHEDULE)
	TELEPHONE UTILITY SYSTEM OUTLET
	LIGHTING PANEL
	UTILITY METERING CABINET
	TELEPHONE UTILITY SYSTEM BACKBOARD
	DISTRIBUTION PANEL
	CABINET OR PULL BOX
	UNFUSED SAFETY SWITCH – 3P, 30A, 600V UNLESS OTHERWISE INDICATED.
30	FUSED SAFETY SWITCH – 3P, 600V, 30A MINIMUM OR AS REQUIRED TO ACCOMMODATE FUSE SIZE INDICATED
	OUTLET OR JUNCTION BOX
	COMBINATION PROTECTIVE DEVICE & MAGNETIC STARTER
	SINGLE UNIT PUSHBUTTON STATION
	2–UNIT PUSHBUTTON STATION
	3–UNIT PUSHBUTTON STATION
5	ELECTRIC MOTOR – NUMBER INDICATES HORSEPOWER
HS	"HAND–OFF–AUTOMATIC" SELECTOR SWITCH
VS	VACUUM SWITCH
LS	LIMIT SWITCH
FS	FLOW SWITCH
PS	PRESSURE SWITCH
TS	TORQUE SWITCH
PE	PNEUMATIC/ELECTRIC SWITCH
PLS	PROXIMITY LIMIT SWITCH
DS	MAGNETIC REED DOOR SWITCH

SYMBOL	DESCRIPTION
FS	FLOAT SWITCH
EP	ELECTRO–PNEUMATIC VALVE
S	SOLENOID VALVE
T	ELECTRIC THERMOSTAT
T	TEMPERATURE ACTUATED DEVICE
$	SINGLE POLE TOGGLE SWITCH
$2	DOUBLE POLE TOGGLE SWITCH
$3	3 – WAY SWITCH
$T	MANUAL MOTOR STARTER WITH THERMAL ELEMENT
	BATTERY POWERED EMERGENCY LIGHTING FIXTURE
	UNIT HEATER
	CLASS 1, DIV I, CONDUIT SEAL
	EXPOSED CONDUIT
	EXPOSED PUMP CABLE
	CONDUIT CONCEALED IN FLOOR SLAB OR UNDER FLOOR SLAB. (CONDUITS 1–1/2" OR LARGER SHALL BE INSTALLED UNDER FLOOR SLAB). CONDUITS RUN UNDER FLOOR SLAB SHALL BE ENCASED IN CONCRETE. SEE NOTE 2
	HOMERUN TO PANEL OR MCC AS NOTED
ED	CONCRETE ENCASED DUCTBANK (SECTION INDICATES CONDUIT CONFIGURATION & DESIGNATIONS)
ED	EXPOSED CONDUIT BANK
	AIR TERMINAL
	GROUND ROD & WELL

CONDUIT SYSTEM NOTESNOTED

1. ANY CONDUIT WITHOUT FURTHER DESIGNATION INDICATES 2 #12 IN 3/4" CONDUIT. GREATER NUMBER OF WIRES ARE INDICATED AS FOLLOWS. ——— (3 WIRES) ——— (4 WIRES) ETC. LONGER HASHMARK INDICATES NEUTRAL CONDUCTOR, LONGER HASHMARK WITH DOT INDICATES GROUND CONDUCTOR. NO. INDICATES WIRE SIZE WHEN OTHER THAN #12 AWG.
2. CONDUITS IMBEDDED IN STRUCTURAL CONCRETE (FLOOR SLABS, ETC.) SHALL BE SO LOCATED AS NOT TO UNDULY IMPAIR THE STRENGTH OF THE CONSTRUCTION AND SHALL BE SPACED NOT LESS THAN TWO TIMES THE CONDUIT OD BETWEEN ADJACENT CONDUITS EXCEPT WHERE CROSSING OR OTHERWISE APPROVED BY THE ENGINEER.
3. WIRING FOR LIGHTING, RECEPTACLES AND OTHER MISCELLANEOUS CIRCUITS SHALL CONFORM TO THE CIRCUITING INDICATED ON THE DRAWINGS WITH ARRANGEMENT AND ROUTING AS REQUIRED. THE WIRING SHALL BE SO ARRANGED THAT NO MORE THAN 6 CURRENT CARRYING CONDUCTORS SHALL BE INSTALLED PER CONDUIT AND CIRCUITS OF DIFFERENT PANELS SHALL BE INSTALLED IN SEPARATE RACEWAYS.

WIRING DIAGRAM SYMBOLS

SYMBOL	DESCRIPTION
	CONTACT, NORMALLY OPEN
	CONTACT, NORMALLY CLOSED
	PUSHBUTTON, NORMALLY CLOSED
	PUSHBUTTON, NORMALLY OPEN
	SELECTOR SWITCH
OL'S X2	OVERLOADS
	FUSE
G	PILOT LIGHT, PUSH TO TEST
M	AUXILIARY STARTER CONTACTS
	PRESSURE SWITCH, OPENS ON RISE
	PRESSURE SWITCH, CLOSES ON RISE
	LIMIT SWITCH, NORMALLY CLOSED
	LIMIT SWITCH, NORMALLY OPEN
	LIMIT SWITCH, NORMALLY OPEN, HELD CLOSED
	LIMIT SWITCH, NORMALLY CLOSED, HELD OPEN
	TEMPERATURE ACTUATED SWITCH, OPENS ON RISE
	TEMPERATURE ACTUATED SWITCH, CLOSES ON RISE
	VACUUM SWITCH, OPENS ON RISE
	VACUUM SWITCH, CLOSES ON RISE
	FLOAT OPERATED SWITCH, OPENS ON RISE
	FLOAT OPERATED SWITCH, CLOSES ON RISE
	THERMAL OVERLOAD
	GROUND CONNECTION
	SOLENOID
G M	MOTORIZED TIME DELAY RELAY
TD	TIME DELAY RELAY
TD O–O–X	TIME DELAY CONTACT (O=OPEN, X=CLOSED, DESIGNATION INDICATES CONTACT POSITION WHEN RELAY IS RESET–TIMING–TIMED OUT)
R	AUXILIARY RELAY
ETM	ELAPSED TIME METER
	CONTROL POWER TRANSFORMER
M	MOTOR STARTER OPERATING COIL

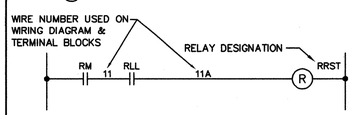

SINGLE LINE DIAGRAM SYMBOLS

SYMBOL	DESCRIPTION
	SEPARABLE CONTACTS
	CIRCUIT BREAKER
	COMBINATION MOTOR STARTER
V	VOLTMETER
VS	VOLTMETER SWITCH
A	AMMETER
AS	AMMETER SWITCH
300:5	CURRENT TRANSFORMER (CT) DESIGNATION INDICATES QUANTITY & RATIO
	POTENTIAL TRANSFORMER
	LIGHTING TRANSFORMER
	POWER FACTOR CORRECTION CAPACITOR
47	PHASE FAILURE/UNDERVOLTAGE MONITOR RELAY
	FUSE
	MOTOR OVERLOAD
	FUSED DISCONNECT SWITCH

ABBREVIATIONS

A	AMP	NEUT	NEUTRAL
ADJ	ADJUSTABLE	N.O.	NORMALLY OPEN
AFF	ABOVE FINISHED FLOOR	OL	OVERLOAD
AI	ANALOG INPUT	P	POLE
ALT	ALTERNATOR	PFR	PHASE FAILURE RELAY
AO	ANALOG OUTPUT	PLC	PROGRAMMABLE LOGIC CONTROLLER
APSL	AIR PRESSURE SWITCH LOW	POS	POSITION
C	CONDUIT	PRV	PRESSURE REDUCING VALVE
CA	CABLE	PVC	POLYVINYL CHLORIDE
CAB	CABINET	PVC RGS	PVC COATED RIGID GALV CONDUIT
CAT.	CATALOG	PWR	POWER
CB	CIRCUIT BREAKER	R	RELAY
CKT	CIRCUIT	RAPSL	AIR PRESSURE SWITCH LOW RELAY
COMM	COMMUNICATIONS	REE	ELEC BLDG ENTRY AUX RELAY
CONT	CONTINUED	RGS	RIGID GALVANIZED CONDUIT
CPT–N	CONTROL POWER TRANSFORMER NEUTRAL	RHLA	HIGH LEVEL ALARM RELAY
CPU	CENTRAL PROCESSING UNIT	RLH	HIGH LEVEL AUX RELAY
CT	CURRENT TRANSFORMER	RLL	LOW LEVEL AUX RELAY
CU	COPPER	RM	PUMP RUN AUX RELAY
CW	COOL WHITE	RMOR	MOTOR OVERLOAD AUX RELAY
DI	DISCRETE INPUT	RMTH	MOTOR TEMPERATURE RELAY
DIREC	DIRECTIONAL	RPLD	RUN PUMP LEAD RELAY
DIV	DIVISION	RPL1	RUN PUMP LAG 1 RELAY
DN	DOWN	RPL2	RUN PUMP LAG 2 RELAY
DO	DISCRETE OUTPUT	RPL3	RUN PUMP LAG 3 RELAY
ETM	ELAPSED TIME METER	RPL4	RUN PUMP LAG 4 RELAY
G.E.	GENERAL ELECTRIC	RPDLD	RUN PUMP DRY LEAD RELAY
GFI	GROUND FAULT INTERRUPT	RPDL1	RUN PUMP DRY LAG 1 RELAY
GND	GROUND	RPLD1	RUN PUMP DRY LAG 1 RELAY
HL&P	HOUSTON LIGHTING & POWER	RPLD2	RUN PUMP DRY LAG 2 RELAY
H–O–A	HAND OFF AUTO	RPLC	PLC MODE AUX RELAY
HPS	HIGH PRESSURE SODIUM	RPLCOR	PLC OVERRIDE
INC	INCANDESCENT	RPLM	PLC PUMP RUN RELAY
JB	JUNCTION BOX	RPLMP	BACKUP SYSTEM RUN RELAY
KA SYM	THOUSAND AMPS SYMMETRICAL	RR	RUN RELAY
KS	KEY SWITCH	RRST	PUMP RESET AUX RELAY
KVA	KILO–VOLT–AMPS	RTAH	TEMPERATURE ALARM AUX RELAY
L	LINE	RUV	UNDERVOLTAGE AUX RELAY
LIS	LEVEL INDICATING SWITCH	RWD	WATCHDOG RELAY
LISH	LEVEL INDICATING SWITCH HIGH	SEC	SECONDS
LISL	LEVEL INDICATING SWITCH LOW	SL	SEAL LEAK SWITCH
LS	LIMIT SWITCH	SN	SOLID NEUTRAL
LV	LOW VOLTAGE	SP	SURGE PROTECTOR
LVN	LOW VOLTAGE NEUTRAL	SPST	SINGLE POLE SINGLE THROW
M	MOTOR RUN CONTACT	SS	SELECTOR SWITCH
mA	MILLIAMPERE	SW	SWITCH
MA	MILLIAMPERE	SWBT	SOUTHWESTERN BELL TELEPHONE
MADC	MILLIAMPERE DIRECT CURRENT	TEMP	TEMPERATURE
MCC	MOTOR CONTROL CENTER	TD	TIME DELAY RELAY
MCP	MOTOR CIRCUIT PROTECTOR	TDLP	LOSS OF POWER TIME DELAY RELAY
MIN.	MINUTES	TDRM	PUMP TIME DELAY RELAY
MOR	MOTOR OVERLOAD RELAY	UPS	UNINTERRUPTED POWER SUPPLY
mS	MILLISECOND	V	VOLTS
MTH	MOTOR TEMPERATURE SWITCH	VA	VOLT–AMP
N	NEUTRAL	VAC	VOLTS ALTERNATING CURRENT
NA	NANOAMPERE	VDC	VOLTS DIRECT CURRENT
N.C.	NORMALLY CLOSED	W	WATT OR WIRE
NEC	NATIONAL ELECTRICAL CODE	WM	WATT MISER (HIGH Z LAMP)

LIGHTING FIXTURE SCHEDULE

INCANDESCENT & HIGH INTENSITY DISCHARGE					FLUORESCENT				
TYPE	MFG & CATALOG NO.	LAMP SIZE	TYPE	REMARKS	TYPE	MFG & CATALOG NO.	LAMP SIZE	MOUNTING	REMARKS

EMERGENCY LIGHTING FIXTURE SCHEDULE

TYPE	MFG & CATALOG NO.	DESCRIPTION

REV NO	DESCRIPTION	APP'D	DATE

SEAL

STATE OF TEXAS
LARRY M. BARFIELD
39337
REGISTERED PROFESSIONAL ENGINEER
2-23-99

SEAL

AS-BUILT

CH2M HILL
7600 West Tidwell Road, Suite 400
Houston Tx 77040
713.462.0161

Binkley & Barfield, Inc.
Consulting Engineers
1710 Seamist Drive Houston, Texas 77008

ALMEDA SIMS
BIOSOLIDS
DRYER REHABILITATION

GFS NO: 0298–05–3
FILE NO: 4289–4

ELECTRICAL SYMBOLS, LEGEND LIGHTING FIXTURE SCHEDULES AND ABBREVIATIONS

CITY OF HOUSTON

DEPARTMENT OF PUBLIC WORKS AND ENGINEERING
ENGINEERING, CONSTRUCTION AND REAL ESTATE GROUP

SECTION APPROVALS

WATER ENGINEERING

TRAFFIC AND SIGNAL ENGINEERING

WASTEWATER ENGINEERING — 2-25-99

STREET & BRIDGE ENGINEERING

STORMWATER ENGINEERING

CONSTRUCTION — 3/2/99

2-25-99

OTHER DEPARTMENTS

PLANNING AND DEVELOPMENT

SPONSOR DEPARTMENT

CITY ENGINEER — 3-2-99 DATE

DIRECTOR OF PUBLIC WORKS AND ENGINEERING — 3/5/99 DATE

SUBMITTED:
SCALE: NONE
NONE
DATE:
SURVEY BY:
F B NO:

DESIGNED BY: DJR
DRAWN BY: AAA
DWG. NO. : E–01
SHT NO 144 of 159 SHTS
CITY DWG NO: 35001

CADD DWG FILE NO F:/64305/
ORIGINAL SCALE IN INCHES FOR REDUCED PLANS
0 1 2 3

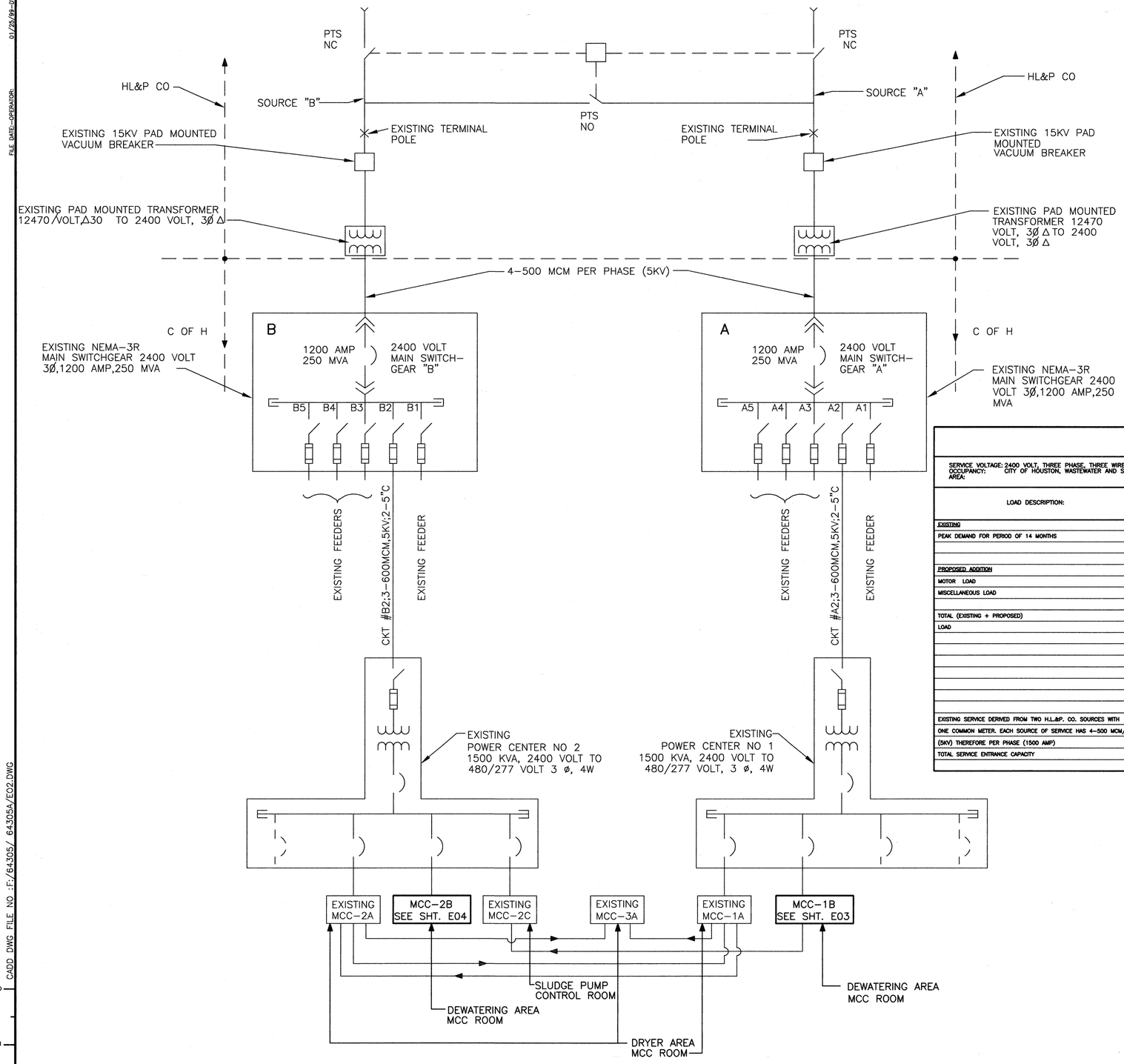

KEY PLAN

ELECTRICAL LOAD ANALYSIS

SERVICE VOLTAGE: 2400 VOLT, THREE PHASE, THREE WIRE (EXISTING)
OCCUPANCY: CITY OF HOUSTON, WASTEWATER AND SLUDGE DISPOSAL FACILITY
AREA:

LOAD DESCRIPTION:	NEC CODE LOAD (KVA)	CONNECTED LOAD (KVA)	DIVERSITY FACTOR	DESIGN LOAD: KVA	PHASE "A" AMPS	PHASE "B" AMPS	PHASE "C" AMPS	NEUTRAL AMPS	REMARKS:
EXISTING									
PEAK DEMAND FOR PERIOD OF 14 MONTHS	* 3076		1.25	3845	925	925	925	–	*PER H.L.&P. CO.
PROPOSED ADDITION									
MOTOR LOAD		48	1.00	48	12	12	12	–	
MISCELLANEOUS LOAD		30	1.00	30	9	9	9	–	
TOTAL (EXISTING + PROPOSED)				4091	986	986	986	–	
LOAD									
EXISTING SERVICE DERIVED FROM TWO H.L.&P. CO. SOURCES WITH ONE COMMON METER. EACH SOURCE OF SERVICE HAS 4–500 MCM/Ø (5KV) THEREFORE PER PHASE (1500 AMP)									
TOTAL SERVICE ENTRANCE CAPACITY					3000	3000	3000	–	

REV NO	DESCRIPTION	APP'D	DATE

SEAL

STATE OF TEXAS
LARRY M. BARFIELD
39337
REGISTERED PROFESSIONAL ENGINEER
2-23-99

SEAL

AS-BUILT

CH2M HILL
7600 West Tidwell Road, Suite 400
Houston Tx 77040
713.462.0161

Binkley & Barfield, Inc.
Consulting Engineers
1710 Seamist Drive Houston, Texas 77008

ALMEDA SIMS
BIOSOLIDS
DRYER REHABILITATION

GFS NO: 0298–05–3
FILE NO: 4289–4

ELECTRICAL POWER DISTRIBUTION ONE LINE DIAGRAM – KEY PLAN

CITY OF HOUSTON

DEPARTMENT OF PUBLIC WORKS AND ENGINEERING
ENGINEERING, CONSTRUCTION AND REAL ESTATE GROUP

SECTION APPROVALS

WATER ENGINEERING

TRAFFIC AND SIGNAL ENGINEERING

WASTEWATER ENGINEERING 2-25-99

STREET & BRIDGE ENGINEERING

STORMWATER ENGINEERING

CONSTRUCTION 3/2/99

2/26/99

OTHER DEPARTMENTS

PLANNING AND DEVELOPMENT

SPONSOR DEPARTMENT

CITY ENGINEER 3-2-99 DATE

DIRECTOR OF PUBLIC WORKS AND ENGINEERING 3/5/99 DATE

SUBMITTED:
SCALE: NONE
NONE
DATE:
SURVEY BY:
F B NO:

DESIGNED BY: KKS
DRAWN BY: AAA
DWG. NO. : E–02
SHT NO 145 of 159 SHTS

CITY DWG NO: 35001

01/25/99–DVB
FILE DATE–OPERATOR:

CADD DWG FILE NO :F:/64305/ 64305A/E02.DWG

ORIGINAL SCALE IN INCHES FOR REDUCED PLANS
0 1 2 3

FILE DATE--OPERATOR: 01/25/99--DVB

EXISTING MCC-1B 1200 AMP, 480V, 3 0 COPPER BUSS BRACED FOR 42.000 AMPERES RMS, SYMMETRICAL

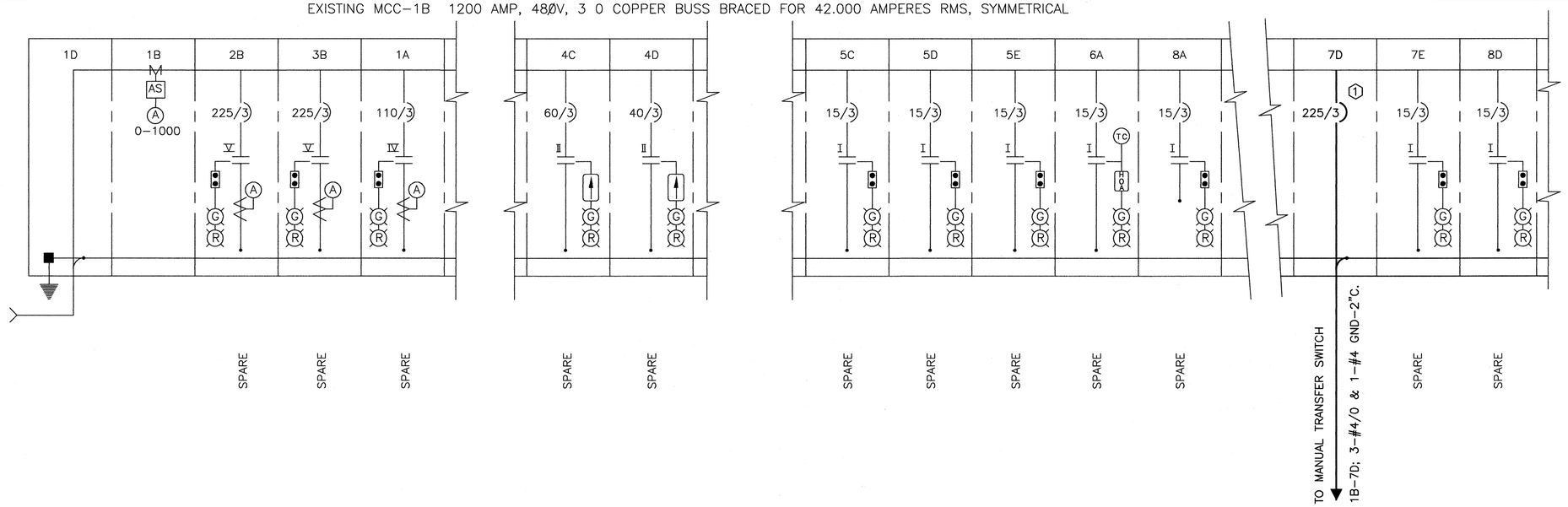

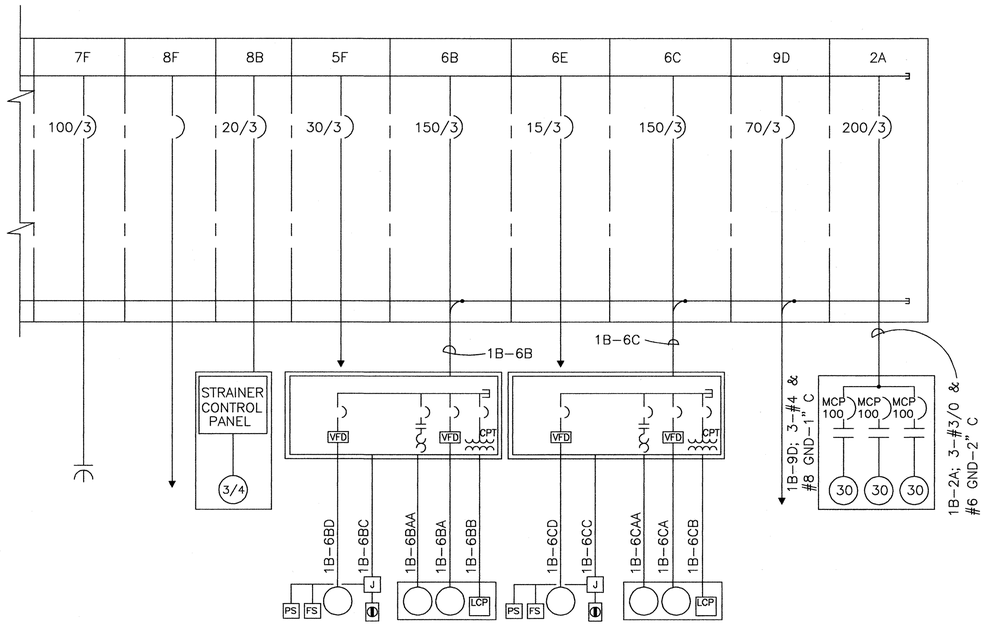

NOTES:

1. REMOVE EXISTING STARTER AND MCP FROM 7D AND INSTALL NEW 225 AMP, 480 VOLT, 3 POLE BREAKER FOR THE NEW MANUAL TRANSFER SWITCH.

REV NO	DESCRIPTION	APP'D	DATE

SEAL

STATE OF TEXAS
LARRY M. BARFIELD
39337
REGISTERED PROFESSIONAL ENGINEER
2-23-99

SEAL

AS-BUILT

CH2M HILL
7600 West Tidwell Road, Suite 400
Houston Tx 77040
713.462.0161

Binkley & Barfield, Inc.
Consulting Engineers
1710 Seamist Drive Houston, Texas 77008

ALMEDA SIMS
BIOSOLIDS
DRYER REHABILITATION

GFS NO: 0298-05-3
FILE NO: 4289-4

ELECTRICAL
ONE LINE DIAGRAM
MOTOR CONTROL CENTER 1B

CITY OF HOUSTON

DEPARTMENT OF PUBLIC WORKS AND ENGINEERING
ENGINEERING, CONSTRUCTION AND REAL ESTATE GROUP

SECTION APPROVALS

WATER ENGINEERING

TRAFFIC AND SIGNAL ENGINEERING

WASTEWATER ENGINEERING 2-23-99

STREET & BRIDGE ENGINEERING

STORMWATER ENGINEERING

CONSTRUCTION 3/2/99

3/2/99

OTHER DEPARTMENTS

PLANNING AND DEVELOPMENT

SPONSOR DEPARTMENT

CITY ENGINEER 3-2-99 DATE

DIRECTOR OF PUBLIC WORKS AND ENGINEERING 3/5/99 DATE

SUBMITTED:
SCALE: NONE
DATE:
SURVEY BY:
F B NO:

DESIGNED BY: KKS
DRAWN BY: AAA
DWG. NO. : E-03
SHT NO 146 of 159 SHTS

CITY DWG NO: 35001

ORIGINAL SCALE IN INCHES FOR REDUCED PLANS 0 1 2 3

CADD DWG FILE NO :F:/64305/ 64305A/E03.DWG

0 1 2 3 ORIGINAL SCALE IN INCHES FOR REDUCED PLANS

FILE DATE-OPERATOR: 01/22/99-RPD/FG

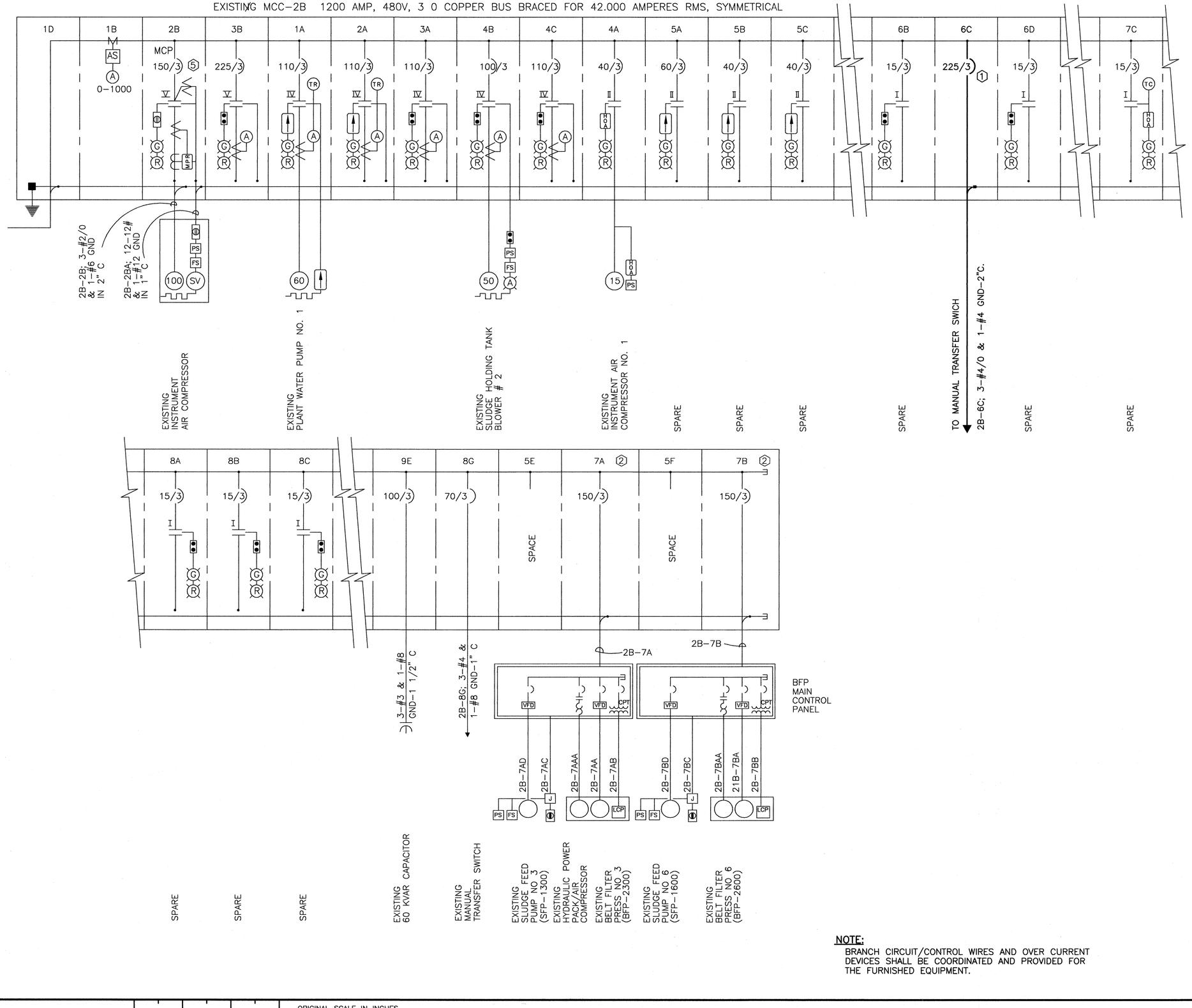

NOTES:

1. REMOVE EXISTING STARTER AND MCP FROM 6C AND INSTALL NEW 225 AMP, 480 VOLT, 3 POLE BREAKER FOR THE NEW MANUAL TRANSFER SWITCH.

NOTE:
BRANCH CIRCUIT/CONTROL WIRES AND OVER CURRENT DEVICES SHALL BE COORDINATED AND PROVIDED FOR THE FURNISHED EQUIPMENT.

REV NO	DESCRIPTION	APP'D	DATE

SEAL

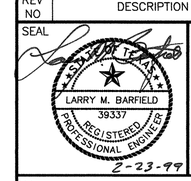

SEAL

AS-BUILT

CH2M HILL
7600 West Tidwell Road, Suite 400
Houston Tx 77040
713.462.0161

Binkley & Barfield, Inc.
Consulting Engineers
1710 Seamist Drive Houston, Texas 77008

ALMEDA SIMS
BIOSOLIDS
DRYER REHABILITATION

GFS NO: 0298-05-3
FILE NO: 4289-4

ELECTRICAL ONE LINE DIAGRAM MOTOR CONTROL CENTER 2B

CITY OF HOUSTON

DEPARTMENT OF PUBLIC WORKS AND ENGINEERING
ENGINEERING, CONSTRUCTION AND REAL ESTATE GROUP

SECTION APPROVALS

WATER ENGINEERING

TRAFFIC AND SIGNAL ENGINEERING

WASTEWATER ENGINEERING 2-25-99

STREET & BRIDGE ENGINEERING

STORMWATER ENGINEERING

CONSTRUCTION 3/2/99

2/25/99

OTHER DEPARTMENTS

PLANNING AND DEVELOPMENT

SPONSOR DEPARTMENT

CITY ENGINEER 3-2-99
DATE

DIRECTOR OF PUBLIC WORKS AND ENGINEERING 3/5/99
DATE

SUBMITTED:
SCALE: NONE
DATE:
SURVEY BY:
F B NO:

DESIGNED BY: KKS
DRAWN BY: RPD
DWG. NO. : E-04
SHT NO 147 of 159 SHTS

CITY DWG NO: 35001

CADD DWG FILE NO :F:/64305/ 64305A E-04.DWG

ORIGINAL SCALE IN INCHES FOR REDUCED PLANS
0 1 2 3

ORIGINAL SCALE IN INCHES FOR REDUCED PLANS
0 1 2 3

FILE DATE--OPERATOR: 01/25/99--RPD

1	2	3	4	5	6	7	8	9
1A SPARE	2A PLANT WATER PUMP NO.3 (TRIPLEX)	3A SLUDGE HOLDING TANK BLOWER NO.3	4A INSTRUMENT AIR COMPRESSOR NO.2	5A ROOF VENT FAN NO.1	6A SPARE	7A POLYMER PUMP NO.1	8A SPARE	9A SPARE
			4B INSTRUMENT AIR COMPRESSOR NO.3	5B ROOF VENT FAN NO.3	6B BELT FILTER PRESS NO.2	7B MONORAIL	8B STRAINER	9B SPARE
			4C SPARE	5C SPARE		7C 7.4 HP FLYGT PUMP	8C 120/240 VOLT 1PHASE CIRCUITS	
1B METER COMP.	2B	3B				7D (1) TRANSFER SWITCH NO. 2 FEEDER	8D FLOCCULATOR NO.4 SPARE	9C FILTER AIRLIFT PUMP NO.1
1C CONNECTION FOR MONO RAIL			4D SPARE	5D SPARE	6C BELT FILTER PRESS NO.4	7E SPARE	8E SPARE	
1D INCOMING LINE	SPARE	SPARE	4E PLANT AIR COMPRESSOR NO.1	5E SPARE	6D SPARE	7F CAPACITOR BKR	8F STANDBY FDR TO MCC-2C	9D TRANSFER SWITCH FDR → NO. 1
			4F PLANT AIR COMPRESSOR NO.3	5F SPARE	6E SPARE			9E FILTRATE PIT BLOWER

ELEVATION
MOTOR CONTROL CENTER-1B (EXISTING)

1	2	3	4	5	6	7	8	9
1A PLANT WATER PUMP NO.1	2A SPARE	3A	4A INSTRUMENT AIR COMPRESSOR NO.1	5A SPARE	6A ROOF VENT FAN NO.2	7A BELT PRESS NO. 3	8A SPARE	9A FILTRATE BLOWER NO.2
			4B SLUDGE HOLDING TANK BLOWER NO.2	5B SPARE	6B SPARE	7B BELT FILTER PRESS NO. 6	8B SPARE	
		SPARE		5C SPARE	6C (1) TRANSFER SWITCH NO. 2 FEEDER		8C SPARE	9B LIGHTING PANEL FEED
1B METER	2B NEW AIR COMPRESSOR	3B						9C 480 VOLT RECEPTACLE IN EQUIP RM
1C MONO RAIL			4C	5D PLANT AIR COMPRESSOR NO.2	6D SPARE	7C	8D SPARE	9D
1D INCOMING LINE		SPARE	SPARE	5E SPARE	6E FCU-1	SPARE 7D SPARE	8E JIB CRANE 8F SUMP PUMP	9E CAPACITOR BKR
				5F ACCU-1	6F POLYMER PUMP NO.2		8G TRANSFER SWITCH NO.1 FDR.	

ELEVATION
MOTOR CONTROL CENTER-2B (EXISTING)

NOTES:

(1) REMOVE EXISTING STARTER AND INSTALL FEEDER BREAKER FOR TRANSFER SWITCH NO. 2.

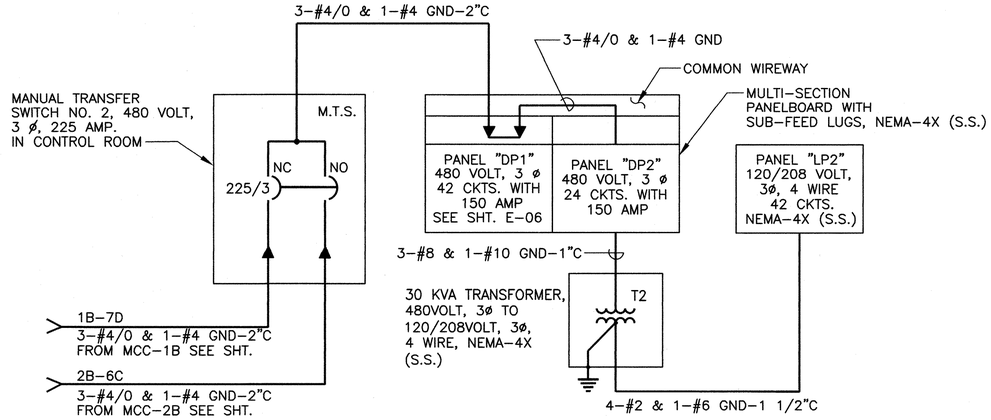

RISER DIAGRAM MANUAL TRANSFER SWITCH AND PANEL "DP1" AND "DP2"

POWER DISTRIBUTION PANEL "DP2"

NEMA 4X - STAINLESS STEEL;
MULTISECTION PANEL BOARD WITH SUB-FEED LUGS.

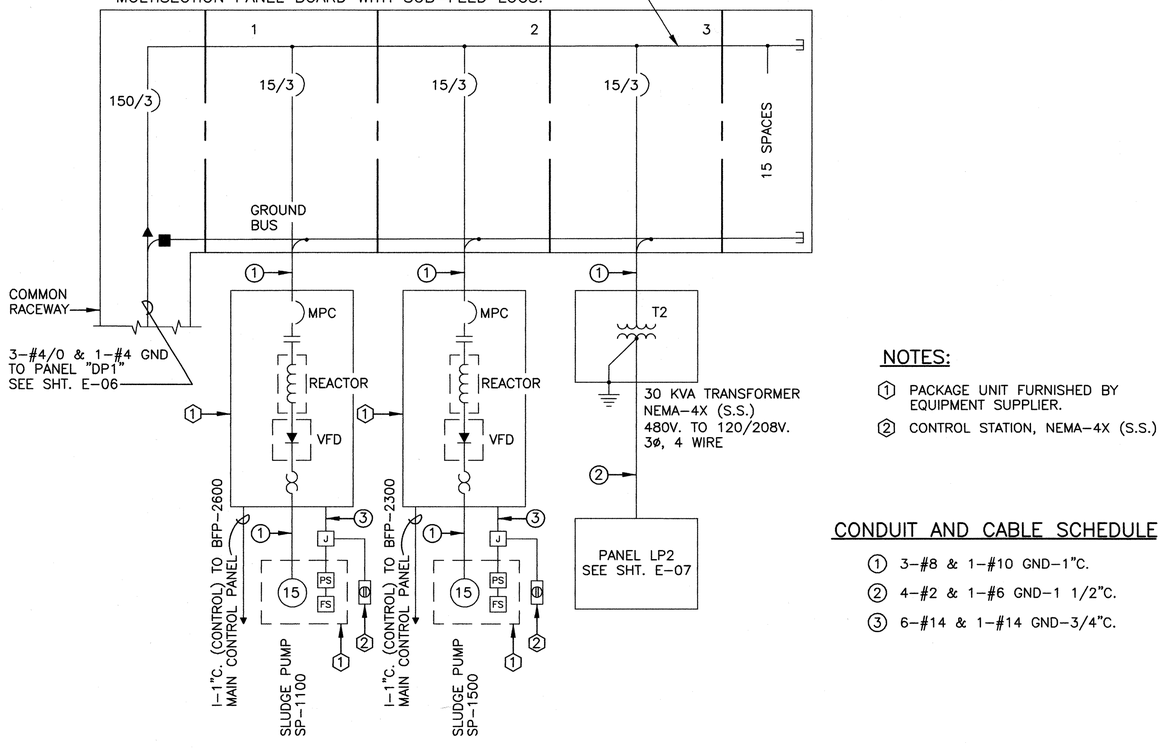

NOTES:

(1) PACKAGE UNIT FURNISHED BY EQUIPMENT SUPPLIER.
(2) CONTROL STATION, NEMA-4X (S.S.)

CONDUIT AND CABLE SCHEDULE

(1) 3-#8 & 1-#10 GND-1"C.
(2) 4-#2 & 1-#6 GND-1 1/2"C.
(3) 6-#14 & 1-#10 GND-3/4"C.

REV NO	DESCRIPTION	APP'D	DATE

SEAL
STATE OF TEXAS
LARRY M. BARFIELD
39337
REGISTERED PROFESSIONAL ENGINEER
2-25-99

SEAL
AS-BUILT

CH2M HILL
7600 West Tidwell Road, Suite 400
Houston Tx 77040
713.462.0161

Binkley & Barfield, Inc.
Consulting Engineers
1710 Seamist Drive Houston, Texas 77008

ALMEDA SIMS
BIOSOLIDS
DRYER REHABILITATION

GFS NO: 0298-05-3
FILE NO: 4289-4

ELECTRICAL
RISER DIAGRAM
AND MCC ELEVATIONS

CITY OF HOUSTON
DEPARTMENT OF PUBLIC WORKS AND ENGINEERING
ENGINEERING, CONSTRUCTION AND REAL ESTATE GROUP

SECTION APPROVALS

WATER ENGINEERING
TRAFFIC AND SIGNAL ENGINEERING
WASTEWATER ENGINEERING 2-25-99
STREET & BRIDGE ENGINEERING
STORMWATER ENGINEERING
CONSTRUCTION 2/2/99
2/25/99

OTHER DEPARTMENTS

PLANNING AND DEVELOPMENT
SPONSOR DEPARTMENT
CITY ENGINEER 3-2-99 DATE
DIRECTOR OF PUBLIC WORKS AND ENGINEERING 3/5/99 DATE

SUBMITTED:
SCALE: NONE
DATE:
SURVEY BY:
F B NO:

DESIGNED BY: KKS
DRAWN BY: AAA
DWG. NO. : E-05
SHT NO 148 of 159 SHTS
CITY DWG NO: 35001

CADD DWG FILE NO :F:/64305/64305#E05.DWG

ORIGINAL SCALE IN INCHES FOR REDUCED PLANS
0 1 2 3

ORIGINAL SCALE IN INCHES FOR REDUCED PLANS
0 1 2 3

FILE DATE-OPERATOR: 01/29/99-RPD

POWER DISTRIBUTION PANEL "DP1"

NEMA 4X – STAINLESS STEEL; MULTISECTION PANEL BOARD WITH SUB-FEED LUGS. 480V., 3ø,3W., 225A, MAIN BUS COPPER, BRACED FOR 22,000 RMS, SYMMETRICAL, AMPS.

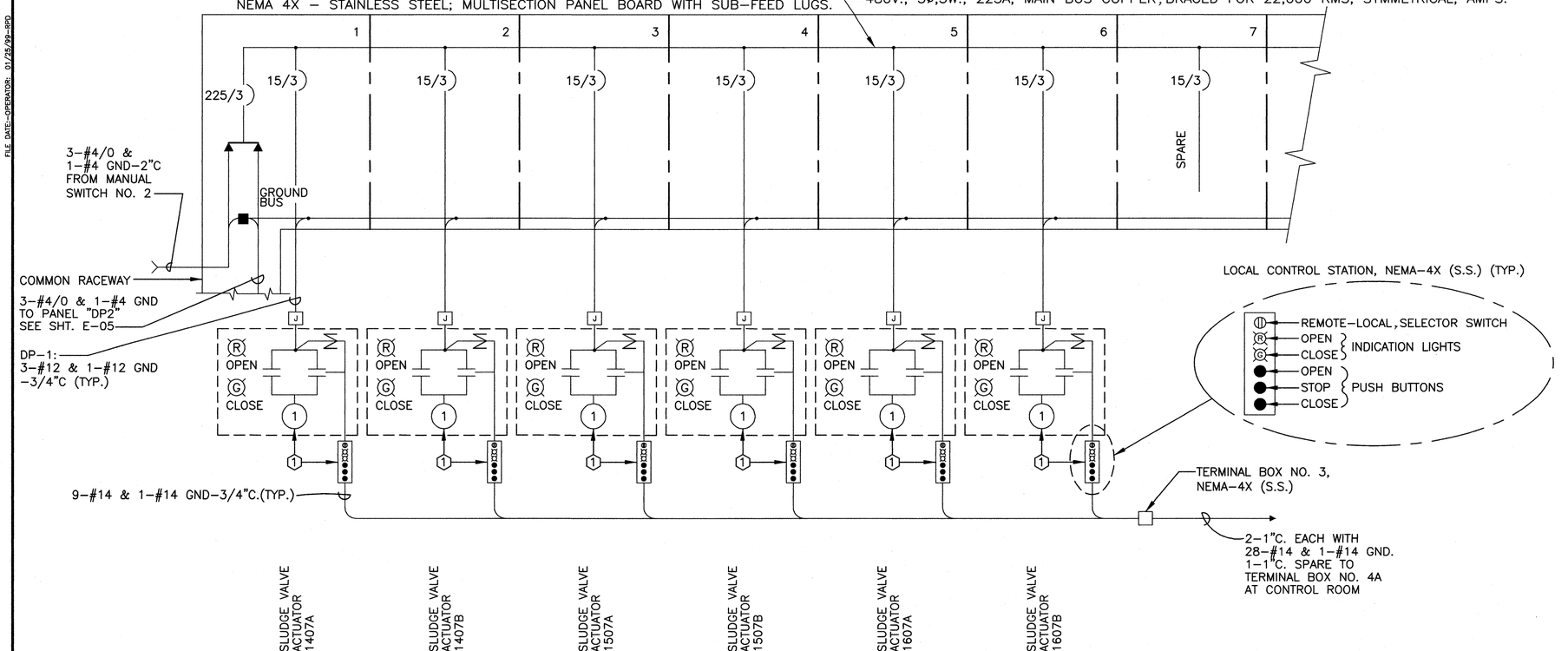

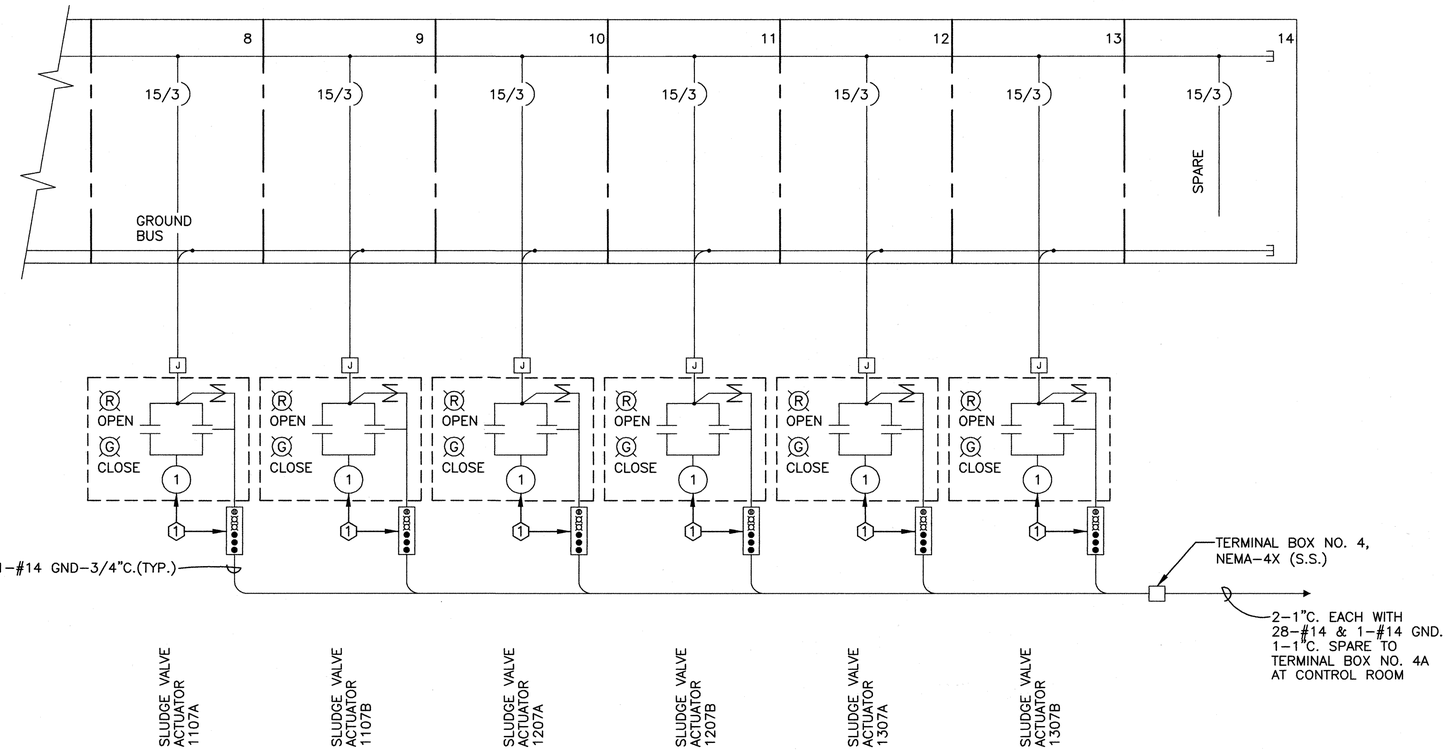

NOTES:

1. PACKAGE UNIT FURNISHED BY EQUIPMENT SUPPLIER WITH LOCAL CONTROL STATION.

REV NO	DESCRIPTION	APP'D	DATE

SEAL

STATE OF TEXAS
LARRY M. BARFIELD
39337
REGISTERED PROFESSIONAL ENGINEER
2-23-99

SEAL

AS-BUILT

CH2M HILL
7600 West Tidwell Road, Suite 400
Houston Tx 77040
713.462.0161

Binkley & Barfield, Inc.
Consulting Engineers
1710 Seamist Drive Houston, Texas 77008

ALMEDA SIMS
BIOSOLIDS
DRYER REHABILITATION

GFS NO: 0298-05-3
FILE NO: 4289-4

ELECTRICAL
ONE LINE DIAGRAM
SLUDGE VALVE ACTUATORS

CITY OF HOUSTON

DEPARTMENT OF PUBLIC WORKS AND ENGINEERING
ENGINEERING, CONSTRUCTION AND REAL ESTATE GROUP

SECTION APPROVALS

WATER ENGINEERING

TRAFFIC AND SIGNAL ENGINEERING

WASTEWATER ENGINEERING 2-25-99

STREET & BRIDGE ENGINEERING

STORMWATER ENGINEERING

CONSTRUCTION 3/2/99

2/25/99

OTHER DEPARTMENTS

PLANNING AND DEVELOPMENT

SPONSOR DEPARTMENT

CITY ENGINEER 3-2-99 DATE

DIRECTOR OF PUBLIC WORKS AND ENGINEERING 3/5/99 DATE

SUBMITTED:
SCALE: NONE
DATE:
SURVEY BY:
F B NO:

DESIGNED BY: KKS
DRAWN BY: LTG
DWG. NO. : E-06
SHT NO 149 of 159 SHTS

CITY DWG NO: 35001

CADD DWG FILE NO. :F:/64305/64305A/E06.DWG
ORIGINAL SCALE IN INCHES FOR REDUCED PLANS
0 1 2 3

FILE DATE--OPERATOR: 02/23/99--DVB

PANEL "LP2"

NEMA 4X – STAINLESS STEEL; PANEL BOARD.

120/208V., 3ø,4W., 150A, MAIN BUS COPPER BRACED FOR 10,000 RMS, SYMMETRICAL, AMPS.

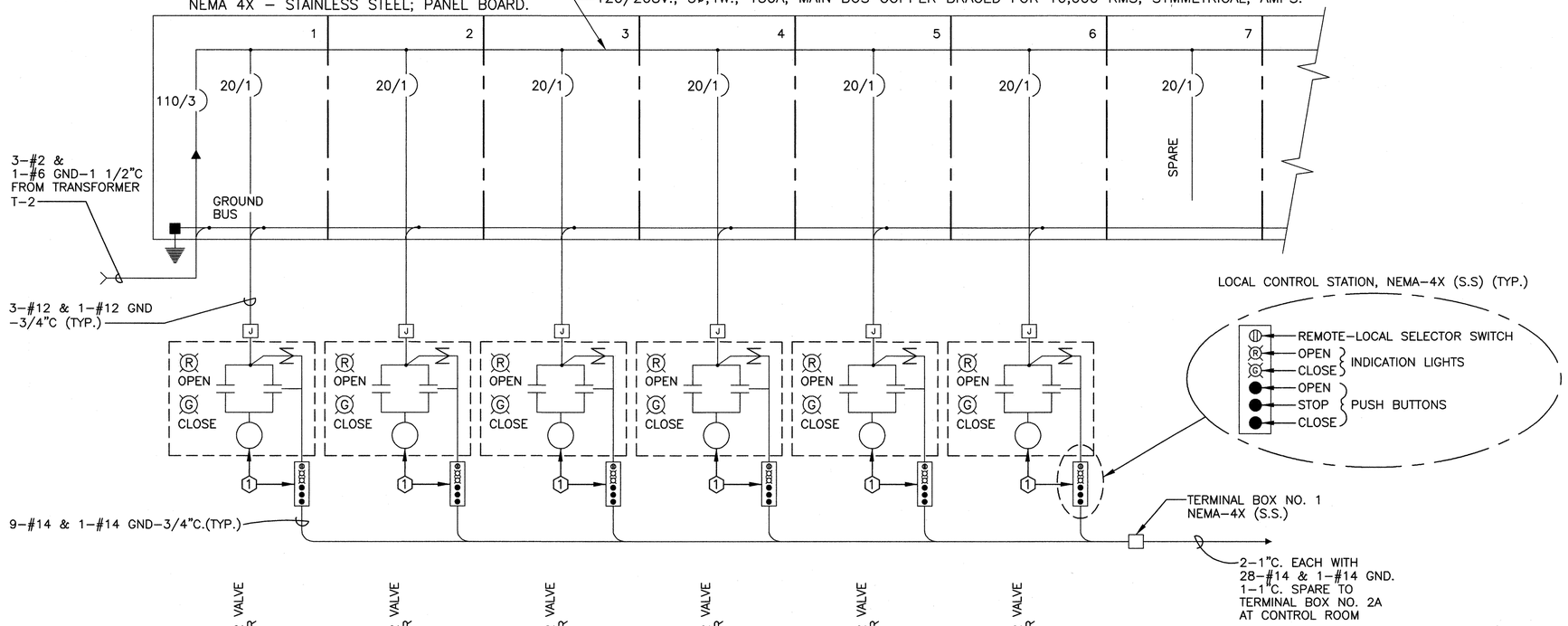

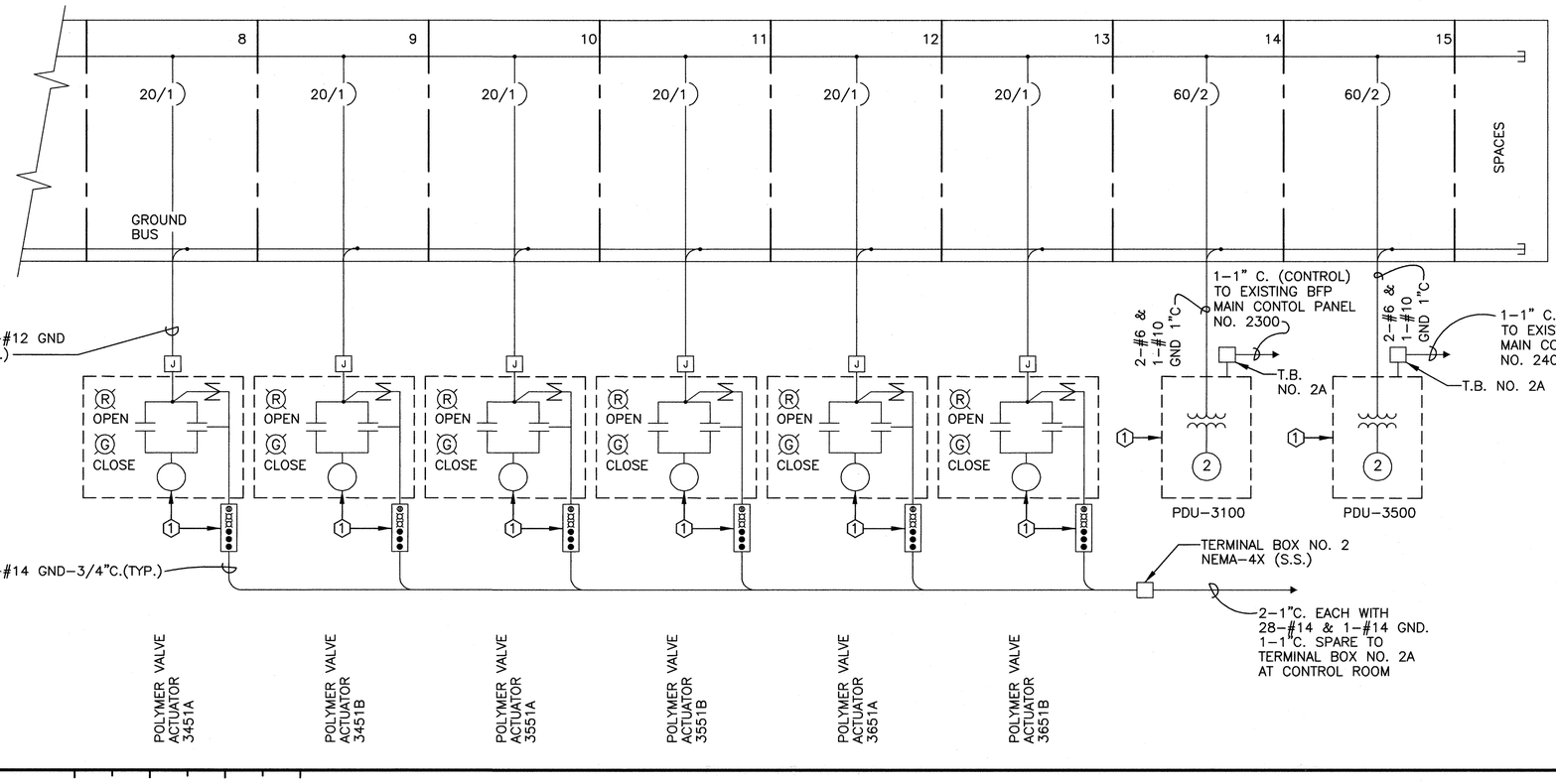

NOTES:

1. PACKAGE UNIT FURNISHED BY EQUIPMENT SUPPLIER WITH LOCAL CONTROL STATION.

REV NO	DESCRIPTION	APP'D	DATE

SEAL

STATE OF TEXAS
LARRY M. BARFIELD
39337
REGISTERED PROFESSIONAL ENGINEER
2-23-99

SEAL

AS-BUILT

CH2M HILL
7600 West Tidwell Road, Suite 400
Houston Tx 77040
713.462.0161

Binkley & Barfield, Inc.
Consulting Engineers
1710 Seamist Drive Houston, Texas 77008

ALMEDA SIMS BIOSOLIDS DRYER REHABILITATION

GFS NO: 0298-05-3
FILE NO: 4289-4

ELECTRICAL ONE LINE DIAGRAM POLYMER VALVE ACTUATORS

CITY OF HOUSTON

DEPARTMENT OF PUBLIC WORKS AND ENGINEERING
ENGINEERING, CONSTRUCTION AND REAL ESTATE GROUP

SECTION APPROVALS

WATER ENGINEERING

TRAFFIC AND SIGNAL ENGINEERING

WASTEWATER ENGINEERING 2-25-99

STREET & BRIDGE ENGINEERING

STORMWATER ENGINEERING

CONSTRUCTION 3/26/99

2/25/99

OTHER DEPARTMENTS

PLANNING AND DEVELOPMENT

SPONSOR DEPARTMENT

CITY ENGINEER 3-2-99 DATE

DIRECTOR OF PUBLIC WORKS AND ENGINEERING 3/5/99 DATE

SUBMITTED:
SCALE: NONE
DATE:
SURVEY BY:
F B NO:

DESIGNED BY: KKS
DRAWN BY: LTG
DWG. NO. : E-07
SHT NO 150 of 159 SHTS

CITY DWG NO: 35001

ORIGINAL SCALE IN INCHES FOR REDUCED PLANS
0 1 2 3
CADD DWG FILE NO.:F:/64305/64305A/E07.DWG

FILE DATE—OPERATOR: 01/22/99—DVB

GENERAL NOTES:

1. EXACT LOCATIONS OF CONDUIT STUB-UPS SHALL BE COORDINATED WITH THE FURNISHED EQUIPMENT.
2. HORIZONTAL RUNS OF CONDUITS SHALL BE SUPPORTED BY PVC COATED GALVANIZED STEEL HANGERS FROM CEILING AND VERTICAL DROPS TO EQUIPMENT SHALL BE SUPPORTED BY PVC COATED UNISTRUT FROM FLOOR TO CEILING.

CONDUIT & CABLE SCHEDULE		
TAG	DESCRIPTION	REMARKS
①	1-3/4" C (CONTROL) 2-#14 & 1-#14 GND	
②	1-3/4" C (CONTROL) 4-#14 & 1-#14 GND	TO VFD-1100 & 1500
③	1-3/4" C (CONTROL) 9-#14 & 1-#14 GND	TO LOCAL CONTROL STATION SEE NOTE ① ②

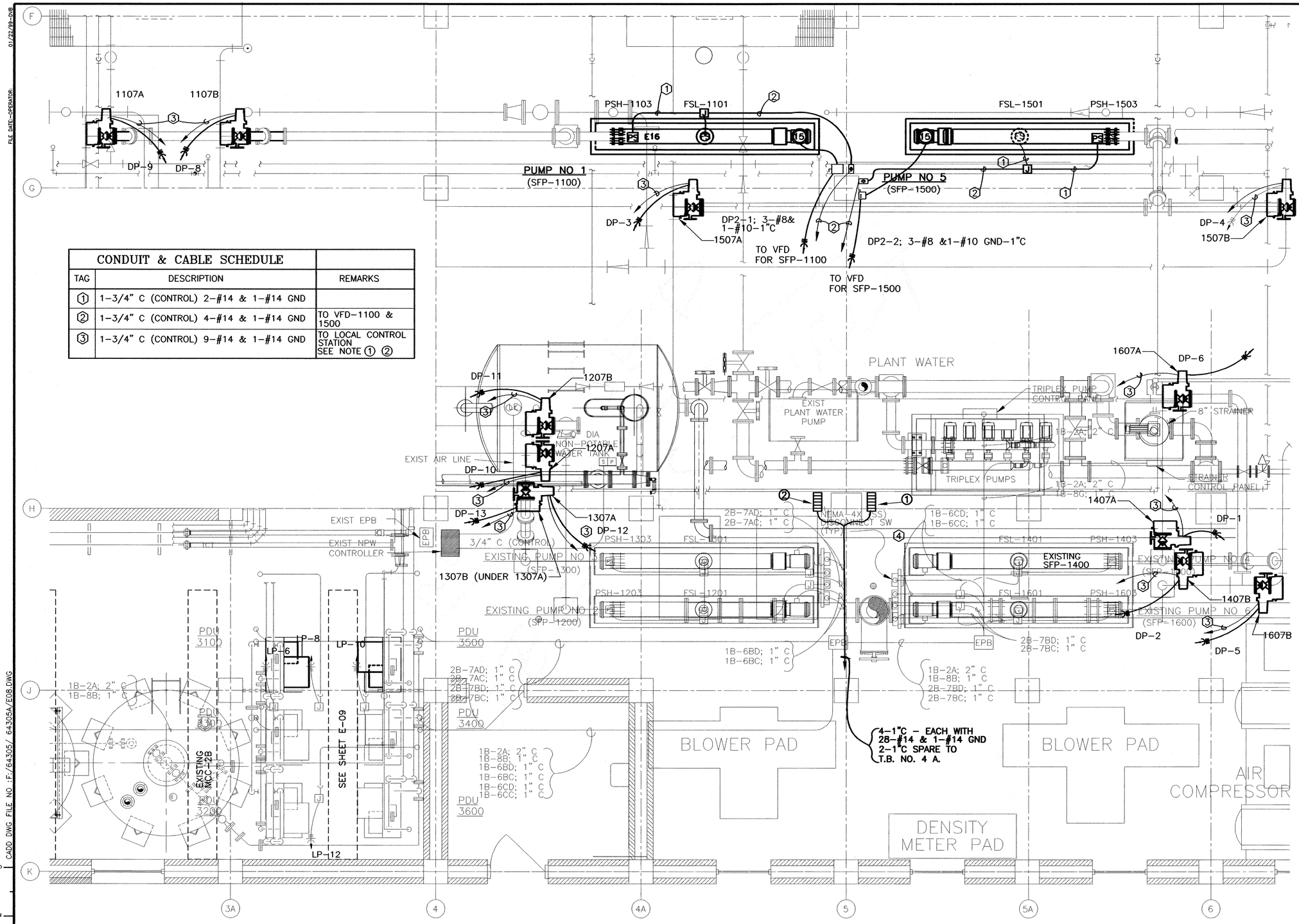

PLAN
SCALE 1"=1'-0"

NOTES:

① LOCAL CONTROL STATIONS, NEMA-4(S.S.) AND T.B. NO. 3 FOR SLUDGE VALVE ACTUATORS NO. 1407 A & B, 1507 A & B AND 1607 A & B.

② LOCAL CONTROL STATIONS, NEMA-4X(S.S) AND T.B. NO. 4 FOR SLUDGE VALVE ACTUATORS NO. 1107 A & B, 1207 A & B AND 1307 A & B.

REV NO	DESCRIPTION	APP'D	DATE

SEAL

STATE OF TEXAS
LARRY M. BARFIELD
39337
REGISTERED PROFESSIONAL ENGINEER
2-23-99

SEAL

CH2M HILL
7600 West Tidwell Road, Suite 400
Houston Tx 77040
713.462.0161

Binkley & Barfield, Inc.
Consulting Engineers
1710 Seamist Drive Houston, Texas 77008

ALMEDA SIMS
BIOSOLIDS
DRYER REHABILITATION

GFS NO: 0298-05-3
FILE NO: 4289-4

ELECTRICAL PLAN
SLUDGE FEED PUMP
AND SLUDGE VALVE ACTUATORS

CITY OF HOUSTON

DEPARTMENT OF PUBLIC WORKS AND ENGINEERING
ENGINEERING, CONSTRUCTION AND REAL ESTATE GROUP

SECTION APPROVALS

WATER ENGINEERING	TRAFFIC AND SIGNAL ENGINEERING
WASTEWATER ENGINEERING 2-25-99	STREET & BRIDGE ENGINEERING
STORMWATER ENGINEERING	CONSTRUCTION 3/2/99
2/25/99	

OTHER DEPARTMENTS

PLANNING AND DEVELOPMENT	SPONSOR DEPARTMENT
CITY ENGINEER	DATE 3-2-99
DIRECTOR OF PUBLIC WORKS AND ENGINEERING	DATE 3/3/99

SUBMITTED:	DESIGNED BY: KKS
SCALE: 1"=1'-0"	DRAWN BY: LTG
DATE:	DWG. NO. : E-08
SURVEY BY:	SHT NO 151 of 159 SHTS
F B NO:	CITY DWG NO: 35001

CADD DWG FILE NO.:F:/64305/ 64305A/E08.DWG

ORIGINAL SCALE IN INCHES FOR REDUCED PLANS
0 1 2 3

ORIGINAL SCALE IN INCHES FOR REDUCED PLANS
0 1 2 3

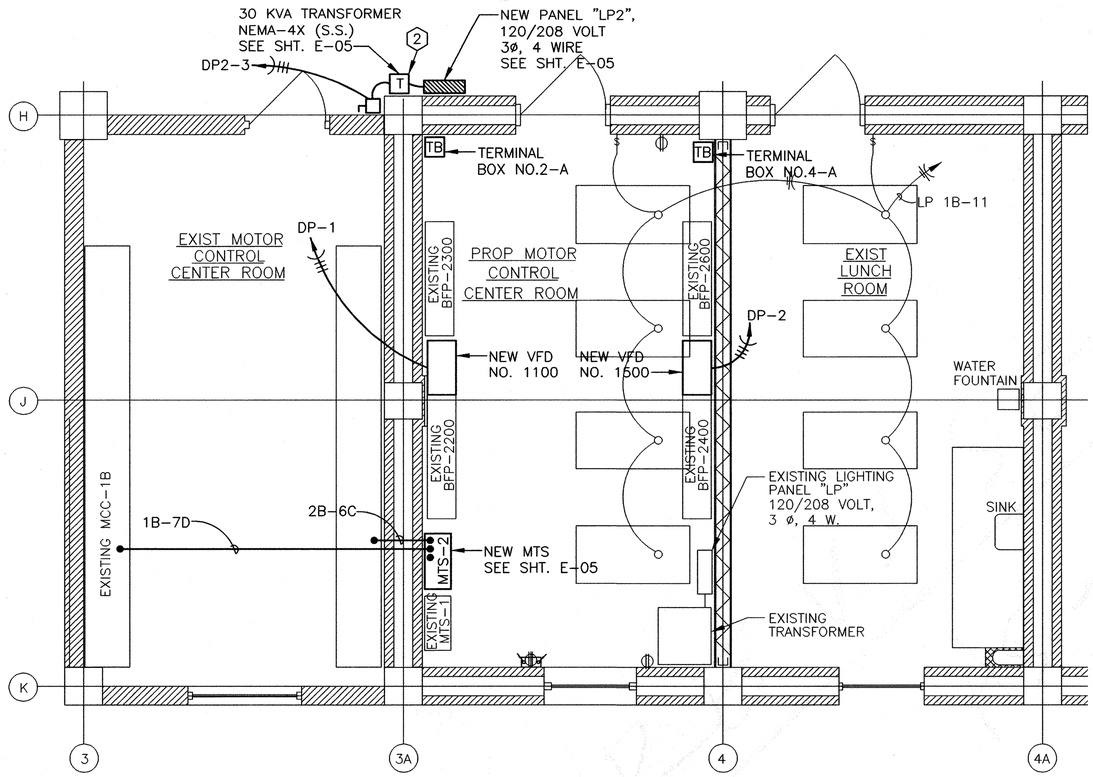

LUNCH AND CONTROL ROOM PLAN (1 / M-02)

NOTES:

1. TERMINATE ALL CONTROL WIRING CONDUITS FROM POLYMER VALVE ACTUATORS, PDU-3100 AND PDU-3500 IN TERMINAL BOX NO. 2A AND ALL CONTROL WIRING CONDUITS FROM SLUDGE VALVE ACTUATORS, PRESSURE AND FLOW CONTROL CONDUITS IN TERMINAL BOX NO. 4-A. FIELD ROUTE ALL CONTROL WIRING CONDUITS TO BFP MAIN CONTROL PANELS.

2. TRANSFORMER MOUNTING HEIGHT 8'-0" MINIMUM. SUPPORT FROM THE WALL WITH GALVANIZED PVC COATED UNISTRUT. EXACT LOCATION TO BE FIELD DETERMINED.

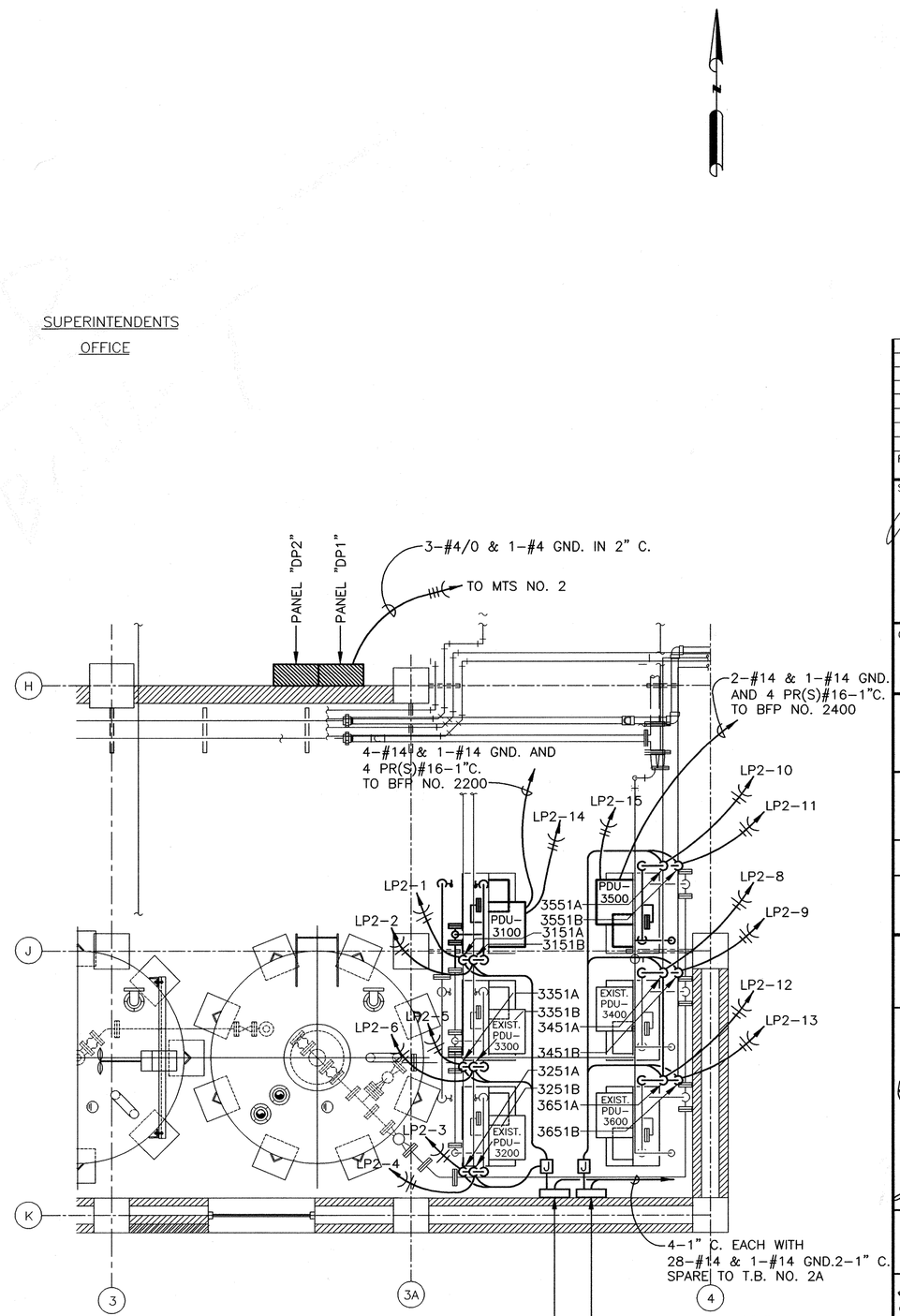

POLYMER PUMP PLAN VIEW (1 / E-09)

REV NO	DESCRIPTION	APP'D	DATE

SEAL

STATE OF TEXAS
LARRY M. BARFIELD
39337
REGISTERED
PROFESSIONAL ENGINEER
2-23-99

SEAL

CH2M HILL
7600 West Tidwell Road, Suite 400
Houston Tx 77040
713.462.0161

Binkley & Barfield, Inc.
Consulting Engineers
1710 Seamist Drive Houston, Texas 77008

ALMEDA SIMS
BIOSOLIDS
DRYER REHABILITATION

GFS NO: 0265-01-2
FILE NO: 4289-4

ELECTRICAL PLAN
CONTROL ROOM
AND POLYMER PUMPS

CITY OF HOUSTON
DEPARTMENT OF PUBLIC WORKS AND ENGINEERING
ENGINEERING, CONSTRUCTION AND REAL ESTATE GROUP

SECTION APPROVALS

WATER ENGINEERING	TRAFFIC AND SIGNAL ENGINEERING
WASTEWATER ENGINEERING 2-25-99	STREET & BRIDGE ENGINEERING
STORMWATER ENGINEERING	CONSTRUCTION 3/2/99
3/5/99	

OTHER DEPARTMENTS

PLANNING AND DEVELOPMENT	SPONSOR DEPARTMENT
CITY ENGINEER 3-2-99 DATE	
DIRECTOR OF PUBLIC WORKS AND ENGINEERING 3/5/99 DATE	

SUBMITTED:	DESIGNED BY: KKS
SCALE: 3/8"=1'-0"	DRAWN BY: LTG
DATE:	DWG. NO. : E-09
SURVEY BY:	SHT NO 152 of 159 SHTS
F B NO:	CITY DWG NO: 35001

FILE DATE--OPERATOR: 01/26/99--DVB

CADD DWG FILE NO.:F:/64305/ 64305A/E09A.DWG

ORIGINAL SCALE IN INCHES FOR REDUCED PLANS

0 1 2 3

NOTES

(1) CONDUITS TURNED UP THROUGH CEILING SLAB TO MCC-3A, MCC-3B AND AUTOMATIC TRANSFER SWITCH.

(2) EXHAUST FAN #1 CONTROLLED BY THERMOSTAT.

(3) INSTALL LIGHTING FIXTURE ON WALL, 10'-0" ABOVE FLOOR. FIXTURE SHALL BE CLEAR OF PIPES, EQUIPMENT AND STRUCTURAL OBSTRUCTIONS

(4) ALL WIRING, EQUIPMENT, DEVICES AND LIGHTING FIXTURES IN LOADING AREA EXCEPT EQUIPMENT ROOM SHALL BE PER ARTICLE 500-5(b) CLASS II DIVISION II.

(5) COMPRESSOR CONTROL PANEL FURNISHED BY EQUIPMENT SUPPLIER. WIRING BETWEEN MULTIPLEXER M-5 (IN CONTROL ROOM) AND BLOWER CONTROL PANEL NO. 1 AND NO 2 SHALL BE DONE PER PROGRAMMABLE CONTROLLER REQUIREMENTS.

(6) STARTERS AND CONTROL DEVICES FOR AIR CONDITIONING EQUIPMENT FURNISHED BY EQUIPMENT SUPPLIER

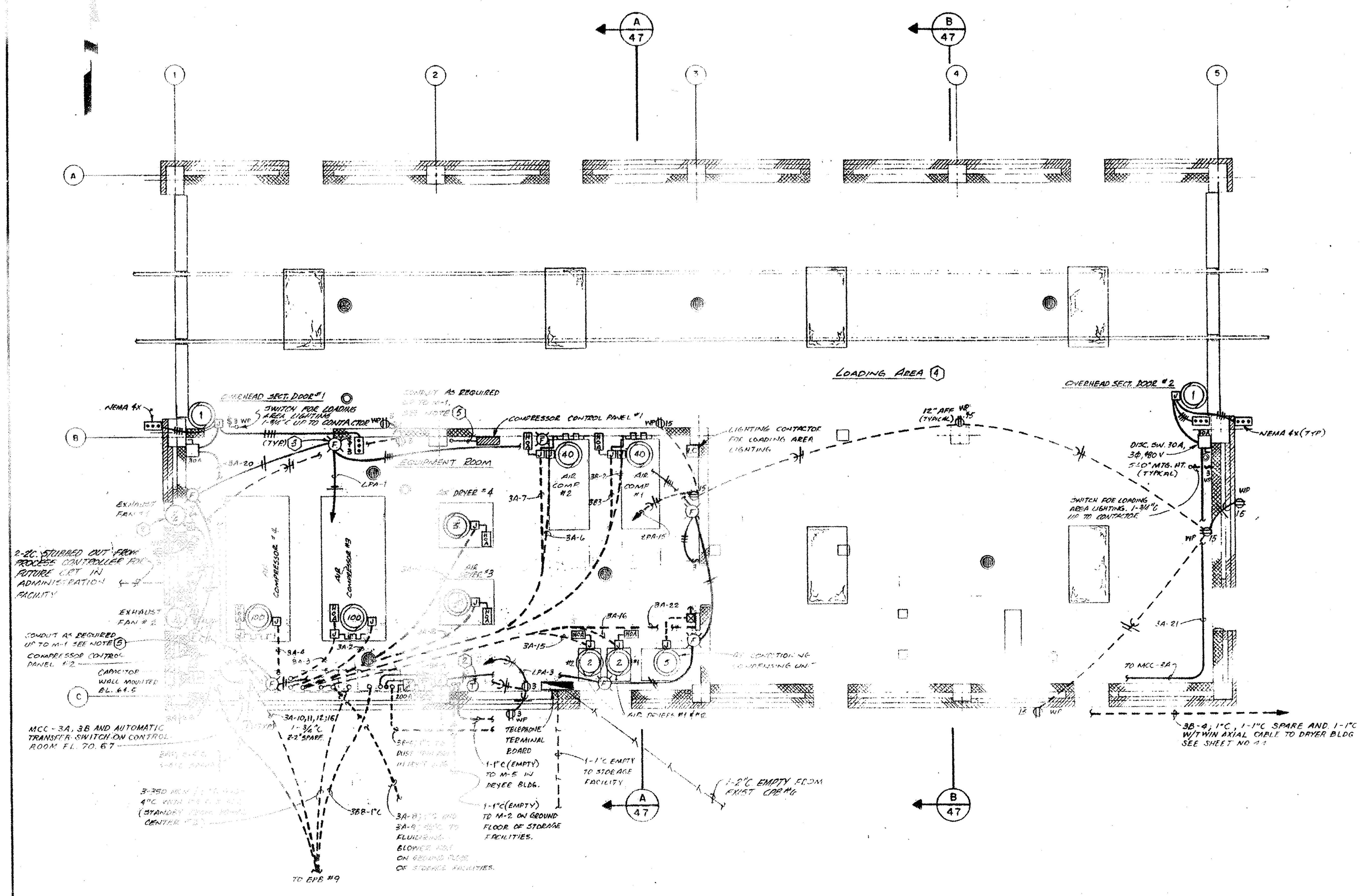

GROUND FLOOR ELECTRICAL PLAN (A/45)

SCALE: 1/4" = 1'-0"

JOB NO. 3304-DS-2

CITY OF HOUSTON DEPARTMENT OF PUBLIC WORKS
ALMEDA SIMS SLUDGE DISPOSAL PLANT — PNEUMATIC CONVEYING, STORAGE AND LOADING FACILITIES
LOADING FACILITIES GROUND FLOOR ELECTRICAL PLAN
RECOMMENDED FOR APPROVAL: BINKLEY & HOLMES, INC. CONSULTING ENGINEERS
APPROVED: WASTEWATER; PAVING; WATER; CONSTRUCTION; STORM SEWER; ASST. DIRECTOR; DIRECTOR
DESIGNED BY K.K.S. — SCALE 1/4" = 1'-0"
DRAWN BY L.L. — DATE APRIL, 1980
CHECKED BY L.M.B. — DRAWING NO.
SHEET — SHEET NO. 45 OF 51

GENERAL NOTES FOR ELECTRICAL DEMOLITION WORK

1. ALL EXISTING BRANCH CIRCUITS SERVING EXISTING CEILING AND WALL MOUNTED FIXTURES SHALL REMAIN.
2. ALL EXISTING BRANCH CIRCUITS SERVING EXISTING RECEPTACLES SHALL REMAIN.
3. ALL EXISTING BRANCH CIRCUITS SERVING EXISTING VENTILATION FANS SHALL REMAIN.
4. FLOOR MOUNTED TRANSFORMER, ASSOCIATED DISCONNECT SWITCH AND PANEL BOARD LOCATED ON SOUTH WALL NEAR COL 2/C SHALL REMAIN.
5. TELEPHONE TERMINAL BOARD, ASSOCIATED CONDUITS AND CONDUCTORS AND CABLES SHALL REMAIN.
6. [illegible] BRANCH CIRCUITS SERVING EXISTING AIR COOLED [illegible] SHALL REMAIN. IF EXISTING A/C UNIT [illegible] ABANDONED, THEN REMOVE EXISTING BRANCH
7. EXISTING CONDUITS AND CONDUCTORS ASSOCIATED WITH EXISTING AIR COMPRESSORS #1, #2, #3 AND #4 AND ASSOCIATED WITH EXISTING DRYERS #1, #2, #3 AND #4 SHALL BE REMOVED. ONLY EQUIPMENT PADS AND PART OF THE COMPRESSORS AND DRYERS ARE EXISTING, AND SHALL BE REMOVED. ALL CONDUCTORS SHALL BE REMOVED UP TO THE POINT OF ELECTRICAL SOURCE, SUCH AS PANEL BOARD, MOTOR CONTROL CENTER, ETC
8. EXISTING COMPRESSOR CONTROL PANELS, ASSOCIATED CONDUITS AND CONDUCTORS SHALL BE REMOVED.
9. ALL UNDERGROUND CONDUITS, ASSOCIATED WITH BRANCH CIRCUITS BEING REMOVED, SHALL BE ABANDONED. ALL CONDUIT STUB UPS ABOVE FLOOR SHALL BE CUT OFF IN THE FLOOR AND SHALL BE CAPPED OFF WITH GALV. STEEL CAPS, FLUSH WITH THE FLOOR ALL ABOVE GROUND CONDUITS SHALL BE REMOVED UP TO THE FIRST CONDUIT JOINT NEAREST TO THE BOTTOM OF THE SECOND FLOOR AND CAPPED OFF WITH GALV. STEEL CAPS.
10. EXISTING FIXTURES TYPE "C", "F", "F1", "H" AND ASSOCIATED LIGHTING CIRCUITS:
    A. ALL FIXTURES IN THE BUILDING, EXCEPT IN THE CONTROL ROOM AND TOILET ROOM, ARE EXPLOSION PROOF FIXTURE THEY SHALL REMAIN.
    B. ALL FIXTURES SHALL BE CLEANED, PROPERLY ATTACHED AND RELAMPED AND PUT IN NORMAL WORKING CONDITION.
    C. CONTRACTOR SHALL PROVIDE A UNIT PRICE TO REPLACE AN EXISTING BALLAST WITH NEW BALLAST AND ASSOCIATED PARTS FOR EACH TYPE OF "HID" FIXTURE IN THE BLDG. THE BALLAST KIT SHALL INCLUDE NEW BALLAST, CAPACITOR AND OTHER REQUIRED PARTS AND HARDWARE.
11. EXISTING BRANCH CIRCUITS, DISCONNECT SWITCHES AND START/STOP WALL MOUNTED STATIONS SERVING ALL OVERHEAD DOORS SHALL REMAIN. IF THEY ARE NOT-WORKING, THEY SHALL BE PUT IN NORMAL WORKING CONDITIONS. CONTRACTORS SHALL INCLUDE ALL ANTICIPATED COSTS IN THEIR BIDS.
12. FOR EXISTING BRANCH CIRCUITS AND EQUIPMENT FEEDERS BEING REMOVED, OVER CURRENT PROTECTION DEVICES AT MCC AND PANEL BOARDS SHALL BE SET IN "OFF" POSITIONS BEFORE THE BRANCH CIRCUITS AND FEEDERS ARE REMOVED.
13. DURING THE BIDDING PHASE OF THE PROJECT, THE CONTRACTOR SHALL MAKE SITE VISITS AND EVALUATE ALL FIXTURES, SWITCHES, OVERHEAD DOOR OPENERS, BRANCH CIRCUITS, ETC. AND INCLUDE ALL COSTS IN BID TO PUT THEM IN WORKING CONDITIONS.
14. DURING DEMOLITION PHASE, ALL REMAINING EQUIPMENT FIXTURES, CIRCUITS, ETC. SHALL BE PROTECTED FROM DAMAGES.

PRIVATE UTILITY LINES SHOWN

ENTEX, INC.

SOUTHWESTERN BELL TELEPHONE COMPANY
Valid for one year only.

HOUSTON LIGHTING & POWER CO.
Approval only for crossing underground ductlines unless noted. Valid for one year only.

REV NO	DESCRIPTION	APP'D	DATE

SEAL: AS-BUILT

SEAL: STATE OF TEXAS — M. C. DABHI — REGISTERED PROFESSIONAL ENGINEER — 1/25/99

DABHI ENGINEERING ASSOC, INC.
21210 PARK YORK DR. 713/492-6885
KATY, TEXAS 77450

RATNALA & BAHL, INC.
Engineers • Architects • Surveyors
11767 KATY FREEWAY SUITE 510
HOUSTON, TEXAS 77079

CH2M HILL
7600 West Tidwell Road, Suite 400
Houston Tx 77040
713.462.0161

Binkley & Barfield, Inc.
Consulting Engineers
Seamist Drive Houston, Texas 77008

ALMEDA SIMS
BIOSOLIDS
DRYER REHABILITATION

CIP NO 0298-05-3
FILE NO: 4289-4

STORAGE FACILITIES GROUND FLOOR ELECTRICAL DEMOLITION PLAN

CITY OF HOUSTON
DEPARTMENT OF PUBLIC WORKS AND ENGINEERING
ENGINEERING, CONSTRUCTION AND REAL ESTATE GROUP

SECTION APPROVALS

WATER ENGINEERING	TRAFFIC AND SIGNAL ENGINEERING
2-25-99 WASTEWATER ENGINEERING	STREET & BRIDGE ENGINEERING
STORMWATER ENGINEERING	3/2/99 CONSTRUCTION
2/25/99	

OTHER DEPARTMENTS

PLANNING AND DEVELOPMENT	SPONSOR DEPARTMENT
CITY ENGINEER	3-2-99 DATE
DIRECTOR OF PUBLIC WORKS AND ENGINEERING	3/5/99 DATE

SUBMITTED:	DESIGNED BY: DJR
SCALE: AS NOTED NONE	DRAWN BY:
DATE: 1/22/99	DWG. NO.
SURVEY BY: N/A	SHT NO 153 OF SHTS
F B NO:	CITY DWG NO: 35001

CADD DWG FILE NO : F:/6...

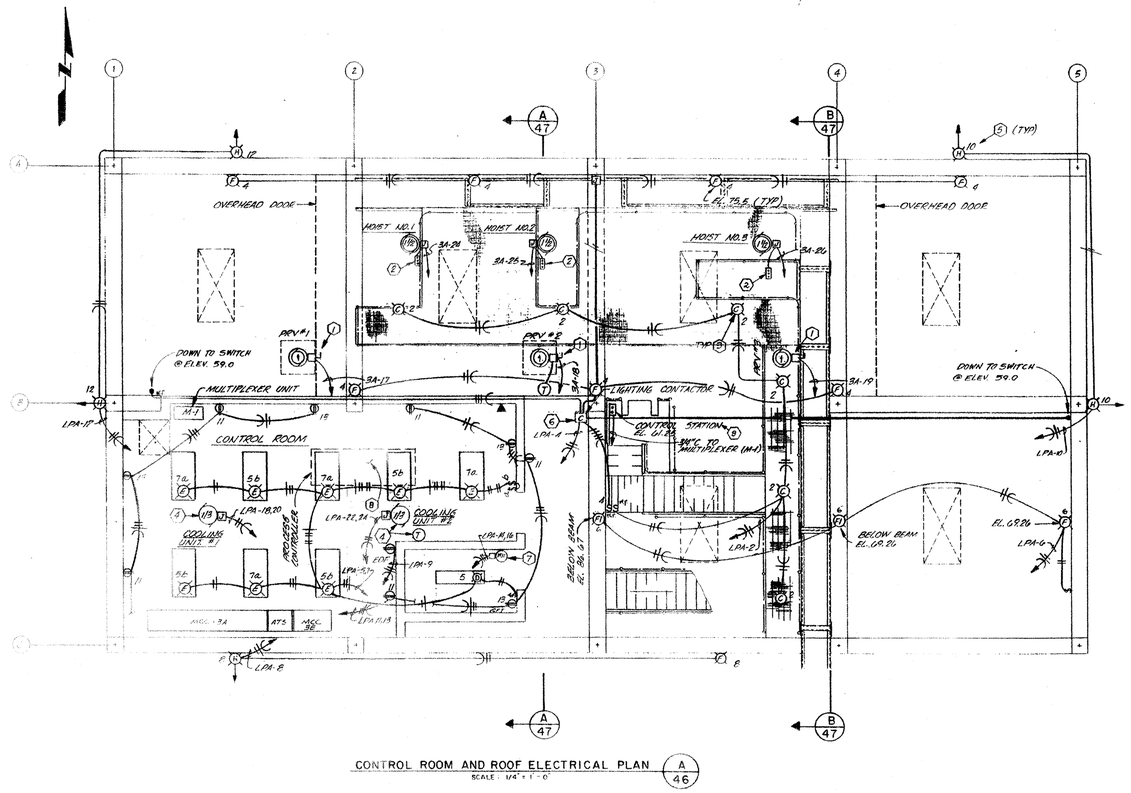

CONTROL ROOM AND ROOF ELECTRICAL PLAN (A 46)
SCALE : 1/4" = 1'-0"

NOTES

1. VARIOUS NEMA 4X DISCONNECT SWITCH, 30A, 480 VOLT, 3PH, 480 VOLT, 30A, 480V, FUSIBLE TYPE ON ROOF TOP EQUIPMENT SHALL BE CONTROLLED BY THERMOSTAT.
2. PUSH BUTTON STATION @ EL. 71.00. PUSH BUTTON AND CABLE SHALL BE FURNISHED BY EQUIPMENT SUPPLIER
3. LIGHTING FIXTURE TYPE "C" SHALL BE MOUNTED ON CEILING.
4. CONTROL WIRING FOR CONDENSING UNIT #1 (EQUIPMENT ROOM) AND COOLING UNIT #1&2 SHALL BE PER EQUIPMENT MANUFACTURER.
5. FLOOD LIGHTS SHALL BE INSTALLED AT ELEVATION 88.67 AND SHALL BE CONTROLLED BY PHOTOCELL.
6. LIGHTING CONTACTOR LOCATED ON EQUIPMENT ROOM WALL (GROUND FLOOR)
7. WATER HEATER LOCATED ON TOP OF REST ROOM CEILING SLAB.
8. PROCESS CONTROLLER WITH CRT AND PRINTER. FINAL LOCATION AND ORIENTATION WILL BE DECIDED IN THE FIELD. WIRING BETWEEN PROGRAMMABLE PROCESS CONTROLLER AND OTHER EQUIPMENTS SUCH AS MULTIPLEXER, REMOTE I/O DRIVERS, REMOTE MULTIPLEXERS (I/O UNITS) SHALL BE DONE PER PROCESS CONTROL EQUIPMENT SUPPLIERS INSTRUCTIONS. SEE SHEETS #1, #2 AND #3.
9. CONTROL STATION FOR LOADING OPERATION AND NECESSARY WIRING SHALL BE DONE AS PER THE REQUIREMENTS OF THE PROGRAMMABLE CONTROLLER AND COORDINATED WITH THE SUPPLIER THEREOF.

GENERAL NOTES

1. ALL WIRING, EQUIPMENT, DEVICES AND LIGHTING FIXTURES IN LOADING AREA, EXCEPT CONTROL ROOM AND EQUIPMENT ROOM SHALL BE PER NATIONAL ELECTRICAL CODE ARTICLE 502 (CLASS II, DIVISION II)
2. LIGHTING PROTECTION SYSTEM SHALL BE EXTENDED FROM THE STORAGE FACILITIES TO THE ADJACENT LOADING FACILITIES AS PER "NFPA" AND UNDERWRITERS' LABORATORIES.

JOB NO. 3304-DS-2

CITY OF HOUSTON
DEPARTMENT OF PUBLIC WORKS

ALMEDA SIMS
SLUDGE DISPOSAL PLANT
PNEUMATIC CONVEYING, STORAGE AND LOADING FACILITIES

LOADING FACILITIES
CONTROL ROOM AND ROOF
ELECTRICAL PLAN

RECOMMENDED FOR APPROVAL
BINKLEY & HOLMES, INC. CONSULTING ENGINEERS

APPROVED:
WASTEWATER
PAVING
WATER
CONSTRUCTION
STORM SEWER
ASST. DIRECTOR
DIRECTOR

DESIGNED BY K.K.S. SCALE 1/4"=1'-0"
DRAWN BY M.V.S. DATE APRIL, 1980
CHECKED BY L.M.B. DRAWING NO.
SHEET SHEET NO. 46 OF 51

PRIVATE UTILITY LINES SHOWN

ENTEX, INC.

SOUTHWESTERN BELL TELEPHONE CO.
Valid for one year only

HOUSTON LIGHTING & POWER CO.
Approval only for crossing underground ductlines unless noted. Valid for one year only.

REV NO	DESCRIPTION	APP'D	DATE

SEAL

AS-BUILT

SEAL
STATE OF TEXAS
M. G. DABHI
42122
REGISTERED PROFESSIONAL ENGINEER
1/25/99

DABHI ENGINEERING ASSOC, INC.
21210 PARK YORK DR. 713/492-6885
KATY, TEXAS 77450

RATNALA & BAHL, INC.
Engineers • Architects • Surveyors
11767 KATY FREEWAY SUITE 510
HOUSTON, TEXAS 77079

CH2M HILL
7600 West Tidwell Road, Suite 400
Houston Tx 77040
713 462.0161

Binkley & Barfield, Inc.
Consulting Engineers
1710 Seamist Drive Houston, Texas 77008

ALMEDA SIMS
BIOSOLIDS
DRYER REHABILITATION

CIP NO 0298-05-3
FILE NO: 4289-4

STORAGE FACILITIES ROOF ELECTRICAL DEMOLITION PLAN

CITY OF HOUSTON
DEPARTMENT OF PUBLIC WORKS AND ENGINEERING
ENGINEERING, CONSTRUCTION AND REAL ESTATE GROUP

SECTION APPROVALS

WATER ENGINEERING
TRAFFIC AND SIGNAL ENGINEERING
WASTEWATER ENGINEERING 2-25-99
STREET & BRIDGE ENGINEERING
STORMWATER ENGINEERING
CONSTRUCTION 3/2/99

OTHER DEPARTMENTS

PLANNING AND DEVELOPMENT
SPONSOR DEPARTMENT
CITY ENGINEER 3-2-99
DATE
DIRECTOR OF PUBLIC WORKS AND ENGINEERING 3/5/99
DATE

GENERAL NOTES FOR ELECTRICAL DEMOLITION WORK

1. ALL EXISTING BRANCH CIRCUITS SERVING EXISTING CEILING AND WALL MOUNTED FIXTURES SHALL REMAIN.
2. ALL EXISTING BRANCH CIRCUITS SERVING EXISTING RECEPTACLES SHALL REMAIN.
3. ALL EXISTING BRANCH CIRCUITS SERVING EXISTING VENTILATION FANS SHALL REMAIN.
4. FLOOR MOUNTED TRANSFORMER, ASSOCIATED DISCONNECT SWITCH AND PANEL BOARD LOCATED ON SOUTH WALL NEAR COIL 2/C SHALL REMAIN.
5. TELEPHONE TERMINAL BOARD, ASSOCIATED CONDUITS AND CONDUCTORS AND CABLES SHALL REMAIN.
6. EXISTING BRANCH CIRCUITS SERVING EXISTING AIR COOLED CONDENSING UNIT SHALL REMAIN. IF EXISTING A/C UNIT HAS BEEN REMOVED, THEN REMOVE EXISTING BRANCH CIRCUIT.
7. EXISTING CONDUITS AND CONDUCTORS ASSOCIATED WITH EXISTING AIR COMPRESSORS #1, #2, #3 AND #4 AND ASSOCIATED WITH EXISTING DRYERS #1, #2, #3 AND #4 SHALL BE REMOVED. ONLY EQUIPMENT PADS AND PART OF THE COMPRESSORS AND DRYERS ARE EXISTING, AND SHALL BE REMOVED. ALL CONDUCTORS SHALL BE REMOVED UP TO THE POINT OF ELECTRICAL SOURCE, SUCH AS PANEL BOARD, MOTOR CONTROL CENTER, ETC.
8. EXISTING COMPRESSOR CONTROL PANELS, ASSOCIATED CONDUITS AND CONDUCTORS SHALL BE REMOVED.
9. ALL UNDER GROUND CONDUITS, ASSOCIATED WITH BRANCH CIRCUITS BEING REMOVED, SHALL BE ABANDONED. ALL CONDUIT STUB UPS ABOVE FLOOR SHALL BE CUT OFF IN THE FLOOR AND SHALL BE CAPPED OFF FLUSH WITH THE FLOOR. ALL ABOVE GROUND CONDUITS WITH GALV STEEL CAPS SHALL BE REMOVED UP TO THE FIRST CONDUIT JOINT NEAREST TO THE BOTTOM OF THE SECOND FLOOR AND CAPPED OFF WITH GALV STEEL CAPS.
10. EXISTING FIXTURES TYPE "C", "F", "F1", "H" AND ASSOCIATED LIGHTING CIRCUITS:
    A. ALL FIXTURES IN THE BUILDING, EXCEPT IN THE CONTROL ROOM AND TOILET ROOM, ARE EXPLOSION PROOF FIXTURES THEY SHALL REMAIN.
    B. ALL FIXTURES SHALL BE CLEANED, PROPERLY ATTACHED AND RELAMPED AND PUT IN NORMAL WORKING CONDITION.
    C. CONTRACTOR SHALL PROVIDE A UNIT PRICE TO REPLACE THE EXISTING BALLAST WITH NEW BALLAST KIT (BALLAST, CAPACITOR, ETC.) FOR EACH TYPE OF HID FIXTURE.
11. EXISTING BRANCH CIRCUITS, DISCONNECT SWITCHES AND START/STOP WALL MOUNTED STATIONS SERVING ALL OVERHEAD DOORS SHALL REMAIN. IF THEY ARE NON-WORKING, THEY SHALL BE PUT IN NORMAL WORKING CONDITION. CONTRACTORS SHALL INCLUDE ALL ANTICIPATED COSTS IN THEIR BIDS.
12. FOR EXISTING BRANCH CIRCUITS AND EQUIPMENT FEEDERS BEING REMOVED, OVER CURRENT PROTECTION DEVICES AT MCC AND PANEL BOARDS SHALL BE SET IN "OFF" POSITIONS BEFORE THE FEEDERS ARE REMOVED.
13. DURING THE BIDDING PHASE OF THE PROJECT, THE CONTRACTOR SHALL MAKE SITE VISITS AND EVALUATE ALL FIXTURES, SWITCHES, OVERHEAD DOOR OPENERS, BRANCH CIRCUITS, ETC. AND INCLUDE ALL COSTS IN BID TO PUT THEM IN WORKING CONDITIONS.
14. DURING DEMOLITION PHASE, ALL REMAINING EQUIPMENT FIXTURES, CIRCUITS, ETC. SHALL BE PROTECTED FROM DAMAGES.

SUBMITTED
SCALE AS NOTED
NONE
DATE: 1/22/99
SURVEY BY N/A
F B NO:

DESIGNED BY DJR
DRAWN BY MW
DWG. NO. 22
SHT NO 154 OF SHTS
CITY DWG NO:
35001

ORIGINAL SCALE IN INCHES

PRIVATE UTILITY LINES SHOWN

SOUTHWESTERN BELL TELEPHONE COMPANY
Valid for one year only

HOUSTON LIGHTING & POWER CO.
Approval only for crossing underground ductlines unless noted. Valid for one year only.

NOTES

1. ALL WIRING, EQUIPMENT, DEVICES AND LIGHTING FIXTURES ETC. IN STORAGE FACILITIES SHALL BE PER ARTICLE 500-5(6) CLASS II DIVISION II.
2. WIRING BETWEEN MULTIPLEXER M-3 (REMOTE I/O UNIT) AND INSTRUMENTS/DEVICES FOR PRESSURE POT NO.3 AND NO.4 SHALL BE DONE PER PNEUMATIC CONVEYING SYSTEM AND PROCESS CONTROL SYSTEM REQUIREMENTS. CO-AXIAL CABLE SHALL BE INSTALLED IN CONDUIT BETWEEN MULTIPLEXER M-3 AND PROCESS CONTROLLER IN LOADING BUILDING. CABLE FURNISHED BY PROCESS CONTROL SYSTEM SUPPLIER.

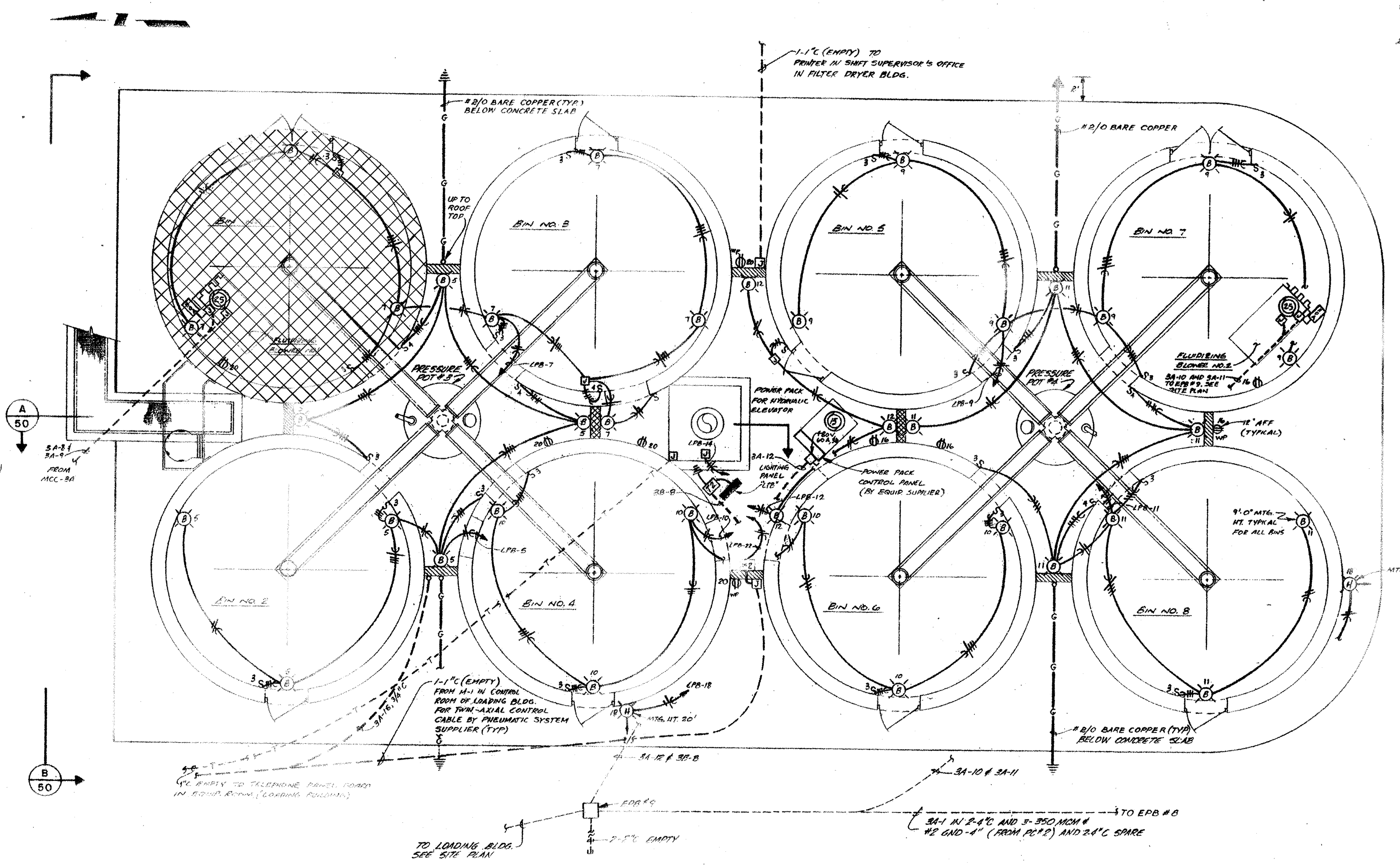

GROUND FLOOR ELECTRICAL PLAN (A / 48)
SCALE: 1/4" = 1'-0"

LIGHTNING PROTECTION SYSTEM

GENERAL NOTES:

1. LIGHTNING PROTECTION GROUNDING AND BONDING BETWEEN ELECTRICAL GROUND ROD SHALL BE PER UNDER WRITERS LABORATORIES "MASTER LABELED LIGHTNING PROTECTION SYSTEM".
2. SEE LIGHTNING PROTECTION, GENERAL NOTES ON SHEET NO. 49 OF 51.
3. LIGHTNING PROTECTION SYSTEM SHALL BE EXTENDED TO THE ADJACENT LOADING FACILITIES AS PER "NFPA" AND UNDER WRITERS LABORATORIES.

JOB NO 3304-D5-2

CITY OF HOUSTON
DEPARTMENT OF PUBLIC WORKS
ALMEDA SIMS SLUDGE DISPOSAL PLANT
PNEUMATIC CONVEYING, STORAGE AND LOADING FACILITIES

STORAGE FACILITIES GROUND FLOOR ELECTRICAL PLAN

RECOMMENDED FOR APPROVAL:
BINKLEY & HOLMES, INC. CONSULTING ENGINEERS

APPROVED:
WASTEWATER — PAVING — WATER — CONSTRUCTION — STORM SEWER — ASST. DIRECTOR — DIRECTOR

DESIGNED BY K.K.S. — SCALE 1/4" = 1'-0"
DRAWN BY L. L. — DATE APRIL, 1980
CHECKED BY L.M.B. — DRAWING NO.
SHEET NO. 48 OF 51

GENERAL NOTES FOR ELECTRICAL DEMOLITION WORK

1. ALL EXISTING BRANCH CIRCUITS SERVING EXISTING CEILING AND WALL MOUNTED FIXTURES SHALL REMAIN.
2. ALL EXISTING BRANCH CIRCUITS SERVING EXISTING RECEPTACLES SHALL REMAIN.
3. ALL EXISTING BRANCH CIRCUITS SERVING EXISTING VENTILATION FANS SHALL REMAIN.
4. ALL UNDER GROUND CONDUITS, ASSOCIATED WITH BRANCH CIRCUITS BEING REMOVED, SHALL BE ABANDONED. ALL CONDUIT STUB UPS ABOVE FLOOR SHALL BE CUT OFF IN THE FLOOR AND SHALL BE CAPPED OFF WITH GALV STEEL CAPS FLUSH WITH THE FLOOR. ALL ABOVE GROUND CONDUITS SHALL BE REMOVED UP TO THE FIRST CONDUIT JOINT NEAREST TO THE BOTTOM OF THE SECOND FLOOR AND CAPPED OFF WITH GALV STEEL CAPS.
5. EXISTING FIXTURES TYPE "A" & "B" AND ASSOCIATED LIGHTING CIRCUITS:
   A. ALL FIXTURES ARE EXPLOSION PROOF, THEY SHALL REMAIN
   B. ALL FIXTURES SHALL BE CLEANED, PROPERLY ATTACHED AND RELAMPED AND PUT IN NORMAL WORKING CONDITION.
6. EXISTING BRANCH CIRCUITS, DISCONNECT SWITCHES AND START/STOP WALL MOUNTED STATIONS SHALL REMAIN. IF THEY ARE NON-WORKING, THEY SHALL BE PUT IN NORMAL WORKING CONDITIONS. CONTRACTOR SHALL INCLUDE ALL ANTICIPATED COSTS IN THEIR BIDS.
7. FOR EXISTING BRANCH CIRCUITS AND EQUIPMENT FEEDERS BEING REMOVED, OVER CURRENT PROTECTION DEVICES AT MCC AND PANEL BOARDS SHALL BE SET IN "OFF" POSITIONS BEFORE THE FEEDERS ARE REMOVED.
8. DURING THE BIDDING PHASE OF THE PROJECT, THE CONTRACTOR SHALL MAKE SITE VISITS AND EVALUATE ALL FIXTURES, SWITCHES, OVERHEAD DOOR OPENERS, BRANCH CIRCUITS, ETC. AND INCLUDE ALL COSTS IN BID TO PUT THEM IN WORKING CONDITIONS.
9. DURING DEMOLITION PHASE, ALL REMAINING EQUIPMENT FIXTURES, CIRCUITS, ETC. SHALL BE PROTECTED FROM DAMAGES.
10. ALL ELECTRICAL DEMOLITION WORK IS ASSOCIATED WITH THE THE EXISTING SILO SHOWN BY CROSS-HATCH ON THIS DWG.

REV NO	DESCRIPTION	APP'D	DATE

SEAL: AS-BUILT
SEAL: STATE OF TEXAS — M. C. DABHI — 42122 — REGISTERED PROFESSIONAL ENGINEER — 1/25/99

DABHI ENGINEERING ASSOC, INC.
21210 PARK YORK DR. KATY, TEXAS 77450 — 713/492-6885

RATNALA & BAHL, INC.
Engineers • Architects • Surveyors
11767 KATY FREEWAY SUITE 510
HOUSTON, TEXAS 77079

CH2M HILL
7600 West Tidwell Road, Suite 400
Houston Tx 77040
713.462.0161

Binkley & Barfield, Inc.
Consulting Engineers
1710 Seamist Drive Houston, Texas 77008

ALMEDA SIMS BIOSOLIDS DRYER REHABILITATION

CIP NO 0298-05-3
FILE NO. 4289-4

LOADING FACILITIES GROUND FLOOR ELECTRICAL DEMOLITION PLAN

CITY OF HOUSTON
DEPARTMENT OF PUBLIC WORKS AND ENGINEERING
ENGINEERING, CONSTRUCTION AND REAL ESTATE GROUP

SECTION APPROVALS

WATER ENGINEERING — TRAFFIC AND SIGNAL ENGINEERING
WASTEWATER ENGINEERING 2-25-99 — STREET & BRIDGE ENGINEERING
STORMWATER ENGINEERING — CONSTRUCTION 3/2/99
2/25/99

OTHER DEPARTMENTS

PLANNING AND DEVELOPMENT — SPONSOR DEPARTMENT
CITY ENGINEER — DATE 3-2-99
DIRECTOR OF PUBLIC WORKS AND ENGINEERING — DATE 3/5/99

SUBMITTED:
SCALE: AS NOTED NONE
DATE: 1/22/99
SURVEY BY: N/A
F B NO:
DESIGNED BY: DJR
DRAWN BY: WLW
DWG. NO.: E-23
SHT NO 155 of SHTS
CITY DWG NO: 35001

COND DWG FILE NO F-[illegible] FILE NO [illegible]

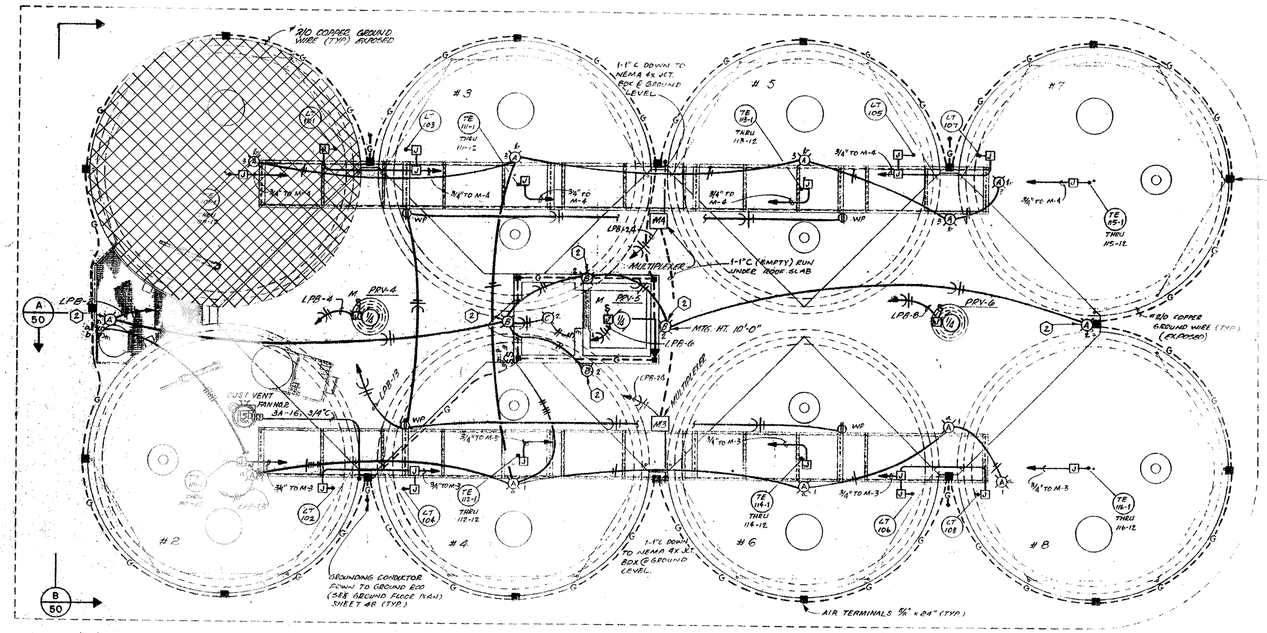

NOTES

ALL WIRING, EQUIPMENT, DEVICES AND LIGHTING FIXTURES SHALL BE PER ARTICLE 500-5(b) CLASS II DIVISION II.

(1) LIGHTING FIXTURE TYPE 'A' SHALL BE SUPPORTED TO STRUCTURAL MOUNTING HEIGHT 9'-6".

(2) LIGHTING ON CIRCUIT LPB-2 SHALL BE CONTROLLED BY PHOTOCELL.

(3) WIRING BETWEEN MULTIPLEXERS M1, M-2 AND SOLENOID VALVES, THERMO COUPLES AND LEVEL TRANSMITTERS SHALL BE #16AWG TEF PNEUMATIC CONVEYING SYSTEM AND PROCESS CONTROL SYSTEM REQUIREMENTS. CO-AXIAL CABLE SHALL BE INSTALLED IN CONDUIT FROM MULTIPLEXERS M1 & M2 TO PROCESS CONTROLLER IN LOADING BLDG. CABLE FURNISHED BY PROCESS CONTROL SYSTEM SUPPLIER.

LIGHTNING PROTECTION

GENENAL NOTES

(1) THE LIGHTNING PROTECTION SHALL BE PER N.F.P.A., U.S. BUREAU OF STANDARDS, UNDERWRITERS LABORATORIES AND N.E.C.

(2) ALL MATERIALS SHALL BE APPROVED BY U.L. AND UPON COMPLETION, THE LIGHTNING PROTECTION SYSTEM SHALL BE INSPECTED BY U.L. AND THEIR MASTER LABEL ISSUED AND PRESENTED TO THE OWNER.

(3) ALL MECHANICAL EQUIPMENT, HANDRAILS AND METAL PARTS SHALL BE BONDED TO THE LIGHTNING PROTECTION SYSTEM.

ROOF ELECTRICAL PLAN — SCALE: 1/4" = 1'-0" — A 49

GENERAL NOTES FOR ELECTRICAL DEMOLITION WORK

1. ALL EXISTING BRANCH CIRCUITS SERVING EXISTING CEILING AND WALL MOUNTED FIXTURES SHALL REMAIN.
2. ALL EXISTING BRANCH CIRCUITS SERVING EXISTING RECEPTACLES SHALL REMAIN.
3. ALL EXISTING BRANCH CIRCUITS SERVING EXISTING VENTILATION FANS SHALL REMAIN.
4. ALL UNDER GROUND CONDUITS, ASSOCIATED WITH BRANCH CIRCUITS BEING REMOVED, SHALL BE ABANDONED. ALL CONDUIT STUB UPS ABOVE FLOOR SHALL BE CUT OFF IN THE FLOOR AND SHALL BE CAPPED OFF WITH GALV STEEL CAPS FLUSH WITH THE FLOOR. ALL ABOVE GROUND CONDUITS SHALL BE REMOVED UP TO THE FIRST CONDUIT JOINT NEAREST TO THE BOTTOM OF THE SECOND FLOOR AND CAPPED OFF WITH GALV STEEL CAPS.
5. EXISTING FIXTURES TYPE "A" & "B" AND ASSOCIATED LIGHTING CIRCUITS:
   A. ALL FIXTURES ARE EXPLOSION PROOF, THEY SHALL REMAIN
   B. ALL FIXTURES SHALL BE CLEANED, PROPERLY ATTACHED AND RELAMPED AND PUT IN NORMAL WORKING CONDITION.
6. EXISTING BRANCH CIRCUITS, DISCONNECT SWITCHES AND START/STOP WALL MOUNTED STATIONS SHALL REMAIN. IF THEY ARE NON-WORKING, THEY SHALL BE PUT IN NORMAL WORKING CONDITIONS. CONTRACTORS SHALL INCLUDE ALL ANTICIPATED COSTS IN THEIR BIDS.
7. FOR EXISTING BRANCH CIRCUITS AND EQUIPMENT FEEDERS BEING REMOVED, OVER CURRENT PROTECTION DEVICES AT MCC AND PANEL BOARDS SHALL BE SET IN "OFF" POSITIONS BEFORE THE FEEDERS ARE REMOVED.
8. DURING THE BIDDING PHASE OF THE PROJECT, THE CONTRACTOR SHALL MAKE SITE VISITS AND EVALUATE ALL FIXTURES, SWITCHES, OVERHEAD DOOR OPENERS, BRANCH CIRCUITS, ETC. AND INCLUDE ALL COSTS IN BID TO PUT THEM IN WORKING CONDITIONS.
9. DURING DEMOLITION PHASE, ALL REMAINING EQUIPMENT FIXTURES, CIRCUITS, ETC. SHALL BE PROTECTED FROM DAMAGES.
10. ALL ELECTRICAL DEMOLITION WORK IS ASSOCIATED WITH THE EXISTING SILO SHOWN BY CROSS-HATCH ON THIS DWG.

DABHI ENGINEERING ASSOC. INC.
21210 PARK YORK DR. 713/492-6885
KATY, TEXAS 77450

JOB NO. 3364 DS-2

CITY OF HOUSTON
DEPARTMENT OF PUBLIC WORKS

ALMEDA SIMS
SLUDGE DISPOSAL PLANT
PNEUMATIC CONVEYING, STORAGE AND LOADING FACILITIES

STORAGE FACILITIES
ROOF ELECTRICAL PLAN

RECOMMENDED FOR APPROVAL:
Kenneth R. Bradley
BINKLEY & HOLMES, INC. CONSULTING ENGINEERS

APPROVED:
WASTEWATER
WATER
STORM SEWER ASST. DIRECTOR
PAVING CONSTRUCTION
DIRECTOR

DESIGNED BY: K.K.S. SCALE: 1/4" = 1'-0"
DRAWN BY: M.V.S. DATE: APRIL, 1980
CHECKED BY: L.M.B. DRAWING NO.
SHEET SHEET NO. 49 OF 51

PRIVATE UTILITY LINES SHOWN

ENTEX

SOUTHWESTERN BELL TELEPHONE COMPANY
Valid for one year only.

HOUSTON LIGHTING & POWER CO.
Approval only for crossing underground ductlines unless noted. Valid for one year only.

REV NO	DESCRIPTION	APP'D	DATE

SEAL
AS-BUILT

SEAL
STATE OF TEXAS
M. C. DABHI
42122
REGISTERED PROFESSIONAL ENGINEER
1/25/99

DABHI ENGINEERING ASSOC, INC.
21210 PARK YORK DR. 713/492-6885
KATY, TEXAS 77450

RATNALA & BAHL, INC.
Engineers • Architects • Surveyors
11767 KATY FREEWAY, SUITE 510
HOUSTON, TEXAS 77079

CH2M HILL
7600 West Tidwell Road, Suite 400
Houston Tx 77040
713.462.0161

Binkley & Barfield, Inc.
Consulting Engineers
1710 Seamist Drive Houston, Texas. 77008

ALMEDA SIMS
BIOSOLIDS
DRYER REHABILITATION

CIP NO 0298-05-3
FILE NO: 4289-4

LOADING FACILITIES CONTROL ROOM & ROOF ELECTRICAL DEMOLITION PLAN

CITY OF HOUSTON
DEPARTMENT OF PUBLIC WORKS AND ENGINEERING
ENGINEERING, CONSTRUCTION AND REAL ESTATE GROUP

SECTION APPROVALS

WATER ENGINEERING
TRAFFIC AND SIGNAL ENGINEERING
WASTEWATER ENGINEERING 2-25-99
STREET & BRIDGE ENGINEERING
STORMWATER ENGINEERING
CONSTRUCTION 2/24/99
2/24/99

OTHER DEPARTMENTS

PLANNING AND DEVELOPMENT
SPONSOR DEPARTMENT
CITY ENG. 3-2-99
DIRECTOR, PUBLIC WORKS AND ENGINEERING 3/5/99

SUBMITTED:
SCALE: AS NOTED
NONE
DATE: 1/22/99
SURVEY BY: N/A
F B NO:

DESIGNED BY: DJR
DRAWN BY: MJW
DWG. NO. E-24
SHT NO 156 OF SHTS
CITY DWG NO: 35001

CADD DWG FILE NO. :F:/64305/9847-E-26
FILE DATE-SUPERIOR 02/22/99 PCB

GENERAL NOTES:

1. CONDUITS ROUTINGS SHOWN HERE ARE APPROX. EXACT LOCATIONS SHALL BE FIELD COORDINATED WITH EXISTING CONDUITS, VENTILATION FANS, LIGHT FIXTURES, BLDG., ROOF STRUC, DUCT WORK, PIPING BLDG. CRANES AND OTHER UTILITIES.
2. ALL CONDUITS SHALL BE INSTALLED ABOVE (E) BLDG. CRANES AND SHALL BE PROPERLY SUPPORTED FROM (E) ROOF STRUC, WITH HOT DIPPED GALV STEEL HARDWARE.
3. CONTRACTOR SHALL FURNISH & INSTALL CLASS 1, DIV 1, GROUP D EXPLOSION PROOF, DUST IGNITION PROOF, CONDUIT OUTLET BODIES WITH PROPER GASKETS AND COVERS IN ALL BRANCH CIRCUIT CONDUITS AND MOTOR FEEDER WHERE REQUIRED FOR EASE OF PULLING CONDUCTORS.
4. CONNECT ALL EQUIP GND CONDUCTORS TO GND BUSS OF MCC.
5. MAKE FINAL CONNECTIONS TO CONVEYOR SPEED SWITCHES IN EXPLOSION PROOF J-BOX.
6. ALL J-BOXES, CONDUITS FITTINGS AND SEAL FITTINGS SHALL BE THREADED, UL LISTED, CLASS 1, GROUP D, DIV.1 TYPE BY CROUSE-HINDS OR APPELTON.

ABBREVIATIONS

DC =DRAG CHAIN	MCC=MOTOR CONTROL CENTER
COND =CONDUIT	CPT=CONTROL POWER TRANSFORMER
RGS =RIGID GALVANIZED STEEL	(E)=EXISTING
BEL =BUCKET ELEVATOR	(N)=NEW
ELEV =ELEVATION	CB=CIRCUIT BREAKER
AFG =ABOVE FINISHED GRADE	REF=REFER
AFF =ABOVE FINISHED FLR	FLR=FLOOR
APPROX=APPROXIMATE	MTD=MOUNTED
STRUC =STRUCTURE	CMU=CONCRETE MASONARY UNIT
MCP =MOTOR CIRCUIT PROTECTOR	GND=GROUND
CU =COPPER	GALV=GALVANIZED

PLAN KEYED NOTES:

1. (N) 600 AMP, 480 VOLT, FLR MTD MCC, REF TO DWG E27.
2. REMOVE (E) SPARE MOTOR STARTER, CPT, MCP AND CONTROL DEVICES FROM ONE SPARE MOTOR STARTER SECTION. INSTALL (N) 225 AMP, 3 POLE, 600 VOLT RATED THERMAL MAGNETIC BREAKER AND CONNECT LINE SIDE OF (N) CB TO (E) PHASE BUSS WITH 3/0 CU CONDUCTORS AND PROPER HARDWARE. AIC RATING OF (N) BREAKER SHALL BE THE SAME AS FOR (E) CB BUT NOT LESS THAN 22,000 AMP.
3. (E) MCC-3A AND 3B IS 480 VOLT, 3 PHASE, 800 AMP, WESTING HOUSE CONTRACTOR SHALL MAKE SITE VISIT AND OBTAIN ALL NECESSARY INFORMATION ON (E) MCC.
4. 2 1/2" RGS COND WITH 3# 3/0 AND 1, #4 GND CONDUCTORS.
5. COND AND CONDUCTORS DN TO TOP OF MCC. CONNECT PHASE WIRES TO LOAD SIDE OF (N) 225 CB AND GND CONDUCTOR TO EQUIP GND BUSS IN MCC.
6. COND AND CONDUCTORS DN TO TOP OF (N) MCC. CONNECT PHASE WIRES TO LUGS OF (N) MCC.
7. ALL (N) CONDS SHALL BE INSTALLED ABOVE (E) LAY-IN CLG ON UNISTRUT SUPPORT RACK. THE UNISTRUT RACK SHALL BE PROPERLY SUPPORTED FROM ROOF DECK AND CONCRETE BEAMS. ALL (N) CONDUITS LOCATIONS AND ELEVATIONS SHALL BE FIELD COORDINATED WITH (E) DUCTWORK, PIPING, CONDUITS AND FIXTURES.
8. CORE DRILL (E) CMU WALL ABOVE CLG FOR INSTALLATIONS OF (N) CONDUITS. SEAL WALL OPENINGS AROUND CONDS WITH UL LISTED FIRE SEALANT.
9. INSTALL UL LISTED, CLASS-1, GROUP-D DIVISION-1 SEAL FITTING IN EACH CONDUIT. SEAL FITTINGS SHALL BE SEALED OFF WITH APPROVED SEALANT AS REQUIRED. FITTINGS SHALL BE MANUFACTURED BY CROUSE-HINDS OR APPLETON.
10. CONDS DOWN ON WALL AND BELOW (N) WALKWAY BRIDGE. PROPERLY SUPPORT CONDS FROM WALL.
11. (N) CONDS WITH CONDUCTORS BELOW (N) WALKWAY BRIDGE FOR CONTINUATION REF TO DWG. E.26.
12. COND DN TO MOTOR, THRU A START/STOP STATION,MAKE FINAL CONNECTION IN EXPLOSION PROOF J-BOX
13. 1 1/2" RGS COND WITH 3 #6 AND 1 # 8 GND CONDUCTORS AND 3#12 CONTROL WIRES
14. 1" RGS COND WITH 3 # 10 PHASE AND 1 # 12 GND CONDUCTORS AND 5 #12 CONTROL WIRES.
15. START/STOP FACTORY SEALED STATION, REF TO GENERAL NOTE-4 ON DWG E-26.
16. 1/2" RGS COND WITH EXPLOSION PROOF FITTING WITH 2 # 12 CONTROL AND 1#12 GND WIRE.
17. 1/2" RGS COND WITH CONDUCTORS TO CONVEYOR SPEED SWITCH MAKE FINAL CONNECTION TO SWITCH AND INSTALL A SEAL FITTING WITHIN 18" OF SPEED SWITCH.
18. CONDUITS AND CONDUCTORS DN TO TOP OF MCC. INSTALL SEAL FITTINGS IN EACH COND WITHIN 18" OF TOP OF MCC.
19. 1 1/2" RGS COND WITH 3 #6 PHASE, 1 #10 GND CONDUCTORS AND 3 #12 CONTROL WIRES.
20. NEW 2" COND WITH CONDUCTORS UP FROM GND FLOOR.CONNECT PHASE WIRES TO LOAD SIDE OF EXISTING SPARE NEMA SIZE-4 MOTOR STARTER.INSTALL NEW ELEMENTS IN OVERLOAD RELAYS FOR 75 HP MOTOR.
21. INSTALL 2 NEW 20 AMP, 125 VOLT, 1 POLE CB IN EMPTY SPACES IN EXISTING 120/240 VOLT PANEL BOARD IN MCC-3A.
22. 3/4" COND WITH CONDUCTORS DN TO EXISTING 120/240 VOLT, 1 PH PNL BOARD. CONNECT PHASE WIRES TO LOAD SIDE ON NEW CB.
23. 3/4" COND WITH 2, PHASE, 2 NEUTRAL AND 1 GND ALL #12 CONDUCTORS.INSTALL COND ABOVE EXISTING CLG.
24. 3/4" COND AND CONDUCTORS DN TO NEW CONTROL PNL.

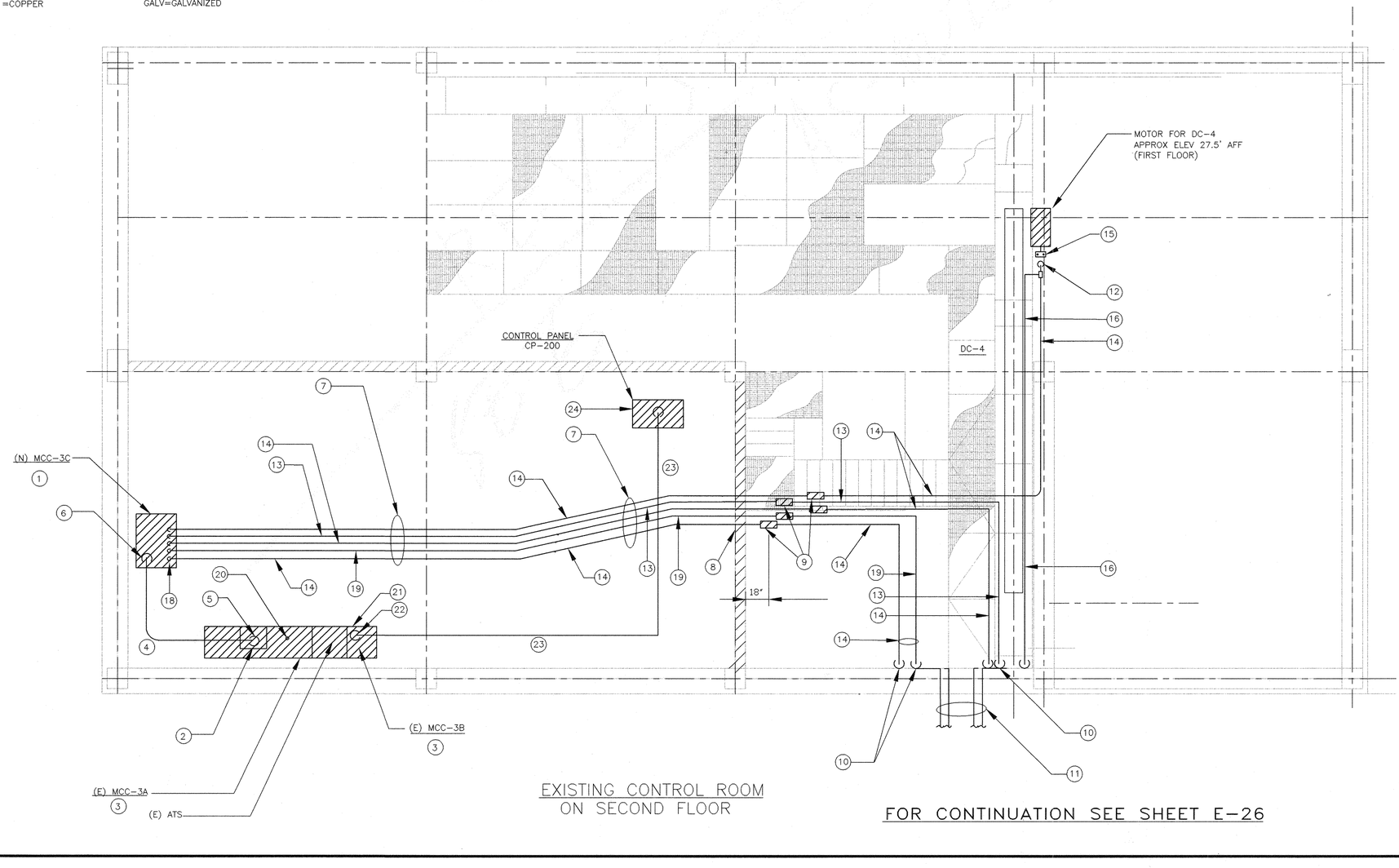

EXISTING CONTROL ROOM
ON SECOND FLOOR

FOR CONTINUATION SEE SHEET E-26

ORIGINAL SCALE IN INCHES
FOR REDUCED PLANS
0 1 2 3

REV NO	DESCRIPTION	APP'D	DATE

SEAL

SEAL
STATE OF TEXAS
M. C. DABHI
42122
LICENSED
PROFESSIONAL ENGINEER
2/24/99

DABHI ENGINEERING ASSOC. INC.
21210 PARK YORK DR., KATY, TEXAS
TEL (281) 492-6885, FAX (281) 492-8626

RATNALA & BAHL, INC.
Engineers • Architects • Surveyors
11767 KATY FREEWAY. SUITE 510
HOUSTON, TEXAS 77079

CH2M HILL
7600 West Tidwell Road, Suite 400
Houston Tx 77040
713.462.0161

Binkley & Barfield, Inc.
Consulting Engineers
1710 Seamist Drive Houston, Texas 77008

ALMEDA SIMS
BIOSOLIDS
DRYER REHABILITATION

CIP NO 0298-05-3
FILE NO: 4289-4

LOADING FACILITIES CONTROL ROOM
ELECTRICAL

CITY OF HOUSTON
DEPARTMENT OF PUBLIC WORKS AND ENGINEERING
ENGINEERING, CONSTRUCTION AND REAL ESTATE GROUP

SECTION APPROVALS

WATER ENGINEERING

TRAFFIC AND SIGNAL ENGINEERING

WASTEWATER ENGINEERING 2-25-99

STREET & BRIDGE ENGINEERING

STORMWATER ENGINEERING

CONSTRUCTION 2/26/99

2/25/99

OTHER DEPARTMENTS

PLANNING AND DEVELOPMENT

SPONSOR DEPARTMENT

CITY ENGINEER 3-2-99 DATE

DIRECTOR OF PUBLIC WORKS AND ENGINEERING 3/1/99 DATE

SUBMITTED:
SCALE: 1/4"=1'-0"
DATE:02/22/99
SURVEY BY: N/A
F B NO:

DESIGNED BY: MCD
DRAWN BY: PCB
DWG. NO. : E-25
SHT NO 157of 159 SHTS
CITY DWG NO: 35001

CADD DWG FILE NO :F:/64305/9847-E-25
FILE DATE-OPERATOR: 09-10-01 JRR

GENERAL NOTES:

1. CONDUITS ROUTINGS SHOWN HERE ARE APPROX. EXACT LOCATIONS SHALL BE FIELD COORDINATED WITH EXISTING CONDUITS, VENTILATION FANS, LIGHT FIXTURES, BLDG., ROOF STRUC, DUCT WORK, PIPING BLDG. CRANES AND OTHER UTILITIES.
2. ALL CONDUITS SHALL BE INSTALLED ABOVE (E) BLDG. CRANES AND SHALL BE PROPERLY SUPPORTED FROM (E) ROOF STRUC, WITH HOT DIPPED GALV STEEL HARDWARE.
3. CONTRACTOR SHALL FURNISH & INSTALL CLASS 1, DIV 1, GROUP D EXPLOSION PROOF, DUST IGNITION PROOF, CONDUIT OUTLET BODIES WITH PROPER GASKETS AND COVERS IN ALL BRANCH CIRCUIT CONDUITS AND MOTOR FEEDER WHERE REQUIRED FOR EASE OF PULLING CONDUCTORS.
4. CONNECT ALL EQUIP GND CONDUCTORS TO GND BUSS OF MCC.
5. MAKE FINAL CONNECTIONS TO CONVEYOR SPEED SWITCHES IN EXPLOSION PROOF J-BOX.
6. ALL J-BOXES, CONDUITS FITTINGS AND SEAL FITTINGS SHALL BE THREADED, UL LISTED, CLASS 1, GROUP D, DIV.1 TYPE BY CROUSE-HINDS OR APPELTON.

ABBREVIATIONS

DC	=DRAG CHAIN	MCC	=MOTOR CONTROL CENTER
COND	=CONDUIT	CPT	=CONTROL POWER TRANSFORMER
RGS	=RIGID GALVANIZED STEEL	(E)	=EXISTING
BEL	=BUCKET ELEVATOR	(N)	=NEW
ELEV	=ELEVATION	CB	=CIRCUIT BREAKER
AFG	=ABOVE FINISHED GRADE	REF	=REFER
AFF	=ABOVE FINISHED FLR	FLR	=FLOOR
APPROX	=APPROXIMATE	MTD	=MOUNTED
STRUC	=STRUCTURE	CMU	=CONCRETE MASONARY UNIT
MCP	=MOTOR CIRCUIT PROTECTOR	GND	=GROUND
CU	=COPPER	GALV	=GALVANIZED

PLAN KEYED NOTES:

1. (N) 600 AMP, 480 VOLT, FLR MTD MCC, REF TO DWG E27.
2. REMOVE (E) SPARE MOTOR STARTER, CPT, MCP AND CONTROL DEVICES FROM ONE SPARE MOTOR STARTER SECTION. INSTALL (N) 225 AMP, 3 POLE, 600 VOLT RATED THERMAL MAGNETIC BREAKER AND CONNECT LINE SIDE OF (N) CB TO (E) PHASE BUSS WITH 3/0 CU CONDUCTORS AND PROPER HARDWARE. AIC RATING OF (N) BREAKER SHALL BE THE SAME AS FOR (E) CB BUT NOT LESS THAN 22,000 AMP.
3. (E) MCC-3A AND 3B IS 480 VOLT, 3 PHASE, 800 AMP, WESTING HOUSE CONTRACTOR SHALL MAKE SITE VISIT AND OBTAIN ALL NECESSARY INFORMATION ON (E) MCC.
4. 2 1/2" RGS COND WITH 3# 3/0 AND 1, #4 GND CONDUCTORS.
5. COND AND CONDUCTORS DN TO TOP OF MCC. CONNECT PHASE WIRES TO LOAD SIDE OF (N) 225 CB AND GND CONDUCTOR TO EQUIP GND BUSS IN MCC.
6. COND AND CONDUCTORS DN TO TOP OF (N) MCC. CONNECT PHASE WIRES TO LUGS OF (N) MCC.
7. ALL (N) CONDS SHALL BE INSTALLED ABOVE (E) LAY-IN CLG ON UNISTRUT SUPPORT RACK. THE UNISTRUT RACK SHALL BE PROPERLY SUPPORTED FROM ROOF DECK AND CONCRETE BEAMS. ALL (N) CONDUITS LOCATIONS AND ELEVATIONS SHALL BE FIELD COORDINATED WITH (E) DUCTWORK, PIPING, CONDUITS AND FIXTURES.
8. CORE DRILL (E) CMU WALL ABOVE CLG FOR INSTALLATIONS OF (N) CONDUITS. SEAL WALL OPENINGS AROUND CONDS WITH UL LISTED FIRE SEALANT.
9. INSTALL UL LISTED, CLASS-1, GROUP-D DIVISION-1 SEAL FITTING IN EACH CONDUIT. SEAL FITTINGS SHALL BE SEALED OFF WITH APPROVED SEALANT AS REQUIRED. FITTINGS SHALL BE MANUFACTURED BY CROUSE-HINDS OR APPLETON.
10. CONDS DOWN ON WALL AND BELOW (N) WALKWAY BRIDGE. PROPERLY SUPPORT CONDS FROM WALL.
11. (N) CONDS WITH CONDUCTORS BELOW (N) WALKWAY BRIDGE FOR CONTINUATION REF TO DWG. E.26.
12. COND DN TO MOTOR, THRU A START/STOP STATION,MAKE FINAL CONNECTION IN EXPLOSION PROOF J-BOX
13. 1 1/2" RGS COND WITH 3 #6 AND 1 # 8 GND CONDUCTORS AND 3#12 CONTROL WIRES
14. 1" RGS COND WITH 3 # 10 PHASE AND 1 # 12 GND CONDUCTORS AND 5 #12 CONTROL WIRES.
15. START/STOP FACTORY SEALED STATION, REF TO GENERAL NOTE-4 ON DWG E-26.
16. 1/2" RGS COND WITH EXPLOSION PROOF FITTING WITH 2 # 12 CONTROL AND 1#12 GND WIRE.
17. 1/2" RGS COND WITH CONDUCTORS TO CONVEYOR SPEED SWITCH MAKE FINAL CONNECTION TO SWITCH AND INSTALL A SEAL FITTING WITHIN 18" OF SPEED SWITCH.
18. CONDUITS AND CONDUCTORS DN TO TOP OF MCC. INSTALL SEAL FITTINGS IN EACH COND WITHIN 18" OF TOP OF MCC.
19. 1 1/2" RGS COND WITH 3 #6 PHASE, 1 #10 GND CONDUCTORS AND 3 #12 CONTROL WIRES.
20. NEW 2" COND WITH CONDUCTORS UP FROM GND FLOOR.CONNECT PHASE WIRES TO LOAD SIDE OF EXISTING SPARE NEMA SIZE-4 MOTOR STARTER.INSTALL NEW ELEMENTS IN OVERLOAD RELAYS FOR 75 HP MOTOR.
21. INSTALL 2 NEW 20 AMP, 125 VOLT, 1 POLE CB IN EMPTY SPACES IN EXISTING 120/240 VOLT PANEL BOARD IN MCC-3A.
22. 3/4" COND WITH CONDUCTORS DN TO EXISTING 120/240 VOLT, 1 PH PNL BOARD. CONNECT PHASE WIRES TO LOAD SIDE ON NEW CB.
23. 3/4" COND WITH 2, PHASE, 2 NEUTRAL AND 1 GND ALL #12 CONDUCTORS.INSTALL COND ABOVE EXISTING CLG.
24. 3/4" COND AND CONDUCTORS DN TO NEW CONTROL PNL.

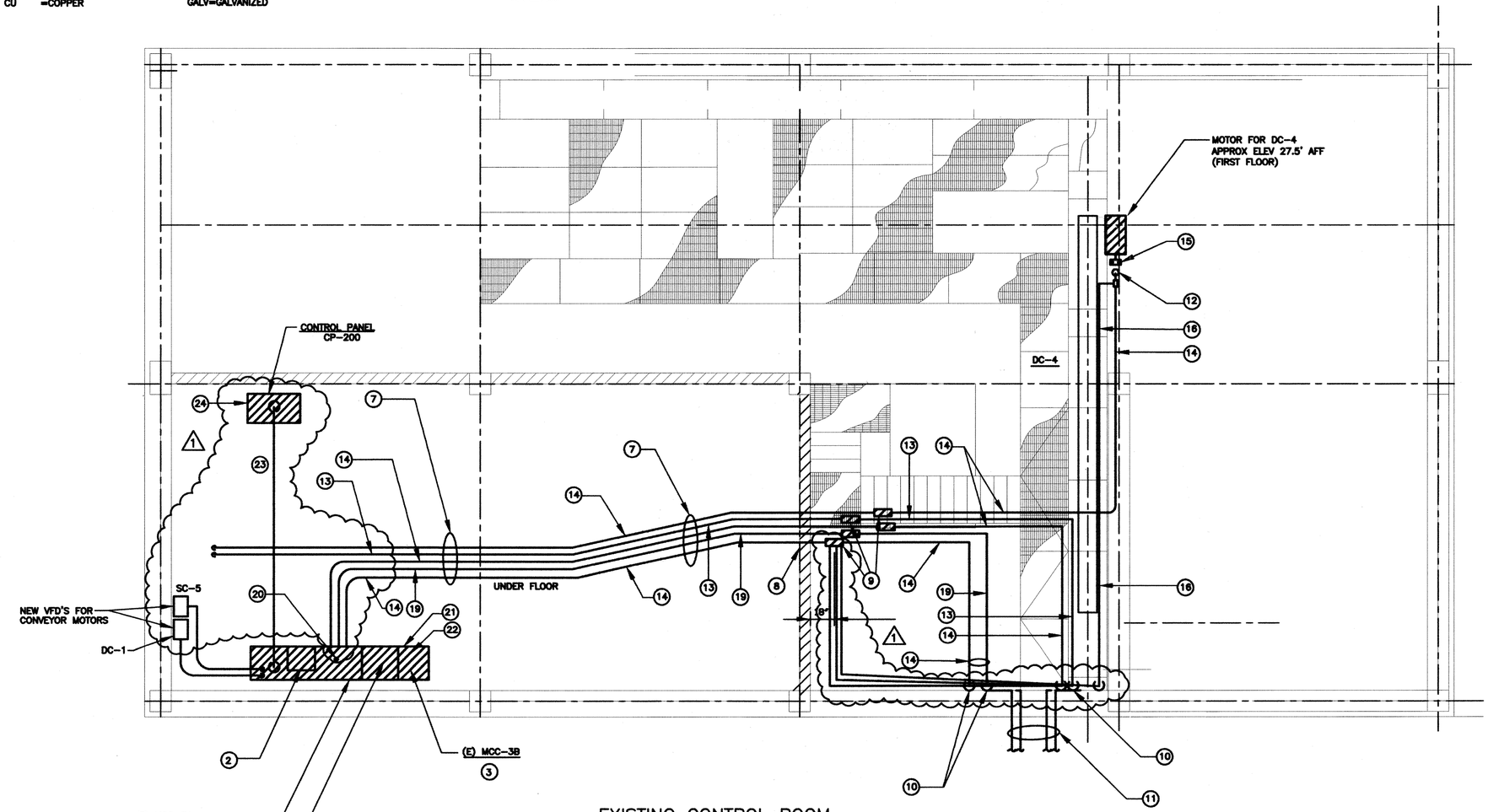

EXISTING CONTROL ROOM
ON SECOND FLOOR

FOR CONTINUATION SEE SHEET E-26

REV NO	DESCRIPTION	APP'D	DATE
1	AS BUILT DRAWING	DJR	12/01

SEAL

STATE OF TEXAS
DAVID J. ROSS
68267
REGISTERED
PROFESSIONAL ENGINEER

SEAL

AS-BUILT

DABHI ENGINEERING ASSOC. INC.
21210 PARK YORK DR., KATY, TEXAS
TEL (281) 492-6885, FAX (281) 492-8626

RATNALA & BAHL, INC.
Engineers • Architects • Surveyors
11767 KATY FREEWAY, SUITE 510
HOUSTON, TEXAS 77079

CH2M HILL
7600 West Tidwell Road, Suite 400
Houston Tx 77040
713.462.0161

Binkley & Barfield, Inc.
Consulting Engineers
1710 Seamist Drive Houston, Texas 77008

ALMEDA SIMS
BIOSOLIDS
DRYER REHABILITATION

CIP NO 0298-05-3
FILE NO: 4289-4

LOADING FACILITIES CONTROL ROOM
ELECTRICAL

CITY OF HOUSTON
DEPARTMENT OF PUBLIC WORKS AND ENGINEERING
ENGINEERING, CONSTRUCTION AND REAL ESTATE GROUP

SECTION APPROVALS

WATER ENGINEERING
TRAFFIC AND SIGNAL ENGINEERING
WASTEWATER ENGINEERING
STREET & BRIDGE ENGINEERING
STORMWATER ENGINEERING
CONSTRUCTION

OTHER DEPARTMENTS

PLANNING AND DEVELOPMENT
SPONSOR DEPARTMENT

CITY ENGINEER — DATE
DIRECTOR OF PUBLIC WORKS AND ENGINEERING — DATE

SUBMITTED:
SCALE: 1/4"=1'-0"
DATE: 02/22/99
SURVEY BY: N/A
F B NO:

DESIGNED BY: MCD
DRAWN BY: PCB
DWG. NO.: E-25
SHT NO 157 of 159 SHTS
CITY DWG NO: 35001

ORIGINAL SCALE IN INCHES
FOR REDUCED PLANS
0 1 2 3

CADD DWG FILE NO :F:/64305/9847-E-26
FILE DATE:-OPERATOR: 02/22/99 PCB

GENERAL NOTES:

1. MOTOR LOCATIONS AND ELEVATIONS SHOWN ON THIS DWG ARE APPROX. EXACT LOCATIONS AND ELEVATIONS SHALL BE OBTAINED BY FIELD MEASUREMENTS.
2. GENERAL ROUTINGS OF CONDUITS ARE INDICATED CONTRACTOR SHALL FIELD LOCATE ALL CONDUITS AND PROPERLY SUPPORT THEM FROM CONVEYOR AND ELEVATOR SUPPORT STRUCTURES.
3. CONTRACTOR SHALL FURNISH AND INSTALL ALL REQUIRED CHANNELS, ANGLES UNISTRUT MEMBERS AND OTHER HARDWARE AS REQUIRED FOR PROPER INSTALLATIONS OF CONDS, J-BOXES ETC. ALL STEEL SUPPORT SHALL BE HOT DIPPED GALV.
4. FINAL CONNECTIONS TO MOTORS SHALL BE MADE IN UL LISTED, CLASS 1, GROUP-D, DIVISION-1 EXPLOSION PROOF FACTORY SEALED START/STOP STATION. THEY SHALL BE MADE AS PER MFGR'S RECOMMENDATIONS. START/STOP FACTORY SEALED STATION SHALL BE PROPERLY INSTALLED NEAR MOTOR AND SHALL BE RIGIDLY SECURED TO NEAR BY STRUC. START/STOP STATION SHALL BE DUST-IGNITIONPROOF, RAINTIGHT, WITH CONTACTS SEALED IN SEPERATE CHAMBER. IT SHALL BE CROUSE-HINDS SER. EFD.
5. ALL CONDUITS SHALL BE INSTALLED WITH A MINIMUM NUMBER OF FITTINGS AS REQUIRED. ALL FITTINGS SHALL BE RGS THREADED, RAINTIGHT, UL LISTED, CLASS 1, GROUP-D, DIVISION 1 EXPLOSION PROOF TYPE.
6. ALL RGS CONDUITS AND FITTINGS SHALL BE PVC COATED.

PLAN KEYED NOTES FOR STORAGE FACILITY ELEC. PLAN

(1) CONDUITS WITH CONDUCTORS SHALL BE INSTALLED UNDER NEW WALKWAY BRIDGE AT APPOX. ELEVATION OF 25 FEET AFG. THEY SHALL BE PROPERLY SUPPORTED FROM WALKWAY BRIDGE STRUCTURE.

(2) FOR CONTINUATION REF TO DWG E-25.

(3) COND WITH CONDUCTORS DN TO MOTOR THRU START/STOP STATION MAKE FINAL CONNECTION IN EXPLOSION PROOF J-BOX.

(4) 1 1/2" RGS COND WITH 3 #6 PHASE AND 1 #8 GND CONDUCTORS. AND 3 #12 CONTROL WIRES.

(5) 1 1/2" RGS COND WITH 3 #6 AND 1 #10 GND CONDUCTORS AND 3 #12 CONTROL WIRES.

(6) CLASS-1, GROUP-D, DIV-1, EXPLOSIONPROOF CONDULET TEE.

(7) 1/2" RGS COND WITH 2 #12 CONTROL AND 1 #12 GND CONDUCTORS.

(8) INSTALL UL LISTED, CLASS-1, GROUP D, DIV 1 SEAL FITTING, WITHIN 18" OF SPEED SWITCH, AND PROPERLY SEAL IT.

(9) SPEED SWITCH BY CONVEYOR MFGR.

(10) START/STOP FACTORY SEALED STATION, REF TO GENERAL NOTE-4.

(11) 1/2" COND WITH CONDUCTORS TO SPEED SWITCH SHALL BE LOCATED AT THE END OF CONVEYOR.

(12) 1" RGS COND WITH 3 #10 PHASE, 1 #12 GND CONDUCTORS AND 5 #12 CONTROL WIRES.

FOR CONTINUATION SEE SHEET E-25

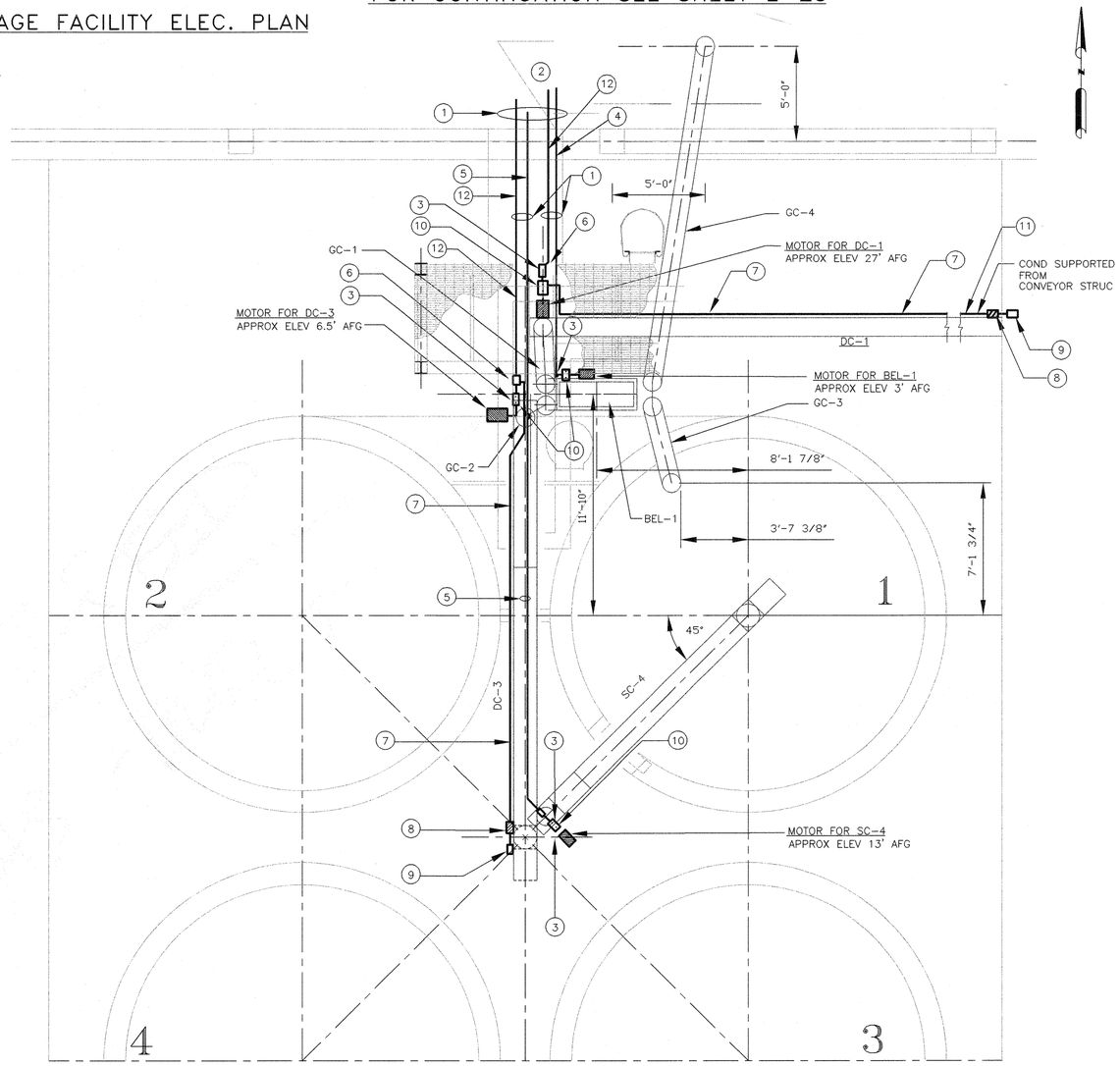

STORAGE FACILITIES ELECTRICAL LAYOUT
1/4"=1'-0"

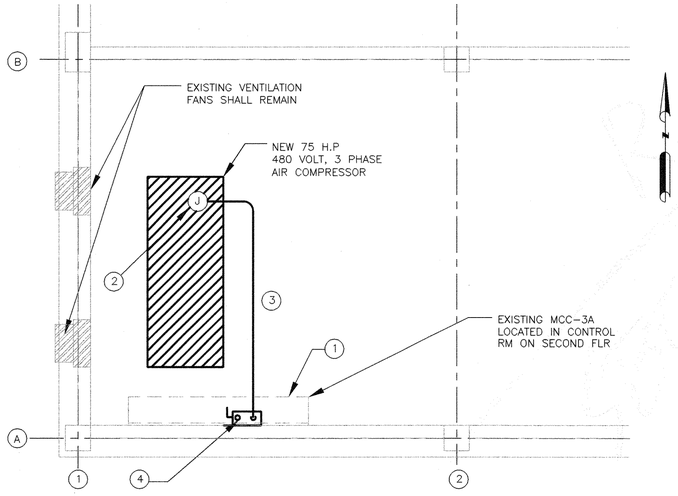

PARTIAL GROUND FLOOR-ELECTRICAL PLAN
1/4"=1'-0"

PLAN KEYED NOTES FOR NEW AIR COMPRESSOR-GND FLR

(1) INSTALL NEW 200 AMP, 480 VOLT,3 POLE, UL LISTED CLASS 1, GROUP D, DIV 1, NON FUSED DISCONNECT SWITCH ON WALL, AFTER EXISTING CONDUITS FROM WALL ARE REMOVED. SWITCH SHALL BE BY CROUSE-HINDS OR APPROVED EQUAL.

(2) 2" RGS COND WITH 3 #2/0 AND 1 #6 GND CONDUCTORS, ALL FITTINGS SHALL BE EXPLOSION PROOF. INSTALL COND UNDER SECOND FLOOR SLAB.

(3) MAKE FINAL CONNECTION TO NEW COMPRESSOR IN EXPLOSION PROOF J-BOX FIELD VERIFY EXACT LOCATION WITH COMPRESSOR MFGR.

(4) 2" RGS COND WITH 3 #2/0 AND 1 #6 GND CONDUCTORS UP THRU FLOOR TO EXISTING NEMA SIZE-4 MOTOR STARTER IN EXISTING MCC-3A. INSTALL UL LISTED CLASS 1, GROUP D, DIV 1 SEAL FITTING 18" BELOW SECOND FLOOR SLAB.

ORIGINAL SCALE IN INCHES FOR REDUCED PLANS
0 1 2 3

REV NO	DESCRIPTION	APP'D	DATE

SEAL

SEAL
STATE OF TEXAS
M. C. DABHI
REG. 46122
REGISTERED PROFESSIONAL ENGINEER
2/24/99

DABHI ENGINEERING ASSOC. INC.
21210 PARK YORK DR., KATY, TEXAS
TEL (281) 492-6885, FAX (281) 492-8626

RATNALA & BAHL, INC.
Engineers • Architects • Surveyors
11767 KATY FREEWAY. SUITE 510
HOUSTON, TEXAS 77079

CH2M HILL
7600 West Tidwell Road, Suite 400
Houston Tx 77040
713.462.0161

Binkley & Barfield, Inc.
Consulting Engineers
1710 Seamist Drive Houston, Texas 77008

ALMEDA SIMS
BIOSOLIDS
DRYER REHABILITATION

CIP NO 0298-05-3
FILE NO: 4289-4

STORAGE FACILITIES
ELECTRICAL LAYOUT

CITY OF HOUSTON
DEPARTMENT OF PUBLIC WORKS AND ENGINEERING
ENGINEERING, CONSTRUCTION AND REAL ESTATE GROUP

SECTION APPROVALS

WATER ENGINEERING
TRAFFIC AND SIGNAL ENGINEERING
WASTEWATER ENGINEERING 2-25-99
STREET & BRIDGE ENGINEERING
STORMWATER ENGINEERING
CONSTRUCTION 3/2/99
2/25/99

OTHER DEPARTMENTS

PLANNING AND DEVELOPMENT
SPONSOR DEPARTMENT
CITY ENGINEER 3-2-99 DATE
DIRECTOR OF PUBLIC WORKS AND ENGINEERING 3/5/99 DATE

SUBMITTED:
SCALE: 1/4"=1'-0"
DATE:02/22/99
SURVEY BY: N/A
F B NO:

DESIGNED BY: MCD
DRAWN BY: PCB
DWG. NO. : E-26
SHT NO 158 of 159 SHTS
CITY DWG NO: 35001

CADD DWG FILE NO :F:/64305/9847-E-26
FILE DATE-OPERATOR: 09/10/01 JRR

GENERAL NOTES:

1. MOTOR LOCATIONS AND ELEVATIONS SHOWN ON THIS DWG ARE APPROX. EXACT LOCATIONS AND ELEVATIONS SHALL BE OBTAINED BY FIELD MEASUREMENTS.
2. GENERAL ROUTINGS OF CONDUITS ARE INDICATED CONTRACTOR SHALL FIELD LOCATE ALL CONDUITS AND PROPERLY SUPPORT THEM FROM CONVEYOR AND ELEVATOR SUPPORT STRUCTURES.
3. CONTRACTOR SHALL FURNISH AND INSTALL ALL REQUIRED CHANNELS, ANGLES UNISTRUT MEMBERS AND OTHER HARDWARE AS REQUIRED FOR PROPER INSTALLATIONS OF CONDS, J-BOXES ETC. ALL STEEL SUPPORT SHALL BE HOT DIPPED GALV.
4. FINAL CONNECTIONS TO MOTORS SHALL BE MADE IN UL LISTED, CLASS 1, GROUP-D, DIVISION-1 EXPLOSION PROOF FACTORY SEALED START/STOP STATION. THEY SHALL BE MADE AS PER MFGR'S RECOMMENDATIONS. START/STOP FACTORY SEALED STATION SHALL BE PROPERLY INSTALLED NEAR MOTOR AND SHALL BE RIGIDLY SECURED TO NEAR BY STRUC. START/STOP STATION SHALL BE DUST-IGNITIONPROOF, RAINTIGHT, WITH CONTACTS SEALED IN SEPERATE CHAMBER. IT SHALL BE CROUSE-HINDS SER. EFD.
5. ALL CONDUITS SHALL BE INSTALLED WITH A MINIMUM NUMBER OF FITTINGS AS REQUIRED. ALL FITTINGS SHALL BE RGS THREADED, RAINTIGHT, UL LISTED, CLASS 1, GROUP-D, DIVISION 1 EXPLOSION PROOF TYPE.
6. ALL RGS CONDUITS AND FITTINGS SHALL BE PVC COATED.

PLAN KEYED NOTES FOR STORAGE FACILITY ELEC. PLAN

1. CONDUITS WITH CONDUCTORS SHALL BE INSTALLED UNDER NEW WALKWAY BRIDGE AT APPOX. ELEVATION OF 25 FEET AFG. THEY SHALL BE PROPERLY SUPPORTED FROM WALKWAY BRIDGE STRUCTURE.
2. FOR CONTINUATION REF TO DWG E-25.
3. COND WITH CONDUCTORS DN TO MOTOR THRU START/STOP STATION MAKE FINAL CONNECTION IN EXPLOSION PROOF J-BOX.
4. 1 1/2" RGS COND WITH 3 #6 PHASE AND 1 #8 GND CONDUCTORS. AND 3 #12 CONTROL WIRES.
5. 1 1/2" RGS COND WITH 3 #6 AND 1 #10 GND CONDUCTORS AND 3 #12 CONTROL WIRES.
6. CLASS-1, GROUP-D, DIV-1, EXPLOSIONPROOF CONDULET TEE.
7. 1/2" RGS COND WITH 2 #12 CONTROL AND 1 #12 GND CONDUCTORS.
8. INSTALL UL LISTED, CLASS-1, GROUP D, DIV 1 SEAL FITTING, WITHIN 18" OF SPEED SWITCH, AND PROPERLY SEAL IT.
9. SPEED SWITCH BY CONVEYOR MFGR.
10. START/STOP FACTORY SEALED STATION, REF TO GENERAL NOTE-4.
11. 1/2" COND WITH CONDUCTORS TO SPEED SWITCH SHALL BE LOCATED AT THE END OF CONVEYOR.
12. 1" RGS COND WITH 3 #10 PHASE, 1 #12 GND CONDUCTORS AND 5 #12 CONTROL WIRES.

FOR CONTINUATION SEE SHEET E-25

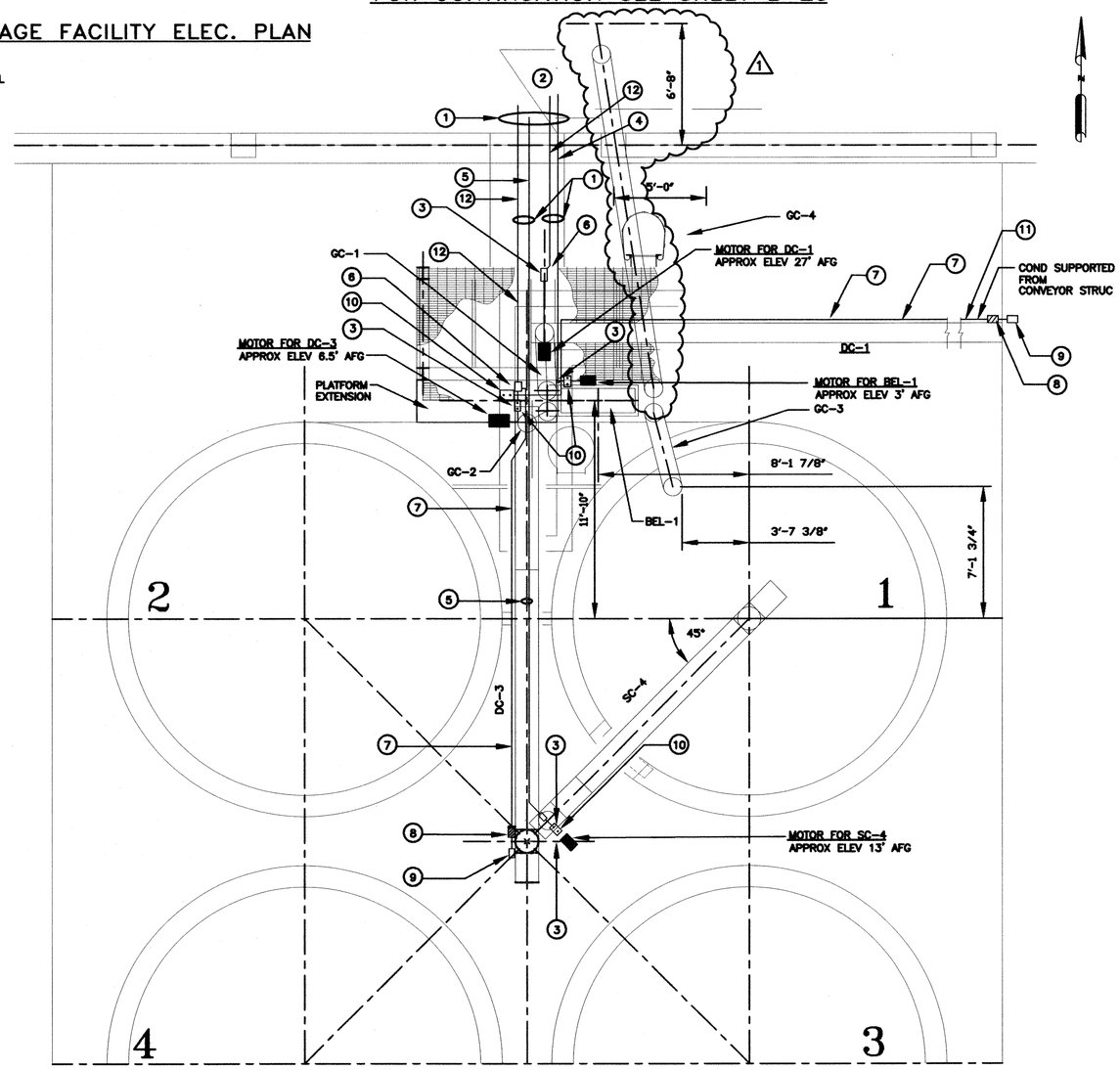

STORAGE FACILITIES ELECTRICAL LAYOUT
1/4"=1'-0"

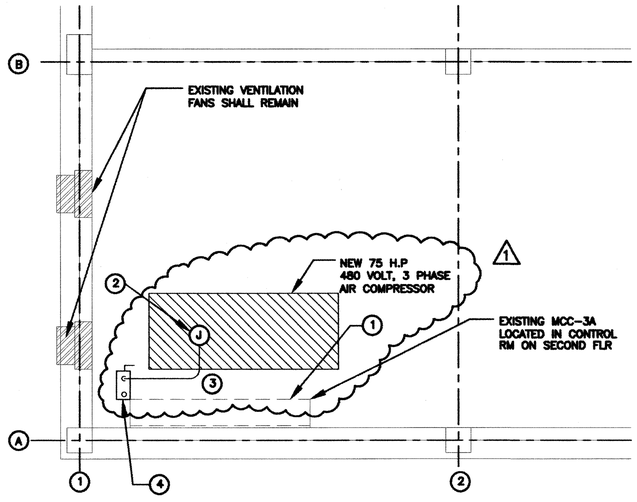

PARTIAL GROUND FLOOR-ELECTRICAL PLAN
1/4"=1'-0"

PLAN KEYED NOTES FOR NEW AIR COMPRESSOR-GND FLR

1. INSTALL NEW 200 AMP, 480 VOLT,3 POLE, UL LISTED CLASS 1, GROUP D, DIV 1, NON FUSED DISCONNECT SWITCH ON WALL, AFTER EXISTING CONDUITS FROM WALL ARE REMOVED. SWITCH SHALL BE BY CROUSE-HINDS OR APPROVED EQUAL.
2. 2" RGS COND WITH 3 #2/0 AND 1 #6 GND CONDUCTORS, ALL FITTINGS SHALL BE EXPLOSION PROOF. INSTALL COND UNDER SECOND FLOOR SLAB.
3. MAKE FINAL CONNECTION TO NEW COMPRESSOR IN EXPLOSION PROOF J-BOX FIELD VERIFY EXACT LOCATION WITH COMPRESSOR MFGR.
4. 2" RGS COND WITH 3 #2/0 AND 1 #6 GND CONDUCTORS UP THRU FLOOR TO EXISTING NEMA SIZE-4 MOTOR STARTER IN EXISTING MCC-3A. INSTALL UL LISTED CLASS 1, GROUP D, DIV 1 SEAL FITTING 18" BELOW SECOND FLOOR SLAB.

ORIGINAL SCALE IN INCHES FOR REDUCED PLANS
0 1 2 3

REV NO	DESCRIPTION	APP'D	DATE
1	AS BUILT DRAWING	DJR	12/01

SEAL
STATE OF TEXAS
DAVID J. ROSS
68267
REGISTERED PROFESSIONAL ENGINEER

SEAL
AS-BUILT

DABHI ENGINEERING ASSOC. INC.
21210 PARK YORK DR., KATY, TEXAS
TEL (281) 492-6885, FAX (281) 492-8626

RATNALA & BAHL, INC.
Engineers • Architects • Surveyors
11767 KATY FREEWAY, SUITE 510
HOUSTON, TEXAS 77079

CH2M HILL
7600 West Tidwell Road, Suite 400
Houston Tx 77040
713.462.0161

Binkley & Barfield, Inc.
Consulting Engineers
1710 Seamist Drive Houston, Texas 77008

ALMEDA SIMS
BIOSOLIDS
DRYER REHABILITATION

CIP NO 0298-05-3
FILE NO: 4289-4

STORAGE FACILITIES
ELECTRICAL LAYOUT

CITY OF HOUSTON
DEPARTMENT OF PUBLIC WORKS AND ENGINEERING
ENGINEERING, CONSTRUCTION AND REAL ESTATE GROUP

SECTION APPROVALS

WATER ENGINEERING	TRAFFIC AND SIGNAL ENGINEERING
WASTEWATER ENGINEERING	STREET & BRIDGE ENGINEERING
STORMWATER ENGINEERING	CONSTRUCTION

OTHER DEPARTMENTS

PLANNING AND DEVELOPMENT	SPONSOR DEPARTMENT

CITY ENGINEER _____ DATE _____

DIRECTOR OF PUBLIC WORKS AND ENGINEERING _____ DATE _____

SUBMITTED:
SCALE: 1/4"=1'-0"
DATE: 02/22/99
SURVEY BY: N/A
F B NO:

DESIGNED BY: MCD
DRAWN BY: PCB
DWG. NO. : E-26
SHT NO 158 of 159 SHTS
CITY DWG NO: 35001

CADD DWG FILE NO :F:/64305/8847-E-27
FILE DATE-OPERATOR: 02/22/99 PCB

MCC-3C/CONVEYOR MOTOR SCHEDULE

MCC DESIG.	MCC CKT NO.	VENTILATION FAN FAN DESIG.	H.P
MCC-3C	1	DRAG CHAIN DC-1	5
	2	BUCKET ELEV BEL-1	25
	3	SCREW CONVEYOR SC-4	15
	4	DRAG CHAIN DC-3	5
	5	DRAG CHAIN DC-4	5
	6	SPACE	
	7	SPACE	
	8	SPACE	
	9	SPACE	

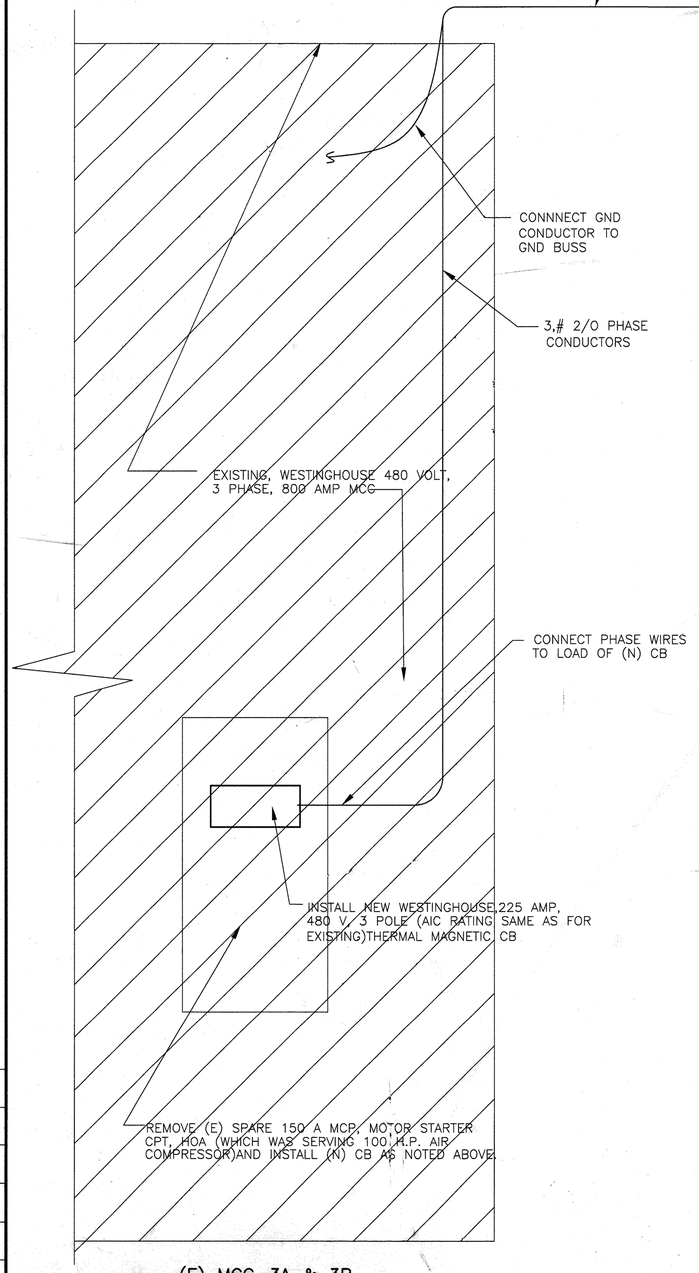

(E) MCC-3A & 3B

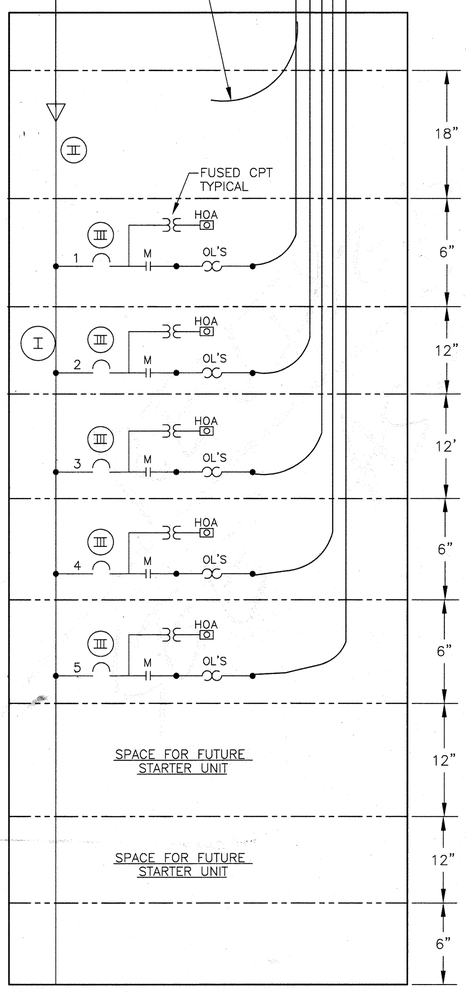

(N) MOTOR CONTROL CENTER MCC-3C

NEW MOTOR CONTROL CENTER MCC-3C

ITEM	CIRCUIT	DESCRIPTION	RATING
I	--		
		VOLTAGE RATING	480V
		MAIN HORIZONTAL BUS	600A
		VERTICAL BUS	300A
		GROUND BUS	300A
		NEUTRAL SIZE & TYPE	NONE
		AVAILABLE FAULT	22KA SYM
		BUS BRACING	42KA SYM
II	--	MAIN LUGS ONLY	
		3 POLE - TYPE	--
		MOUNTING	--
		VOLTAGE RATING	--
		FRAME SIZE	--
		TRIP SETTING	--
		INTERRUPT CAPACITY	--
		OPTIONS	--
III	1 AND 3 THRU 5	MOTOR STARTERS FOR DRAG CHAIN CONVEYORS	
		QUANTITY	5
		MOUNTING	FIXED
		SHORT CIRCUIT PROTECTION	
		3 POLE - TYPE	MCP
		VOLTAGE RATING	480V
		FRAME SIZE	100A
		TRIP SETTING	FIELD ADJ
		INTERRUPT CAPACITY	22KA SYM
		MOTOR STARTING CONTACTOR	
		3 POLE - TYPE	AIR
		VOLTAGE RATING	480V
		SIZE/CURRENT RATING	NEMA 1*
		OVERLOAD PROTECTION	
		TYPE	THERMAL OVERLOAD
		CT RATIO	-

* 1. MOTOR STARTER FOR CIRCUIT #2 SERVING BUCKET ELEVATOR (BEL-1) SHALL BE NEMA SIZE 2.
* 2. MOTOR STARTER FOR CIRCUIT #3 SERVING SCREW CONVEYOR SC-4 SHALL BE NEMA SIZE-2,

MCP = MOTOR CIRCUIT PROTECTOR
ADJ = ADJUSTABLE

GENERAL NOTES FOR MOTOR CONTROL CENTER

1. EACH NEMA SIZE-1 MOTOR STARTER SHALL BE A COMPACT, FVNR, UL LISTED, IN 6" HIGH COMPARTMENT. EACH STARTER SHALL HAVE AN INDIVIDUAL MINIMUM 50 VA FUSED CONTROL POWER TRANSFORMER, 1 NC & 1 NO AUXILIARY CONTACTS, A HAND-OFF-AUTO SELECTOR SWITCH, AND RED "ON" PILOT LIGHT, ALL FURNISHED, INSTALLED, AND FACTORY WIRED.
2. ALL BUSS SHALL BE TIN PLATED COPPER.
3. ENCLOSURES FOR MCC SHALL BE NEMA 1 TYPE WITH FISHTAPE BARRIERS.
4. ALL WIRING SHALL BE NEMA 1B.
5. OVERALL DIMENSIONS SHALL BE AS FOLLOWS:
   20" WIDE X 20" DEEP (MAXIMUM) X 96" HIGH.
6. SPARE SECTIONS OF MCC SHALL HAVE BUS INSTALLED FOR FUTURE INSTALLATIONS OF SHORT CIRCUIT PROTECTION DEVICES AND STARTERS.
7. MOTOR CONTROL CENTER SHALL BE SQUARE-D OR APPROVED EQUAL G.E, CUTLER HAMMER, OR ITE SIEMENS

ORIGINAL SCALE IN INCHES FOR REDUCED PLANS
0 1 2 3

REV NO	DESCRIPTION	APP'D	DATE

SEAL

SEAL
STATE OF TEXAS
M. C. DABHI
S.P. 46122
REGISTERED PROFESSIONAL ENGINEER
2/24/99

DABHI ENGINEERING ASSOC. INC.
21210 PARK YORK DR., KATY, TEXAS
TEL (281) 492-6885, FAX (281) 492-8626

RATNALA & BAHL, INC.
Engineers • Architects • Surveyors
11767 KATY FREEWAY. SUITE 510
HOUSTON, TEXAS 77079

CH2M HILL
7600 West Tidwell Road, Suite 400
Houston Tx 77040
713.462.0161

Binkley & Barfield, Inc.
Consulting Engineers
1710 Seamist Drive Houston, Texas 77008

ALMEDA SIMS
BIOSOLIDS
DRYER REHABILITATION

CIP NO 0298-05-3
FILE NO: 4289-4

NEW MOTOR CONTROL SCHEMATIC

CITY OF HOUSTON
DEPARTMENT OF PUBLIC WORKS AND ENGINEERING
ENGINEERING, CONSTRUCTION AND REAL ESTATE GROUP

SECTION APPROVALS

WATER ENGINEERING
TRAFFIC AND SIGNAL ENGINEERING
WASTEWATER ENGINEERING 2-25-99
STREET & BRIDGE ENGINEERING
STORMWATER ENGINEERING
CONSTRUCTION 3/2/99
2/25/99
OTHER DEPARTMENTS
PLANNING AND DEVELOPMENT
SPONSOR DEPARTMENT
CITY ENGINEER 3-2-99 DATE
DIRECTOR OF PUBLIC WORKS AND ENGINEERING 3/1/99 DATE

SUBMITTED:	DESIGNED BY: MCD
SCALE: NONE	DRAWN BY: PCB
DATE: 02/22/99	DWG. NO. : E-27
SURVEY BY: N/A	SHT NO 159 of 159 SHTS
F B NO:	CITY DWG NO: 35001

CADD DWG FILE NO :F:/64305/9847-E-27
FILE DATE-OPERATOR: 09-10-01 JRR

MCC-3C/CONVEYOR MOTOR SCHEDULE

MCC DESIG.	MCC CKT NO.	VENTILATION FAN FAN DESIG.	H.P
MCC "A"	1	DRAG CHAIN DC-1	5
	2	BUCKET ELEV BEL-1	25
	3	SCREW CONVEYOR SC-4	15
	4	DRAG CHAIN DC-3	5
	5	DRAG CHAIN DC-4	5
	6	SPACE	
	7	SPACE	
	8	SPACE	
	9	SPACE	

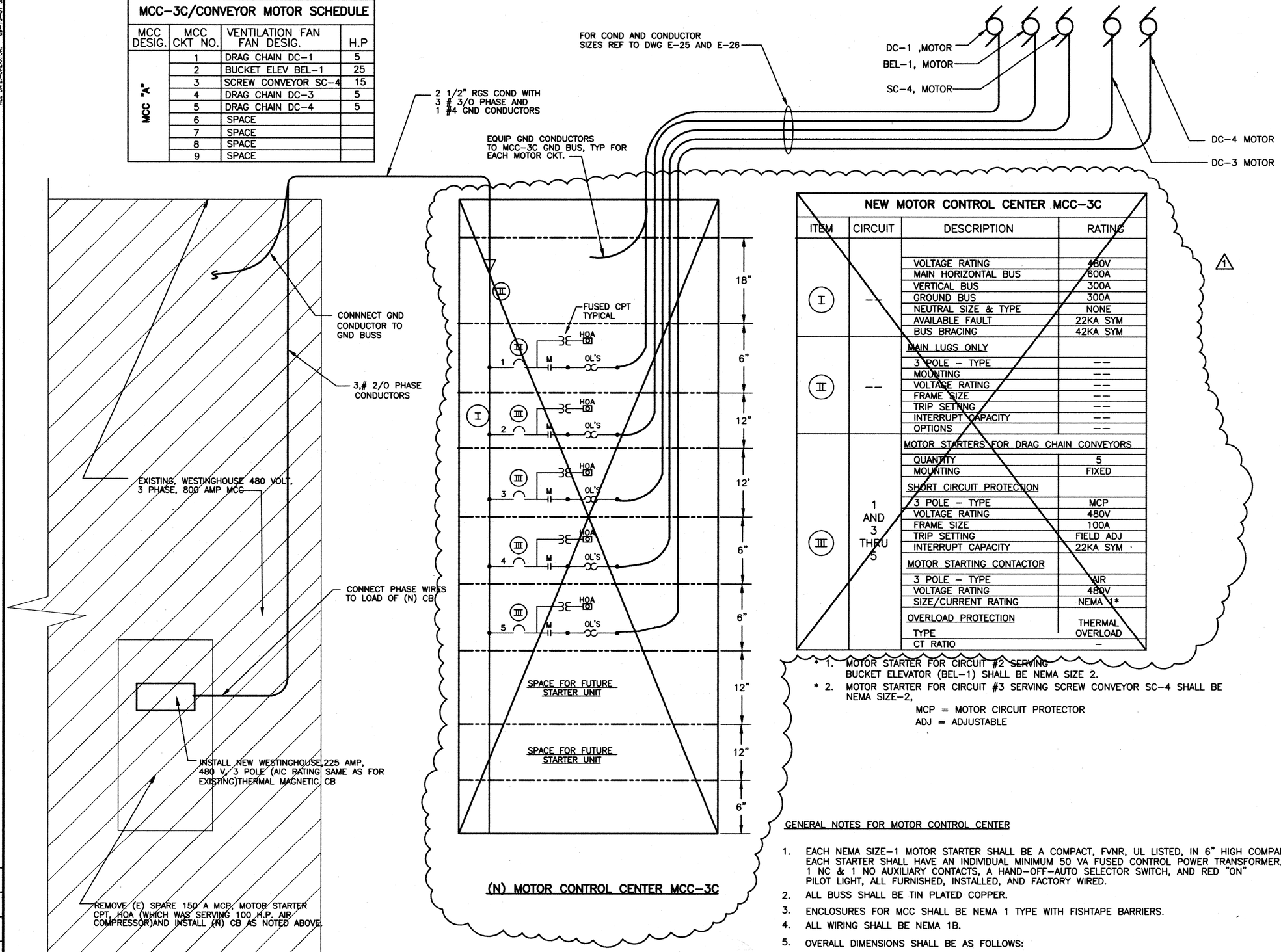

NEW MOTOR CONTROL CENTER MCC-3C

ITEM	CIRCUIT	DESCRIPTION	RATING
I	--		
		VOLTAGE RATING	480V
		MAIN HORIZONTAL BUS	600A
		VERTICAL BUS	300A
		GROUND BUS	300A
		NEUTRAL SIZE & TYPE	NONE
		AVAILABLE FAULT	22KA SYM
		BUS BRACING	42KA SYM
II	--	MAIN LUGS ONLY	
		3 POLE - TYPE	--
		MOUNTING	--
		VOLTAGE RATING	--
		FRAME SIZE	--
		TRIP SETTING	--
		INTERRUPT CAPACITY	--
		OPTIONS	--
III	1 AND 3 THRU 5	MOTOR STARTERS FOR DRAG CHAIN CONVEYORS	
		QUANTITY	5
		MOUNTING	FIXED
		SHORT CIRCUIT PROTECTION	
		3 POLE - TYPE	MCP
		VOLTAGE RATING	480V
		FRAME SIZE	100A
		TRIP SETTING	FIELD ADJ
		INTERRUPT CAPACITY	22KA SYM
		MOTOR STARTING CONTACTOR	
		3 POLE - TYPE	AIR
		VOLTAGE RATING	480V
		SIZE/CURRENT RATING	NEMA 1*
		OVERLOAD PROTECTION TYPE	THERMAL OVERLOAD
		CT RATIO	-

* 1. MOTOR STARTER FOR CIRCUIT #2 SERVING BUCKET ELEVATOR (BEL-1) SHALL BE NEMA SIZE 2.

* 2. MOTOR STARTER FOR CIRCUIT #3 SERVING SCREW CONVEYOR SC-4 SHALL BE NEMA SIZE-2,

MCP = MOTOR CIRCUIT PROTECTOR
ADJ = ADJUSTABLE

GENERAL NOTES FOR MOTOR CONTROL CENTER

1. EACH NEMA SIZE-1 MOTOR STARTER SHALL BE A COMPACT, FVNR, UL LISTED, IN 6" HIGH COMPARTMENT. EACH STARTER SHALL HAVE AN INDIVIDUAL MINIMUM 50 VA FUSED CONTROL POWER TRANSFORMER, 1 NC & 1 NO AUXILIARY CONTACTS, A HAND-OFF-AUTO SELECTOR SWITCH, AND RED "ON" PILOT LIGHT, ALL FURNISHED, INSTALLED, AND FACTORY WIRED.
2. ALL BUSS SHALL BE TIN PLATED COPPER.
3. ENCLOSURES FOR MCC SHALL BE NEMA 1 TYPE WITH FISHTAPE BARRIERS.
4. ALL WIRING SHALL BE NEMA 1B.
5. OVERALL DIMENSIONS SHALL BE AS FOLLOWS:
   20" WIDE X 20" DEEP (MAXIMUM) X 96" HIGH.
6. SPARE SECTIONS OF MCC SHALL HAVE BUS INSTALLED FOR FUTURE INSTALLATIONS OF SHORT CIRCUIT PROTECTION DEVICES AND STARTERS.
7. MOTOR CONTROL CENTER SHALL BE SQUARE-D OR APPROVED EQUAL G.E, CUTLER HAMMER, OR ITE SIEMENS

ORIGINAL SCALE IN INCHES FOR REDUCED PLANS
0 1 2 3

REV NO	DESCRIPTION	APP'D	DATE
1	AS BUILT DRAWING	DJR	12/01

SEAL
STATE OF TEXAS
DAVID J. ROSS
68267
REGISTERED PROFESSIONAL ENGINEER

SEAL
AS-BUILT

DABHI ENGINEERING ASSOC. INC.
21210 PARK YORK DR., KATY, TEXAS
TEL (281) 492-6885, FAX (281) 492-8626

RATNALA & BAHL, INC.
Engineers • Architects • Surveyors
11767 KATY FREEWAY, SUITE 510
HOUSTON, TEXAS 77079

CH2M HILL
7600 West Tidwell Road, Suite 400
Houston Tx 77040
713.462.0161

Binkley & Barfield, Inc.
Consulting Engineers
1710 Seamist Drive Houston, Texas 77008

ALMEDA SIMS
BIOSOLIDS
DRYER REHABILITATION

CIP NO 0298-05-3
FILE NO: 4289-4

NEW MOTOR CONTROL SCHEMATIC

CITY OF HOUSTON
DEPARTMENT OF PUBLIC WORKS AND ENGINEERING
ENGINEERING, CONSTRUCTION AND REAL ESTATE GROUP

SECTION APPROVALS

WATER ENGINEERING
TRAFFIC AND SIGNAL ENGINEERING
WASTEWATER ENGINEERING
STREET & BRIDGE ENGINEERING
STORMWATER ENGINEERING
CONSTRUCTION

OTHER DEPARTMENTS

PLANNING AND DEVELOPMENT
SPONSOR DEPARTMENT

CITY ENGINEER — DATE
DIRECTOR OF PUBLIC WORKS AND ENGINEERING — DATE

SUBMITTED:
SCALE: NONE
DATE: 02/22/99
SURVEY BY: N/A
F B NO:

DESIGNED BY: MCD
DRAWN BY: PCB
DWG. NO. : E-27
SHT NO 159 of 159 SHTS
CITY DWG NO: 35001

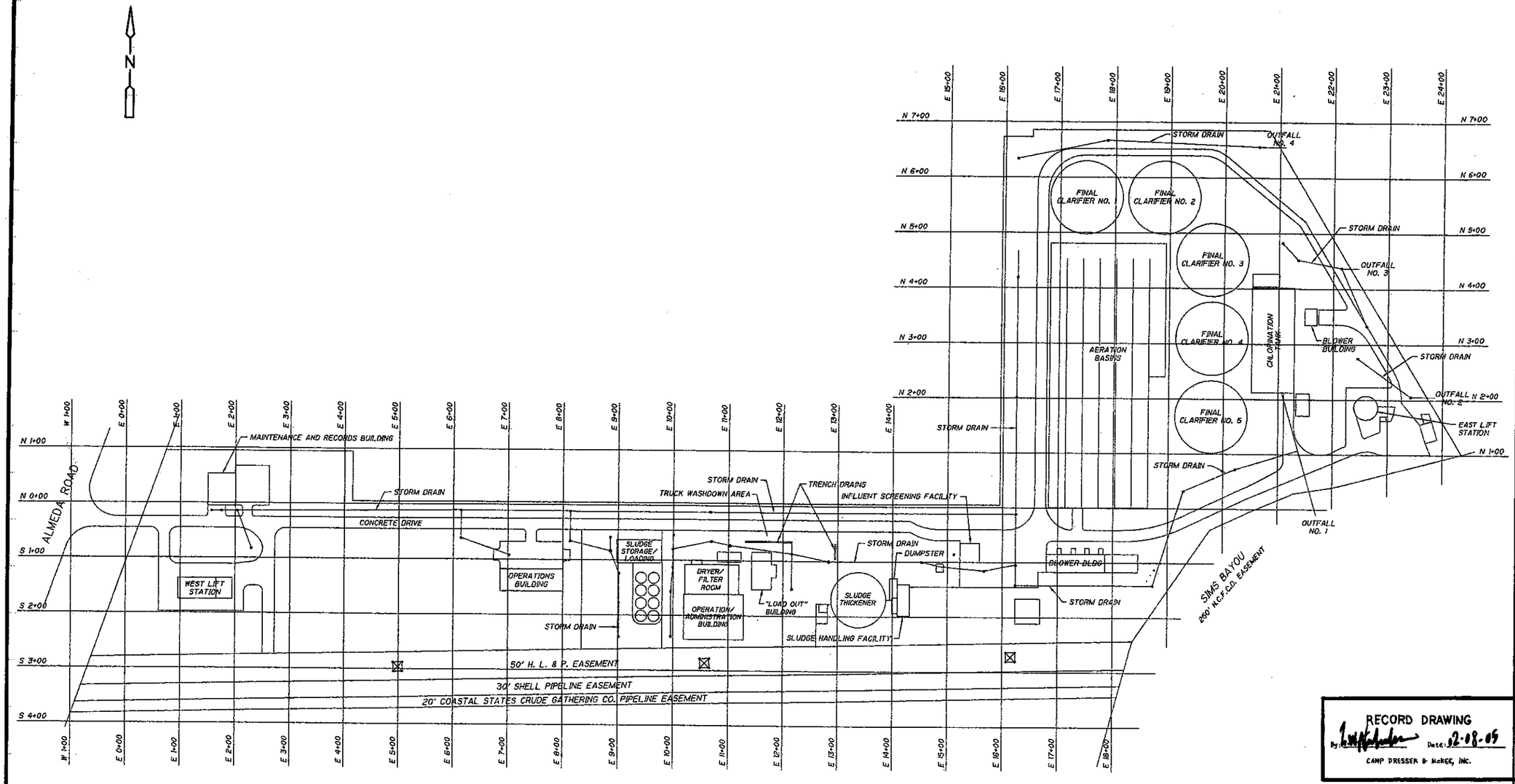

RECORD DRAWING
By _____ Date: 2-28-05
CAMP DRESSER & McKEE, INC.

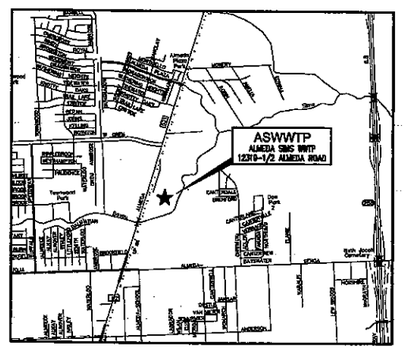

VICINITY MAP

REV. NO.	DESCRIPTION	APP'D	DATE
1	RECORD DRAWING	SRR	01/27/05

SEAL
3-18-02
STATE OF TEXAS
B.W. NICHOLAS
83349
LICENSED
PROFESSIONAL ENGINEER

SEAL

CDM Camp Dresser & McKee Inc.
consulting engineering construction operations

ALMEDA SIMS
EXISTING SITE PLAN

PROJECT NO.
R-0265-20-3
FILE No. WW 4759-03

TITLE
UPPER BRAYS, ALMEDA SIMS AND WCID NO. 111 WASTEWATER TREATMENT PLANT IMPROVEMENTS

CITY OF HOUSTON
DEPARTMENT OF PUBLIC WORKS AND ENGINEERING

PRIVATELY FUNDED PUBLIC WORKS	CITY FUNDED PUBLIC WORKS
	PROJECT MANAGER 3-18-02
	CONSTRUCTION 3-19-02
	CHIEF ENGINEER 3/19/02

OTHER APPROVAL

TRAFFIC AND TRANSPORTATION	SPONSOR DEPARTMENT
CITY ENGINEER DATE 3-26-2002	
DIRECTOR OF PUBLIC WORKS AND ENGINEERING DATE 3/26/02	

SUBMITTED: CDM
SCALE: 1"=100'
DATE: MARCH 2002
SURVEY BY: RBI
F B NO: P-5044

DESIGNED BY: BWN
DRAWN BY: PLB
CDM DWG NO: C-A-1
SHEET NO 19 OF 173 SHEETS

CITY DWG NO:
87631

I:\8135\26634\PACKAGES\30P\CIVIL\CSTPLC02.DWG

N

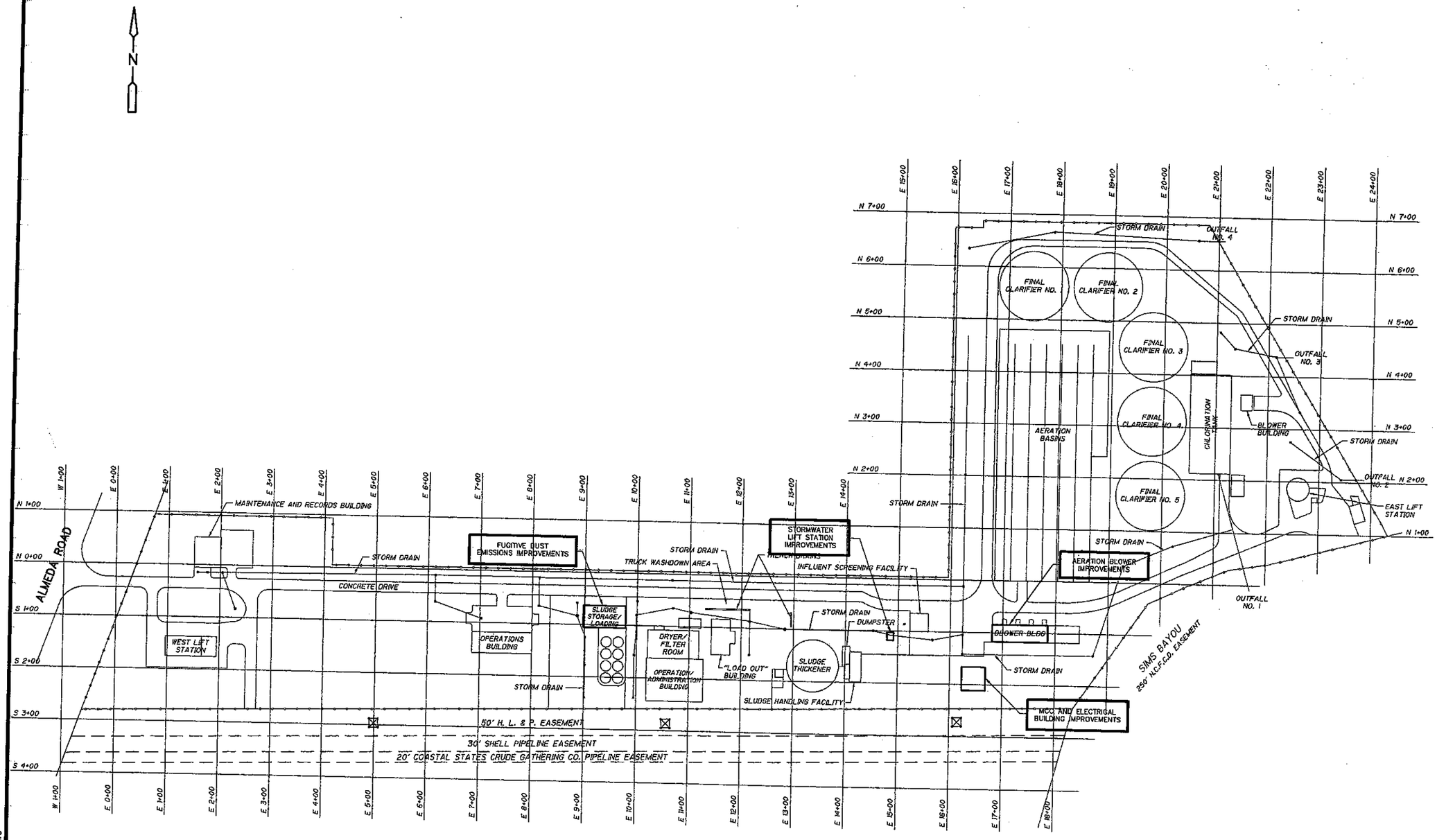

I:\8138\28634\PACKAGE3\30P\CIVIL\CSTPLC02.DWG

RECORD DRAWING
By: B.W. Nicholas Date: 02-08-05
CAMP DRESSER & McKEE, INC.

REV. NO.	DESCRIPTION	APP'D	DATE
1	RECORD DRAWING	SRR	01/27/05

SEAL
B.W. NICHOLAS 83349 LICENSED PROFESSIONAL ENGINEER
STATE OF TEXAS
2-18-02

SEAL

CDM Camp Dresser & McKee Inc.
consulting engineering construction operations

ALMEDA SIMS PROPOSED SITE PLAN

PROJECT NO. R-0265-20-3
FILE No. WW 4759-03

TITLE
UPPER BRAYS, ALMEDA SIMS AND WCID NO. 111 WASTEWATER TREATMENT PLANT IMPROVEMENTS

CITY OF HOUSTON
DEPARTMENT OF PUBLIC WORKS AND ENGINEERING

PRIVATELY FUNDED PUBLIC WORKS	CITY FUNDED PUBLIC WORKS
	PROJECT MANAGER 3-15-02
	CONSTRUCTION 3-19-02
	CHIEF ENGINEER 3/19/02

OTHER APPROVAL

TRAFFIC AND TRANSPORTATION	SPONSOR DEPARTMENT
CITY ENGINEER 3-20-2002 DATE	DIRECTOR OF PUBLIC WORKS AND ENGINEERING 3/26/02 DATE

SUBMITTED: CDM
SCALE: 1"=100'
DATE: MARCH 2002
SURVEY BY: RBI
F B NO: P-5044

DESIGNED BY:
DRAWN BY: PLB
CDM DWG NO: C-A-2
SHEET NO 15 OF 173 SHEETS

CITY DWG NO: 37631

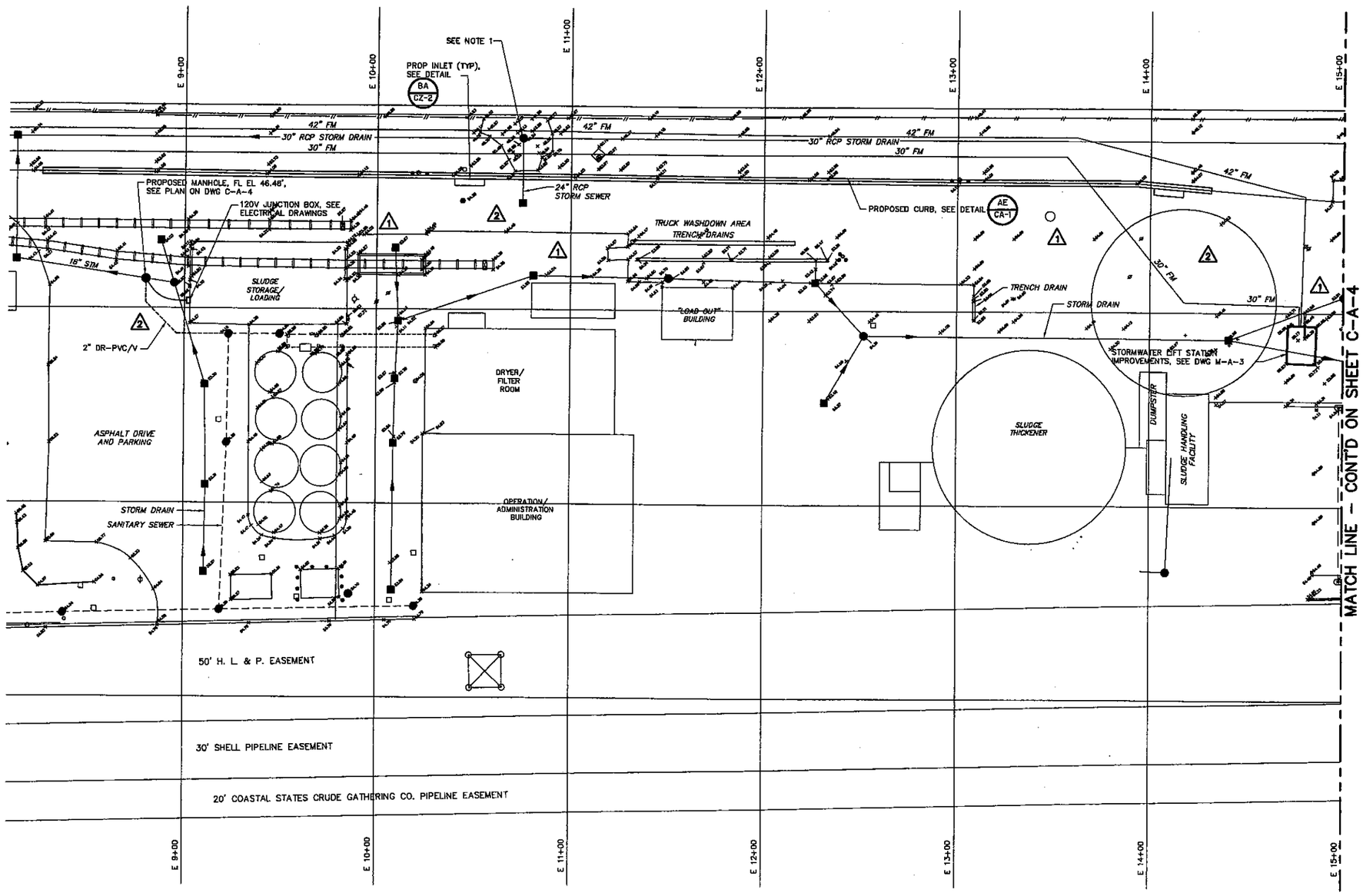

NOTES:

1. CONTRACTOR TO REPAIR THIS EXISTING STORM DRAIN. INSTALL DEPEND-O-LOK SS STORM SEWER REPAIR COUPLINGS ON PIPE INTERIOR. REGROUT ALL PIPE AND MANHOLE JOINTS WITH HIGH STRENGTH EPOXY GROUT. BACKFILL EXPOSED PIPING WITH CEMENT STABILIZED SAND.

2. ALL COORDINATES SHOWN HERON ARE GRID. ALL DIMENSIONS ARE SURFACE AND MAY BE CONVERTED TO GRID BY DIVIDING BY A SCALE FACTOR OF 0.999881796.

3. ALL BEARINGS AND COORDINATES SHOWN HERON ARE REFERENCED TO THE TEXAS STATE PLANE COORDINATES SYSTEM, SOUTH CENTRAL ZONE. C.O.H. MONUMENTS 4855-1402 AND 4855-1404 WERE USED FOR A BASIS OF BEARINGS AND ELEVATIONS. PROJECT BENCHMARK IS C.O.H. MONUMENT 4855-1402 WITH A PUBLISHED ELEVATION OF 73.93, 1978 ADJ. 1929 DATUM.

1

REV. NO.	DESCRIPTION	APP'D	DATE
2	RECORD DRAWING	BWN	01/27/05
1	CHANGE ORDER	BWN	11-19-02

SEAL 11-18-02 B.W. NICHOLAS 83349

SEAL

CDM Camp Dresser & McKee Inc.

ALMEDA SIMS
PROPOSED SITE PLAN
SHEET 1

PROJECT NO. R-0265-20-3
FILE No. WW 4758-03

TITLE
UPPER BRAYS, ALMEDA SIMS AND WCID NO. 111 WASTEWATER TREATMENT PLANT IMPROVEMENTS

CITY OF HOUSTON
DEPARTMENT OF PUBLIC WORKS AND ENGINEERING

PRIVATELY FUNDED PUBLIC WORKS	CITY FUNDED PUBLIC WORKS
	PROJECT MANAGER 3/20/02
	CONSTRUCTION 3/19/02
	CHIEF ENGINEER 3/20/02

OTHER APPROVAL

TRAFFIC AND TRANSPORTATION	SPONSOR DEPARTMENT
CITY ENGINEER DATE 3-20-2002	
	DIRECTOR OF PUBLIC WORKS AND ENGINEERING DATE 3/20/02

SUBMITTED: CDM
SCALE: 1"=30'
DATE: MARCH 2002
SURVEY BY: RBI
F B NO: P-5044

DESIGNED BY: EM
DRAWN BY: TRG/PLB
CDM DWG NO: C-A-3
SHEET NO 16 OF 173 SHEETS
CITY DWG NO: 37691

RECORD DRAWING
By: Date: 1.08.05
CAMP DRESSER & McKEE, INC.

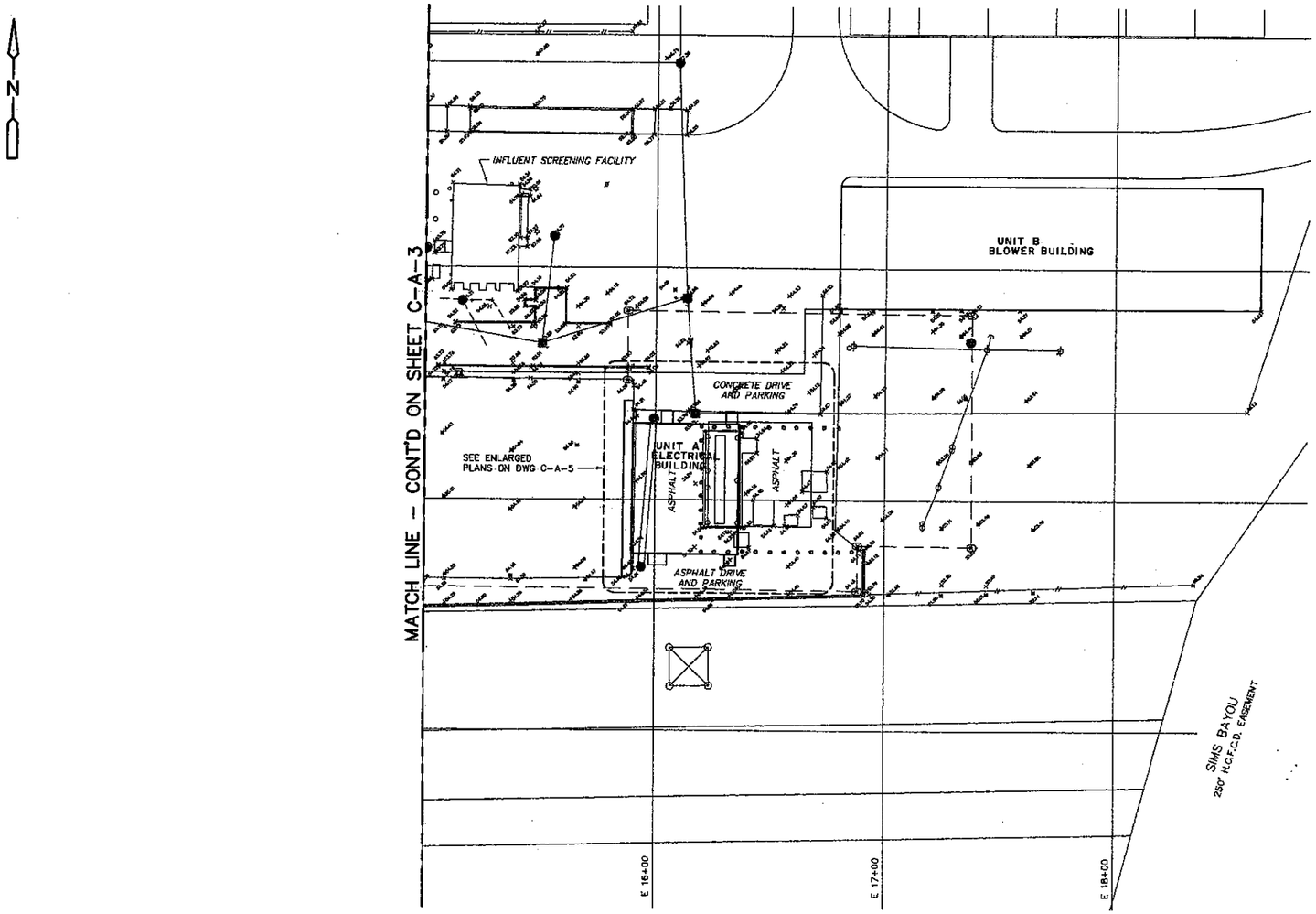

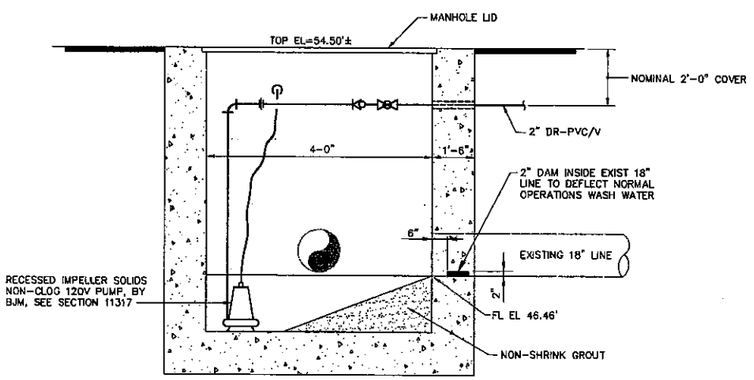

SECTION 1
NTS

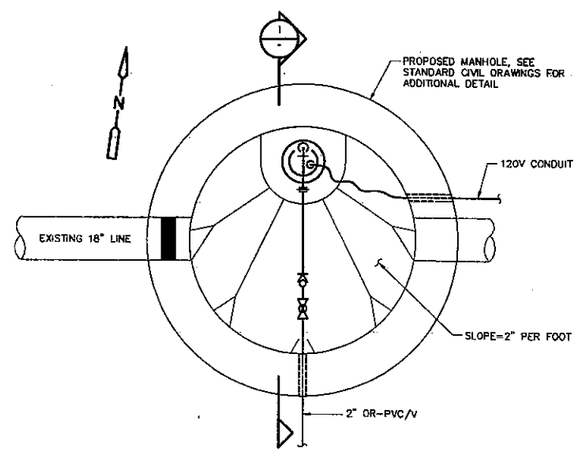

AT ELEVATION 54.0'
MANHOLE PLAN
NTS

NOTES:

1. ALL COORDINATES SHOWN HERON ARE GRID. ALL DIMENSIONS ARE SURFACE AND MAY BE CONVERTED TO GRID BY DIVIDING BY A SCALE FACTOR OF 0.999881796.

2. ALL BEARINGS AND COORDINATES SHOWN HERON ARE REFERENCED TO THE TEXAS STATE PLANE COORDINATES SYSTEM, SOUTH CENTRAL ZONE. C.O.H. MONUMENTS 4855-1402 AND 4855-1404 WERE USED FOR A MONUMENT 4855-1402 WITH A PUBLISHED ELEVATION OF 73.93, 1978 ADJ. 1929 DATUM.

REV. NO.	DESCRIPTION	APP'D	DATE
1	RECORD DRAWING	SRR	01/27/05

SEAL
3-18-02
STATE OF TEXAS
B.W. NICHOLAS
83349
LICENSED
PROFESSIONAL ENGINEER

SEAL

CDM Camp Dresser & McKee Inc.
consulting engineering construction operations

ALMEDA SIMS
PROPOSED SITE PLAN
SHEET II

PROJECT NO. R-0265-20-3
FILE No. WW 4759-03

TITLE
UPPER BRAYS, ALMEDA SIMS AND WCID NO. 111 WASTEWATER TREATMENT PLANT IMPROVEMENTS

CITY OF HOUSTON
DEPARTMENT OF PUBLIC WORKS AND ENGINEERING

PRIVATELY FUNDED PUBLIC WORKS	CITY FUNDED PUBLIC WORKS
	PROJECT MANAGER 3-18-02
	CONSTRUCTION 3-19-02
	CHIEF ENGINEER 3/19/02

OTHER APPROVAL

TRAFFIC AND TRANSPORTATION	SPONSOR DEPARTMENT
CITY ENGINEER 3-20-2002 DATE	
DIRECTOR OF PUBLIC WORKS AND ENGINEERING 3/26/02 DATE	

RECORD DRAWING
By: [signature] Date: 02-08-05
CAMP PRESSER & McKEE, INC.

SUBMITTED: CDM
SCALE: 1"=100'
DATE: MARCH 2002
SURVEY BY: RBI
F B NO: P-5044

DESIGNED BY: BWN
DRAWN BY: SB/PLB
CDM DWG NO: C-A-4
SHEET NO 17 OF 173 SHEETS

CITY DWG NO: 97631

I:\6138\28634\PACKAGES\30PI\CIVIL\CSTPLC02A.DWG

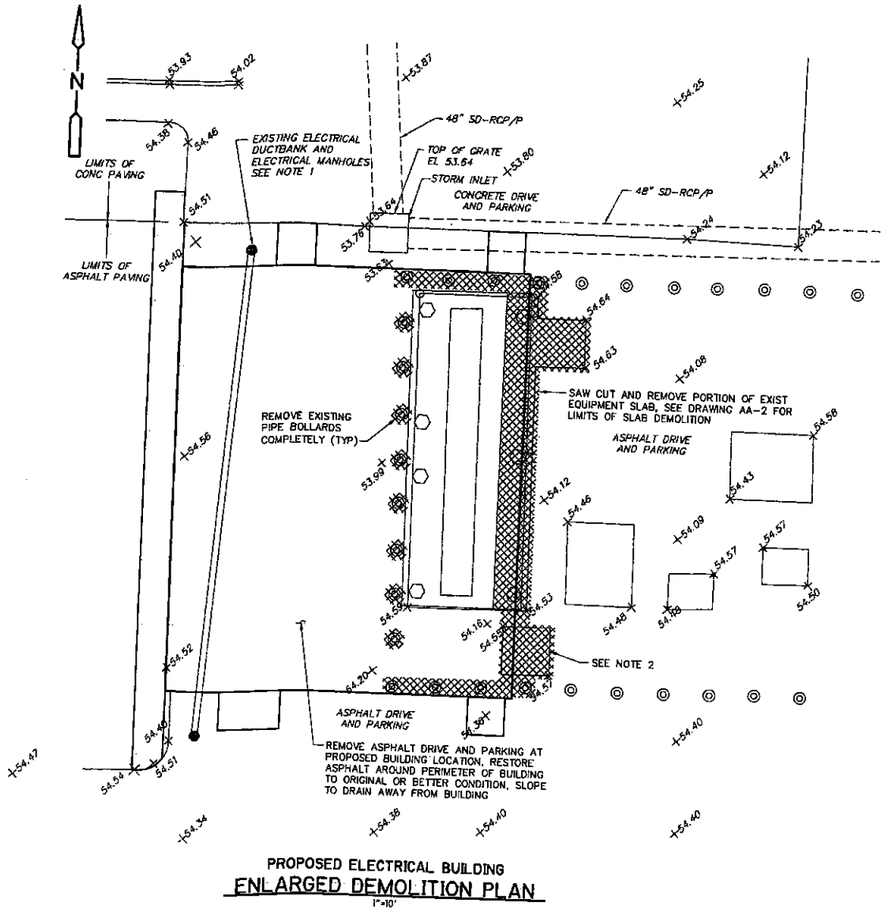

PROPOSED ELECTRICAL BUILDING
ENLARGED DEMOLITION PLAN
1"=10'

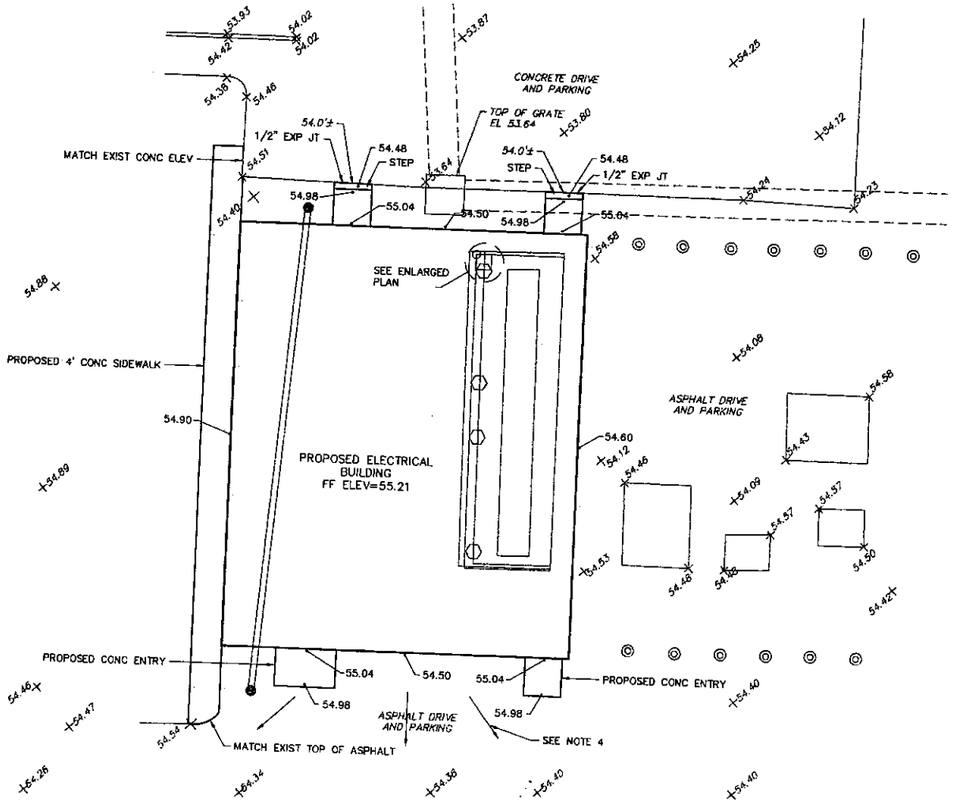

PROPDSED ELECTRICAL BUILDING
ENLARGED SITE PLAN
1"=10'

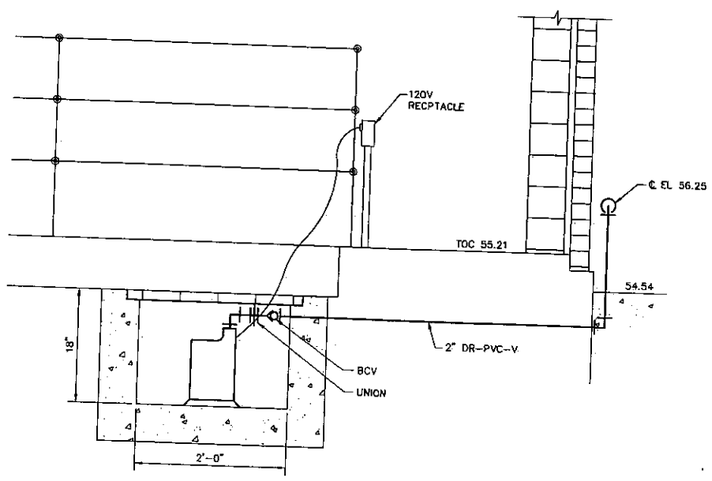

SECTION
SCALE: NTS

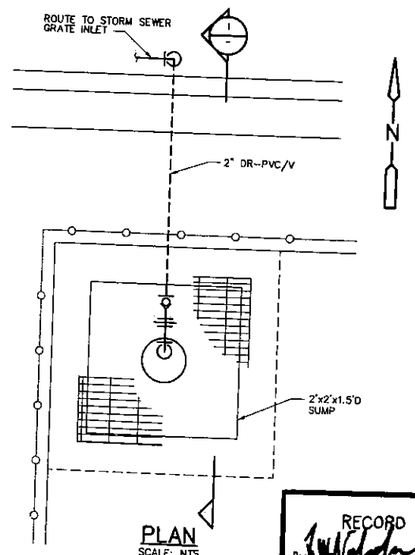

PLAN
SCALE: NTS

NOTES (CONT)

7. ALL COORDINATES SHOWN HERON ARE GRID. ALL DIMENSIONS ARE SURFACE AND MAY BE CONVERTED TO GRID BY DIVIDING BY A SCALE FACTOR OF 0.999881796.

8. ALL BEARINGS AND COORDINATES SHOWN HERON ARE REFERENCED TO THE TEXAS STATE PLANE COORDINATES SYSTEM, SOUTH CENTRAL ZONE C.O.H. MONUMENTS 4855-1402 AND 4855-1404 WERE USED FOR A MONUMENT 4855-1402 WITH A PUBLISHED ELEVATION OF 73.93, 1978 ADJ. 1929 DATUM.

NOTES:

1. BUILDING IS TO BE CONSTRUCTED OVER THE EXISTING ELECTRICAL DUCT BANK. SEE STRUCTURAL DRAWINGS FOR SPECIAL BUILDING FOUNDATION TREATMENTS.

2. EXISTING ELECTRICAL CAPACITORS ARE TO BE RELOCATED AS SHOWN ON THE ELECTRICAL DRAWINGS. DEMOLISH EXISTING CONCRETE SUPPORT PAD AND CONDUITS. RE-ADJUST LOCATION OF PROPOSED WEST SIDE CONCRETE SIDEWALK AS REQUIRED TO CLEAR NEW CAPACITOR PADS.

3. FINISH FLOOR OF BUILDING HAS BEEN SET 1 FOOT ABOVE THE NEAREST SANITARY SEWER MANHOLE RIM.

4. PROVIDE NEW ASPHALT PAVING TO SLOPE DRAINAGE AWAY FROM BUILDING.

5. SEE ARCHITECTURAL DRAWINGS FOR ROOF GUTTER AND DOWNSPOUT LOCATION.

6. ALL EXISTING UNDERGROUND UTILITIES ARE NOT GUARANTEED OR BE COMPLETE OR DEFINITE, BUT WHERE OBTAINED FROM THE BEST INFORMATION AVAILABLE. CONTRACTOR HAS SOLE RESPONSIBILITY FOR FIELD VERIFICATION OF ALL EXISTING FACILITIES SHOWN. THE CONTRACTOR SHALL COORDINATE ALL CONFLICTS WITH THE ON-SITE RPR AND THE CITY'S CONSTRUCTION MANAGER REPRESENTATIVE.

REV. NO.	DESCRIPTION	APP'D	DATE
1	RECORD DRAWING	SRR	01/27/05

SEAL
STATE OF TEXAS
B.W. NICHOLAS
83349
LICENSED
PROFESSIONAL ENGINEER
03-18-02

SEAL

RECORD DRAWING
By: [signature] Date: 01-18-05
CAMP DRESSER & McKEE, INC.

CDM Camp Dresser & McKee Inc.
consulting engineering construction operations

ALMEDA SIMS
PROPOSED SITE PLAN
SHEET III

PROJECT NO. R-0265-20-3
FILE No. WW 4759-03

TITLE
UPPER BRAYS, ALMEDA SIMS AND WCID NO. 111 WASTEWATER TREATMENT PLANT IMPROVEMENTS

CITY OF HOUSTON
DEPARTMENT OF PUBLIC WORKS AND ENGINEERING

PRIVATELY FUNDED PUBLIC WORKS	CITY FUNDED PUBLIC WORKS
	PROJECT MANAGER 3-19-02
	CONSTRUCTION 3-19-02
	CHIEF ENGINEER 3/19/02

OTHER APPROVAL

TRAFFIC AND TRANSPORTATION	SPONSOR DEPARTMENT
CITY ENGINEER 3-20-2002 DATE	
DIRECTOR OF PUBLIC WORKS AND ENGINEERING 3/26/02 DATE	

SUBMITTED: CDM
SCALE: 1"=100'
DATE: MARCH 2002
SURVEY BY: RBI
F B NO: P-5044

DESIGNED BY: BWN
DRAWN BY: SB/PLB
CDM DWG NO: C-A-5
SHEET NO 18 OF 173 SHEETS
CITY DWG NO: 87631

I:\8135\2863A\PACKAGE3\30P\CIVIL\CSTPLC02A.DWG

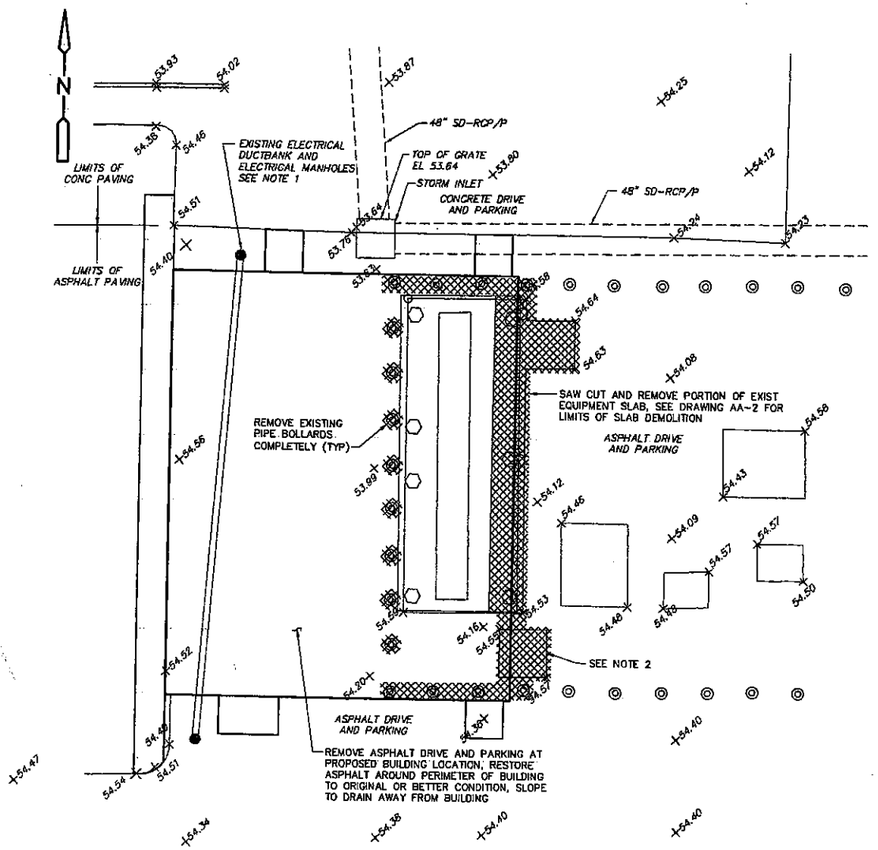

PROPOSED ELECTRICAL BUILDING
ENLARGED DEMOLITION PLAN
1"=10'

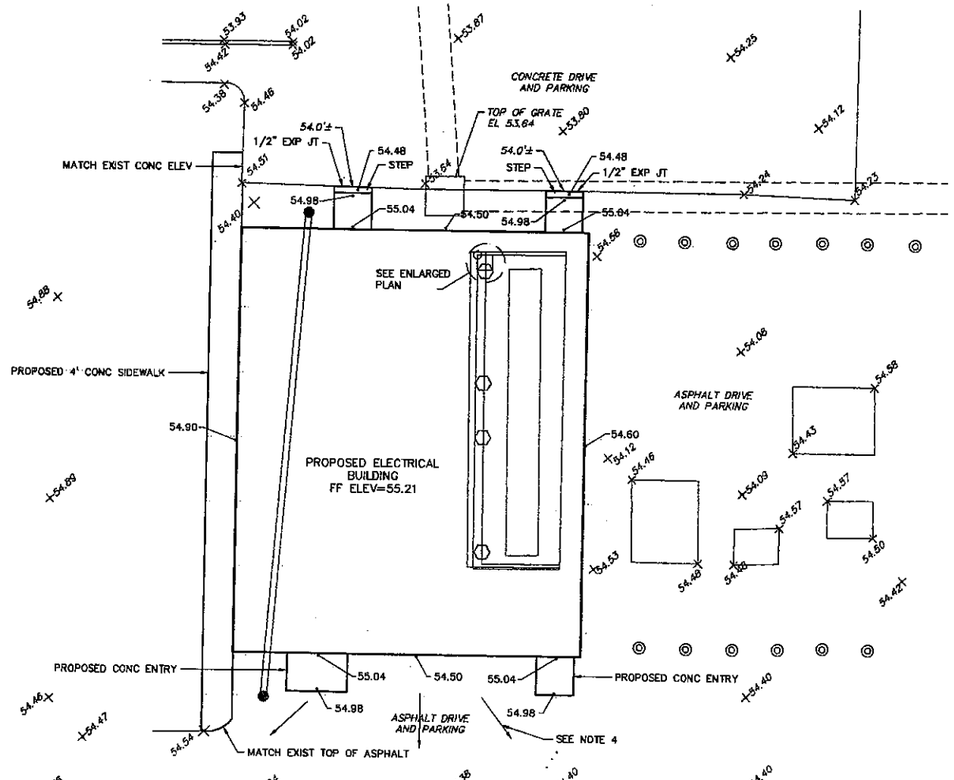

PROPOSED ELECTRICAL BUILDING
ENLARGED SITE PLAN
1"=10'

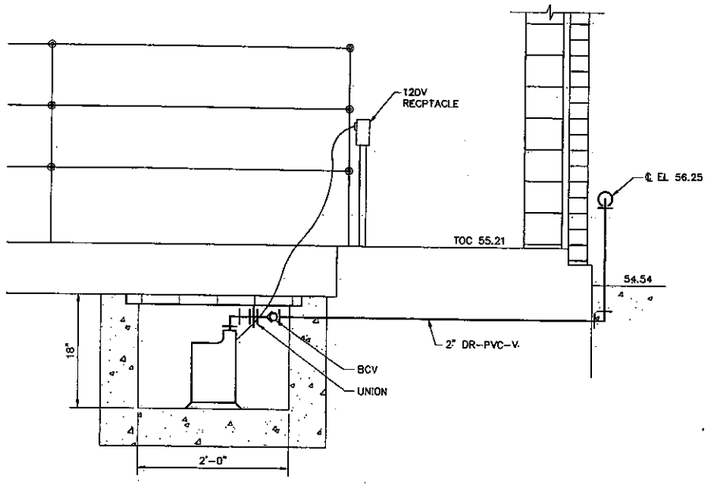

SECTION
SCALE: NTS

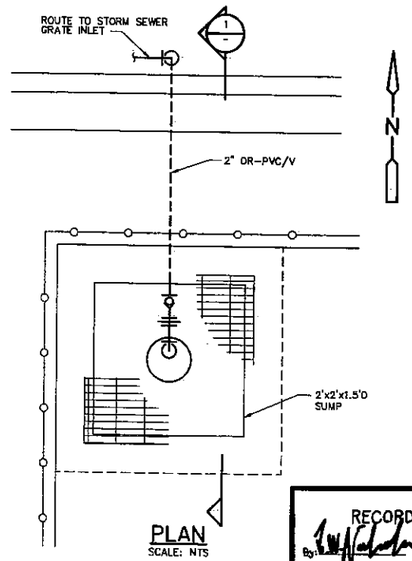

PLAN
SCALE: NTS

NOTES (CONT)

7. ALL COORDINATES SHOWN HERON ARE GRID. ALL DIMENSIONS ARE SURFACE AND MAY BE CONVERTED TO GRID BY DIVIDING BY A SCALE FACTOR OF 0.999881796.

8. ALL BEARINGS AND COORDINATES SHOWN HERON ARE REFERENCED TO THE TEXAS STATE PLANE COORDINATES SYSTEM, SOUTH CENTRAL ZONE C.O.H. MONUMENTS 4855-1402 AND 4855-1404 WERE USED FOR A MONUMENT 4855-1402 WITH A PUBLISHED ELEVATION OF 73.93, 1976 ADJ. 1929 DATUM.

NOTES:

1. BUILDING IS TO BE CONSTRUCTED OVER THE EXISTING ELECTRICAL DUCT BANK. SEE STRUCTURAL DRAWINGS FOR SPECIAL BUILDING FOUNDATION TREATMENTS.

2. EXISTING ELECTRICAL CAPACITORS ARE TO BE RELOCATED AS SHOWN ON THE ELECTRICAL DRAWINGS. DEMOLISH EXISTING CONCRETE SUPPORT PAD AND CONDUITS. RE-ADJUST LOCATION OF PROPOSED WEST SIDE CONCRETE SIDEWALK AS REQUIRED TO CLEAR NEW CAPACITOR PADS.

3. FINISH FLOOR OF BUILDING HAS BEEN SET 1 FOOT ABOVE THE NEAREST SANITARY SEWER MANHOLE RIM.

4. PROVIDE NEW ASPHALT PAVING TO SLOPE DRAINAGE AWAY FROM BUILDING.

5. SEE ARCHITECTURAL DRAWINGS FOR ROOF GUTTER AND DOWNSPOUT LOCATION.

6. ALL EXISTING UNDERGROUND UTILITIES ARE NOT GUARANTEED OR BE COMPLETE OR DEFINITE, BUT WHERE OBTAINED FROM THE BEST INFORMATION AVAILABLE. CONTRACTOR HAS SOLE RESPONSIBILITY FOR FIELD VERIFICATION OF ALL EXISTING FACILITIES SHOWN. THE CONTRACTOR SHALL COORDINATE ALL CONFLICTS WITH THE ON-SITE RPR AND THE CITY'S CONSTRUCTION MANAGER REPRESENTATIVE.

REV. NO.	DESCRIPTION	APP'D	DATE
1	RECORD DRAWING	SRR	01/27/05

SEAL

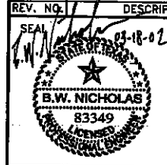

SEAL

CDM Camp Dresser & McKee Inc.
consulting engineering construction operations

ALMEDA SIMS
PROPOSED SITE PLAN
SHEET III

PROJECT NO. R-0265-20-3
FILE No. WW 4759-03

TITLE
UPPER BRAYS, ALMEDA SIMS AND WCID NO. 111 WASTEWATER TREATMENT PLANT IMPROVEMENTS

CITY OF HOUSTON
DEPARTMENT OF PUBLIC WORKS AND ENGINEERING

PRIVATELY FUNDED PUBLIC WORKS	CITY FUNDED PUBLIC WORKS
	PROJECT MANAGER 3-20-02
	CONSTRUCTION 3-19-02
	CHIEF ENGINEER 3/19/02

OTHER APPROVAL

TRAFFIC AND TRANSPORTATION	SPONSOR DEPARTMENT
CITY ENGINEER 3-20-2002 DATE	
DIRECTOR OF PUBLIC WORKS AND ENGINEERING 3/20/02 DATE	

RECORD DRAWING
By: [signature] Date: 11-18-05
CAMP DRESSER & McKEE, INC.

SUBMITTED: CDM	DESIGNED BY: BWN
SCALE: 1"=100'	DRAWN BY: SB/PLB
DATE: MARCH 2002	CDM DWG NO: C-A-5
SURVEY BY: RBI	SHEET NO 18 OF 173 SHEETS
F B NO: P-5044	CITY DWG NO: 87631

I:\81381\28634\PACKAGE3A_30IP\CIVIL\CSTPLC02A.DWG

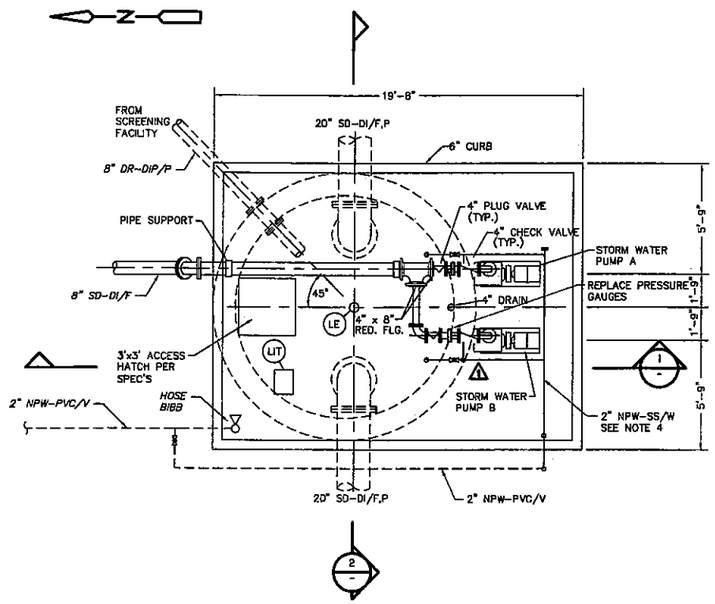

PUMP STATION
PLAN
1/4"=1'-0"

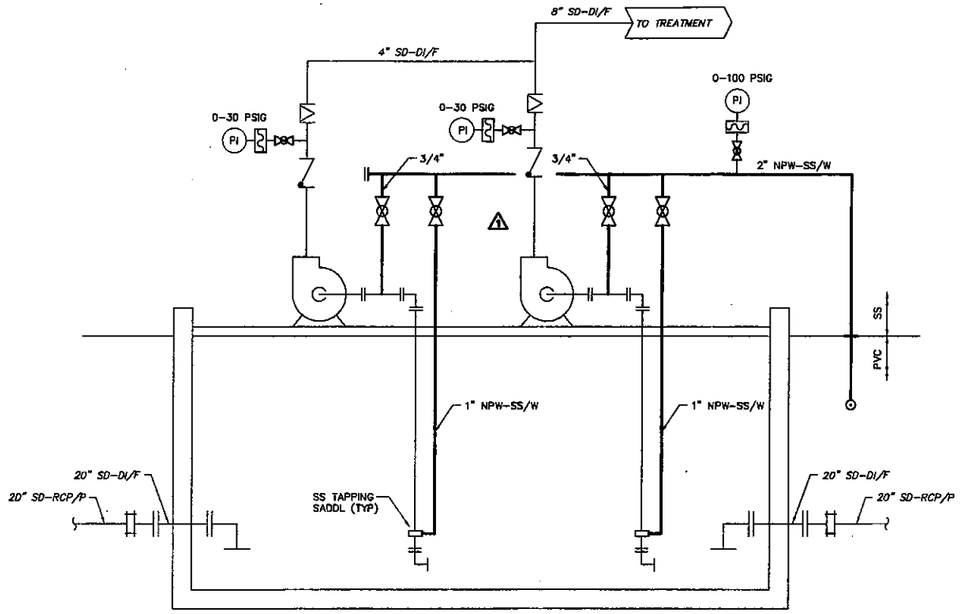

PUMP STATION PROCESS DIAGRAM

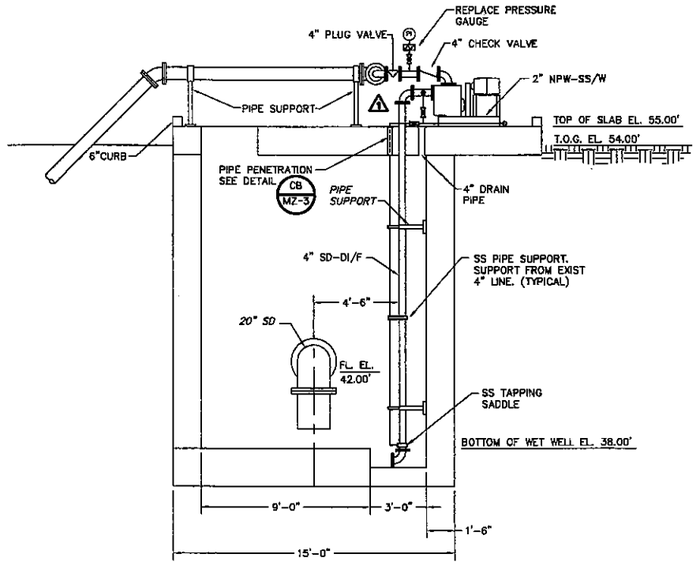

SECTION 1
1/4"=1'-0"

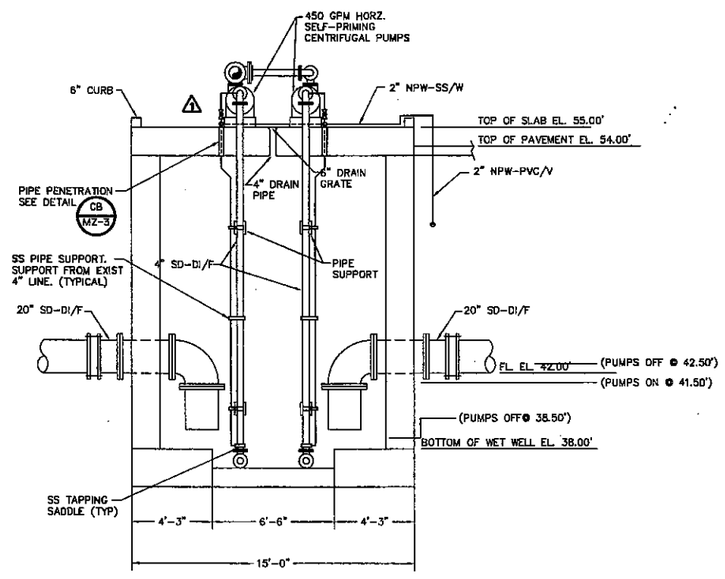

SECTION 2
1/4"=1'-0"

NOTES:

1. WET WELL OF EXISTING STORM DRAINAGE PUMP STATION IS TO BE COMPLETELY CLEANED AT THE START OF THE PROJECT AND AT THE END OF THE PROJECT. THE CONTRACTOR SHALL ASSUME A UNIFORM 5 FEET OF DEBRIS CONSISTING OF SAND AND GRIT AT THE BOTTOM OF THE WET WELL. AT THE END OF THE PROJECT, ASSUME A UNIFORM DEPTH OF DEBRIS OF 2 FEET. DISPOSE OF ALL MATERIALS PER WASTE MATERIAL DISPOSAL SPECIFICATION.

2. EXISTING PUMP SUCTION PIPING IS TO BE COMPLETELY DISASSEMBLED, CLEANED, AND REASSEMBLED WITH NEW GASKETS. CONTRACTOR TO VACUUM TEST ASSEMBLED PIPING.

3. TRANSITION NPW-PVC PIPING TO NPW-SS ONCE ABOVE GROUND.

4. SUPPORT PROPOSED NPW PIPING WITH SS UNI-STRUT, SEE STANDARD MECHANICAL DETAILS FOR ADDITIONAL DETAIL.

5. MAKE PRIMING CONNECTION AT LOCATION AS RECOMMENDED BY GORMAN RUPP PUMP CO. EXISTING MILTRONICS [redacted] CONTROLLER TO BE REPROGRAMMED FOR LEVEL SETTINGS AS SHOWN.

REV. NO.	DESCRIPTION	APP'D	DATE
1	RECORD DRAWING	BWN	01/27/05

SEAL

B.W. NICHOLAS
83349
LICENSED PROFESSIONAL ENGINEER
3-18-02

SEAL

CDM Camp Dresser & McKee Inc.
consulting engineering construction operations

ALMEDA SIMS
STORMWATER PUMP STATION
MODIFICATIONS
PLAN, SECTION AND DETAILS

PROJECT NO: R-0265-20-3
FILE No. WW 4759-03

TITLE
UPPER BRAYS, ALMEDA SIMS AND WCID NO. 111 WASTEWATER TREATMENT PLANT IMPROVEMENTS

CITY OF HOUSTON
DEPARTMENT OF PUBLIC WORKS AND ENGINEERING

PRIVATELY FUNDED PUBLIC WORKS	CITY FUNDED PUBLIC WORKS
	PROJECT MANAGER
	CONSTRUCTION 3-28-02
	CHIEF ENGINEER 3/4/02

OTHER APPROVAL

TRAFFIC AND TRANSPORTATION	SPONSOR DEPARTMENT
CITY ENGINEER	3-20-2002 DATE
DIRECTOR OF PUBLIC WORKS AND ENGINEERING	3/26/02 DATE

RECORD DRAWING
By: B.W. Nicholas Date: 12-08-05
CAMP DRESSER & McKEE, INC.

SUBMITTED: CDM
SCALE: AS NOTED
DATE: MARCH 2002
SURVEY BY: RBI
F B NO: P-5044

DESIGNED BY: E. MCCALL
DRAWN BY: T. GENTRY
CDM DWG NO: M-A-3
SHEET NO 56 OF 73 SHEETS

CITY DWG NO: 37631-

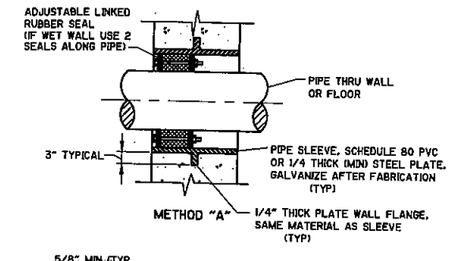

NOTE

THESE SLEEVED PIPE DETAILS ARE TO BE USED IN DRY WALLS ONLY, EXCEPT AS NOTED.

WALL PENETRATION IN NEW WALL

DETAIL CA
NTS

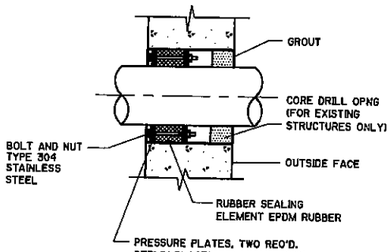

NOTES

1 INSIDE DIA OF EACH WALL OPENING SHALL BE OF THE SIZE RECOMMENDED BY MANUFACTURER TO FIT THE PIPE OR CONDUIT & THE WALL SEAL ASSEMBLY TO ENSURE A WATER-TIGHT JOINT.

2 PIPE TO WALL PENETRATION CLOSURES SHALL BE OF THE MODULAR MECHANICAL TYPE, CONSISTING OF INTERLOCKING SYNTHETIC RUBBER LINKS SHAPED TO FILL THE ANNULAR SPACE BETWEEN THE PIPE AND WALL OPENING. A PRESSURE PLATE SHALL BE PROVIDED UNDER EACH BOLT HEAD AND NUT, WITH THE SEAL CONSTRUCTED TO PROVIDE ELECTRICAL INSULATION BETWEEN WALL AND PIPE.

3 WALL SEAL ASSEMBLY SHALL BE LINK SEAL AS MFGR BY THUNDERLINE CORP WAYNE MICHIGAN OR EQUAL.

4 PROVIDE ESCUTCHEONS IN FINISHED SPACES.

WALL PENETRATION IN EXISTING WALL

DETAIL CB
NTS

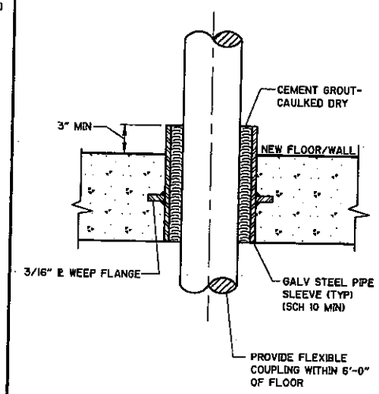

PIPE SLEEVE (WET FLOOR)

DETAIL CC
NTS

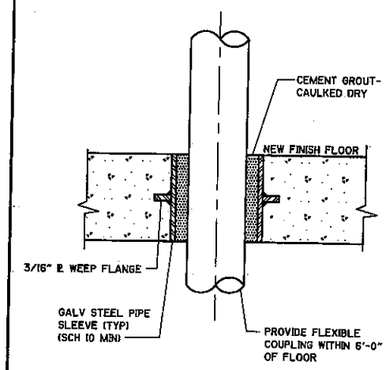

PIPE SLEEVE W/GROUT INTERMEDIATE FLOOR PENTETRATION

DETAIL CD
NTS

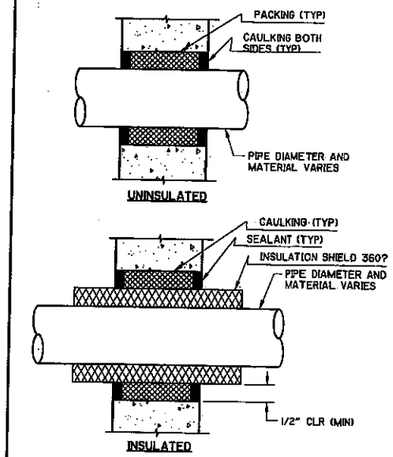

CAULKED WALL FOR CONCRETE, CMU, BRICK OR CAVITY WALLS

DETAIL CE
NTS

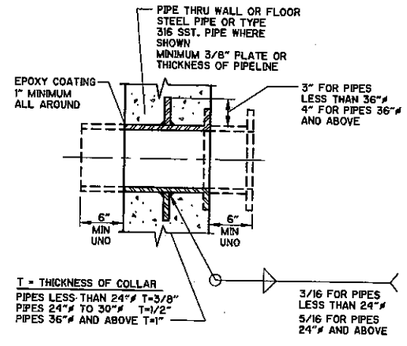

STEEL FLANGE X PLAIN END WALL PIPE

DETAIL CF
NTS

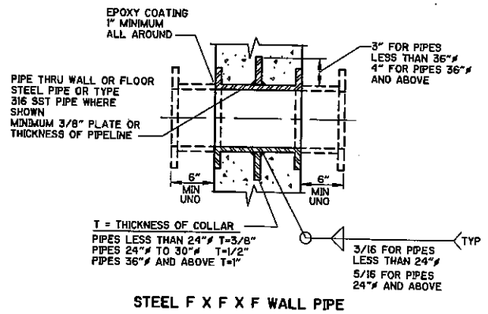

STEEL F X F X F WALL PIPE

DETAIL CG
NTS

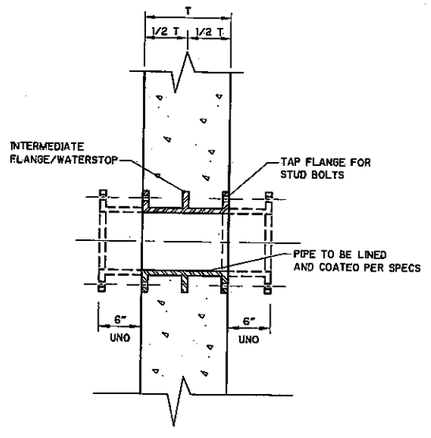

DI FxFxF WALL PIPE IN NEW WALL

DETAIL CK
NTS

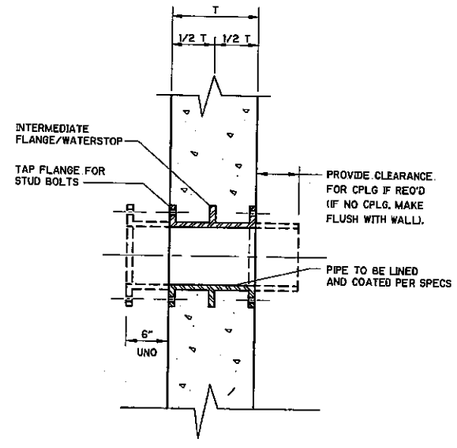

DI FxFxPE WALL PIPE IN NEW WALL

DETAIL CL
NTS

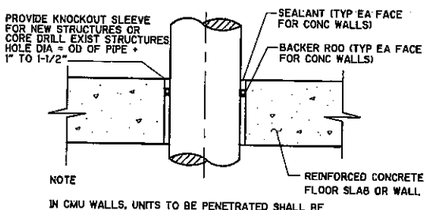

IN CMU WALLS, UNITS TO BE PENETRATED SHALL BE MORTAR-FILLED TO MIN 12" AROUND PIPE PENETRATION.

FLOOR OR WALL PENETRATION

DETAIL CH
NTS

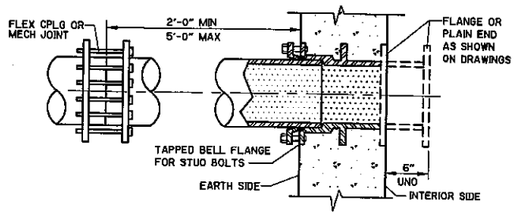

DI MJ WALL PIPE IN NEW WALL

DETAIL CJ
NTS

REV. NO.	DESCRIPTION	APP'D	DATE
1	RECORD DRAWING	SRR	01/27/05

SEAL

B.W. NICHOLAS 83349 LICENSED PROFESSIONAL ENGINEER STATE OF TEXAS 03-18-02

CDM Camp Dresser & McKee Inc.
consulting engineering construction operations

STANDARD MECHANICAL DETAILS III

PROJECT NO. R-0265-20-3
FILE No. WW 4759-03

TITLE
UPPER BRAYS, ALMEDA SIMS AND WCID NO. 111 WASTEWATER TREATMENT PLANT IMPROVEMENTS

CITY OF HOUSTON
DEPARTMENT OF PUBLIC WORKS AND ENGINEERING

PRIVATELY FUNDED PUBLIC WORKS	CITY FUNDED PUBLIC WORKS
	PROJECT MANAGER 3/18/02
	CONSTRUCTION 3-19-02
	CHIEF ENGINEER 3/19/02

OTHER APPROVAL

TRAFFIC AND TRANSPORTATION	SPONSOR DEPARTMENT
CITY ENGINEER	DATE 3-20-2002
DIRECTOR OF PUBLIC WORKS AND ENGINEERING	DATE 3/20/02

RECORD DRAWING
By: [signature] Date: 02-18-05
CAMP DRESSER & MCKEE, INC.

SUBMITTED: CDM
SCALE: AS NOTED
DATE: MARCH 2002
SURVEY BY: RBI
F B NO: P-5044

DESIGNED BY: B. NICHOLAS
DRAWN BY: P. BULOT
CDM DWG NO: MZ-3
SHEET NO 77 OF 178 SHEETS
CITY DWG NO: 97631

I:\8138\2863A\PACKAGE3\30P\MECH\DETAILS.DWG

CITY OF HOUSTON

DEPARTMENT OF PUBLIC WORKS AND ENGINEERING
ENGINEERING AND CONSTRUCTION DIVISION

ALMEDA SIMS WASTEWATER TREATMENT PLANT AND SLUDGE PROCESSING FACILITY IMPROVEMENTS PACKAGE I

WBS NO. R-000298-0004-4

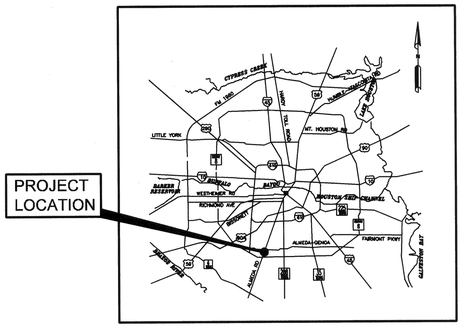

LOCATION MAP

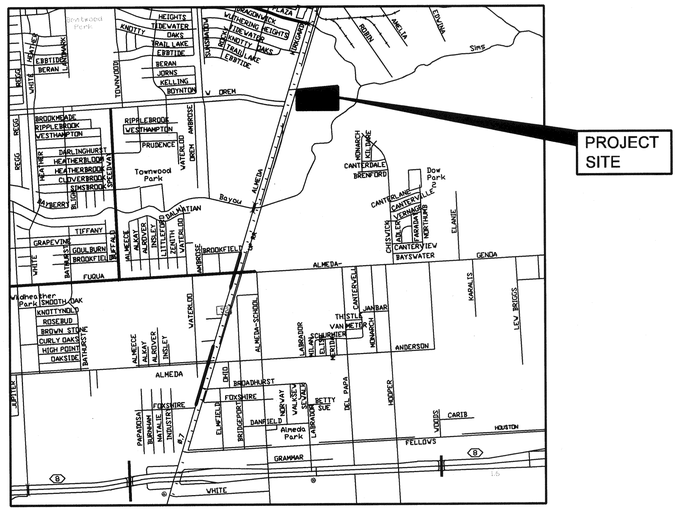

VICINITY MAP

KEY MAP # 572

GIMS MAP #5352C & 5351A

CONSTRUCTION MANAGER

NAT IYER, CITY OF HOUSTON

CONTRACTOR INFORMATION

INDUSTRIAL TX CORP
11322 WINDFERN ROAD
HOUSTON, TEXAS 77064
PHONE: 281-890-0152
FAX: 281-890-2801
PHONE: 713-254-1691
PROJ. MGR.: MICHAEL HAYNES

RECORD DRAWINGS

THESE RECORD DRAWINGS HAVE BEEN PREPARED USING INFORMATION PROVIDED BY THE CONSTRUCTION CONTRACTOR, SUPPLIERS, AND OTHERS. THE SEAL AND SIGNATURE BELOW ONLY SIGNIFY THAT THE PLANS HAVE BEEN REVISED IN ACCORDANCE WITH THE INFORMATION PROVIDED AND DO NOT GUARANTEE THAT THESE PLANS ACCURATELY SHOW EVERY DETAIL OF THE CONSTRUCTED PROJECT.

STATE OF TEXAS
LI CHUNG CHEN
98576
REGISTERED PROFESSIONAL ENGINEER

JC Chen 11-3-2011
SIGNATURE DATE

MAYOR
BILL WHITE

CONTROLLER
ANNISE D. PARKER

DISTRICT COUNCIL MEMBERS

TONI LAWRENCE DISTRICT A	JARVIS JOHNSON DISTRICT B	ANNIE CLUTTERBUCK DISTRICT C
WANDA ADAMS DISTRICT D	MIKE SULLIVAN DISTRICT E	M.J. KHAN P.E. DISTRICT F
PAM HOLM DISTRICT G	ADRIAN GARCIA DISTRICT H	JAMES G. RODRIGUEZ DISTRICT I

COUNCIL MEMBERS AT–LARGE

PETER BROWN POSITION 1	SUE LOVELL POSITION 2
MELISSA NORIEGA POSITION 3	RONALD C. GREEN POSITION 4

JOLANDA "JO" JONES
POSITION 5

Binkley & Barfield
consulting engineers
1710 Seamist Drive
Houston, Texas 77008-3189
(713) 869-3433

STATE OF TEXAS
LI CHUNG CHEN
98576
REGISTERED PROFESSIONAL ENGINEER
2-15-08

klotz associates
1160 DAIRY ASHFORD, SUITE 500
HOUSTON, TX 77079
Phone: (281) 589-7257 Fax: (281) 589-7309

STATE OF TEXAS
RALPH E. COX
61026
REGISTERED PROFESSIONAL ENGINEER
2/15/08

SURVEYED BY: GEOSOLUTIONS, LTD
FB NO. P-5400

N/A
WATER

2/19/08
WASTEWATER

N/A
STORM WATER

N/A
STREET & BRIDGE

2-19-08
CONSTRUCTION

N/A
TRAFFIC AND TRANSPORTATION

Y.M. Mehta 2/20/08
SPONSOR DEPARTMENT

2/20/08
CHIEF ENGINEER

for CITY ENGINEER 2/27/08 DATE

DIRECTOR OF PUBLIC WORKS AND ENGINEERING 2/26/08 DATE

PUBLIC WORKS AND ENGINEERING
ACCEPTED & FILED
44488
CITY DRAWING NUMBER
HOUSTON, TEXAS

SHEET NO 01 OF 109 SHEETS

J:\0620.002.000\0700 CADD\Package 1\General\Almeda Sims-INDEX.dwg Feb 07,2008 - 3:09pm ramirezn

GENERAL SHEETS

1	G-100	COVER SHEET
2	G-101	DRAWING INDEX
3	G-102	GENERAL NOTES, ABBREVIATIONS AND LEGEND
4	G-103	WASTE SLUDGE PROCESS FLOW DIAGRAM

CIVIL/SITE DRAWINGS

5	C-100	SOLIDS HYDRAULIC PROFILE
6	C-200	EXISTING SITE PLAN - OVERALL
7	C-201	PROPOSED SITE PLAN - OVERALL
8	C-300	YARD PIPING PLAN (SHEET 1)
9	C-301	YARD PIPING PLAN (SHEET 2)
10	C-400	BLOWER BUILDING/SLUDGE HOLDING TANK AREA PLAN
11	C-401	GRAVITY THICKENER AREA PLAN DEMOLITION
12	C-402	GRAVITY THICKENER AREA PLAN
13	C-500	YARD PIPING CROSS SECTIONS (SHEET 1)
14	C-501	YARD PIPING CROSS SECTIONS (SHEET 2)
15	C-503	YARD PIPING CROSS SECTIONS (SHEET 3)
16	C-600	CITY OF HOUSTON STANDARD DETAILS (SHEET 1)
17	C-601	CITY OF HOUSTON STANDARD DETAILS (SHEET 2)
18	C-602	CITY OF HOUSTON STANDARD DETAILS (SHEET 3)
19	C-603	CITY OF HOUSTON STANDARD DETAILS (SHEET 4)
20	C-604	CITY OF HOUSTON STANDARD DETAILS (SHEET 5)
21	C-605	CITY OF HOUSTON STANDARD DETAILS (SHEET 6)

STRUCTURAL/MECHANICAL DETAIL DRAWINGS

22	D-100	MISCELLANEOUS DETAILS
23	D-101	STAIR DETAILS
24	D-102	STANDARD PIPE HANGER DETAILS
25	D-103	STANDARD PIPE SUPPORT DETAILS
26	D-104	MISCELLANEOUS STANDARD DETAILS
27	D-105	STANDARD STRUCTURAL DETAILS
28	D-106	STANDARD STRUCTURAL DETAILS - HANDRAILS
29	D-107	STANDARD STRUCTURAL DETAILS (SHEET 1)
30	D-108	STANDARD STRUCTURAL DETAILS (SHEET 2)
31	D-109	STANDARD MECHANICAL DETAILS (SHEET 1)
32	D-110	STANDARD MECHANICAL DETAILS (SHEET 2)

INSTRUMENTATION DRAWINGS

33	I-100	PROCESS AND INSTRUMENTATION DIAGRAM SYMBOLS
34	I-101	SCADA NETWORK SCHEMATIC
35	I-102	WAS PUMP STATION P&ID
36	I-103	SCREENING FACILITIES LAYOUT P&ID
37	I-104	ROTARY SCREEN DETAILS P&ID (1 OF 2)
38	I-105	ROTARY SCREEN DETAILS P&ID (2 OF 2)
39	I-106	BELT CONVEYOR DETAILS P&ID
40	I-107	THICKENERS & THICKENED SLUDGE PUMPS LAYOUT P&ID
41	I-108	THICKENER DETAILS P&ID
42	I-109	THICKENERS-TWAS PUMP DETAILS P&ID
43	I-110	SLUDGE HOLDING TANKS LAYOUT P&ID
44	I-111	SLUDGE HOLDING TANKS - VALVES AND TRANSMITTER DETAILS P&ID
45	I-112	SLUDGE HOLDING TANKS - BLOWER DETAILS P&ID
46	I-113	SLUDGE HOLDING TANKS - TWAS PUMP DETAILS P&ID

MECHANICAL DRAWINGS

47	M-100	DEMOLITION PLAN - EXISTING WAS PUMPS AND PIPING
48	M-101	PROPOSED WAS PUMPS LAYOUT & PIPING PLAN
49	M-102	PROPOSED WAS PUMPS ELEVATION & SECTIONS
50	M-200	PROPOSED SLUDGE SCREENING FACILITY SITE PLAN
51	M-201	PROPOSED SCREENING FACILITY PLAN
52	M-202	PROPOSED SCREENING FACILITY PROFILE
53	M-203	PROPOSED SCREENING FACILITY WEST ELEVATION
54	M-204	PROPOSED SCREENING FACILITY EAST ELEVATION
55	M-300	100-FT THICKENER MECHANICAL PLAN
56	M-301	100-FT THICKENER MECHANICAL SECTIONS & DETAILS
57	M-400	THICKENED SLUDGE PUMP STATION MECHANICAL PLAN AND SECTIONS
58	M-500	SLUDGE HOLDING TANK MECHANICAL PLAN (SHEET 1)
59	M-501	SLUDGE HOLDING TANK MECHANICAL PLAN (SHEET 2)
60	M-502	SLUDGE HOLDING TANK MECHANICAL SECTION (SHEET 1)
61	M-503	SLUDGE HOLDING TANK MECHANICAL SECTIONS (SHEET 2)
62	M-600	SLUDGE TRANSFER PUMP STATION MECHANICAL PLAN AND SECTIONS
63	M-700	BLOWER BUILDING LAYOUT
64	M-701	BLOWER BUILDING ELEVATIONS

STRUCTURAL DRAWINGS

65	S-100	MODIFICATION OF EXISTING SCREENING FACILITY
66	S-101	PROPOSED SCREENING FACILITY FOUNDATION PLAN
67	S-102	PROPOSED SCREENING FACILITY STRUCTURE PLAN
68	S-103	PROPOSED SCREENING FACILITY SECTIONS
69	S-104	PROPOSED SCREENING FACILITY WEST ELEVATION
70	S-105	PROPOSED SCREENING FACILITY GRATING PLAN
71	S-106	STRUCTURE DETAILS
72	S-200	100-FT THICKENER STRUCTURAL PLAN
73	S-201	100-FT THICKENER STRUCTURAL SECTIONS AND DETAILS
74	S-300	THICKENED SLUDGE PUMP STATION STRUCTURAL PLAN AND SECTIONS
75	S-400	SLUDGE HOLDING TANK STRUCTURAL PLAN (SHEET 1)
76	S-401	SLUDGE HOLDING TANK STRUCTURAL PLAN (SHEET 2)
77	S-402	SLUDGE HOLDING TANK STRUCTURAL SECTIONS
78	S-500	BLOWER BUILDING FOUNDATION PLAN AND SECTIONS
79	S-600	SLUDGE TRANSFER PUMP STRUCTURAL PLAN AND SECTIONS

ELECTRICAL DRAWINGS

80	E-001	ELECTRICAL SITE PLAN - OVERALL
81	E-002	ELECTRICAL LEGEND AND SYMBOLS
82	E-003	ELECTRICAL NOTES
83	E-100	EXISTING 2.4 KV ELECTRICAL SWITCHGEAR BLDG - ENLARGED SITE PLAN
84	E-101	2.4 KV ELECTRICAL DISTRIBUTION - ONE LINE DIAGRAM
85	E-102	EXISTING 2.4KV SWITCHGEAR BLDG - LIGHTING AND HOUSE LOAD MODIFICATIONS
86	E-200	THICKENER AREA - ENLARGED ELECTRICAL SITE PLAN
87	E-201	PROPOSED SCREENING FACILITY ELECTRICAL PLAN - PLAN VIEW
88	E-202	PROPOSED SCREENING FACILITY ELECTRICAL PLAN - EAST ELEVATION
89	E-203	PROPOSED SCREENING FACILITY ELECTRICAL PLAN - WEST ELEVATION
90	E-204	ELECTRICAL - PROPOSED MCC-3C ELEVATION AND PANEL SCHEDULES
91	E-205	ELECTRICAL - MCC-3C ONE LINE DIAGRAM AND DETAILS, SHEET 1 OF 2
92	E-206	ELECTRICAL - MCC-3C ONE LINE DIAGRAM AND DETAILS, SHEET 2 OF 2
93	E-300	PROPOSED WAS PUMP STATION ENLARGED ELECTRICAL SITE PLAN - 1 OF 2
94	E-301	PROPOSED WAS PUMP STATION ENLARGED ELECTRICAL SITE PLAN - 2 OF 2
95	E-302	ELECTRICAL - MCC-1 ELEVATIONS EXISTING & PROPOSED
96	E-400	BLOWER BUILDING & SLUDGE HOLDING TANK AREA - ENLARGED ELECTRICAL SITE PLAN
97	E-401	EXISTING SLUDGE PROCESSING BUILDING SUBSTATION - 12.47KV - ONE LINE DIAGRAM
98	E-500	BLOWER BUILDING - POWER AND LIGHTING PLANS
99	E-501	SLUDGE TRANSFER PUMP STATION - ELECTRICAL PLAN
100	E-502	SLUDGE HOLDING TANK - NORTH ELECTRICAL PLAN
101	E-503	SLUDGE HOLDING TANK - SOUTH ELECTRICAL PLAN
102	E-504	ELECTRICAL - PROPOSED MCC-2C ELEVATION AND PANEL SCHEDULES
103	E-505	ELECTRICAL - MCC-2C ONE LINE DIAGRAM & DETAILS, SHEET 1 OF 2
104	E-506	ELECTRICAL - MCC-2C ONE LINE DIAGRAM & DETAILS, SHEET 2 OF 2
105	E-600	ELECTRICAL DETAILS - DUCTBANKS
106	E-601	ELECTRICAL DETAILS - ELECTRICAL HAND HOLES
107	E-602	ELECTRICAL DETAILS - GROUNDING ELEMENTS AND TRANSFORMER PAD
108	E-603	ELECTRICAL DETAILS - LIGHT STANCHION & EQUIPMENT RACK
109	E-604	ELECTRICAL DETAILS - CONTROL SCHEMATICS

COLOR TABLE:

ORIGINAL SCALE IN INCHES FOR REDUCED PLANS
0 1 2 3

RECORD DRAWING

THE CONSTRUCTION CONTRACTOR RECORDED CHANGES MADE DURING CONSTRUCTION ON PRINTS OF THE CONTRACT DRAWINGS.

KLOTZ ASSOCIATES, INC. HAS CREATED THIS RECORD DRAWING BY PASTING THE INFORMATION SUBMITTED BY THE CONTRACTOR ON THE ORIGINALS OF THE CONTRACT DRAWINGS. ATTESTED BY:

SIGNATURE: Ralph E. Cox

NAME: RALPH E. COX, P.E

DATE: 12/22/11

No.	Date	Revisions	App.

STATE OF TEXAS
RALPH E. COX
61026
REGISTERED
PROFESSIONAL ENGINEER
2/11/08

klotz associates

Binkley & Barfield
consulting engineers
1710 Seamist Drive
Houston, Texas 77008-3189
(713) 869-3433

SURVEYED BY: GEOSOLUTIONS | FIELD BOOK NO. : N/A

CITY OF HOUSTON
DEPARTMENT OF PUBLIC WORKS AND ENGINEERING

ALMEDA SIMS WWTP & SPF IMPROVEMENTS PACKAGE I

DRAWING INDEX

FILE NO:	WW4903
WBS:	000298-0004-4
DRAWING SCALE	NONE
CITY OF HOUSTON PM	IRAJ RANJBAR, P.E.
DWG NO. :	G-101
SHEET NO.	2 OF 109

PUBLIC WORKS AND ENGINEERING
ACCEPTED & FILED
44488
CITY DRAWING NUMBER
HOUSTON, TEXAS

J:\0620.002.000\07.00 CADD\Package 1\General\general notes.dwg Feb 07,2008 - 3:13pm ramirezm

UTILITY NOTES

CENTERPOINT ENERGY (GAS FACILITIES):

CAUTION: UNDERGROUND GAS FACILITIES:
LOCATION OF CENTERPOINT ENERGY MAIN LINES (TO INCLUDE UNIT GAS TRANSMISSION AND/OR INDUSTRIAL GAS SUPPLY CORPORATION WHERE APPLICABLE) ARE SHOWN IN AN APPROXIMATE LOCATION ONLY. SERVICE LINES ARE USUALLY NOT SHOWN. OUR SIGNATURE ON THESE PLANS ONLY INDICATES THAT OUR FACILITIES ARE SHOWN IN APPROXIMATE LOCATION. IT DOES NOTE IMPLY THAT A CONFLICT ANALYSIS HAS BEEN MADE. CONTACT THE UTILITY COORDINATING COMMITTEE AT (713) 223-4567 OR (800) 669-8344 A MINIMUM OF 48-HOURS PRIOR TO CONSTRUCTION TO HAVE MAIN AND SERVICE LINES FIELD LOCATED.

1. WHEN CENTERPOINT ENERGY PIPELINE MARKINGS ARE NOT VISIBLE, CALL (713) 967-8037 (7:00 A.M. TO 4:30 P.M.) FOR STATUS OF LINE LOCATION REQUEST BEFORE EXCAVATION BEGINS.
2. WHEN EXCAVATING WITHIN EIGHTEEN (18) INCHES OF THE INDICATED LOCATION OF CENTERPOINT ENERGY FACILITIES, ALL EXCAVATION MUST BE ACCOMPLISHED USING NON-MECHANIZED EXCAVATION PROCEDURES.
3. WHEN CENTERPOINT ENERGY FACILITIES ARE EXPOSED, SUFFICIENT SUPPORT MUST BE PROVIDED TO THE FACILITIES TO PREVENT EXCESSIVE STRESS ON THE PIPING.
4. CONTRACTOR IS FULLY RESPONSIBLE FOR ANY DAMAGES CAUSED BY THE CONTRACTOR'S FAILURE TO EXACTLY LOCATE AND PRESERVE THESE UNDERGROUND FACILITIES.

CENTERPOINT ENERGY (ELECTRICAL FACILITIES):

1. OVERHEAD LINES MAY EXIST ON THE PROPERTY, WE HAVE NOT ATTEMPTED TO MARK THOSE LINES SINCE THEY ARE CLEARLY VISIBLE. LOCATE SUCH LINES PRIOR TO BEGINNING ANY CONSTRUCTION. TEXAS LAW, SECTION 752, HEALTH AND SAFETY CODE, FORBIDS ALL ACTIVITIES IN WHICH PERSONS OR THINGS MAY COME WITHIN 6-FEET OF LIVE OVERHEAD HIGH VOLTAGE LINES. PARTIES RESPONSIBLE FOR THE WORK INCLUDING CONTRACTORS, ARE LEGALLY RESPONSIBLE FOR THE SAFETY OF CONSTRUCTION WORKERS UNDER THIS LAW. THIS LAW CARRIES BOTH CRIMINAL AND CIVIL LIABILITY. TO ARRANGE FOR LINES TO BE TURNED OFF OR REMOVED CALL CENTERPOINT ENERGY AT (713) 207-7777.
2. COORDINATE WITH CENTERPOINT ENERGY ELECTRIC BEFORE WORKING WITHIN 10-FEET OF OVERHEAD POWER LINES. CONTACT CENTERPOINT ENERGY ELECTRIC REPRESENTATIVES AT (713) 207-7777 OR (713) 923-3292 FOR POLES TO BE BRACED AND LINES TO BE DE-ENERGIZED AND/OR MOVED. CONTRACTOR SHALL BE RESPONSIBLE TO CENTERPOINT ENERGY ELECTRIC FOR ANY COSTS ASSOCIATED WITH BRACING OF POWER POLES OR DE-ENERGIZING AND/OR MOVING ANY CONFLICTING OVERHEAD POWER LINES.
3. TO STAKE CENTERPOINT ENERGY ELECTRIC UNDERGROUND FACILITIES, CALL THE LONE STAR INFORMATION CENTER AT (713) 223-4567, OR TOLL FREE AT (800) 669-8344, AT LEAST 48-HOURS BEFORE STARTING EXCAVATION.
4. PRIVATE UNDERGROUND ELECTRICAL FACILITIES MAY EXIST IN THE AREA AND THESE WILL NOT BE STAKED BY CENTERPOINT ENERGY ELECTRIC PERSONNEL.

SBC FACILITIES

1. THE LOCATIONS OF SBC FACILITIES ARE SHOWN IN AN APPROXIMATE WAY ONLY. DETERMINE THE EXACT LOCATION BEFORE COMMENCING WORK. CONTRACTOR AGREES TO BE FULLY RESPONSIBLE FOR ANY AND ALL DAMAGES WHICH MIGHT BE OCCASIONED BY HIS/HER FAILURE TO EXACTLY LOCATE AND PRESERVE THESE UNDERGROUND UTILITIES.
2. CALL (800) 344-8377 A MINIMUM OF 48 HOURS PRIOR TO CONSTRUCTION TO HAVE UNDERGROUND LINES FIELD LOCATED.
3. WHEN EXCAVATING WITHIN EIGHTEEN INCHES (18") OF THE INDICATED LOCATION OF SBC FACILITIES, ALL EXCAVATIONS MUST BE ACCOMPLISHED USING NON- MECHANIZED EXCAVATION PROCEDURES. WHEN BORING, EXPOSE SBC FACILITIES.
4. WHEN SBC FACILITIES ARE EXPOSED, PROVIDE SUPPORT TO PREVENT DAMAGE TO THE CONDUIT DUCTS OR CABLES. WHEN EXCAVATING NEAR TELEPHONE POLES, BRACE FOR SUPPORT.

COLOR TABLE:

ORIGINAL SCALE IN INCHES FOR REDUCED PLANS
0 1 2 3

DRAWING SYMBOLS LEGEND

EXISTING

- EXISTING STRUCTURES AND SITE BACKGROUND
- EXISTING CENTERLINE OF DITCH
- EXISTING EDGE OF ROAD
- EXISTING ELECTRIC
- EXISTING BARBED WIRE FENCE
- EXISTING CHAINLINK FENCE
- EXISTING TOP OF BANK
- EXISTING TOE OF BANK
- EXISTING ABOVE GROUND PIPING
- EXISTING UNDERGROUND PIPING
- EXISTING TO BE REMOVED
- EXISTING MANHOLE (MH)
- EXISTING SPOT ELEVATION (X 34.00)
- TEMPORARY BENCHMARK (TBM)
- DIRECTION OF FLOW
- WATER VALVE (WV)
- POWER POLE

PROPOSED

- PROPOSED STRUCTURES
- FUTURE STRUCTURES
- CENTERLINE OF PROPOSED DRAINAGE SWALE
- EDGE OF PROPOSED ROAD
- PROPOSED CHAINLINK FENCE
- PROPERTY LINE
- PROPOSED ABOVE GROUND PIPING
- PROPOSED BURIED PIPING < 24"
- PROPOSED BURIED PIPING > 24"
- PROPOSED SILT FENCE
- PROPOSED SPOT ELEVATION (× 34.0)

GENERAL, CIVIL & PROCESS ABBREVIATIONS

ADDL	ADDITIONAL
ACH	AIR CONDITIONING/HEATING UNIT
ALT	ALTERNATE
AM	AMMONIA
AVG	AVERAGE
℄	CENTER LINE
CFM	CUBIC FEET PER MINUTE
CLR	CLEAR DISTANCE
CFS	CUBIC FEET PER SECOND
DISH	DISCHARGE
EF	EACH FACE
EL	ELEVATION
EXIST	EXISTING
FG	FINISHED GRADE
FL	FLOW LINE
GALV	GALVANIZED
GPM	GALLONS PER MINUTE
HP	HIGH POINT
HWL	HIGH WATER LEVEL
IE	INVERT ELEVATION
LP	LOW POINT
LWL	LOW WATER LEVEL
MAX	MAXIMUM
MGD	MILLION GALLONS PER DAY
MH	MANHOLE
MIN	MINIMUM
MISC	MISCELLANEOUS
NG	NATURAL GROUND
OPNG	OPENING
PK	PEAK
PROP	PROPOSED
REF	REFERENCE
REQD	REQUIRED
SHT	SHEET
SIM	SIMILAR
SPECS	SPECIFICATIONS
SS	STAINLESS STEEL
SUP	SUPPORT
TYP	TYPICAL
UNO	UNLESS NOTED OTHERWISE
WS	WATER SURFACE
YH	YARD HYDRANT

VALVE ABBREVIATIONS

ARV	AIR RELEASE VALVE
AVRV	AIR/VACUUM RELEASE VALVE
CV	CHECK VALVE
GV	GATE VALVE
PV	PLUG VALVE
SV	SOLENOID VALVE
TV	TELESCOPING VALVE

PIPING ABBREVIATIONS

BOP	BOTTOM OF PIPE
DIP	DUCTILE IRON PIPE
DIPUL	DUCTILE IRON UNLINED PIPE
FCA	FLANGED COUPLING ADAPTER
FE	FLANGED END
GALV. STL.	GALVANIZED STEEL
MJ	MECHANICAL JOINT
PE	PLAIN END
PO	PUSH ON
PT	POLYETHYLENE TUBING
PVC	POLYVINYL CHLORIDE
WC	WALL COLLAR

SERVICE ABBREVIATIONS

BP	BY-PASS
CE	CLARIFIER INFLUENT
CO	CLEAN OUT
DA	DIFFUSED AIR
DR	DRAIN
DWS	DEWATERED SLUDGE
ED	EQUIPMENT DRAIN
EFF	EFFLUENT
FI	FILTRATE
FM	FORCEMAIN
ML	MIXED LIQUOR
NPW	NONPOTABLE WATER
PA	PLANT AIR
PD	PLANT DRAIN
PE	PLANT EFFLUENT
PW	POTABLE WATER
RAS	RETURN ACTIVATED SLUDGE
RS	RAW SEWAGE
SS	SANITARY SEWER
SE	SETTLED EFFLUENT
SN	SUPERNATANT
TKD	TANK DRAIN
TS	THICKENED SLUDGE
TWAS	THICKENED WASTE ACTIVATED SLUDGE
WAS	WASTE ACTIVATED SLUDGE

STRUCTURAL ABBREVIATIONS

ADDL	ADDITIONAL
&	AND
ARCH	ARCHITECTURAL
BM	BEAM
BOS	BOTTOM OF STEEL
BOT	BOTTOM
BLDG	BUILDING
℄	CENTER LINE
c/c	CENTER TO CENTER
CLR	CLEAR(ANCE)
COL	COLUMN
CONC	CONCRETE
CONST	CONSTRUCTION
CONT.	CONTINUOUS
DIA	DIAMETER
ø	DIAMETER
DWL	DOWEL
EA	EACH
EF	EACH FACE
EL	ELEVATION
EQ	EQUAL
EW	EACH WAY
EXP	EXPANSION
EXT	EXTERIOR
FDN	FOUNDATION
FF	FINISHED FLOOR
FTG	FOOTING
HP	HIGH POINT
HORIZ	HORIZONTAL
JT	JOINT
LLH	LONG LEG HORIZONTAL
LLV	LONG LEG VERTICAL
LP	LOW POINT
MAX	MAXIMUM
MISC	MISCELLANEOUS
#	NUMBER
OPNG	OPENING
R	RADIUS
REINF	REINFORCEMENT
REQD	REQUIRED
SCHED	SCHEDULE
SECT	SECTION
SP	SPACES
SS	STAINLESS STEEL
STD	STANDARD
T	TOP
TOC	TOP OF CONCRETE
TOG	TOP OF GROUT
TOS	TOP OF STEEL
VAR	VARIES
VERT	VERTICAL
w/	WITH

SECTIONS AND DETAILS

ON SHEETS WHERE SECTION IS CUT AND SHOWN:
A / – : A = SECTION IDENTIFICATION; – = SECTION SHOWN ON SAME SHEET

ON SHEETS WHERE SECTION IS CUT:
A / C2 : A = SECTION IDENTIFICATION; C2 = SHEET WHERE SECTION IS SHOWN

ON SHEETS WHERE SECTION IS SHOWN:
A / C6 : A = SECTION IDENTIFICATION; C6 = SHEET WHERE SECTION IS CUT

ON SHEETS WHERE SECTION IS SHOWN:
SECTION A — SCALE: (SEE SHT H-1) : A = SECTION IDENTIFICATION; (SEE SHT H-1) = SHEETS WHERE SECTION IS CUT

ON SHEETS WHERE DETAIL IS IDENTIFIED AND SHOWN
1 / – : 1 = DETAIL IDENTIFICATION; – = SHEET WHERE DETAIL IS SHOWN

ON SHEETS WHERE DETAIL IS IDENTIFIED:
1 / S8 : 1 = DETAIL IDENTIFICATION; S8 = SHEET WHERE DETAIL IS SHOWN

ON SHEETS WHERE DETAIL IS SHOWN:
1 / S2 : 1 = DETAIL IDENTIFICATION; S2 = SHEET WHERE DETAIL IS IDENTIFIED

ON SHEETS WHERE DETAIL IS SHOWN:
DETAIL 1 — SCALE: (SEE SHT H-1) : 1 = DETAIL IDENTIFICATION; (SEE SHT H-1) = SHEETS WHERE DETAIL IS IDENTIFIED

RECORD DRAWING

THE CONSTRUCTION CONTRACTOR RECORDED CHANGES MADE DURING CONSTRUCTION ON PRINTS OF THE CONTRACT DRAWINGS.

KLOTZ ASSOCIATES, INC. HAS CREATED THIS RECORD DRAWING BY POSTING THE INFORMATION SUBMITTED BY THE CONTRACTOR ON THE ORIGINALS OF THE CONTRACT DRAWINGS. ATTESTED BY:

SIGNATURE:
NAME: RALPH E. COX, P.E.
DATE: 12/02/11

No.	Date	Revisions	App.

STATE OF TEXAS — RALPH E. COX — 61026 — REGISTERED PROFESSIONAL ENGINEER — 2/11/08

klotz associates

Binkley & Barfield consulting engineers
1710 Seamist Drive
Houston, Texas 77008-3189
(713) 869-3433

SURVEYED BY: GEOSOLUTIONS | FIELD BOOK NO. : N/A

CITY OF HOUSTON
DEPARTMENT OF PUBLIC WORKS AND ENGINEERING

ALMEDA SIMS WWTP & SPF IMPROVEMENTS PACKAGE I

GENERAL NOTES, ABBREVIATIONS AND LEGEND

FILE NO:	WW4903
WBS:	000298-0004-4
DRAWING SCALE	NONE
CITY OF HOUSTON PM	IRAJ RANJBAR, P.E.
DWG NO. :	G-102
SHEET NO.	3 OF 109

PUBLIC WORKS AND ENGINEERING — ACCEPTED & FILED — 44488 — CITY DRAWING NUMBER — HOUSTON, TEXAS

COLOR TABLE: ENVIRO-RD.ctb
G:\115800 Almeda\CADD_G-103_Sludge Process Flow Diagram.dwg Feb 12,2008 - 9:57am mjd

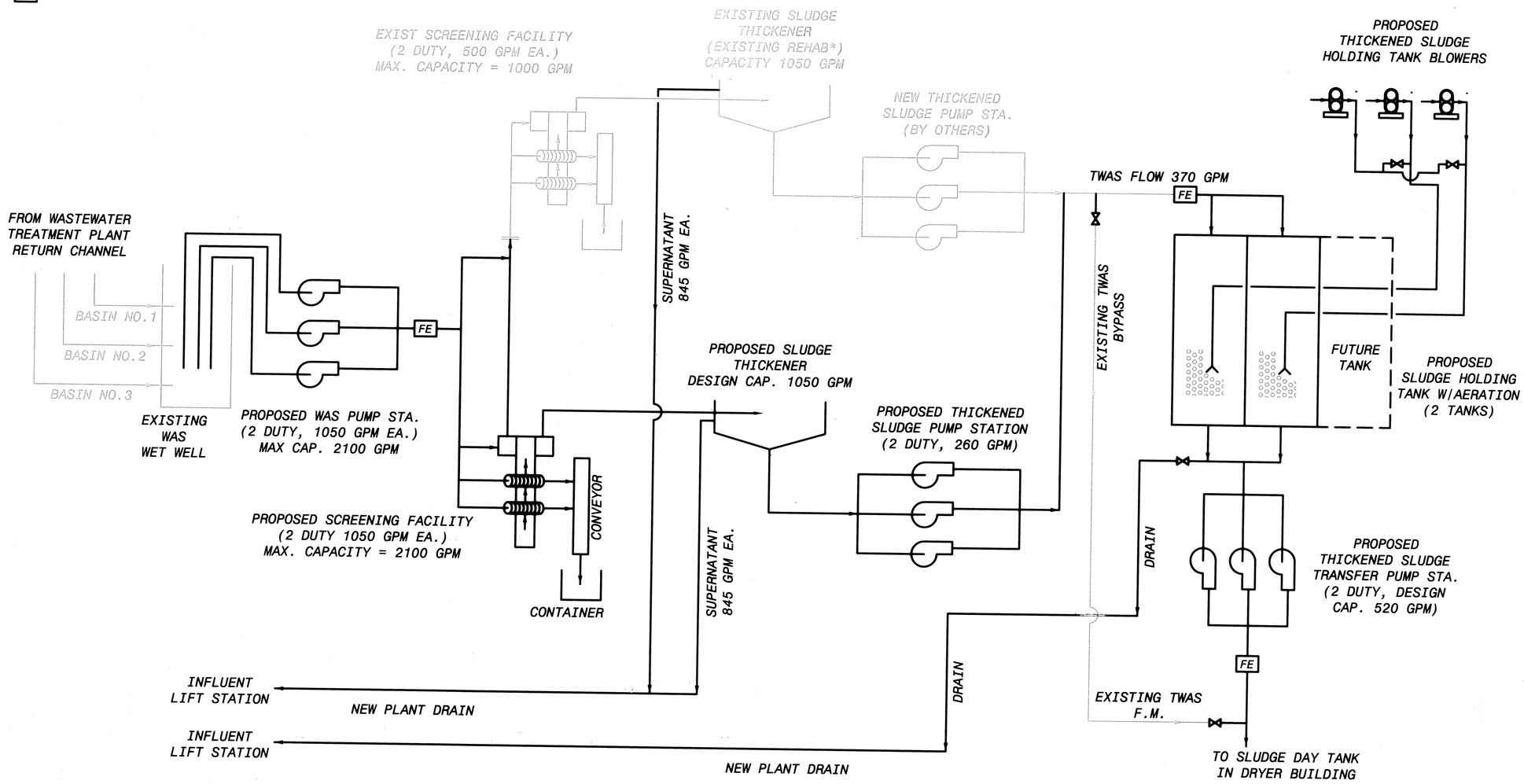

Parameter	% CAPTURED SOLIDS		Units	ALMEDA SIMS SPF SLUDGE PROCESS DESIGN FLOW (2025 PEAK MONTH) 7 Day/Week - 24 Hours/Day Wet Sludge Process				5 Day/Wk Operation
				WAS	Sludge Thickener		Thickened Sludge Storage Tank	
Stream	In process			WAS Pump Sta.	Supernatant	Thickened Sludge	To Holding Tank	To Sludge Drying
Solids Qty.		100%	dry tons/day	55.55	0	55.55	55.55	77.77
		100%	dry lbs/day	111,100	0	111,100	111,100	155,540
		100%	% Solids	0.45%	0.0	2.50%	2.50%	2.50%
			wet lbs/day	24,688,900	0	4,444,000	4,444,000	6,221,600
Sludge Flow			gpm	2060	1,690	370	370	520

Note: *wet sludge lbs/day = (dry solid lbs/day) / % Solids*

*Sludge Flow, gpm = (wet sludge lbs/day) / (8.34 * 1440)*

Supernatant, gpm = WAS - Thicked Sludge

AS BUILT

ORIGINAL SCALE IN INCHES FOR REDUCED PLANS
0 1 2 3

No.	Date	Revisions	App.

STATE OF TEXAS
LI CHUNG CHEN
98576
REGISTERED PROFESSIONAL ENGINEER
2-11-08

klotz associates

Binkley & Barfield
consulting engineers
1710 Seamist Drive
Houston, Texas 77008-3189
(713) 869-3433

SURVEYED BY: GEOSOLUTIONS | FIELD BOOK NO. : N/A

CITY OF HOUSTON
DEPARTMENT OF PUBLIC WORKS AND ENGINEERING

ALMEDA SIMS WWTP & SPF IMPROVEMENTS PACKAGE I

WASTE SLUDGE PROCESS FLOW DIAGRAM

FILE NO:	WW4903
WBS:	R-000298-0004-4
DRAWING SCALE	NTS
CITY OF HOUSTON PM	IRAJ RANJBAR, P.E.
DWG NO. :	G-103
SHEET NO.	4 OF 109

PUBLIC WORKS AND ENGINEERING ACCEPTED & FILED 44488-4 CITY DRAWING NUMBER HOUSTON, TEXAS

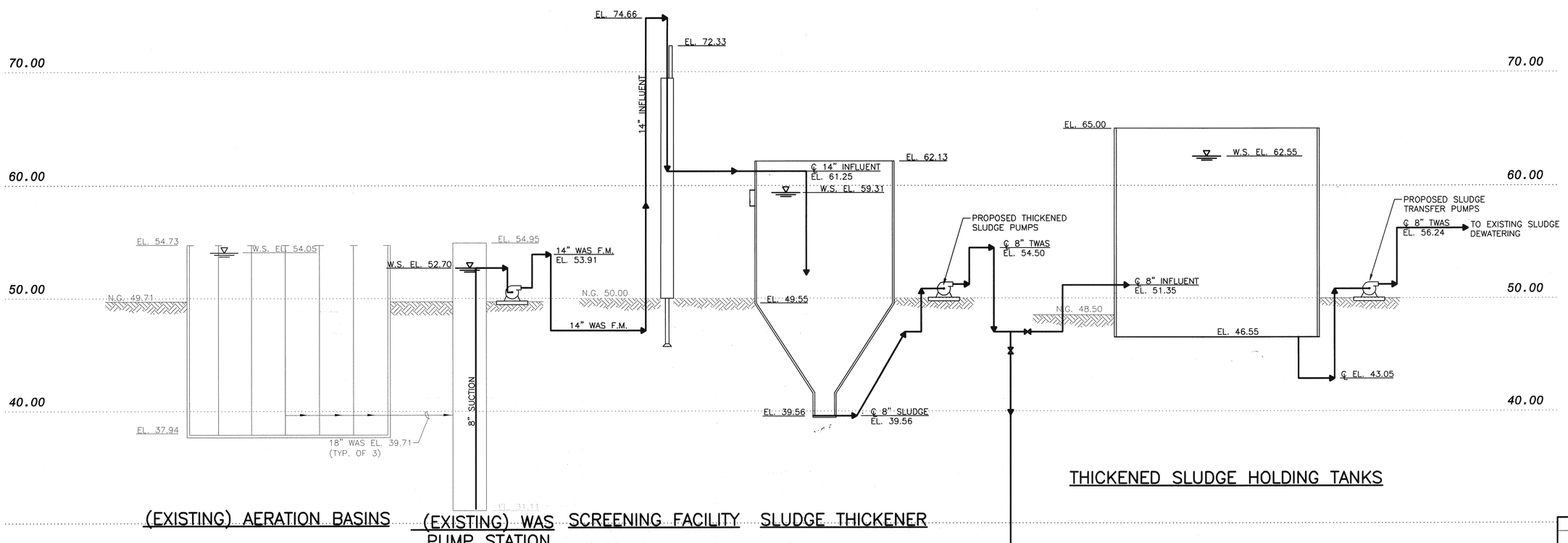

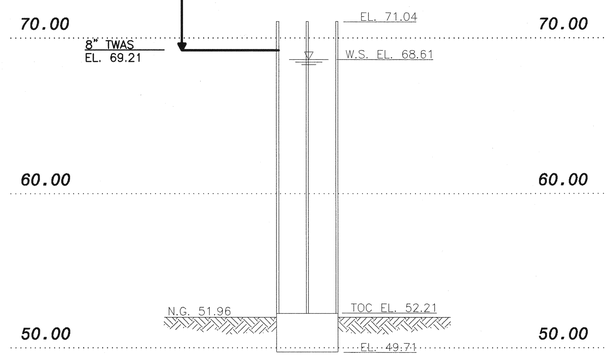

(EXISTING) SLUDGE DEWATERING
DAY TANK IN SOLIDS BLDG

RECORD DRAWING

THE CONSTRUCTION CONTRACTOR RECORDED CHANGES MADE DURING CONSTRUCTION ON PRINTS OF THE CONTRACT DRAWINGS.

KLOTZ ASSOCIATES, INC. HAS CREATED THIS RECORD DRAWING BY POSTING THE INFORMATION SUBMITTED BY THE CONTRACTOR ON THE ORIGINALS OF THE CONTRACT DRAWINGS. ATTESTED BY:

SIGNATURE: Ralph E. Cox

NAME: RALPH E. COX, P.E.

DATE: 12/02/11

No.	Date	Revisions	App.

STATE OF TEXAS
RALPH E. COX
61026
REGISTERED
PROFESSIONAL ENGINEER
2/11/08

klotz associates

Binkley & Barfield
consulting engineers
1710 Seamist Drive
Houston, Texas 77008-3189
(713) 869-3433

SURVEYED BY: GEOSOLUTIONS | FIELD BOOK NO. : N/A

CITY OF HOUSTON
DEPARTMENT OF PUBLIC WORKS AND ENGINEERING

ALMEDA SIMS WWTP & SPF IMPROVEMENTS PACKAGE I

SOLIDS HYDRAULIC PROFILE

FILE NO:	WW4903
WBS:	000298-0004-4
DRAWING SCALE	
H: 1"=10' V: 1"=100'	
CITY OF HOUSTON PM	
IRAJ RANJBAR, P.E.	
DWG NO. :	C-100
SHEET NO.	5 OF 109

PUBLIC WORKS AND ENGINEERING
ACCEPTED & FILED
44488
CITY DRAWING NUMBER
HOUSTON, TEXAS

J:\0620.002.000\07.00 CADD\Package 1\General\Hydraulic Profile2.dwg Feb 07,2008 - 3:14pm ramirezm

COLOR TABLE:

ORIGINAL SCALE IN INCHES
FOR REDUCED PLANS
0 1 2 3

J:\0620.002.000\07.00 CADD\Package 1\Civil\Exist Site Plan.dwg Feb 07,2008 - 3:18pm ramirezn

COLOR TABLE:

ORIGINAL SCALE IN INCHES
FOR REDUCED PLANS
0 1 2 3

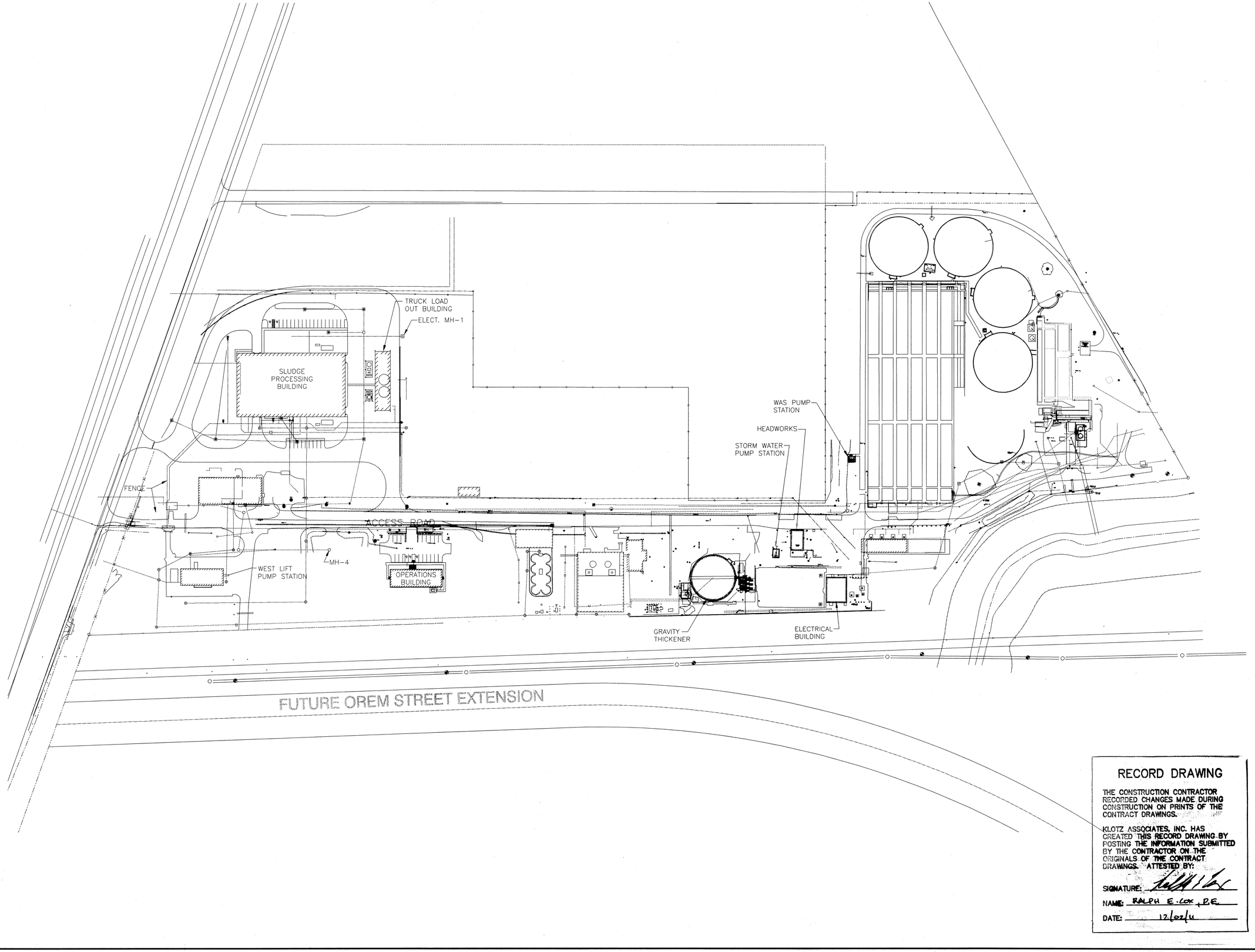

N

0 100 200
SCALE 1"=100'

No.	Date	Revisions	App.

STATE OF TEXAS
RALPH E. COX
61026
REGISTERED PROFESSIONAL ENGINEER
2/11/08

klotz associates

Binkley & Barfield
consulting engineers
1710 Seamist Drive
Houston, Texas 77008-3189
(713) 869-3433

SURVEYED BY: GEOSOLUTIONS | FIELD BOOK NO. : N/A

CITY OF HOUSTON
DEPARTMENT OF PUBLIC WORKS AND ENGINEERING

ALMEDA SIMS WWTP & SPF IMPROVEMENTS PACKAGE I

EXISTING SITE PLAN OVERALL

RECORD DRAWING

THE CONSTRUCTION CONTRACTOR RECORDED CHANGES MADE DURING CONSTRUCTION ON PRINTS OF THE CONTRACT DRAWINGS.

KLOTZ ASSOCIATES, INC. HAS CREATED THIS RECORD DRAWING BY POSTING THE INFORMATION SUBMITTED BY THE CONTRACTOR ON THE ORIGINALS OF THE CONTRACT DRAWINGS. ATTESTED BY:

SIGNATURE: _____
NAME: RALPH E. COX, P.E.
DATE: 12/02/14

FILE NO:	WW4903
WBS:	000298-0004-4
DRAWING SCALE	AS SHOWN
CITY OF HOUSTON PM	IRAJ RANJBAR, P.E.
DWG NO. :	C-200
SHEET NO.	6 OF 109

PUBLIC WORKS AND ENGINEERING
ACCEPTED & FILED
44488
CITY DRAWING NUMBER
HOUSTON, TEXAS

J:\0620.002.000\0700 CADD\Package 1\Civil\Prop Site Plan.dwg, Feb 07,2008 - 3:19pm ramirezm

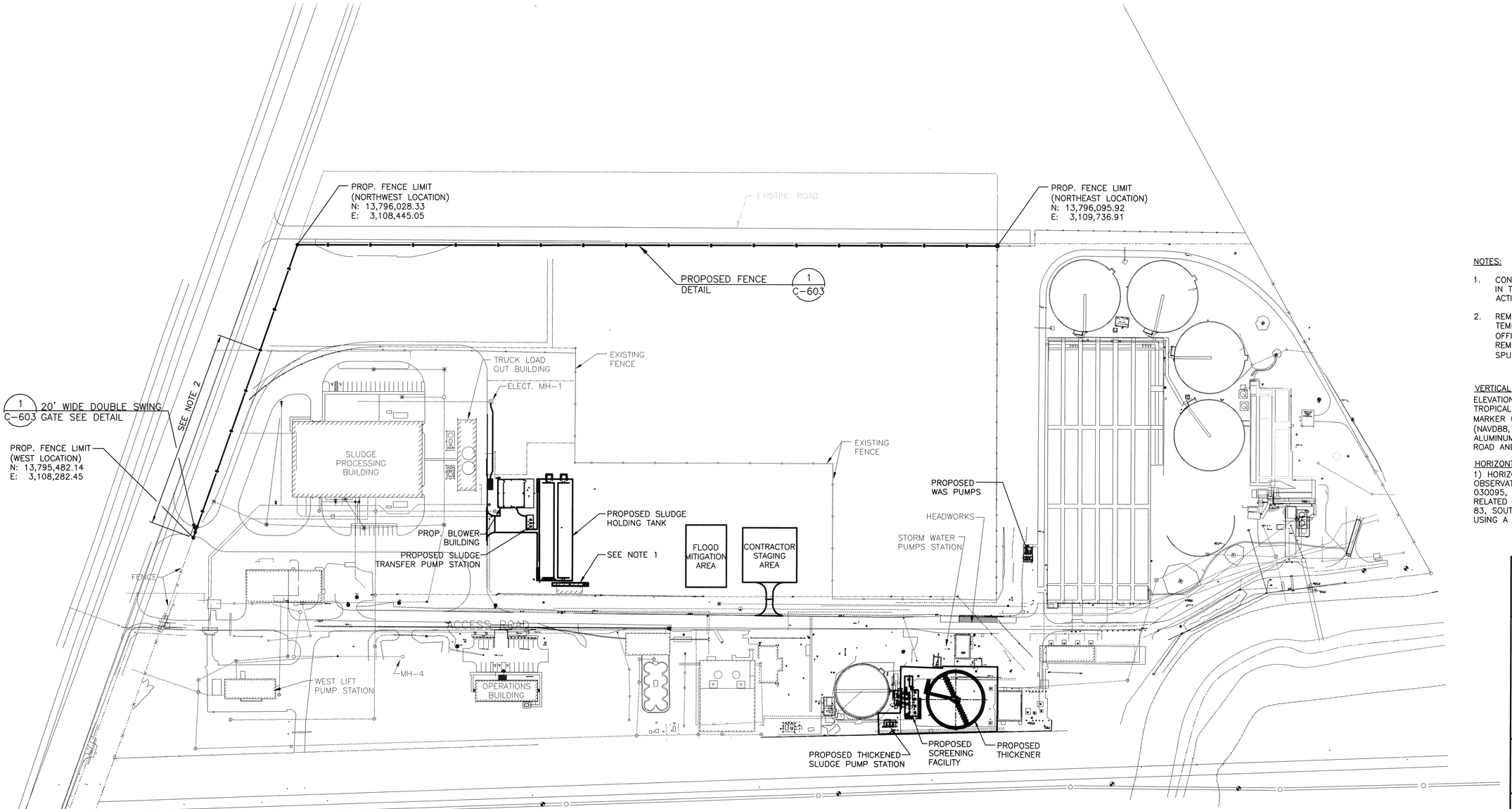

0 100 200

SCALE 1"=100'

NOTES:

1. CONTRACTOR SHALL REMOVE ALL EXISTING PAVMENTS IN THIS AREA AS REQUIRED FOR CONSTRUCTION ACTIVITIES.
2. REMOVE AND REPLACE FENCE AND GATE. PROVIDE TEMPORARY SECURITY FENCE OR UNIFORMED POLICE OFFICER 24/7 TO MAINTAIN SECURITY TO PLANT. REMOVE AND DISPOSE OF EXIST. ABANDONED RAIL SPUR AS REQ'D FOR INSTALLATION OF NEW FENCE.

VERTICAL CONTROL:

ELEVATIONS ARE BASED ON A LINE LEVEL LOOP FROM TROPICAL STORM ALLISON RECOVERY PROJECT REFERENCE MARKER 030085. WITH A PUBLISHED ELEVATION OF 44.50'. (NAVD88, 2001 ADJUSTMENT).
ALUMINUM ROD STAMPED 030085 LOCATED AT ALMEDA ROAD AND MOWERY ROAD.

HORIZONTAL CONTROL:

1) HORIZONTAL CONTROL IS BASED ON RTK GPS OBSERVATIONS HOLDING TSARP MONUMENTS 030430, 030095, 030090, AND 030085. ALL COORDINATES ARE RELATED TO TEXAS STATE PLANE COORDINATE SYSTEM NAD 83, SOUTH CENTRAL ZONE. COORDINATES ARE SURFACE USING A SURFACE ADJUSTMENT FACTOR OF 1.00012183.

No.	Date	Revisions	App.

STATE OF TEXAS
RALPH E. COX
61026
REGISTERED
PROFESSIONAL ENGINEER
2/11/08

klotz associates

Binkley & Barfield
consulting engineers
1710 Seamist Drive
Houston, Texas 77008-3189
(713) 869-3433

SURVEYED BY: GEOSOLUTIONS | FIELD BOOK NO. : N/A

CITY OF HOUSTON
DEPARTMENT OF PUBLIC WORKS AND ENGINEERING

ALMEDA SIMS WWTP & SPF IMPROVEMENTS PACKAGE I

PROPOSED SITE PLAN OVERALL

RECORD DRAWING

THE CONSTRUCTION CONTRACTOR RECORDED CHANGES MADE DURING CONSTRUCTION ON PRINTS OF THE CONTRACT DRAWINGS.

KLOTZ ASSOCIATES, INC. HAS CREATED THIS RECORD DRAWING BY POSTING THE INFORMATION SUBMITTED BY THE CONTRACTOR ON THE ORIGINALS OF THE CONTRACT DRAWINGS. ATTESTED BY:

SIGNATURE: _____
NAME: RALPH E. COX, P.E.
DATE: 12/02/11

FILE NO:	WW4903
WBS:	000298-0004-4
DRAWING SCALE	AS SHOWN
CITY OF HOUSTON PM	IRAJ RANJBAR, P.E.
DWG NO. :	C-201
SHEET NO.	7 OF 109

PUBLIC WORKS AND ENGINEERING
ACCEPTED & FILED
CITY DRAWING NUMBER
HOUSTON, TEXAS

COLOR TABLE:

ORIGINAL SCALE IN INCHES FOR REDUCED PLANS
0 1 2 3

J:\0620.002.000\07.00 CADD\Package 1 (addendum)\Civil\Yard Piping 1.dwg Mar 26,2008 - 10:50am lewiss

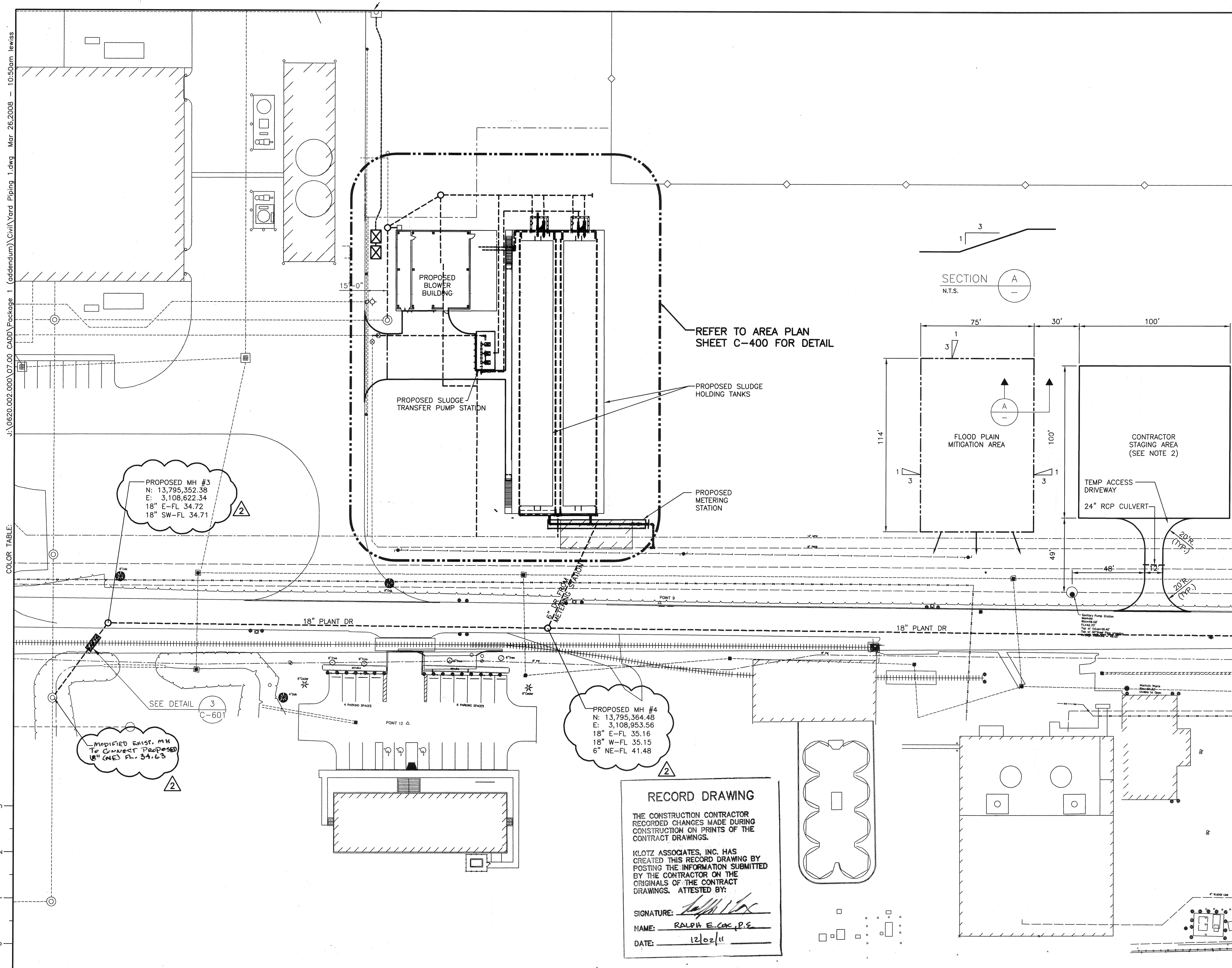

RECORD DRAWING

THE CONSTRUCTION CONTRACTOR RECORDED CHANGES MADE DURING CONSTRUCTION ON PRINTS OF THE CONTRACT DRAWINGS.

KLOTZ ASSOCIATES, INC. HAS CREATED THIS RECORD DRAWING BY POSTING THE INFORMATION SUBMITTED BY THE CONTRACTOR ON THE ORIGINALS OF THE CONTRACT DRAWINGS. ATTESTED BY:

SIGNATURE: [signature]

NAME: RALPH E. COX, P.E.

DATE: 12/02/11

0 30 60

SCALE 1"=30'

NOTE:

1. EXISTING UNDERGROUND PIPING AND UTILITY LOCATIONS TO BE FIELD VERIFIED PRIOR TO CONSTRUCTION.
2. CONTRACTOR SHALL REMOVE TEMPORARY ACCESS DRIVEWAY, 24" CULVERT AND RESTORE CONTRACTOR STAGING AREA TO ORIGINAL CONDITIONS WHEN CONSTRUCTION OF THIS CONTRACT IS COMPLETED.

VERTICAL CONTROL:

ELEVATIONS ARE BASED ON A LINE LEVEL LOOP FROM TROPICAL STORM ALLISON RECOVERY PROJECT REFERENCE MARKER 030085. WITH A PUBLISHED ELEVATION OF 44.50'. (NAVD88, 2001 ADJUSTMENT).
ALUMINUM ROD STAMPED 030085 LOCATED AT ALMEDA ROAD AND MOWERY ROAD.

HORIZONTAL CONTROL:

1) HORIZONTAL CONTROL IS BASED ON RTK GPS OBSERVATIONS HOLDING TSARP MONUMENTS 030430, 030095, 030090, AND 030085. ALL COORDINATES ARE RELATED TO TEXAS STATE PLANE COORDINATE SYSTEM NAD 83, SOUTH CENTRAL ZONE. COORDINATES ARE SURFACE USING A SURFACE ADJUSTMENT FACTOR OF 1.00012183.

No.	Date	Revisions	App.
2	3/26/08	ADDENDUM NO. 2	

STATE OF TEXAS — ROBERT J. ROBINSON — 39056 — REGISTERED PROFESSIONAL ENGINEER — 3/26/08

klotz associates

Binkley & Barfield consulting engineers
1710 Seamist Drive
Houston, Texas 77008-3189
(713) 869-3433

SURVEYED BY: GEOSOLUTIONS	FIELD BOOK NO.: N/A

CITY OF HOUSTON
DEPARTMENT OF PUBLIC WORKS AND ENGINEERING

ALMEDA SIMS WWTP & SPF IMPROVEMENTS PACKAGE I

YARD PIPING PLAN
(SHEET 1)

FILE NO: WW4903	
WBS: 000298-0004-4	
DRAWING SCALE	
AS SHOWN	
CITY OF HOUSTON PM	
IRAJ RANJBAR, P.E.	
DWG NO.: C-300	
SHEET NO. 8 OF 109	

PUBLIC WORKS AND ENGINEERING — ACCEPTED & FILED — 44488 — CITY DRAWING NUMBER — HOUSTON, TEXAS

J:\0620.002.000\07.00 CADD\Package 1 (Addendum)\Civil\Yard Piping 1.dwg Dec 02,2011 - 8:13am woodsw

COLOR TABLE:

ORIGINAL SCALE IN INCHES FOR REDUCED PLANS
0 1 2 3

MATCHLINE A-A (SEE SHEET C-300)

PROPERTY LINE

PROPOSED REHAB OF EXISTING WAS PUMP STATION SEE SHEETS M-101 & M-102

PROP. 14"-45° BEND (SEE NOTE 2)

PROP. 14"-45° BEND (SEE NOTE 2)

PROP. 14"-45° BEND (SEE NOTE 2)

PROP. 14"-45° BEND (SEE NOTE 2)

REMOVE & REPLACE EXIST. FENCE AS REQ'D FOR WAS LINE CONSTRUCTION

PROP. 14"-90° BEND (SEE NOTES 2 & 3)

12"x4" TS&V FOR PROP. 4" NPW

14" WAS

AREA 3A

AREA 4

ZONE "AE"

ZONE "X" SHADED

ZONE "X" UNSHADED

ZONE "X"

APPROXIMATE FLOODPLAIN LINE

18" PLANT DR

PROPOSED MH #5
N: 13,795,390.21
E: 3,109,572.46
(SE) 12" FL 36.10
(W) 18" FL 36.09

HEADWORKS BUILDING

N: 13,795,261.63

E: 3,109,705.86

8" TWAS
6" DRAIN

EXIST. STORAGE SHED

PROP. 8"-45° BEND (SEE NOTE 2)

8" TWAS CONNECTION SEE DETAIL 1/—

REFER TO AREA PLAN SHEET C-401 & C-402 FOR DETAIL

0 30 60
SCALE 1"=30'

NOTES:

1. EXISTING UNDERGROUND PIPING AND UTILITY LOCATIONS TO BE FIELD VERIFIED PRIOR TO CONSTRUCTION.
2. PROVIDE RESTRAINED JOINTS OR THRUST BLOCKS.
3. COORDINATE LOCATION OF 90° BEND WITH PROPOSED SCREENING FACILITY, DWG. M-200.

VERTICAL CONTROL:
ELEVATIONS ARE BASED ON A LINE LEVEL LOOP FROM TROPICAL STORM ALLISON RECOVERY PROJECT REFERENCE MARKER 030085. WITH A PUBLISHED ELEVATION OF 44.50'. (NAVD88, 2001 ADJUSTMENT). ALUMINUM ROD STAMPED 030085 LOCATED AT ALMEDA ROAD AND MOWERY ROAD.

HORIZONTAL CONTROL:
1) HORIZONTAL CONTROL IS BASED ON RTK GPS OBSERVATIONS HOLDING TSARP MONUMENTS 030430, 030095, 030090, AND 030085. ALL COORDINATES ARE RELATED TO TEXAS STATE PLANE COORDINATE SYSTEM NAD 83, SOUTH CENTRAL ZONE. COORDINATES ARE SURFACE USING A SURFACE ADJUSTMENT FACTOR OF 1.00012183.

RECORD DRAWING

THE CONSTRUCTION CONTRACTOR RECORDED CHANGES MADE DURING CONSTRUCTION ON PRINTS OF THE CONTRACT DRAWINGS.

KLOTZ ASSOCIATES, INC. HAS CREATED THIS RECORD DRAWING BY POSTING THE INFORMATION SUBMITTED BY THE CONTRACTOR ON THE ORIGINALS OF THE CONTRACT DRAWINGS. ATTESTED BY:

SIGNATURE: _____
NAME: RALPH E. COX, P.E.
DATE: 12/02/11

1

PROP TWAS LINE FROM NEW TWAS PUMP STATION

EXIST DISCHARGE HEADER

EXIST 8"-90° BEND

PROP 8"x8"x8" WYE

EXIST TWAS PUMP STATION

DETAIL 1/—
SCALE: 1/2"=1'-0"
(SEE SHT H-1)

1

No.	Date	Revisions	App.
1	DEC 2, 2011	RECORD DRAWINGS	REC

STATE OF TEXAS
RALPH E. COX
61028
REGISTERED PROFESSIONAL ENGINEER
2/11/08

klotz associates

Binkley & Barfield
consulting engineers
1710 Seamist Drive
Houston, Texas 77008-3189
(713) 869-3433

SURVEYED BY: GEOSOLUTIONS | FIELD BOOK NO. : N/A

CITY OF HOUSTON
DEPARTMENT OF PUBLIC WORKS AND ENGINEERING

ALMEDA SIMS WWTP & SPF IMPROVEMENTS PACKAGE I

YARD PIPING PLAN (SHEET 2)

FILE NO:	WW4903
WBS:	000298-0004-4
DRAWING SCALE	AS SHOWN
CITY OF HOUSTON PM	IRAJ RANJBAR, P.E.
DWG NO. :	C-301
SHEET NO.	9 OF 109

PUBLIC WORKS AND ENGINEERING
ACCEPTED & FILED
44488
CITY DRAWING NUMBER
HOUSTON, TEXAS

J:\0620.002.000\07.00 CADD\Package 1\Civil\Area Plan - TSHT BB.dwg Feb 11,2008 - 8:20am lewiss

COLOR TABLE:

ORIGINAL SCALE IN INCHES FOR REDUCED PLANS

0 1 2 3

74' EXISTING MITIGATION AREA TO BE FILLED

RAISE EXIST. CO & RIM TO MATCH FINAL GRADE

EXISTING FLOOD PLAIN MITIGATION AREA

EXISTING FENCE

59' EXISTING MITIGATION AREA TO BE FILLED

51.71 48.30 48.30 48.30

PROP. MH #2
RIM 48.50
N: 13,795,644.75
E: 3,108,867.22
FL. 15" SW 41.03
FL. 6" S 46.72
FL. 15" E 41.03

2" SCH. 40 PVC CONDENSATE DR LINE FROM A/C UNIT

50.00 48.40 48.50

N: 13,795,622.60
E: 3,108,888.20

15" PLANT DR

PROP. MH #1
RIM 49.60
N: 13,795,621.36
E: 3,108,833.22
FL. 15" NE 40.95
FL. 15" S 40.95
FL. 6" N 36.95

52.00 6" PVC SCH. 40 FLOOR DRAIN

15" PLANT DR (SEE NOTE 4)

SEE DWG. M-700 FOR CONTINUATION

52.20 52.20

52.70 52.70

1/2" NPW

PROPOSED PAD MOUNT TRANSFORMERS. SEE SHEETS E-400 & E-500

PROPOSED BLOWER BUILDING. SEE SHEET M-700

51.31

EXISTING MANHOLE
FL 15" N 36.83
FL 15" W 36.50
SEE NOTE 2

1 CONNECTION DETAIL

50.86 50.71

15.0'

6" DR 8" TS 51.74

8" TS FM

PROP. PAVEMENT LIMIT
N: 13,795,553.12
E: 3,108,895.27
EL. 51.74

3 SEE DETAIL C-605 (TYP.)

30.0'

49.70 49.75 49.75

R=150' (TYP.)

50.11

PROP. PAVEMENT LIMIT
N: 13,795,531.00
E: 3,108,896.54
EL. 50.00

EXIST LIGHTPOLE W/ DUCTBANK (TYP.)

3"x3"x1/2" PVC TEE

49.00

5 HOSE BIBB D-109 SEE DETAIL

PROPOSED SLUDGE TRANSFER PUMP STATION. SEE SHEET M-600

1 4' SIDEWALK C-604 SEE DETAIL

48.00

12"x3" TS&V

3" NPW

12"X6" TS&V

8"x8" PV

8"x8" TEE

12" NPW

8" TWAS

N: 13,795,625.38
E: 3,108,974.46

49.50 DRAINAGE DIVIDE

APPROX BORE LOCATION B-3 Elev.=48.5'

APPROX BORE LOCATION B-4 Elev.=48.5'

APPROX BORE LOCATION B-5 Elev.=48.5'

PROPOSED SLUDGE HOLDING TANK. SEE SHEETS M-500, M-501 AND S-400, S-401

49.00

48.00

PROPOSED SLUDGE METERING STATION. SEE SHEETS M-501 AND S-401

"E" Inlet
Top=46.61'
Unable to open
West opening FL=36.61'
East opening FL=36.50'

"E" Inlet
Top=46.30'
Unable to open
West opening FL=36.30'
East opening FL=37.80'

FF FF FF FF FF FF

PROPERTY LINE

8" Oak

POINT 9

BC=50.15'
G=49.70'

BC=50.22'
G=49.71'

BC=50.25'
G=49.76'

1.5'x3'Grate Inlet
Top=49.74'
10"PVC (S)

NOTES:

1. EXISTING UNDERGROUND PIPING AND UTILITY LOCATIONS TO BE FIELD VERIFIED PRIOR TO CONSTRUCTION.
2. CORE DRILL EXISTING MANHOLE TO INSTALL 15" PLANT DRAIN.
3. CONTRACTOR SHALL HYDROMULCH SEED ALL AREAS DISTRIBUTED BY CONSTRUCTION. (NO SEPARATE PAY).
4. PROVIDE TEMP. BY-PASS PUMPING TO MAINTAIN EXIST. 6" SAN DURING INSTALLATION OF 15" PLANT DR.

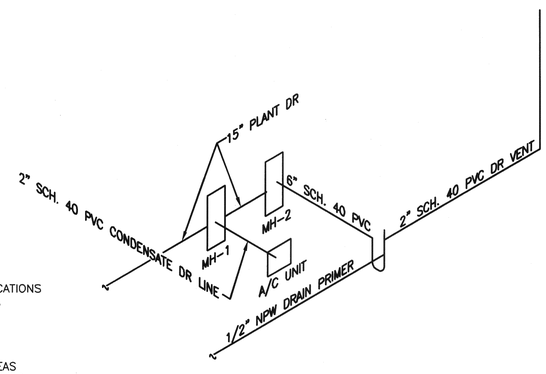

BLOWER BUILDING DRAIN RISER DIAGRAM

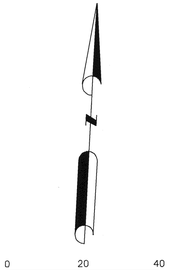

LEGEND

- FF — FILTER FABRIC FENCE
- +49.1' — EXISTING SPOT ELEVATION
- 52.21 — PROPOSED SPOT ELEVATION
- OVERLAND FLOW

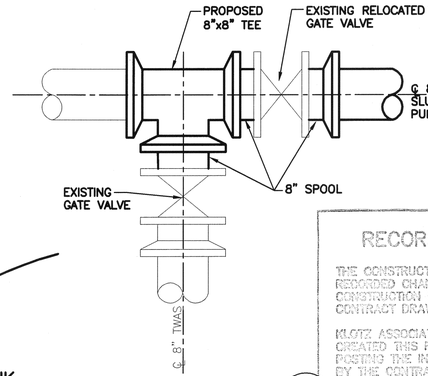

CONNECTION DETAIL 1
N.T.S.

VERTICAL CONTROL:
ELEVATIONS ARE BASED ON A LINE LEVEL LOOP FROM TROPICAL STORM ALLISON RECOVERY PROJECT REFERENCE MARKER 030085, WITH A PUBLISHED ELEVATION OF 44.50'. (NAVD88, 2001 ADJUSTMENT).
ALUMINUM ROD STAMPED 030085 LOCATED AT ALMEDA ROAD AND MOWERY ROAD.

HORIZONTAL CONTROL:
1) HORIZONTAL CONTROL IS BASED ON RTK GPS OBSERVATIONS HOLDING TSARP MONUMENTS 030430, 030095, 030090, AND 030085. ALL COORDINATES ARE RELATED TO TEXAS STATE PLANE COORDINATE SYSTEM NAD 83, SOUTH CENTRAL ZONE. COORDINATES ARE SURFACE ~~USING~~ A SURFACE ADJUSTMENT FACTOR OF 1.00012183.

RECORD DRAWING

THE CONSTRUCTION CONTRACTOR RECORDED CHANGES MADE DURING CONSTRUCTION ON PRINTS OF THE CONTRACT DRAWINGS.

KLOTZ ASSOCIATES, INC. HAS CREATED THIS RECORD DRAWING BY PLOTTING THE INFORMATION SUBMITTED BY THE CONTRACTOR ON THE ORIGINALS OF THE CONTRACT DRAWINGS. ATTESTED BY:

SIGNATURE:
NAME: RALPH E. COX, P.E.
DATE: 12/02/11

FILL IN FLOODPLAIN CALCULATIONS

THE FOLLOWING CALCULATIONS ARE BASED ON A LINE LOOP FROM TROPICAL STORM ALLISON RECOVERY PROJECT REFERNECE MARKER 030085 WITH PUBLISHED ELEVATION OF 44.50' (NAVD88, 2001 ADJUSTMENT)

FILL FLOODPLAIN:		
SURFACE AREA:	20,422	SF
VOLUME:	2,181	CY
AVERAGE 100 YR WSE:	48.91	
AVERAGE NATURAL GROUND EL:	48.06	
CUT IN FLOODPLAIN:		
SURFACE AREA:	34,602	SF
VOLUME:	5,524	CY
AVERAGE 100 YR WSE:	48.91	
AVERAGE NATURAL GROUND EL:	48.06	
AVERAGE PROPOSED GRADE:	50.40	

No.	Date	Revisions	App.

STATE OF TEXAS
RALPH E. COX
61026
REGISTERED PROFESSIONAL ENGINEER
2/4/08

klotz associates

Binkley & Barfield consulting engineers
1710 Seamist Drive
Houston, Texas 77008-3189
(713) 869-3433

SURVEYED BY: GEOSOLUTIONS FIELD BOOK NO. : N/A

CITY OF HOUSTON
DEPARTMENT OF PUBLIC WORKS AND ENGINEERING

ALMEDA SIMS WWTP & SPF IMPROVEMENTS PACKAGE I

BLOWER BUILDING SLUDGE HOLDING TANK AREA PLAN

FILE NO:	WW4903
WBS:	000298-0004-4
DRAWING SCALE	AS SHOWN
CITY OF HOUSTON PM	IRAJ RANJBAR, P.E.
DWG NO. :	C-400
SHEET NO.	10 OF 109

PUBLIC WORKS AND ENGINEERING
ACCEPTED & FILED
444188
CITY DRAWING NUMBER
HOUSTON, TEXAS

J:\0620.002.000\07.00 CADD\Package 1\Civil\Area Plan DEMO - Thickner.dwg Feb 08,2008 - 8:31am lewiss

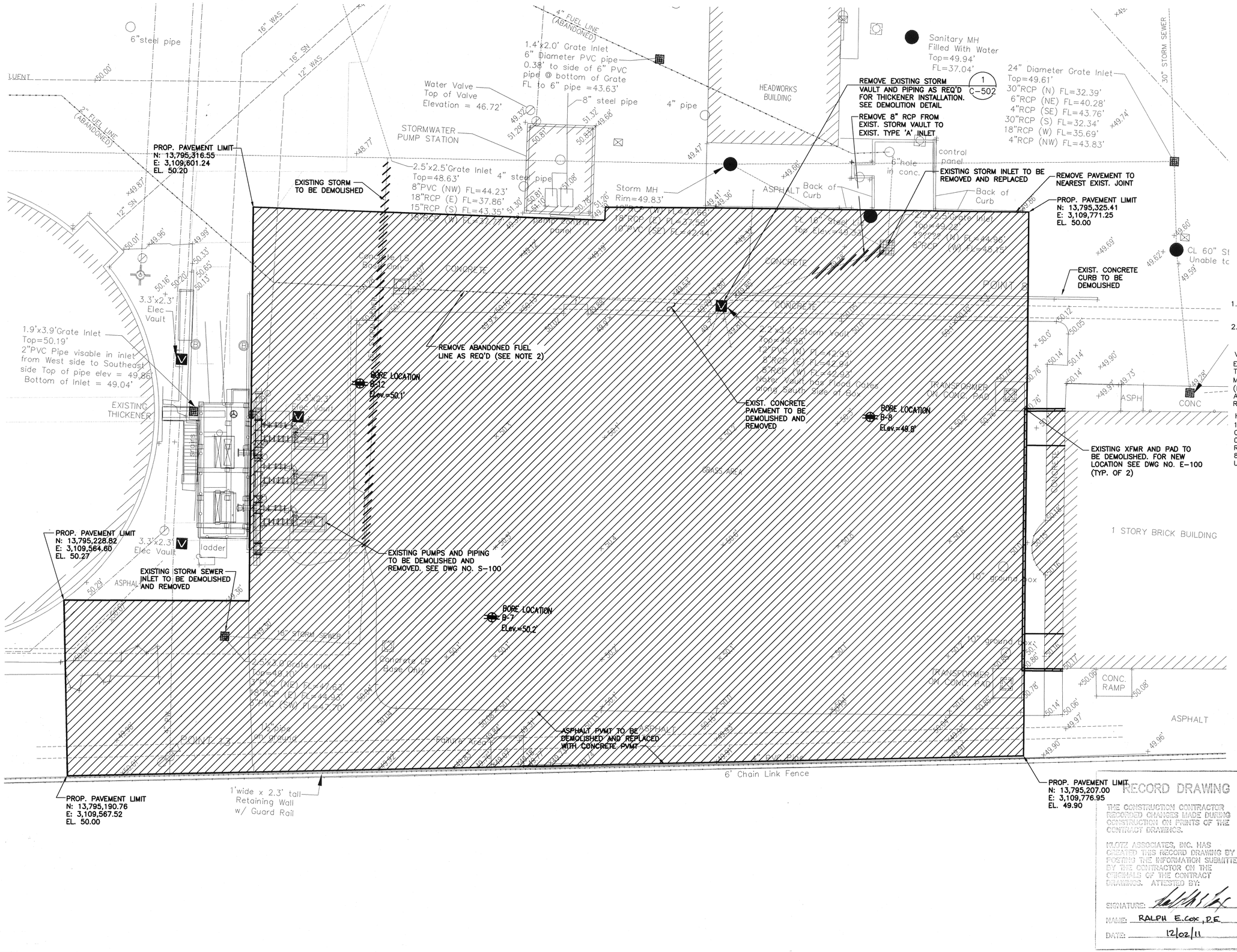

0 10 20
SCALE 1"=10'

LEGEND

DEMOLITION

EXISTING SPOT ELEVATION

NOTES:

1. EXISTING UNDERGROUND PIPING AND UTILITY LOCATIONS TO BE FIELD VERIFIED PRIOR TO CONSTRUCTION.
2. EXISTING ABANDONED FUEL LINE WAS NEVER PLACED IN SERVICE. HOWEVER, FIELD VERIFY BEFORE REMOVAL.

VERTICAL CONTROL:

ELEVATIONS ARE BASED ON A LINE LEVEL LOOP FROM TROPICAL STORM ALLISON RECOVERY PROJECT REFERENCE MARKER 030085. WITH A PUBLISHED ELEVATION OF 44.50'. (NAVD88, 2001 ADJUSTMENT). ALUMINUM ROD STAMPED 030085 LOCATED AT ALMEDA ROAD AND MOWERY ROAD.

HORIZONTAL CONTROL:

1) HORIZONTAL CONTROL IS BASED ON RTK GPS OBSERVATIONS HOLDING TSARP MONUMENTS 030430, 030095, 030090, AND 030085. ALL COORDINATES ARE RELATED TO TEXAS STATE PLANE COORDINATE SYSTEM NAD 83, SOUTH CENTRAL ZONE. COORDINATES ARE SURFACE USING A SURFACE ADJUSTMENT FACTOR OF 1.00012183.

No.	Date	Revisions	App.

STATE OF TEXAS
RALPH E. COX
61026
REGISTERED PROFESSIONAL ENGINEER
2/11/08

klotz associates

Binkley & Barfield
consulting engineers
1710 Seamist Drive
Houston, Texas 77008-3189
(713) 869-3433

SURVEYED BY: GEOSOLUTIONS | FIELD BOOK NO. : N/A

CITY OF HOUSTON
DEPARTMENT OF PUBLIC WORKS AND ENGINEERING

ALMEDA SIMS WWTP & SPF IMPROVEMENTS PACKAGE I

GRAVITY THICKENER AREA PLAN DEMOLITION

RECORD DRAWING

THE CONSTRUCTION CONTRACTOR RECORDED CHANGES MADE DURING CONSTRUCTION ON PRINTS OF THE CONTRACT DRAWINGS.

KLOTZ ASSOCIATES, INC. HAS CREATED THIS RECORD DRAWING BY POSTING THE INFORMATION SUBMITTED BY THE CONTRACTOR ON THE ORIGINALS OF THE CONTRACT DRAWINGS. ATTESTED BY:

SIGNATURE:
NAME: RALPH E.COX, P.E.
DATE: 12/02/11

FILE NO:	WW4903
WBS:	000298-0004-4
DRAWING SCALE	AS SHOWN
CITY OF HOUSTON PM	IRAJ RANJBAR, P.E.
DWG NO. :	C-401
SHEET NO.	11 OF 109

PUBLIC WORKS AND ENGINEERING
ACCEPTED & FILED
44483-1
CITY DRAWING NUMBER
HOUSTON, TEXAS

COLOR TABLE:

ORIGINAL SCALE IN INCHES FOR REDUCED PLANS
0 1 2 3

J:\0620.002.000\07.00 CADD\Package 1 (Addendum)\Civil\Area Plan - Thickner.dwg Dec 02,2011 - 8:11am woodsl

COLOR TABLE:

ORIGINAL SCALE IN INCHES FOR REDUCED PLANS

0 1 2 3

12" DR SEE SHEET C-301 FOR CONTINUATION
6"steel pipe CRITICAL LOCATION
16" SN TO BE PLUGGED
16" WAS
14" WAS SEE SHEET C-301 FOR CONTINUATION
16" SN
12" WAS
16" FILTRATE EFFLUENT
PROP. MH #6
N: 13,795,344.07
E: 3,109,604.11
(SW) 12" FL. 43.56
(W) 16" FL. 43.39
(SE) 12" FL. 36.27
(NW) 12" FL. 36.22
CRITICAL LOCATION
EXISTING STORM INLET TO BE REMOVED AND REPLACED W/ TYPE 'A' GRATE INLET
(SE) 15" RCP
FL. 43.35
PROP. MH #7
N: 13,795,331.90
E: 3,109,616.33
(NW) 12" FL. 36.31
(SE) 12" FL. 36.31
(S) 12" FL. 43.86
CRITICAL LOCATION
2" FUEL LINE (ABANDONED)
PROP. PAVEMENT LIMIT
N: 13,795,316.55
E: 3,109,601.24
EL. 50.20
12" SN
3.3'x2.3' Elec Vault
1.9'x3.9'Grate Inlet
Top=50.19'
2"PVC Pipe visable in inlet from West side to Southeast side Top of pipe elev = 49.86'
Bottom of Inlet = 49.04'
EXISTING THICKENER
Stairs
ladder
PROP. PAVEMENT LIMIT
N: 13,795,228.82
E: 3,109,564.60
EL. 50.27
4" NPW FOR CONT. SEE SHEET M-201
ASPHALT
N: 13,795,223.06
E: 3,109,592.53
6" DR
4" NPW
PROPOSED TWAS PUMP STATION SEE SHEET M-400
2.5'x3.0'Grate Inlet
Top=49.19'
3"PVC (NW) FL=42.23'
18"RCP (E) FL=44.93'
3"PVC (SW) FL=47.70'
1½ pipe
18" STORM SEWER
Concrete LP Base Only
PROP. PAVEMENT LIMIT
N: 13,795,190.76
E: 3,109,567.52
EL. 50.00
8" TWAS FM SEE SHEET C-301 FOR CONTINUATION
1'wide x 2.3' tall Retaining Wall w/ Guard Rail
HOSE BIBB SEE DETAIL 5 D-109
PROPOSED SCREENING FACILITY (PARTIALLY SHOWN FOR CLARITY) SEE SHEET M-201
4" NPW SEE SHEET C-301 FOR CONTINUATION
4" FUEL LINE (ABANDONED)
1.4'x2.0' Grate Inlet
6" Diameter PVC pipe
0.38' to side of 6" PVC
pipe @ bottom of Grate
FL to 6" pipe =43.63'
Water Valve
Top of Valve
Elevation = 46.72'
8" steel pipe
4" pipe
STORMWATER PUMP STATION
2.5'x2.5'Grate Inlet
Top=48.68'
8"PVC (NW) FL=44.23'
18"RCP (E) FL=37.86'
15"RCP (S) FL=43.35'
18"RCP (W) FL=37.77'
4" steel pipe
pump control panel
Storm MH
Rim=49.83'
18"RCP (W) FL=37.66'
18"RCP (E) FL=37.58'
10"PVC (SE) FL=42.44'
HEADWORKS BUILDING
Sanitary MH
Filled With Water
Top=49.94'
FL=37.04'
EXISTING STORM INLET TO BE REMOVED AND REPLACED W/ TYPE 'A' GRATE INLET
24" Diameter Grate Inlet
Top=49.61'
30"RCP (N) FL=32.39'
6"RCP (NE) FL=40.28'
4"RCP (SE) FL=43.76'
30"RCP (S) FL=32.34'
18"RCP (W) FL=35.69'
4"RCP (NW) FL=43.83'
30" STORM SEWER
control panel
6"hole in conc.
ASPHALT
Back of Curb
CL 16" Steel Lid
Top Elev.=49.33'
2.5'x2.5'Grate Inlet
Top=49.22'
?????? (N) FL=44.96'
8"RCP (W) FL=45.15'
PROP. PAVEMENT LIMIT
N: 13,795,325.41
E: 3,109,771.35
EL. 50.00
CL 60" St
Unable to
PROP. MH #8
N: 13,795,306.47
E: 3,109,642.34
(S) 8" FL. 39.15
(SE) 12" FL. 43.54
(NW) 12" FL. 36.40
Concrete LS Base Only
CONCRETE
POINT 8
PROP. PAVEMENT LIMIT
N: 13,795,297.39
E: 3,109,669.50
EL. 50.20
2.2'x3.2' Storm Vault
Top=49.95'
12"PVC (N) FL=42.93'
8"RCP (E) FL=42.94'
8"RCP (W) FL=42.93'
Note: Vault has Flood Gates along South Side of Box
BORE LOCATION B-8 ELev.=49.8'
TRANSFORMER ON CONC. PAD
ASPH
CONC
14" FABRICATED FITTING
BORE LOCATION B-2 ELev.=50.1'
4"x3" TEE
N: 13,795,266.47
E: 3,109,641.51
RIM=49.75
PROPOSED TYPE 'A' GRATE INLET
(NW) 15" FL. 43.54
(S) 15" FL. 43.55
PROPOSED GRAVITY THICKENER SEE SHEET M-300
N: 13,795,261.63
PROP. PAVMENT EDGE EL. 50.70
PROP. PAVEMENT LIMIT GRADE BREAK EL. 50.25
PROP. CONC. WALKWAY
1 STORY BRICK BUILDING
PROP. MH #9
N: 13,795,236.08
E: 3,109,646.03
(S) 6" FL. 45.18
(SE) 8" FL. 39.46
(N) 8" FL. 39.44
4"x4" TEE
8" TWAS
BORE LOCATION B-7 ELev.=50.2'
PROP. MH #10
N: 13,795,220.95
E: 3,109,662.84
(NW) 8" FL. 39.46
(SE) 8" FL. 39.46
8"x8" TEE
E: 3,109,705.86
10" ground box
6" CURB SEE DETAIL DWG. NO. C-603
PREMOLDED EXPANSION JOINT ADJACENT TO BUILDING AND TRANSFORMER PAD (TYP.)
TRANSFORMER ON CONC. PAD
CONC. RAMP
ASPHALT
Failure Area
4" PVC Pipe
6' Chain Link Fence
EXISTING 8" NPW
8" PLUG VALVE IN MH SEE DETAIL 4 C-602
N: 13,795,198.49
E: 3,109,645.49
RIM=49.80
PROPOSED TYPE 'A' GRATE INLET
(N) 15" EL. 43.74
(E) 12" FL. 43.77
PROPOSED 12"x18" DUCTBANK
EXISTING 30"x30" DUCTBANK
N: 13,795,207.73
E: 3,109,765.71
RIM=49.75
PROPOSED TYPE 'A' GRATE INLET
(W) 12" FL. 44.28
PROP. PAVEMENT LIMIT
N: 13,795,207.00
E: 3,109,776.95
EL. 49.90

0 10 20
SCALE 1"=10'

LEGEND

+49.1' EXISTING SPOT ELEVATION

NOTE:

1. EXISTING UNDERGROUND PIPING AND UTILITY LOCATIONS TO BE FIELD VERIFIED PRIOR TO CONSTRUCTION.
2. ALL PROPOSED CONCRETE PAVEMENT SHALL BE 8-INCH REINFORCED CONCRETE PAVMENT. SEE DETAIL 2, DWG. NO. C-604.

VERTICAL CONTROL:
ELEVATIONS ARE BASED ON A LINE LEVEL LOOP FROM TROPICAL STORM ALLISON RECOVERY PROJECT REFERENCE MARKER 030085. WITH A PUBLISHED ELEVATION OF 44.50'. (NAVD88, 2001 ADJUSTMENT).
ALUMINUM ROD STAMPED 030085 LOCATED AT ALMEDA ROAD AND MOWERY ROAD.

HORIZONTAL CONTROL:
1) HORIZONTAL CONTROL IS BASED ON RTK GPS OBSERVATIONS HOLDING TSARP MONUMENTS 030430, 030095, 030090, AND 030085. ALL COORDINATES ARE RELATED TO TEXAS STATE PLANE COORDINATE SYSTEM NAD 83, SOUTH CENTRAL ZONE. COORDINATES ARE SURFACE USING A SURFACE ADJUSTMENT FACTOR OF 1.00012183.

No.	Date	Revisions	App.
1	DEC 2, 2011	RECORD DRAWINGS	REC

RALPH E. COX 61028 REGISTERED PROFESSIONAL ENGINEER STATE OF TEXAS
2/11/08

klotz associates

Binkley & Barfield consulting engineers
1710 Seamist Drive
Houston, Texas 77008-3189
(713) 869-3433

SURVEYED BY: GEOSOLUTIONS | FIELD BOOK NO. : N/A

CITY OF HOUSTON
DEPARTMENT OF PUBLIC WORKS AND ENGINEERING

ALMEDA SIMS WWTP & SPF IMPROVEMENTS PACKAGE I

GRAVITY THICKENER AREA PLAN

RECORD DRAWING

THE CONSTRUCTION CONTRACTOR RECORDED CHANGES MADE DURING CONSTRUCTION ON PRINTS OF THE CONTRACT DRAWINGS.

KLOTZ ASSOCIATES, INC. HAS CREATED THIS RECORD DRAWING BY POSTING THE INFORMATION SUBMITTED BY THE CONTRACTOR ON THE ORIGINALS OF THE CONTRACT DRAWINGS. ATTESTED BY:

SIGNATURE: _____
NAME: RALPH E. COX, P.E.
DATE: 12/02/11

FILE NO:	WW4903
WBS:	000298-0004-4
DRAWING SCALE	AS SHOWN
CITY OF HOUSTON PM	IRAJ RANJBAR, P.E.
DWG NO. :	C-402
SHEET NO.	12 OF 109

PUBLIC WORKS AND ENGINEERING ACCEPTED & FILED 44488 CITY DRAWING NUMBER HOUSTON, TEXAS

J:\0620.002.000\07.00 CADD\Package 1\Civil\Piping X-Sections.dwg Feb 11,2008 - 8:13am lewiss

NOTE:

1. EXISTING LINES SHOWN ARE PLOTTED FROM RECORD DRAWINGS. CONTRACTOR SHALL FIELD VERIFY LOCATIONS AND DEPTHS.

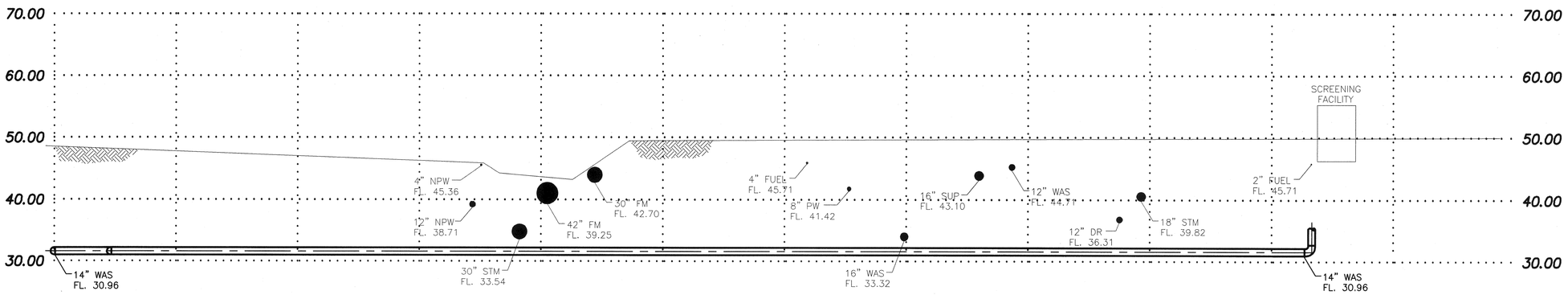

PROPOSED 14" WAS CROSS SECTION

SCALE: H: 1"=10'
V: 1"=10'

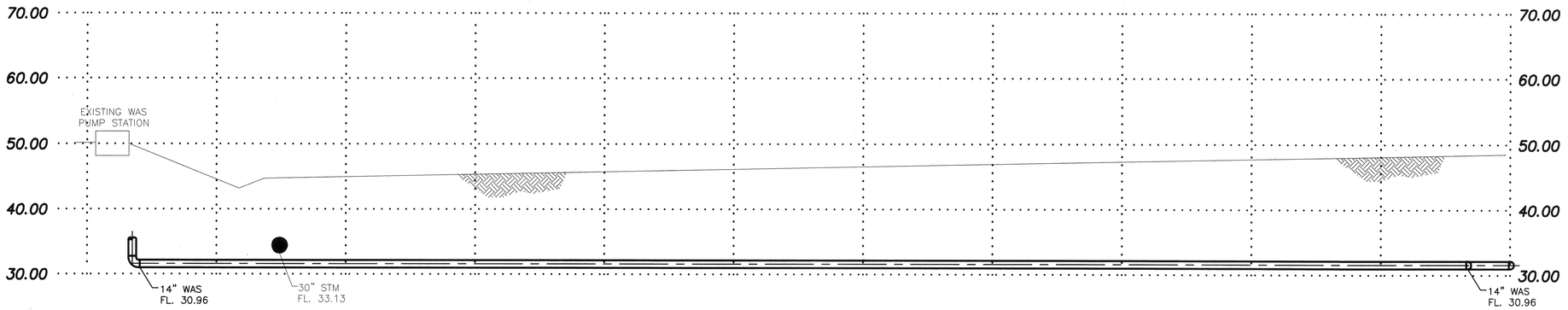

PROPOSED 14" WAS CROSS SECTION

SCALE: H: 1"=10'
V: 1"=10'

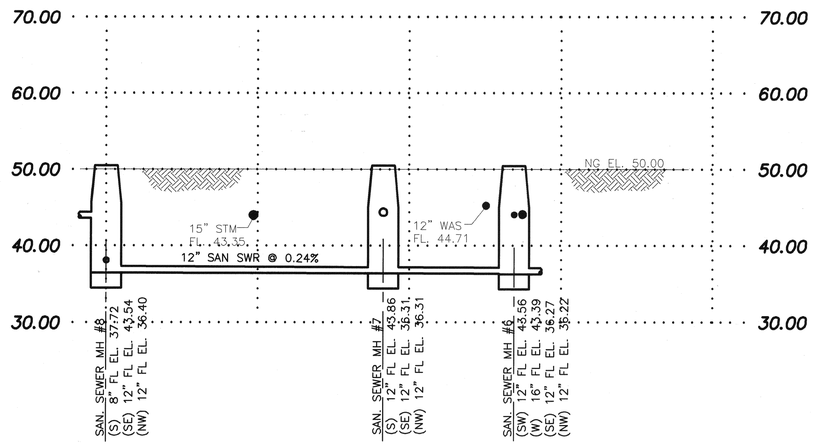

PROPOSED 12" DR CROSS SECTION

SCALE: H: 1"=10'
V: 1"=10'

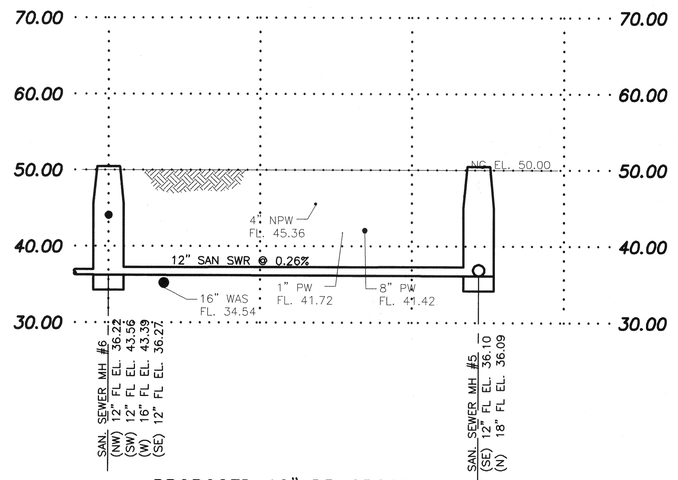

PROPOSED 12" DR CROSS SECTION

SCALE: H: 1"=10'
V: 1"=10'

RECORD DRAWING

THE CONSTRUCTION CONTRACTOR RECORDED CHANGES MADE DURING CONSTRUCTION ON PRINTS OF THE CONTRACT DRAWINGS.

KLOTZ ASSOCIATES, INC. HAS CREATED THIS RECORD DRAWING BY POSTING THE INFORMATION SUBMITTED BY THE CONTRACTOR ON THE ORIGINALS OF THE CONTRACT DRAWINGS. ATTESTED BY:

SIGNATURE: Ralph E. Cox

NAME: RALPH E. COX P.E.

DATE: 12/02/11

No.	Date	Revisions	App.

2/11/08

STATE OF TEXAS
RALPH E. COX
61026
REGISTERED PROFESSIONAL ENGINEER

klotz associates

Binkley & Barfield
consulting engineers
1710 Seamist Drive
Houston, Texas 77008-3189
(713) 869-3433

SURVEYED BY: GEOSOLUTIONS | FIELD BOOK NO. : N/A

CITY OF HOUSTON
DEPARTMENT OF PUBLIC WORKS AND ENGINEERING

ALMEDA SIMS WWTP & SPF IMPROVEMENTS PACKAGE I

YARD PIPING CROSS SECTIONS (SHEET 1)

FILE NO:	WW4903
WBS:	000298-0004-4
DRAWING SCALE	AS SHOWN
CITY OF HOUSTON PM	IRAJ RANJBAR, P.E.
DWG NO. :	C-500
SHEET NO.	13 OF 109

ACCEPTED & FILED
PUBLIC WORKS AND ENGINEERING
44488
CITY DRAWING NUMBER
HOUSTON, TEXAS

COLOR TABLE:

ORIGINAL SCALE IN INCHES FOR REDUCED PLANS
0 1 2 3

J:\0620.002.000\07.00 CADD\Package 1 (Addendum)\Civil\Piping X-Sections.dwg Dec 02,2011 - 8:14am woodsw

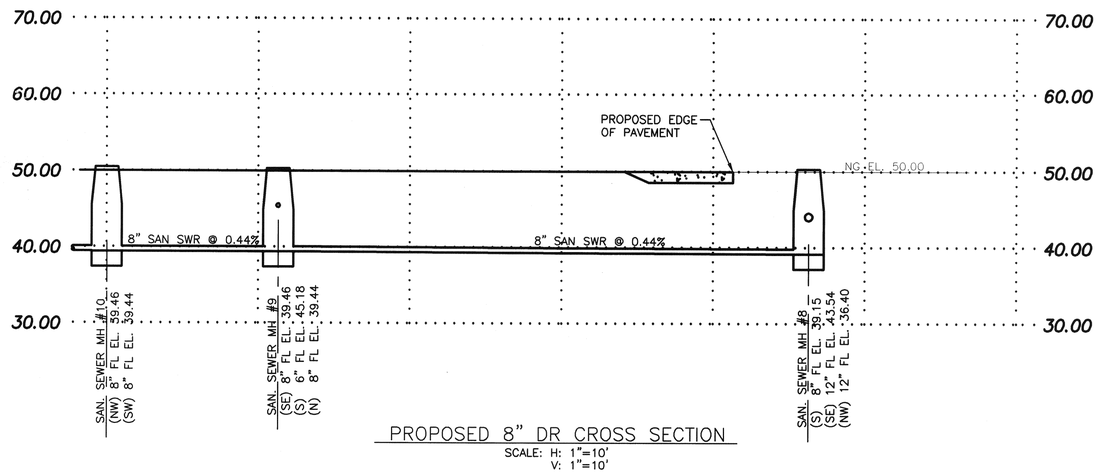

PROPOSED 8" DR CROSS SECTION

SCALE: H: 1"=10'
V: 1"=10'

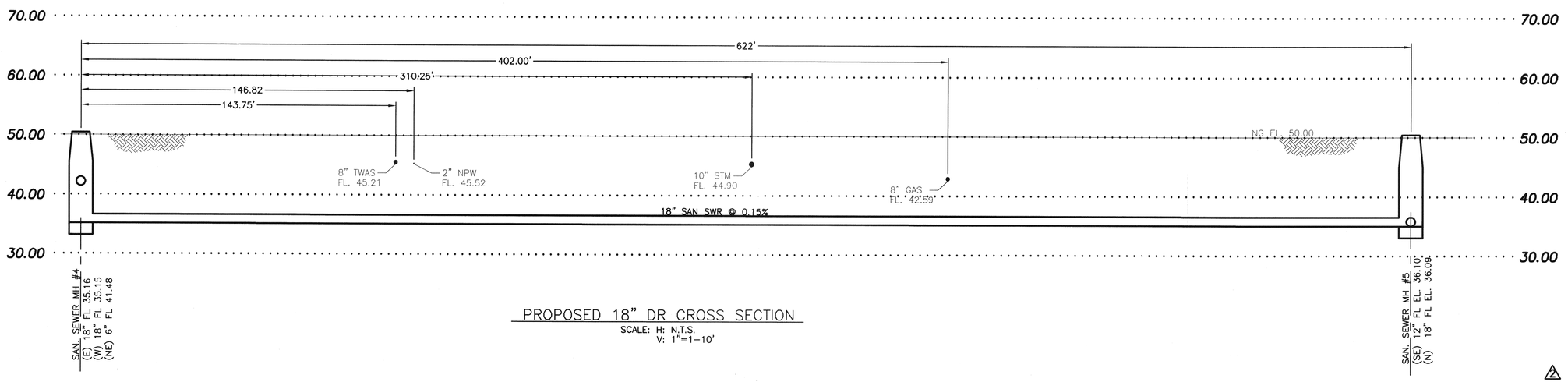

PROPOSED 18" DR CROSS SECTION

SCALE: H: N.T.S.
V: 1"=1-10'

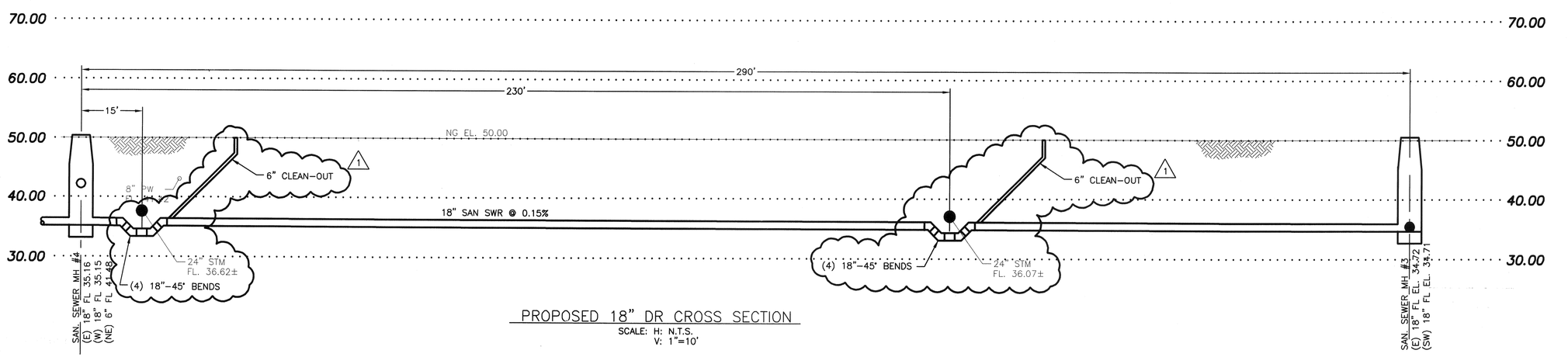

PROPOSED 18" DR CROSS SECTION

SCALE: H: N.T.S.
V: 1"=10'

NOTE:

1. EXISTING LINES SHOWN ARE PLOTTED FROM RECORD DRAWINGS. CONTRACTOR SHALL FIELD VERIFY LOCATIONS AND DEPTHS.

RECORD DRAWING

THE CONSTRUCTION CONTRACTOR RECORDED CHANGES MADE DURING CONSTRUCTION ON PRINTS OF THE CONTRACT DRAWINGS.

KLOTZ ASSOCIATES, INC. HAS CREATED THIS RECORD DRAWING BY POSTING THE INFORMATION SUBMITTED BY THE CONTRACTOR ON THE ORIGINALS OF THE CONTRACT DRAWINGS. ATTESTED BY:

SIGNATURE:

NAME: RALPH E. COX, P.E.

DATE: 12/02/11

No.	Date	Revisions	App.
1	DEC 2, 2011	RECORD DRAWINGS	REC
2	3/26/08	ADDENDUM NO. 2	

STATE OF TEXAS
JOSEPH D. JOHNSON
39056
REGISTERED
PROFESSIONAL ENGINEER
3/26/08

klotz associates

Binkley & Barfield
consulting engineers
1710 Seamist Drive
Houston, Texas 77008-3189
(713) 869-3433

SURVEYED BY: GEOSOLUTIONS | FIELD BOOK NO. : N/A

CITY OF HOUSTON
DEPARTMENT OF PUBLIC WORKS AND ENGINEERING

ALMEDA SIMS WWTP & SPF IMPROVEMENTS PACKAGE I

YARD PIPING CROSS SECTIONS (SHEET 2)

FILE NO:	WW4903
WBS:	000298-0004-4
DRAWING SCALE	AS SHOWN
CITY OF HOUSTON PM	IRAJ RANJBAR, P.E.
DWG NO. :	C-501
SHEET NO.	14 OF 109

PUBLIC WORKS AND ENGINEERING
ACCEPTED & FILED
44488
CITY DRAWING NUMBER
HOUSTON, TEXAS

COLOR TABLE:

ORIGINAL SCALE IN INCHES FOR REDUCED PLANS
0 1 2 3

J:\0620.002.000\07.00 CADD\Package 1 (Addendum)\Civil\Piping X-Sections.dwg Mar 26,2008 - 10:45am lewiss

COLOR TABLE:

FOR REDUCED PLANS
0 1 2 3

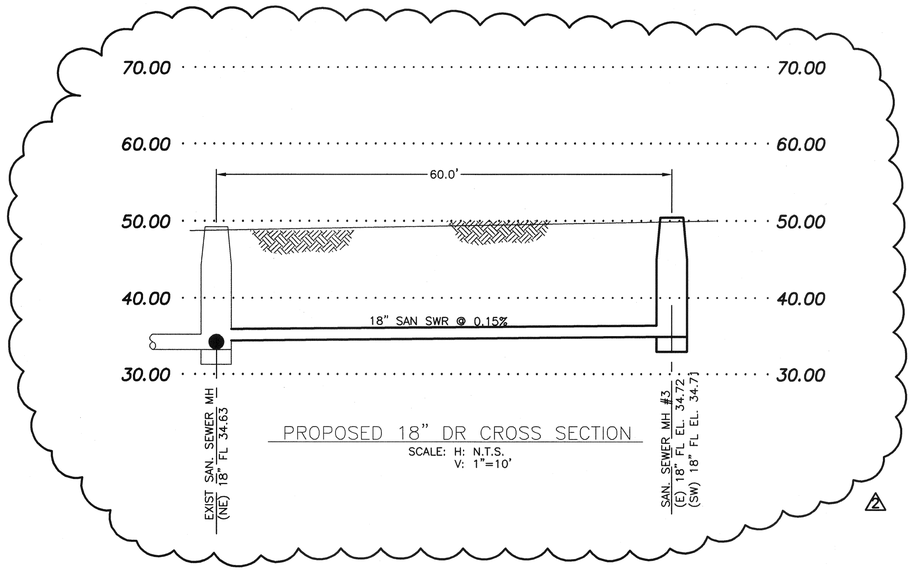

PROPOSED 18" DR CROSS SECTION

SCALE: H: N.T.S.
V: 1"=10'

NOTE:

1. EXISTING LINES SHOWN ARE PLOTTED FROM RECORD DRAWINGS. CONTRACTOR SHALL FIELD VERIFY LOCATIONS AND DEPTHS.

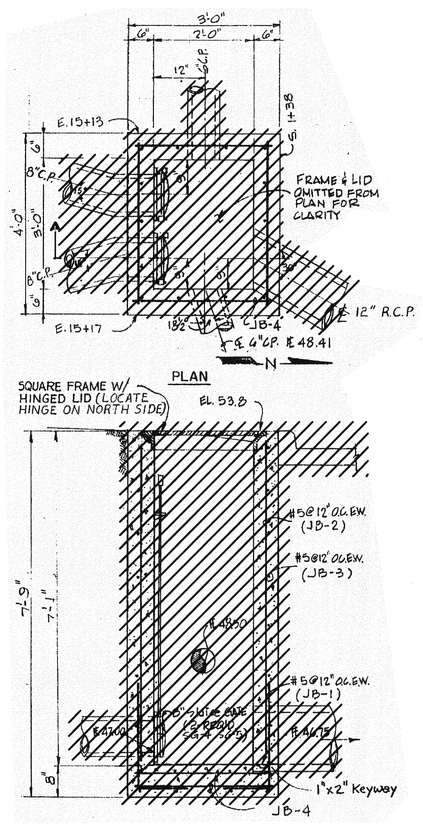

STORM VAULT DEMOLITION 1

N.T.S.
(SEE DWG NO. C-401)

LEGEND

DEMOLITION

RECORD DRAWING

THE CONSTRUCTION CONTRACTOR RECORDED CHANGES MADE DURING CONSTRUCTION ON PRINTS OF THE CONTRACT DRAWINGS.

KLOTZ ASSOCIATES, INC. HAS CREATED THIS RECORD DRAWING BY POSTING THE INFORMATION SUBMITTED BY THE CONTRACTOR ON THE ORIGINALS OF THE CONTRACT DRAWINGS. ATTESTED BY:

SIGNATURE:

NAME: RALPH E. COX, P.E.

DATE: 12/02/11

No.	Date	Revisions	App.
2	3/26/08	ADDENDUM NO. 2	

STATE OF TEXAS
ROBERT A. JOHNSON
39656
REGISTERED
PROFESSIONAL ENGINEER
3/26/08

klotz associates

Binkley & Barfield
consulting engineers
1710 Seamist Drive
Houston, Texas 77008-3189
(713) 869-3433

SURVEYED BY: GEOSOLUTIONS | FIELD BOOK NO. : N/A

CITY OF HOUSTON
DEPARTMENT OF PUBLIC WORKS AND ENGINEERING

ALMEDA SIMS WWTP & SPF IMPROVEMENTS PACKAGE I

YARD PIPING CROSS SECTIONS (SHEET 3)

FILE NO:	WW4903
WBS:	000298-0004-4
DRAWING SCALE	AS SHOWN
CITY OF HOUSTON PM	IRAJ RANJBAR, P.E.
DWG NO. :	C-502
SHEET NO.	15 OF 109

PUBLIC WORKS AND ENGINEERING
ACCEPTED & FILED
44488
CITY DRAWING NUMBER
HOUSTON, TEXAS

J:\0620.002.000\07.00 CADD\Package 1\Standard Details\Civil Details.dwg Feb 08,2008 - 8:33am ramirezm

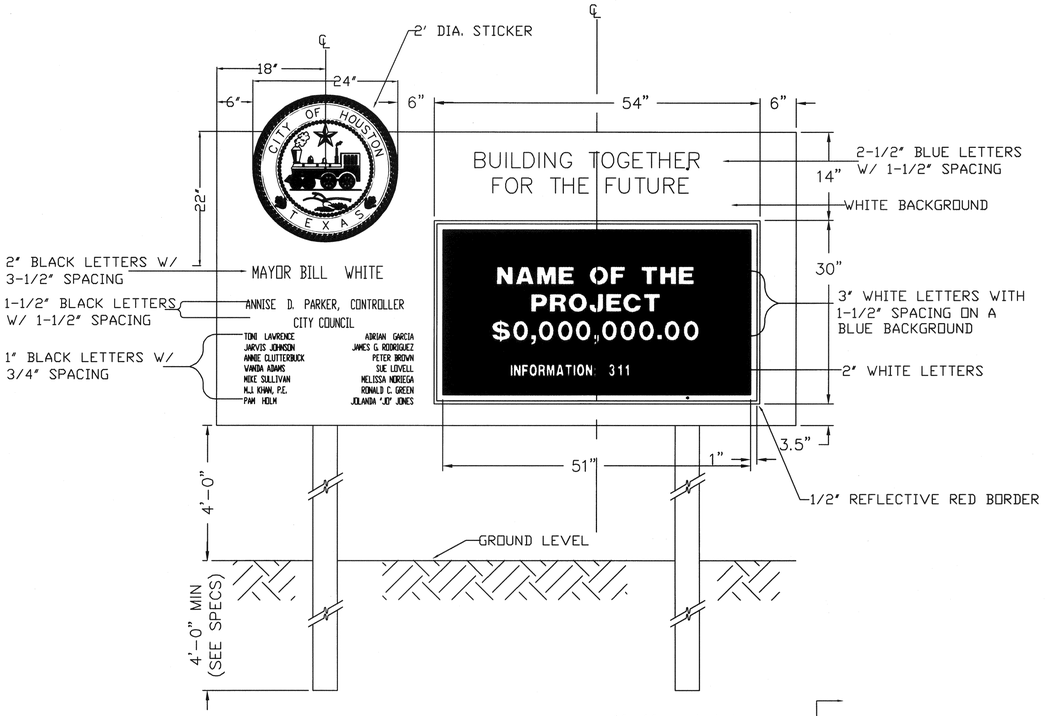

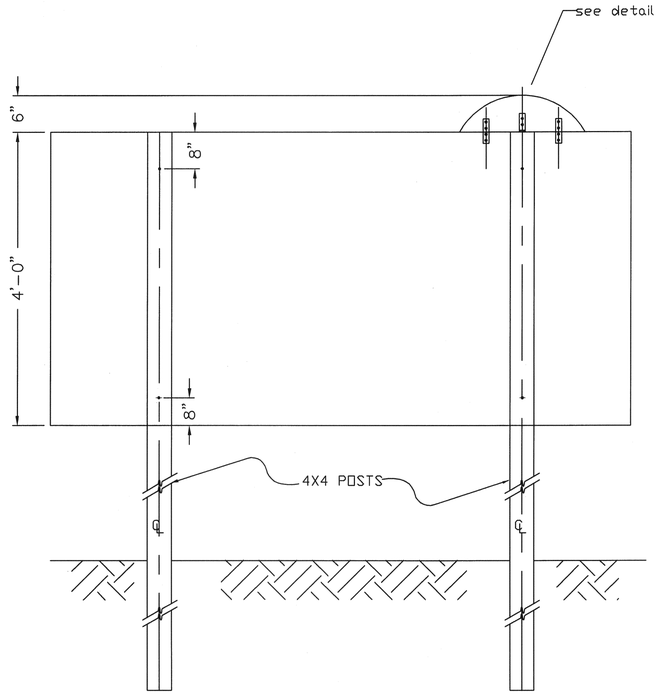

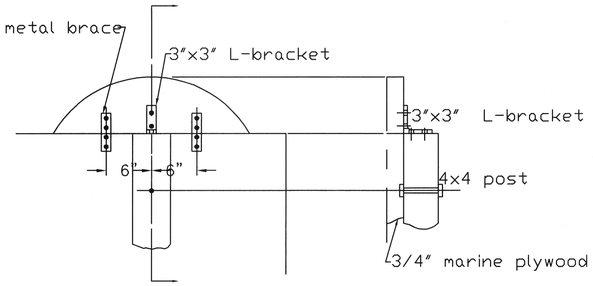

FRONT VIEW

BACK VIEW

DETAIL

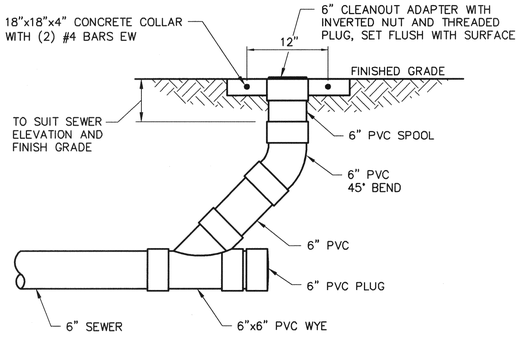

SEWER CLEANOUT (CO)

DETAIL 1 / N.T.S.

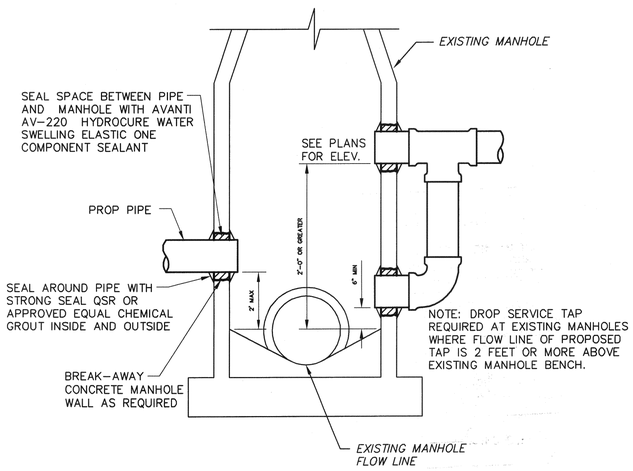

MANHOLE TAP

DETAIL 2 / N.T.S.

RECORD DRAWING

THE CONSTRUCTION CONTRACTOR RECORDED CHANGES MADE DURING CONSTRUCTION ON PRINTS OF THE CONTRACT DRAWINGS.

KLOTZ ASSOCIATES, INC. HAS CREATED THIS RECORD DRAWING BY POSTING THE INFORMATION SUBMITTED BY THE CONTRACTOR ON THE ORIGINALS OF THE CONTRACT DRAWINGS. ATTESTED BY:

SIGNATURE:

NAME: RALPH E. Cox, P.E.

DATE: 12/22/11

No.	Date	Revisions	App.

STATE OF TEXAS
RALPH E. COX
61026
REGISTERED
PROFESSIONAL ENGINEER
2/11/08

klotz associates

Binkley & Barfield
consulting engineers
1710 Seamist Drive
Houston, Texas 77008-3189
(713) 869-3433

SURVEYED BY: GEOSOLUTIONS | FIELD BOOK NO. : N/A

CITY OF HOUSTON
DEPARTMENT OF PUBLIC WORKS AND ENGINEERING

ALMEDA SIMS WWTP & SPF IMPROVEMENTS PACKAGE I

STANDARD CIVIL DETAILS (SHEET 1)

FILE NO:	WW4903
WBS:	000298-0004-4
DRAWING SCALE	AS SHOWN
CITY OF HOUSTON PM	IRAJ RANJBAR, P.E.
DWG NO. :	C-600
SHEET NO.	16 OF 109

PUBLIC WORKS AND ENGINEERING
ACCEPTED & FILED
44488
CITY DRAWING NUMBER
HOUSTON, TEXAS

COLOR TABLE:

ORIGINAL SCALE IN INCHES FOR REDUCED PLANS
0 1 2 3

J:\0620.002.000\07.00 CADD\Package 1\Standard Details\Civil Details.dwg Feb 11,2008 - 8:15am lewiss

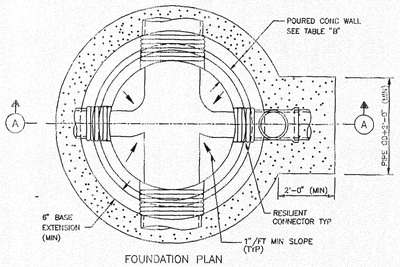

FOUNDATION PLAN

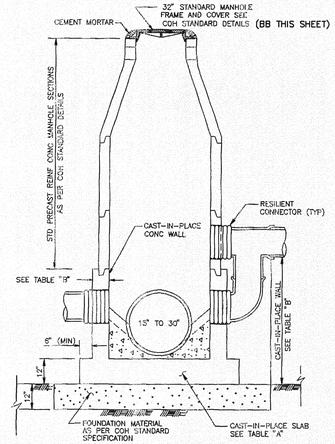

ELEVATION (A)

NOTES:

1. SEAT MANHOLE FRAME IN SEALANT PER COH STANDARD SPECIFICATION.
2. OMIT CEMENT MORTAR WHEN MANHOLE IS LOCATED IN PAVED AREAS.
3. PROVIDE BACKFILL TO MATCH ADJACENT PAVE TRENCH BACKFILL PER COH STANDARD SPECIFICATION.
4. MANHOLE DROP AND INTERSECTING PIPES SHALL BE INSTALLED ONLY WHEN CALLED FOR IN PLAN AND PROFILE DRAWING.

NOTES ON USE OF STANDARD DETAIL

TABLE "A"

BASE SLAB REINFORCING AND THICKNESS			
MH BASE DIA FT	DEPTH TO INV (FT)	BASE THICKNESS	REINFORCING (E. W. T & B)
8	≤ 20	1'-0"	# 6 @ 10"
	≤ 25	1'-2"	# 6 @ 8"
	≤ 30	1'-4"	# 6 @ 7"
	≤ 40	1'-6"	# 6 @ 5"
	≤ 50	1'-8"	# 6 @ 6"
	≤ 60	1'-10"	# 6 @ 5"
6	≤ 15	1'-0"	# 5 @ 5"
	≤ 20	1'-0"	# 5 @ 8"
	≤ 25	1'-2"	# 5 @ 7"
	≤ 30	1'-5"	# 5 @ 6"
	≤ 40	1'-9"	# 6 @ 8"
	≤ 50	1'-11"	# 6 @ 6"
	≤ 60	2'-1"	# 6 @ 7"
5	≤ 15	1'-0"	# 5 @ 6"
	≤ 20	1'-0"	# 5 @ 7"
	≤ 25	1'-3"	# 5 @ 6"
	≤ 30	1'-0"	# 6 @ 10"
	≤ 40	1'-2"	# 6 @ 9"
	≤ 50	1'-4"	# 6 @ 8"
	≤ 60	1'-6"	# 6 @ 8"
4	≤ 20	1'-0"	# 5 @ 8"
	≤ 25	1'-0"	# 5 @ 8"
	≤ 30	1'-0"	# 5 @ 7"
	≤ 40	1'-0"	# 5 @ 10"

TABLE "B"

WALL REINFORCING AND THICKNESS					
MH BASE DIA FT	DEPTH TO PIPE TO INV (FT)	MAXIMUM CAST-IN-PLACE WALL HEIGHT	WALL THICKNESS	REINFORCING AT EACH FACE	
				VERTICAL	HORIZONTAL
8	≤ 20	6'-0"	0'-10"	# 6 @ 12"	# 5 @ 12"
	≤ 25	6'-6"	0'-10"	# 6 @ 10"	
	≤ 30	7'-0"	0'-10"	# 6 @ 8"	
	≤ 40	8'-0"	1'-0"	# 6 @ 8"	
	≤ 50	9'-0"	1'-2"	# 6 @ 8"	
	≤ 60	10'-0"	1'-4"	# 6 @ 6"	
6	≤ 15	5'-0"	0'-8"	# 5 @ 12"	# 5 @ 12"
	≤ 20	5'-6"	0'-8"	# 5 @ 8"	
	≤ 25	6'-0"	0'-9"	# 5 @ 8"	
	≤ 30	6'-0"	0'-9"	# 5 @ 6"	# 5 @ 8"
	≤ 40	7'-0"	0'-10"	# 5 @ 8"	
	≤ 50	7'-0"	1'-0"	# 6 @ 8"	
	≤ 60	8'-0"	1'-2"	# 6 @ 7"	
5	≤ 15	5'-0"	0'-8"	# 5 @ 8"	# 4 @ 12"
	≤ 20	5'-4"	0'-8"	# 5 @ 7"	
	≤ 25	5'-8"	0'-10"	# 5 @ 6"	
	≤ 30	6'-0"	0'-10"	# 6 @ 10"	# 5 @ 12"
	≤ 40	6'-4"	0'-10"	# 6 @ 10"	
	≤ 50	6'-8"	1'-0"	# 6 @ 8"	
	≤ 60	7'-0"	1'-0"	# 6 @ 8"	
4	≤ 20	4'-8"	0'-8"	# 5 @ 12"	# 4 @ 12"
	≤ 25	5'-0"	0'-8"	# 5 @ 10"	
	≤ 30	5'-6"	0'-10"	# 6 @ 12"	
	≤ 40	6'-0"	0'-10"	# 6 @ 12"	

NOTE TO SPECIFIER:

1. TABLES "A" AND "B" WILL BE USED TO DESIGN THE CAST-IN-PLACE BASE AND WALL FOR VARIOUS MANHOLE DIAMETER AND DEPTH.

CITY OF HOUSTON
DEPARTMENT OF PUBLIC WORKS AND ENGINEERING
ENGINEERING, CONSTRUCTION AND REAL ESTATE DIVISION

SANITARY SEWER
PRECAST CONCRETE MANHOLE
WITH CAST-IN-PLACE BASE
(NOT TO SCALE)

APPROVED BY: CITY ENGINEER | APPROVED BY: DIRECTOR OF PUBLIC WORKS AND ENGINEERING
EFF DATE: OCT-01-2002 | DWG NO: 02082-08

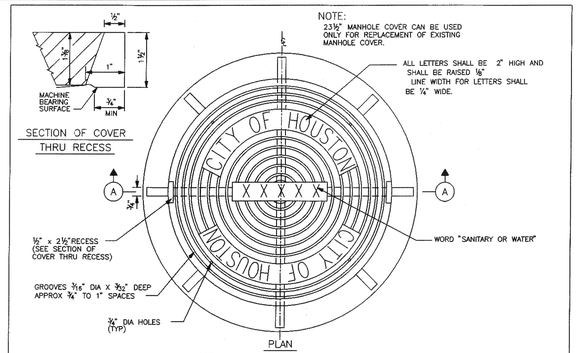

23½" MANHOLE COVER WITH FRAME

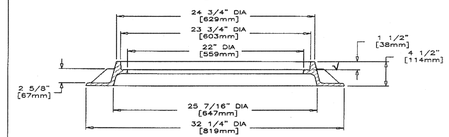

FRAME SECTION

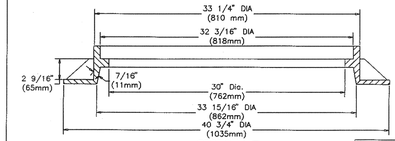

SECTION (A)

32" MANHOLE COVER WITH FRAME

1) NOTE APPROXIMATE WEIGHTS.
FRAME- 170 LBS 77KG
COVER = 270 LBS 123 KG
UNIT 440 LBS 200 KG
2) MATERIAL - GRAY IRON ASTM A48 CL35B
3) CASTING TO MEET M306 PROOF LOAD SPECIFICATION.
4) MODEL V-1420 ASY OR APPROVED EQUAL

CITY OF HOUSTON
DEPARTMENT OF PUBLIC WORKS AND ENGINEERING
ENGINEERING, CONSTRUCTION AND REAL ESTATE DIVISION

SANITARY SEWER AND WATER
MANHOLE FRAME AND COVER
(NOT TO SCALE)

APPROVED BY: CITY ENGINEER | APPROVED BY: DIRECTOR OF PUBLIC WORKS AND ENGINEERING
EFF DATE: OCT-01-2002 | DWG NO: 02084-01

DETAIL 1 — N.T.S.

DETAIL 2 — N.T.S.

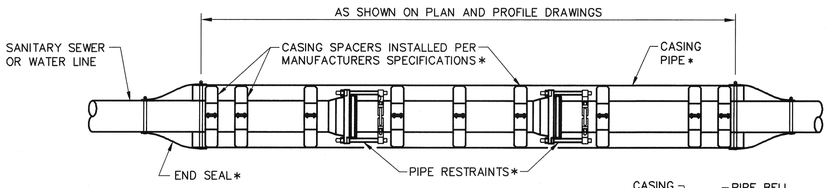

LONGITUDINAL SECTION

NOTES

1. PLACE SPACERS A MIN. OF 1'-0" BACK FROM EACH JOINT THAT IS WITHIN CASING AND 1'-0" FROM EACH END OF CASING.
2. POSITION SPACERS EVENLY ON PIPE NOT TO EXCEED A MAX. OF 12'-0".
3. USE RESTRAINTS ON ALL JOINTS IN CASING.

* SEE SPECIFICATIONS

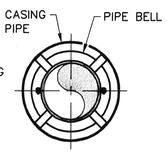

CROSS SECTION

DETAIL 3 — N.T.S.

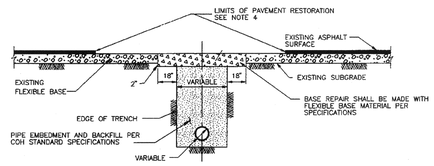

SECTION (A)

REPAIR OF FLEXIBLE BASE PAVEMENT

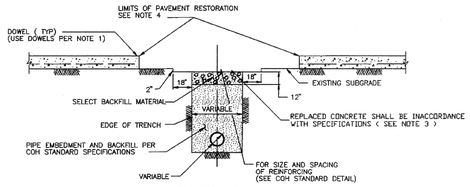

SECTION (B)

REPAIR OF REINFORCED CONCRETE PAVEMENT

NOTE:

1. EXPOSE 15" OF REINFORCING STEEL AT PROPOSED SAWED JOINT. IF NO REINFORCING STEEL EXISTS, USE HORIZONTAL DOWELS. HORIZONTAL DOWELS SHALL BE # 6 BARS, 24" LONG, 24" C-C, DRILLED AND EMBEDDED 8" INTO THE CENTER OF THE EXISTING SLAB. WITH "PO ROC" OR EQUAL.
2. IF REINFORCED CONCRETE IS OVERLAYED WITH ASPHALT, REPLACE WITH 2" MIN HMAC SURFACING.
3. REFER TO STANDARD DETAIL 02751-01 FOR REINFORCING STEEL REQUIREMENTS
4. REFER TO STANDARD DETAIL 02951-01 FOR PAVEMENT RESTORATION LIMITS.

CITY OF HOUSTON
DEPARTMENT OF PUBLIC WORKS AND ENGINEERING
ENGINEERING, CONSTRUCTION AND REAL ESTATE DIVISION

PAVEMENT REPAIR DETAILS
FOR STREET CUTS
(NOT TO SCALE)

APPROVED BY: CITY ENGINEER | APPROVED BY: DIRECTOR OF PUBLIC WORKS AND ENGINEERING
EFF DATE: OCT-01-2002 | DWG NO: 02902-01

RECORD DRAWING

THE CONSTRUCTION CONTRACTOR RECORDED CHANGES MADE DURING CONSTRUCTION ON PRINTS OF THE CONTRACT DRAWINGS.

KLOTZ ASSOCIATES, INC. HAS CREATED THIS RECORD DRAWING BY POSTING THE INFORMATION SUBMITTED BY THE CONTRACTOR ON THE ORIGINALS OF THE CONTRACT DRAWINGS. ATTESTED BY:

SIGNATURE: _____
NAME: RALPH E. COX, P.E.
DATE: 12/02/11

No.	Date	Revisions	App.

STATE OF TEXAS
RALPH E. COX
61026
REGISTERED PROFESSIONAL ENGINEER
2/11/08

klotz associates

Binkley & Barfield consulting engineers
1710 Seamist Drive
Houston, Texas 77008-3189
(713) 869-3433

SURVEYED BY: GEOSOLUTIONS | FIELD BOOK NO. : N/A

CITY OF HOUSTON
DEPARTMENT OF PUBLIC WORKS AND ENGINEERING

ALMEDA SIMS WWTP & SPF IMPROVEMENTS PACKAGE I

STANDARD CIVIL DETAILS
(SHEET 2)

FILE NO:	WW4903
WBS:	000298-0004-4
DRAWING SCALE	AS SHOWN
CITY OF HOUSTON PM	IRAJ RANJBAR, P.E.
DWG NO. :	C-601
SHEET NO.	17 OF 109

PUBLIC WORKS AND ENGINEERING
ACCEPTED & FILED
44188
CITY DRAWING NUMBER
HOUSTON, TEXAS

COLOR TABLE:

ORIGINAL SCALE IN INCHES FOR REDUCED PLANS
0 1 2 3

J:\0620.002.000\07.00 CADD\Package 1\Standard Details\Civil Details.dwg Feb 08,2008 - 8:36am ramirezm

NOTES:

1. THIS DETAIL MAY BE USED ONLY FOR DRY STABLE TRENCH CONDITIONS PER COH STANDARD. SEE COH STANDARD SPECIFICATION FOR REQUIREMENTS IN OTHER CONDITIONS.
2. MIN TRENCH WIDTH SHALL BE PIPE OD PLUS AN ALLOWANCE "A" FOR THE NOMINAL PIPE SIZE:

NOMINAL PIPE SIZE	"A"
15" TO 30"	24"
OVER 30"	36"

3. MAX TRENCH WIDTH SHALL BE NOT GREATER THAN MIN TRENCH WIDTH PLUS 24 INCHES, UNLESS OTHERWISE NOTED.
4. ALTERNATIVE EMBEDMENT BACKFILL MATERIALS FOR FORCE MAINS MAY BE ALLOWED. SEE COH STANDARD SPECIFICATIONS.

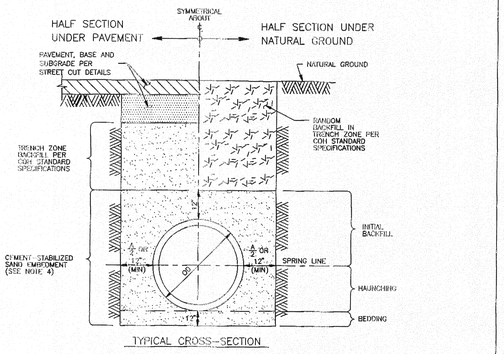

TYPICAL CROSS-SECTION

CITY OF HOUSTON DEPARTMENT OF PUBLIC WORKS AND ENGINEERING ENGINEERING, CONSTRUCTION AND REAL ESTATE DIVISION	
SANITARY OR STORM SEWER BEDDING AND BACKFILL FOR DRY STABLE TRENCH (NOT TO SCALE)	
APPROVED BY: CITY ENGINEER	APPROVED BY: DIRECTOR OF PUBLIC WORKS AND ENGINEERING
EFF DATE: OCT-01-2002	DWG NO: 02317-03

DETAIL 1 N.T.S.

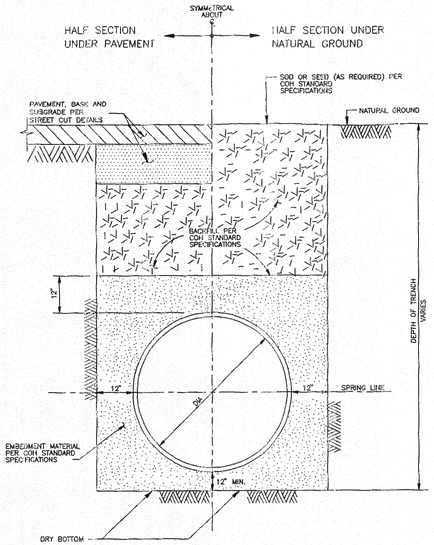

CITY OF HOUSTON DEPARTMENT OF PUBLIC WORKS AND ENGINEERING ENGINEERING, CONSTRUCTION AND REAL ESTATE DIVISION	
WATER DISTRIBUTION MAIN BEDDING AND BACKFILL FOR OPEN CUT TRENCHES (NOT TO SCALE)	
APPROVED BY: CITY ENGINEER	APPROVED BY: DIRECTOR OF PUBLIC WORKS AND ENGINEERING
EFF DATE: OCT-01-2002	DWG NO: 02317-04

DETAIL 2 N.T.S.

NOTES ON USE OF STANDARD DETAIL 02082-02

NOTES TO SPECIFIER:

1. *"-" INDICATES THAT A SPECIAL DESIGN OR THE NEXT LARGER MANHOLE SIZE SHALL BE USED.*
2. *TABLE 1 IS BASED ON A MIN SEPARATION DISTANCE "S" OF 15.5" OR INTERSECTION PIPE OD/2, WHICHEVER IS GREATER, BETWEEN MAIN AND INTERSECTING PIPES ALONG THE MANHOLE INSIDE WALL ARC.*
3. *PIPE WALL THICKNESS USED IN TABLE 1 ARE BASED ON RCP. THE DESIGN ENGINEER MAY CALCULATE TO SEE IF THINNER WALL PIPES CAN MEET THE SEPARATION CRITERIA FOR ANGLES SMALLER THAN THE TABLE ALLOWS.*

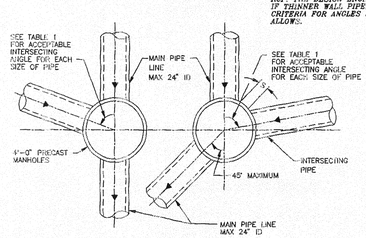

MAX 24" ID MAIN PIPE ALLOWED FOR STRAIGHT THROUGH TO 45° DEFLECTION

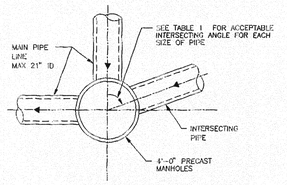

MAX 21" ID MAIN PIPE ALLOWED FOR 45° TO 90° DEFLECTION

TABLE 1

MIN ANGLE AND INTERSECTING PIPE SIZES FOR A 4'-0" DIA MANHOLE

INTERSECTING PIPE SIZE (INCHES)	MIN INTERSECTING ANGLE IN DEGREES FOR FOR VARIOUS MAIN PIPE SIZES IN INCHES							
	6"	8"	10"	12"	15"	18"	21"	24"
6	55	58	60	65	70	75	80	85
8		60	63	68	73	77	82	87
10			66	71	75	80	85	90
12				76	80	85	90	–
15					85	90	–	–
18	NOT APPLICABLE UNLESS HYDRAULICS DICTATE (INTERSECTING PIPE > MAIN PIPE)					–	–	–
21							–	–
24								–

CITY OF HOUSTON DEPARTMENT OF PUBLIC WORKS AND ENGINEERING ENGINEERING, CONSTRUCTION AND REAL ESTATE DIVISION	
SANITARY SEWER 4'-0" DIAMETER PRECAST CONCRETE MANHOLE NOTES (NOT TO SCALE)	
APPROVED BY: CITY ENGINEER	APPROVED BY: DIRECTOR OF PUBLIC WORKS AND ENGINEERING
EFF DATE: OCT-01-2002	DWG NO: 02082N-02

DETAIL 3 N.T.S.

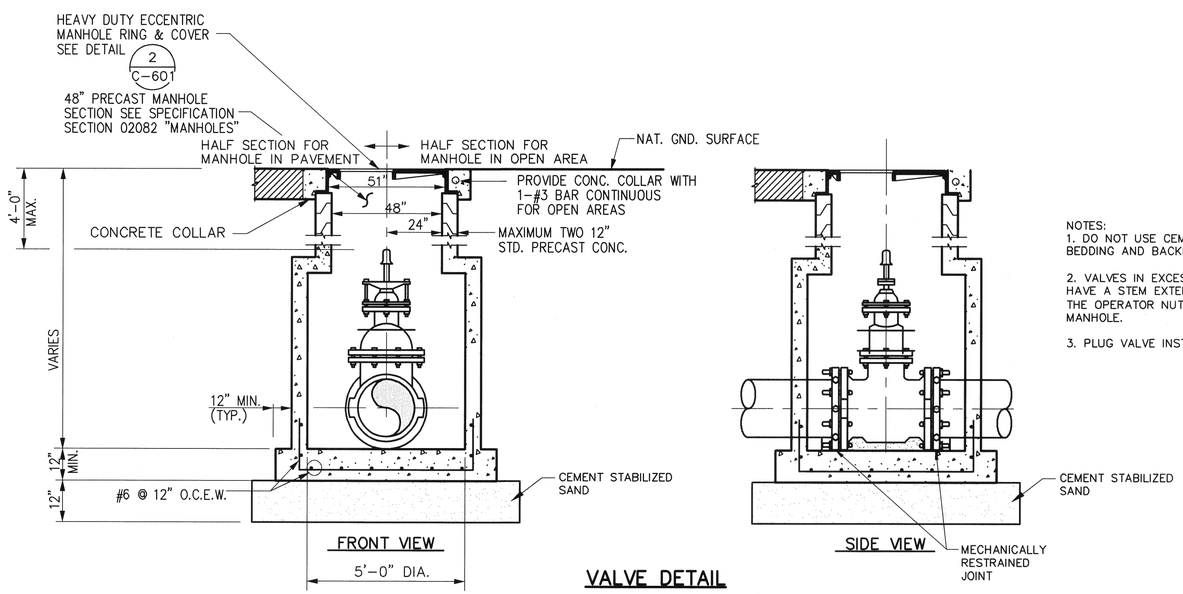

NOTES:
1. DO NOT USE CEMENT STABILIZED SAND BEDDING AND BACKFILL AROUND VALVES.

2. VALVES IN EXCESS OF 5' IN DEPTH SHALL HAVE A STEM EXTENSION INSTALLED TO BRING THE OPERATOR NUT TO WITHIN 2' OF TOP OF MANHOLE.

3. PLUG VALVE INSTALLATION SIMILAR.

VALVE DETAIL

DETAIL 4 N.T.S.

RECORD DRAWING

THE CONSTRUCTION CONTRACTOR RECORDED CHANGES MADE DURING CONSTRUCTION ON PRINTS OF THE CONTRACT DRAWINGS.

KLOTZ ASSOCIATES, INC. HAS CREATED THIS RECORD DRAWING BY POSTING THE INFORMATION SUBMITTED BY THE CONTRACTOR ON THE ORIGINALS OF THE CONTRACT DRAWINGS. ATTESTED BY:

SIGNATURE: _____

NAME: RALPH E. COX, P.E.

DATE: 12/02/11

No.	Date	Revisions	App.

STATE OF TEXAS
RALPH E. COX
61026
REGISTERED PROFESSIONAL ENGINEER
2/11/08

klotz associates

Binkley & Barfield consulting engineers
1710 Seamist Drive
Houston, Texas 77008-3189
(713) 869-3433

SURVEYED BY: GEOSOLUTIONS | FIELD BOOK NO. : N/A

CITY OF HOUSTON
DEPARTMENT OF PUBLIC WORKS AND ENGINEERING

ALMEDA SIMS WWTP & SPF IMPROVEMENTS PACKAGE I

STANDARD CIVIL DETAILS (SHEET 3)

FILE NO:	WW4903
WBS:	000298-0004-4
DRAWING SCALE	AS SHOWN
CITY OF HOUSTON PM	IRAJ RANJBAR, P.E.
DWG NO. :	C-602
SHEET NO.	18 OF 109

PUBLIC WORKS AND ENGINEERING ACCEPTED & FILED 44188 CITY DRAWING NUMBER HOUSTON, TEXAS

COLOR TABLE:
ORIGINAL SCALE IN INCHES FOR REDUCED PLANS
0 1 2 3

J:\0620.002.000\07.00 CADD\Package 1\Standard Details\Civil Details.dwg Feb 11,2008 - 8:15am lewiss

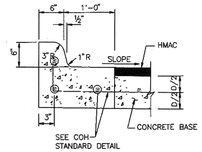

ESPLANADE CURB CONNECTED TO CONCRETE BASE

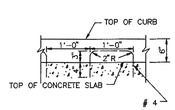

ALTERNATE CONCRETE CURB REINFORCEMENT

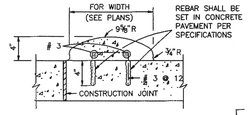

MOUNTABLE CURB

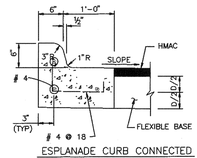

ESPLANADE CURB CONNECTED TO FLEXIBLE BASE

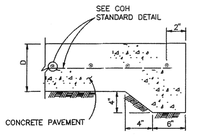

STANDARD CONCRETE PAVING HEADER

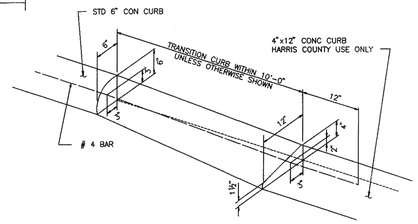

CURB TRANSITION

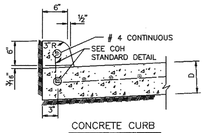

CONCRETE CURB

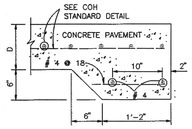

STANDARD RAILROAD HEADER

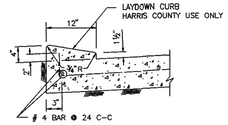

4-INCH x 12-INCH MONOLITHIC CURB

NOTE:
WHEN CONCRETE CURB IS TO BE PLACED EXISTING CONCRETE USE BASE #4 @ 18-10" LONG, DOWELLED AND SET IN EPOXY GROUT.
SET #4 DOWELLS, 25" LONG AT 12" C-C WHEN PAVEMENT SECTION POURED.

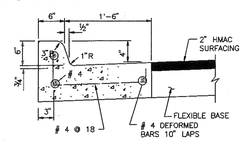

MONOLITHIC CURB AND GUTTER

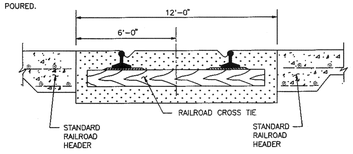

STANDARD RAILROAD CROSSING - SINGLE TRACK

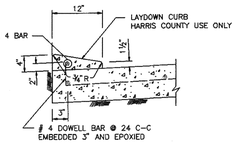

4-INCH x 12-INCH LAYDOWN CURB

4"x12" MONOLITHIC AND TRANSITION CURB NOTES:

1. 6-INCH CONCRETE CURB TO BE CONSTRUCTED ON ALL ESPLANADES, ISLANDS NON-RESIDENTIAL STREETS, AND RESIDENTIAL STREETS.
2. TRANSITIONS FROM 6-INCH CONCRETE CURB TO 4-INCH x 12-INCH CONCRETE CURB TO BE ACCOMPLISHED WITHIN 10 FEET, UNLESS OTHERWISE SHOWN. IF THIS 10-FOOT TRANSITION CURB IS NOT POURED MONOLITHICLY WITH THE PAVEMENT, THEN REINFORCING STEEL AS SHOWN IN "4-INCH x 12-INCH TRANSITION CURB" IS TO BE INSTALLED.

CITY OF HOUSTON	
DEPARTMENT OF PUBLIC WORKS AND ENGINEERING ENGINEERING, CONSTRUCTION AND REAL ESTATE DIVISION	
CURB, CURB AND GUTTER AND HEADER DETAILS (NOT TO SCALE)	
APPROVED BY: CITY ENGINEER	APPROVED BY: DIRECTOR OF PUBLIC WORKS AND ENGINEERING
EFF DATE: OCT-01-2002	DWG NO: 02771-01

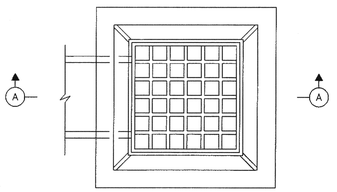

PLAN

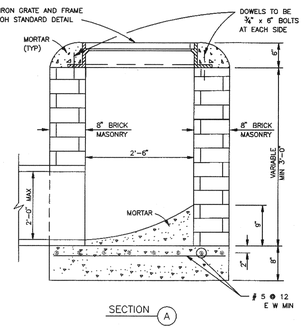

SECTION A

CITY OF HOUSTON	
DEPARTMENT OF PUBLIC WORKS AND ENGINEERING ENGINEERING, CONSTRUCTION AND REAL ESTATE DIVISION	
STORM SEWER TYPE "A" GRATE INLET (NOT TO SCALE)	
APPROVED BY: CITY ENGINEER	APPROVED BY: DIRECTOR OF PUBLIC WORKS AND ENGINEERING
EFF DATE: OCT-01-2002	DWG NO: 02632-01

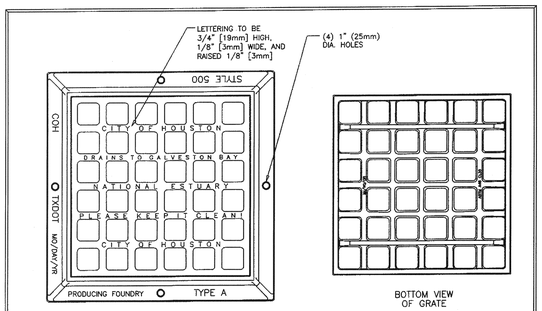

OPEN AREA OF GRATE
473 SQ. IN.
[3051 SQ. cm.]

1) NOTE: APPROXIMATE WEIGHTS.
GRATE- 190 LBS 86kg
FRAME- 235 LBS 107kg
UNIT- 425 LBS 193kg
2) MATERIAL- GRAY IRON ASTM A48 CL35B
3) CASTING TO MEET M306 PROOF LOAD SPECIFICATION
4) MODEL V-4880 ASY OR APPROVED EQUAL

CITY OF HOUSTON	
DEPARTMENT OF PUBLIC WORKS AND ENGINEERING ENGINEERING, CONSTRUCTION AND REAL ESTATE DIVISION	
STORM SEWER TYPE "A" INLET GRATE AND FRAME (NOT TO SCALE)	
APPROVED BY: CITY ENGINEER	APPROVED BY: DIRECTOR OF PUBLIC WORKS AND ENGINEERING
EFF. DATE: OCT-01-2002	DWG. NO: 02084-08

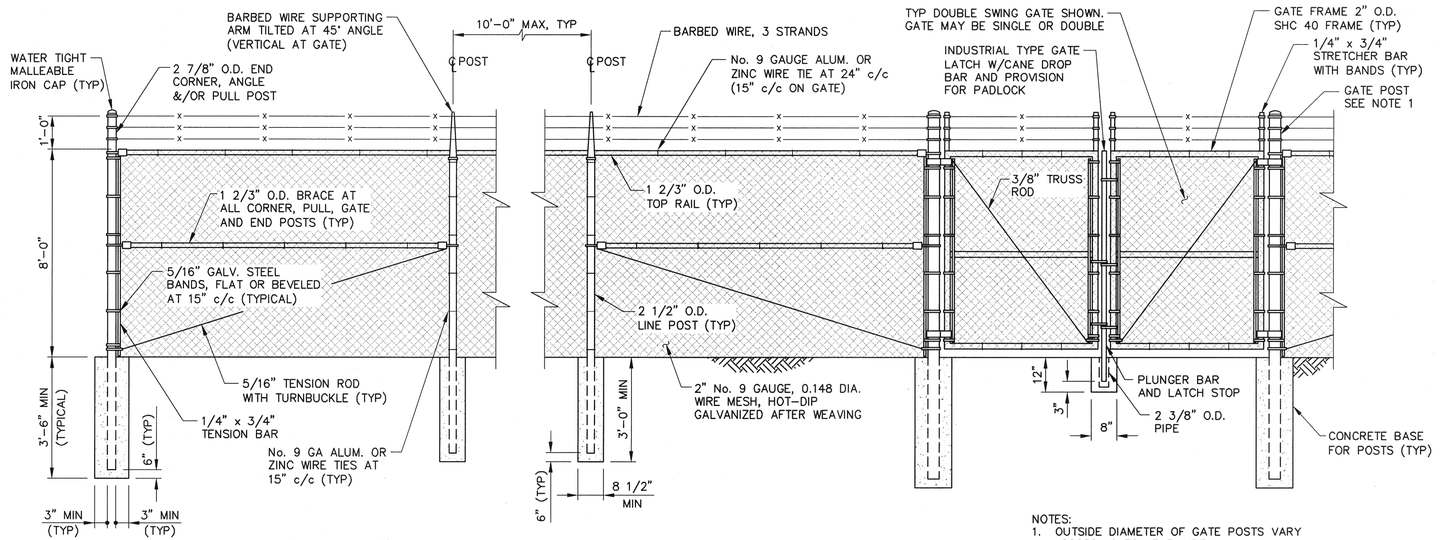

CHAIN LINK SECURITY FENCE DETAIL (1)
N.T.S.

NOTES:
1. OUTSIDE DIAMETER OF GATE POSTS VARY ACCORDING TO LEAF WIDTH:
6'-0" OR LESS = 2 7/8" O.D.
13'-0" OR LESS = 4" O.D.
18'-0" OR LESS = 6 5/8" O.D.
OVER 18'-0" = 8 5/8" O.D.

RECORD DRAWING

THE CONSTRUCTION CONTRACTOR RECORDED CHANGES MADE DURING CONSTRUCTION ON PRINTS OF THE CONTRACT DRAWINGS.

KLOTZ ASSOCIATES, INC. HAS CREATED THIS RECORD DRAWING BY POSTING THE INFORMATION SUBMITTED BY THE CONTRACTOR ON THE ORIGINALS OF THE CONTRACT DRAWINGS. ATTESTED BY:

SIGNATURE:

NAME: RALPH E. COX, P.E.

DATE: 12/02/11

No.	Date	Revisions	App.

STATE OF TEXAS
RALPH E. COX
61026
REGISTERED
PROFESSIONAL ENGINEER
2/11/08

klotz associates

Binkley & Barfield consulting engineers
1710 Seamist Drive
Houston, Texas 77008-3189
(713) 869-3433

SURVEYED BY: GEOSOLUTIONS | FIELD BOOK NO. : N/A

CITY OF HOUSTON
DEPARTMENT OF PUBLIC WORKS AND ENGINEERING

ALMEDA SIMS WWTP & SPF IMPROVEMENTS PACKAGE I

STANDARD CIVIL DETAILS
(SHEET 4)

FILE NO:	WW4903
WBS:	000298-0004-4
DRAWING SCALE	AS SHOWN
CITY OF HOUSTON PM	IRAJ RANJBAR, P.E.
DWG NO. :	C-603
SHEET NO.	19 OF 109

PUBLIC WORKS AND ENGINEERING
ACCEPTED & FILED
44486
CITY DRAWING NUMBER
HOUSTON, TEXAS

COLOR TABLE:

ORIGINAL SCALE IN INCHES FOR REDUCED PLANS
0 1 2 3

J:\0620.002.000\07.00 CADD\Package 1\Standard Details\Civil Details.dwg Feb 11,2008 - 8:16am lewiss

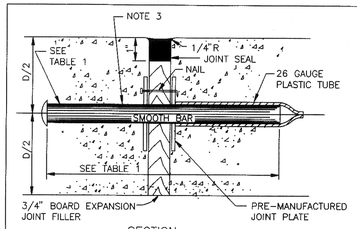

SECTION

DOWEL TYPE EXPANSION JOINT

N.T.S

SECTION

DEFORMED METAL STRIP

N.T.S.

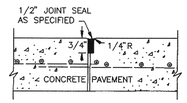

SECTION

CONSTRUCTION JOINT SEAL

N.T.S.

PLAN – JOINT PLATE

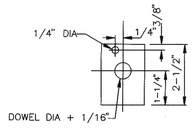

ELEVATION – JOINT PLATE

N.T.S.

NOTES:

1. STEEL TO MEET ASTM STANDARD SPECIFICATIONS FOR CONCRETE REINFORCING BARS. UNITS TO BE SPACED ON 12" CENTERS.
2. EXPANSION JOINT TO BE PLACED AT THE END OF EACH CURB RADIUS AND SPACED AT A MAXIMUM DISTANCE OF 40' FEET 6 INCHES.
3. CENTER DOWEL HORIZONTALLY ON JOINT.
4. CENTER DOWEL VERTICALLY IN CONCRETE BASE. EXTEND THICKENED CONCRETE AS NEEDED TO MAINTAIN 3" MIN. COVER.
5. CITY OF HOUSTON APPROVED PRODUCTS MAY BE USED AS JOINT PLATE ALTERNATIVE

TABLE 1

PAVEMENT THICKNESS (IN)	DOWEL SIZES AND SPACINGS		
	DIAMETER (IN)	LENGTH (IN)	SPACING (IN)
6	3/4	18	12
7	1	18	12
8	1	18	12
9	1 1/4	18	12
10	1 1/4	18	12
11	1 1/4	18	12
12	1 1/4	18	12

CITY OF HOUSTON
DEPARTMENT OF PUBLIC WORKS AND ENGINEERING
ENGINEERING, CONSTRUCTION AND REAL ESTATE DIVISION

PAVEMENT EXPANSION AND CONSTRUCTION JOINT DETAILS
(NOT TO SCALE)

APPROVED BY: CITY ENGINEER — APPROVED BY: DIRECTOR OF PUBLIC WORKS AND ENGINEERING

EFF. DATE: OCT-01-2002 | DWG NO:02752-01

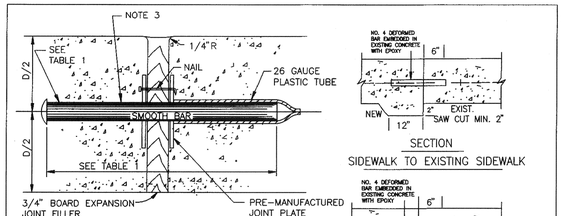

SECTION

DOWEL TYPE EXPANSION JOINT

N.T.S

SECTION

SIDEWALK TO EXISTING SIDEWALK

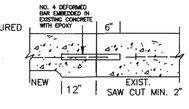

SECTION

SIDEWALK TO EXISTING DRIVEWAY

PLAN – JOINT PLATE

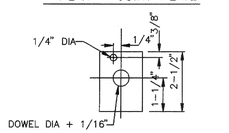

ELEVATION – JOINT PLATE

N.T.S.

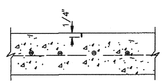

SECTION

CONTROL JOINT

N.T.S.

NOTES:

1. STEEL TO MEET ASTM STANDARD SPECIFICATIONS FOR CONCRETE REINFORCING BARS.
2. EXPANSION JOINT TO BE PLACED AT THE END OF EACH CURB RADIUS AND SPACED AT A MAXIMUM DISTANCE OF 36' FEET. MAXIMUM SPACING FOR CONTROL JOINTS SHALL BE 5' FEET.
3. CENTER DOWEL HORIZONTALLY ON JOINT.
4. CENTER DOWEL VERTICALLY IN CONCRETE AS NEEDED TO MAINTAIN 2" MIN. COVER.

TABLE 1

PAVEMENT THICKNESS (IN)	DOWEL SIZES AND SPACINGS		
	DIAMETER (IN)	LENGTH (IN)	SPACING (IN)
4 1/2	1/2	18	12
5	1/2	18	12
6	3/4	18	12
7	1	18	12

CITY OF HOUSTON
DEPARTMENT OF PUBLIC WORKS AND ENGINEERING
ENGINEERING, CONSTRUCTION AND REAL ESTATE DIVISION

SIDEWALK EXPANSION AND CONSTRUCTION JOINT DETAILS
(NOT TO SCALE)

APPROVED BY: CITY ENGINEER — APPROVED BY: DIRECTOR OF PUBLIC WORKS AND ENGINEERING

EFF. DATE: OCT-01-2002 | DWG NO:02752-02

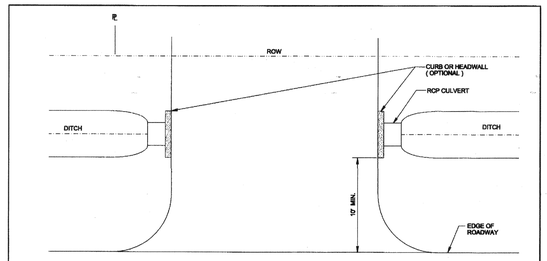

STANDARD OPEN DITCH DRIVEWAY - PLAN

NTS

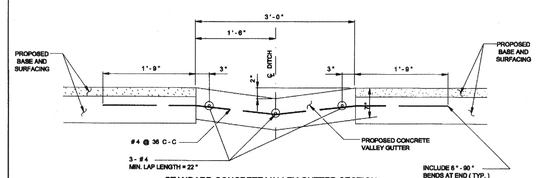

STANDARD CONCRETE VALLEY GUTTER SECTION

NTS

1. REINFORCED CONCRETE PIPE (RCP) CULVERTS AND CONCRETE VALLEY GUTTER GRADES SHALL BE SET BY CITY ENGINEER. PROFILE SHOWING THE PROPOSED AND EXISTING DITCH FLOWLINE WILL BE REQUIRED WHERE CONCRETE VALLEY GUTTERS ARE TO BE CONSTRUCTED IN LIEU OF CULVERTS.
2. CULVERT SIZE WILL BE APPROVED BY CITY ENGINEER WITH 18" DIAMETER MINIMUM.
3. SPACING OF TYPE "D" OR "D-1" INLETS SHALL BE DETERMINED BY CITY ENGINEER. SEE DRAWING NO. 02632-07 FOR TYPE "D" OR DRAWING NO. 02632-08 FOR TYPE "D-1".
4. DRIVEWAY MAY BE CONCRETE, ASPHALT OR ANY OTHER MATERIAL WHICH WILL NOT PERMIT WIND OR WATERBORNE EROSION.
5. A 3-FOOT CONCRETE VALLEY GUTTER SECTION SHALL BE CONSTRUCTED THROUGH THE PROPOSED DRIVEWAY WHERE THE CITY ENGINEER DETERMINES THE INSTALLATION OF DITCH CULVERTS TO BE IMPRACTICAL DUE TO INSUFFICIENT DEPTH. THE VALLEY GUTTER SECTION WILL BE CONSTRUCTED OF 5-1/2 SACK CEMENT PER CUBIC YARD OF CONCRETE.

CITY OF HOUSTON
DEPARTMENT OF PUBLIC WORKS AND ENGINEERING

DRIVEWAYS WITH CULVERTS OR VALLEY GUTTERS ON OPEN DITCH TYPE STREETS

APPROVED BY: CITY ENGINEER — APPROVED BY: DIRECTOR OF PUBLIC WORKS AND ENGINEERING

DATE: 05-23-03

DWG NO: 02754-02 | DWG NO: 17201-2 (BUILDING CODE)

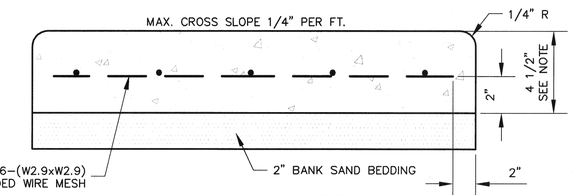

SIDEWALK CROSS-SECTION

NTS

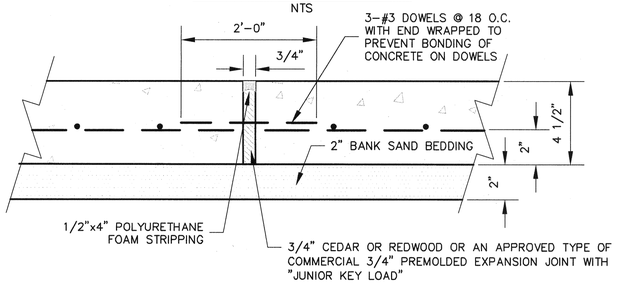

SIDEWALK EXPANSION JOINT

SIDEWALK NOTES:

1. ALL CONCRETE SIDEWALKS SHALL BE REINFORCED AS SHOWN.
2. CONTRACTION JOINTS SHALL BE SPACED AT 4' INTERVALS.
3. CONTRACTION JOINTS SHALL BE 1/8" DEEP AND EDGED WITH A JOINTER OR GROOVING TOOL.
4. 1/2" EXPANSION MATERIAL REQUIRED WHERE SIDEWALKS ABUT BUILDINGS, CURBS, DRIVEWAYS, OR EXIST. SIDEWALKS.
5. EXPANSION JOINTS SHALL BE SPACED AT A MAXIMUM OF 20' INTERVALS.
6. EXISTING SIDEWALKS SHALL BE SAWCUT TO FORM A SQUARE SURFACE AT LOCATIONS WHERE PROPOSED SIDEWALKS CONNECT TO EXISTING SIDEWALKS.
7. MAXIMUM AGGREGATE SIZE FOR CONCRETE SIDEWALKS IS 1".
8. ALL SIDEWALKS AND RAMPS SHALL BE ADA COMPLIANT.

SIDEWALK DETAIL 1 / –

N.T.S.

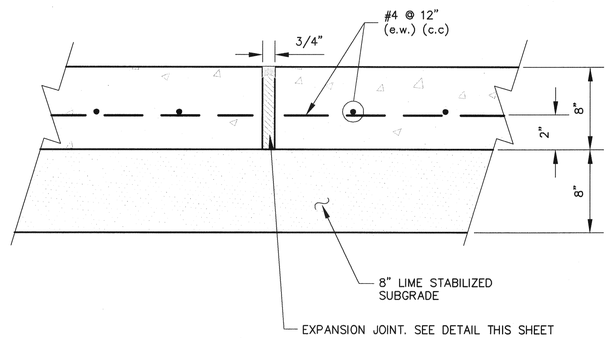

PROPOSED CONCRETE SECTION

NTS

CONCRET PVMNT DETAIL 2 / –

N.T.S.

RECORD DRAWING

THE CONSTRUCTION CONTRACTOR RECORDED CHANGES MADE DURING CONSTRUCTION ON PRINTS OF THE CONTRACT DRAWINGS.

KLOTZ ASSOCIATES, INC. HAS CREATED THIS RECORD DRAWING BY POSTING THE INFORMATION SUBMITTED BY THE CONTRACTOR ON THE ORIGINALS OF THE CONTRACT DRAWINGS. ATTESTED BY:

SIGNATURE:

NAME: RALPH E. COX, P.E.

DATE: 12/02/11

No.	Date	Revisions	App.

STATE OF TEXAS — RALPH E. COX — 61026 — REGISTERED PROFESSIONAL ENGINEER — 2/11/08

klotz associates

Binkley & Barfield consulting engineers
1710 Seamist Drive
Houston, Texas 77008-3189
(713) 869-3433

SURVEYED BY: GEOSOLUTIONS | FIELD BOOK NO. : N/A

CITY OF HOUSTON
DEPARTMENT OF PUBLIC WORKS AND ENGINEERING

ALMEDA SIMS WWTP & SPF IMPROVEMENTS PACKAGE I

STANDARD CIVIL DETAILS (SHEET 5)

FILE NO:	WW4903
WBS:	000298-0004-4
DRAWING SCALE	AS SHOWN
CITY OF HOUSTON PM	IRAJ RANJBAR, P.E.
DWG NO. :	C-604
SHEET NO.	20 OF 109

PUBLIC WORKS AND ENGINEERING — ACCEPTED & FILED — 44488 CITY DRAWING NUMBER — HOUSTON, TEXAS

COLOR TABLE:

ORIGINAL SCALE IN INCHES FOR REDUCED PLANS
0 1 2 3

11 1/4° BEND	
PIPE SIZE	BEARING AREA
10"	2 S.F.
18"	2 S.F.
20"	5 S.F.
24"	7 S.F.
30"	11 S.F.
36"	15 S.F.

22 1/2° BEND	
PIPE SIZE	BEARING AREA
10"	3 S.F.
18"	8 S.F.
20"	10 S.F.
24"	13 S.F.
30"	21 S.F.
36"	30 S.F.

45° BEND	
PIPE SIZE	BEARING AREA
10"	5 S.F.
18"	16 S.F.
20"	17 S.F.
24"	24 S.F.
30"	38 S.F.
36"	54 S.F.

90° BEND	
PIPE SIZE	BEARING AREA
10"	6 S.F.
18"	20 S.F.
20"	24 S.F.
24"	34 S.F.
30"	53 S.F.
36"	77 S.F.

TEE	
PIPE SIZE	BEARING AREA
10"	6 S.F.
18"	20 S.F.
20"	24 S.F.
24"	34 S.F.
30"	53 S.F.
36"	77 S.F.

WYE	
PIPE SIZE	BEARING AREA
10"	5 S.F.
18"	16 S.F.
20"	17 S.F.
24"	24 S.F.
30"	38 S.F.
36"	54 S.F.

THRUST BLOCKING NOTES:

1. USE CLASS "B" CONCRETE.
2. PLACE CONCRETE AGAINST UNDISTURBED SOIL.
3. TABLES PROVIDE MINIMUM BEARING AREA REQUIREMENTS.
4. DIMENSIONS ARE BASED ON 150 PSI TEST PRESSURE AND 2000 PSF SOIL BEARING PRESSURE.
5. USE THRUST BLOCK DETAILS ONLY WHERE NOTED OR SHOWN ON DRAWINGS.

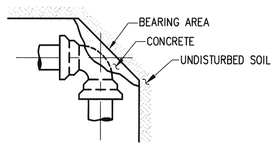

90° BEND

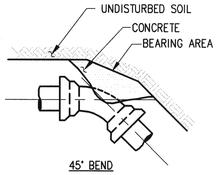

45° BEND

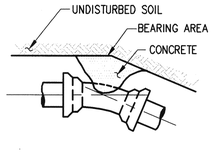

11 1/4° & 22 1/2° BEND

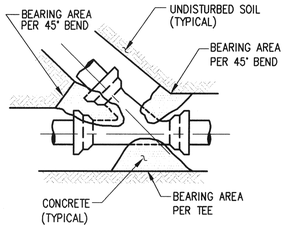

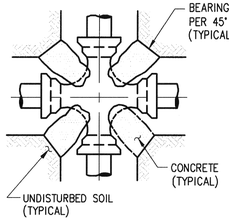

CROSS

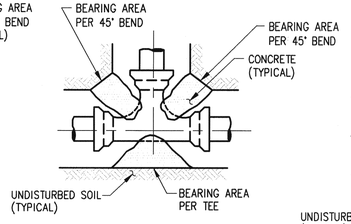

TEE

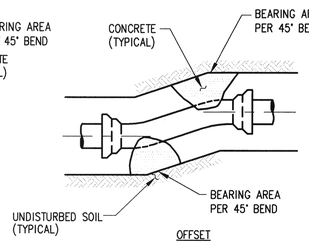

OFFSET

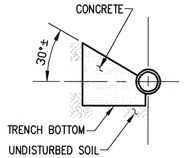

CROSS SECTION

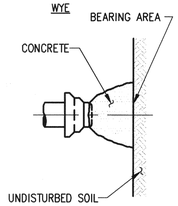

PLUG

THRUST BLOCKING

DETAIL 1 — N.T.S.

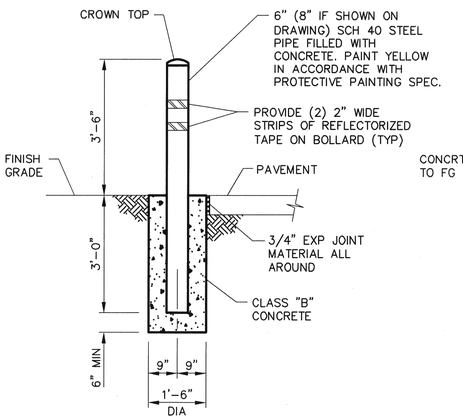

TYPICAL BOLLARD

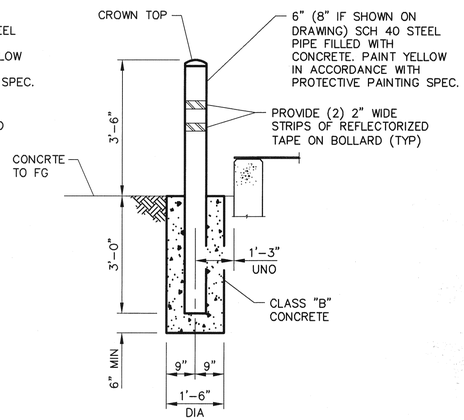

TYP BOLLARD AROUND VAULT OR EQUIPMENT CURB

DETAIL 3 — N.T.S.

RECORD DRAWING

THE CONSTRUCTION CONTRACTOR RECORDED CHANGES MADE DURING CONSTRUCTION ON PRINTS OF THE CONTRACT DRAWINGS.

KLOTZ ASSOCIATES, INC. HAS CREATED THIS RECORD DRAWING BY POSTING THE INFORMATION SUBMITTED BY THE CONTRACTOR ON THE ORIGINALS OF THE CONTRACT DRAWINGS, ATTESTED BY:

SIGNATURE: [signature]
NAME: RALPH E. COX, P.E.
DATE: 12/02/11

No.	Date	Revisions	App.

STATE OF TEXAS — RALPH E. COX — 61026 — REGISTERED PROFESSIONAL ENGINEER
2/11/08

klotz associates

Binkley & Barfield consulting engineers
1710 Seamist Drive
Houston, Texas 77008-3189
(713) 868-3433

SURVEYED BY: GEOSOLUTIONS | FIELD BOOK NO. : N/A

CITY OF HOUSTON
DEPARTMENT OF PUBLIC WORKS AND ENGINEERING

ALMEDA SIMS WWTP & SPF IMPROVEMENTS PACKAGE I

STANDARD CIVIL DETAILS (SHEET 6)

FILE NO:	WW4903
WBS:	000298-0004-4
DRAWING SCALE	AS SHOWN
CITY OF HOUSTON PM	IRAJ RANJBAR, P.E.
DWG NO. :	C-605
SHEET NO.	21 OF 109

PUBLIC WORKS AND ENGINEERING — ACCEPTED & FILED — 44488 — CITY DRAWING NUMBER — HOUSTON, TEXAS

J:\0620.002.000\07.00 CADD\Package 1\Standard Details\Civil Details.dwg Feb 08,2008 - 8:50am ramirezm

COLOR TABLE:

ORIGINAL SCALE IN INCHES FOR REDUCED PLANS
0 1 2 3

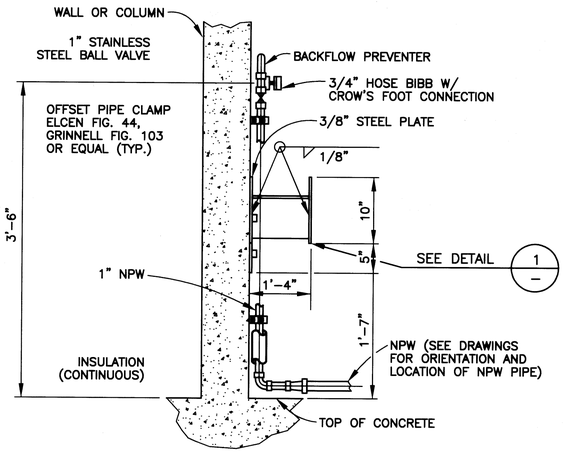

TYPICAL WALL OR COLUMN MOUNT HOSE BIBB ASSEMBLY DETAIL

HOSE BIBB 90

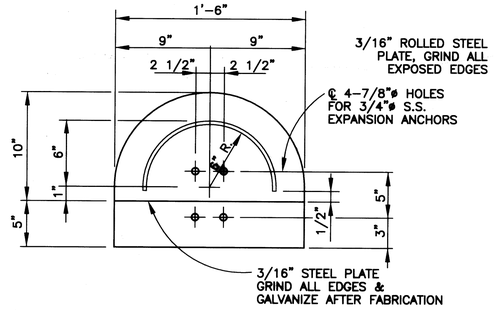

DETAIL 1

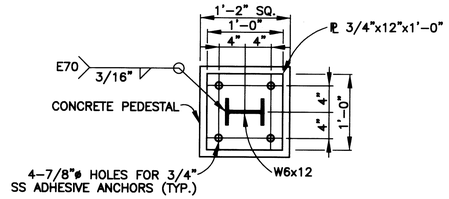

DETAIL 2

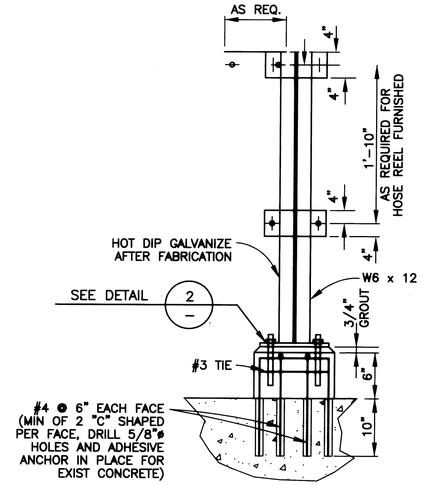

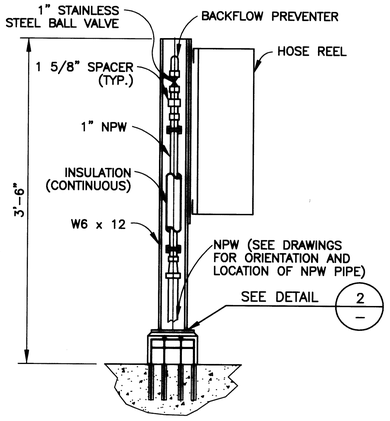

TYPICAL BASE MOUNT HOSE REEL ASSEMBLY DETAIL 91

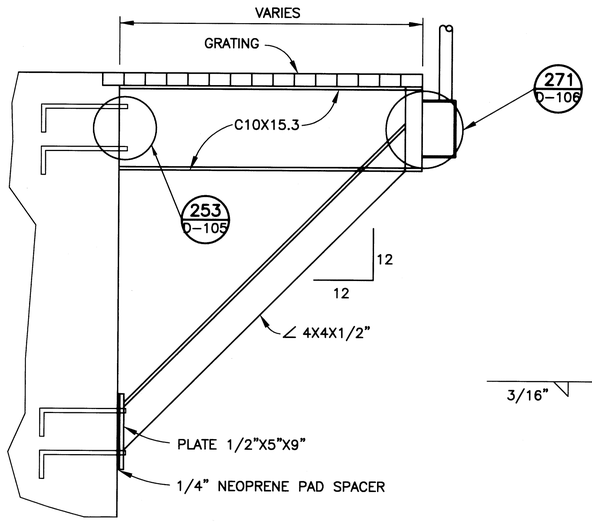

SECTION 216
SCALE: 1"=1'-0"

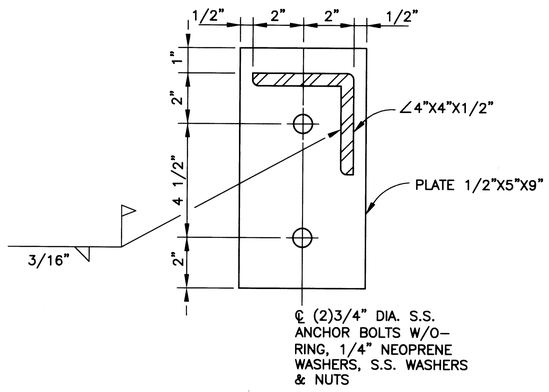

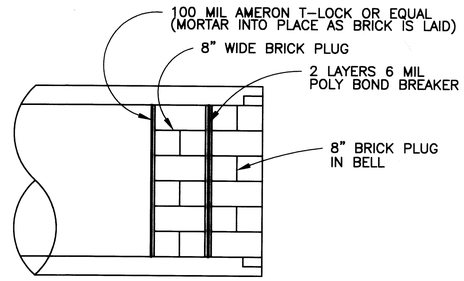

AS BUILT

BRICK PLUG DETAIL 217
SCALE: NOT TO SCALE

No.	Date	Revisions	App.

STATE OF TEXAS
ROGER C. BROWN
52635
LICENSED PROFESSIONAL ENGINEER
2-12-08

klotz associates

Binkley & Barfield
consulting engineers
1710 Seamist Drive
Houston, Texas 77008-3189
(713) 869-3433

SURVEYED BY: GEOSOLUTIONS FIELD BOOK NO. : N/A

CITY OF HOUSTON
DEPARTMENT OF PUBLIC WORKS AND ENGINEERING

ALMEDA SIMS WWTP & SPF IMPROVEMENTS PACKAGE I

MISCELLANEOUS DETAILS

FILE NO:	WW4903
WBS: R-000298-0004-4	
DRAWING SCALE	
N.T.S.	
CITY OF HOUSTON PM	
IRAJ RANJBAR, P.E.	
DWG NO. :	D-100
SHEET NO. 22 OF 109	

PUBLIC WORKS AND ENGINEERING ACCEPTED & FILED 44488 CITY DRAWING NUMBER HOUSTON, TEXAS

ORIGINAL SCALE IN INCHES FOR REDUCED PLANS
0 1 2 3

COLOR TABLE: ENVIRO-RD.ctb

G:\115800 Almeda\CADD_D-100 MISCELLANEOUS DETAILS.dwg Feb 11,2008 - 3:42pm rjd

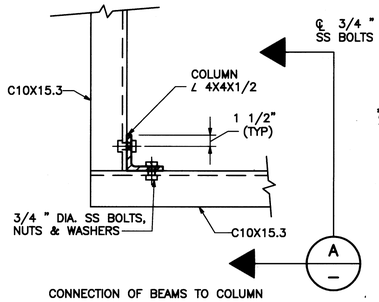

DETAIL 1
SCALE: NONE

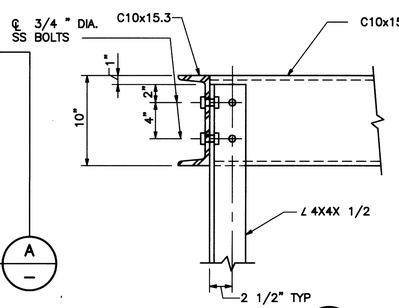

SECTION A
SCALE: NONE

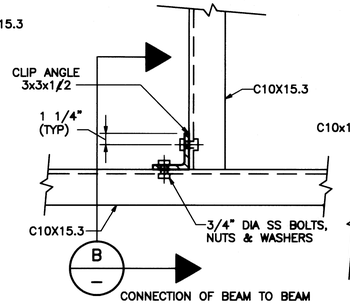

DETAIL 2
SCALE: NONE

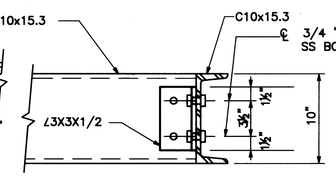

SECTION B
SCALE: NONE

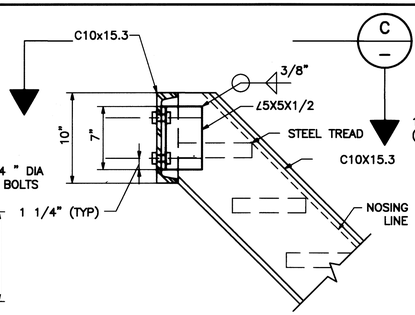

DETAIL 3
SCALE: NONE

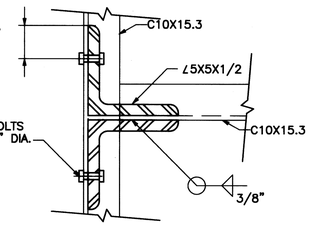

SECTION C
SCALE: NONE

NOTES:

1. HEIGHT OF STEPOVER WALKWAY SHALL BE IN EVEN 7 INCH INCREMENTS AND AT LEAST HIGH ENOUGH AND WIDE ENOUGH TO CLEAR ALL OBSTACLES BY AT LEAST 2 INCHES.
2. A LANDING AT LEAST 48"x48"x12" THICK WITH #5 @ 12 EW TOP SHALL BE PROVIDED AT ALL LOCATIONS WHERE STEPOVER LANDING ENDS WHERE THE EXISTING WALKWAY IS INSUFFICIENT.

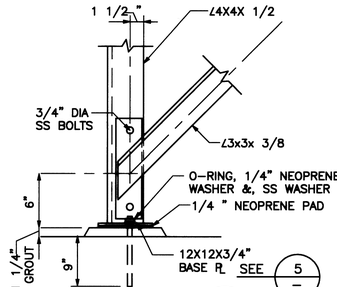

DETAIL 4
SCALE: NONE

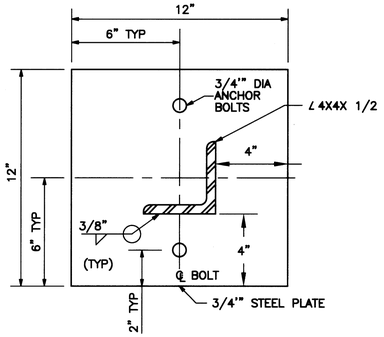

DETAIL 5
SCALE: NONE

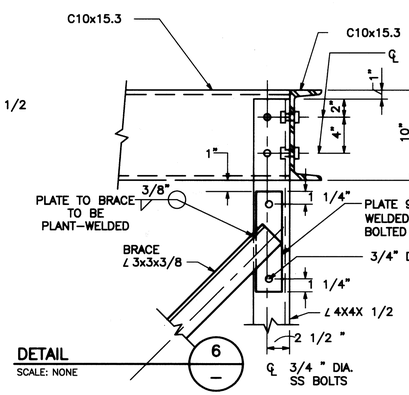

DETAIL 6
SCALE: NONE

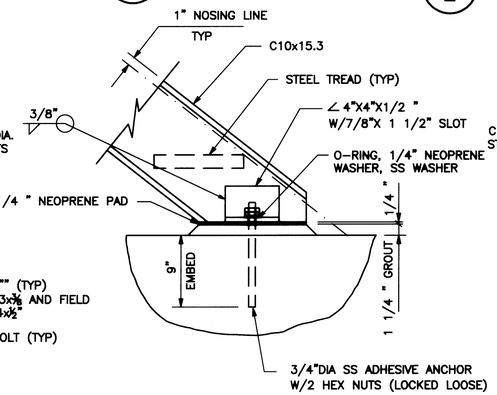

DETAIL 7
SCALE: NONE

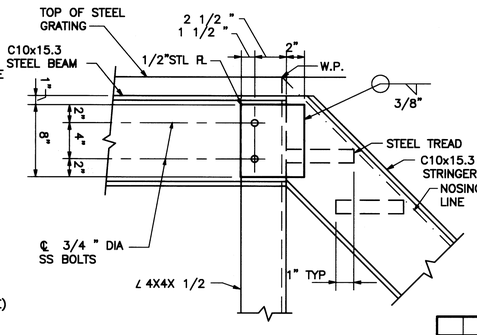

DETAIL 8
SCALE: NONE

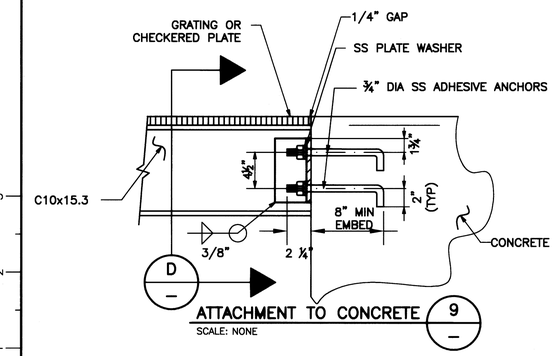

ATTACHMENT TO CONCRETE 9
SCALE: NONE

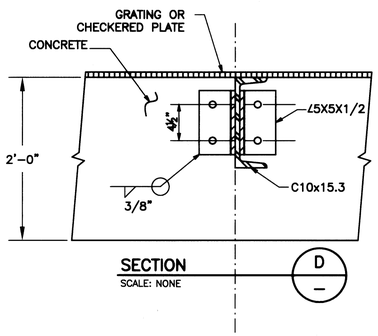

SECTION D
SCALE: NONE

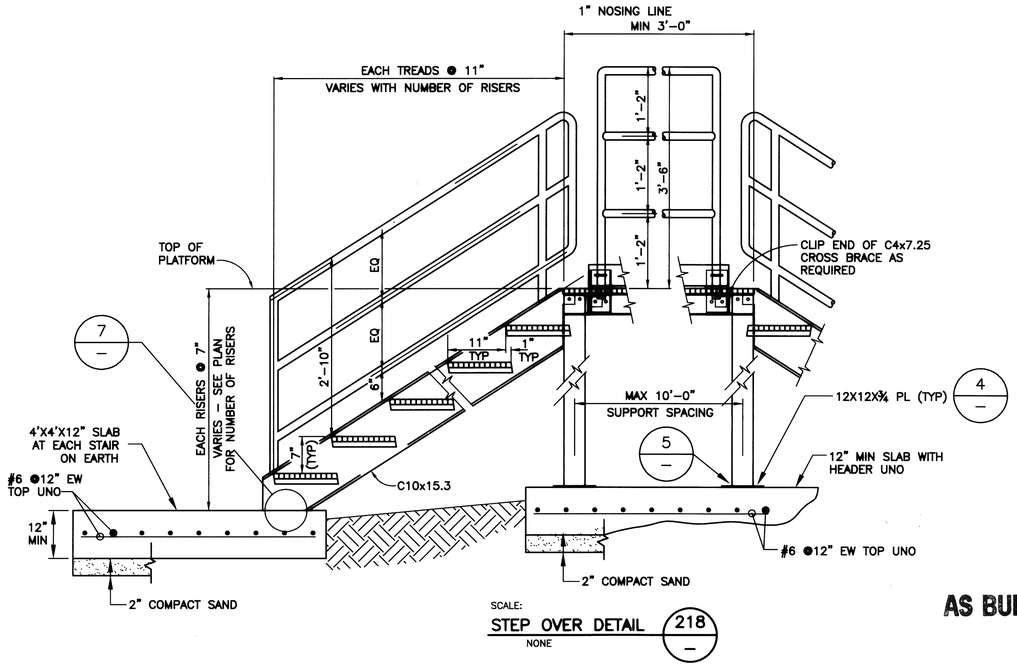

SCALE:
STEP OVER DETAIL 218
NONE

AS BUILT

No.	Date	Revisions	App.

STATE OF TEXAS
ROGER C. BROWN
52635
LICENSED PROFESSIONAL ENGINEER
2-12-08

klotz associates

Binkley & Barfield
consulting engineers
1710 Seamist Drive
Houston, Texas 77008-3189
(713) 869-3433

SURVEYED BY: GEOSOLUTIONS | FIELD BOOK NO. : N/A

CITY OF HOUSTON
DEPARTMENT OF PUBLIC WORKS AND ENGINEERING

ALMEDA SIMS WWTP & SPF IMPROVEMENTS PACKAGE I

STAIR DETAILS

FILE NO:	WW4903
WBS:	R-000298-0004-4
DRAWING SCALE	NONE
CITY OF HOUSTON PM	IRAJ RANJBAR, P.E.
DWG NO. :	D-101
SHEET NO.	23 OF 109

PUBLIC WORKS AND ENGINEERING
INSPECTED & FILED
44488
CITY DRAWING NUMBER
HOUSTON, TEXAS

COLOR TABLE: ENVIRO-RD.ctb G:\115800 Almeda\CADD_D-101 Stair Details.dwg Feb 11,2008 - 3:42pm mjd

ORIGINAL SCALE IN INCHES FOR REDUCED PLANS
0 1 2 3

G:\115800 Almeda\CADD_D-102 StandardPipeHangerDetails.dwg Feb 11,2008 - 3:42pm mjd
COLOR TABLE: ENVIRO-RD.ctb
BASE DRAWING FILE NAME:DWGFILENAME
DATE LAST MODIFIED:DATE
PC3 file used:PC3
ORIGINAL SCALE IN INCHES
FOR REDUCED PLANS
0 1 2

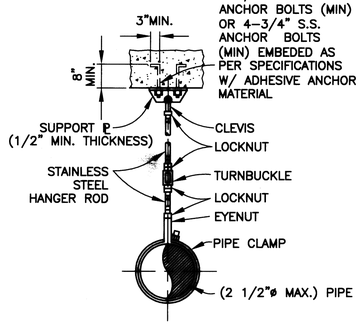

PIPE HANGER DETAILS 220 –

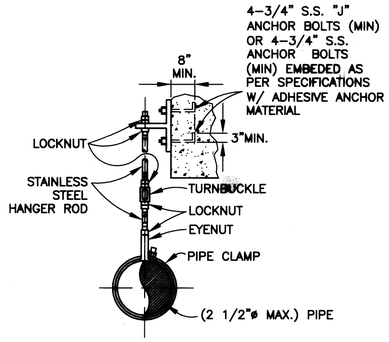

PIPE HANGER DETAILS 221 –

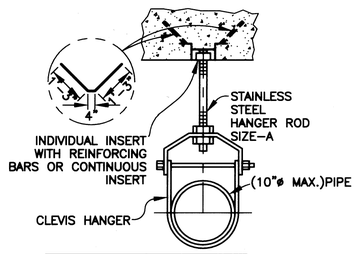

PIPE SIZE	A HANGER ROD
2"& SMALLER	3/8"
2 1/2"	1/2"
3" THRU 4"	5/8"
6" THRU 10"	3/4"
12"	7/8"

PIPE HANGER DETAILS 222 –

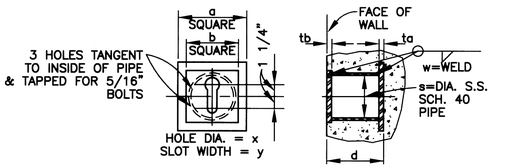

BOLT SIZE	DIMENSIONS IN INCHES								
	a	ta	b	tb	d	s	w	x	y
3/4	7	1/2	5 1/2	3/8	5 1/2	4	1/4	1 7/16	7/8
7/8	9	5/8	7	3/4	7 1/2	5	3/8	1 13/16	1
1	9	5/8	7	3/4	7 1/2	5	3/8	1 13/16	1 1/8
1 1/8	11	7/8	8	3/4	9	6	3/8	2 1/4	1 1/4
1 1/4	11	7/8	8	3/4	9	6	3/8	2 1/4	1 3/8

PIPE HANGER DETAILS 223 –

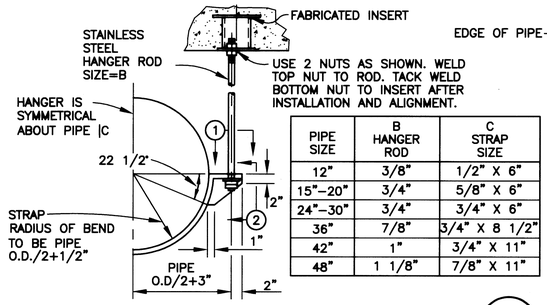

PIPE SIZE	B HANGER ROD	C STRAP SIZE
12"	3/8"	1/2" X 6"
15"–20"	3/4"	5/8" X 6"
24"–30"	3/4"	3/4" X 6"
36"	7/8"	3/4" X 8 1/2"
42"	1"	3/4" X 11"
48"	1 1/8"	7/8" X 11"

PIPE HANGER DETAILS 224 –

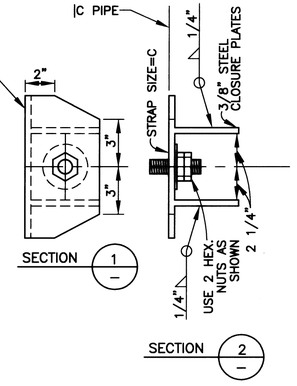

NOTES:

1. EXCEPT WHERE SPECIFICALLY SHOWN OTHERWISE, DETAILS ON THIS SHEET APPLY TO THE ENTIRE SET OF DRAWINGS, WHETHER SPECIFICALLY REFERENCED OR NOT.
2. SUPPORT SPACING SHALL BE AS PER SPECIFICATIONS.

AS BUILT

No.	Date	Revisions	App.

STATE OF TEXAS
ROGER C. BROWN
52635
LICENSED
PROFESSIONAL ENGINEER
2-12-08

klotz associates

Binkley & Barfield
consulting engineers
1710 Seamist Drive
Houston, Texas 77008-3189
(713) 869-3433

SURVEYED BY: GEOSOLUTIONS | FIELD BOOK NO. : N/A

CITY OF HOUSTON
DEPARTMENT OF PUBLIC WORKS AND ENGINEERING

ALMEDA SIMS WWTP & SPF IMPROVEMENTS PACKAGE I

STANDARD PIPE HANGER DETAILS

FILE NO:	WW4903
WBS: R–000298–0004–4	
DRAWING SCALE	
N.T.S.	
CITY OF HOUSTON PM	
IRAJ RANJBAR, P.E.	
DWG NO. :	D–102
SHEET NO. 24 OF 109	

ACCEPTED & FILED
444884
CITY DRAWING NUMBER

COLOR TABLE: ENVIRO-RD.ctb G:\115800 Almeda\CADD_D-103 StandardPipeSupportDetails.dwg Feb 11,2008 - 3:42pm mjd
BASE DRAWING FILE NAME: DWGFILENAME
DATE LAST MODIFIED: DATE
PCS file used: PC3
ORIGINAL SCALE IN INCHES FOR REDUCED PLANS
0 1 2

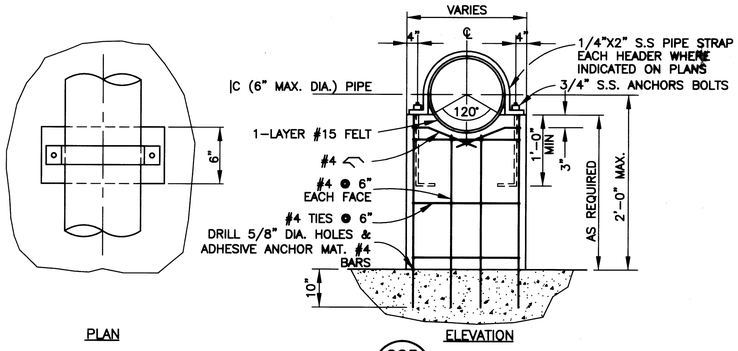

PIPE SUPPORT DETAIL 225 –

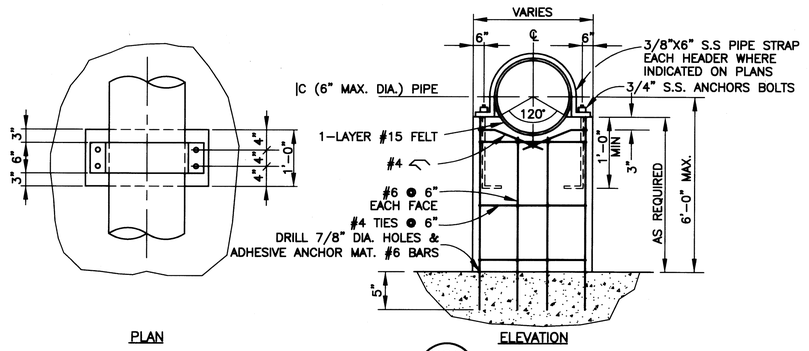

PIPE SUPPORT DETAIL 226 –

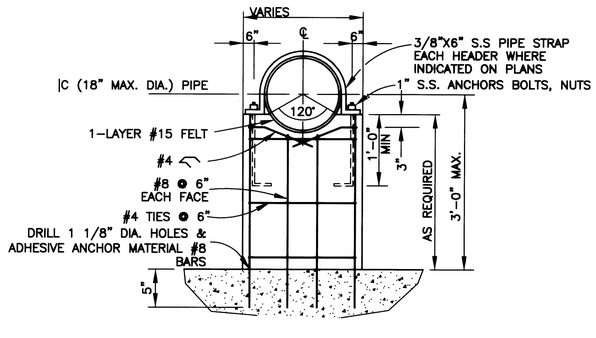

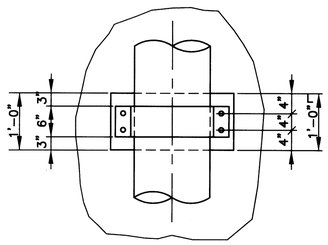

PIPE SUPPORT DETAIL 227 –

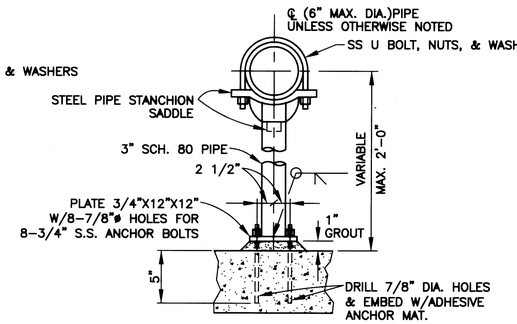

NOTE: HOT DIP GALV. AFTER FABRICATION AND RECEIVE PROTECTIVE COATING SEE DETAIL 218 FOR REBAR

TYPICAL PIPE SUPPORT DETAIL 228 –

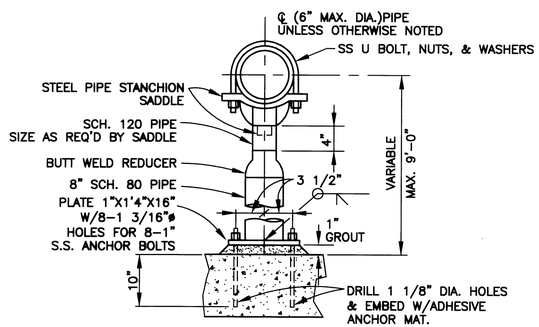

NOTE: HOT DIP GALV. AFTER FABRICATION AND RECEIVE PROTECTIVE COATING SEE DETAIL 218 FOR REBAR

TYPICAL PIPE SUPPORT DETAIL 229 –

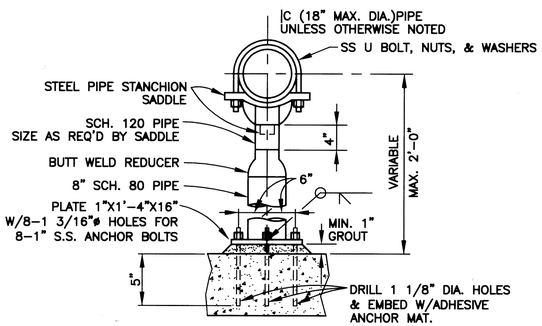

NOTE: HOT DIP GALV. AFTER FABRICATION AND RECEIVE PROTECTIVE COATING SEE DETAIL 218 FOR REBAR

TYPICAL PIPE SUPPORT DETAIL 230 –

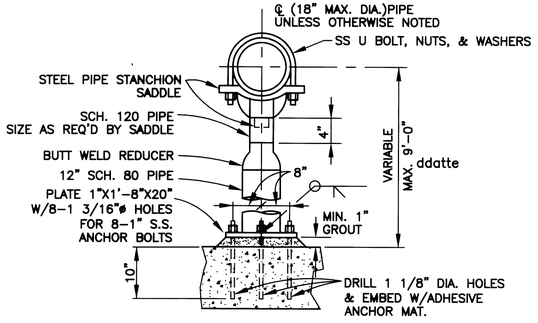

NOTE: HOT DIP GALV. AFTER FABRICATION AND RECEIVE PROTECTIVE COATING SEE DETAIL 218 FOR REBAR

TYPICAL PIPE SUPPORT DETAIL 231 –

NOTES:

1. EXCEPT WHERE SPECIFICALLY SHOWN OTHERWISE, DETAILS ON THIS SHEET APPLY TO THE ENTIRE SET OF DRAWINGS, WHETHER SPECIFICALLY REFERENCED OR NOT.
2. SUPPORT SPACING SHALL BE AS PER SPECIFICATIONS.

No.	Date	Revisions	App.

STATE OF TEXAS
ROGER C. BROWN
52635
LICENSED PROFESSIONAL ENGINEER
2-12-08

klotz associates

Binkley & Barfield
consulting engineers
1710 Seamist Drive
Houston, Texas 77008-3189
(713) 869-3433

SURVEYED BY: GEOSOLUTIONS | FIELD BOOK NO. : N/A

CITY OF HOUSTON
DEPARTMENT OF PUBLIC WORKS AND ENGINEERING

ALMEDA SIMS WWTP & SPF IMPROVEMENTS PACKAGE I

STANDARD PIPE SUPPORT DETAILS

FILE NO:	WW4903
WBS:	R-000298-0004-4
DRAWING SCALE	N.T.S.
CITY OF HOUSTON PM	IRAJ RANJBAR, P.E.
DWG NO. :	D-103
SHEET NO.	25 OF 109

ACCEPTED & FILED
44488
CITY DRAWING NUMBER
HOUSTON, TEXAS

ddatte

AS BUILT

COLOR TABLE: ENVIRO-RD.ctb G:\115800 Almeda\CADD_D-104 MiscellaneousStandardDetails.dwg Feb 11,2008 - 3:41pm mjd
BASE DRAWING FILE NAME: DWGFILENAME
DATE LAST MODIFIED: DATE
PC3 file used: PC3
ORIGINAL SCALE IN INCHES FOR REDUCED PLANS
0 1 2

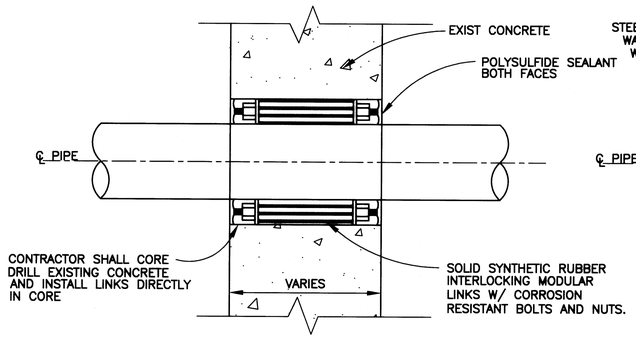

CONCRETE WALL PENETRATION (EXISTING) 240
SCALE: NONE

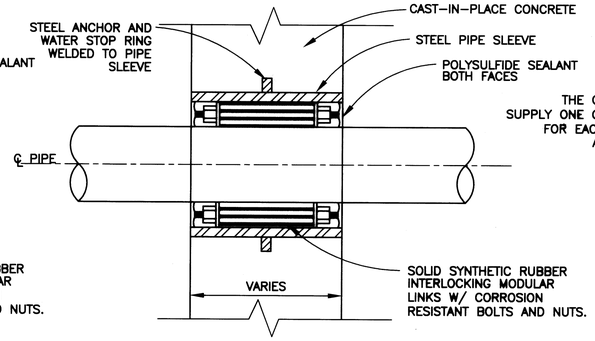

CONCRETE WALL PENETRATION (NEW) 241
SCALE: NONE

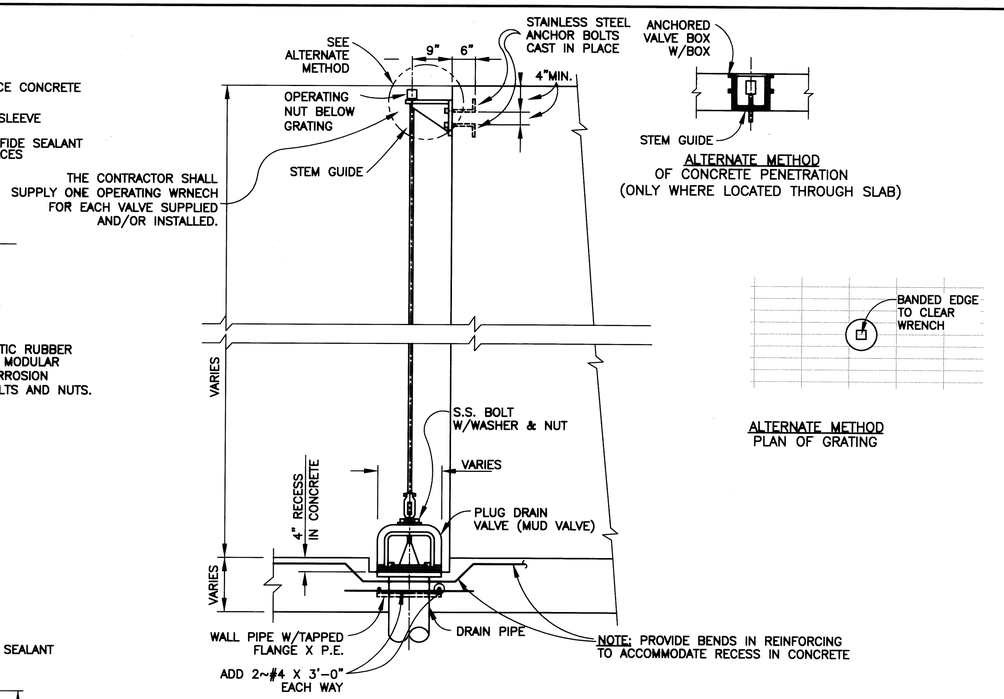

TYPICAL MUD VALVE DETAIL 242
SCALE: NONE

ALTERNATE METHOD
OF CONCRETE PENETRATION
(ONLY WHERE LOCATED THROUGH SLAB)

ALTERNATE METHOD
PLAN OF GRATING

NOTES:

1. EXCEPT WHERE SPECIFICALLY SHOWN OTHERWISE, DETAILS ON THIS SHEET APPLY TO THE ENTIRE SET OF DRAWINGS, WHETHER SPECIFICALLY REFERENCED OR NOT.

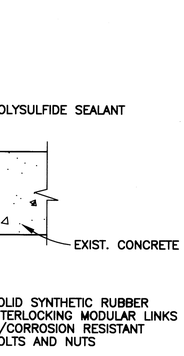

SLEEVE DETAIL 243
SCALE: NONE

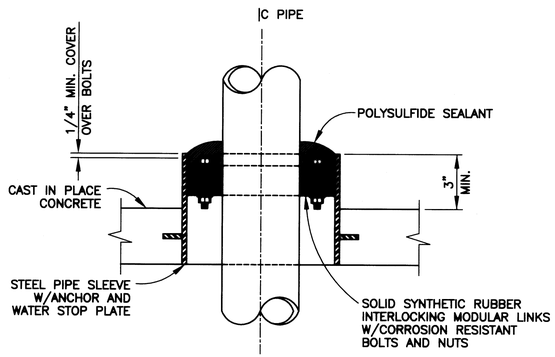

SLEEVE DETAIL 244
SCALE: NONE

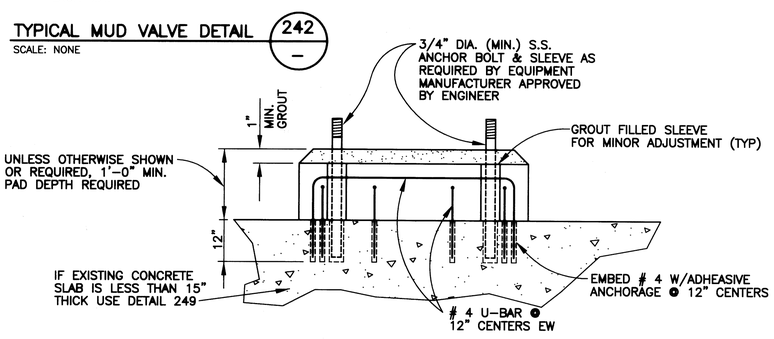

TYPICAL EQUIPMENT BASE DETAIL 248
SCALE: NONE

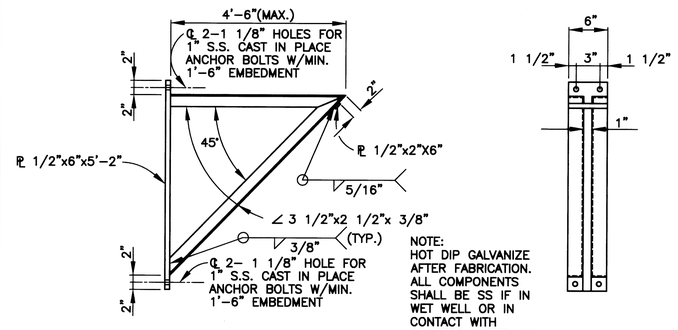

NOTE:
HOT DIP GALVANIZE AFTER FABRICATION. ALL COMPONENTS SHALL BE SS IF IN WET WELL OR IN CONTACT WITH PROCESS WATER OR WITHIN 2' OF ANY HIGH WATER LEVEL

WALL BRACKET DETAIL 245
SCALE: NONE

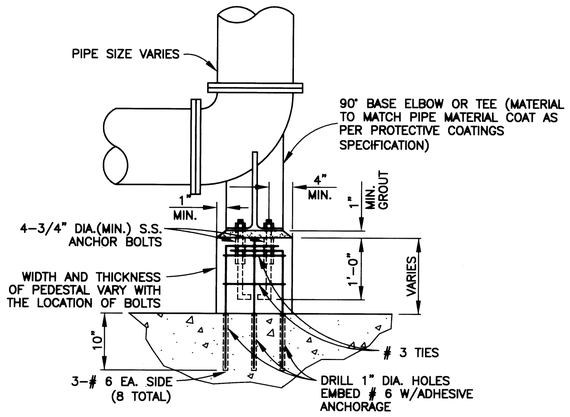

PIPE SUPPORT DETAIL 247
SCALE: NONE

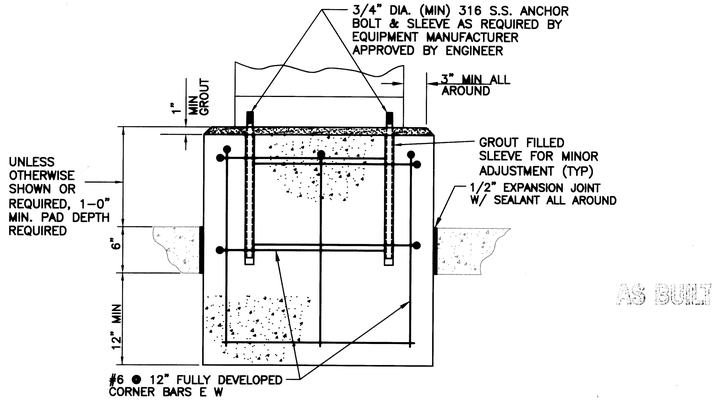

AS BUILT

EQUIPMENT PAD DETAIL 249
SCALE: NONE

No.	Date	Revisions	App.

STATE OF TEXAS
ROGER C. BROWN
52635
LICENSED PROFESSIONAL ENGINEER
4-12-08

klotz associates

Binkley & Barfield
consulting engineers
1710 Seamist Drive
Houston, Texas 77008-3189
(713) 869-3433

SURVEYED BY: GEOSOLUTIONS | FIELD BOOK NO. : N/A

CITY OF HOUSTON
DEPARTMENT OF PUBLIC WORKS AND ENGINEERING

ALMEDA SIMS WWTP & SPF IMPROVEMENTS PACKAGE I

MISCELLANEOUS STANDARD DETAILS

FILE NO:	WW4903
WBS:	R-000298-0004-4
DRAWING SCALE	N.T.S.
CITY OF HOUSTON PM	IRAJ RANJBAR, P.E.
DWG NO. :	D-104
SHEET NO.	26 OF 109

PUBLIC WORKS AND ENGINEERING
ACCEPTED & FILED
44884
CITY DRAWING NUMBER
HOUSTON, TEXAS

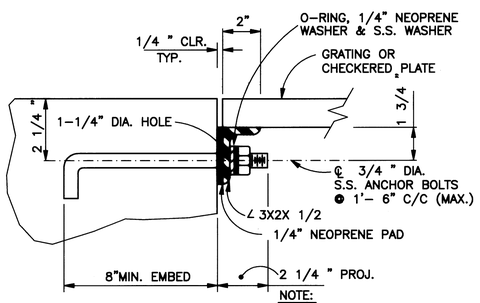

LEDGER ANGLE DETAIL 250

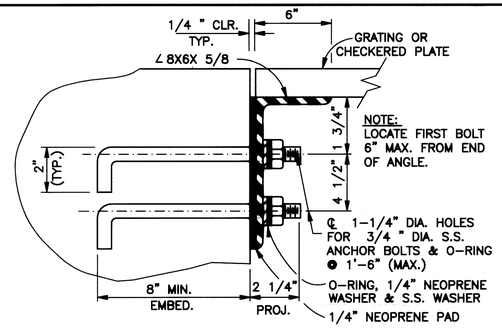

LEDGER HEAVY ANGLE DETAIL 251

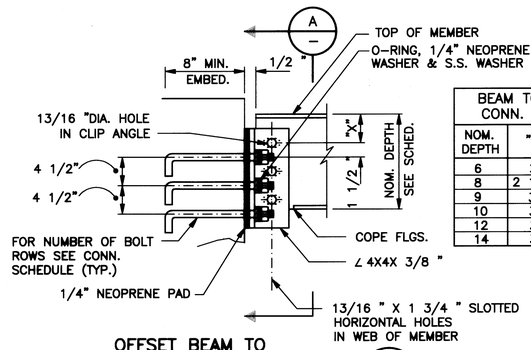

OFFSET BEAM TO CONCRETE CONNECTION 252

BEAM TO CONCRETE CONN. SCHEDULE

NOM. DEPTH	"X"	NUMBER OF BOLT ROWS
6	2"	2
8	2 1/2"	2
9	3"	2
10	3"	2
12	3"	3
14	3"	3

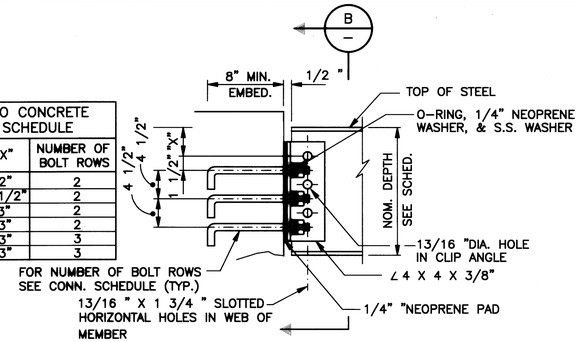

BEAM TO CONCRETE CONNECTION 253

NOTES:

1. EXCEPT WHERE SPECIFICALLY SHOWN OTHERWISE. DETAILS ON THIS SHEET APPLY TO THE ENTIRE SET OF DRAWINGS, WHETHER SPECIFICALLY REFERENCED OR NOT.
2. USE 3/4" DIA. S.S. ANCHORS EPOXY/VINYL ESTER SET FOR EXISTING CONCRETE.

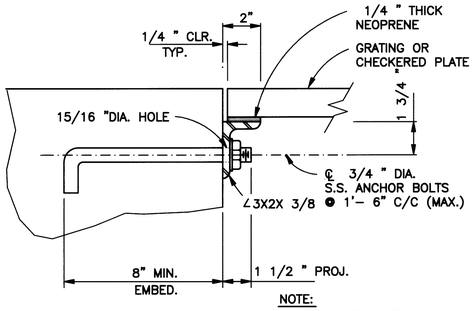

LEDGER ANGLE W/NEOPRENE DETAIL 254

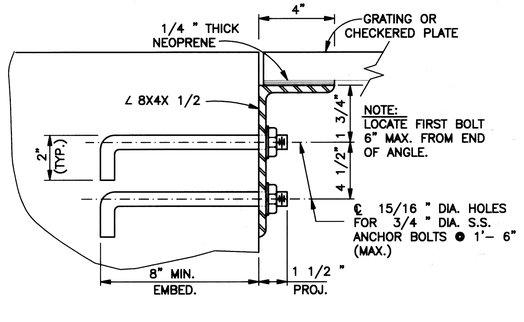

HEAVY LEDGER ANGLE W/NEOPRENE DETAIL 255

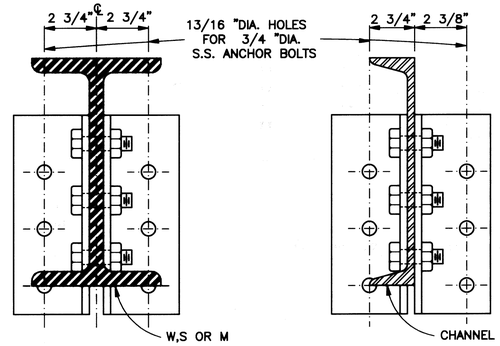

SECTION A

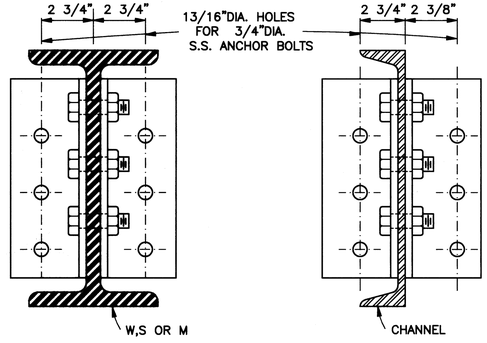

SECTION B

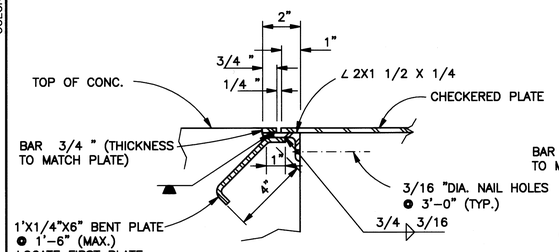

CURB ANGLE DETAIL 256

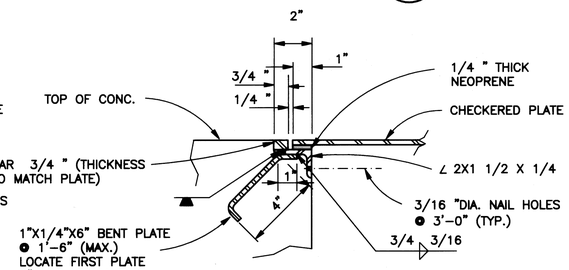

CURB ANGLE W/NEOPRENE DETAIL 257

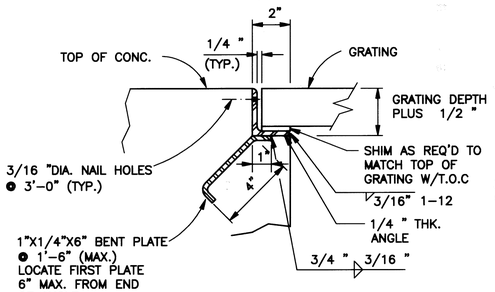

CURB ANGLE DETAIL 258

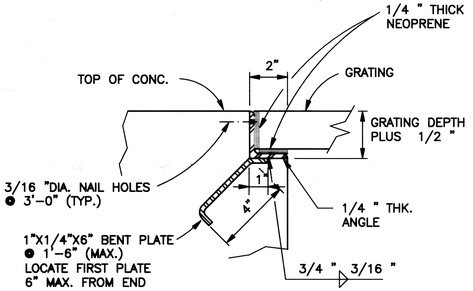

CURB ANGLE W/NEOPRENE DETAIL 259

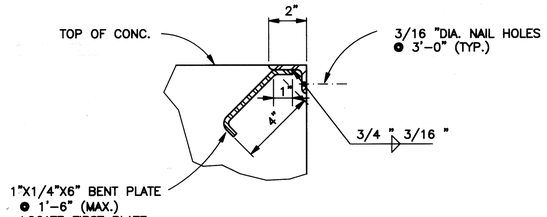

NOSING ANGLE DETAIL 260

AS BUILT

No.	Date	Revisions	App.

STATE OF TEXAS — ROGER C. BROWN — 52635 — LICENSED PROFESSIONAL ENGINEER — 2-12-08

klotz associates

Binkley & Barfield consulting engineers
1710 Seamist Drive
Houston, Texas 77008-3189
(713) 869-3433

SURVEYED BY: GEOSOLUTIONS | FIELD BOOK NO. : N/A

CITY OF HOUSTON
DEPARTMENT OF PUBLIC WORKS AND ENGINEERING

ALMEDA SIMS WWTP & SPF IMPROVEMENTS PACKAGE I

STANDARD STRUCTURAL DETAILS

FILE NO:	WW4903
WBS:	R-000298-0004-4
DRAWING SCALE	
N.T.S.	
CITY OF HOUSTON PM	
IRAJ RANJBAR, P.E.	
DWG NO. :	D-105
SHEET NO.	27 OF 109

ACCEPTED & FILED — 444884 — CITY DRAWING NUMBER — HOUSTON, TEXAS

COLOR TABLE: ENVIRO-RD.ctb G:\115800 Almeda\CADD_D-105 StandardStructuralDetails.dwg Feb 11,2008 - 3:41pm mjd
ORIGINAL SCALE IN INCHES FOR REDUCED PLANS 0 1 2 3

COLOR TABLE: ENVIRO-RD.ctb
G:\115800 Almeda\CADD_D-106 StandardStructuralDetailsHandrails.dwg Feb 11,2008 - 3:41pm mjd

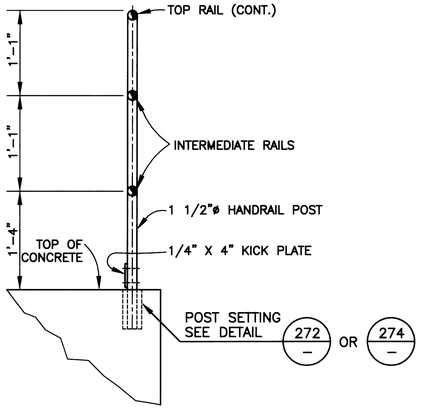

TYPICAL HANDRAIL POST W/O CURB DETAIL — 270

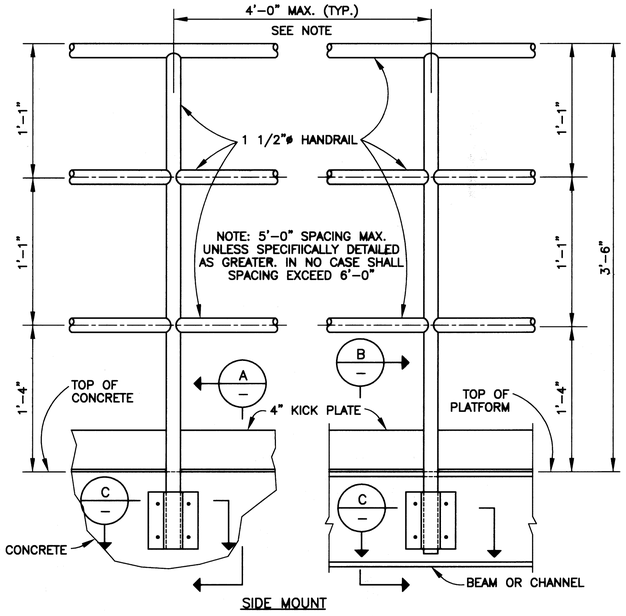

SIDE MOUNT

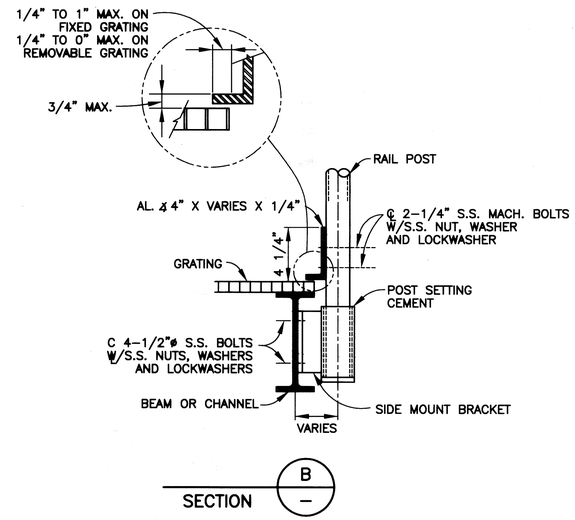

SECTION B

NOTES:

1. EXCEPT WHERE SPECIFICALLY SHOWN OTHERWISE, DETAILS ON THIS SHEET APPLY TO THE ENTIRE SET OF DRAWINGS, WHETHER SPECIFICALLY REFERENCED OR NOT.
2. COMPONENT OF HANDRAIL MAY BE ALUMINUM OR 316 SS, UNLESS MATERIAL IS SPECIFICALLY IDENTIFIED.

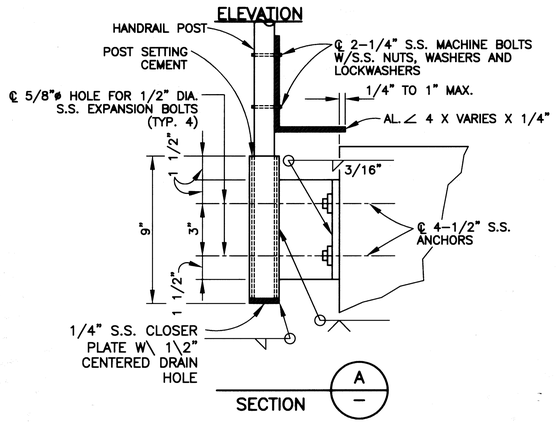

SECTION A

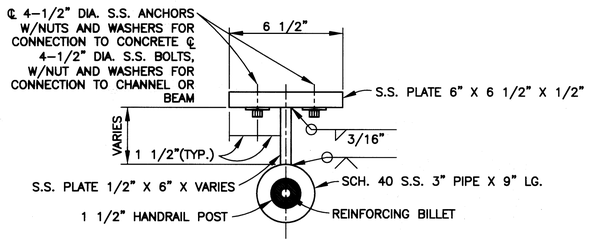

HANDRAIL SIDE MOUNT DETAIL — C

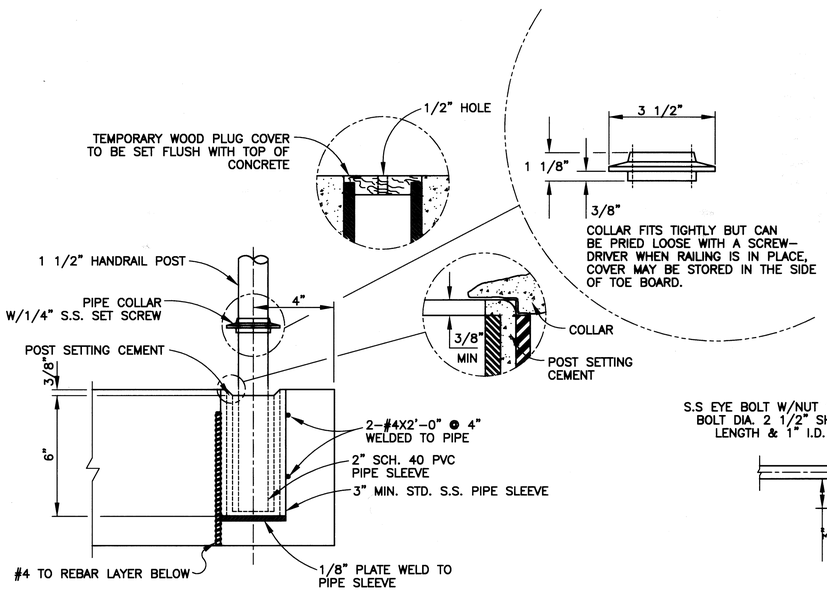

REMOVABLE HANDRAIL POST SETTING DETAIL — 272

TYPICAL SIDE MOUNT HANDRAIL DETAIL — 271

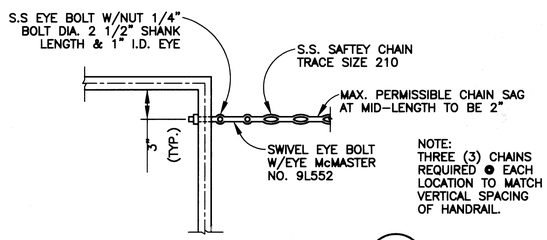

TYPICAL SAFETY CHAIN DETAIL — 273

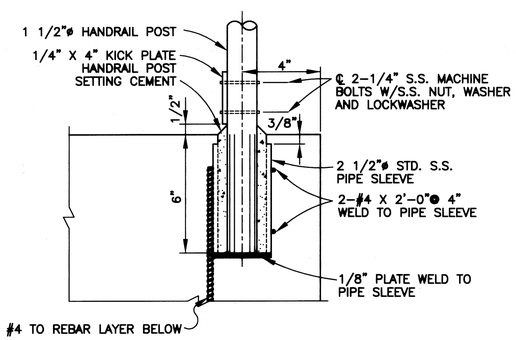

POST SETTING DETAIL — 274

AS BUILT

No.	Date	Revisions	App.

STATE OF TEXAS — ROGER C. BROWN — 52635 — LICENSED PROFESSIONAL ENGINEER — 2-13-08

klotz associates

Binkley & Barfield consulting engineers
1710 Seamist Drive
Houston, Texas 77008-3189
(713) 869-3433

SURVEYED BY: GEOSOLUTIONS | FIELD BOOK NO. : N/A

CITY OF HOUSTON
DEPARTMENT OF PUBLIC WORKS AND ENGINEERING

ALMEDA SIMS WWTP & SPF IMPROVEMENTS PACKAGE I

STANDARD STRUCTURAL DETAILS HANDRAILS

FILE NO:	WW4903
WBS: R-000298-0004-4	
DRAWING SCALE	
N.T.S.	
CITY OF HOUSTON PM	
IRAJ RANJBAR, P.E.	
DWG NO. :	D-106
SHEET NO. 28 OF 109	

PUBLIC WORKS AND ENGINEERING — ACCEPTED & FILED — 444884 — CITY DRAWING NUMBER — HOUSTON, TEXAS

ORIGINAL SCALE IN INCHES FOR REDUCED PLANS
0 1 2 3

J:\0620.002.000\07.00 CADD\Package 1\Standard Details\STRUCTURAL.dwg Feb 08,2008 - 8:50am ramirezm

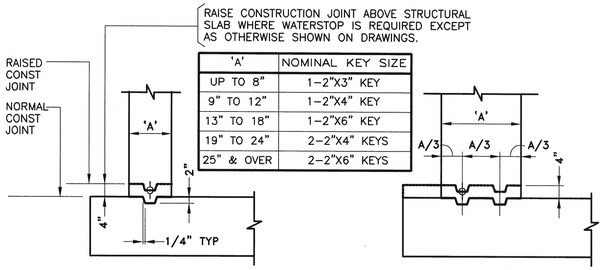

'A'	NOMINAL KEY SIZE
UP TO 8"	1-2"X3" KEY
9" TO 12"	1-2"X4" KEY
13" TO 18"	1-2"X6" KEY
19" TO 24"	2-2"X4" KEYS
25" & OVER	2-2"X6" KEYS

NUMBER AND SIZE OF KEYS SHOWN APPLY TO JOINTS IN SLABS AND TO BOTH VERTICAL AND HORIZONTAL JOINTS IN WALLS EXCEPT AS OTHERWISE NOTED ON DRAWINGS.

CONSTRUCTION JOINT KEY DETAILS

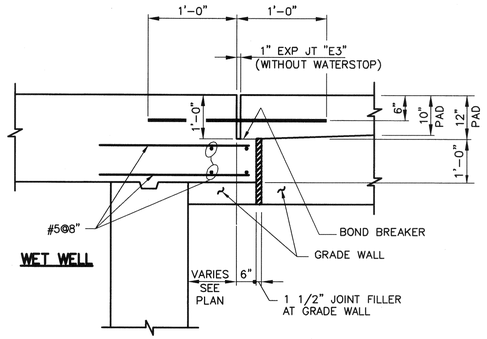

TYPICAL EXPANSION JOINT
(BETWEEN WET WELL AND VALVE PAD)

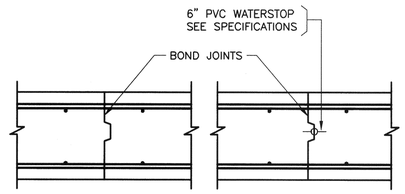

IN JOINTS WITH MORE THAN ONE KEY, PLACE WATERSTOP IN KEY NEAREST TO SURFACE AGAINST EARTH OR WATER.

REINFORCING STEEL IS CONTINUOUS THROUGH CONSTRUCTION JOINT.

TYPE C1 **TYPE C2**

CONSTRUCTION JOINTS

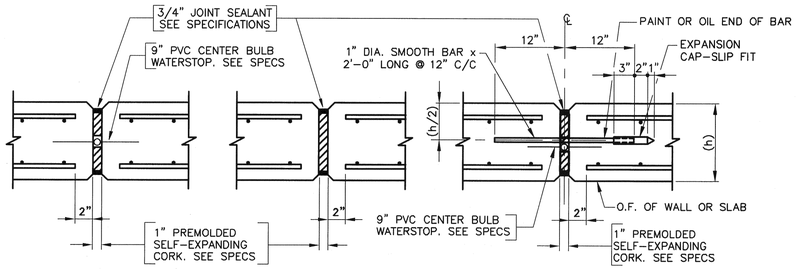

CHAMFER EXPANSION JOINTS IN WALLS AND CEILINGS FOR FLOOR JOINTS USE EDGER INSTEAD OF CHAMFERING

TYPE "E1" **TYPE "E2"** **TYPE "E3"**

EXPANSION JOINTS

LD=TENSILE DEVELOPMENT LENGTH FOR REINF BARS WITH FY = 60 KSI	
BAR SIZE	TENSION DEVELOPMENT LENGTH 'LD' INCHES
3	12
4	12
5	15
6	19
7	26
8	35
9	44
10	56
11	68

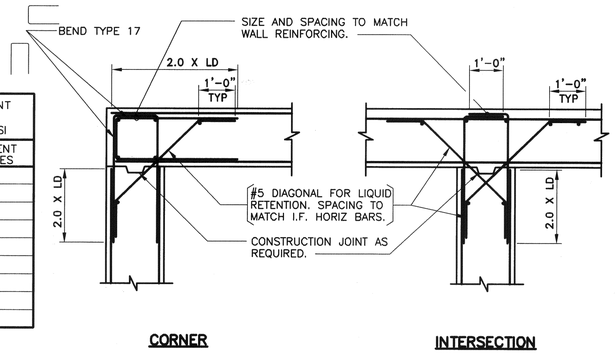

CORNER **INTERSECTION**

TYPICAL DETAILS OF WALL REINFORCEMENT

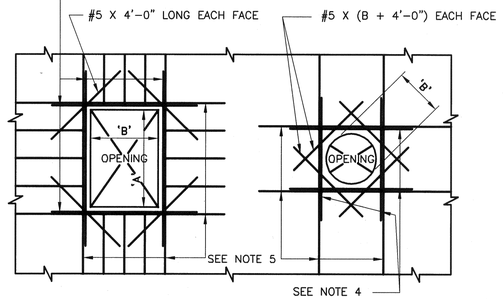

ADDITIONAL REINFORCING STEEL AT OPENINGS IN WALLS AND SLABS

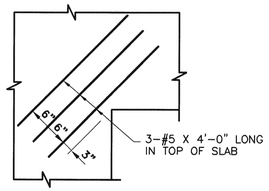

SPECIAL REINFORCEMENT TO BE PLACED AT ALL INSIDE CORNERS IN SLABS OR WALKWAYS.

SLAB DETAIL AT RE - ENTRANT CORNER

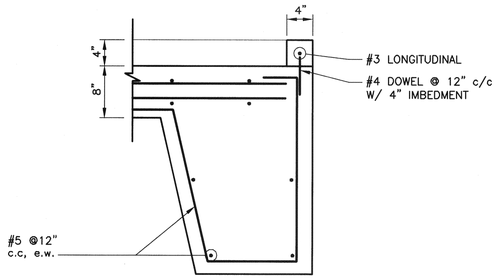

TYPICAL CURB DETAIL AT PUMP STATIONS

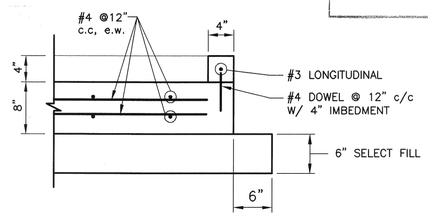

TYPICAL CURB DETAIL AT METERING STATION

RECORD DRAWING

THE CONSTRUCTION CONTRACTOR RECORDED CHANGES MADE DURING CONSTRUCTION ON PRINTS OF THE CONTRACT DRAWINGS.

KLOTZ ASSOCIATES, INC. HAS CREATED THIS RECORD DRAWING BY POSTING THE INFORMATION SUBMITTED BY THE CONTRACTOR ON THE ORIGINALS OF THE CONTRACT DRAWINGS. ATTESTED BY:

SIGNATURE:
NAME: RALPH E. COX, P.E.
DATE: 12/02/11

No.	Date	Revisions	App.

STATE OF TEXAS
JOE FRANK POTTER
36347
REGISTERED PROFESSIONAL ENGINEER
Joe F. Potter, P.E.
12/11/08

klotz associates

Binkley & Barfield
consulting engineers
1710 Seamist Drive
Houston, Texas 77008-3189
(713) 869-3433

SURVEYED BY: GEOSOLUTIONS | FIELD BOOK NO. : N/A

CITY OF HOUSTON
DEPARTMENT OF PUBLIC WORKS AND ENGINEERING

ALMEDA SIMS WWTP & SPF IMPROVEMENTS PACKAGE I

STANDARD STRUCTURAL DETAILS (SHEET 1)

FILE NO:	WW4903
WBS:	000298-0004-4
DRAWING SCALE	NONE
CITY OF HOUSTON PM	IRAJ RANJBAR, P.E.
DWG NO. :	D-107
SHEET NO.	29 OF 109

PUBLIC WORKS AND ENGINEERING ACCEPTED & FILED
44488
CITY DRAWING NUMBER
HOUSTON, TEXAS

COLOR TABLE:

ORIGINAL SCALE IN INCHES FOR REDUCED PLANS
0 1 2 3

J:\0620.002.000\07.00 CADD\Package 1\Standard Details\STRUCTURAL.dwg Feb 11,2008 - 7:17am lewiss

NOTE ◇

1. DO NOT USE EXPANSION ANCHORS NOR ADHESIVE ANCHORS.

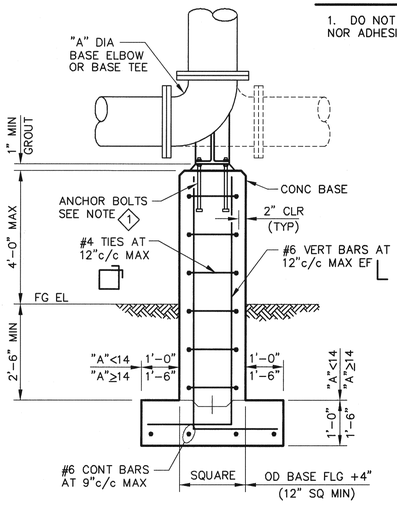

DIMENSIONS IN INCHES	
ELBOW "A" DIA	"E" DIA
4	5/8
6	5/8
8	5/8
10	5/8
12	3/4
14	3/4
16	3/4
18	3/4
20	3/4
24	3/4
30	7/8
36	7/8
42	1
48	1 1/8

NOTE:

1. (4) GALVANIZED "E" DIA ANCHOR BOLTS WITH (2) HEX NUTS & WASHERS FOR LEVELING AFTER INSTALLATION. 10" EMBEDMENT

CONCRETE BASE ELBOW SUPPORT ON SOIL — 1 / —
N.T.S.

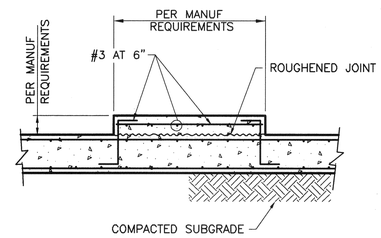

EQUIPMENT PAD DETAIL — 2 / —
N.T.S.

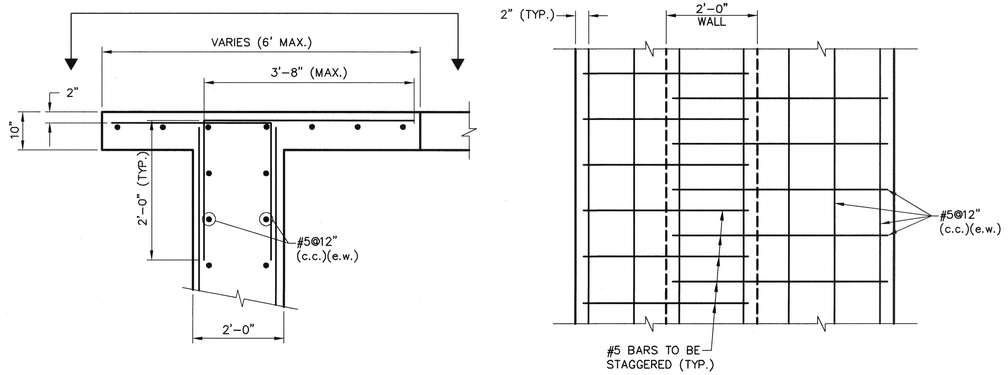

WALKWAY AT TOP OF SLUDGE HOLDING TANK — 3 / —
N.T.S.

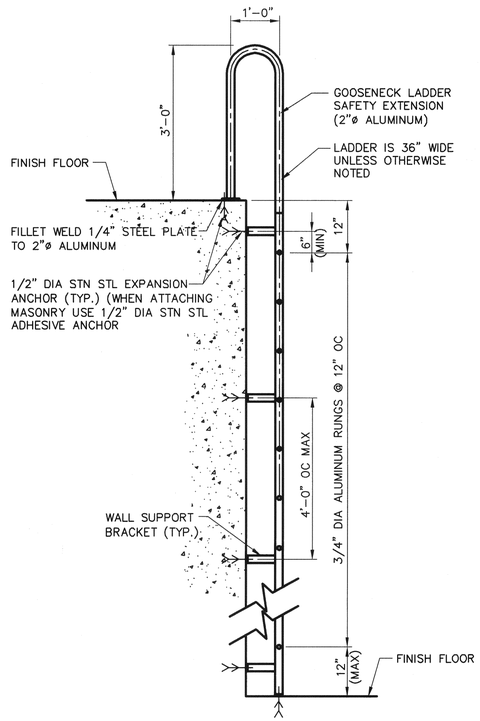

VERTICAL WALL LADDER — 4 / —
N.T.S.

RECORD DRAWING

THE CONSTRUCTION CONTRACTOR RECORDED CHANGES MADE DURING CONSTRUCTION ON PRINTS OF THE CONTRACT DRAWINGS.

KLOTZ ASSOCIATES, INC. HAS CREATED THIS RECORD DRAWING BY POSTING THE INFORMATION SUBMITTED BY THE CONTRACTOR ON THE ORIGINALS OF THE CONTRACT DRAWINGS, ATTESTED BY:

SIGNATURE:
NAME: RALPH E. COX, P.E.
DATE: 12/02/11

No.	Date	Revisions	App.

STATE OF TEXAS — JOE FRANK POTTER — 36347 — REGISTERED PROFESSIONAL ENGINEER
Joe Frank Potter, P.E. 02/11/08

klotz associates

Binkley & Barfield consulting engineers
1710 Seamist Drive
Houston, Texas 77008-3189
(713) 869-3433

SURVEYED BY: GEOSOLUTIONS | FIELD BOOK NO. : N/A

CITY OF HOUSTON
DEPARTMENT OF PUBLIC WORKS AND ENGINEERING

ALMEDA SIMS WWTP & SPF IMPROVEMENTS PACKAGE I

STANDARD STRUCTURAL DETAILS (SHEET 2)

FILE NO:	WW4903
WBS:	000298-0004-4
DRAWING SCALE	NONE
CITY OF HOUSTON PM	IRAJ RANJBAR, P.E.
DWG NO. :	D-108
SHEET NO.	30 OF 109

PUBLIC WORKS AND ENGINEERING — ACCEPTED & FILED — 44488 — CITY DRAWING NUMBER — HOUSTON, TEXAS

COLOR TABLE:

ORIGINAL SCALE IN INCHES FOR REDUCED PLANS
0 1 2 3

J:\0620.002.000\07.00 CADD\Package 1\Standard Details\MECHANICAL.dwg Feb 11,2008 - 9:44am lewiss

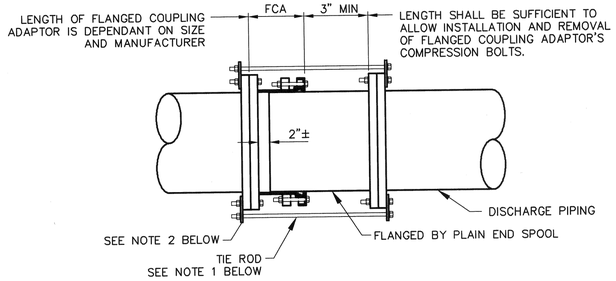

NOTES:

1. PROVIDE A NUMBER OF TIE RODS EQUAL TO 1/2 THE NUMBER OF FLANGE BOLTS. EVENLY SPACE INSTALLATION OF THE TIE RODS. DIAMETER OF TIE RODS TO BE EQUAL TO THE DIAMETER OF FLANGE BOLTS. LENGTH OF TIE RODS TO BE DETERMINED BY CONTRACTOR BASED ON SIZE AND MANUFACTURER OF FLANGED COUPLING ADAPTOR AND FINAL LENGTH OF SPOOL PIECE.

2. PROVIDE 316 SS TAB FOR ATTACHMENT OF TIE RODS. SIZE TO BE DETERMINED BY CONTRACTOR.

3. CONTRACTOR TO SUBMIT DETAILS DURING SHOP DRAWING SUBMISSION.

4. ALL HARDWARE SHALL BE 316 STAINLESS STEEL. TIE RODS SHOULD BE THREADED.

5. THIS RESTRAINT DOES NOT REPLACE THRUST BLOCKS TO BE PROVIDED AT OTHER LOCATIONS.

RESTRAINED FLANGE COUPLING ADAPTER — 1 / —
N.T.S.

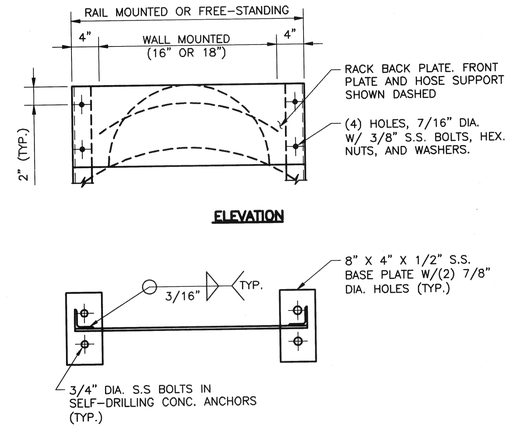

NOTES:
1. WHERE HOSE RACK IS FREE-STANDING, PROVIDE (2) S.S L'S 2 X 2 X 1/4 W/ BASE PLATES.
2. WHERE RAIL MOUNTED SIZE BACK PLATE TO SUIT AND FIX TO RAILS USING S.S U BOLTS.

HOSE RACK RAIL MOUNTED OR FREE STANDING — 2 / —
N.T.S.

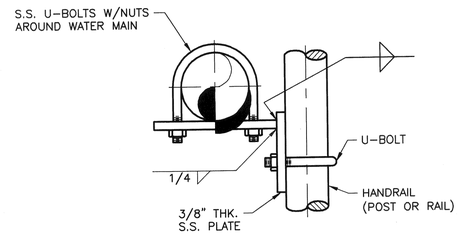

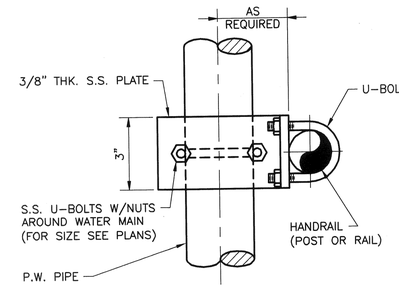

P.W. PIPE SUPPORT OFF HANDRAIL — 3 / —
N.T.S.

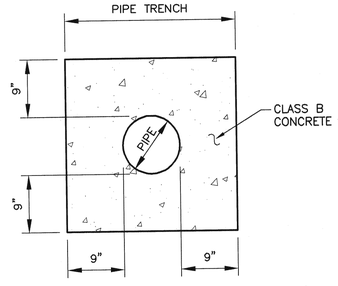

CONCRETE PIPE ENCASEMENT — 4 / —
N.T.S.

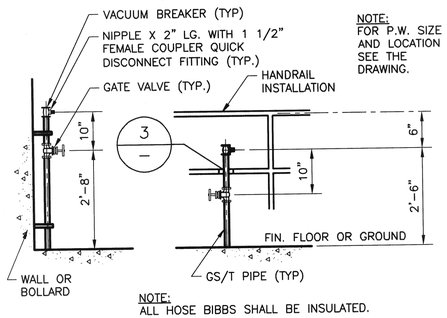

NOTE:
ALL HOSE BIBBS SHALL BE INSULATED.

HOSE BIBB — 5 / —
N.T.S.

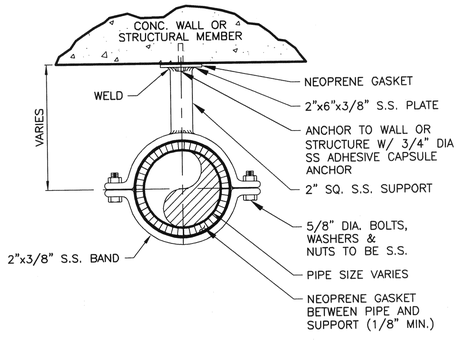

WALL PIPE SUPPORT — 6 / —
N.T.S.

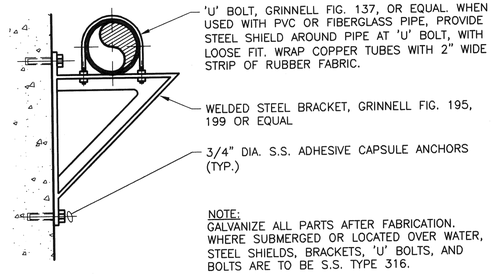

NOTE:
GALVANIZE ALL PARTS AFTER FABRICATION. WHERE SUBMERGED OR LOCATED OVER WATER, STEEL SHIELDS, BRACKETS, 'U' BOLTS, AND BOLTS ARE TO BE S.S. TYPE 316.

WALL PIPE SUPPORT — 7 / —
N.T.S.

RECORD DRAWING

THE CONSTRUCTION CONTRACTOR RECORDED CHANGES MADE DURING CONSTRUCTION ON PRINTS OF THE CONTRACT DRAWINGS.

KLOTZ ASSOCIATES, INC. HAS CREATED THIS RECORD DRAWING BY POSTING THE INFORMATION SUBMITTED BY THE CONTRACTOR ON THE ORIGINALS OF THE CONTRACT DRAWINGS. ATTESTED BY:

SIGNATURE:
NAME: RALPH E. COX, P.E.
DATE: 12/02/11

No.	Date	Revisions	App.

STATE OF TEXAS — RALPH E. COX — 61026 — REGISTERED PROFESSIONAL ENGINEER
2/11/08

klotz associates

Binkley & Barfield consulting engineers
1710 Seamist Drive
Houston, Texas 77008-3189
(713) 869-3433

SURVEYED BY: GEOSOLUTIONS | FIELD BOOK NO. : N/A

CITY OF HOUSTON
DEPARTMENT OF PUBLIC WORKS AND ENGINEERING

ALMEDA SIMS WWTP & SPF IMPROVEMENTS PACKAGE I

STANDARD MECHANICAL DETAILS (SHEET 1)

FILE NO:	WW4903
WBS:	000298-004-3
DRAWING SCALE	NONE
CITY OF HOUSTON PM	IRAJ RANJBAR, P.E.
DWG NO. :	D-109
SHEET NO.	31 OF 109

PUBLIC WORKS AND ENGINEERING — ACCEPTED & FILED — 41488 CITY DRAWING NUMBER — HOUSTON, TEXAS

COLOR TABLE:

ORIGINAL SCALE IN INCHES FOR REDUCED PLANS
0 1 2 3

J:\0620.002.000\07.00 CADD\Package 1\Standard Details\MECHANICAL.dwg Feb 08,2008 - 10:21am lewiss

ELBOW OR TEE 'A' DIA.	DIMENSIONS IN INCHES			
	'B' DIA.	'C' THICK	'D' SQ.	'E' DIA.
4	2	3/8	6	3/8
6	2 1/2	3/8	7	3/8
8	4	1/2	9	3/8
10	4	1/2	9	3/8
12	6	1/2	11	3/4
14	6	1/2	11	3/4
16	6	1/2	11	3/4
18	8	1/2	13 1/2	3/4
20	8	1/2	13 1/2	3/4
24	8	1/2	13 1/2	3/4
30	10	3/4	16	7/8
36	12	3/4	19	7/8
42	16	3/4	23 1/2	1
48	18	3/4	25	1 1/8

NOTE:
MATERIAL FINISH TO MATCH PIPE.

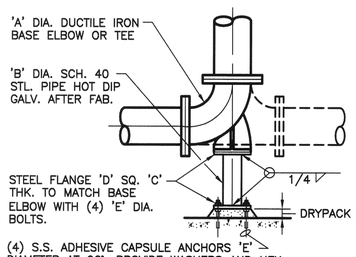

DUCTILE IRON

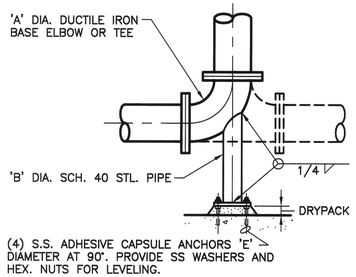

STEEL

ELBOW OR TEE FLOOR SUPPORT

BASE BEND 1
N.T.S.

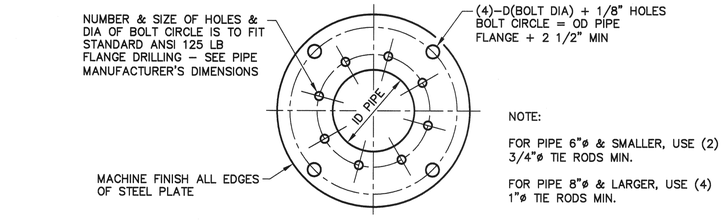

RESTRAINED FLEXIBLE COUPLING 2
N.T.S.

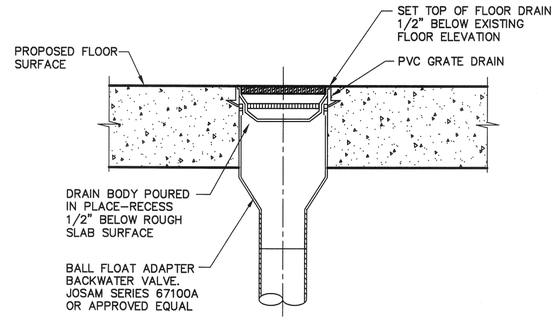

FLOOR DRAIN 3
N.T.S.

RECORD DRAWING

THE CONSTRUCTION CONTRACTOR RECORDED CHANGES MADE DURING CONSTRUCTION ON PRINTS OF THE CONTRACT DRAWINGS.

KLOTZ ASSOCIATES, INC. HAS CREATED THIS RECORD DRAWING BY POSTING THE **INFORMATION** SUBMITTED BY THE **CONTRACTOR** ON THE ORIGINALS OF THE CONTRACT DRAWINGS. ATTESTED BY:

SIGNATURE:
NAME: RALPH E. COX, P.E.
DATE: 12/02/11

No.	Date	Revisions	App.

STATE OF TEXAS
RALPH E. COX
61026
REGISTERED PROFESSIONAL ENGINEER
2/11/08

klotz associates

Binkley & Barfield
consulting engineers
1710 Seamist Drive
Houston, Texas 77008-3189
(713) 869-3433

SURVEYED BY: GEOSOLUTIONS | FIELD BOOK NO. : N/A

CITY OF HOUSTON
DEPARTMENT OF PUBLIC WORKS AND ENGINEERING

ALMEDA SIMS WWTP & SPF IMPROVEMENTS PACKAGE I

STANDARD MECHANICAL DETAILS (SHEET 2)

FILE NO:	WW4903
WBS:	000298-004-3
DRAWING SCALE	NONE
CITY OF HOUSTON PM	IRAJ RANJBAR, P.E.
DWG NO. :	D-110
SHEET NO.	32 OF 109

PUBLIC WORKS AND ENGINEERING
ACCEPTED & FILED
444881
CITY DRAWING NUMBER
HOUSTON, TEXAS

COLOR TABLE:

ORIGINAL SCALE IN INCHES FOR REDUCED PLANS
0 1 2 3

G:\115800 Almeda\CADD_I-100 INSTRUMENTATION LEGEND.dwg Feb 07,2008 - 10:00am swh
ENVIRO-RD.ctb
COLOR TABLE:

INSTRUMENT IDENTIFICATION

EXAMPLE SYMBOLS

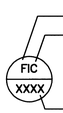

FIRST LETTER(S)
SUCCEEDING LETTERS
INSTRUMENT TAG NUMBER

FIELD MOUNTED INSTRUMENT

REAR-OF-PANEL MOUNTED INSTRUMENT

PANEL MOUNTED INSTRUMENT

DISTRIBUTED CONTROL SYSTEM DISPLAY POINT (COMPUTER NOT USED AS VIDEO DISPLAY)

DISTRIBUTED CONTROL SYSTEM DISPLAY POINT (COMPUTER USED AS VIDEO DISPLAY)

PANEL MOUNTED INSTRUMENT FUNCTION

LOCAL INDICATING LIGHT

* EXISTING INSTRUMENT, RE-USED

VALVE SYMBOLS

GATE, GV

KNIFE GATE, KV

BUTTERFLY, BV

GLOBE, GLV

BALL, BAV

VEE BALL, VBV

PLUG, PV

SEAT PORT

ECCENTRIC PLUG, PV

SWING CHECK, CV

BUTTERFLY CHECK, CV

FLOW CONTROL VALVE

PRESSURE RELIEF, PRV

AIR AND/OR VACUUM RELEASE, AV

MANUAL AIR RELEASE

SAMPLE

DIAPHRAGM

BALL CHECK, BCV

FLAP VALVE, FV

SLUICE OR SLIDE GATE, SG

STOP LOG

TELESCOPIC, TV

ACTUATOR SYMBOLS

ELECTRIC (MOTOR)

SOLENOID

MANUAL

NOTE: ON LOSS OF PRIMARY POWER, XX DENOTES -
FO, FAIL OPEN
FC, FAIL CLOSED
FLP, FAIL TO LAST POSITION

ANALYZER IDENTIFICATION

CL_2	CHLORINE GAS
CL RES	CHLORINE RESIDUAL
CL	TOTAL CHLORINE
NH_3	AMMONIA
pH	pH

EXAMPLE

TRANSDUCERS IDENTIFICATION

E	VOLTAGE	M	SUM
I	CURRENT	P	PNEUMATIC
F	PULSE FREQUENCY		

EXAMPLE

CURRENT TO FREQUENCY TRANSDUCER

INTERFACE SYMBOLS

A, a	INTERFACE LETTER
D-1	DESTINATION DRAWING NO.
S-1	SOURCE DRAWING NO.

INTERFACE TO OR FROM PROCESS EXTERNAL TO PROJECT

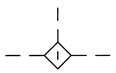

HARDWIRED INTERLOCK LOGIC

PROCESS OR SIGNAL LINE CONTINUATION

ABBREVIATIONS & LETTER SYMBOLS

AC	ALTERNATING CURRENT	NO	NORMALLY OPEN
CL	CLOSE	OC	OPEN-CLOSE
DC	DIRECT CURRENT	OCA	OPEN-CLOSE-AUTO
FR	FORWARD-REVERSE	OCR	OPEN-CLOSE-REMOTE
HOA	HAND-OFF-AUTO	OCS	OPEN-CLOSE-STOP
HOR	HAND-OFF-REMOTE	OO	ON-OFF (MAINTAINED)
LOS	LOCKOUT STOP	OOA	ON-OFF-AUTO
LOR	LOCAL-OFF-REMOTE	OOR	ON-OFF-REMOTE
MA	MANUAL-AUTO	OP	OPEN
MCC-X	MOTOR CONTROL CENTER NO. X	SS	START-STOP (MOMENTARY)
NC	NORMALLY CLOSED	TS	TEST START

FLOW STREAM IDENTIFICATION

CA	CAUSTIC SOLUTION
CL	CHLORINE GAS
CLS	CHLORINE SOLUTION
D	DIESEL
NPW	NONPOTABLE WATER
OF	OVERFLOW
PD	PLANT DRAIN
SW	SURFACE WATER
W	WATER
WW	WELL WATER

PRIMARY ELEMENT SYMBOLS

FLOW TEST POINT

ORIFICE PLATE

ELECTROMAGNETIC FLOWMETER

PROPELLER OR TURBINE METER

PARSHALL FLUME

LEVEL (CAPACITANCE OR ADMITTANCE)

ULTRASONIC FLOWMETER (CLAMP-ON)

LEVEL (ULTRASONIC)

LEVEL (FLOAT)

PITOT - AVERAGING

MISCELLANEOUS SYMBOLS

DISC AERATOR

SIGHT GLASS

DIAPHRAGM SEAL

BLIND FLANGE

AIR GAP

VENT TO ATMOSPHERE

SELF CONTAINED AIR SUPPLY

PURGE SET
X: W = WATER
A = AIR

EXPANSION JOINT

FILTER

INDICATOR LIGHT

SILENCER

FLAME ARRESTOR

MANOMETER

FAN

120 VOLT. 60 HZ POWER

480 VOLT. 60 HZ POWER

4160 VOLT. 60 HZ POWER

FREE VENT

MIXER

ELECTRIC MOTOR

HYDRAULIC MOTOR

FLUSHING CONNECTION
HOSE ADAPTER
UNLESS OTHERWISE NOTED

SEAL WATER SET
SIGHT GLASS
UNLESS OTHERWISE NOTED

HOSE STATION

WYE STRAINER

DRAIN TRAP

FOG SPRAY CONNECTION

WATER SPRAY CONNECTION

PUMP & COMPRESSOR SYMBOLS

CENTRIFUGAL PUMP

GEAR PUMP OR BLOWER (POSITIVE DISPLACEMENT)

EJECTOR

FIRE PUMP

CHEMICAL FEED PUMP

PROGRESSIVE CAVITY PUMP

SUBMERSIBLE PUMP

AIR COMPRESSOR

BLOWER (CENTRIFUGAL)

VERTICAL PUMP

INSTRUMENT IDENTIFICATION LETTERS

	FIRST LETTERS		SUCCEEDING LETTERS		
	MEASURING OR INITIATING VARIABLE	MODIFIER	READOUT OR PASSIVE FUNCTION	OUTPUT FUNCTION	MODIFIER
A	ANALYSIS (+)		ALARM		
B	BURNER, COMBUSTION				
C				CONTROL	
D		DIFFERENTIAL			
E	VOLTAGE		SENSOR (PRIMARY ELEMENT)		
F	FLOW RATE	RATIO (FRACTION)			
G		GAUGE	GLASS, VIEWING DEVICE		
H	HAND				HIGH
I	CURRENT (ELECTRICAL)		INDICATE		
J	POWER	SCAN			
K	TIME, TIME SCHEDULE	TIME RATE OF CHANGE		CONTROL STATION	
L	LEVEL		LIGHT		LOW
M	CHLORINATION	MOMENTARY			MIDDLE, INTERMEDIATE
N	DECHLORINATION				
O			ORIFICE, RESTRICTION		
P	PRESSURE,		POINT (TEST) CONNECTION		
Q	QUANTITY	INTEGRATE, TOTALIZE			
R	RADIATION		RECORD		
S	SPEED, FREQUENCY	SAFETY		SWITCH	
T	TEMPERATURE			TRANSMIT	
U	MULTIVARIABLE		MULTI-FUNCTION	MULTI-FUNCTION	MULTI-FUNCTION
V	VIBRATION, MECHANICAL ANALYSIS			VALVE, DAMPER, LOUVER	
W	WEIGHT, FORCE		WELL		
X	UNCLASSIFIED	X AXIS	UNCLASSIFIED	UNCLASSIFIED	UNCLASSIFIED
Y	EVENT, STATE OR PRESENCE	Y AXIS		RELAY, COMPUTE, CONVERT	
Z	POSITION, DIMENSION	Z AXIS		DRIVER, ACTUATOR, UNCLASSIFIED FINAL CONTROL ELEMENT	

(+) WHEN USED, EXPLANATION IS SHOWN ADJACENT TO INSTRUMENT SYMBOL. SEE ABBREVIATIONS AND LETTER SYMBOL

GENERAL NOTES

1. COMPONENTS AND PANELS TO BE FURNISHED BY AN EQUIPMENT SUPPLIER ARE DESIGNATED ON INDIVIDUAL SHEETS. THESE INSTRUMENTS WILL BE INSTALLED BY CONTRACTOR.
2. ALL COMPONENTS AND PANELS NOT DESIGNATED AS FURNISHED BY AN EQUIPMENT SUPPLIER WILL BE FURNISHED AND SUPPLIED BY THE CONTRACTOR.
3. THIS IS A STANDARD LEGEND. NOT ALL OF THIS INFORMATION MAY BE USED ON THIS PROJECT.

AS BUILT

LINE LEGEND

PROCESS (CLOSED CONDUIT. DASHED LINE INDICATES EXISTING FLOW STREAM)
PROCESS (BELT CONVEYOR)
PROCESS (SCREW CONVEYOR)
OPEN CHANNEL
ELECTRICAL SIGNAL
BUILDING OR FACILITY BOUNDARY
CONNECTING LINES
NON-CONNECTING LINES
CONTROL AIR
HYDRAULIC LINE

ORIGINAL SCALE IN INCHES FOR REDUCED PLANS
0 1 2 3

No.	Date	Revisions	App.

STATE OF TEXAS
DARRELL J. McADAMS
54522
LICENSED PROFESSIONAL ENGINEER
02-08-08

klotz associates

Binkley & Barfield
consulting engineers
1710 Seamist Drive
Houston, Texas 77008-3189
(713) 869-3433

SURVEYED BY: GEOSOLUTIONS | FIELD BOOK NO. : N/A

CITY OF HOUSTON
DEPARTMENT OF PUBLIC WORKS AND ENGINEERING

ALMEDA SIMS WWTP & SPF IMPROVEMENTS PACKAGE I

PROCESS AND INSTRUMENTATION DIAGRAM SYMBOLS

FILE NO:	WW4903
WBS:	R-000298-0004-4
DRAWING SCALE	
NO SCALE	
CITY OF HOUSTON PM	
IRAJ RANJBAR, P.E.	
DWG NO. :	I-100
SHEET NO.	33 OF 109

PUBLIC WORKS AND ENGINEERING ACCEPTED & FILED
44488
CITY DRAWING NUMBER
HOUSTON, TEXAS

G:\115800 Almeda\CADD_I-101 SCADA SCHEM.dwg Feb 08,2008 - 9:16am swh

EXISTING TRUCK LOADING STATION

EXISTING ENCLOSURE

EXISTING SIEMENS X204 ETHERNET SWITCH

EXISTING PATCH PANEL

NEW PATCH PANEL

NEW FIBER OPTIC CABLE (SEE NOTE 1)

NEW FIBER OPTIC CONNECTION (SHOWN IN DETAIL BELOW)

NEW BLOWER BUILDING

(SEE NOTE 3)

NEW CP300

NEW SIEMENS REMOTE I/O MODULE

PROFIBUS

NEW MASTER BLOWER CONTROL PANEL CP 200

NEW PLC 200

PROFIBUS MASTER

NEW SIEMENS S7-315-2PN/DP PLC

NEW SIEMENS OP177B HMI

PROFIBUS

NEW PATCH PANEL

NEW SIEMENS X204 ETHERNET SWITCH

NEW SIEMENS X208 ETHERNET SWITCH

CAT6 CABLE

ETHERNET

BLOWER BL 210 NEW BLOWER CONTROL PANEL CP 210

NEW PLC 210

BLOWER BL 220 NEW BLOWER CONTROL PANEL CP 220

NEW PLC 220

BLOWER BL 240 NEW BLOWER CONTROL PANEL CP 240

NEW PLC 240

(SEE NOTE 2)

BLOWER BL 210 NEW BLOWER VFD 210

VFD PROFIBUS PORT

NEW BLOWER MOTOR MONITOR

BLOWER BL 220 NEW BLOWER VFD 220

FUTURE BLOWER BL 230 NEW BLOWER VFD 230

(SEE NOTE 2)

BLOWER BL 240 NEW BLOWER VFD 240

NOTES:

1. FIBER-OPTIC CABLE. REFER TO SPECIFICATION SECTION 13320
2. BLOWER BL 230 IS A FUTURE BLOWER AND IS NOT SHOWN. BLOWER BL 230 SHALL BE INSTALLED ON A FUTURE PROJECT. NEW VFD 230 SHALL BE INSTALLED ON THIS PROJECT.
3. ESTABLISH ETHERNET COMMUNICATION BETWEEN EXISTING PLC TWAS AND NEW PLC 200. CONTRACTOR SHALL VERIFY DATA TRANSFER BETWEEN EXISTING PLC TWAS AND NEW PLC 200 FOR PROCESS CONTROL. REFER TO SPECIFICATION SECTION 13440.
4. PROFIBUS CABLE, COPPER, RS-485
5. EXISTING PLC 430 IS CONNECTED TO EXISTING PROFIBUS SLAVE NODES. THESE EXISTING PROFIBUS SLAVE NODES ARE EXISTING POWER METERS. THESE EXISTING PROFIBUS SLAVE NODES SHALL REMAIN IN SERVICE UNDER THIS CONTRACT.

NEW BLOWER BUILDING AND EXISTING TRUCK LOADING STATION

EXISTING ENCLOSURE AT EXISTING TRUCK LOADING STATION

EXIST T/R PAIR

REMOVE EXIST PATCH CABLE

NEW PATCH CABLE

EXISTING PATCH PANEL

EXISTING X204 SWITCH

NEW PATCH PANEL

EXIST PATCH CABLE (TWO EA)

NEW PATCH CABLE (TWO EA)

NEW T/R PAIR (TWO EA OF SIX PAIR)

NEW CP 200 AT NEW BLOWER BUILDING

NEW PATCH CABLE (TWO EA)

NEW X204 SWITCH

NEW PATCH PANEL

NEW FIBER-OPTIC CABLE (SEE NOTE 1)

NEW CONNECTION TO EXISTING PLANT ETHERNET LAN DETAIL

LEGEND:

HMI - HUMAN/MACHINE/INTERFACE
T/R - TRANSMIT/RECEIVE
LAN - LOCAL AREA NETWORK
VFD - VARIABLE FREQUENCY DRIVE
I/O - INPUT/OUTPUT

NEW CP 600

NEW SIEMENS REMOTE INPUT/OUTPUT MODULE

NEW SIEMENS OP177B HMI

PROFIBUS

EXISTING MAIN SWITCHGEAR BUILDING

EXISTING BLOWER BUILDING

EXISTING CP TWAS

(SEE NOTE 3)

EXISTING SIEMENS S7/300 PLC TWAS

EXISTING SIEMENS HMI

PROFIBUS MASTER

PROFIBUS

NEW CP 700

NEW SIEMENS REMOTE INPUT/OUTPUT MODULE

AT NEW THICKENED SLUDGE PUMPS

PROFIBUS

NEW CP 710

NEW SIEMENS REMOTE INPUT/OUTPUT MODULE

AT NEW SCREENING FACILITY

PROFIBUS

NEW CP 3C

NEW SIEMENS REMOTE INPUT/OUTPUT MODULE

AT NEW MCC-3C

EXISTING CP 430

EXISTING SIEMENS 545 PLC 430

EXISTING SIEMENS HMI

PROFIBUS MASTER

PROFIBUS

EXISTING ETHERNET

TO EXISTING PROFIBUS SLAVE NODES (SEE NOTE 5)

AS BUILT

WAS PUMP STATION AND SCREENING/THICKENER AREAS

COLOR TABLE:

ORIGINAL SCALE IN INCHES FOR REDUCED PLANS

0 1 2 3

No.	Date	Revisions	App.

STATE OF TEXAS
DARRELL J. McADAMS
54522
LICENSED PROFESSIONAL ENGINEER
02-68-08

klotz associates

Binkley & Barfield consulting engineers
1710 Seamist Drive
Houston, Texas 77008-3189
(713) 869-3433

SURVEYED BY: GEOSOLUTIONS | FIELD BOOK NO. : N/A

CITY OF HOUSTON
DEPARTMENT OF PUBLIC WORKS AND ENGINEERING

ALMEDA SIMS WWTP & SPF IMPROVEMENTS PACKAGE I

SCADA NETWORK SCHEMATIC

FILE NO:	WW4903
WBS:	R-000298-0004-4
DRAWING SCALE	NO SCALE
CITY OF HOUSTON PM	IRAJ RANJBAR, P.E.
DWG NO. :	I-101
SHEET NO.	34 OF 109

ACCEPTED & FILED
44488
CITY DRAWING NUMBER

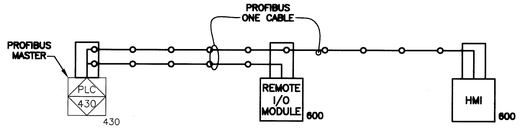

NEW PROFIBUS LAYOUT (PLC 430)
SEE SCADA NETWORK SCHEMATIC I-101

EXISTING PROFIBUS SLAVE NODES (POWER METERS) NOT SHOWN.
EXISTING CP 430 HIM NOT SHOWN (SEE NOTE 7).

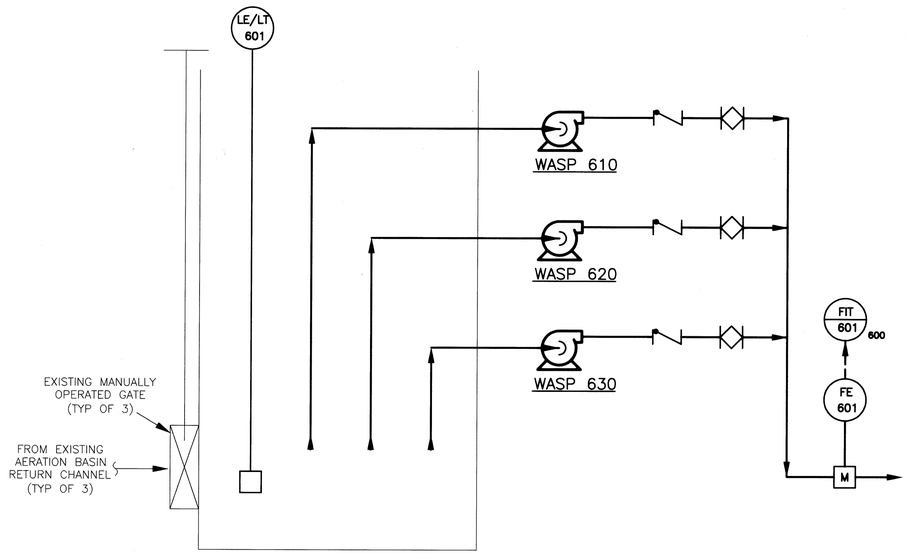

EXISTING WAS PUMP STATION WETWELL

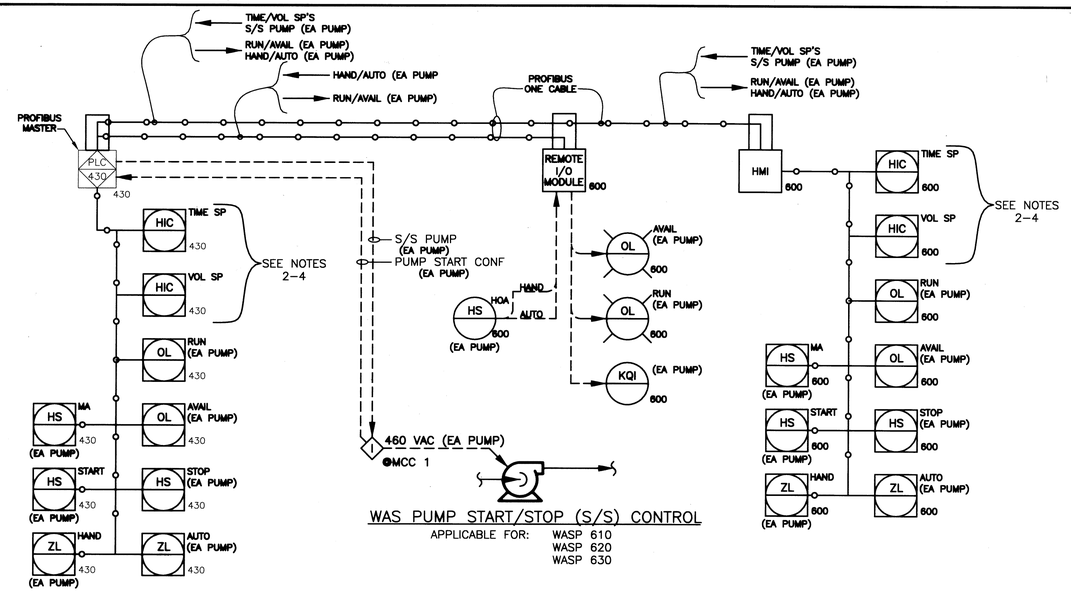

WAS PUMP START/STOP (S/S) CONTROL

APPLICABLE FOR: WASP 610
WASP 620
WASP 630

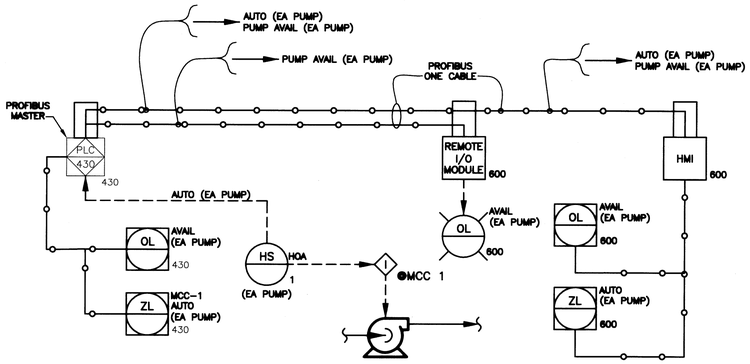

MCC 1 HOA HAND SWITCHES

APPLICABLE FOR: WASP 610
WASP 620
WASP 630

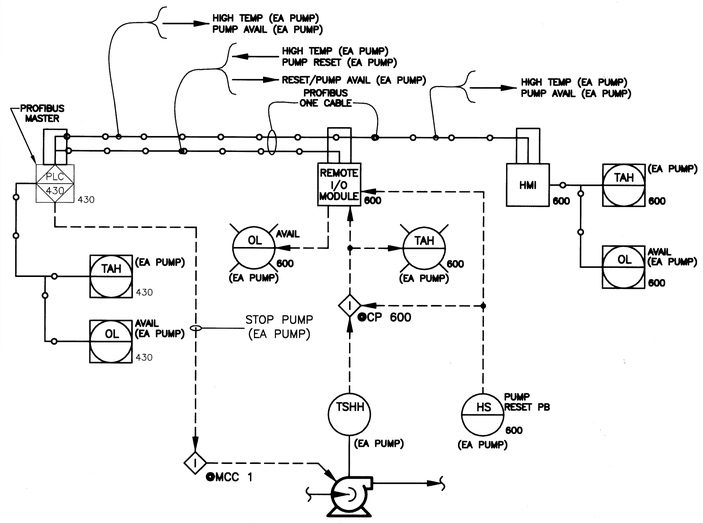

WAS PUMP HIGH TEMPERATURE ALARM

APPLICABLE FOR: WASP 610
WASP 620
WASP 630

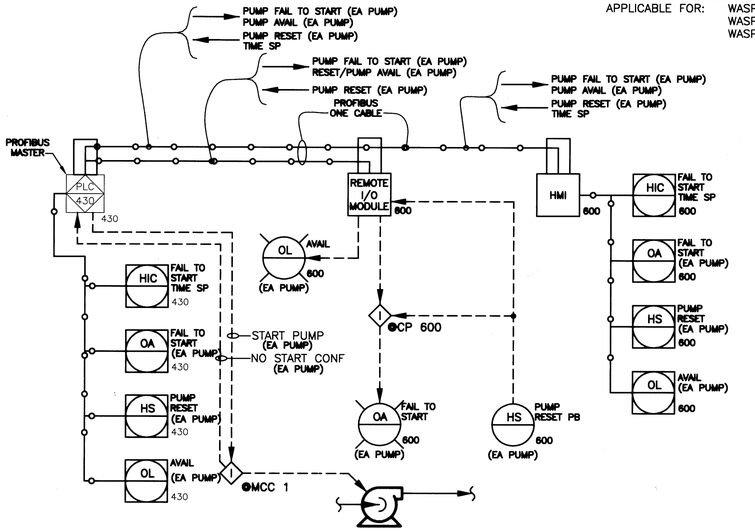

WAS PUMP FAIL TO START ALARM

APPLICABLE FOR: WASP 610
WASP 620
WASP 630

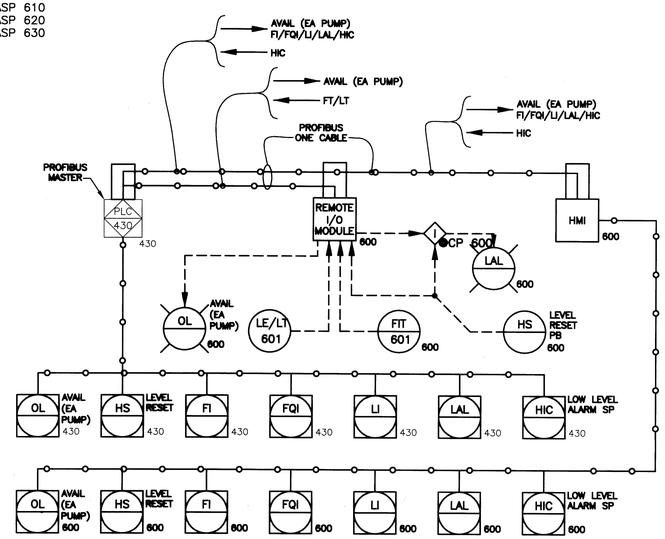

TRANSMITTERS AND ALARMS

APPLICABLE FOR: FIT 601
LE/LT 601

LEGEND:

I/O – INPUT/OUTPUT
HMI – HUMAN/MACHINE/INTERFACE
MCC – MOTOR CONTROL CENTER
LAN – LOCAL AREA NETWORK
PB – PUSHBUTTON
S/S – START/STOP
SP – SETPOINT
MA – MANUAL/AUTO

NOTES:

1. COMMUNICATION BETWEEN THE REMOTE I/O MODULE AND HMI AT CP 600 AND THE MCC's IS ROUTED THROUGH EXISTING PLC 430 AT EXISTING CP 430.

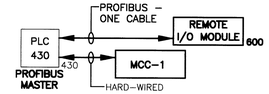

2. REFER TO SPECIFICATION SECTION 13440 FOR DESCRIPTION OF TIME AND VOLUME SETPOINTS.
3. WAS PUMP SCHEDULE IS NOT SHOWN. REFER TO SPECIFICATION SECTION 13440.
4. PERMISSIVES MUST BE CONFIRMED BEFORE ANY WAS PUMP CAN BE STARTED, INCLUDING INFLUENT VALVES, ROTARY SCREENS, BELT CONVEYOR, ETC. REFER TO SPECIFICATION SECTION 13440 AND APPLICABLE P&IDs.
5. REFER TO DWG I-103 FOR MOTOR CURRENT OVERLOAD ALARM
6. EXISTING ETHERNET COMMUNICATION BETWEEN EXISTING PLC 430 AND EXISTING PLC TWAS IS NOT SHOWN. REFER TO I-101 AND SPECIFICATION SECTION 13440.
7. EXISTING HMI AT EXISTING CP 430 IS SIEMENS MODEL OP17. NEW DISPLAYS AT CP 430 HMI ARE TEXT BASED.

AS BUILT

No.	Date	Revisions	App.

STATE OF TEXAS
DARRELL J. McADAMS
54522
LICENSED PROFESSIONAL ENGINEER
02-08-08

klotz associates

Binkley & Barfield
consulting engineers
1710 Seamist Drive
Houston, Texas 77008-3189
(713) 869-3433

SURVEYED BY: GEOSOLUTIONS FIELD BOOK NO. : N/A

CITY OF HOUSTON
DEPARTMENT OF PUBLIC WORKS AND ENGINEERING

ALMEDA SIMS WWTP & SPF IMPROVEMENTS PACKAGE I

WAS PUMP STATION P&ID

FILE NO:	WW4903
WBS:	R-000298-0004-4
DRAWING SCALE	NO SCALE
CITY OF HOUSTON PM	IRAJ RANJBAR, P.E.
DWG NO. :	I-102
SHEET NO.	35 OF 109

ACCEPTED & FILED
44488
CITY DRAWING NUMBER
HOUSTON, TEXAS

COLOR TABLE:

ORIGINAL SCALE IN INCHES FOR REDUCED PLANS
0 1 2 3

G:\115800 Almeda\CADD_I-102 WAS Pump Station P&ID.dwg Feb 07,2008 - 10:08am swh

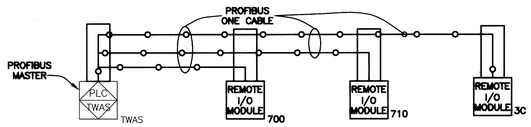

NEW PROFIBUS LAYOUT (PLC TWAS)
SEE SCADA NETWORK SCHEMATIC I-101
EXISTING CP TWAS HMI IS NOT SHOWN

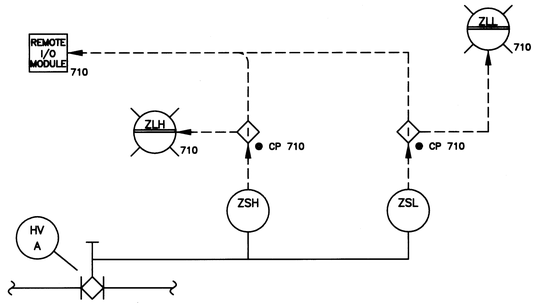

MANUAL VALVES WITH LIMIT SWITCHES
APPLICABLE FOR: A
HV 710

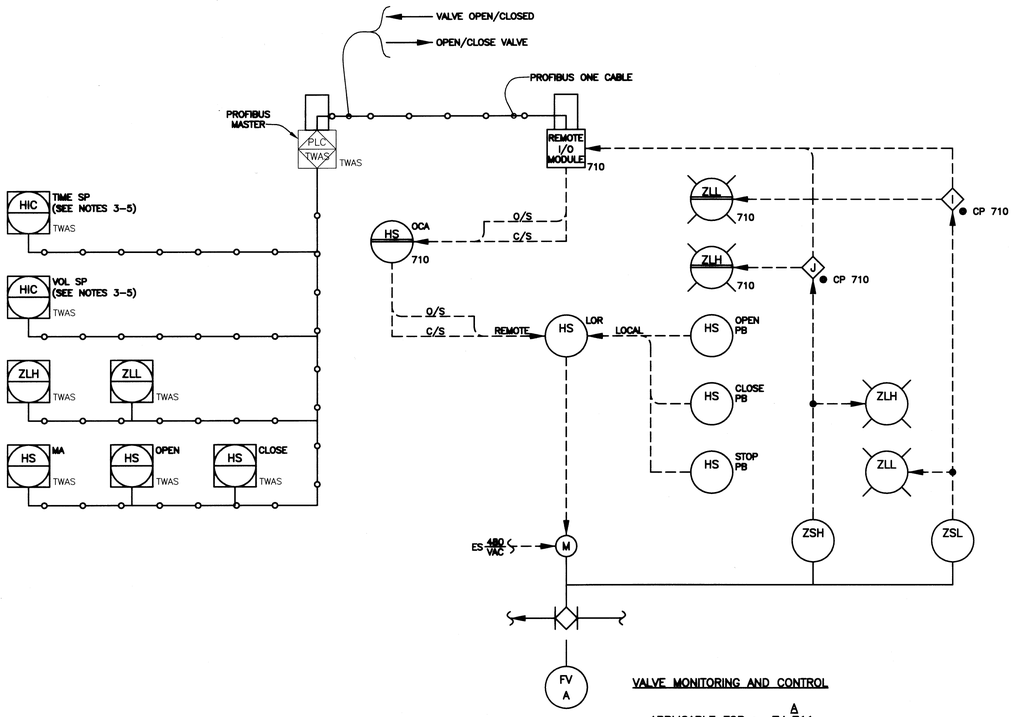

VALVE MONITORING AND CONTROL
APPLICABLE FOR : A
FV 711
FV 721

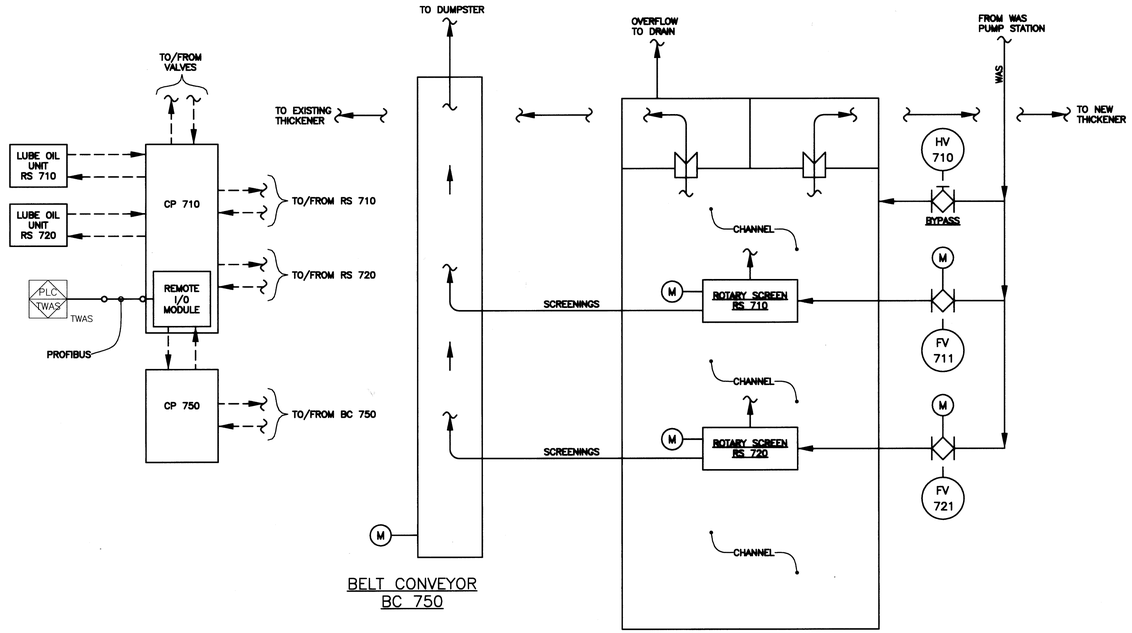

BELT CONVEYOR
BC 750

WAS ROTARY SCREENS

SCREENING FACILITIES LAYOUT

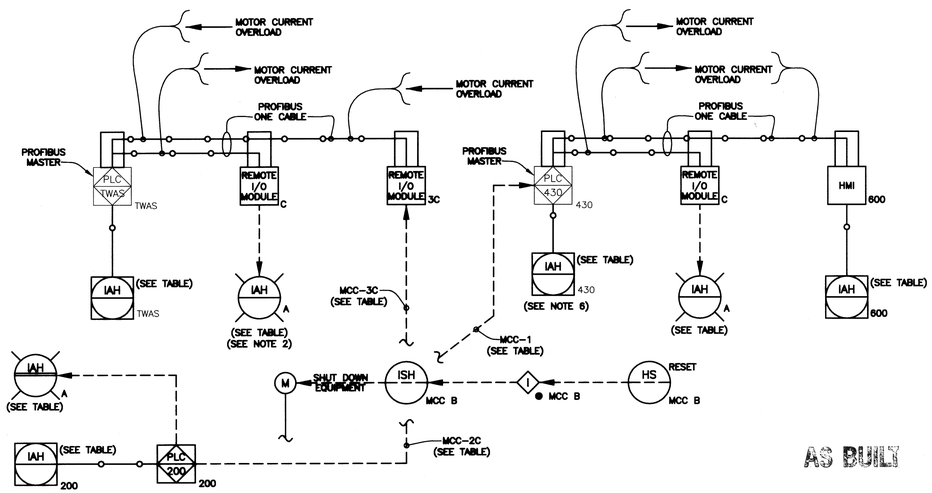

AS BUILT

MOTOR CURRENT OVERLOAD ALARMS AT MCC B (SEE TABLE)

APPLICABLE FOR:	CP A IAH LIGHT	MCC B	REMOTE I/O MODULE AT CP C	IAH HMI DISPLAYS AT CP TWAS	AT CP'S 430/600	AT CP 200
TWASP 310*	CP 300	MCC 2C	N/A	NO	NO	YES
TWASP 320*	CP 300	MCC 2C	N/A	NO	NO	YES
TWASP 330*	CP 300	MCC 2C	N/A	NO	NO	YES
WASP 610*	CP 600	MCC 1	CP 600	NO	YES	NO
WASP 620*	CP 600	MCC 1	CP 600	NO	YES	NO
WASP 630*	CP 600	MCC 1	CP 600	NO	YES	NO
RS 710	CP 710	MCC 3C	CP 710	YES	NO	NO
RS 720	CP 710	MCC 3C	CP 710	YES	NO	NO
BC 750	CP 750	MCC 3C	CP 710	YES	NO	NO
THK 800*	CP 800	MCC 3C	CP 700	YES	NO	NO
TWASP 810*	CP 700	MCC 3C	CP 700	YES	NO	NO
TWASP 820*	CP 700	MCC 3C	CP 700	YES	NO	NO
TWASP 830*	CP 700	MCC 3C	CP 700	YES	NO	NO

* REFER TO APPLICABLE P&IDs

LEGEND:

I/O – INPUT/OUTPUT
HMI – HUMAN/MACHINE/INTERFACE
MCC – MOTOR CONTROL CENTER
LAN – LOCAL AREA NETWORK
PB – PUSHBUTTON
RS – ROTARY SCREEN
BC – BELT CONVEYOR
S/S – START/STOP
SP – SETPOINT
LOR – LOCAL/OFF/REMOTE
MA – MANUAL/AUTO
OCA – OPEN/CLOSE/AUTO
O/S – OPEN/STOP
C/S – CLOSE/STOP

NOTES:

1. COMMUNICATION BETWEEN THE REMOTE I/O MODULE AT CP 710 AND THE MCC's IS ROUTED THROUGH EXISTING PLC TWAS AT EXISTING CP TWAS.

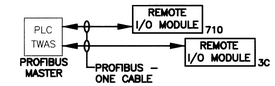

2. SINGLE HORIZONTAL LINE IS SHOWN. DOUBLE HORIZONTAL LINES ARE APPLICABLE FOR SOME CONTROL PANELS.
3. REFER TO SPECIFICATION SECTION 13440 FOR DESCRIPTION OF TIME AND VOLUME SETPOINTS.
4. WAS PUMPS ARE INTERLOCKED WITH SCREENING FACILITIES EQUIPMENT. WAS PUMP SCHEDULE IS NOT SHOWN. REFER TO SPECIFICATION SECTION 13440.
5. PERMISSIVES MUST BE CONFIRMED BEFORE ANY WAS PUMP CAN BE STARTED, INCLUDING INFLUENT VALVES, ROTARY SCREENS, BELT CONVEYOR, ETC. REFER TO SPECIFICATION SECTION 13440.
6. NEW DISPLAYS AT EXISTING CP 430 HMI ARE TEXT BASED.

No.	Date	Revisions	App.

STATE OF TEXAS
DARRELL J. McADAMS
54522
LICENSED PROFESSIONAL ENGINEER
02-08-08

klotz associates

Binkley & Barfield consulting engineers
1710 Seamist Drive
Houston, Texas 77008-3189
(713) 869-3433

SURVEYED BY: GEOSOLUTIONS | FIELD BOOK NO. : N/A

CITY OF HOUSTON
DEPARTMENT OF PUBLIC WORKS AND ENGINEERING

ALMEDA SIMS WWTP & SPF IMPROVEMENTS PACKAGE I

SCREENING FACILITIES LAYOUT P&ID

FILE NO:	WW4903
WBS: R-000298-0004-4	
DRAWING SCALE	
NO SCALE	
CITY OF HOUSTON PM	
IRAJ RANJBAR, P.E.	
DWG NO. :	I-103
SHEET NO. 36 OF 109	

PUBLIC WORKS AND ENGINEERING ACCEPTED & FILED
444888
CITY DRAWING NUMBER
HOUSTON, TEXAS

G:\115800 Almeda\CADD_I-103 INF SCRN PID.dwg Feb 07,2008 - 10:14am swh

COLOR TABLE:

ORIGINAL SCALE IN INCHES FOR REDUCED PLANS
0 1 2 3

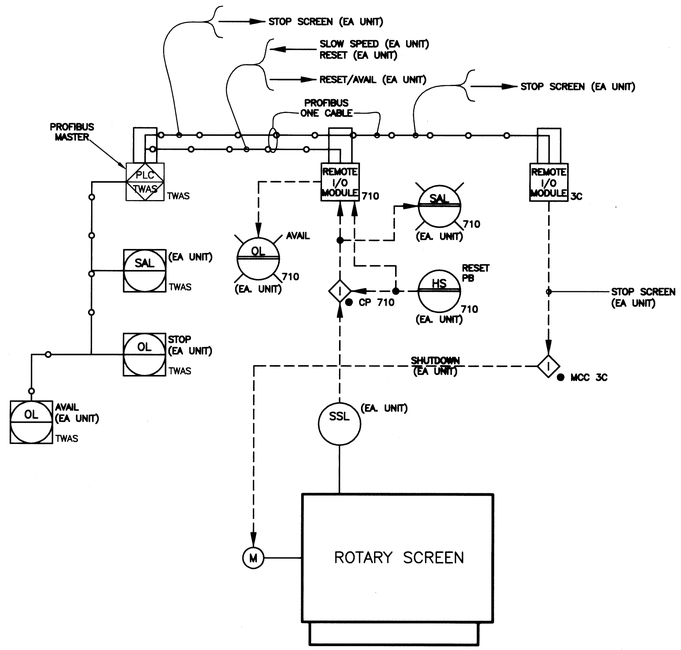

SLOW SPEED SWITCH ALARM

APPLICABLE FOR : RS 710
RS 720

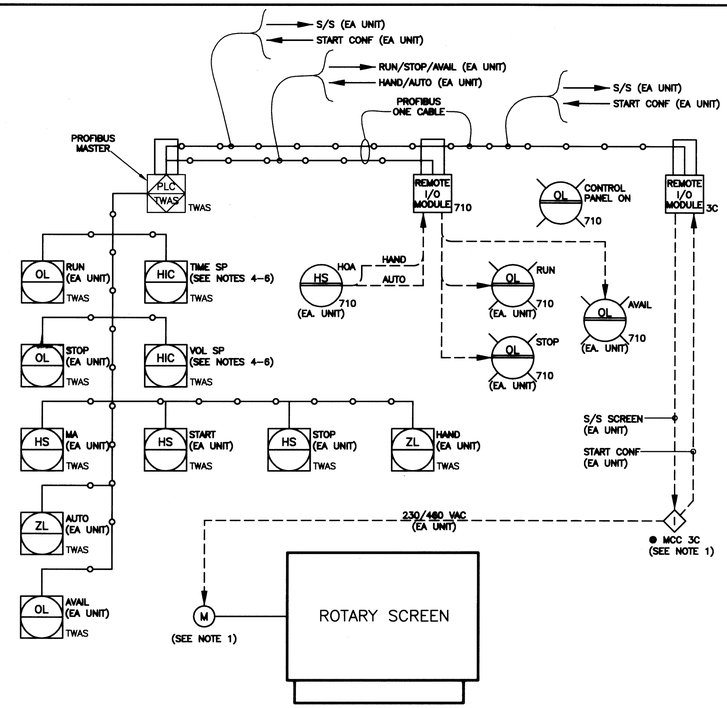

ROTARY SCREEN START/STOP (S/S) CONTROL

APPLICABLE FOR : RS 710
RS 720

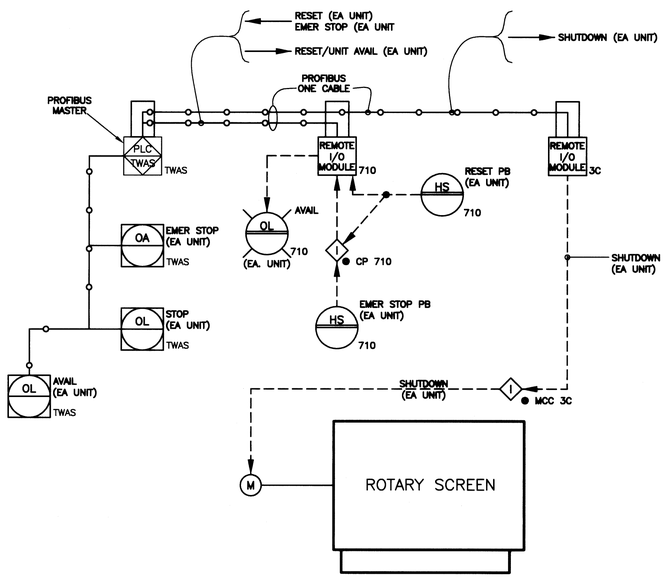

ROTARY SCREEN EMERGENCY STOP PBs

APPLICABLE FOR : RS 710
RS 720

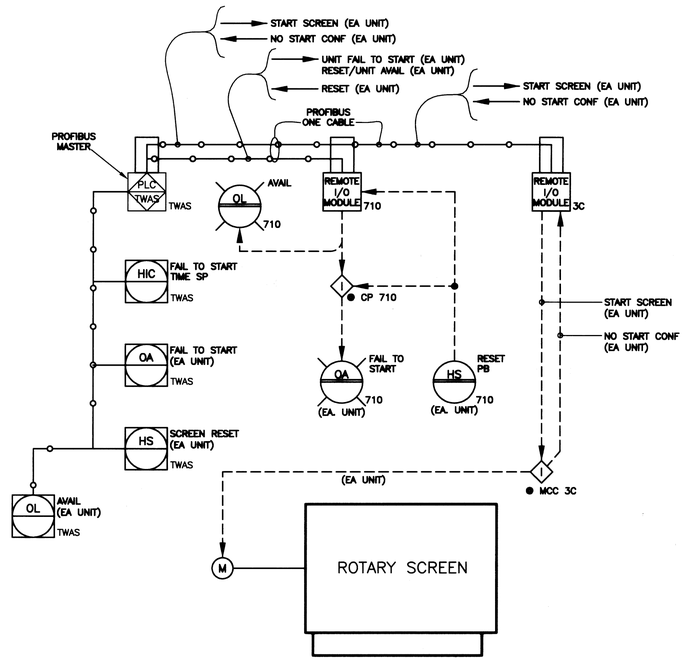

ROTARY SCREEN FAIL TO START ALARM

APPLICABLE FOR : RS 710
RS 720

AS BUILT

LEGEND:

I/O – INPUT/OUTPUT
HMI – HUMAN/MACHINE/INTERFACE
MCC – MOTOR CONTROL CENTER
LAN – LOCAL AREA NETWORK
PB – PUSHBUTTON
S/S – START/STOP
SP – SETPOINT
MA – MANUAL/AUTO
OCA – OPEN/CLOSE/AUTO
O/C – OPEN/CLOSE

NOTES:

1. THE MOTOR IS A TWO SPEED MOTOR WITH HIGH AND LOW SPEEDS. THE MOTOR SHALL BE MANUALLY WIRED FOR EITHER HIGH OR LOW SPEED.
2. ONE SPRAY WATER HEADER IS INTERNAL TO THE SCREEN. THE OTHER SPRAY WATER HEADER IS EXTERNAL.
3. ACCESSORIES FOR SPRAY WASH SYSTEMS SUCH AS PRESSURE REDUCING VALVES, BLOCK VALVES, ETC, ARE NOT SHOWN. REFER TO APPLICABLE SPECIFICATION SECTIONS.
4. REFER TO SPECIFICATION SECTION 13440 FOR DESCRIPTION OF TIME AND VOLUME SETPOINTS.
5. WAS PUMPS ARE INTERLOCKED WITH SCREENING FACILITIES EQUIPMENT. WAS PUMP SCHEDULE IS NOT SHOWN. REFER TO SPECIFICATION SECTION 13440.
6. PERMISSIVES MUST BE CONFIRMED BEFORE ANY WAS PUMP CAN BE STARTED, INCLUDING INFLUENT VALVES, ROTARY SCREENS, BELT CONVEYOR, ETC. REFER TO SPECIFICATION SECTION 13440.
7. REFER TO DWG I-103 FOR MOTOR CURRENT OVERLOAD ALARM.

No.	Date	Revisions	App.

STATE OF TEXAS
DARRELL J. McADAMS
54522
LICENSED PROFESSIONAL ENGINEER
02-08-08

klotz associates

Binkley & Barfield consulting engineers
1710 Seamist Drive
Houston, Texas 77008-3189
(713) 869-3433

SURVEYED BY: GEOSOLUTIONS | FIELD BOOK NO. : N/A

CITY OF HOUSTON
DEPARTMENT OF PUBLIC WORKS AND ENGINEERING

ALMEDA SIMS WWTP & SPF IMPROVEMENTS PACKAGE I

ROTARY SCREEN DETAILS
P&ID (1 OF 2)

FILE NO:	WW4903
WBS:	R-000298-0004-4
DRAWING SCALE	NO SCALE
CITY OF HOUSTON PM	IRAJ RANJBAR, P.E.
DWG NO. :	I-104
SHEET NO.	37 OF 109

PUBLIC WORKS AND ENGINEERING
ACCEPTED & FILED
44488
CITY DRAWING NUMBER
HOUSTON, TEXAS

G:\115800 Almeda\CADD_I-104 Rotary Screens PID.dwg Feb 07,2008 - 10:19am swh

COLOR TABLE:

ORIGINAL SCALE IN INCHES
FOR REDUCED PLANS
0 1 2 3

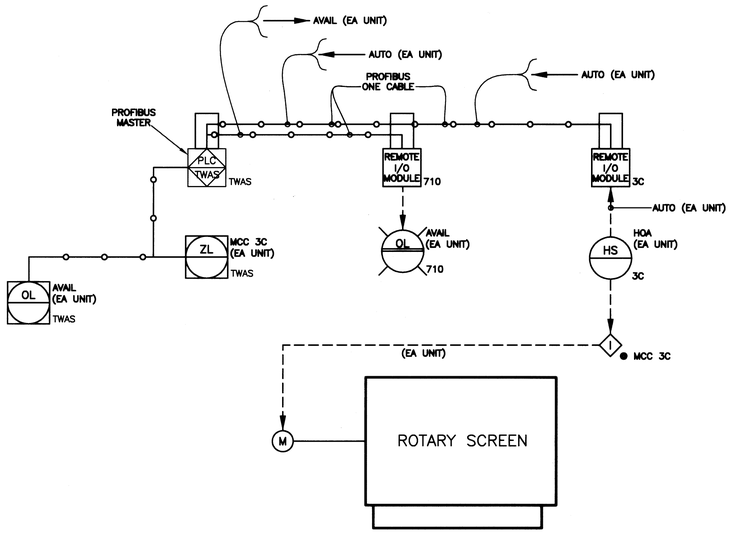

MCC 3C HOA HAND SWITCHES

APPLICABLE FOR : RS 710
RS 720

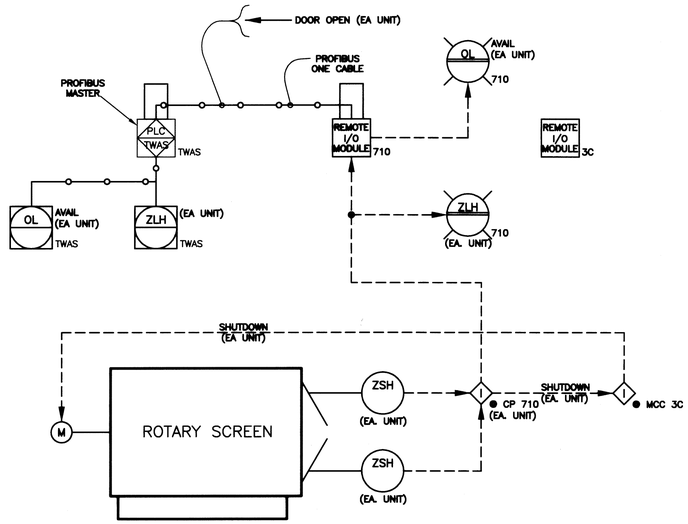

ROTARY SCREEN DOOR POSITION SWITCHES

APPLICABLE FOR : RS 710
RS 720

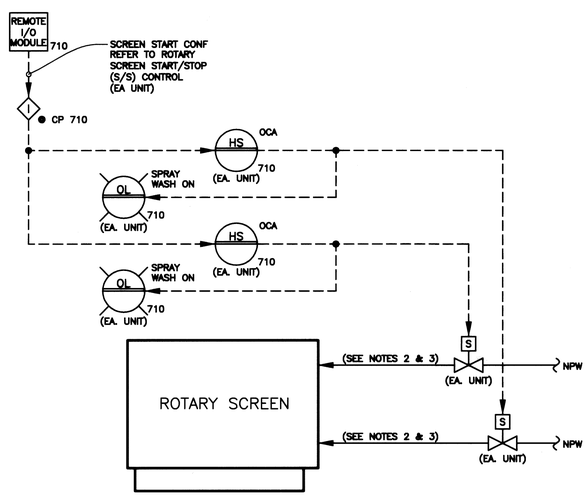

WASHWATER CONTROL

APPLICABLE FOR : RS 710
RS 720

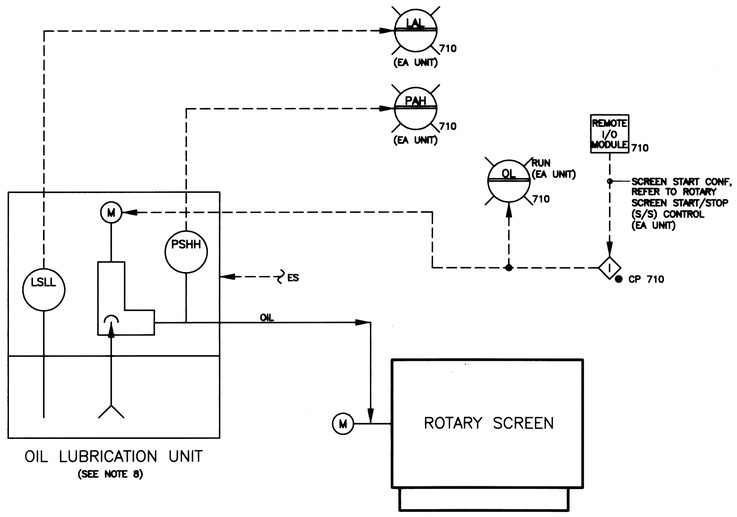

OIL LUBRICATION UNIT
(SEE NOTE 8)

ROTARY SCREEN OIL LUBRICATION UNITS

APPLICABLE FOR : RS 710
RS 720

AS BUILT

LEGEND:

I/O – INPUT/OUTPUT
HMI – HUMAN/MACHINE/INTERFACE
MCC – MOTOR CONTROL CENTER
LAN – LOCAL AREA NETWORK
PB – PUSHBUTTON
S/S – START/STOP
SP – SETPOINT
MA – MANUAL/AUTO
OCA – OPEN/CLOSE/AUTO
O/C – OPEN/CLOSE

NOTES:

1. THE MOTOR IS A TWO SPEED MOTOR WITH HIGH AND LOW SPEEDS. THE MOTOR SHALL BE MANUALLY WIRED FOR EITHER HIGH OR LOW SPEED.
2. ONE SPRAY WATER HEADER IS INTERNAL TO THE SCREEN. THE OTHER SPRAY WATER HEADER IS EXTERNAL.
3. ACCESSORIES FOR SPRAY WASH SYSTEMS SUCH AS PRESSURE REDUCING VALVES, BLOCK VALVES, ETC, ARE NOT SHOWN. REFER TO APPLICABLE SPECIFICATION SECTIONS.
4. REFER TO SPECIFICATION SECTION 13440 FOR DESCRIPTION OF TIME AND VOLUME SETPOINTS.
5. WAS PUMPS ARE INTERLOCKED WITH SCREENING FACILITIES EQUIPMENT. WAS PUMP SCHEDULE IS NOT SHOWN. REFER TO SPECIFICATION SECTION 13440.
6. PERMISSIVES MUST BE CONFIRMED BEFORE ANY WAS PUMP CAN BE STARTED, INCLUDING INFLUENT VALVES, ROTARY SCREENS, BELT CONVEYOR, ETC. REFER TO SPECIFICATION SECTION 13440.
7. REFER TO DWG I–103 FOR MOTOR CURRENT OVERLOAD ALARM.
8. REFER TO MECHANICAL DRAWINGS AND OTHER APPLICABLE DRAWINGS FOR PHYSICAL LOCATIONS OF OIL LUBRICATION UNITS.

No.	Date	Revisions	App.

STATE OF TEXAS
DARRELL J. McADAMS
54522
LICENSED PROFESSIONAL ENGINEER
02-08-08

klotz associates

Binkley & Barfield
consulting engineers
1710 Seamist Drive
Houston, Texas 77008-3189
(713) 869-3433

SURVEYED BY: GEOSOLUTIONS | FIELD BOOK NO. : N/A

CITY OF HOUSTON
DEPARTMENT OF PUBLIC WORKS AND ENGINEERING

ALMEDA SIMS WWTP & SPF IMPROVEMENTS PACKAGE I

ROTARY SCREEN DETAILS
P&ID (2 OF 2)

FILE NO:	WW4903
WBS: R–000298–0004–4	
DRAWING SCALE	
NO SCALE	
CITY OF HOUSTON PM	
IRAJ RANJBAR, P.E.	
DWG NO. :	I–105
SHEET NO. 38 OF 109	

PUBLIC WORKS AND ENGINEERING
ACCEPTED & FILED
44488
CITY DRAWING NUMBER
HOUSTON, TEXAS

G:\115800 Almeda\CADD_I-105 Rotary Screens PID.dwg Feb 07,2008 - 10:20am swh

COLOR TABLE:

ORIGINAL SCALE IN INCHES
FOR REDUCED PLANS
0 1 2 3

G:\115800 Almeda\CADD_I-106 Belt Conveyor Details.dwg Feb 07,2008 - 10:20am swh

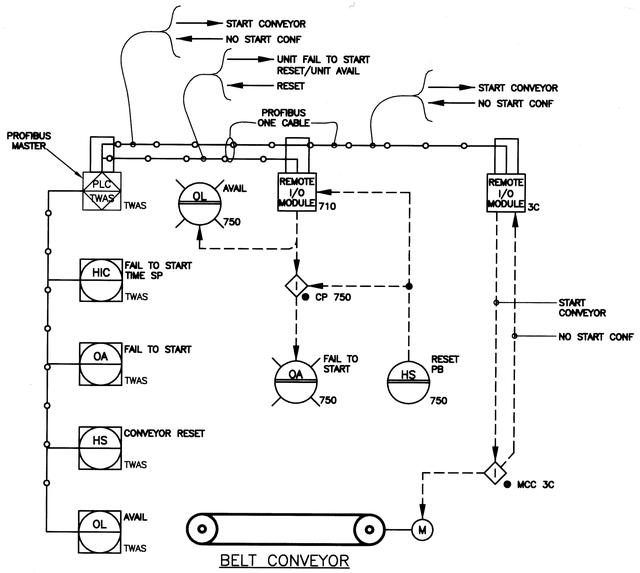

BELT CONVEYOR FAIL TO START ALARM

APPLICABLE FOR : BC 750

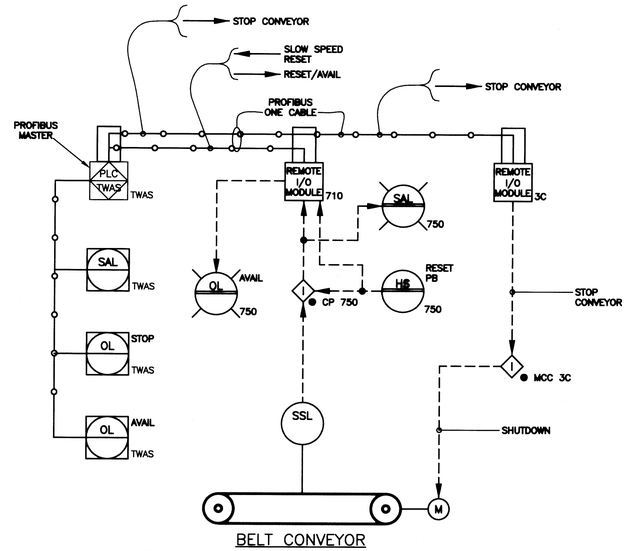

SLOW SPEED SWITCH ALARM

APPLICABLE FOR : BC 750

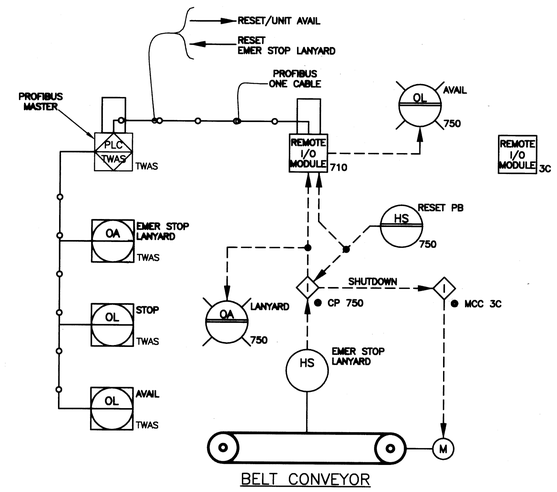

BELT CONVEYOR EMERGENCY STOP LANYARD

APPLICABLE FOR : BC 750

LEGEND:

I/O – INPUT/OUTPUT
HMI – HUMAN/MACHINE/INTERFACE
MCC – MOTOR CONTROL CENTER
LAN – LOCAL AREA NETWORK
PB – PUSHBUTTON
S/S – START/STOP
SP – SETPOINT
MA – MANUAL/AUTO
OCA – OPEN/CLOSE/AUTO
O/C – OPEN/CLOSE

NOTES:

1. ACCESSORIES FOR SPRAY WASH SYSTEMS SUCH AS PRESSURE REDUCING VALVES, BLOCK VALVES, ETC, ARE NOT SHOWN. REFER TO APPLICABLE SPECIFICATION SECTIONS.
2. REFER TO SPECIFICATION SECTION 13440 FOR DESCRIPTION OF TIME AND VOLUME SETPOINTS.
3. WAS PUMPS ARE INTERLOCKED WITH SCREENING FACILITIES EQUIPMENT. WAS PUMP SCHEDULE IS NOT SHOWN. REFER TO SPECIFICATION SECTION 13440.
4. PERMISSIVES MUST BE CONFIRMED BEFORE ANY WAS PUMP CAN BE STARTED, INCLUDING INFLUENT VALVES, ROTARY SCREENS, BELT CONVEYOR, ETC. REFER TO SPECIFICATION SECTION 13440.
5. REFER TO DWG I-103 FOR MOTOR CURRENT OVERLOAD ALARM.

COLOR TABLE:

ORIGINAL SCALE IN INCHES FOR REDUCED PLANS
0 1 2 3

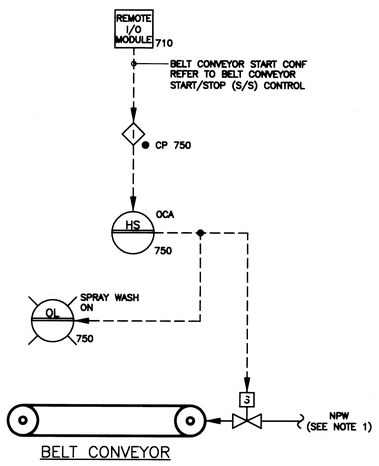

WASHWATER CONTROL

APPLICABLE FOR : BC 750

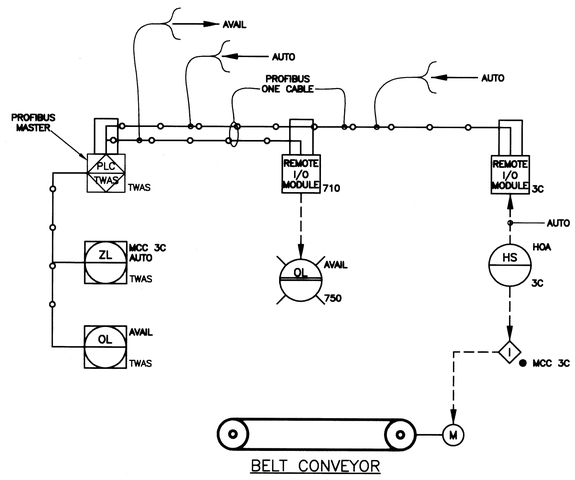

MCC 3C HOA HAND SWITCH

APPLICABLE FOR : BC 750

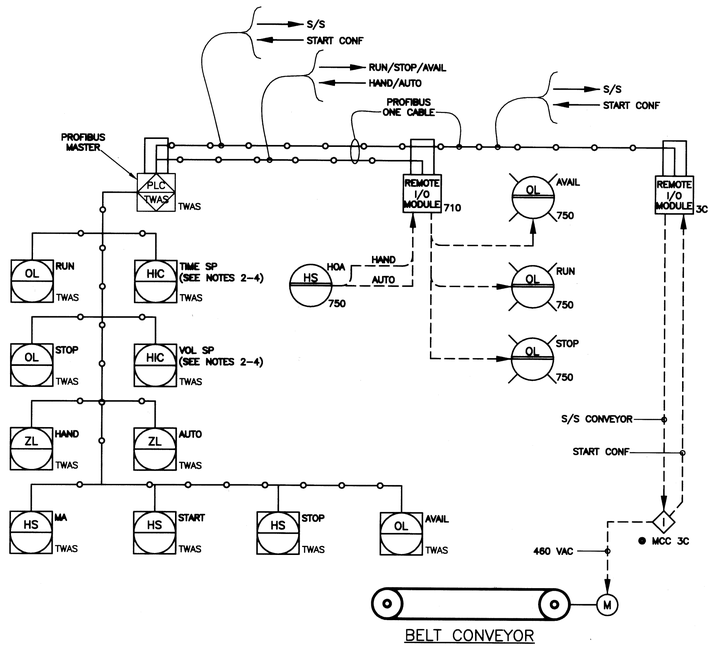

BELT CONVEYOR START/STOP (S/S) CONTROL

APPLICABLE FOR : BC 750

AS BUILT

No.	Date	Revisions	App.

STATE OF TEXAS
DARRELL J. McADAMS
54522
LICENSED PROFESSIONAL ENGINEER
02-08-08

klotz associates

Binkley & Barfield consulting engineers
1710 Seamist Drive
Houston, Texas 77008-3189
(713) 869-3433

SURVEYED BY: GEOSOLUTIONS | FIELD BOOK NO. : N/A

CITY OF HOUSTON
DEPARTMENT OF PUBLIC WORKS AND ENGINEERING

ALMEDA SIMS WWTP & SPF IMPROVEMENTS PACKAGE I

BELT CONVEYOR DETAILS P&ID

FILE NO:	WW4903
WBS: R-000298-0004-4	
DRAWING SCALE	
NO SCALE	
CITY OF HOUSTON PM	
IRAJ RANJBAR, P.E.	
DWG NO. :	I-106
SHEET NO. 39 OF 109	

PUBLIC WORKS AND ENGINEERING ACCEPTED & FILED
444884
CITY DRAWING NUMBER
HOUSTON, TEXAS

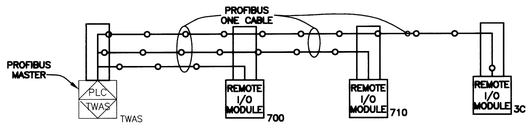

NEW PROFIBUS LAYOUT (PLC TWAS)

SEE SCADA NETWORK SCHEMATIC I-101
EXISTING CP TWAS HMI IS NOT SHOWN

LEGEND:

I/O – INPUT/OUTPUT
MCC – MOTOR CONTROL CENTER

NOTES:

1. COMMUNICATION BETWEEN THE REMOTE I/O MODULE AT CP 700 AND THE MCCs IS ROUTED THROUGH EXISTING PLC TWAS AT CP TWAS.

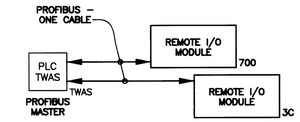

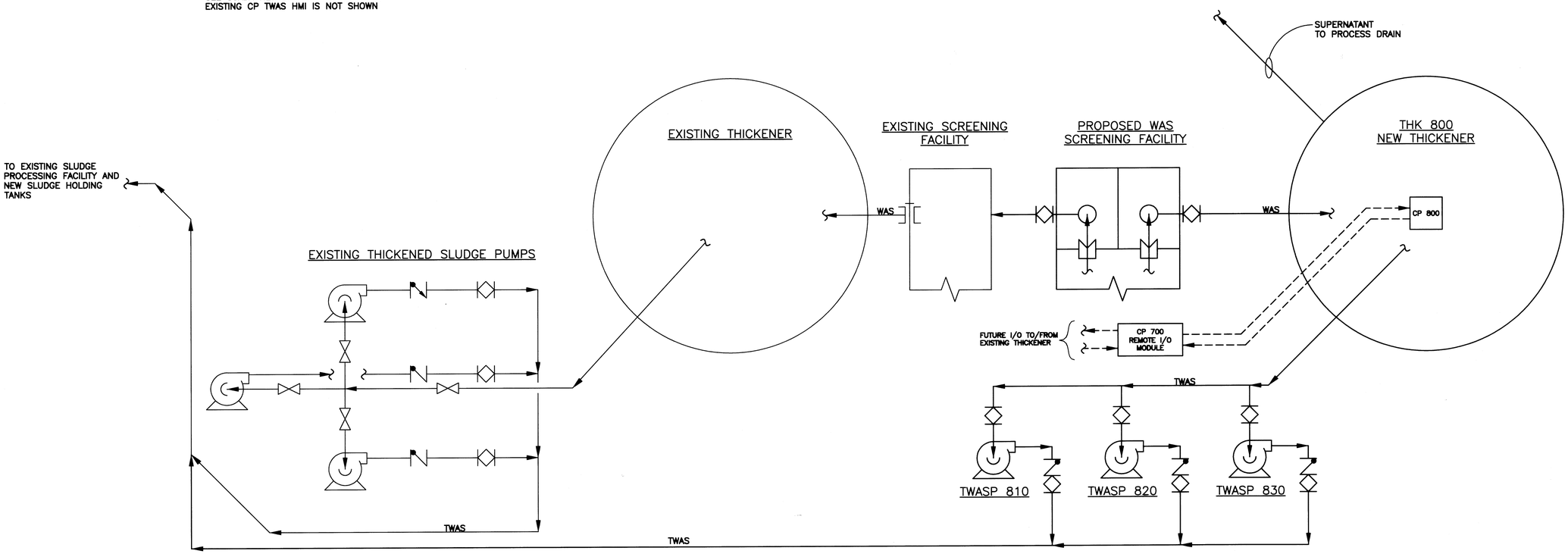

NEW THICKENED SLUDGE PUMPS

No.	Date	Revisions	App.

STATE OF TEXAS
DARRELL J. McADAMS
54522
LICENSED
PROFESSIONAL ENGINEER
02-08-08

klotz associates

Binkley & Barfield
consulting engineers
1710 Seamist Drive
Houston, Texas 77008-3189
(713) 869-3433

SURVEYED BY: GEOSOLUTIONS | FIELD BOOK NO. : N/A

CITY OF HOUSTON
DEPARTMENT OF PUBLIC WORKS AND ENGINEERING

ALMEDA SIMS WWTP & SPF IMPROVEMENTS PACKAGE I

THICKENERS AND THICKENED SLUDGE PUMPS LAYOUT P&ID

AS BUILT

FILE NO:	WW4903
WBS: R-000298-0004-4	
DRAWING SCALE	
NO SCALE	
CITY OF HOUSTON PM	
IRAJ RANJBAR, P.E.	
DWG NO. :	I-107
SHEET NO.	40 OF 109

PUBLIC WORKS AND ENGINEERING
ACCEPTED & FILED
44488
CITY DRAWING NUMBER
HOUSTON, TEXAS

G:\115800 Almeda\CADD_I-107 Thickener & Pumps.dwg Feb 07,2008 - 10:21am swh

COLOR TABLE:

ORIGINAL SCALE IN INCHES
FOR REDUCED PLANS
0 1 2 3

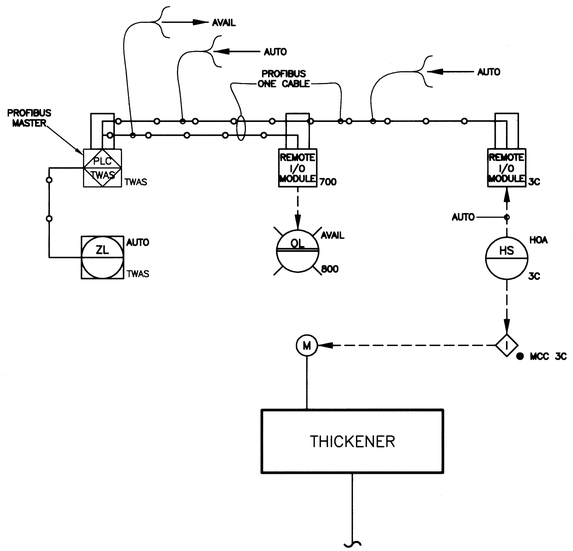

MCC 3C HOA HAND SWITCH

APPLICABLE FOR : THK 800

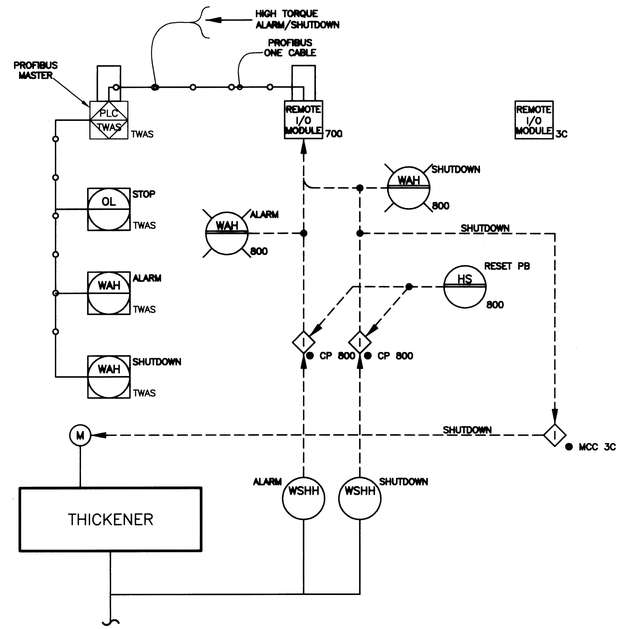

THICKENER TORQUE OVERLOAD ALARMS

APPLICABLE FOR : THK 800

LEGEND:

HMI – HUMAN/MACHINE/INTERFACE
PB – PUSHBUTTON
S/S – START/STOP
SP – SETPOINT

NOTES:

1. WASHWATER PIPING, VALVES, CONTROLS AND ACCESSORIES NOT SHOWN. REFER TO APPLICABLE SPECIFICATION SECTIONS.
2. START AND STOP PUSH BUTTONS ARE MOMENTARY CONTACT.
3. REFER TO DWG I–103 FOR MOTOR CURRENT OVERLOAD ALARM.
4. NEW THICKENER THK 800 IS MANUALLY STARTED AND STOPPED, EITHER LOCALLY AT CP 800 OR REMOTELY. NEW THICKENER THK 800 NORMALLY RUNS CONTINUOUSLY. REFER TO SPECIFICATION SECTION 13440.

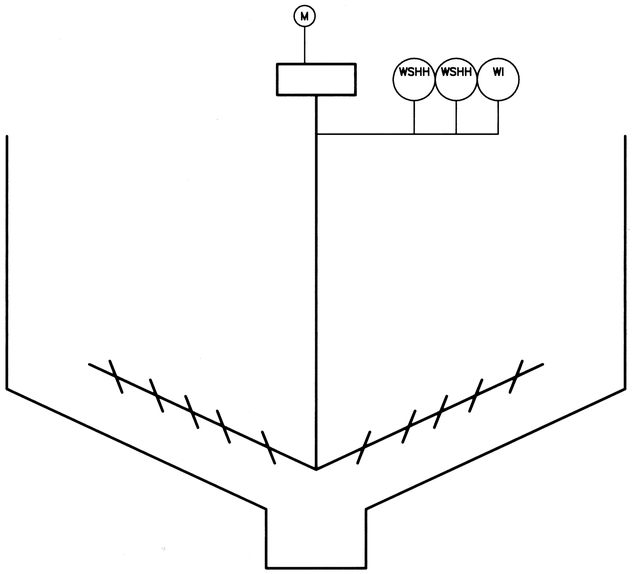

THK 800
NEW THICKENER

APPLICABLE FOR : THK 800

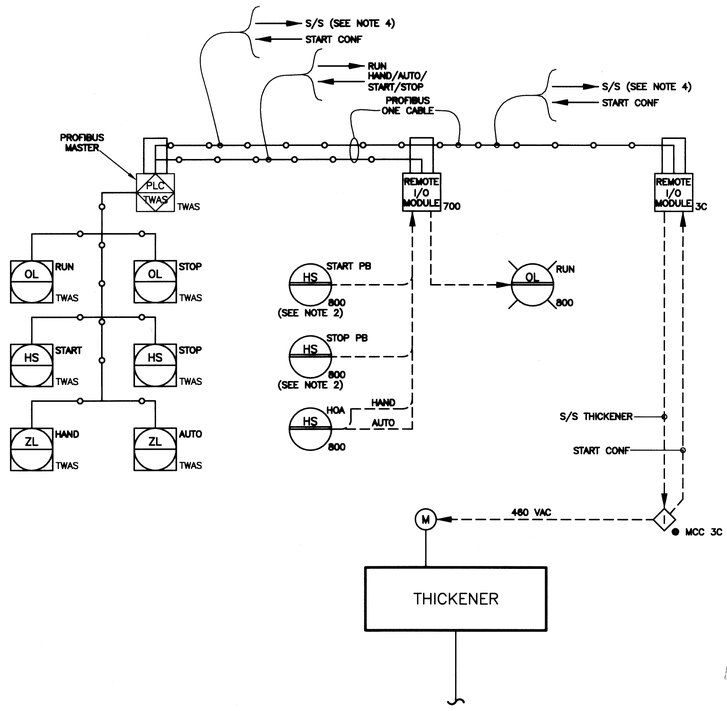

AS BUILT

THICKENER START/STOP (S/S) CONTROL

APPLICABLE FOR : THK 800

No.	Date	Revisions	App.

STATE OF TEXAS
DARRELL J. McADAMS
54522
LICENSED PROFESSIONAL ENGINEER
02-08-08

klotz associates

Binkley & Barfield
consulting engineers
1710 Seamist Drive
Houston, Texas 77008-3189
(713) 869-3433

SURVEYED BY: GEOSOLUTIONS | FIELD BOOK NO. : N/A

CITY OF HOUSTON
DEPARTMENT OF PUBLIC WORKS AND ENGINEERING

ALMEDA SIMS WWTP & SPF IMPROVEMENTS PACKAGE I

THICKENER DETAILS
P&ID

FILE NO:	WW4903
WBS: R-000298-0004-4	
DRAWING SCALE	
NO SCALE	
CITY OF HOUSTON PM	
IRAJ RANJBAR, P.E.	
DWG NO. :	I-108
SHEET NO.	41 OF 109

ACCEPTED & FILED
44488
CITY DRAWING NUMBER
HOUSTON, TEXAS

G:\115800 Almeda\CADD_I-108 Thickener Details PID.dwg Feb 07,2008 - 10:21am swh

COLOR TABLE:

ORIGINAL SCALE IN INCHES
FOR REDUCED PLANS
0 1 2 3

G:\115800 Almeda\CADD_I-109 Thickener TWAS Details PID.dwg Feb 07,2008 - 10:21am swh

COLOR TABLE:

ORIGINAL SCALE IN INCHES
FOR REDUCED PLANS
0 1 2 3

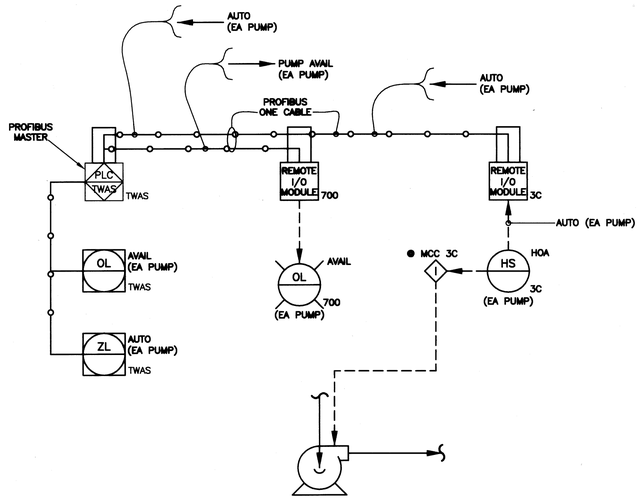

MCC 3C HOA HAND SWITCHES

APPLICABLE FOR : TWASP 810
TWASP 820
TWASP 830

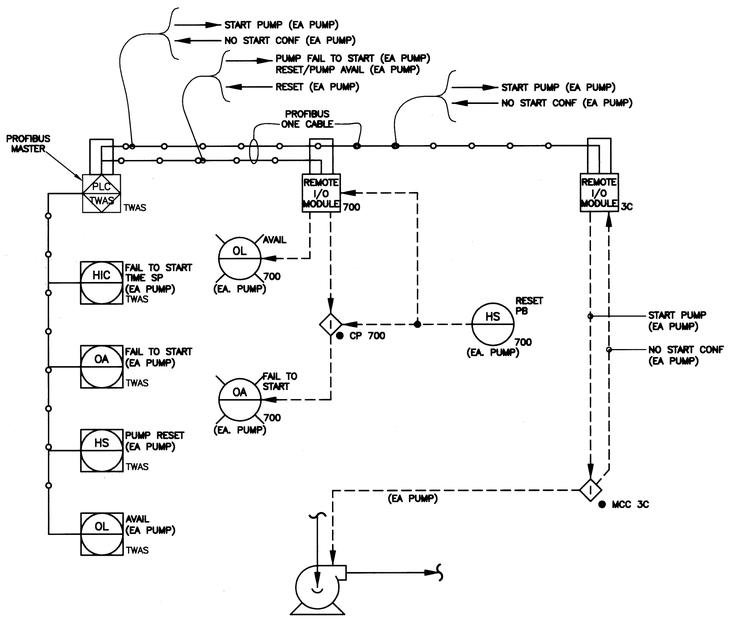

TWAS PUMP FAIL TO START ALARM

APPLICABLE FOR : TWASP 810
TWASP 820
TWASP 830

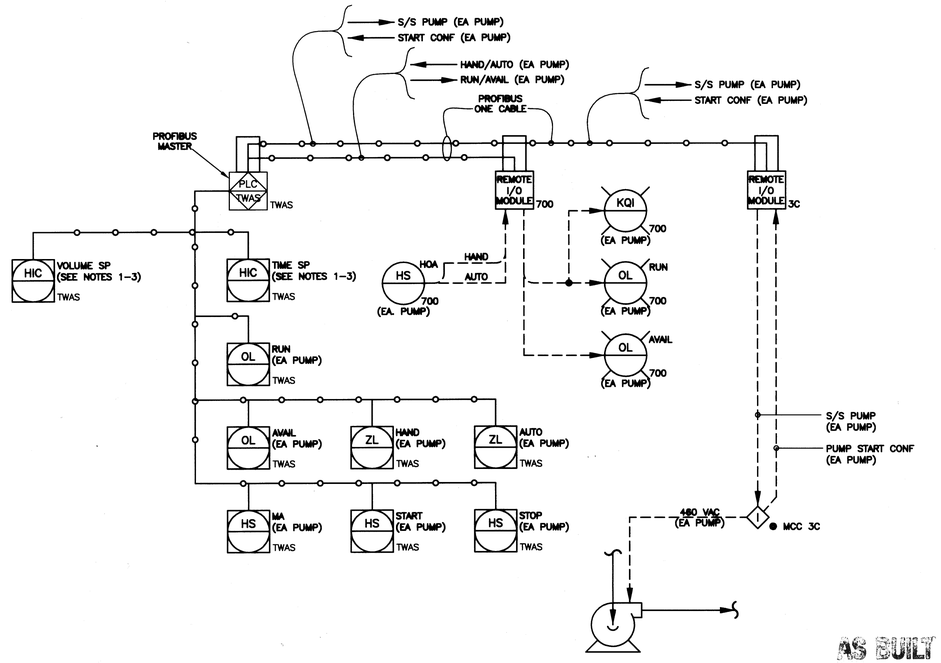

AS BUILT

TWAS PUMP START/STOP (S/S) CONTROL

APPLICABLE FOR : TWASP 810
TWASP 820
TWASP 830

LEGEND:

I/O – INPUT/OUTPUT
HMI – HUMAN/MACHINE/INTERFACE
MCC – MOTOR CONTROL CENTER
PB – PUSHBUTTON
S/S – START/STOP
SP – SETPOINT
MA – MANUAL/AUTO

NOTES:

1. REFER TO SPECIFICATION SECTION 13440 FOR DESCRIPTION OF TIME AND VOLUME SETPOINTS,
2. TWAS PUMP SCHEDULE IS NOT SHOWN. REFER TO SPECIFICATION SECTION 13440.
3. PERMISSIVES MUST BE CONFIRMED BEFORE ANY TWAS PUMP CAN BE STARTED, INCLUDING LEVELS IN NEW SLUDGE HOLDING TANKS AND EXISTING SLUDGE DAY TANK. REFER TO SPECIFICATION SECTION 13440.
4. REFER TO DWG I-103 FOR MOTOR CURRENT OVERLOAD ALARM.

No.	Date	Revisions	App.

STATE OF TEXAS
DARRELL J. McADAMS
54522
LICENSED PROFESSIONAL ENGINEER
02-08-08

klotz associates

Binkley & Barfield
consulting engineers
1710 Seamist Drive
Houston, Texas 77008-3189
(713) 869-3433

SURVEYED BY: GEOSOLUTIONS | FIELD BOOK NO. : N/A

CITY OF HOUSTON
DEPARTMENT OF PUBLIC WORKS AND ENGINEERING

ALMEDA SIMS WWTP & SPF IMPROVEMENTS PACKAGE I

THICKENERS - TWAS PUMP DETAILS P&ID

FILE NO:	WW4903
WBS: R-000298-0004-4	
DRAWING SCALE	
NO SCALE	
CITY OF HOUSTON PM	
IRAJ RANJBAR, P.E.	
DWG NO. :	I-109
SHEET NO. 42 OF 109	

PUBLIC WORKS AND ENGINEERING
ACCEPTED & FILED
44488
CITY DRAWING NUMBER
HOUSTON, TEXAS

G:\115800 Almeda\CADD_I-110 Sludge Holding Tanks PID.dwg Feb 08,2008 - 3:47pm swh

COLOR TABLE:

ORIGINAL SCALE IN INCHES
FOR REDUCED PLANS
0 1 2 3

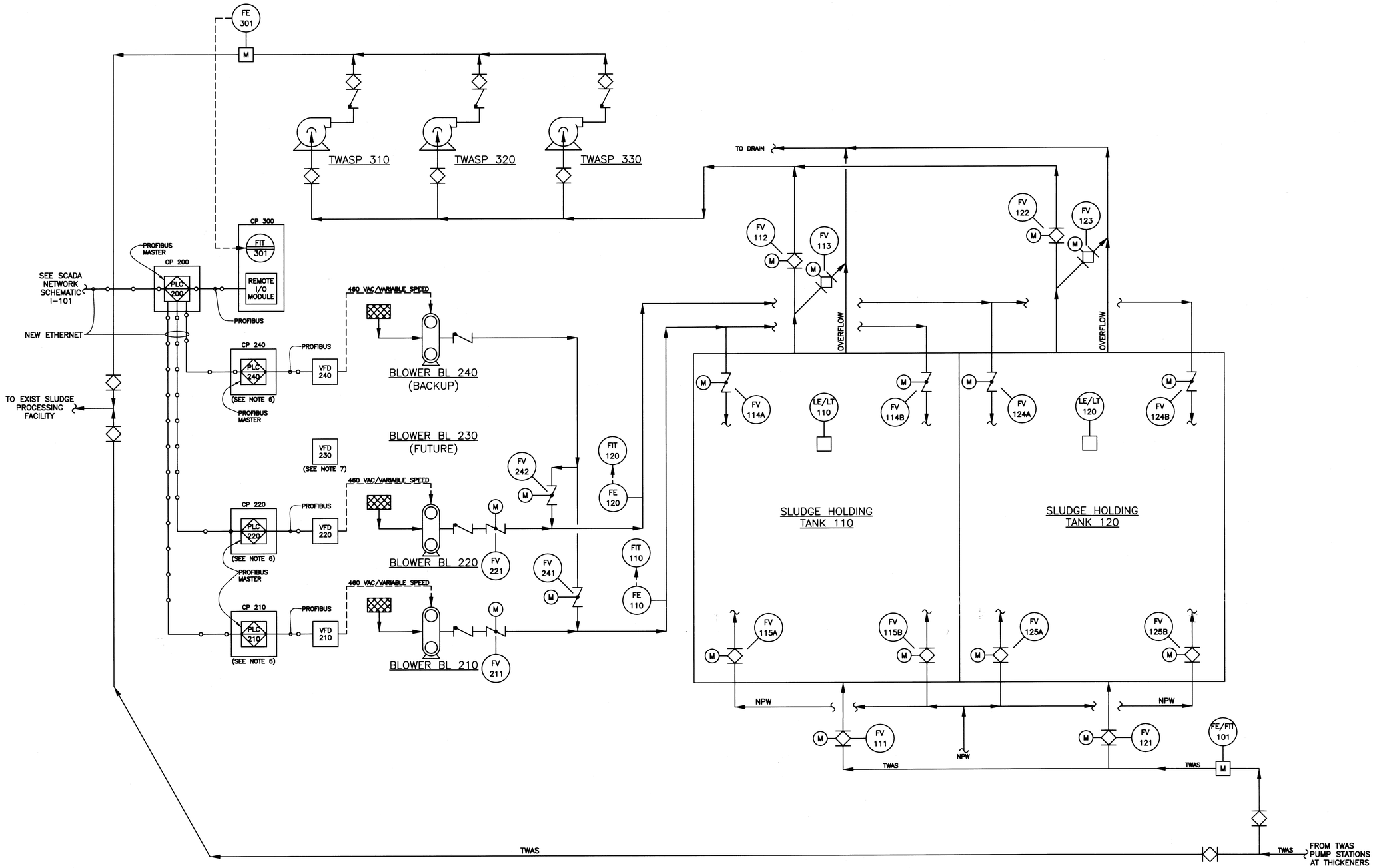

AS BUILT

LEGEND:

LAN – LOCAL AREA NETWORK
VFD – VARIABLE FREQUENCY DRIVE
I/O – INPUT/OUTPUT
HMI – HUMAN/MACHINE/INTERFACE

NOTES:

1. REFER TO SPECIFICATION SECTION 13446 FOR SPECIFICATION OF MAGNETIC FLOW METERS FE-101 & FE-301.
2. REFER TO SPECIFICATION SECTION 13446 FOR THERMAL DISPERSION FLOW METERS FE-110 & FE-120.
3. PERMISSIVES MUST BE CONFIRMED BEFORE ANY TWAS PUMP CAN BE STARTED, INCLUDING LEVELS IN NEW SLUDGE HOLDING TANKS AND EXISTING SLUDGE DAY TANK. REFER TO SPECIFICATION SECTION 13440.
4. REFER TO SPECIFICATION SECTION 13440 FOR BLOWER CONTROLS.
5. REFER TO DWG I-103 FOR MOTOR CURRENT OVERLOAD ALARM.
6. PLC'S AT LOCAL BLOWER CONTROL PANELS PROVIDE CONTROL AND MONITORING FOR THEIR INDIVIDUAL BLOWERS.
7. VFD 230 FOR FUTURE BLOWER BL 230 SHALL BE INSTALLED ON THIS CONTRACT.
8. HMI'S ARE NOT SHOWN

No.	Date	Revisions	App.

STATE OF TEXAS
DARRELL J. McADAMS
54522
LICENSED PROFESSIONAL ENGINEER
02-08-03

klotz associates

Binkley & Barfield
consulting engineers
1710 Seamist Drive
Houston, Texas 77008-3189
(713) 869-3433

SURVEYED BY: GEOSOLUTIONS | FIELD BOOK NO. : N/A

CITY OF HOUSTON
DEPARTMENT OF PUBLIC WORKS AND ENGINEERING

ALMEDA SIMS WWTP & SPF IMPROVEMENTS PACKAGE I

SLUDGE HOLDING TANKS LAYOUT P&ID

FILE NO:	WW4903
WBS:	R-000298-0004-4
DRAWING SCALE	NO SCALE
CITY OF HOUSTON PM	IRAJ RANJBAR, P.E.
DWG NO. :	I-110
SHEET NO.	43 OF 109

ACCEPTED & FILED
44488
CITY DRAWING NUMBER

G:\115800 Almeda\CADD_I-111 Sludge Holding Tanks-Valve.dwg Feb 07,2008 - 11:15am swh

LEGEND:

PB – PUSHBUTTON
MA – MANUAL/AUTO
SP – SETPOINT
LOR – LOCAL/OFF/REMOTE
OCA – OPEN/CLOSE/AUTO
O/S – OPEN/STOP
C/S – CLOSE/STOP
I/O – INPUT/OUTPUT

NOTES:

1. REFER TO SPECIFICATION SECTION 13440 FOR DESCRIPTION OF LEVEL SETPOINTS.
2. PLUG VALVE IS SHOWN. REFER TO APPLICABLE P&ID'S AND SPEC SECTION 01850 FOR CORRECT VALVE TYPE AND SCHEDULE.

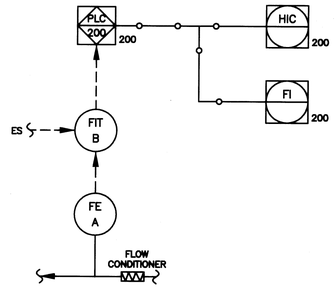

THERMAL DISPERSION FLOW TRANSMITTERS

APPLICABLE FOR:	FLOW SENSOR A	TRANSMITTER B
	FE–110	FIT–110
	FE–120	FIT–120

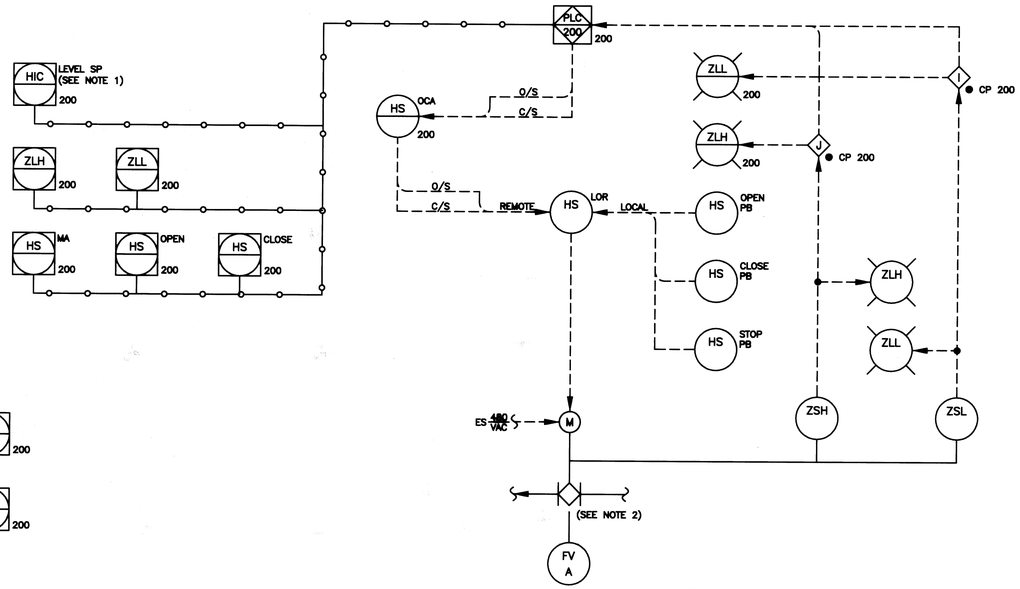

VALVE MONITORING AND CONTROL

APPLICABLE FOR :	A (NOTE 2)
	FV 111
	FV 112
	FV 113
	FV 114A
	FV 114B
	FV 115A
	FV 115B
	FV 121
	FV 122
	FV 123
	FV 124A
	FV 124B
	FV 125A
	FV 125B
	FV 211
	FV 221
	FV 241
	FV 242

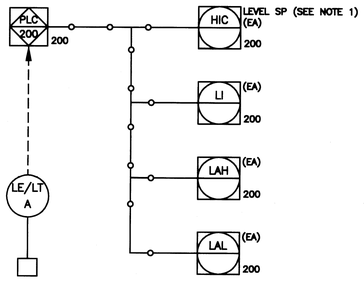

LEVEL TRANSMITTERS

APPLICABLE FOR:	TANK	A
	110	LE/LT 110
	120	LE/LT 120

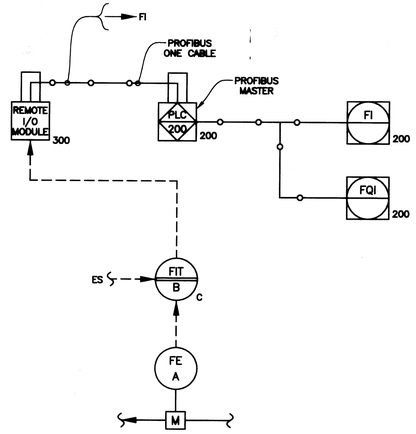

MAGNETIC FLOW METER – REMOTE TRANSMITTER

APPLICABLE FOR:	FLOW SENSOR A	TRANSMITTER B	CP C
	FE–301	FIT–301	CP 300

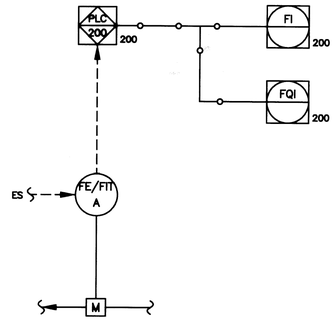

MAGNETIC FLOW METER – INTEGRAL TRANSMITTER

APPLICABLE FOR:	INTEGRAL FLOW SENSOR & TRANSMITTER A
	FE/FIT–101

AS BUILT

No.	Date	Revisions	App.

STATE OF TEXAS
DARRELL J. McADAMS
54522
LICENSED
PROFESSIONAL ENGINEER
02-03-08

klotz associates

Binkley & Barfield
consulting engineers
1710 Seamist Drive
Houston, Texas 77008-3189
(713) 869-3433

SURVEYED BY: GEOSOLUTIONS FIELD BOOK NO. : N/A

CITY OF HOUSTON
DEPARTMENT OF PUBLIC WORKS AND ENGINEERING

ALMEDA SIMS WWTP & SPF IMPROVEMENTS PACKAGE I

SLUDGE HOLDING TANKS - VALVE AND TRANSMITTER DETAILS P&ID

FILE NO:	WW4903
WBS:	R–000298–0004–4
DRAWING SCALE	NO SCALE
CITY OF HOUSTON PM	IRAJ RANJBAR, P.E.
DWG NO. :	I–111
SHEET NO.	44 OF 109

PUBLIC WORKS AND ENGINEERING
ACCEPTED & FILED
44488
CITY DRAWING NUMBER
HOUSTON, TEXAS

COLOR TABLE:

ORIGINAL SCALE IN INCHES FOR REDUCED PLANS
0 1 2 3

G:\115800 Almeda\CADD_I-112 Sludge Holding Tanks-Blower.dwg Feb 07,2008 - 10:20am swh

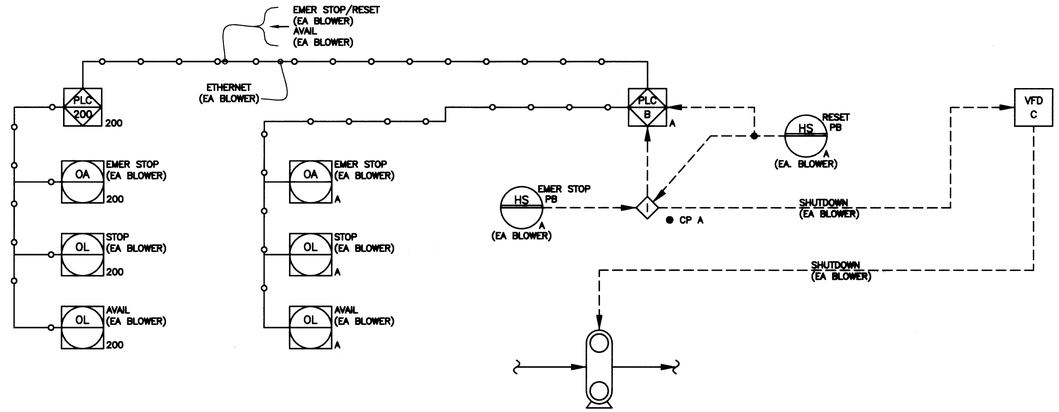

BLOWER EMERGENCY STOP PB'S APPLICABLE FOR:

BLOWER	TANK	CP A	PLC B	VFD C
BL 210	110	CP 210	PLC 210	VFD 210
BL 220	120	CP 220	PLC 220	VFD 220
BL 230*	---	---	---	---
BL 240**	110 OR 120	CP 240	PLC 240	VFD 240

*FUTURE
**BACK-UP

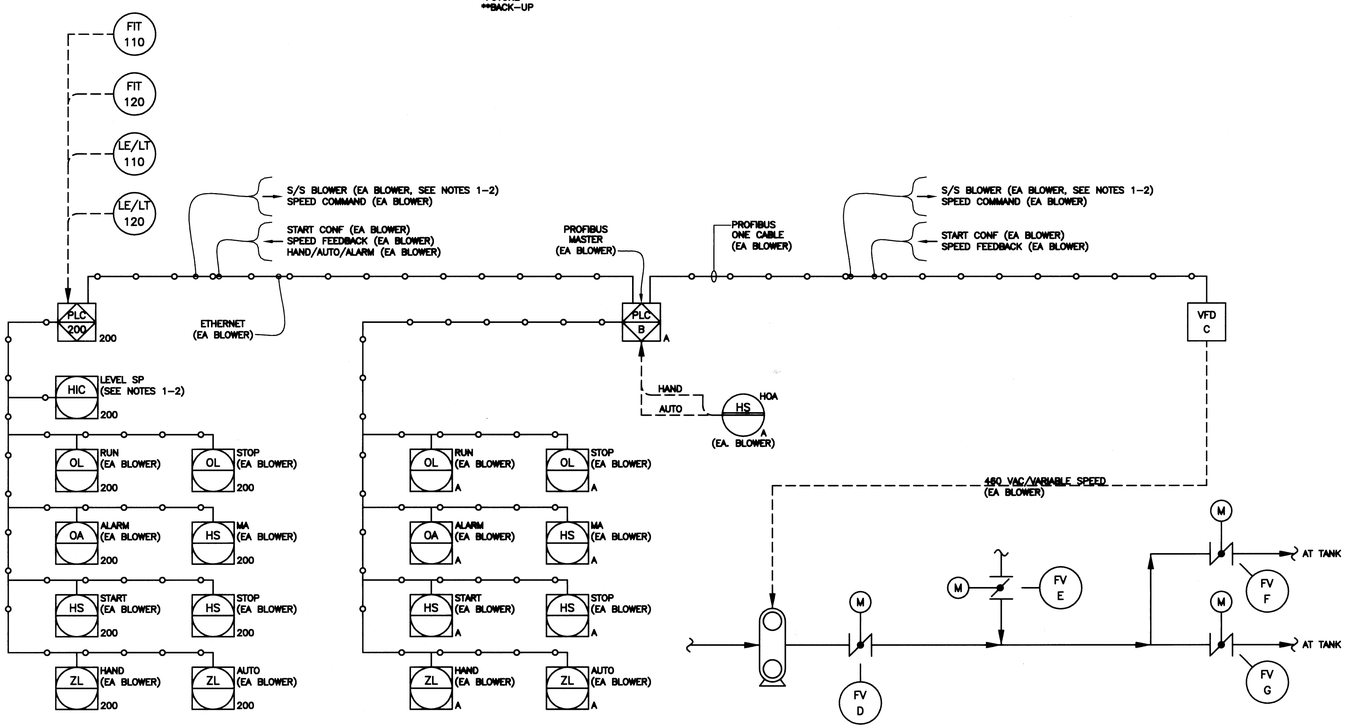

BLOWER START/STOP (S/S) CONTROL

APPLICABLE FOR:

BLOWER	TANK	CP A	PLC B	VFD C	FV D	FROM BL 240 BACK-UP FV E	AT TANK FV F	AT TANK FV G
BL 210	110	CP 210	PLC 210	VFD 210	FV 211	FV 241	FV 114A	FV 114B
BL 220	120	CP 220	PLC 220	VFD 220	FV 221	FV 242	FV 124A	FV 124B
BL 230*	---	---	---	---	---	---	---	---
BL 240**	110 OR 120	CP 240	PLC 240	VFD 240	SEE	ABOVE	N/A	N/A

*FUTURE
**BACK-UP

AS BUILT

LEGEND:

I/O – INPUT/OUTPUT
HMI – HUMAN/MACHINE/INTERFACE
MCC – MOTOR CONTROL CENTER
PB – PUSHBUTTON
S/S – START/STOP
SP – SETPOINT
MA – MANUAL/AUTO

NOTES:

1. REFER TO SPECIFICATION SECTION 13440 FOR DESCRIPTION OF LEVEL SETPOINTS.
2. PERMISSIVES MUST BE CONFIRMED BEFORE ANY BLOWER CAN BE STARTED, INCLUDING LEVELS IN NEW SLUDGE HOLDING TANKS AND AERATION AIR VALVE POSITIONS. REFER TO SPECIFICATION SECTION 13440.
3. BLOWER ALARMS ARE MONITORED BY THE INDIVIDUAL BLOWER LOCAL CONTROL PANEL AND PLC. REFER TO BLOWER EQUIPMENT SPECIFICATION SECTION AND SPECIFICATION SECTION 13440.

No.	Date	Revisions	App.

STATE OF TEXAS
DARRELL J. McADAMS
54522
LICENSED PROFESSIONAL ENGINEER
02-08-08

klotz associates

Binkley & Barfield consulting engineers
1710 Seamist Drive
Houston, Texas 77008-3189
(713) 869-3433

SURVEYED BY: GEOSOLUTIONS | FIELD BOOK NO. : N/A

CITY OF HOUSTON
DEPARTMENT OF PUBLIC WORKS AND ENGINEERING

ALMEDA SIMS WWTP & SPF IMPROVEMENTS PACKAGE I

SLUDGE HOLDING TANKS - BLOWER DETAILS P&ID

FILE NO:	WW4903
WBS:	R-000298-0004-4
DRAWING SCALE	
NO SCALE	
CITY OF HOUSTON PM	
IRAJ RANJBAR, P.E.	
DWG NO. :	I-112
SHEET NO.	45 OF 109

PUBLIC WORKS AND ENGINEERING ACCEPTED & FILED 44488 CITY DRAWING NUMBER HOUSTON, TEXAS

COLOR TABLE:

ORIGINAL SCALE IN INCHES FOR REDUCED PLANS
0 1 2 3

G:\115800 Almeda\CADD_I-113 Sludge Holding Tank - TWAS Details PID.dwg Feb 07,2008 - 11:16am swh

COLOR TABLE:

ORIGINAL SCALE IN INCHES
FOR REDUCED PLANS
0 1 2 3

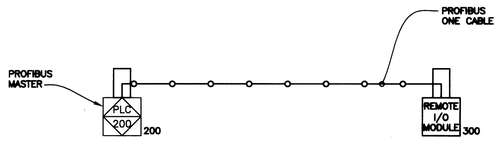

NEW PROFIBUS LAYOUT (PLC 200)

SEE SCADA NETWORK SCHEMATIC I-101
NEW CP 200 HMI IS NOT SHOWN

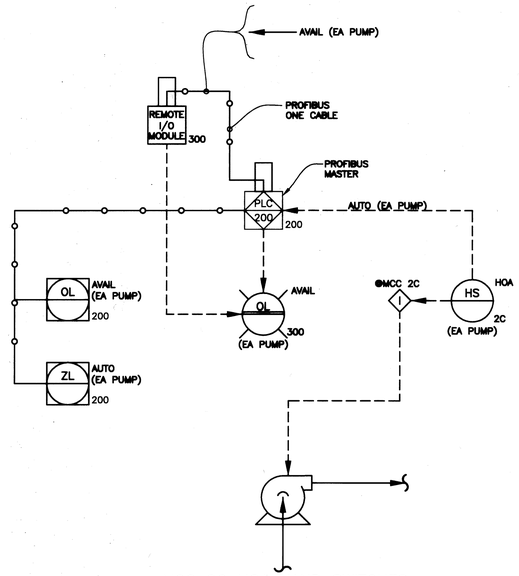

MCC 2C HOA HAND SWITCHES

APPLICABLE FOR : TWASP 310
TWASP 320
TWASP 330

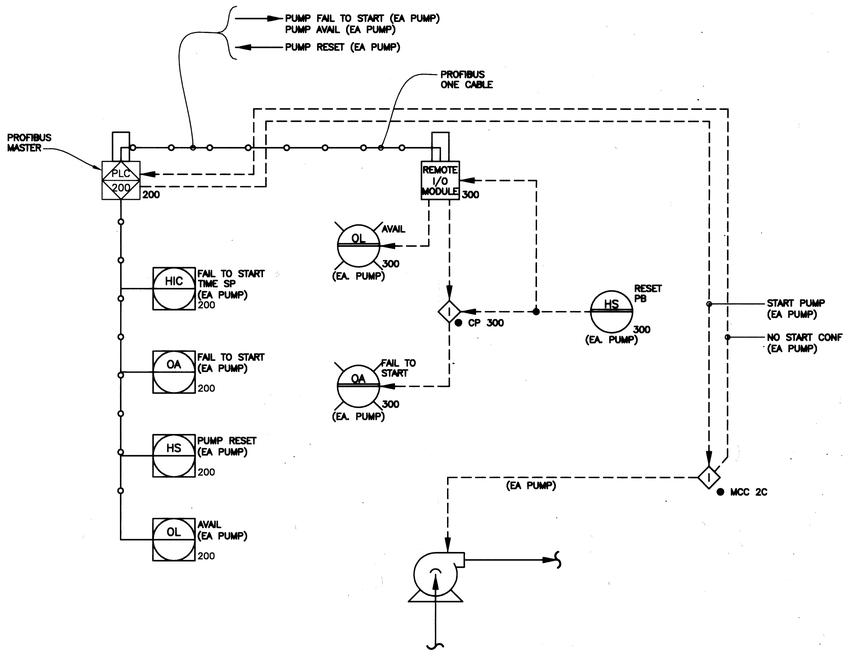

TWAS PUMP FAIL TO START ALARM

APPLICABLE FOR : TWASP 310
TWASP 320
TWASP 330

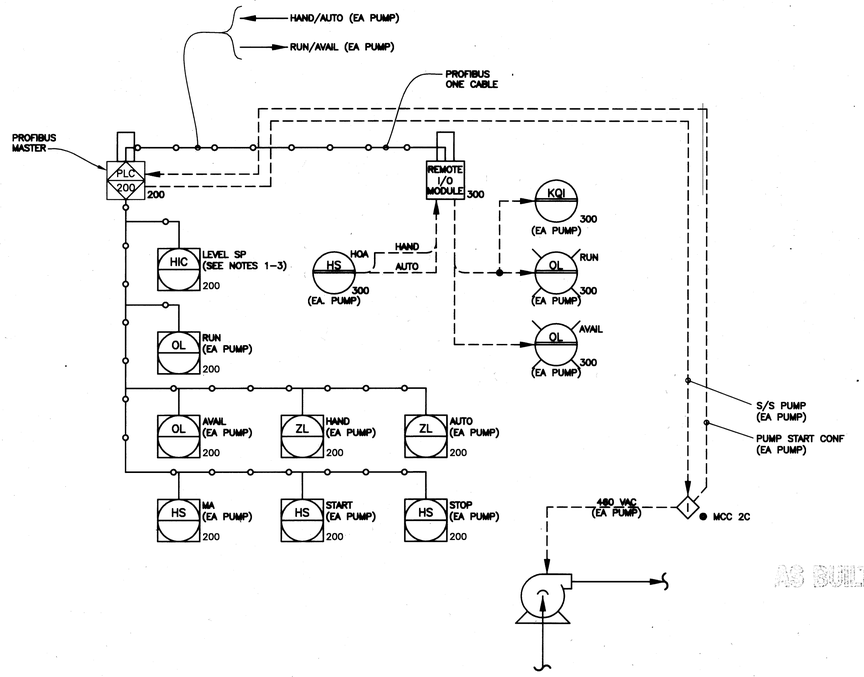

AS BUILT

TWAS PUMP START/STOP (S/S) CONTROL

APPLICABLE FOR : TWASP 310
TWASP 320
TWASP 330

LEGEND:

I/O – INPUT/OUTPUT
HMI – HUMAN/MACHINE/INTERFACE
MCC – MOTOR CONTROL CENTER
PB – PUSHBUTTON
S/S – START/STOP
SP – SETPOINT
MA – MANUAL/AUTO

NOTES:

1. REFER TO SPECIFICATION SECTION 13440 FOR DESCRIPTION OF LEVEL SETPOINTS,
2. TWAS PUMP LEVEL CONTROL IS NOT SHOWN. REFER TO SPECIFICATION SECTION 13440.
3. PERMISSIVES MUST BE CONFIRMED BEFORE ANY TWAS PUMP CAN BE STARTED, INCLUDING LEVELS IN NEW SLUDGE HOLDING TANKS AND EXISTING SLUDGE DAY TANK. REFER TO SPECIFICATION SECTION 13440.
4. REFER TO DWG I-103 FOR MOTOR CURRENT OVERLOAD ALARM.

No.	Date	Revisions	App.

STATE OF TEXAS
DARRELL J. McADAMS
54522
LICENSED PROFESSIONAL ENGINEER
02-08-08

klotz associates

Binkley & Barfield
consulting engineers
1710 Seamist Drive
Houston, Texas 77008-3189
(713) 869-3433

SURVEYED BY: GEOSOLUTIONS | FIELD BOOK NO. : N/A

CITY OF HOUSTON
DEPARTMENT OF PUBLIC WORKS AND ENGINEERING

ALMEDA SIMS WWTP & SPF IMPROVEMENTS PACKAGE I

SLUDGE HOLDING TANKS - TWAS PUMP DETAILS P&ID

FILE NO:	WW4903
WBS: R-000298-0004-4	
DRAWING SCALE	
NO SCALE	
CITY OF HOUSTON PM	
IRAJ RANJBAR, P.E.	
DWG NO. :	I-113
SHEET NO. 46 OF 109	

PUBLIC WORKS AND ENGINEERING
ACCEPTED & FILED
44488
CITY DRAWING NUMBER
HOUSTON, TEXAS

G:\115800 Almeda\CADD_M-100 WAS Demo Plan.dwg Feb 12,2008 - 9:48am mjd

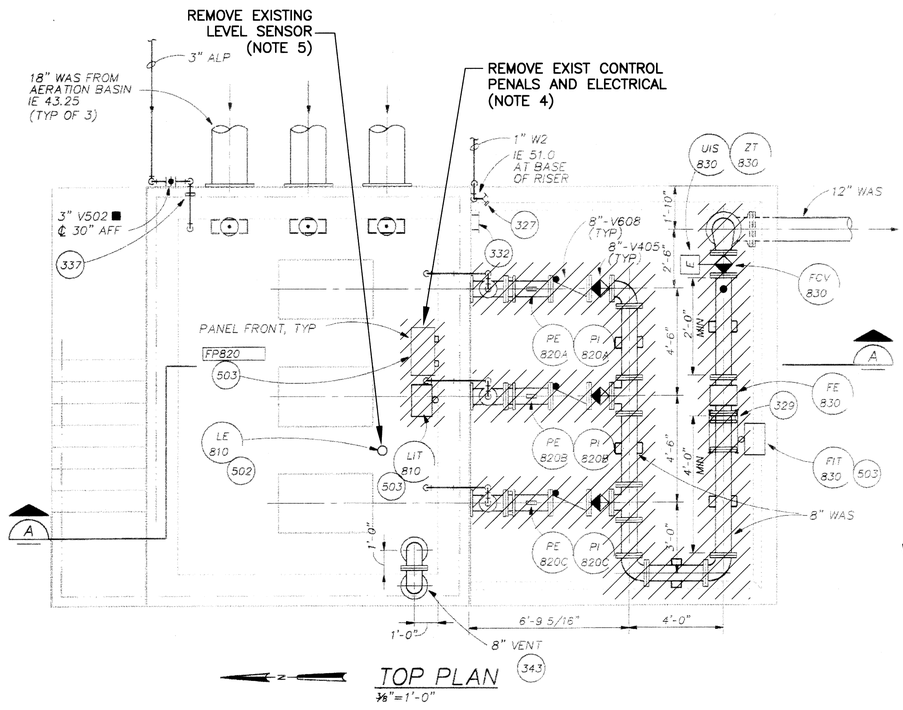

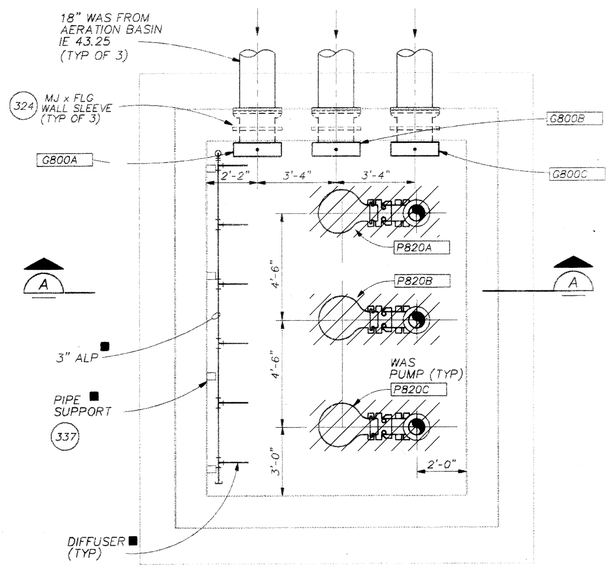

■ BY AERATION DIFFUSER MFR.
◆ BY PUMP MFR

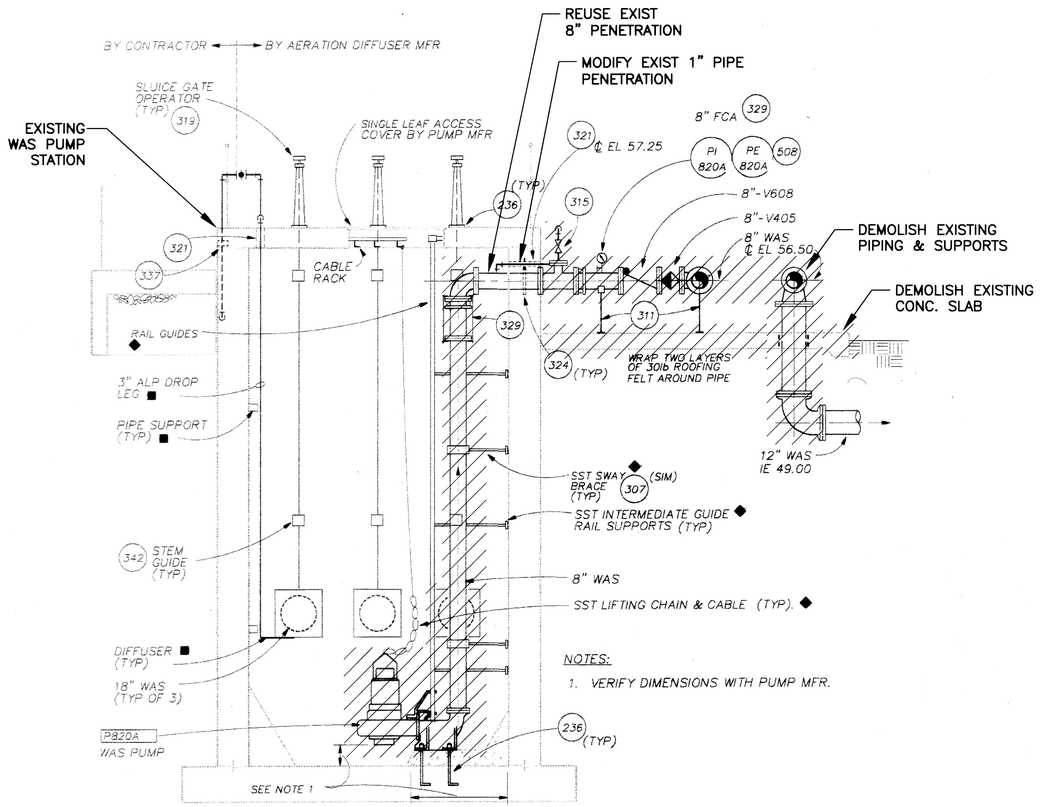

AS BUILT

NOTES:

1. REMOVE THE EXISTING WAS PUMPS, PIPING AND DELIVER TO CITY TO BE SALVAGED. DEMOLISH PIPING AND PIPE SUPPORTS.
2. REUSE THE EXISTING WALL PENETRATION FOR NEW PUMPS PIPING CONNECTIONS.
3. CLEAN UP THE EXISTING WAS PUMP STATION WELL WELL. REMOVE GRITS. REMOVE EXISTING PUMP SEATING, PIPING AND SUPPORTS.
4. REMOVE THE EXISTING ELECTRICAL, INSTRUMENTATION AND CONTROLS; AND DELIVER TO CITY TO BE SALVAGED. SEE ELEC. DRAWINGS FOR MORE DETAILS.
5. REMOVE THE EXISTING LEVEL SENSOR. MODIFY THE EXISTING FLANGED NOZZLE TO INSTALL STILLING WELL.
6. REFER TO DRAWING M-102 FOR THE LATEST NAVD 88 2001 ADJ. ELEVATION

LEGEND:

DEMOLITION LIMIT

No.	Date	Revisions	App.

STATE OF TEXAS
LI CHUNG CHEN
98576
REGISTERED PROFESSIONAL ENGINEER
2-11-08

klotz associates

Binkley & Barfield
consulting engineers
1710 Seamist Drive
Houston, Texas 77008-3189
(713) 869-3433

SURVEYED BY: GEOSOLUTIONS | FIELD BOOK NO. : N/A

CITY OF HOUSTON
DEPARTMENT OF PUBLIC WORKS AND ENGINEERING

ALMEDA SIMS WWTP & SPF IMPROVEMENTS PACKAGE I

DEMOLITION PLAN - EXISTING WAS PUMPS AND PIPING

FILE NO:	WW4903
WBS:	R-000298-0004-4
DRAWING SCALE	1/4" = 1'-0"
CITY OF HOUSTON PM	IRAJ RANJBAR, P.E.
DWG NO. :	M-100
SHEET NO.	47 OF 109

ACCEPTED & FILED
44488
CITY DRAWING NUMBER

COLOR TABLE:
ORIGINAL SCALE IN INCHES FOR REDUCED PLANS
0 1 2 3

G:\15800 Almeda Sims Package I\CADD\AS BUILT_M-101 WAS Pump Layout & Piping Plan.dwg Nov 03,2011 - 1:41p

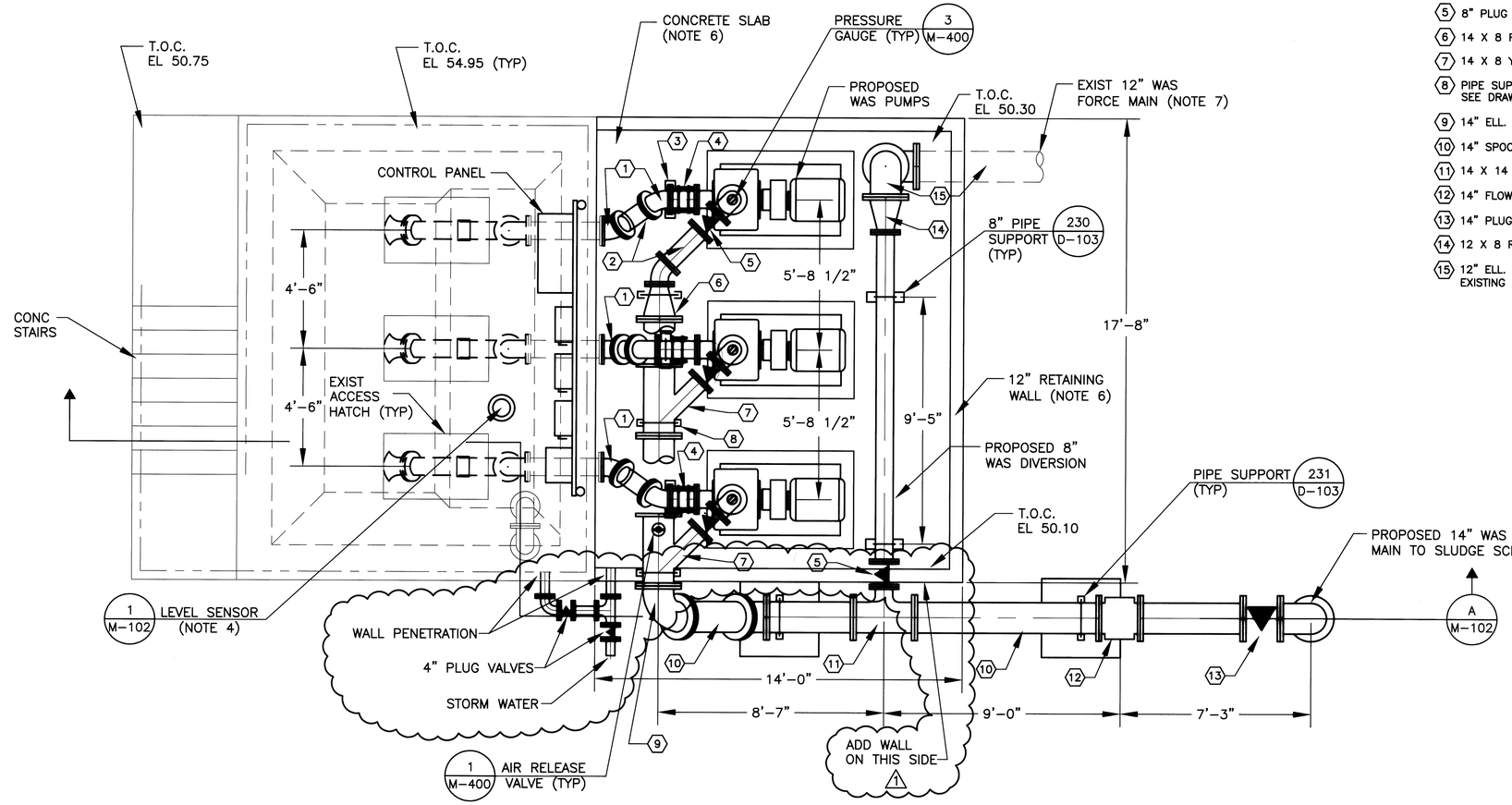

KEYED NOTES:

1. 8" 45° ELL. D.I.P.
2. 8" SPOOL FITTING, D.I.P.
3. PIPE SUPPORT FOR 8" PIPE (TYP.) SEE DRAWING D-103, DETAILS-230.
4. 8" DRESSER COUPLING
5. 8" PLUG VALVE.
6. 14 X 8 REDUCER & FITTING.
7. 14 X 8 Y-TEE ADAPTER.
8. PIPE SUPPORT FOR 14" PIPE (TYP.) SEE DRAWING D-103, DETAIL-231.
9. 14" ELL. D.I.P.
10. 14" SPOOL FITTING, D.I.P.
11. 14 X 14 X 8 REDUCER TEE.
12. 14" FLOW METER
13. 14" PLUG VALVE
14. 12 X 8 REDUCER & FITTING
15. 12" ELL. & SPOOL FITTING TO CONNECT TO EXISTING 12" WAS FORCE MAIN.

NOTES:

1. CLEAN UP THE EXISTING WAS PUMP STATION WELL WELL. REMOVE GRITS. REMOVE EXISTING PUMP SEATING, PIPING AND ELECTRICALS.
2. REUSE THE EXISTING WALL PENETRATION.
3. INSTALL NEW WAS PUMPS, PIPING, ELECTRICAL, INSTRUMENTATION AND CONTROLS.
4. REPLACE EXISTING ULTRASONIC LEVEL SENSOR WITH PRESSURE TRANSDUCER. MODIFY EXISTING FLANGED NOZZLE TO INSTALL 6" STILLING WELL.
5. PUMP HEAD CURVE IS BASED ON AN ACCEPTABLE MANUFACTURER'S PUMP CURVE.
6. SEE DRAWING S-106 FOR CONC. SLAB SECTION AND DETAILS.
7. REMOVE AND REPLACE EXISTING 12" WAS F.M. AS NECESSARY TO ADJUST PLAN AND PROFILE, SO THAT 12" WAS RISER IS LOCATED WITHIN NEW CONC. FOUNDATION.

WAS PUMP STATION SYSTEM HEAD CURVE

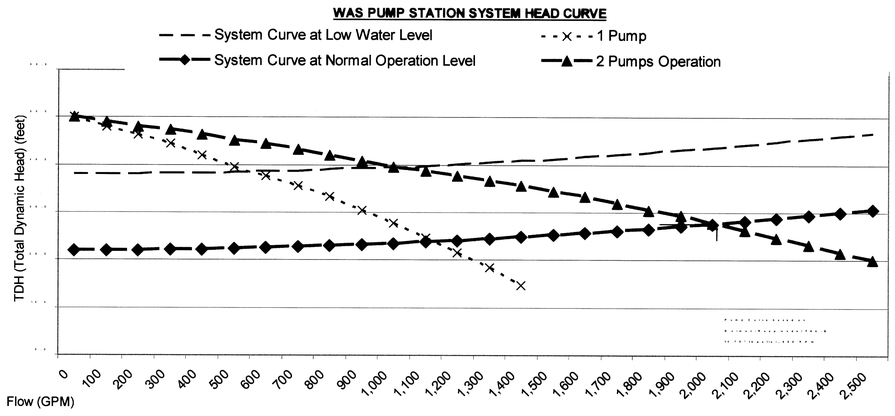

AS BUILT

No.	Date	Revisions	App.
1	11/03/11	ADDED WALL & DRAIN – AS BUILT	L.C.C.

STATE OF TEXAS
LI CHUNG CHEN
98576
REGISTERED PROFESSIONAL ENGINEER
2-11-08

klotz associates

Binkley & Barfield consulting engineers
1710 Seamist Drive
Houston, Texas 77008-3189
(713) 869-3433

SURVEYED BY: GEOSOLUTIONS | FIELD BOOK NO. : N/A

CITY OF HOUSTON
DEPARTMENT OF PUBLIC WORKS AND ENGINEERING

ALMEDA SIMS WWTP & SPF IMPROVEMENTS PACKAGE I

PROPOSED WAS PUMPS LAYOUT AND PIPING PLAN

FILE NO:	WW4903
WBS:	R-000298-0004-4
DRAWING SCALE	3/8" = 1'-0"
CITY OF HOUSTON PM	IRAJ RANJBAR, P.E.
DWG NO. :	M-101
SHEET NO.	48 OF 109

PUBLIC WORKS AND ENGINEERING ACCEPTED & FILED CITY DRAWING NUMBER HOUSTON, TEXAS

COLOR TABLE:

ORIGINAL SCALE IN INCHES FOR REDUCED PLANS
0 1 2 3

G:\115800 Almeda Sims Package I\CADD\AS BUILT\M-102 WAS Pump Layout & Piping Elevation.dwg Nov 03,2011 - COLOR TABLE:

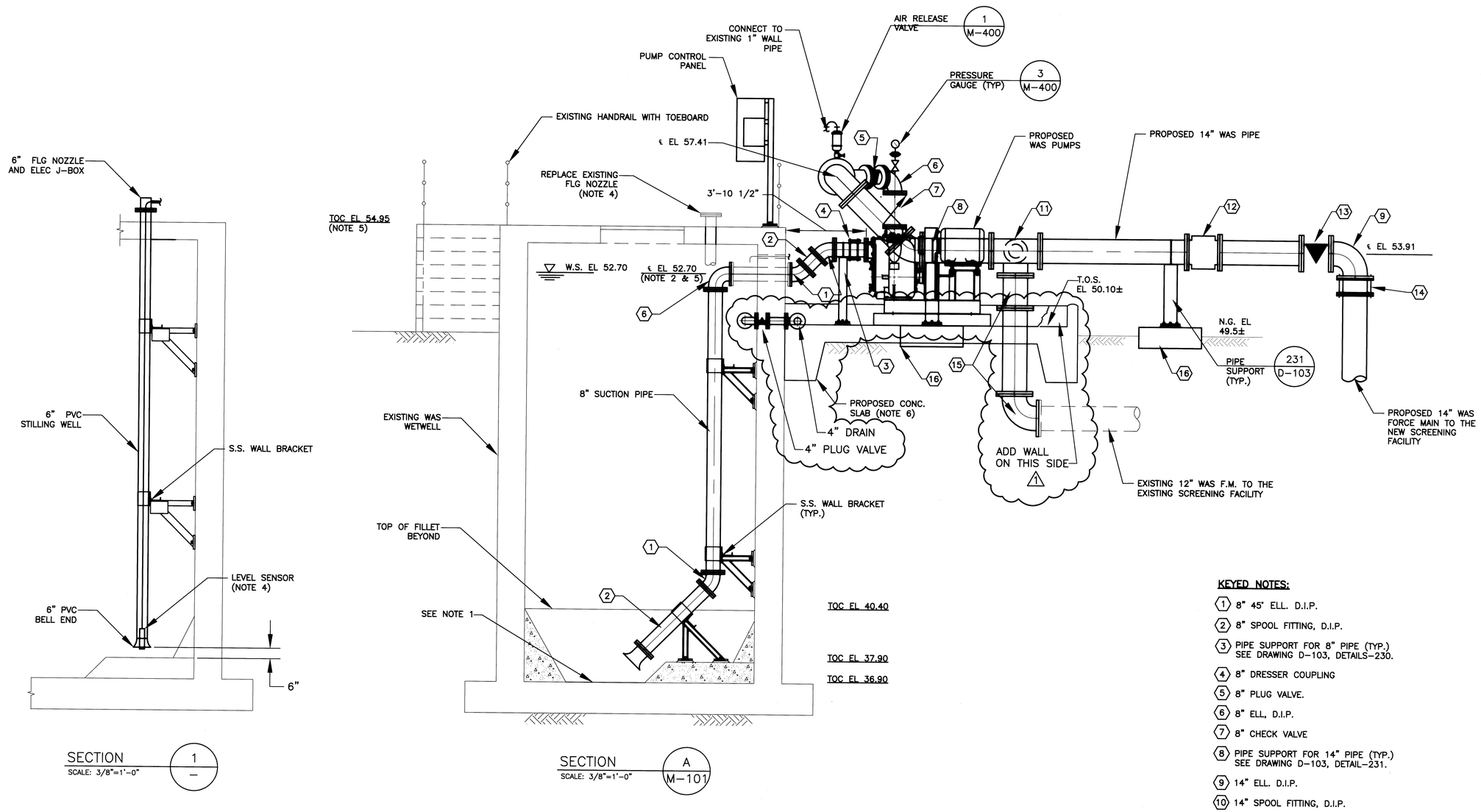

NOTES:

1. CLEAN UP THE EXISTING WAS PUMP STATION WET WELL. REMOVE GRITS, SCUM AND TRASH. REMOVE EXISTING PUMP SEATING, PIPING AND ELECTRICALS.
2. REUSE THE EXISTING WALL PENETRATION. CONTRACTOR SHALL FIELD VERIFY ELEV. OF THE EXISTING PIPE TO MAKE NEW PIPE CONNECTIONS FIT.
3. INSTALL NEW WAS PUMPS, PIPING, ELECTRICAL, INSTRUMENTATION AND CONTROLS.
4. REPLACE EXISTING ULTRASONIC LEVEL SENSOR WITH PRESSURE TRANSDUCER. MODIFY EXISTING FLANGED NOZZLE TO INSTALL 6" STILLING WELL.
5. THE EXISTING PUMP STATION ELEVATION IS REVISED ACCORDING TO NAVD 88 2001 ADJUSTMENT.
6. SEE DRAWING S-106 FOR CONC. SLAB SECTIONS AND DETAILS.
7. REMOVE AND REPLACE EXISTING 12" WAS F.M. AS NECESSARY TO ADJUST PLAN AND PROFILE, SO THAT 12" WAS RISER IS LOCATED WITHIN NEW CONC. FOUNDATION.

KEYED NOTES:

1. 8" 45° ELL. D.I.P.
2. 8" SPOOL FITTING, D.I.P.
3. PIPE SUPPORT FOR 8" PIPE (TYP.) SEE DRAWING D-103, DETAILS-230.
4. 8" DRESSER COUPLING
5. 8" PLUG VALVE.
6. 8" ELL, D.I.P.
7. 8" CHECK VALVE
8. PIPE SUPPORT FOR 14" PIPE (TYP.) SEE DRAWING D-103, DETAIL-231.
9. 14" ELL. D.I.P.
10. 14" SPOOL FITTING, D.I.P.
11. 14 X 14 X 8 REDUCER TEE.
12. 14" FLOW METER, TAG: FE-601
13. 14" PLUG VALVE
14. 14" DRESSER COUPLING
15. 12" ELL. & SPOOL FITTING TO CONNECT TO EXISTING 12" WAS FORCE MAIN.
16. 36 X 36 X 12 CONC. BASE FOR 14" PIPE SUPPORT (TYP.) SEE DRAWING D-101, DETAIL 218

AS BUILT

No.	Date	Revisions	App.
1	11/03/11	ADDED WALL & DRAIN – AS BUILT	LCC

STATE OF TEXAS
LI CHUNG CHEN
98576
REGISTERED PROFESSIONAL ENGINEER
2-11-08

klotz associates

Binkley & Barfield
consulting engineers
1710 Seamist Drive
Houston, Texas 77008-3189
(713) 869-3433

SURVEYED BY: GEOSOLUTIONS | FIELD BOOK NO. : N/A

CITY OF HOUSTON
DEPARTMENT OF PUBLIC WORKS AND ENGINEERING

ALMEDA SIMS WWTP & SPF IMPROVEMENTS PACKAGE I

PROPOSED WAS PUMPS ELEVATION AND SECTIONS

FILE NO:	WW4903
WBS:	R-000298-0004-4
DRAWING SCALE	3/8" = 1'-0"
CITY OF HOUSTON PM	IRAJ RANJBAR, P.E.
DWG NO. :	M-102
SHEET NO.	49 OF 109

PUBLIC WORKS AND ENGINEERING ACCEPTED & FILED CITY DRAWING NUMBER HOUSTON, TEXAS

ORIGINAL SCALE IN INCHES FOR REDUCED PLANS
0 1 2 3

G:\115800 Almeda\CADD_M-200 Prop Screen Site Plan.dwg Feb 12,2008 - 9:46am mjd

COLOR TABLE:

ORIGINAL SCALE IN INCHES
FOR REDUCED PLANS
0 1 2 3

NOTES:

1. REMOVE THE EXISTING WAS PUMPS, TO BE SALVAGED BY CITY. DEMOLISH PIPING AND SUPPORTS.
2. CLEAN UP THE EXISTING WAS PUMP SITE. REMOVE EXISTING SLAB, PIPING AND SUPPORTS.
3. SEE DRAWING C-402 FOR PROPOSED SEWER DRAIN MANHOLES.
4. CONTRACTOR SHALL PERFORM GROUND PROBING AND POTHOLE TESTING TO AVOID EXISTING DUCTBANK OR PIPES.

PROPOSED 12" PROCESS DRAIN TO MANHOLE #7

PROCESS DRAIN MANHOLE (TYP)

B M-203

C M-204

A M-202

COORDINATE
N: 13,795,299.26
E: 3,109,610.27

PROPOSED 100-FT GRAVITY THICKENER

PROPOSED 14" WAS FORCEMAIN

14" WAS SCREENING DISCHARGE PIPE

EXISTIN THICKENER

PROPOSED 4" NPW

EXISTING SCREENS FACILTY

DEMOLISH EXISTING WAS PUMPS (NOTE 1)

AS BUILT

No.	Date	Revisions	App.

STATE OF TEXAS
LI CHUNG CHEN
98576
REGISTERED PROFESSIONAL ENGINEER
2-11-08

klotz associates

Binkley & Barfield
consulting engineers
1710 Seamist Drive
Houston, Texas 77008-3189
(713) 869-3433

SURVEYED BY: GEOSOLUTIONS | FIELD BOOK NO. : N/A

CITY OF HOUSTON
DEPARTMENT OF PUBLIC WORKS AND ENGINEERING

ALMEDA SIMS WWTP & SPF IMPROVEMENTS PACKAGE I

PROPOSED SLUDGE SCREENING FACILITY SITE PLAN

FILE NO:	WW4903
WBS:	R-000298-0004-4
DRAWING SCALE	3/16" = 1'-0"
CITY OF HOUSTON PM	IRAJ RANJBAR, P.E.
DWG NO. :	M-200
SHEET NO.	50 OF 109

PUBLIC WORKS AND ENGINEERING
ACCEPTED & FILED
44488
CITY DRAWING NUMBER
HOUSTON, TEXAS

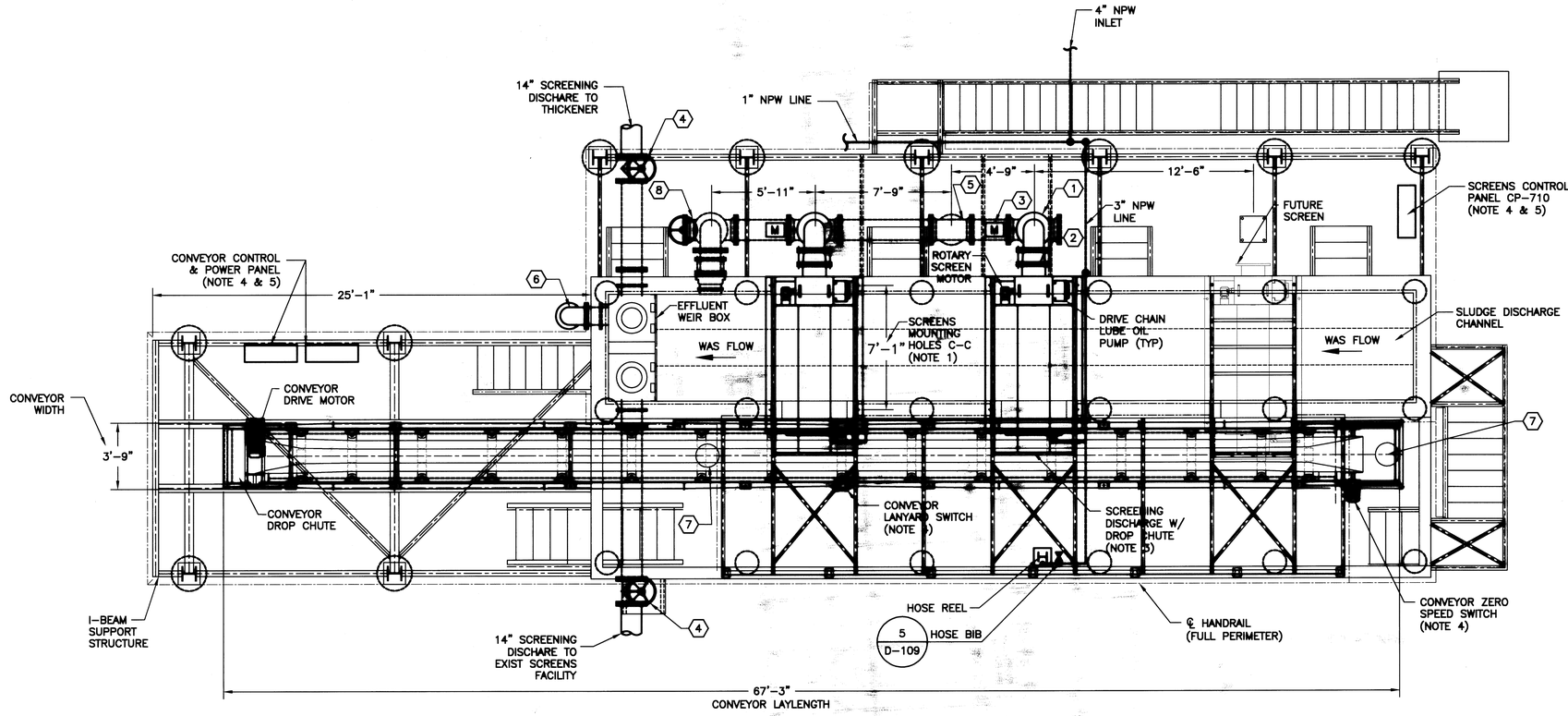

PROPOSED SCREENING FACILITY PLAN

KEYED NOTES:

1. 14" ELL. & FITTING, D.I.P.
2. 14" DRESSER COUPLING
3. 14" PLUG VALVE W/ ELEC ACTUATOR.
4. 14" PLUG VALVE W/ EXTENDED OPERATOR AND FLOOR STANCHION (TYP).
5. 14" WAS F.M. INLET.
6. 12" OVERFLOW DRAIN, ELL & SPOOL FITTING, D.I.P.
7. 12" FLOOR DRAIN
8. 14" PLUG VALVE W/ OPEN & CLOSED LIMIT SWITCHES (DRY CONTACTS FOR 24VDC). INCLUDE EXTENDED OPERATOR AND FLOOR STANCHION.

NOTES:

1. DIMENSIONS SHOWN ARE BASED ON USING HYCOR MODEL ROTOSHEAR HRS3672. USE OF OTHER SCREENS MODEL MAY REQUIRE MODIFICATION OF THE STRUCTURE TO FIT. SEE SPEC SECTION 11070 FOR DETAILS OF ROTARY SCREENS.
2. GRATINGS NOT SHOWN FOR CLARITY. SEE DRAWING S-105 FOR SCREENING FACILITY GRATING PLAN.
3. COORDINATE SCREENING SOLID DROP CHUTE POSITION CENTERED ON BELT CONVEYOR.
4. CONVEYOR OPERATION INTERLOCK WITH SCREENS OPERATION. SEE SPEC SECTIONS 11070, 14551 AND 13440 FOR DETAILS.
5. SEE ELECTRICAL DRAWINGS FOR POWER AND CONDUITS PLAN.
6. SEE DRAWING I-104 & 105 FOR INSTRUMENTATION AND CONTROLS.
7. PROVIDE NPW LINES (D.I. PIPE FOR UNDERGRADE, CPVC 80 FOR ABOVE GRADE) WITH S.S. BRACKETS AND S.S. PIPE HANGERS. SHOWN APPROXIMATE ROUTE. FIELD VERIFY AND FIT.

No.	Date	Revisions	App.

STATE OF TEXAS
LI CHUNG CHEN
98576
REGISTERED PROFESSIONAL ENGINEER
2-11-08

klotz associates

Binkley & Barfield
consulting engineers
1710 Seamist Drive
Houston, Texas 77008-3189
(713) 869-3433

SURVEYED BY: GEOSOLUTIONS | FIELD BOOK NO. : N/A

CITY OF HOUSTON
DEPARTMENT OF PUBLIC WORKS AND ENGINEERING

ALMEDA SIMS WWTP & SPF IMPROVEMENTS PACKAGE I

PROPOSED SCREENING FACILITY PLAN

FILE NO:	WW4903
WBS:	R-000298-0004-4
DRAWING SCALE	1/4" = 1'-0"
CITY OF HOUSTON PM	
IRAJ RANJBAR, P.E.	
DWG NO. :	M-201
SHEET NO.	51 OF 109

ACCEPTED & FILED
44488
CITY DRAWING NUMBER
HOUSTON, TEXAS

AS BUILT

G:\115800 Almeda\CADD_M-201 Prop Sludge Screen Plan.dwg Feb 12,2008 - 9:43am mjd

COLOR TABLE:

ORIGINAL SCALE IN INCHES FOR REDUCED PLANS
0 1 2 3

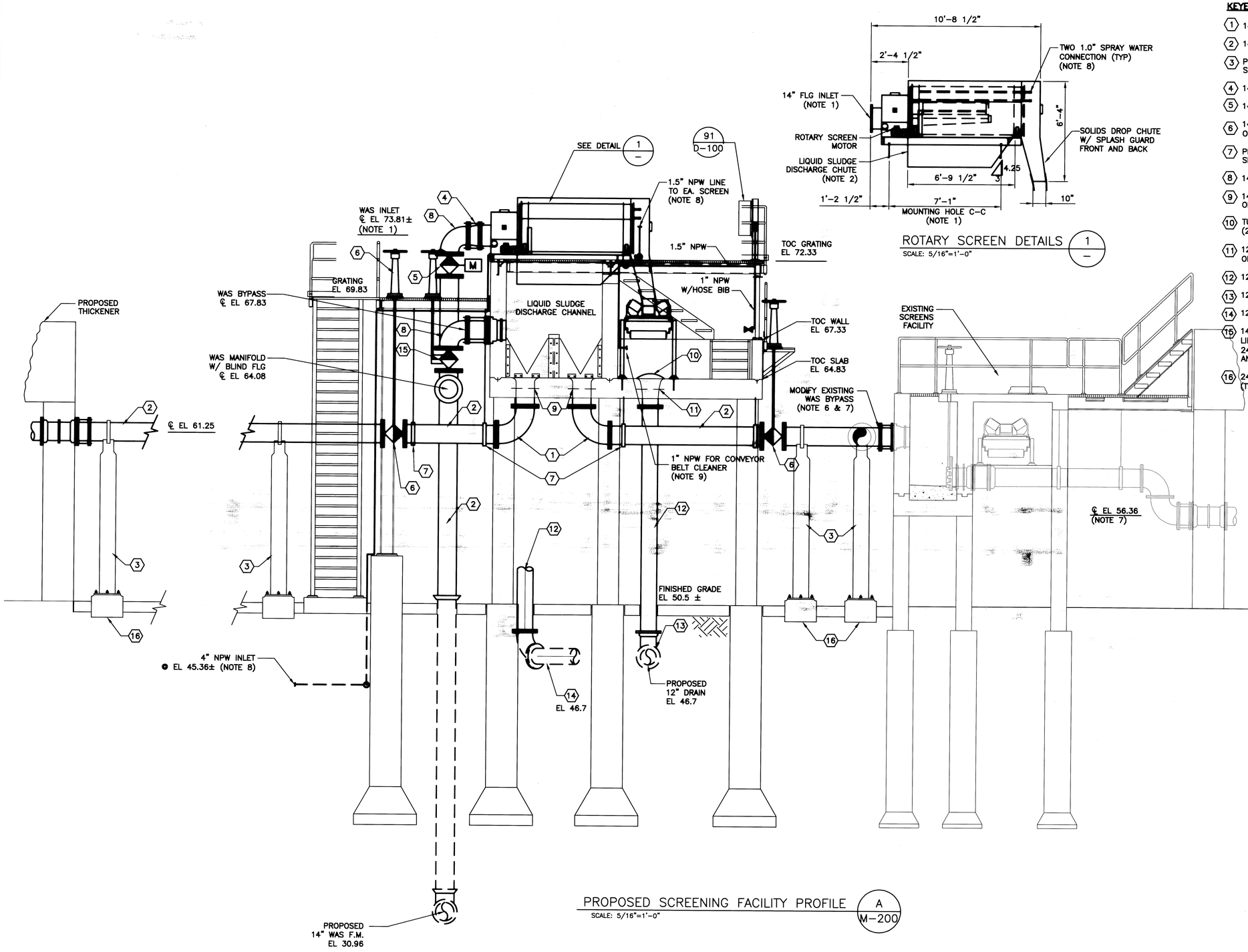

KEYED NOTES:

1. 14" 90° LONG ELL. D.I.P.
2. 14" SPOOL FITTING, D.I.P.
3. PIPE SUPPORT FOR 14" PIPE (TYP.) SEE DRAWING D-103, DETAILS-231.
4. 14" DRESSER COUPLING
5. 14" PLUG VALVE W/ ELEC ACTUATOR.
6. 14" PLUG VALVE W/ EXTENDED OPERATOR AND FLOOR STANCHION (TYP).
7. PIPE HANGER FOR 14" PIPE (TYP.) SEE DRAWING D-102, DETAIL-224.
8. 14" ELL. D.I.P.
9. 14" FLG END WALL PIPE W/16.5" OPENING
10. TURTLEBACK GRATE NEENAH R-4360-A (2 PLCS) (16.5" INSIDE)
11. 12" FLG END WALL PIPE WITH 16.5" OPENING (TYP 2 PLACES)
12. 12" DRAIN, D.I.P.
13. 12" ELL. & SPOOL FITTING.
14. 12" DRAIN, PVC.
15. 14" PLUG VALVE W/ OPEN & CLOSED LIMIT SWITCHES (DRY CONTACTS FOR 24VDC). INCLUDE EXTENDED OPERATOR AND FLOOR STANCHION.
16. 24"X24"X12" PIPE SUPPORT FOUNDATION (TYP). SEE D-104, DETAIL 249

NOTES:

1. DIMENSIONS SHOWN ARE BASED ON USING HYCOR MODEL ROTOSHEAR HRS3672, USE OF OTHER SCREENS MODEL MAY REQUIRE MODIFICATION OF THE STRUCTURE TO FIT. SEE SPEC SECTION 11070 FOR DETAILS OF ROTARY SCREENS.
2. PROVIDE FABRICATED S.S. LIQUID DISCHARGE CHUTE (APPROX. 82" X 56" X 24") BY ROTARY SCREEN MANUFACTURE TO FIT WAS CHANNEL STRUCTURE.
3. COORDINATE SCREENING SOLID DROP CHUTE POSITION TO BE CENTERED ON BELT CONVEYOR.
4. CONVEYOR OPERATION INTERLOCK WITH SCREENS OPERATION. SEE SPEC SECTIONS 11070, 14551 AND 13440 FOR DETAILS.
5. SEE STRUCTURE DRAWINGS FOR STAIR, HAND RAILING, GRATING AND LANDING DETAILS.
6. REMOVE THE EXISTING BYPASS 90 ELL. INSTALL A 14" TEE & ADAPTER TO CONNECT WAS DISCHARGE FROM THE NEW SCREENING FACILITY.
7. CONTRACTOR SHALL FIELD VERIFY THE EXISTING SCREENING STRUCTURE ELEVATION, AND EXISTING PIPING ELEVATION TO MAKE PIPING CONNECTIONS.
8. PROVIDE NON-POTABLE WATER (NPW) LINES (D.I. PIPE FOR UNDERGRADE, CPVC SCH 80 FOR ABOVE GRADE) WITH S.S. BRACKETS AND S.S. PIPE HANGERS. SHOWN ONLY APPROXIMATE ROUTE. FIELD VERIFY AND FIT.
   EACH SCREEN REQUIRES TWO 1" NPW CONNECTIONS FOR SPRAY WATER. PROVIDE ISOLATION VALVE & PRESSURE REDUCER SPECIFIED BY ROTARY SCREEN MANUFACTURER.
9. PROVIDE NPW CONNECTION FOR BELT CONVEYOR CLEANING MECHANISM. REFER TO SPEC 14551.
10. PROPOSED SCREENING FACILITY ELEVATION IS BASED ON NAVD 88 2001 ADJUSTED.

No.	Date	Revisions	App.

STATE OF TEXAS
LI CHUNG CHEN
98576
REGISTERED PROFESSIONAL ENGINEER
2-11-08

klotz associates

Binkley & Barfield
consulting engineers
1710 Seamist Drive
Houston, Texas 77008-3189
(713) 869-3433

SURVEYED BY: GEOSOLUTIONS | FIELD BOOK NO. : N/A

CITY OF HOUSTON
DEPARTMENT OF PUBLIC WORKS AND ENGINEERING

ALMEDA SIMS WWTP & SPF IMPROVEMENTS PACKAGE I

PROPOSED SCREENING FACILITY PROFILE

FILE NO:	WW4903
WBS:	R-000298-0004-4
DRAWING SCALE	5/16" = 1'-0"
CITY OF HOUSTON PM	IRAJ RANJBAR, P.E.
DWG NO. :	M-202
SHEET NO.	52 OF 109

PUBLIC WORKS AND ENGINEERING ACCEPTED & FILED 44488 CITY DRAWING NUMBER HOUSTON, TEXAS

COLOR TABLE:

ORIGINAL SCALE IN INCHES FOR REDUCED PLANS
0 1 2 3

G:\115800 Almeda\CADD_M-202 Prop Screen Layout Profile.dwg Feb 12,2008 - 9:42am mjd

G:\115800 Almeda\CADD_M-203&4 Prop Sludge Screen Profile.dwg Feb 12,2008 - 10:42am mjd

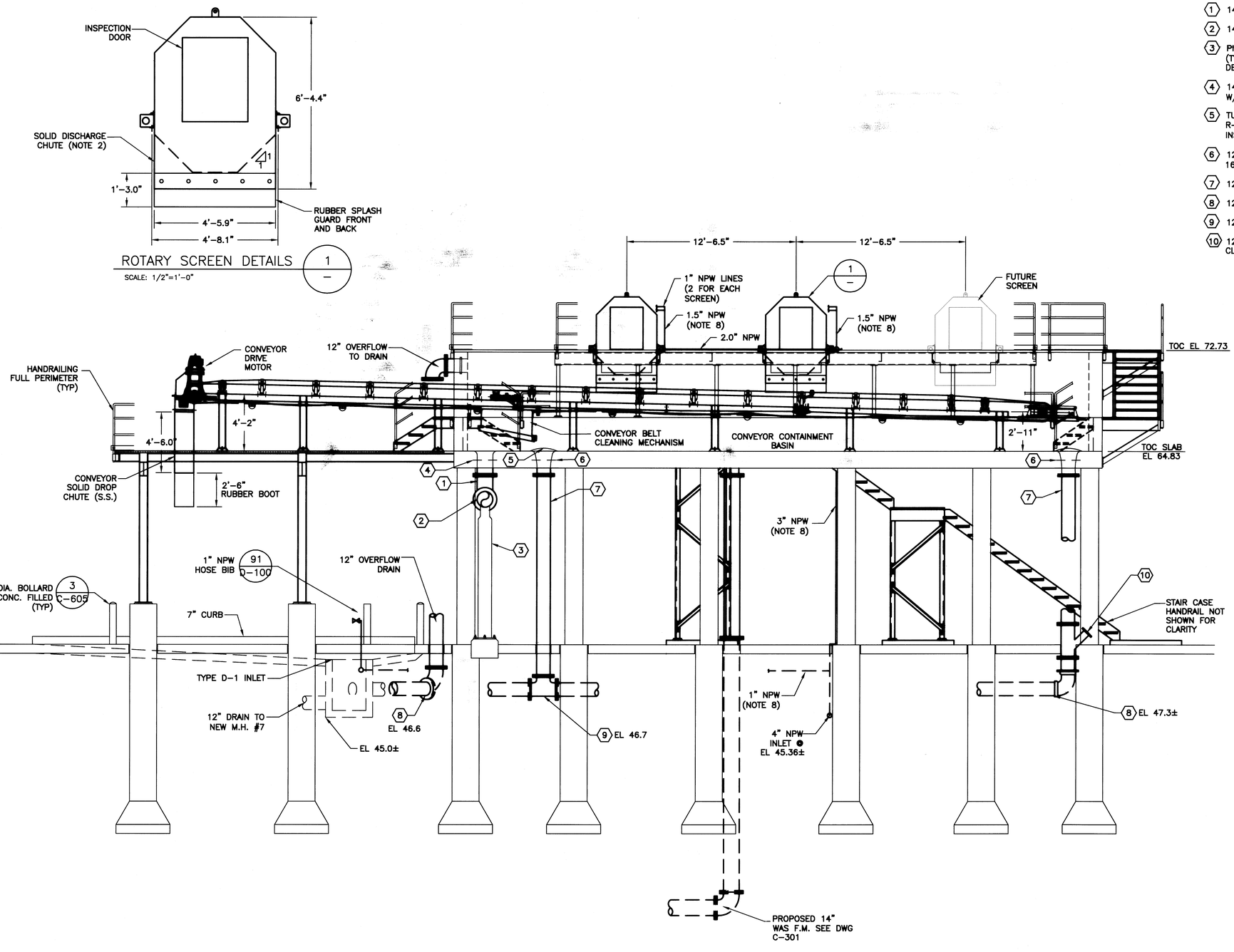

ROTARY SCREEN DETAILS — 1 / —
SCALE: 1/2"=1'-0"

SCREENING FACILITY PROFILE WEST ELEVATION — B / M-200
SCALE: 1/4"=1'-0"

KEYED NOTES:

1. 14" 90° LONG ELL. D.I.P.
2. 14" SPOOL FITTING, D.I.P.
3. PIPE SUPPORT FOR 14" PIPE (TYP.) SEE DRAWING D-103, DETAILS-231.
4. 14" FLANGE END WALL PIPE W/16.5" OPENING
5. TURTLEBACK GRATE NEENAH R-4360-A (2 PLCS) (16.5" INSIDE)
6. 12" FLANGE END WALL PIPE W/ 16.5" OPENING
7. 12" DRAIN, D.I.P.
8. 12" ELL & SPOOL FITTING
9. 12" TEE & SPOOL FITTING
10. 12"X12"X6" WYE WITH CAP FOR CLEANOUT.

NOTES:

1. DIMENSIONS SHOWN ARE BASED ON USING HYCOR MODEL ROTOSHEAR HRS3672. USE OF OTHER SCREENS MODEL MAY REQUIRE MODIFICATION OF THE STRUCTURE TO FIT. SEE SPEC SECTION 11070 FOR DETAILS OF ROTARY SCREENS.
2. PROVIDE FABRICATED S.S. SOLID DISCHARGE CHUTE FITTED WITH RUBBER SPLASH GUARD TO FIT BELT CONVEYOR ELEVATION.
3. SEE DRAWING M-200 FOR SCREENS FACILITY PLAN.
4. SEE ELECTRICAL DRAWING E-200 FOR POWER AND CONDUIT.
5. SEE STRUCTURE AND MECHANICAL DETAILS FOR STAIR, HANDRAILING, GRATING AND LANDING DETAILS.
6. CONTRACTOR MUST GROUND PROBING AND POTHOLE TESTING TO AVOID UNDERGROUND DUCTBANK OR PIPE LINE.
7. PROVIDE BELT CONVEYOR WITH 2% SLOPE TOWARD CONTAINMENT BASIN. SEE SPEC SECTION 14551 FOR DETAILS.
8. PROVIDE NPW LINES (D.I. PIPE FOR UNDERGRADE, CPVC 80 FOR ABOVE GRADE) WITH S.S. BRACKETS AND S.S. PIPE HANGERS. SHOWN APPROXIMATE ROUTE. CONTRACTOR SHALL FIELD VERIFY AND FIT.

No.	Date	Revisions	App.

STATE OF TEXAS
LI CHUNG CHEN
98576
REGISTERED PROFESSIONAL ENGINEER
2-11-08

klotz associates

Binkley & Barfield consulting engineers
1710 Seamist Drive
Houston, Texas 77008-3189
(713) 869-3433

SURVEYED BY: GEOSOLUTIONS | FIELD BOOK NO. : N/A

CITY OF HOUSTON
DEPARTMENT OF PUBLIC WORKS AND ENGINEERING

ALMEDA SIMS WWTP & SPF IMPROVEMENTS PACKAGE I

PROPOSED SCREENING FACILITY WEST ELEVATION

AS BUILT

FILE NO:	WW4903
WBS:	R-000298-0004-4
DRAWING SCALE	1/4" = 1'-0"
CITY OF HOUSTON PM	IRAJ RANJBAR, P.E.
DWG NO. :	M-203
SHEET NO.	53 OF 109

PUBLIC WORKS AND ENGINEERING
ACCEPTED & FILED
44488
CITY DRAWING NUMBER
HOUSTON, TEXAS

COLOR TABLE:

ORIGINAL SCALE IN INCHES FOR REDUCED PLANS
0 1 2 3

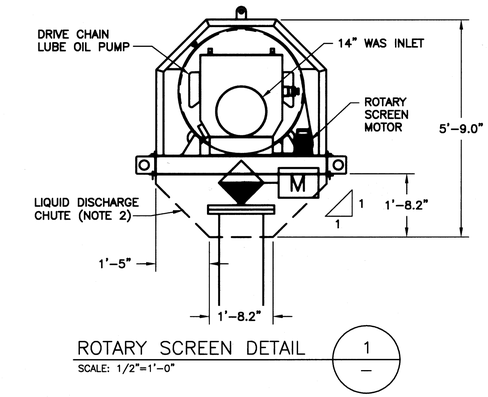

ROTARY SCREEN DETAIL 1/—

SCALE: 1/2"=1'-0"

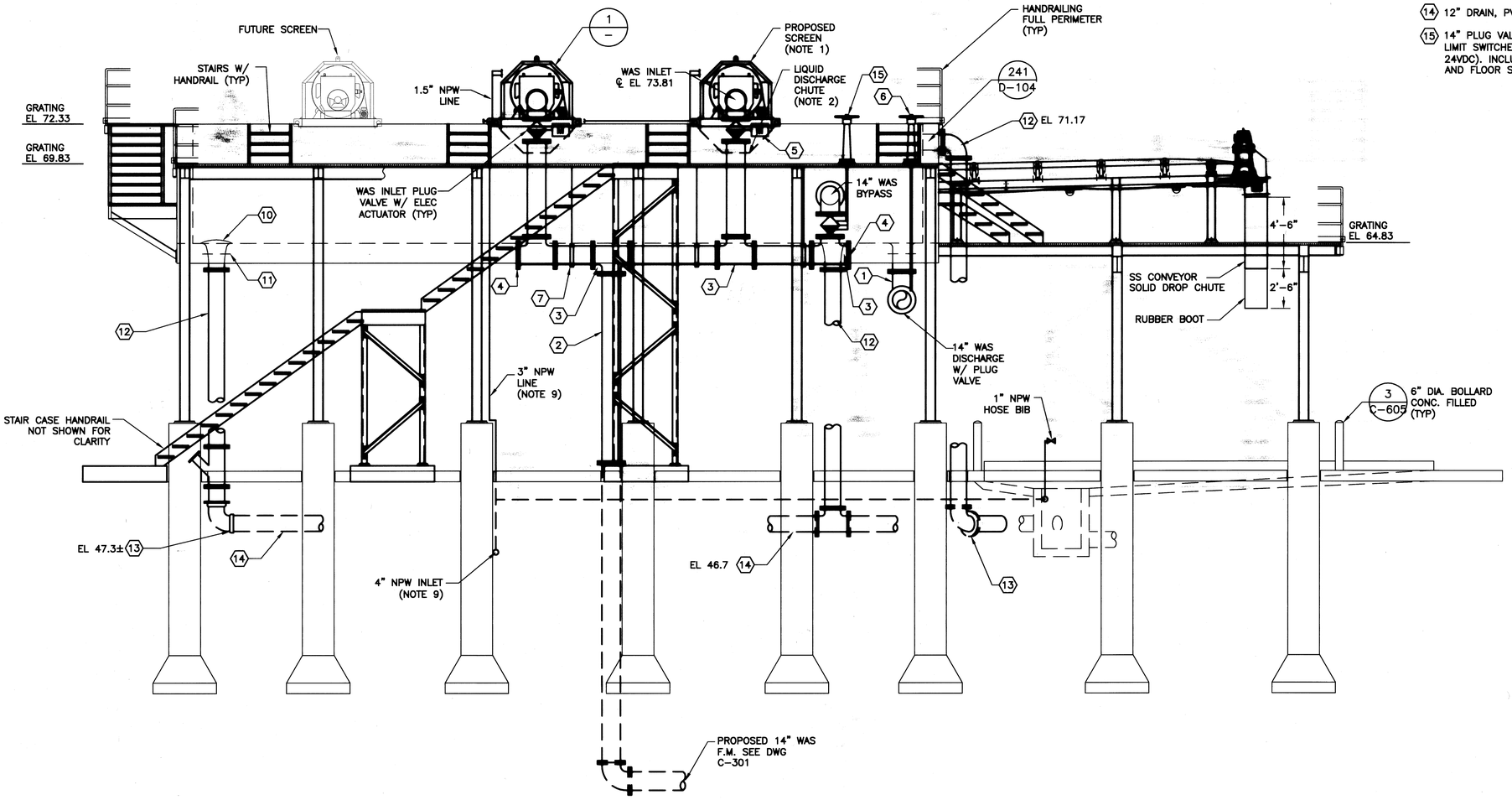

SCREENING FACILITY PROFILE EAST ELEVATION B/M-200

SCALE: 1/4"=1'-0"

AS BUILT

KEYED NOTES:

1. 14" 90° LONG ELL. D.I.P.
2. 14" SPOOL FITTING, D.I.P.
3. 14" TEE & SPOOL FITTING, DIP
4. 14" BLIND FLANGE
5. 14" PLUG VALVE W/ ELEC ACTUATOR
6. 14" PLUG VALVE W/ EXTENDED OPERATOR AND FLOOR STANCHION (TYP)
7. PIPE HANGER FOR 14" PIPE (TYP) SEE DRAWING D-102, DETAIL-224
8. 14" ELL. D.I.P.
9. 14" FLANGE END WALL PIPE
10. TURTLEBACK GRATE NEENAH R-4360-A (2 PLCS) (16.5" INSIDE)
11. 12" FLANGE END WALL PIPE W/ 16.5" OPENINGS
12. 12" ELL & SPOOL FITTING, D.I.P.
13. 12" PVC ELL & SPOOL FITTING
14. 12" DRAIN, PVC
15. 14" PLUG VALVE W/ OPEN & CLOSED LIMIT SWITCHES (DRY CONTACTS FOR 24VDC). INCLUDE EXTENDED OPERATOR AND FLOOR STANCHION.

NOTES:

1. DIMENSIONS SHOWN ARE BASED ON USING HYCOR MODEL ROTOSHEAR HRS3672. USE OF OTHER SCREENS MODEL MAY REQUIRE MODIFICATION OF THE STRUCTURE TO FIT. SEE SPEC SECTION 11070 FOR DETAILS OF ROTARY SCREENS.
2. 82" X 56" X 24" FABRICATED S.S. LIQUID DISCHARGE CHUTE BY ROTARY SCREEN MANUFACTURE TO FIT WAS CHANNEL STRUCTURE.
3. SEE DRAWING M-200 FOR SCREENS FACILITY PLAN.
4. SEE ELECTRICAL DRAWING E-200 FOR POWER AND CONDUIT.
5. SEE STRUCTURE AND MECHANICAL DETAILS FOR STAIR, HANDRAILING, GRATING AND LANDING DETAILS.
6. CONTRACTOR MUST GROUND PROBING AND POTHOLE TESTING TO AVOID UNDERGROUND DUCTBANK OR PIPE LINE.
7. PROVIDE ELEC ACTUATOR FOR SCREENS INLET PLUG VALVE.
8. PROVIDE EXTENDED OPERATOR WITH FLOOR STAND FOR BYPASS PLUG VALVE, AND DISCHARGE PLUG VALVES.
9. PROVIDE NPW LINES (D.I. PIPE FOR UNDERGRADE, CPVC 80 FOR ABOVE GRADE) WITH S.S. BRACKETS AND S.S. PIPE HANGERS. SHOWN APPROXIMATE ROUTE. CONTRACTOR SHALL FIELD VERIFY AND FIT.

No.	Date	Revisions	App.

STATE OF TEXAS
LI CHUNG CHEN
98576
REGISTERED PROFESSIONAL ENGINEER
2-11-08

klotz associates

Binkley & Barfield
consulting engineers
1710 Seamist Drive
Houston, Texas 77008-3189
(713) 869-3433

SURVEYED BY: GEOSOLUTIONS | FIELD BOOK NO. : N/A

CITY OF HOUSTON
DEPARTMENT OF PUBLIC WORKS AND ENGINEERING

ALMEDA SIMS WWTP & SPF IMPROVEMENTS PACKAGE I

PROPOSED SCREENING FACILITY EAST ELEVATION

FILE NO:	WW4903
WBS:	R-000298-0004-4
DRAWING SCALE	1/4" = 1'-0"
CITY OF HOUSTON PM	IRAJ RANJBAR, P.E.
DWG NO. :	M-204
SHEET NO.	54 OF 109

PUBLIC WORKS AND ENGINEERING ACCEPTED & FILED
44488
CITY DRAWING NUMBER
HOUSTON, TEXAS

COLOR TABLE:

ORIGINAL SCALE IN INCHES FOR REDUCED PLANS
0 1 2 3

FILE: G:\115800 Almeda\CADD_M-203&4 Prop Sludge Screen Profile.dwg Feb 12,2008 - 9:31am mjd

J:\0620.002.000\07.00 CADD\Package 1 (Addendum)\Mechanical\Prop. MThickener Plan.dwg Dec 02,2011 - 8:15am

COLOR TABLE:

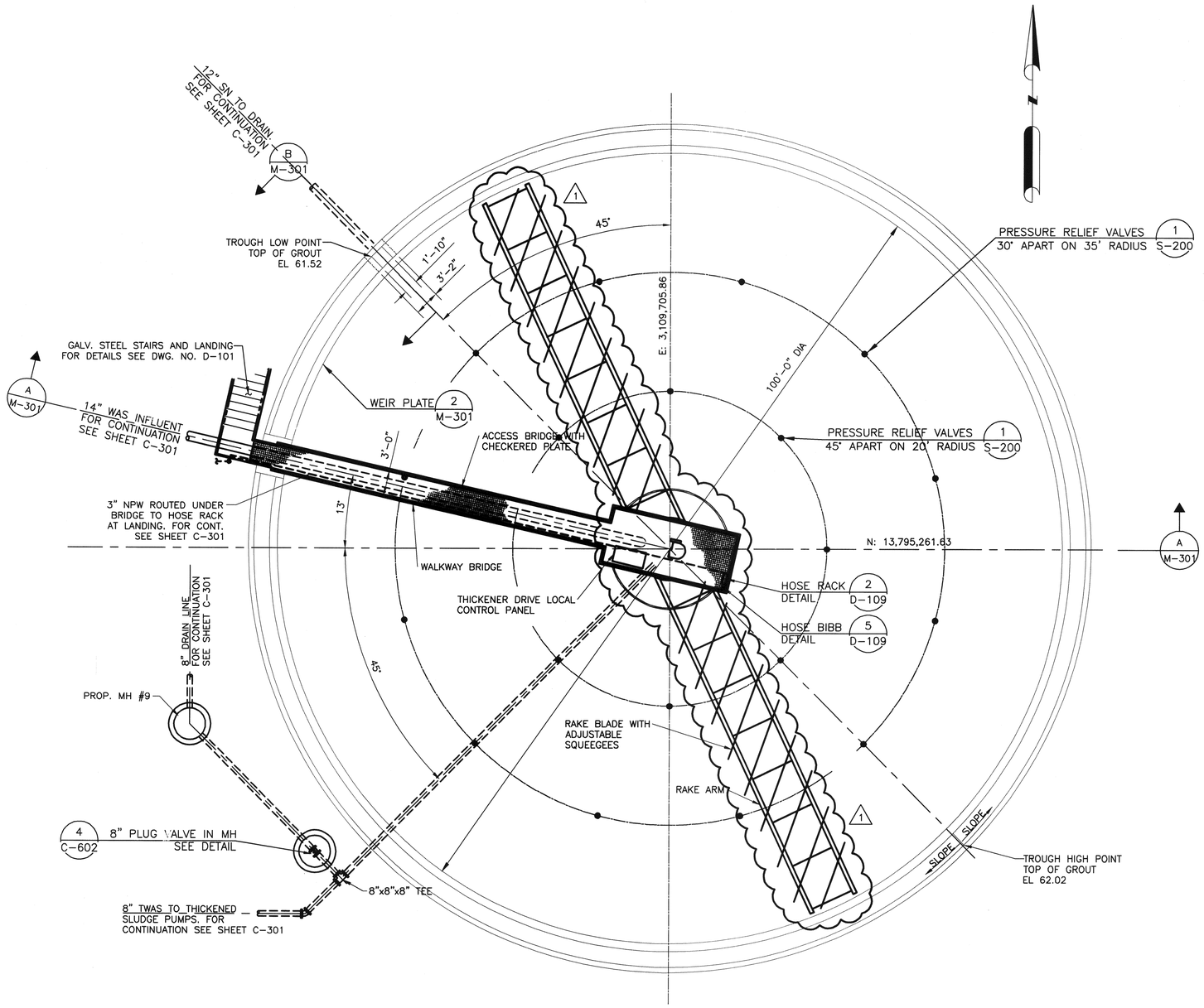

PLAN

SCALE: 1/8"=1'-0"

ORIGINAL SCALE IN INCHES FOR REDUCED PLANS

0 1 2 3

RECORD DRAWING

THE CONSTRUCTION CONTRACTOR RECORDED CHANGES MADE DURING CONSTRUCTION ON PRINTS OF THE CONTRACT DRAWINGS.

KLOTZ ASSOCIATES, INC. HAS CREATED THIS RECORD DRAWING BY POSTING THE INFORMATION SUBMITTED BY THE CONTRACTOR ON THE ORIGINALS OF THE CONTRACT DRAWINGS. ATTESTED BY:

SIGNATURE: _____

NAME: RALPH E. COX, P.E.

DATE: 12/02/11

No.	Date	Revisions	App.
1	DEC 2, 2011	RECORD DRAWINGS	REC

STATE OF TEXAS
RALPH E. COX
61028
REGISTERED PROFESSIONAL ENGINEER
2/11/08

klotz associates

Binkley & Barfield consulting engineers
1710 Seamist Drive
Houston, Texas 77008-3189
(713) 869-3433

SURVEYED BY: GEOSOLUTIONS | FIELD BOOK NO. : N/A

CITY OF HOUSTON
DEPARTMENT OF PUBLIC WORKS AND ENGINEERING

ALMEDA SIMS WWTP & SPF IMPROVEMENTS PACKAGE I

100-FT THICKENER MECHANICAL PLAN

FILE NO:	WW4903
WBS:	000298-0004-4
DRAWING SCALE	
AS SHOWN	
CITY OF HOUSTON PM	
IRAJ RANJBAR, P.E.	
DWG NO. :	M-300
SHEET NO.	55 OF 109

PUBLIC WORKS AND ENGINEERING
ACCEPTED & FILED
44488
CITY DRAWING NUMBER
HOUSTON, TEXAS

J:\0620.002.000\07.00 CADD\Package 1 (Addendum)\Mechanical\Prop MThickener Section.dwg Dec 02,2011 - 8:16ar

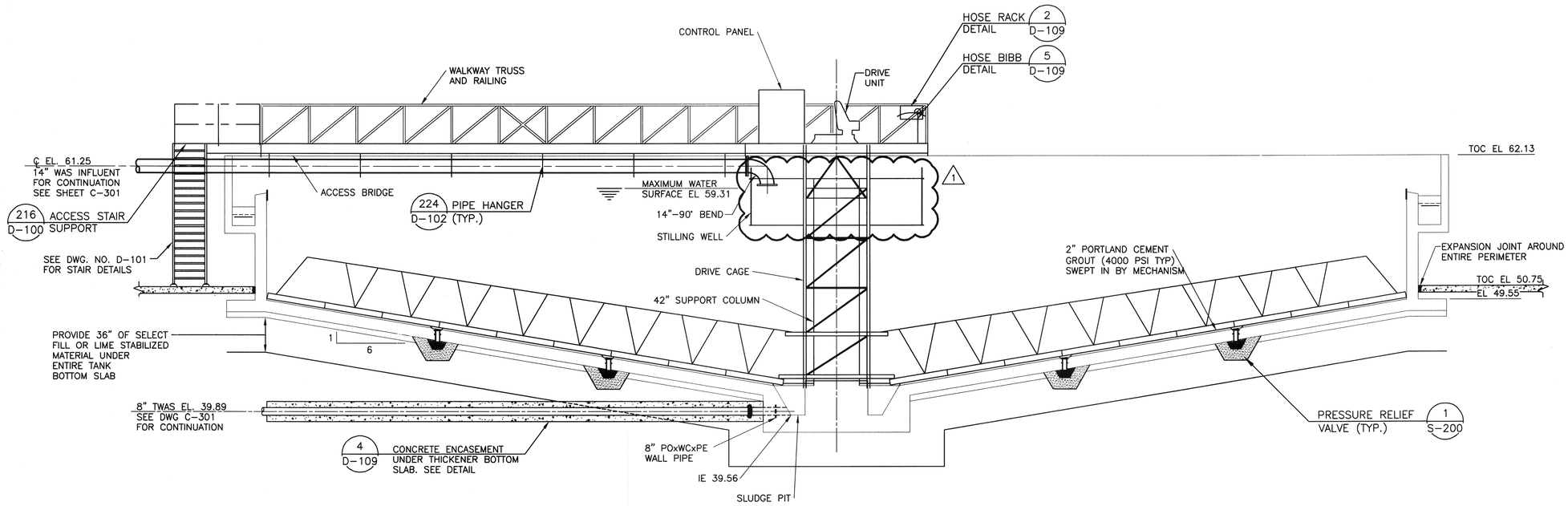

SECTION A
SCALE: 3/16"=1'-0"

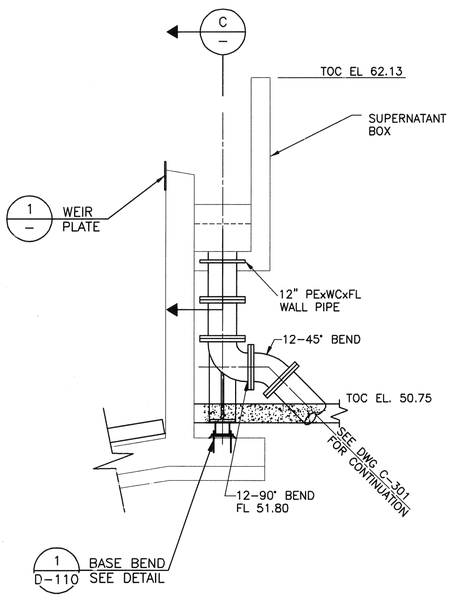

SECTION B
SCALE: 3/8" = 1'-0"

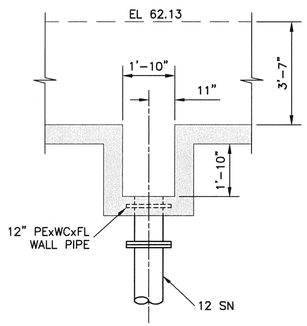

SECTION C
SCALE: 3/8" = 1'-0"

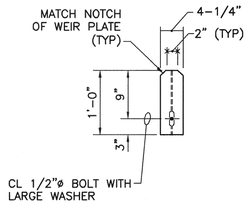

SPLICE PLATE

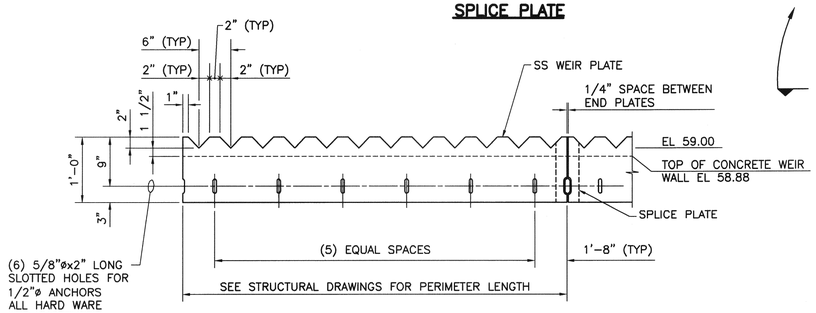

WEIR PLATE @ FULL PERIMETER

DETAIL 1
N.T.S.

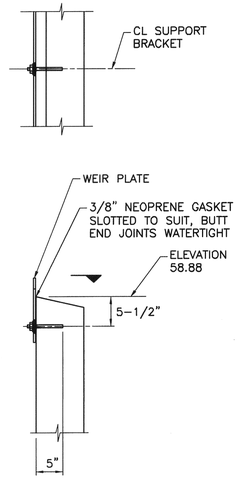

SECTION

RECORD DRAWING

THE CONSTRUCTION CONTRACTOR RECORDED CHANGES MADE DURING CONSTRUCTION ON PRINTS OF THE CONTRACT DRAWINGS.

KLOTZ ASSOCIATES, INC. HAS CREATED THIS RECORD DRAWING BY POSTING THE INFORMATION SUBMITTED BY THE CONTRACTOR ON THE ORIGINALS OF THE CONTRACT DRAWINGS. ATTESTED BY:

SIGNATURE: _____

NAME: RALPH E. COX, P.E.

DATE: 12/02/11

No.	Date	Revisions	App.
1	DEC 2, 2011	RECORD DRAWINGS	REC

STATE OF TEXAS
RALPH E. COX
61028
REGISTERED PROFESSIONAL ENGINEER
2/11/08

klotz associates

Binkley & Barfield consulting engineers
1710 Seamist Drive
Houston, Texas 77008-3189
(713) 869-3433

SURVEYED BY: GEOSOLUTIONS | FIELD BOOK NO. : N/A

CITY OF HOUSTON
DEPARTMENT OF PUBLIC WORKS AND ENGINEERING

ALMEDA SIMS WWTP & SPF IMPROVEMENTS PACKAGE I

100-FT THICKENER MECHANICAL SECTION & DETAILS

FILE NO:	WW4903
WBS:	000298-0004-4
DRAWING SCALE	AS SHOWN
CITY OF HOUSTON PM	IRAJ RANJBAR, P.E.
DWG NO. :	M-301
SHEET NO.	56 OF 109

PUBLIC WORKS AND ENGINEERING ACCEPTED & FILED 44488 CITY DRAWING NUMBER HOUSTON, TEXAS

COLOR TABLE:

ORIGINAL SCALE IN INCHES FOR REDUCED PLANS
0 1 2 3

J:\0620.002.000\07.00 CADD\Package 1 (Addendum)\Mechanical\Prop MTWAS pump Station.dwg Dec 02,2011 - 8:1

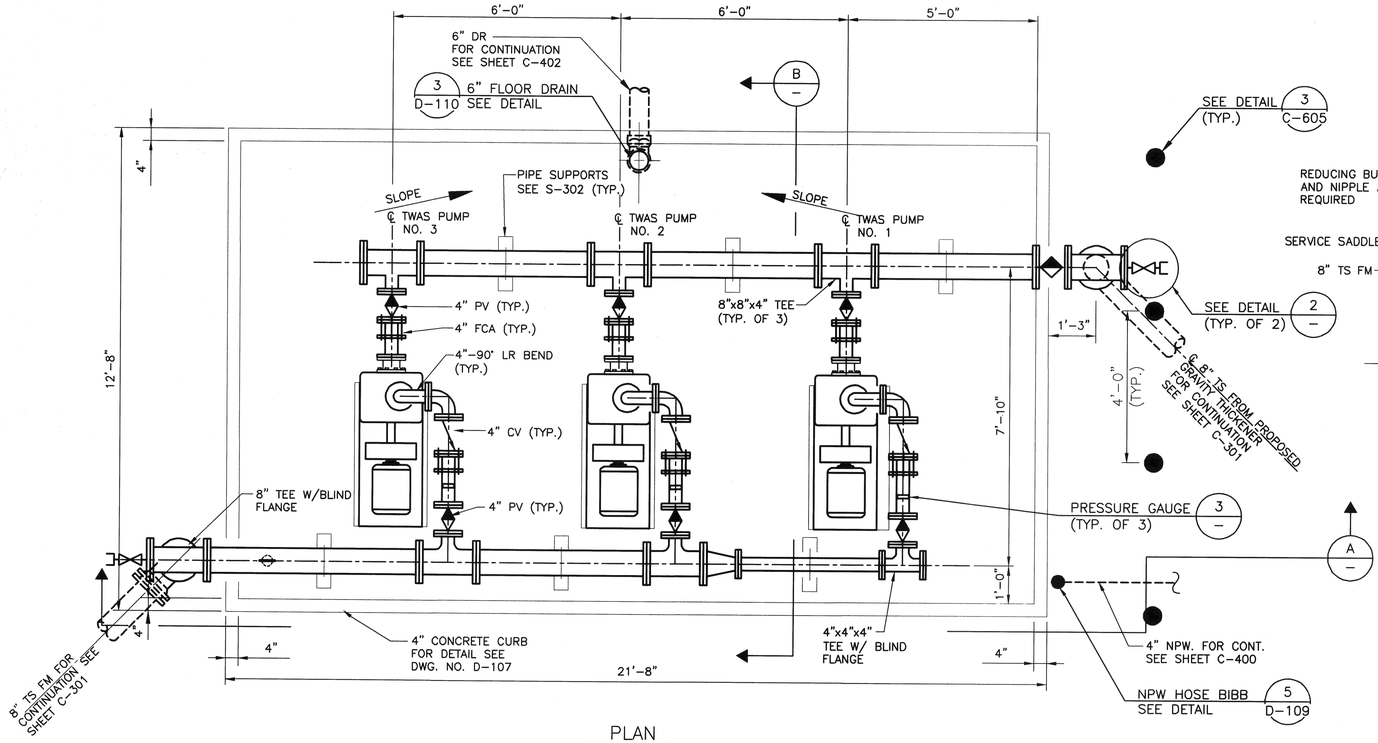

PLAN

SCALE: 1/2"=1'-0"

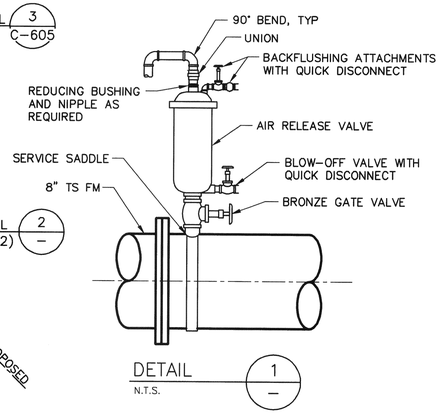

DETAIL 1 N.T.S.

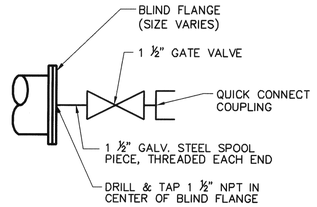

DETAIL 2 N.T.S.

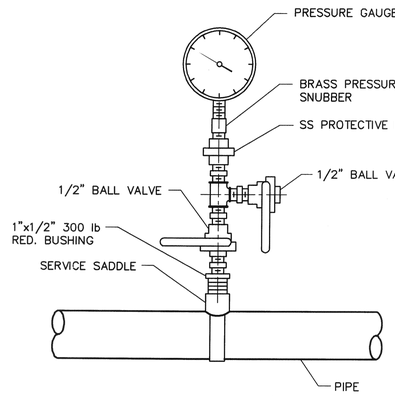

DETAIL 3 N.T.S.

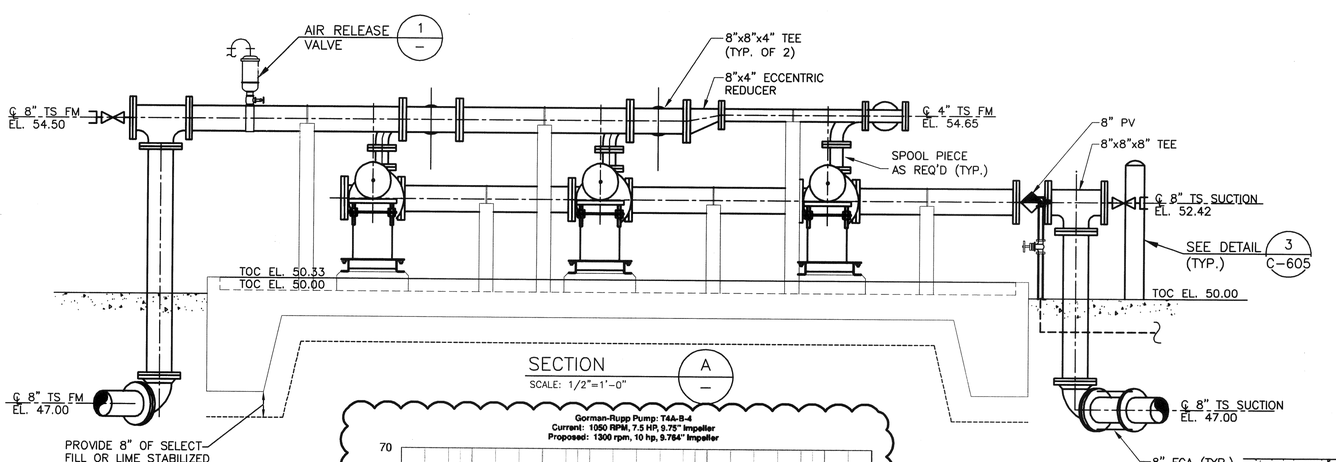

SECTION A

SCALE: 1/2"=1'-0"

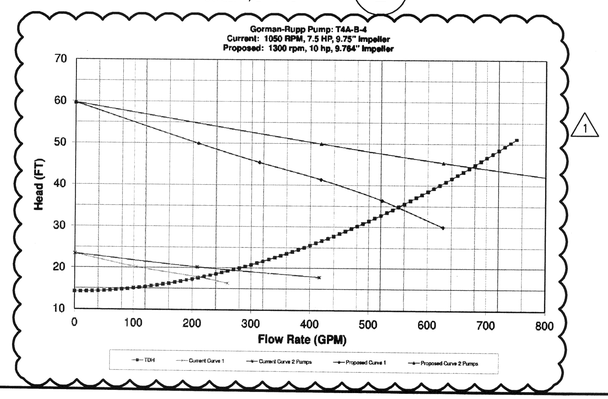

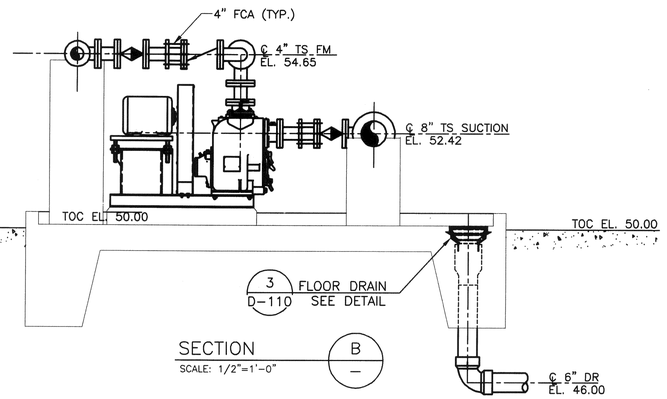

SECTION B

SCALE: 1/2"=1'-0"

RECORD DRAWING

THE CONSTRUCTION CONTRACTOR RECORDED CHANGES MADE DURING CONSTRUCTION ON PRINTS OF THE CONTRACT DRAWINGS.

KLOTZ ASSOCIATES, INC. HAS CREATED THIS RECORD DRAWING BY POSTING THE INFORMATION SUBMITTED BY THE CONTRACTOR ON THE ORIGINALS OF THE CONTRACT DRAWINGS. ATTESTED BY:

SIGNATURE:

NAME: RALPH E. COX, P.E.

DATE: 12/02/11

No.	Date	Revisions	App.
1	DEC 2, 2011	RECORD DRAWINGS	REC

STATE OF TEXAS
RALPH E. COX
61028
REGISTERED PROFESSIONAL ENGINEER
2/11/08

klotz associates

Binkley & Barfield consulting engineers
1710 Seamist Drive
Houston, Texas 77008-3189
(713) 869-3433

SURVEYED BY: GEOSOLUTIONS | FIELD BOOK NO. : N/A

CITY OF HOUSTON
DEPARTMENT OF PUBLIC WORKS AND ENGINEERING

ALMEDA SIMS WWTP & SPF IMPROVEMENTS PACKAGE I

THICKENED SLUDGE PUMP STATION MECHANICAL PLAN AND SECTIONS

FILE NO:	WW4903
WBS:	000298-0004-4
DRAWING SCALE	AS SHOWN
CITY OF HOUSTON PM	IRAJ RANJBAR, P.E.
DWG NO. :	M-400
SHEET NO.	57 OF 109

PUBLIC WORKS AND ENGINEERING
ACCEPTED & FILED
44488
CITY DRAWING NUMBER
HOUSTON, TEXAS

COLOR TABLE:

ORIGINAL SCALE IN INCHES FOR REDUCED PLANS
0 1 2 3

J:\0620.002.000\07.00 CADD\Package 1\Mechanical\Prop MTSHT Plan.dwg Feb 08,2008 - 10:24am lewiss

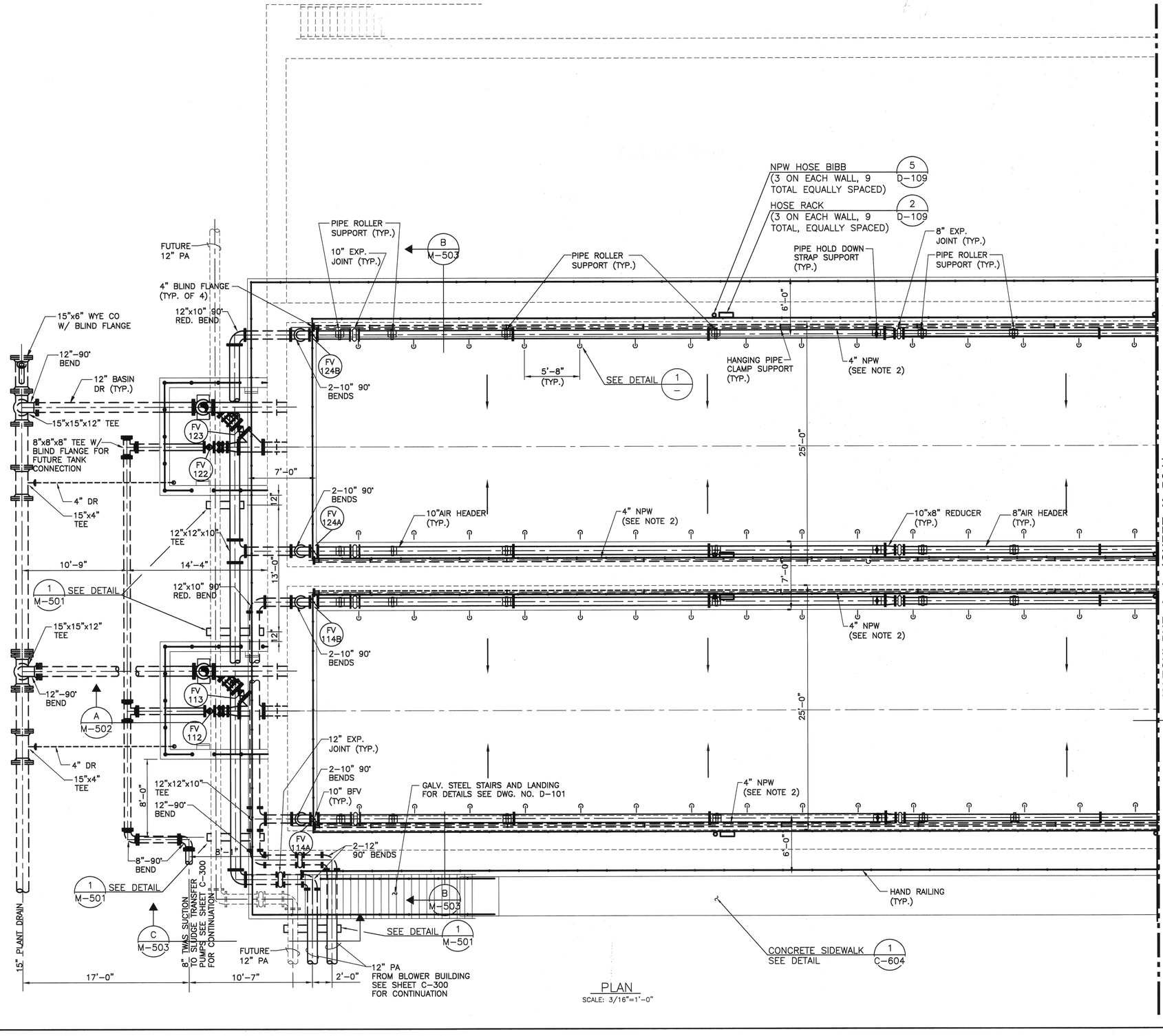

PLAN
SCALE: 3/16"=1'-0"

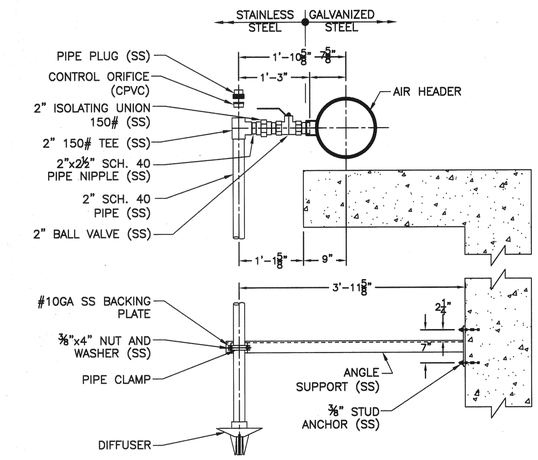

DETAIL 1
SCALE: 3/4"=1'-0"

NOTES:

1. ALL STAINLESS STEEL PIPE FITTINGS AND APPURTENANCES TO BE SUPPLIED BY DIFFUSER MANUFACTURER.
2. 4" NPW LINE (2 PER TANK) SHALL BE DRILLED AND TAPPED FOR 1" NPT CONNECTION SPACED AT 4'-6" INTERVALS FOR SPRAY NOZZLES. SEE DETAIL 1 M-503

No.	Date	Revisions	App.

STATE OF TEXAS
RALPH E. COX
61028
REGISTERED PROFESSIONAL ENGINEER
2/11/08

klotz associates

Binkley & Barfield consulting engineers
1710 Seamist Drive
Houston, Texas 77008-3189
(713) 869-3433

SURVEYED BY: GEOSOLUTIONS | FIELD BOOK NO. : N/A

CITY OF HOUSTON
DEPARTMENT OF PUBLIC WORKS AND ENGINEERING

ALMEDA SIMS WWTP & SPF IMPROVEMENTS PACKAGE I

SLUDGE HOLDING TANK MECHANICAL PLAN (SHEET 1)

RECORD DRAWING

THE CONSTRUCTION CONTRACTOR RECORDED CHANGES MADE DURING CONSTRUCTION ON PRINTS OF THE CONTRACT DRAWINGS.

KLOTZ ASSOCIATES, INC. HAS CREATED THIS RECORD DRAWING BY PUTTING THE INFORMATION SUBMITTED BY THE CONTRACTOR ON THE ORIGINALS OF THE CONTRACT DRAWINGS. ATTESTED BY:

SIGNATURE:
NAME: RALPH E. COX, P.E.
DATE: 12/02/11

FILE NO:	WW4903
WBS:	000298-0004-4
DRAWING SCALE	AS SHOWN
CITY OF HOUSTON PM	IRAJ RANJBAR, P.E.
DWG NO. :	M-500
SHEET NO.	58 OF 109

PUBLIC WORKS AND ENGINEERING
ACCEPTED & FILED
44488
CITY DRAWING NUMBER
HOUSTON, TEXAS

COLOR TABLE:

ORIGINAL SCALE IN INCHES FOR REDUCED PLANS
0 1 2 3

J:\0620.002.000\07.00 CAD\Package 1\Mechanical\Prop MTSHT Plan.dwg Feb 08,2008 - 10:25am lewiss

COLOR TABLE:

ORIGINAL SCALE IN INCHES
FOR REDUCED PLANS
0 1 2 3

MATCHLINE A-A (SHEET M-500)

FUTURE PAVE

8" TWAS. FOR CONT. SEE SHEET C-300

B —

3 D-110 6" FLOOR DRAIN (TYP. OF 2)

NPW HOSE BIBB (3 ON EACH WALL, 9 TOTAL EQUALLY SPACED) 5 D-109

HOSE RACK (3 ON EACH WALL, 9 TOTAL, EQUALLY SPACED) 2 D-109

6" EXP. JOINT (TYP.)

PIPE HOLD DOWN STRAP SUPPORT (TYP.)

PIPE ROLLER SUPPORT (TYP.)

6"x6"x4" TEE W/ BLIND FLANGE

4" GV (TYP.)

8" PLUG VALVE (TYP.)

6'-0"

4" NPW

5'-8" (TYP.)

SEE DETAIL 1 M-500

FV 125B

FV 121

8" TWAS

WALL PIPE SUPPORT (TYP.) 7 D-109

25'-0"

3'-1" 5'-11"

6"x6"x4" TEE

6"x6"x6" TEE

6"-90° BEND

8" AIR HEADER (TYP.)

8"x6" REDUCER (TYP.)

6" AIR HEADER (TYP.)

FV 125A

7'-0"

6"x6"x4" TEE

6" NPW FOR CONTINUATION SEE SHEET C-300

FV 115B

8" TWAS

FV 111

A M-502

A M-502

25'-0"

4" NPW

FV 115A

6'-0"

6"x4" RED. BEND

GALV. STEEL STAIRS AND LANDING FOR DETAILS SEE DWG. NO. D-101

HAND RAILING (TYP.)

CONCRETE SIDEWALK SEE DETAIL 1 C-604

PLAN
SCALE: 3/16"=1'-0"

28'-0" 28'-0"

8"-90° BEND

8" PLUG VALVE

8"x8" TEE

8"x8" TEE W/ BLIND FLANGE

8" MAG-METER

8"-45° BEND

℄ 8" TWAS EL. 51.16

N.G. EL. 46.44

℄ 8" TWAS EL. 44.71

6" PVC 90° BEND (TYP. OF 3)

℄ 6" DR EL. 41.95

6"x6" PVC TEE

8" PLUG VALVE

8"-90° BEND

SECTION B —
SCALE: 3/16"=1'-0"

SS U-BOLT, NUTS AND WASHERS (TYP.)

70" (3 PIPE SUPPORT)
46" (2 PIPE SUPPORT)

℄ 12"Ø AIR HEADER

C9x13.4

C9x13.4

AS REQUIRED

PARTIAL PENETRATION GROOVE WELD

1/4"

6"Ø HIGH STRENGTH STEEL PIPE

3'-0"

CLASS "B" CONCRETE

6" MIN

9" 9" 1'-6" DIA

NOTE:
ALL STEEL MATERIAL TO BE HOT-DIP GALVANIZED AFTER FABRICATION.

PIPE SUPPORT DETAIL 1 —
N.T.S.

RECORD DRAWING

THE CONSTRUCTION CONTRACTOR RECORDED CHANGES MADE DURING CONSTRUCTION ON PRINTS OF THE CONTRACT DRAWINGS.

KLOTZ ASSOCIATES, INC. HAS CREATED THIS RECORD DRAWING BY POSTING THE INFORMATION SUBMITTED BY THE CONTRACTOR ON THE ORIGINALS OF THE CONTRACT DRAWINGS. ATTESTED BY:

SIGNATURE:

NAME: RALPH E. COX, P.E.

DATE: 12/02/11

No.	Date	Revisions	App.

STATE OF TEXAS
RALPH E. COX
61028
REGISTERED
PROFESSIONAL ENGINEER
2/11/08

klotz associates

Binkley & Barfield
consulting engineers
1710 Seamist Drive
Houston, Texas 77008-3189
(713) 869-3433

SURVEYED BY: GEOSOLUTIONS | FIELD BOOK NO. : N/A

CITY OF HOUSTON
DEPARTMENT OF PUBLIC WORKS AND ENGINEERING

ALMEDA SIMS WWTP & SPF IMPROVEMENTS PACKAGE I

SLUDGE HOLDING TANK MECHANICAL PLAN (SHEET 2)

FILE NO:	WW4903
WBS:	000298-0004-4
DRAWING SCALE	AS SHOWN
CITY OF HOUSTON PM	IRAJ RANJBAR, P.E.
DWG NO. :	M-501
SHEET NO.	59 OF 109

PUBLIC WORKS AND ENGINEERING
ACCEPTED & FILED
444888
CITY DRAWING NUMBER
HOUSTON, TEXAS

J:\0620.002.000\07.00 CADD\Package 1\Mechanical\Prop MTSHT Sections.dwg Feb 11,2008 - 8:27am lewiss

NOTE:

1. ALL ABOVE GROUND NPW PIPING SHALL BE INSULATED STEEL PIPE.

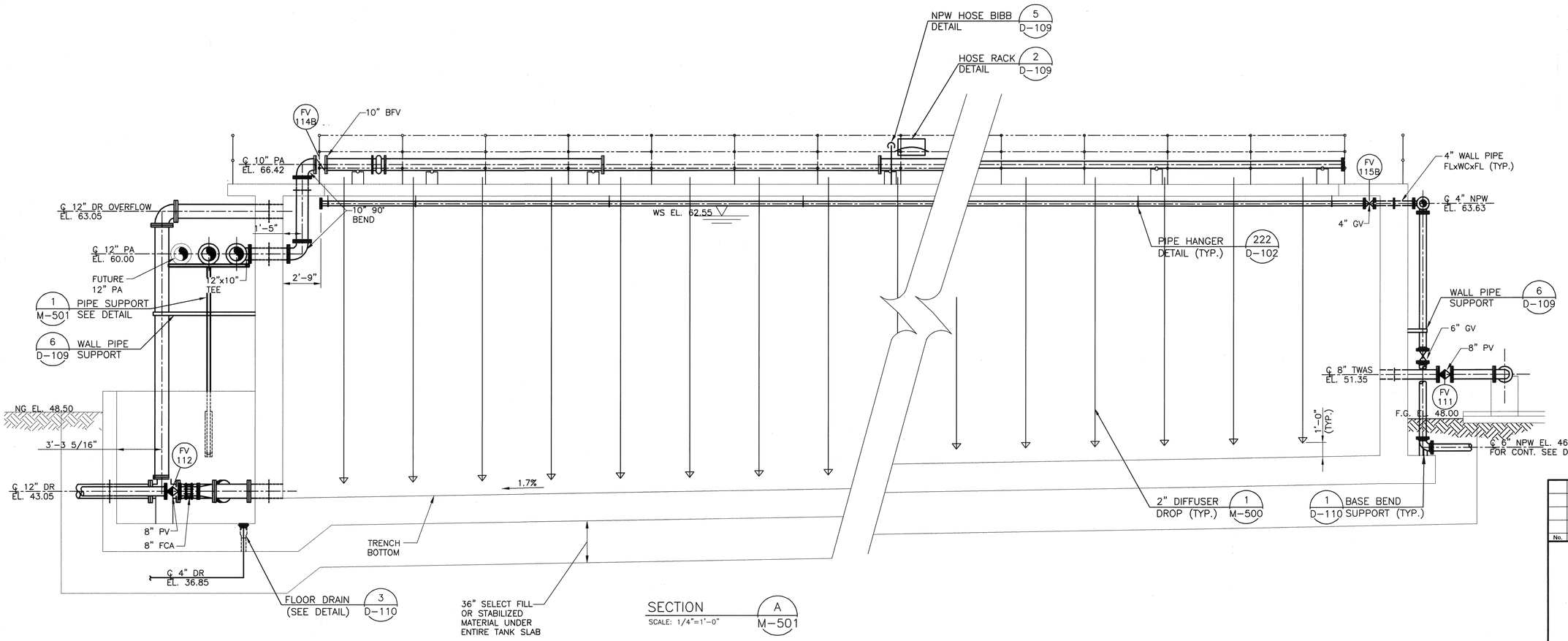

COLOR TABLE:

ORIGINAL SCALE IN INCHES FOR REDUCED PLANS

0 1 2 3

No.	Date	Revisions	App.

RECORD DRAWING

THE CONSTRUCTION CONTRACTOR RECORDED CHANGES MADE DURING CONSTRUCTION ON PRINTS OF THE CONTRACT DRAWINGS.

KLOTZ ASSOCIATES, INC. HAS CREATED THIS RECORD DRAWING BY POSTING THE INFORMATION SUBMITTED BY THE CONTRACTOR ON THE ORIGINALS OF THE CONTRACT DRAWINGS. ATTESTED BY:

SIGNATURE:

NAME: RALPH E. COX, P.E.

DATE: 12/02/11

STATE OF TEXAS
RALPH E. COX
61026
REGISTERED PROFESSIONAL ENGINEER
2/11/08

klotz associates

Binkley & Barfield
consulting engineers
1710 Seamist Drive
Houston, Texas 77008-3189
(713) 869-3433

SURVEYED BY: GEOSOLUTIONS | FIELD BOOK NO. : N/A

CITY OF HOUSTON
DEPARTMENT OF PUBLIC WORKS AND ENGINEERING

ALMEDA SIMS WWTP & SPF IMPROVEMENTS PACKAGE I

SLUDGE HOLDING TANK MECHANICAL SECTION (SHEET 1)

FILE NO:	WW4903
WBS:	000298-0004-4
DRAWING SCALE	AS SHOWN
CITY OF HOUSTON PM	IRAJ RANJBAR, P.E.
DWG NO. :	M-502
SHEET NO.	60 OF 109

PUBLIC WORKS AND ENGINEERING
ACCEPTED & FILED
41488
CITY DRAWING NUMBER
HOUSTON, TEXAS

J:\0620.002.000\07.00 CADD\Package 1\Mechanical\Prop MTSHT Section2.dwg Feb 08,2008 - 10:25am lewiss

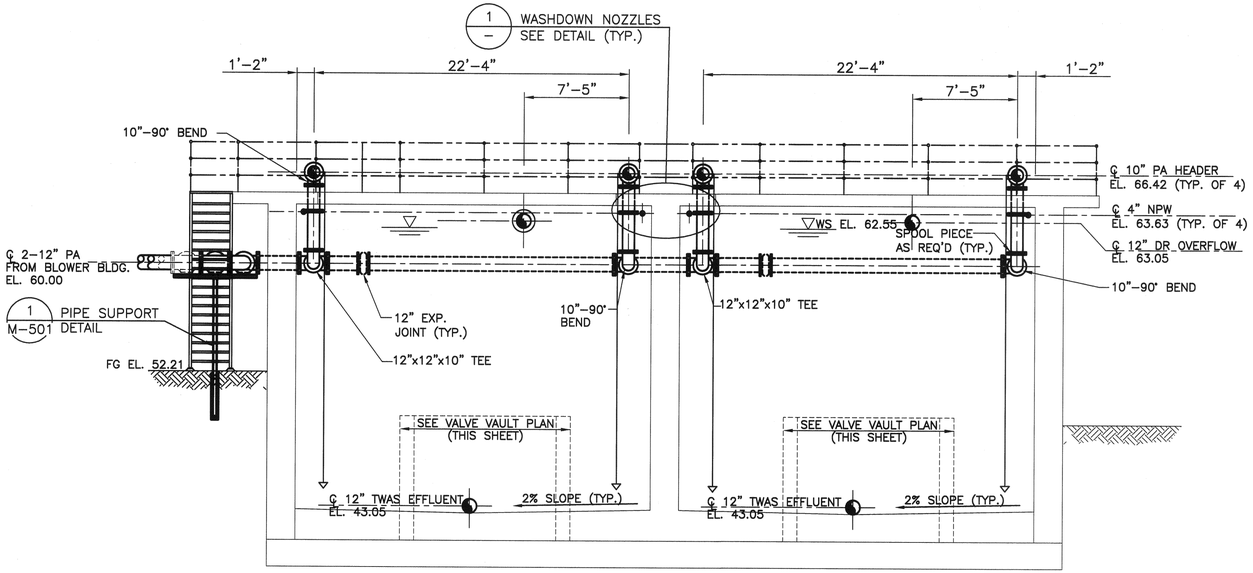

SECTION B
SCALE: 3/16"=1'-0"

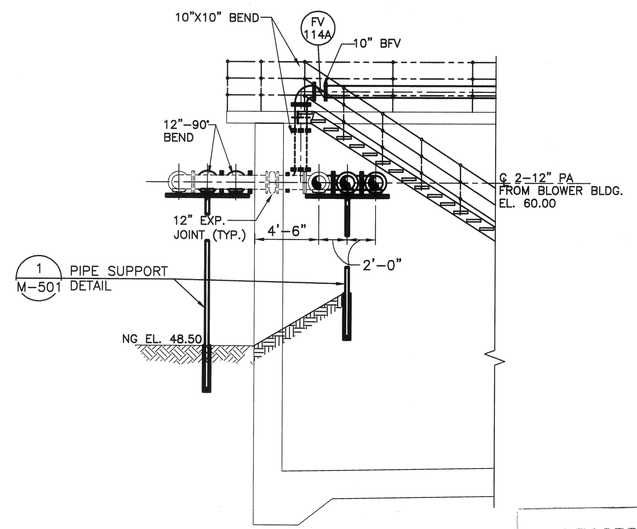

SECTION C
SCALE: 3/16"=1'-0"

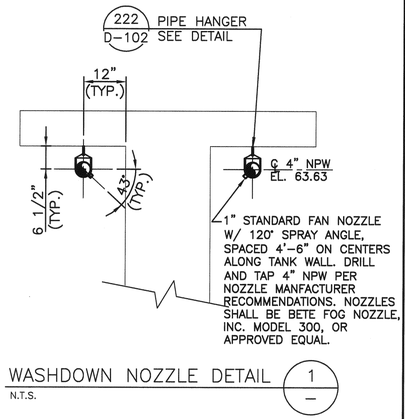

WASHDOWN NOZZLE DETAIL 1 — N.T.S.

RECORD DRAWING

THE CONSTRUCTION CONTRACTOR RECORDED CHANGES MADE DURING CONSTRUCTION ON PRINTS OF THE CONTRACT DRAWINGS.

KLOTZ ASSOCIATES, INC. HAS CREATED THIS RECORD DRAWING BY PLOTTING THE INFORMATION SUBMITTED BY THE CONTRACTOR ON THE ORIGINALS OF THE CONTRACT DRAWINGS. ATTESTED BY:

SIGNATURE: Ralph E. Cox
NAME: RALPH E. COX, P.E.
DATE: 12/02/11

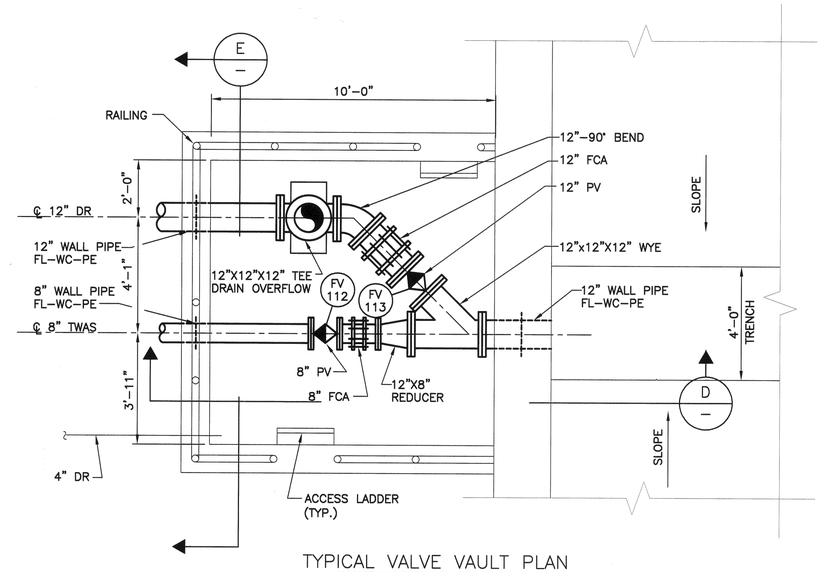

TYPICAL VALVE VAULT PLAN
SCALE: 3/8"=1'-0"

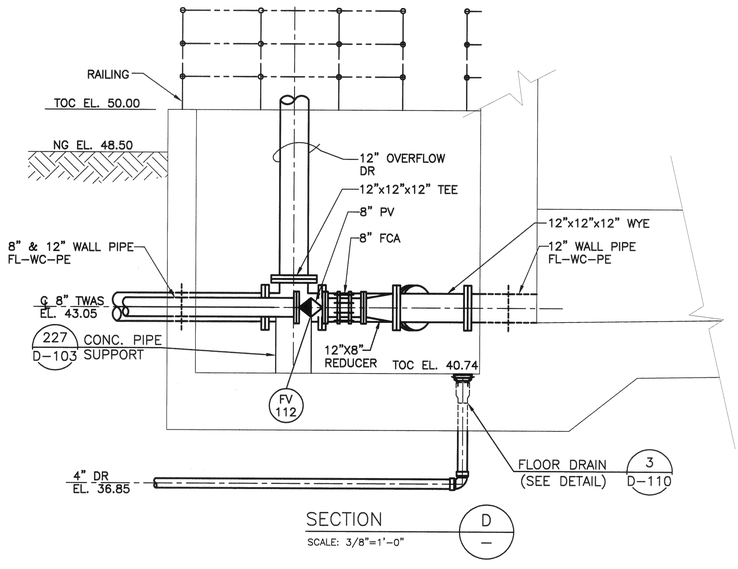

SECTION D
SCALE: 3/8"=1'-0"

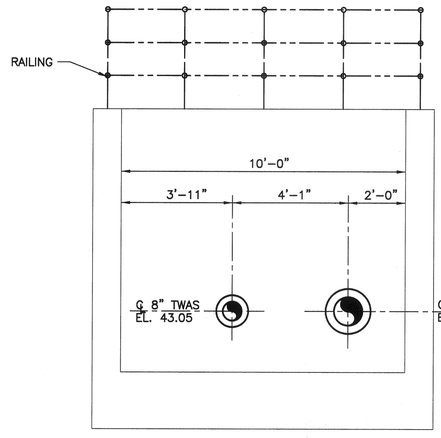

SECTION E
SCALE: 3/8"=1'-0"

No.	Date	Revisions	App.

STATE OF TEXAS — RALPH E. COX — 61026 — REGISTERED PROFESSIONAL ENGINEER
2/11/08

klotz associates

Binkley & Barfield consulting engineers
1710 Seamist Drive
Houston, Texas 77008-3189
(713) 869-3433

SURVEYED BY: GEOSOLUTIONS | FIELD BOOK NO. : N/A

CITY OF HOUSTON
DEPARTMENT OF PUBLIC WORKS AND ENGINEERING

ALMEDA SIMS WWTP & SPF IMPROVEMENTS PACKAGE I

SLUDGE HOLDING TANK MECHANICAL SECTIONS (SHEET 2)

FILE NO:	WW4903
WBS:	000298-0004-4
DRAWING SCALE	AS SHOWN
CITY OF HOUSTON PM	IRAJ RANJBAR, P.E.
DWG NO. :	M-503
SHEET NO.	61 OF 109

PUBLIC WORKS AND ENGINEERING — ACCEPTED & FILED — 44485 — CITY DRAWING NUMBER — HOUSTON, TEXAS

COLOR TABLE:
ORIGINAL SCALE IN INCHES FOR REDUCED PLANS
0 1 2 3

J:\0620.002.000\07.00 CADD\Package 1 (Addendum)\Mechanical\Prop MST pump Station.dwg Dec 02,2011 - 8:18am

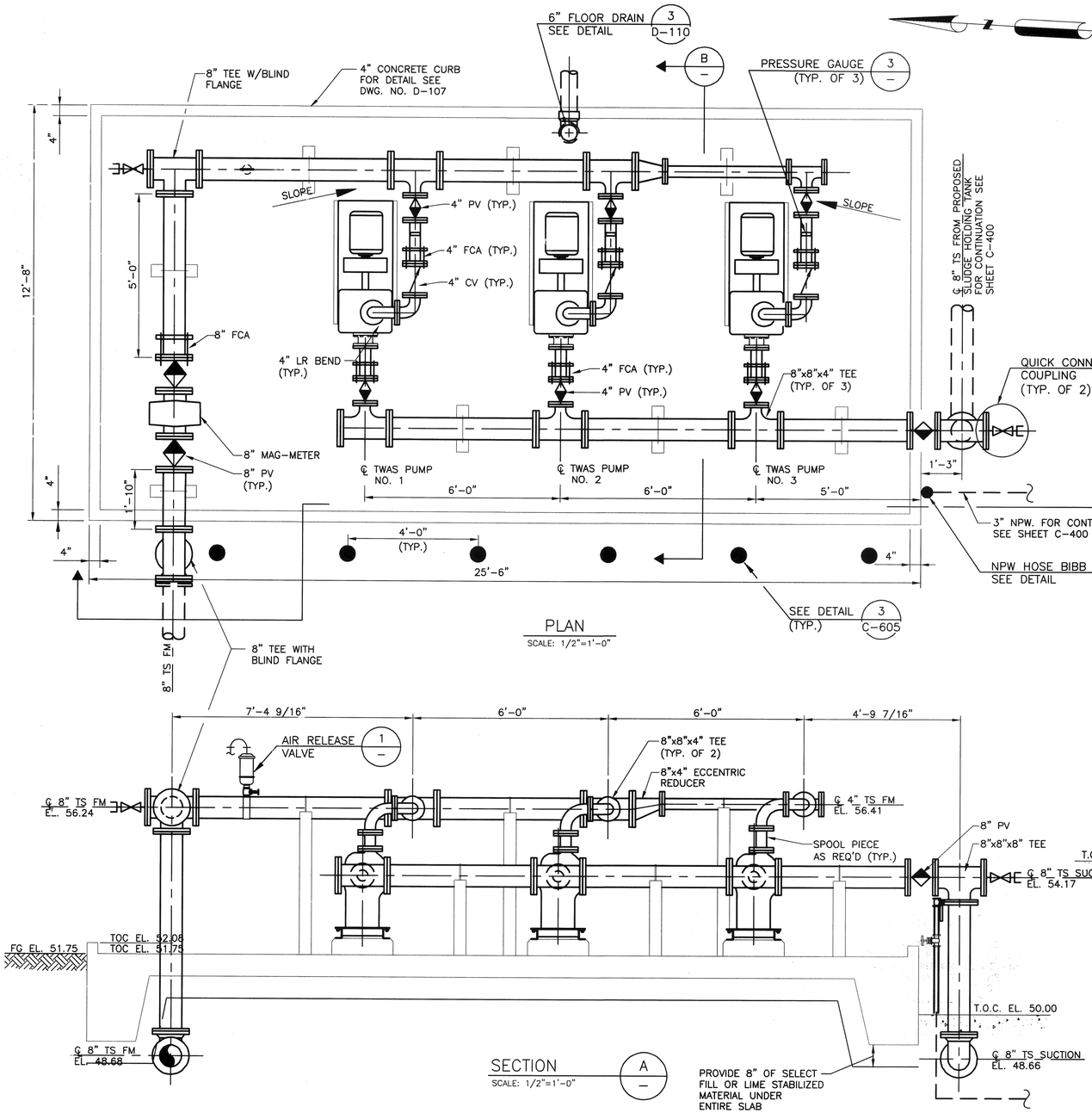

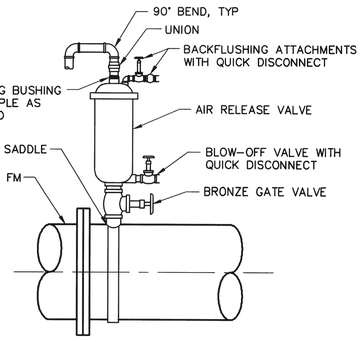

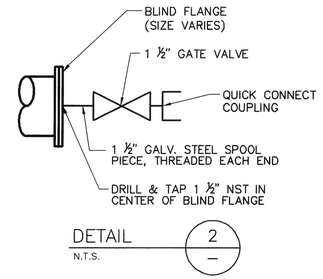

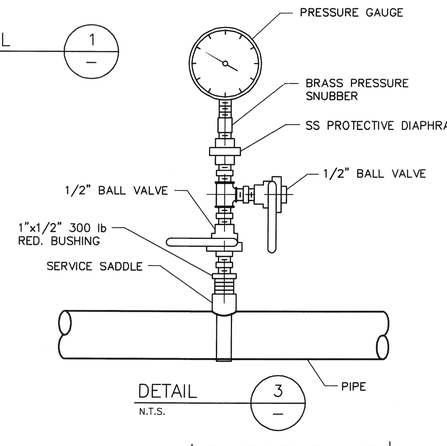

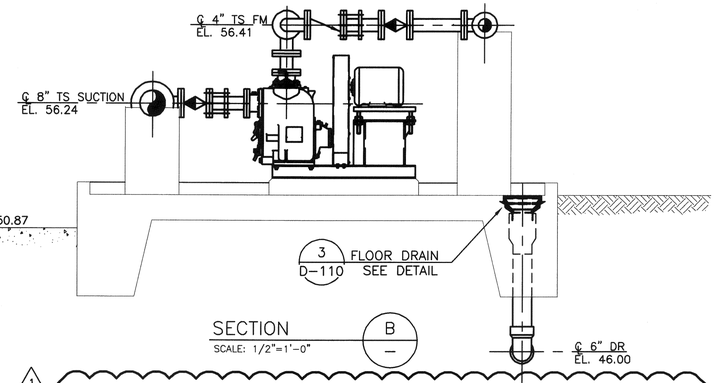

1

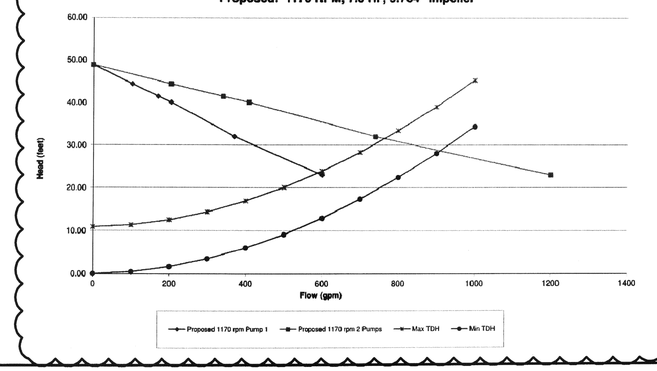

RECORD DRAWING

THE CONSTRUCTION CONTRACTOR RECORDED CHANGES MADE DURING CONSTRUCTION ON PRINTS OF THE CONTRACT DRAWINGS.

KLOTZ ASSOCIATES, INC. HAS CREATED THIS RECORD DRAWING BY POSTING THE INFORMATION SUBMITTED BY THE CONTRACTOR ON THE ORIGINALS OF THE CONTRACT DRAWINGS. ATTESTED BY:

SIGNATURE:

NAME: RALPH E. COX, P.E.

DATE: 12/02/11

No.	Date	Revisions	App.
1	DEC 2, 2011	RECORD DRAWINGS	REC

STATE OF TEXAS
RALPH E. COX
61028
REGISTERED PROFESSIONAL ENGINEER
2/11/08

klotz associates

Binkley & Barfield
consulting engineers
1710 Seamist Drive
Houston, Texas 77008-3189
(713) 869-3433

SURVEYED BY: GEOSOLUTIONS | FIELD BOOK NO. : N/A

CITY OF HOUSTON
DEPARTMENT OF PUBLIC WORKS AND ENGINEERING

ALMEDA SIMS WWTP & SPF IMPROVEMENTS PACKAGE I

SLUDGE TRANSFER PUMP STATION MECHANICAL PLAN AND SECTIONS

FILE NO:	WW4903
WBS:	000298-0004-4
DRAWING SCALE	AS SHOWN
CITY OF HOUSTON PM	IRAJ RANJBAR, P.E.
DWG NO. :	M-600
SHEET NO.	62 OF 109

PUBLIC WORKS AND ENGINEERING
ACCEPTED & FILED
44488
CITY DRAWING NUMBER
HOUSTON, TEXAS

COLOR TABLE:

ORIGINAL SCALE IN INCHES FOR REDUCED PLANS
0 1 2 3

J:\0620.002.000\07.00 CADD\Package 1\Mechanical\Prop MBB Layout.dwg Feb 11,2008 - 10:06am lewiss

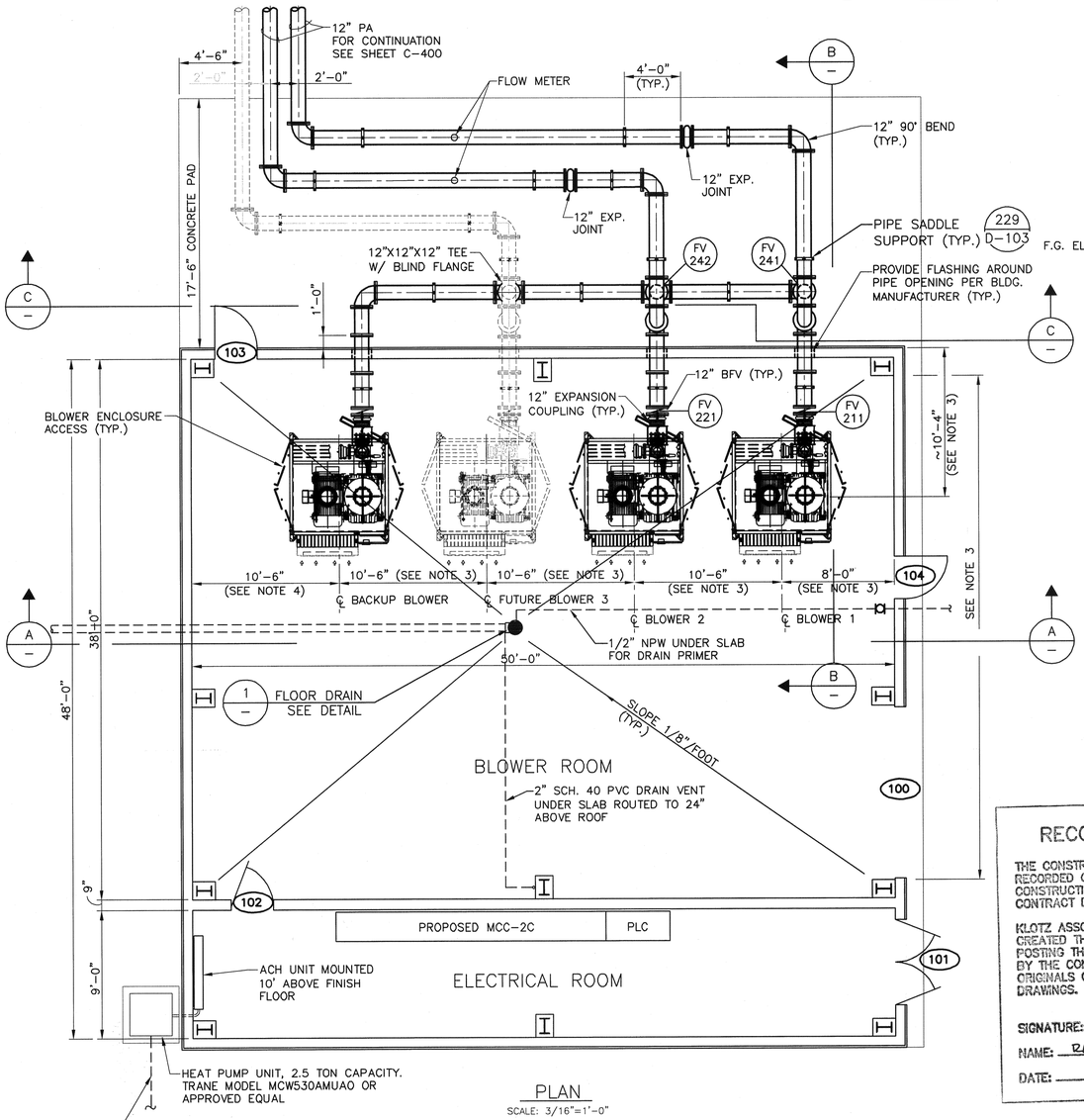

PLAN

SCALE: 3/16"=1'-0"

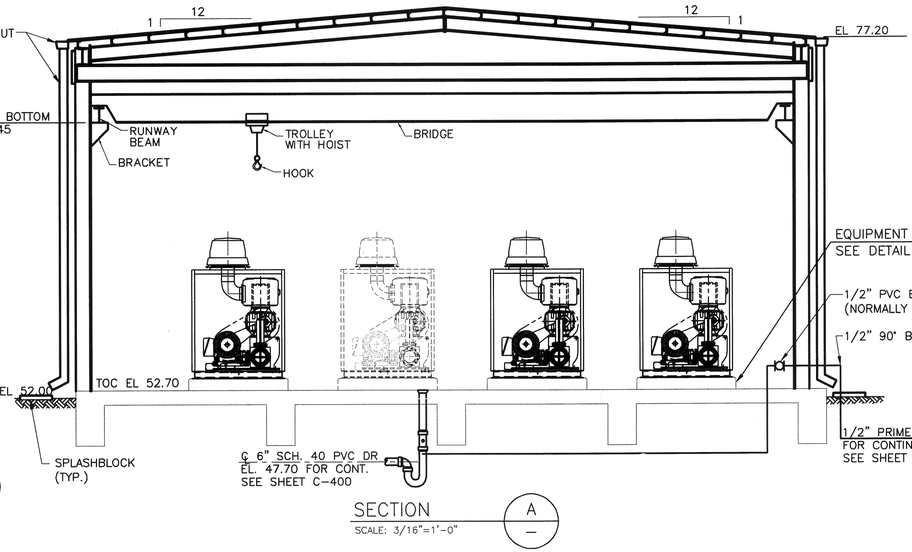

SECTION

SCALE: 3/16"=1'-0"

A

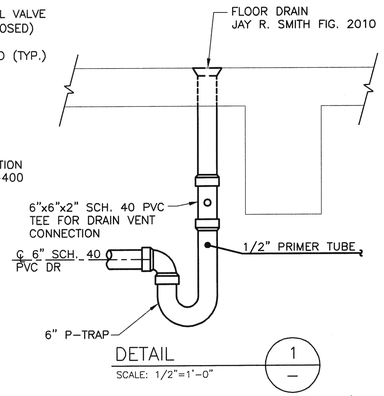

DETAIL

SCALE: 1/2"=1'-0"

1

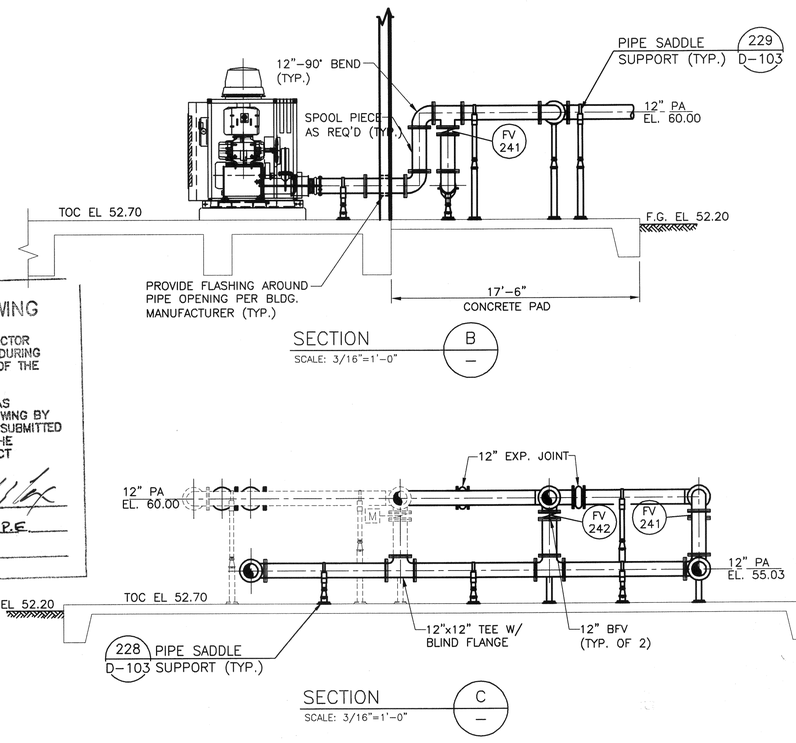

SECTION

SCALE: 3/16"=1'-0"

B

SECTION

SCALE: 3/16"=1'-0"

C

DOOR SCHEDULE
(SEE SPECIFICATION 13120 FOR ADDITIONAL DETAILS)

MARK	DOOR SIZE	TYPE	MATERIAL	HARDWARE SET	COMMENTS
100	12'-0" X 16'-0" X 2½"	OVERHEAD	GALV. STEEL	PER DOOR MFG	SEE SPECIFICATION
101	6'-0" X 9'-0" X 1¾"	HOLLOW METAL	STAINLESS STEEL	NOTE 1	DOUBLE DOOR
102	3'-0" X 7'-0" X 1¾"	HOLLOW METAL	STAINLESS STEEL	NOTE 2	SINGLE DOOR
103	3'-0" X 7'-0" X 1¾"	HOLLOW METAL	STAINLESS STEEL	NOTE 3	SINGLE DOOR
104	3'-0" X 7'-0" X 1¾"	HOLLOW METAL	STAINLESS STEEL	NOTE 3	SINGLE DOOR

NOTES:

1. 3 EA HINGES, LEVER LOCKSET, THRESHOLD, DRIP CAP, DOOR CLOSER, ASTRAGAL, DOOR STOP, PANIC BARS
2. 3 HINGES, LEVER LOCKSET, THRESHOLD, DOOR CLOSER
3. 3 HINGES, LEVER LOCKSET, THRESHOLD, DRIP CAP, DOOR CLOSER, PANIC BAR

NOTES:

1. ALL BLOWER DISCHARGE PIPING LESS THAN 7'-0" ABOVE FINISHED FLOOR SHALL BE INSULATED. SEE SPECIFICATIONS FOR DETAILS.
2. APPROXIMATE RUNWAY LENGTH FOR BRIDGE CRANE TO BE 46.0 FEET. ACTUAL DIMENSION TO BE DETERMINED IN PRE-ENGINEERED BUILDING SUBMITTAL APPROVALS.
3. DIMENSION SHOWN IS APPROXIMATE. ACTUAL DIMENSION WILL DEPEND ON EQUIPMENT FURNISHED.

RECORD DRAWING

THE CONSTRUCTION CONTRACTOR RECORDED CHANGES MADE DURING CONSTRUCTION ON PRINTS OF THE CONTRACT DRAWINGS.

KLOTZ ASSOCIATES, INC. HAS CREATED THIS RECORD DRAWING BY POSTING THE INFORMATION SUBMITTED BY THE CONTRACTOR ON THE ORIGINALS OF THE CONTRACT DRAWINGS. ATTESTED BY:

SIGNATURE:

NAME: RALPH E. COX, P.E.

DATE: 12-02-11

No.	Date	Revisions	App.

STATE OF TEXAS
RALPH E. COX
61026
REGISTERED
PROFESSIONAL ENGINEER
2/11/08

klotz associates

Binkley & Barfield
consulting engineers
1710 Seamist Drive
Houston, Texas 77008-3189
(713) 869-3433

SURVEYED BY: GEOSOLUTIONS | FIELD BOOK NO. : N/A

CITY OF HOUSTON
DEPARTMENT OF PUBLIC WORKS AND ENGINEERING

ALMEDA SIMS WWTP & SPF IMPROVEMENTS PACKAGE I

BLOWER BUILDING LAYOUT

FILE NO:	WW4903
WBS:	000298-0004-4
DRAWING SCALE	AS SHOWN
CITY OF HOUSTON PM	IRAJ RANJBAR, P.E.
DWG NO. :	M-700
SHEET NO.	63 OF 109

PUBLIC WORKS AND ENGINEERING
ACCEPTED & FILED
44188
CITY DRAWING NUMBER
HOUSTON, TEXAS

COLOR TABLE:

ORIGINAL SCALE IN INCHES FOR REDUCED PLANS
0 1 2 3

J:\0620.002.000\07.00 CADD\Package 1\Mechanical\Prop MBB ELEVS.dwg Feb 11,2008 - 10:10am lewiss

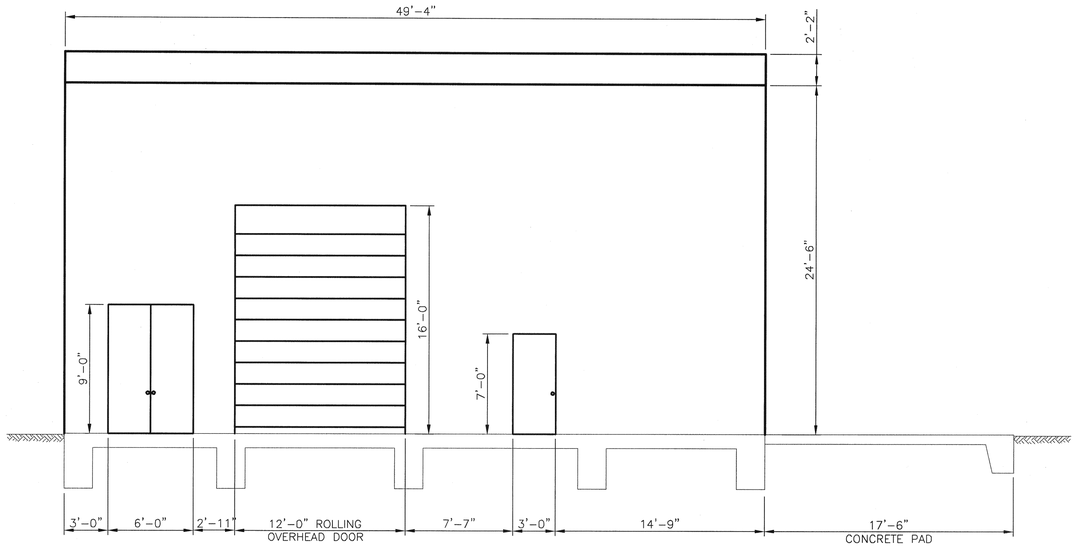

SOUTH ELEVATION
SCALE: 3/16"=1'-0"

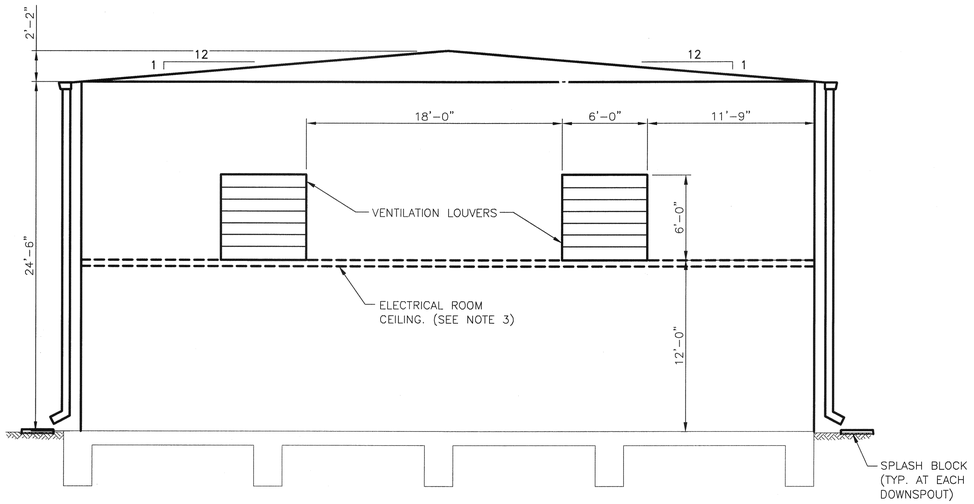

WEST ELEVATION
SCALE: 3/16"=1'-0"

NOTES:

1. STANDARD LIVE ROOF LOAD: 20 PSF.
2. STANDARD WIND LOAD: 130 MPH (3 SECOND GUST)
3. DESIGN ELECTRICAL ROOM ROOF FOR 150 PSF LIVE LOAD.

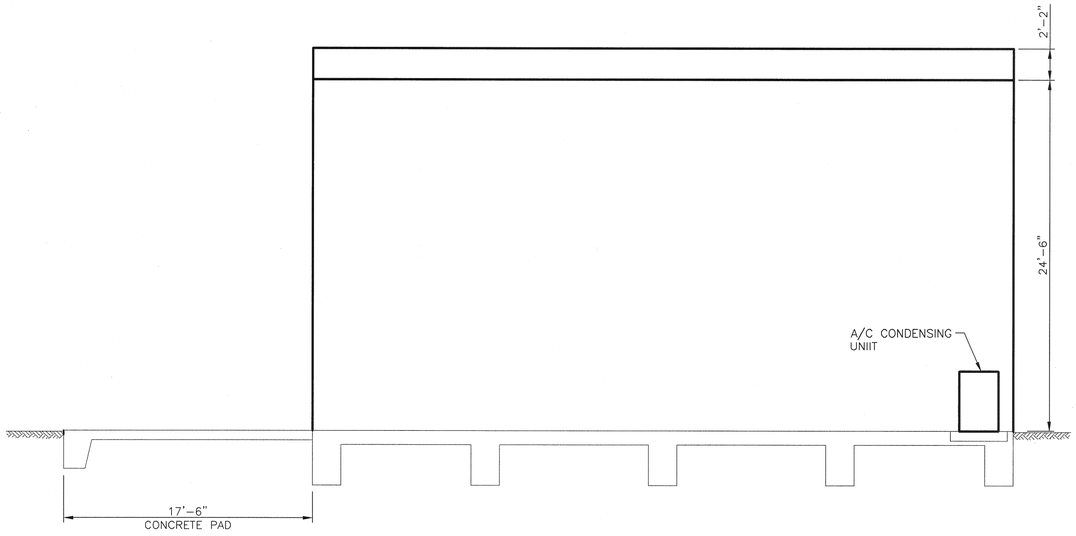

NORTH ELEVATION
SCALE: 3/16"=1'-0"

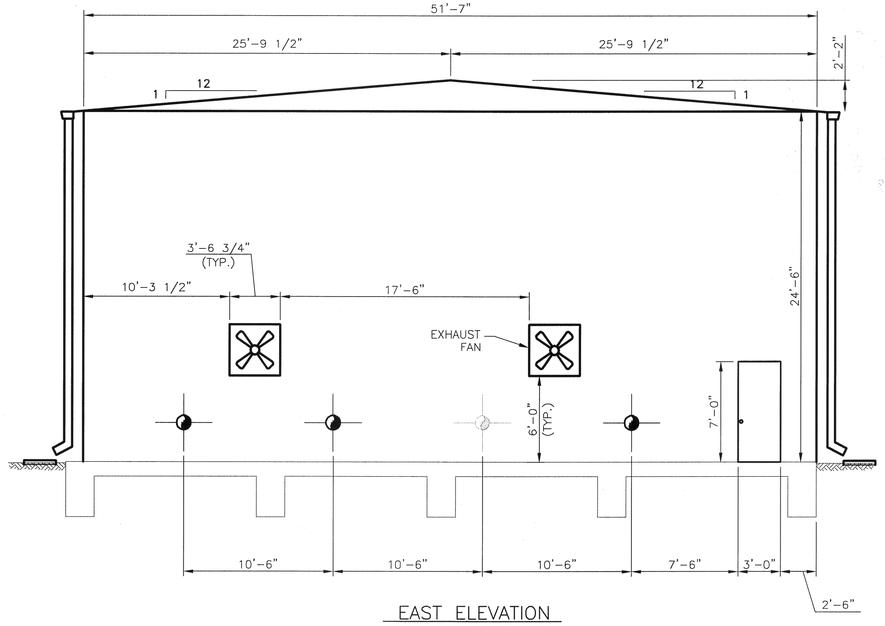

EAST ELEVATION
SCALE: 3/16"=1'-0"

COLOR TABLE:

ORIGINAL SCALE IN INCHES FOR REDUCED PLANS
0 1 2 3

NEW LOUVER SCHEDULE

MARK	DESCRIPTION	MANUFACTURER	MODEL NO	DEPTH	DIMENSIONS
L-1	EXTRUDED ALUMINUM DRAINABLE BALDE LOUVER	MESTEK (AMW)	LE-23	4"	6' X 6'
L-2	EXTRUDED ALUMINUM DRAINABLE BALDE LOUVER	MESTEK (AMW)	LE-24	4"	6' X 6'

NEW FAN SCHEDULE

MARK	DESCRIPTION	MANUFACTURER	MODEL NO.	MOTOR HP	CFM	STATIC PRESS " W.C.	WHEEL DIA (IN)	RPM	POWER	MOTOR TYPE
EF-1	WALL PROP FAN DIRECT FAN	HARTZELL	A02SG-364A171STFCI4	1-½	12,176	0.25	36	1160	460/3/60	TEFC
EF-2	WALL PROP FAN DIRECT FAN	HARTZELL	A02SG-364A171STFCI4	1-½	12,176	0.25	36	1160	460/3/60	TEFC

HVAC SCHEDULE

MARK	DESCRIPTION	MANUFACTURER	MODEL NO.	MOTOR HP	FAN DIAMETER	RPM	POWER
HVAC -1	DUCTLESS EVAPORATORS	TRANE	MCW530AMUA0	0.062	(-)	1070	220-240/1/60
HVAC -2	SPLIT SYSTEM AIR CONIDITIONING UNIT	TRANE	2TTB0030A100A	0.125	23	825	200-230/1/60

RECORD DRAWING

THE CONSTRUCTION CONTRACTOR RECORDED CHANGES MADE DURING CONSTRUCTION ON PRINTS OF THE CONTRACT DRAWINGS.

KLOTZ ASSOCIATES, INC. HAS CREATED THIS RECORD DRAWING BY POSTING THE INFORMATION SUBMITTED BY THE CONTRACTOR ON THE ORIGINALS OF THE CONTRACT DRAWINGS. ATTESTED BY:

SIGNATURE:
NAME: RALPH E. COX, P.E.
DATE: 12/02/11

No.	Date	Revisions	App.

STATE OF TEXAS
RALPH E. COX
61026
REGISTERED PROFESSIONAL ENGINEER
2/11/08

klotz associates

Binkley & Barfield
consulting engineers
1710 Seamist Drive
Houston, Texas 77008-3189
(713) 869-3433

SURVEYED BY: GEOSOLUTIONS | FIELD BOOK NO. : N/A

CITY OF HOUSTON
DEPARTMENT OF PUBLIC WORKS AND ENGINEERING

ALMEDA SIMS WWTP & SPF IMPROVEMENTS PACKAGE I

BLOWER BUILDING ELEVATIONS

FILE NO:	WW4903
WBS:	000298-0004-4
DRAWING SCALE	AS SHOWN
CITY OF HOUSTON PM	IRAJ RANJBAR, P.E.
DWG NO. :	M-701
SHEET NO.	64 OF 109

PUBLIC WORKS AND ENGINEERING ACCEPTED & FILED
4488
CITY DRAWING NUMBER
HOUSTON, TEXAS

G:\115800 Almeda\CADD_S-100 Exist Screen Facility Mod.dwg Feb 11,2008 - 3:40pm mjd

COLOR TABLE:

ORIGINAL SCALE IN INCHES
FOR REDUCED PLANS
0 1 2 3

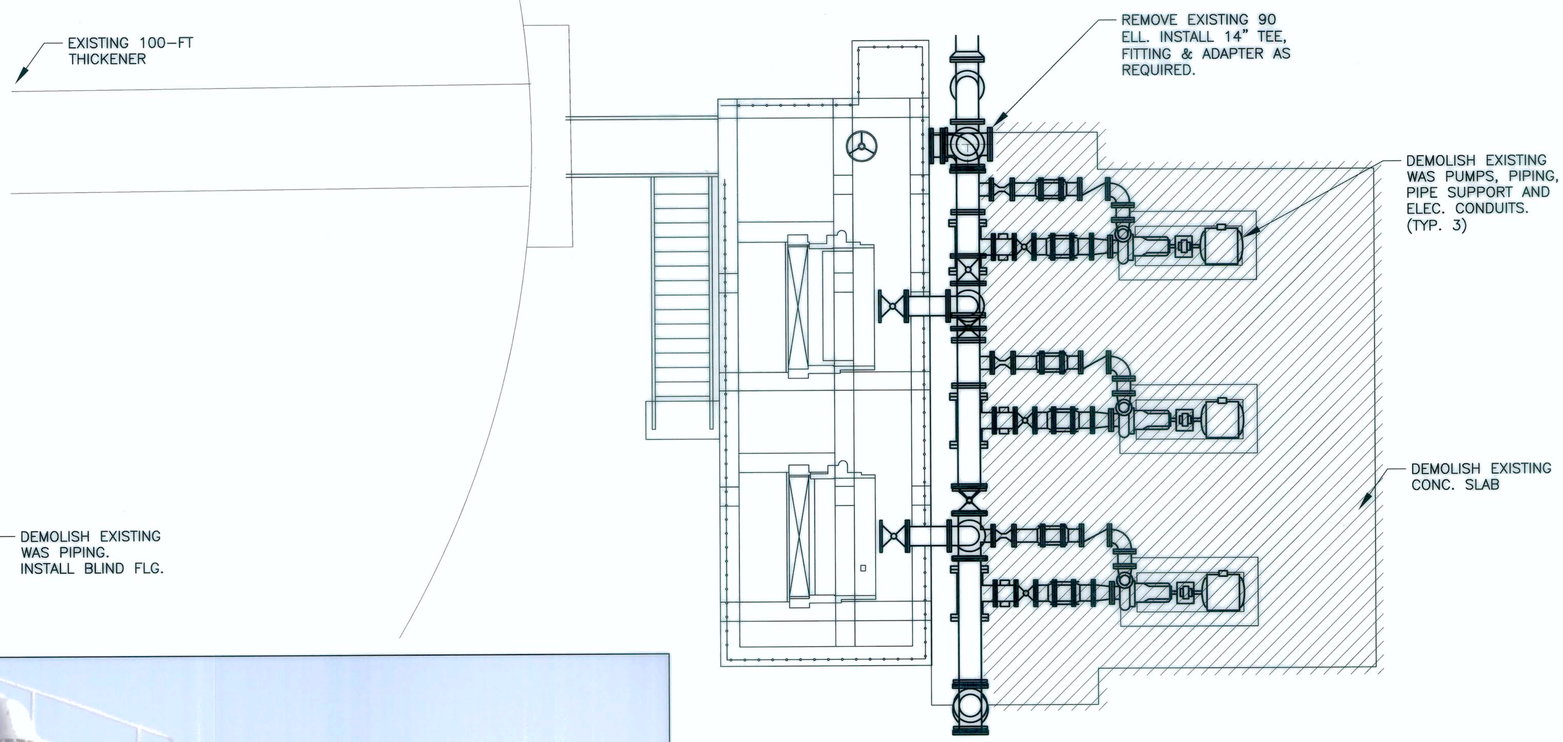

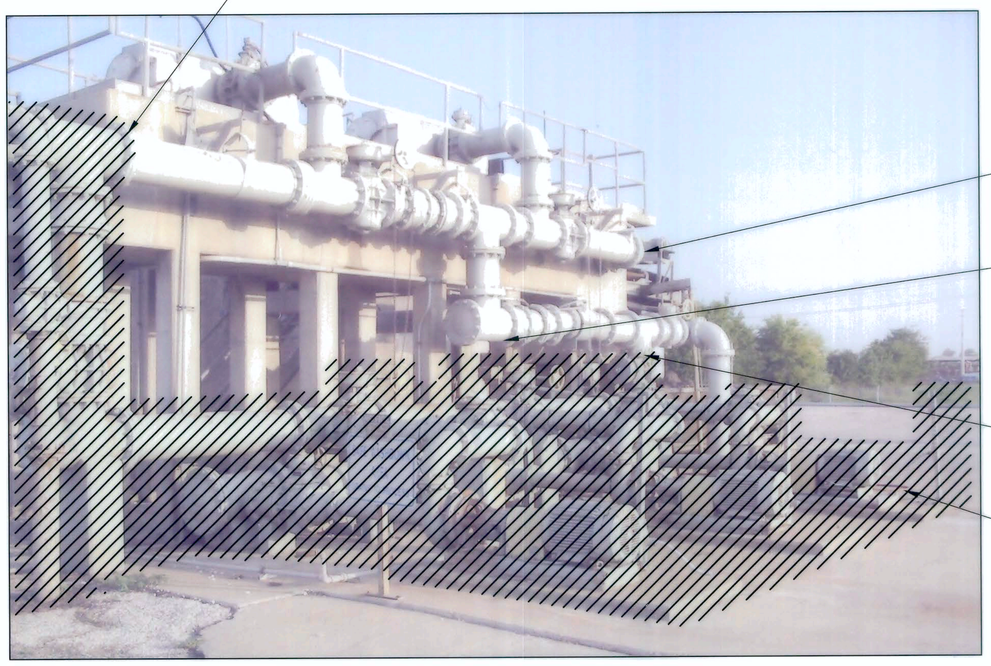

NOTES:

1. REMOVE THE EXISTING WAS PUMPS, DELIVER TO CITY WASTEWATER OPERATIONS TO BE SALVAGED. DEMOLISH PIPING AND SUPPORTS.
2. CLEAN UP THE EXISTING WAS PUMP SITE. REMOVE EXISTING SLAB, PIPING AND SUPPORTS.
3. REUSE THE EXISTING WAS INLET MANIFOLD.
4. THE EXISTING ELECTRICAL, INSTRUMENTATION AND CONTROLS REMAIN IN SERVICE.
5. REMOVE THE BYPASS 90 ELL. INSTALL A 14" TEE, FITTING & ADAPTER AS REQUIRED TO CONNECT WAS DISCHARGE FROM NEW SCREENING FACILITY.
6. CONTRACTOR SHALL FIELD VERIFY THE EXISTING SCREENING STRUCTURE ELEVATION, AND EXISTING PIPING ELEVATION TO MAKE PIPING CONNECTIONS.

No.	Date	Revisions	App.

STATE OF TEXAS
ROGER C. BROWN
52635
LICENSED PROFESSIONAL ENGINEER
12-12-08

klotz associates

Binkley & Barfield consulting engineers
1710 Seamist Drive
Houston, Texas 77008-3189
(713) 869-3433

SURVEYED BY: GEOSOLUTIONS | FIELD BOOK NO. : N/A

CITY OF HOUSTON
DEPARTMENT OF PUBLIC WORKS AND ENGINEERING

ALMEDA SIMS WWTP & SPF IMPROVEMENTS PACKAGE I

MODIFICATION OF EXISTING SCREENING FACILITY

AS BUILT

FILE NO:	WW4903
WBS:	R-000298-0004-4
DRAWING SCALE	3/16" = 1'-0"
CITY OF HOUSTON PM	IRAJ RANJBAR, P.E.
DWG NO. :	S-100
SHEET NO.	65 OF 109

PUBLIC WORKS AND ENGINEERING
ACCEPTED & FILED
44488
CITY DRAWING NUMBER
HOUSTON, TEXAS

G:\115800 Almeda\CADD_S-101 Screen Facility Foundation.dwg Feb 11,2008 - 3:40pm mjd

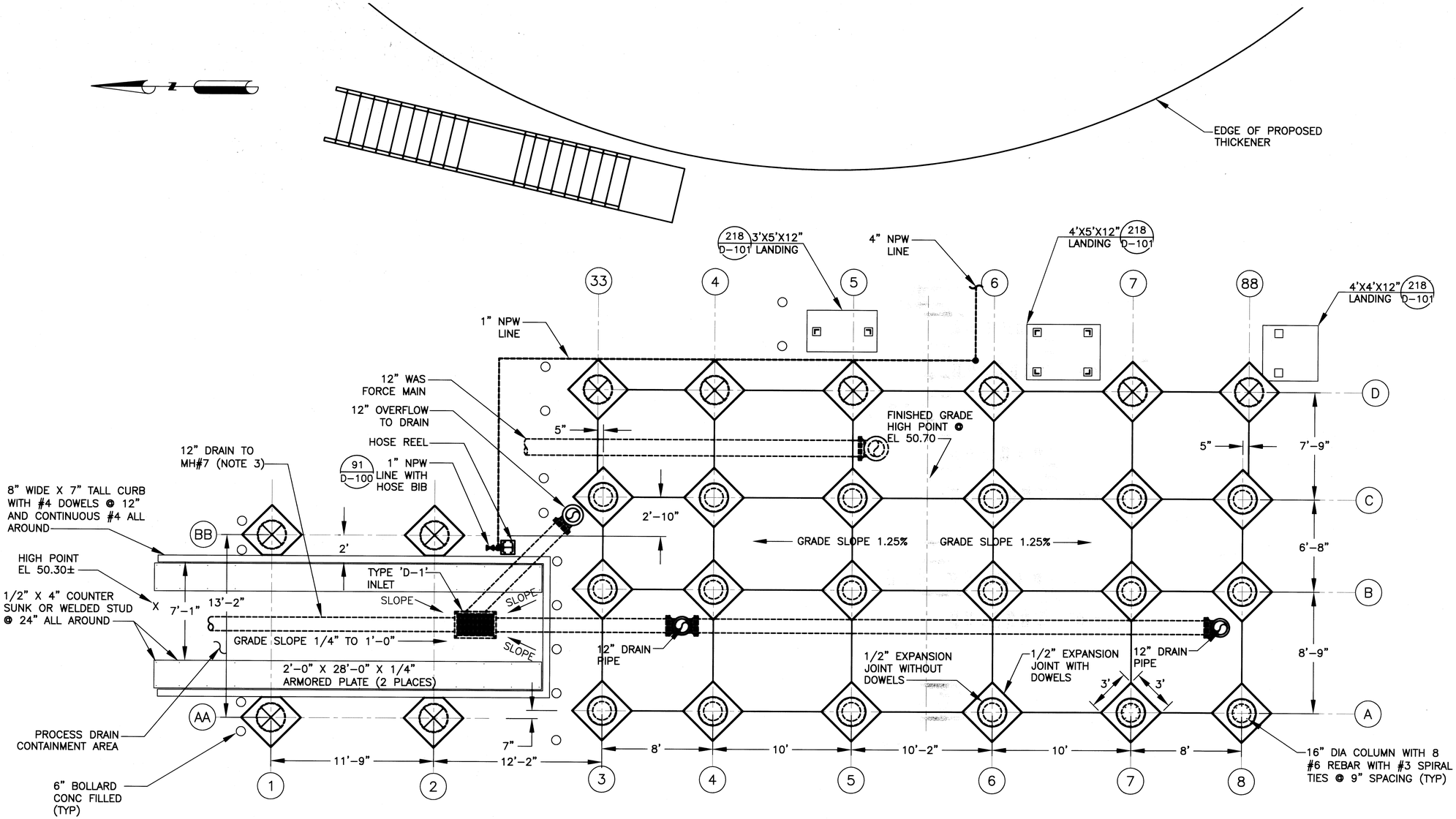

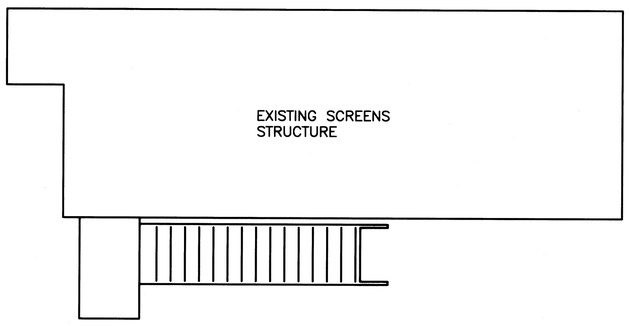

PROPOSED SCREENING FACILITY FOUNDATION PLAN

NOTES:

1. CONTRACTOR SHALL PERFORM FIELD PROBING AND POTHOLE TESTING TO LOCATE ANY EXISTING PIPELINE, ELEC. DUCTBANKS OR OTHER UTILITIES BEFORE DRILLING AND EXCAVATION.
2. REFER TO DRAWING S-100 AND C-401 FOR EXISTING SLAB DEMOLITION.
3. REFER TO DRAWING C-402 FOR NEW MANHOLES LOCATION, STORM DRAIN INLETS, DRAIN LINES, CONCRETE SLAB AND GRADE SLOPE.

LEGEND:

24" DIA. COLUMN (TYP) T.O.C. @ EL 53.50

24" DIA. COLUMN FOUNDATION, WITH 16" DIA. COLUMN ABOVE GRADE TO BOTTOM OF SLAB (TYP)

AS BUILT

No.	Date	Revisions	App.

STATE OF TEXAS — ROGER C. BROWN — 52635 — LICENSED PROFESSIONAL ENGINEER — 2-12-08

klotz associates

Binkley & Barfield consulting engineers
1710 Seamist Drive
Houston, Texas 77008-3189
(713) 869-3433

SURVEYED BY: GEOSOLUTIONS | FIELD BOOK NO. : N/A

CITY OF HOUSTON
DEPARTMENT OF PUBLIC WORKS AND ENGINEERING

ALMEDA SIMS WWTP & SPF IMPROVEMENTS PACKAGE I

PROPOSED SCREENING FACILITY FOUNDATION PLAN

FILE NO:	WW4903
WBS:	R-000298-0004-4
DRAWING SCALE	1/4" = 1'-0"
CITY OF HOUSTON PM	IRAJ RANJBAR, P.E.
DWG NO. :	S-101
SHEET NO.	66 OF 109

PUBLIC WORKS AND ENGINEERING — ACCEPTED & FILED — 44488 CITY DRAWING NUMBER — HOUSTON, TEXAS

COLOR TABLE:
ORIGINAL SCALE IN INCHES FOR REDUCED PLANS
0 1 2 3

G:\115800 Almeda\CADD_S-102 Prop Sludge Screen Struc Plan.dwg Feb 11,2008 - 3:39pm mjd

COLOR TABLE:

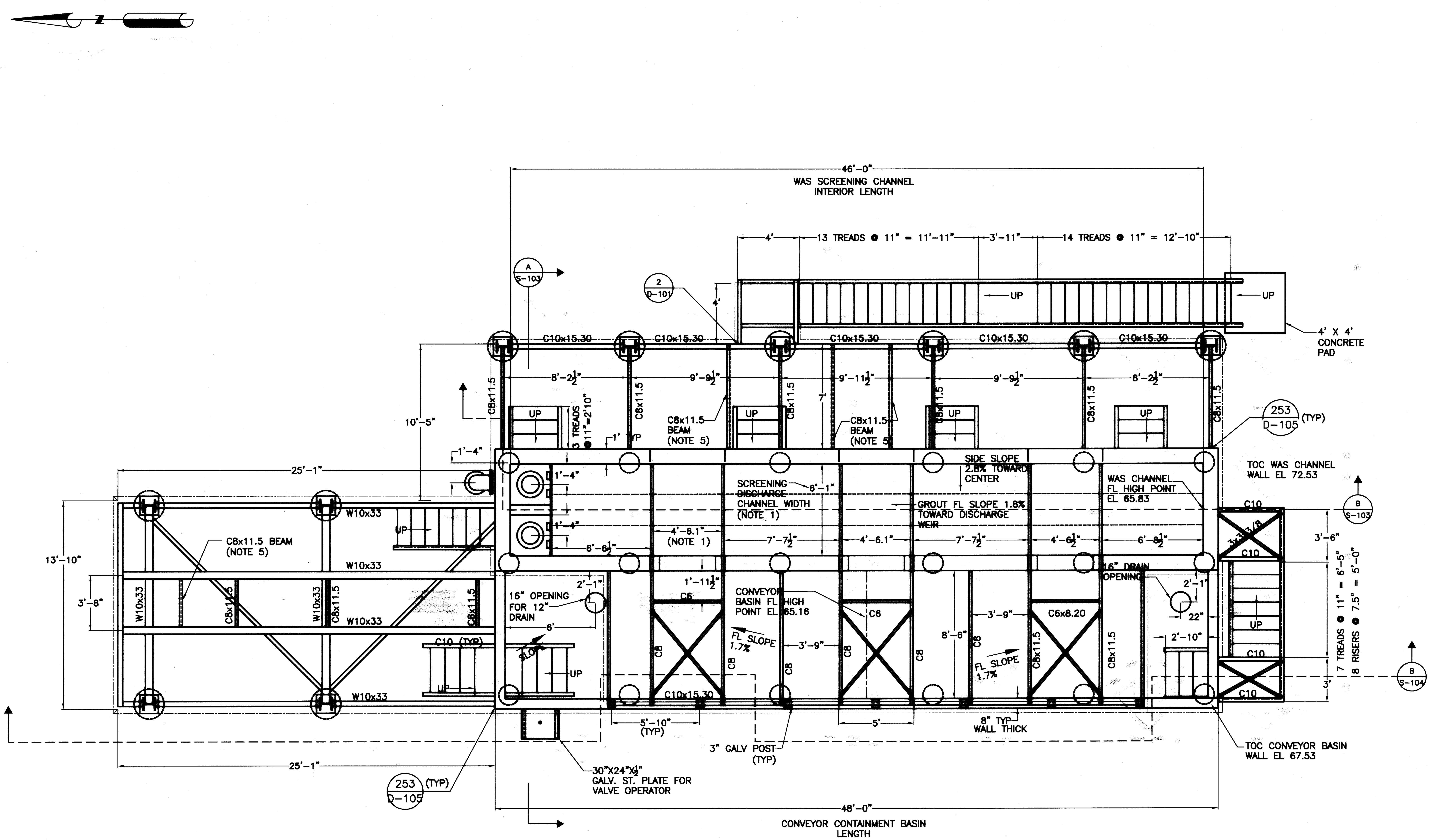

PROPOSED SCREENING FACILITY STRUCTURAL PLAN (A / S-102)

NOTES:

1. SCREENING FILTRATE DISCHARGE OPENING. DIMENSIONS SHOWN ARE BASED ON USING HYCOR MODEL ROTOSHEAR HRS3672DVTNB. USE OF OTHER SCREENS MODEL MAY REQUIRE MODIFICATION OF THE STRUCTURE
2. PROVIDE A 4'-6.5" BLOCK OUT FOR DRAIN PAN UNDER SCREEN
3. GROUT WAS CHANNEL FLOOR FROM HIGH POINT SLOPED 1.7% TOWARD DISCHARGE. SIDE SLOP 2.8% TOWARD CENTER.
4. GROUT CONVEYOR CONTAINMENT BASIN FLOOR FROM CENTER HIGH POINT, SLOPED 1.7% TOWARD BOTH DRAINS.
5. ADDITIONAL REQUIRED BEAMS FOR PIPE SUPPORTS SHALL BE FIELD LOCATED FOR EQUIPMENT FURNISHED (EST 10 REQUIRED)
6. ALL STEEL COMPONENTS SHALL BE HOT DIP GALVANIZED AFTER FABRICATION.

No.	Date	Revisions	App.

STATE OF TEXAS — ROGER C. BROWN — 52635 — LICENSED PROFESSIONAL ENGINEER — 2-12-08

klotz associates

Binkley & Barfield consulting engineers
1710 Seamist Drive
Houston, Texas 77008-3189
(713) 869-3433

SURVEYED BY: GEOSOLUTIONS | FIELD BOOK NO. : N/A

CITY OF HOUSTON
DEPARTMENT OF PUBLIC WORKS AND ENGINEERING

ALMEDA SIMS WWTP & SPF IMPROVEMENTS PACKAGE I

PROPOSED SCREENING FACILITY STRUCTURE PLAN

AS BUILT

FILE NO: WW4903
WBS: R-000298-0004-4
DRAWING SCALE 1/4" = 1'-0"
CITY OF HOUSTON PM IRAJ RANJBAR, P.E.
DWG NO. : S-102
SHEET NO. 67 OF 109

PUBLIC WORKS AND ENGINEERING ACCEPTED & FILED 44488 CITY DRAWING NUMBER HOUSTON, TEXAS

ORIGINAL SCALE IN INCHES FOR REDUCED PLANS 0 1 2 3

G:\115800 Almeda\CADD_S-103 Prop Screen Struc Profile.dwg Feb 11,2008 - 3:39pm mjd

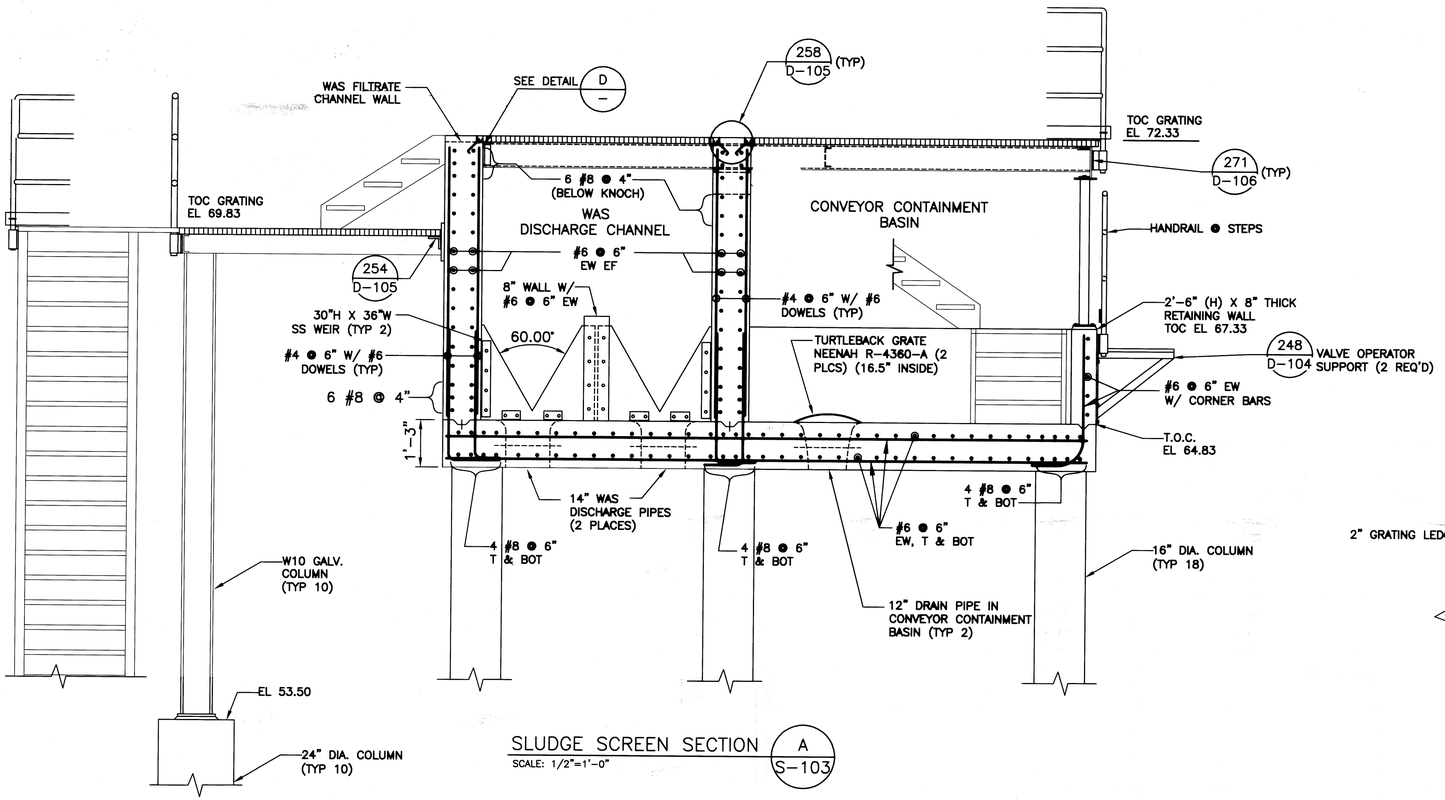

SLUDGE SCREEN SECTION A
SCALE: 1/2"=1'-0"
S-103

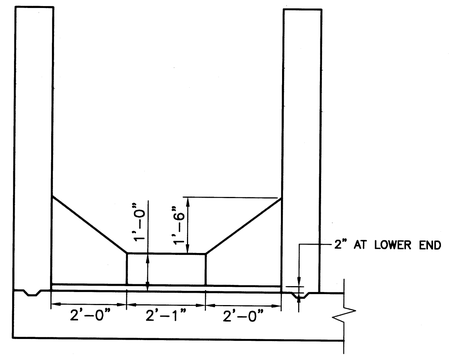

WAS CHANNEL GROUTING C
SCALE: 1/2"=1'-0"
S-103

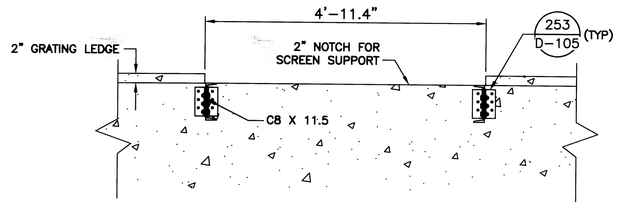

SCREEN INSTALLATION LOCATION DETAIL D
SCALE: 3/4"=1'-0"
S-103

NOTES:

1. SEE DRAWING M-202 FOR SCREENS MECHANICAL PLAN.
2. SEE STRUCTURE AND MECHANICAL DETAILS FOR STAIR, HAND RAILING, GRATING AND LANDING DETAILS.
3. PROVIDE 30" X 30" STAINLESS STEEL WEIR BOX.
4. CONTRACTOR MUST GROUND PROBING AND POTHOLE TESTING TO AVOID UNDERGROUND DUCTBANK OR PIPE LINE.

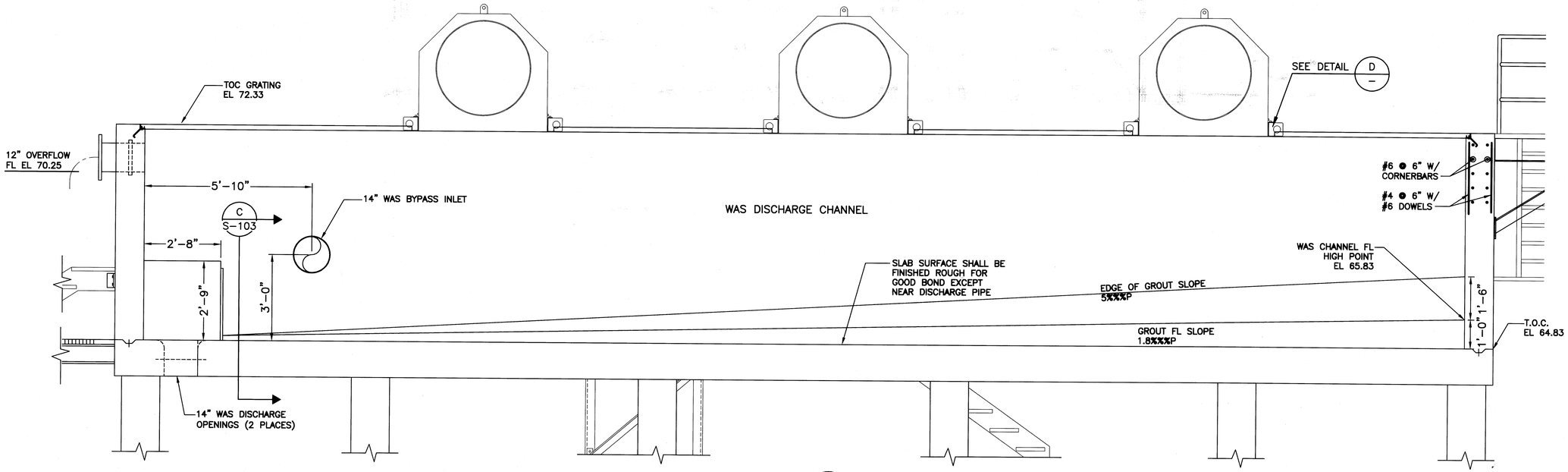

SLUDGE SCREEN SECTION B
SCALE: 1/2"=1'-0"
S-103

AS BUILT

COLOR TABLE:

ORIGINAL SCALE IN INCHES FOR REDUCED PLANS
0 1 2 3

No.	Date	Revisions	App.

STATE OF TEXAS
ROGER C. BROWN
52635
LICENSED PROFESSIONAL ENGINEER
2-12-08

klotz associates

Binkley & Barfield consulting engineers
1710 Seamist Drive
Houston, Texas 77008-3189
(713) 869-3433

SURVEYED BY: GEOSOLUTIONS | FIELD BOOK NO. : N/A

CITY OF HOUSTON
DEPARTMENT OF PUBLIC WORKS AND ENGINEERING

ALMEDA SIMS WWTP & SPF IMPROVEMENTS PACKAGE I

PROPOSED SCREENING FACILITY SECTIONS

FILE NO:	WW4903
WBS:	R-000298-0004-4
DRAWING SCALE	1/2" = 1'-0"
CITY OF HOUSTON PM	IRAJ RANJBAR, P.E.
DWG NO. :	S-103
SHEET NO.	68 OF 109

ACCEPTED & FILED
44488
CITY DRAWING NUMBER

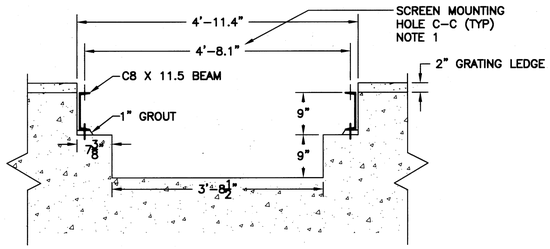

SCREEN INSTALLATION LOCATION DETAIL 1

SCALE: 3/4" = 1'-0"

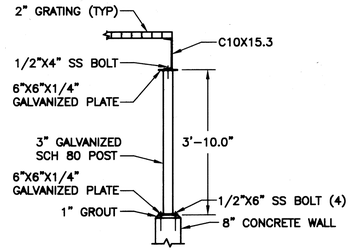

3" POST DETAIL 2

SCALE: 1/2" = 1'-0"

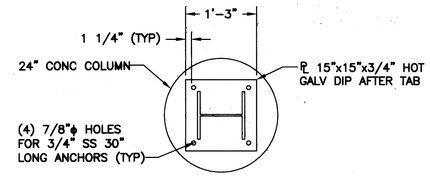

W10 BEAM MOUNTING PLATE DETAIL 3

SCALE: 3/4" = 1'-0"

NOTES:

1. SCREENING FILTRATE DISCHARGE OPENING. DIMENSIONS SHOWN ARE BASED ON USING HYCOR MODEL ROTOSHEAR HRS3672DVTNB. USE OF OTHER SCREENS MODEL MAY REQUIRE MODIFICATION OF THE STRUCTURE
2. SEE DRAWING M-200 FOR SCREENING FACILITY PLAN.
3. SEE STRUCTURE AND MECHANICAL DETAILS FOR STAIR, HAND RAILING, GRATING AND LANDING DETAILS.
4. CONTRACTOR MUST GROUND PROBING AND POTHOLE TESTING TO AVOID UNDERGROUND DUCTBANK OR PIPE LINE.
5. SEE C-401 FOR PAVING EDGE AND DRAIN SLOPE.
6. PROPOSED SCREENING FACILITY ELEVATION IS BASED ON NAVD 88 2001 ADJUSTED.
7. ALL STEEL COMPONENTS SHALL BE HOT DIP GALVANIZED AFTER FABRICATION.

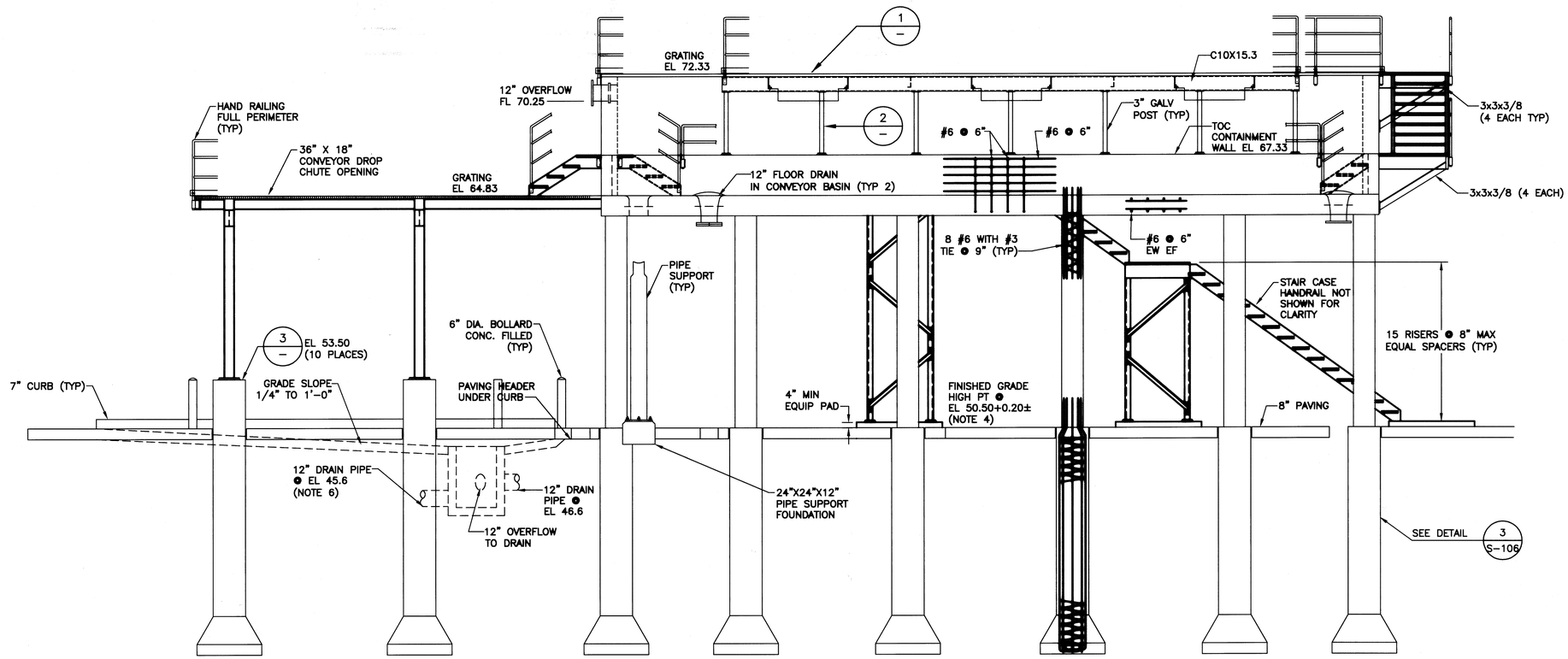

SCREENS FACILITY WEST ELEVATION B

SCALE: 1/4"=1'-0" S-102

AS BUILT

No.	Date	Revisions	App.

STATE OF TEXAS — ROGER C. BROWN — 52635 — LICENSED PROFESSIONAL ENGINEER — 9-12-08

klotz associates

Binkley & Barfield consulting engineers
1710 Seamist Drive
Houston, Texas 77008-3189
(713) 869-3433

SURVEYED BY: GEOSOLUTIONS | FIELD BOOK NO. : N/A

CITY OF HOUSTON
DEPARTMENT OF PUBLIC WORKS AND ENGINEERING

ALMEDA SIMS WWTP & SPF IMPROVEMENTS PACKAGE I

PROPOSED SCREENING FACILITY WEST ELEVATION

FILE NO:	WW4903
WBS:	R-000298-0004-4
DRAWING SCALE	1/4" = 1'-0"
CITY OF HOUSTON PM	IRAJ RANJBAR, P.E.
DWG NO. :	S-104
SHEET NO.	69 OF 109

PUBLIC WORKS AND ENGINEERING — ACCEPTED & FILED — 44488 CITY DRAWING NUMBER — HOUSTON, TEXAS

G:\115800 Almeda\CADD_S-104 Prop Sludge Screen Profile.dwg Feb 11,2008 - 5:14pm mjd
COLOR TABLE:
ORIGINAL SCALE IN INCHES FOR REDUCED PLANS
0 1 2 3

G:\115800 Almeda\CADD_S-105 Screen Struc Grating Plan.dwg Feb 11,2008 - 3:38pm mjd

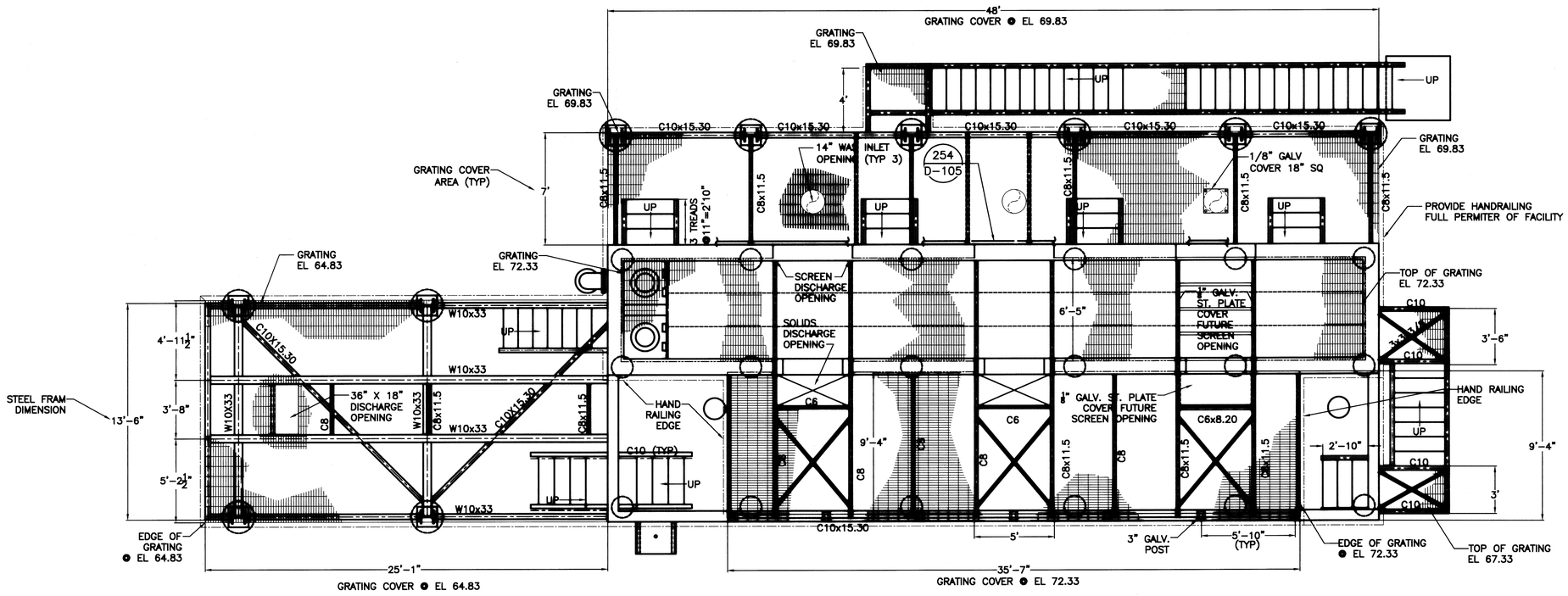

PROPOSED SCREENING FACILITY GRATING PLAN

NOTES:

1. ALL GRATING AND STRUCTURAL SUPPORT FRAMEWORK COMPONENTS SHALL BE HOT DIPPED GALVANIZED AFTER FABRICATION WITH SS BOLTS, WASHERS AND NUTS.
2. PROVIDE A 4'-6.5" BLOCK OUT FOR DRAIN PAN UNDER SCREEN.
3. REFER TO DRAWING D-101 AND D-105 FOR GRATING DETAILS.
4. GRATING SHALL BE DESIGNED FOR 75LBS/SQ FT LIVE LOAD WITH LESS THAN L/180 DEFLECTION.

AS BUILT

No.	Date	Revisions	App.

ROGER C. BROWN 52635 LICENSED PROFESSIONAL ENGINEER — 12-09

klotz associates

Binkley & Barfield consulting engineers
1710 Seamist Drive
Houston, Texas 77008-3189
(713) 989-3433

SURVEYED BY: GEOSOLUTIONS | FIELD BOOK NO. : N/A

CITY OF HOUSTON
DEPARTMENT OF PUBLIC WORKS AND ENGINEERING

ALMEDA SIMS WWTP & SPF IMPROVEMENTS PACKAGE I

PROPOSED SCREENING FACILITY GRATING PLAN

FILE NO:	WW4903
WBS:	R-000298-0004-4
DRAWING SCALE	1/4" = 1'-0"
CITY OF HOUSTON PM	IRAJ RANJBAR, P.E.
DWG NO. :	S-105
SHEET NO.	70 OF 109

ACCEPTED & FILED — 44488 CITY DRAWING NUMBER — HOUSTON, TEXAS

COLOR TABLE:

ORIGINAL SCALE IN INCHES FOR REDUCED PLANS
0 1 2 3

G:\115800 Almeda\CADD_S-106 Struc Detail.dwg Feb 11,2008 - 3:37pm mjd

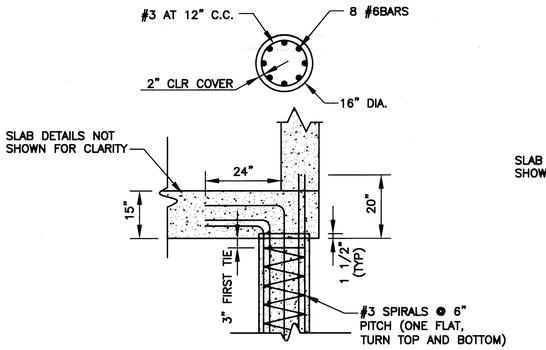

EXTERIOR COLUMN CONNECTION DETAIL 1
SCALE: 1/2"=1'-0" (TYPICAL)

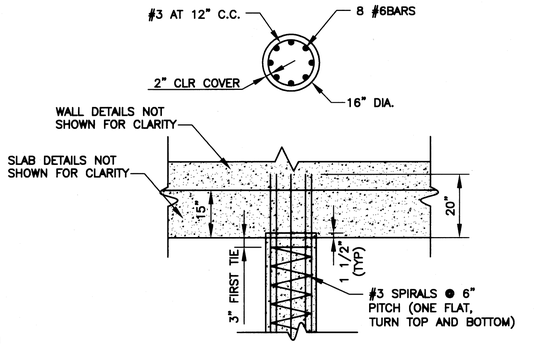

INTERIOR COLUMN CONNECTION DETAIL 2
SCALE: 1/2"=1'-0" (TYPICAL)

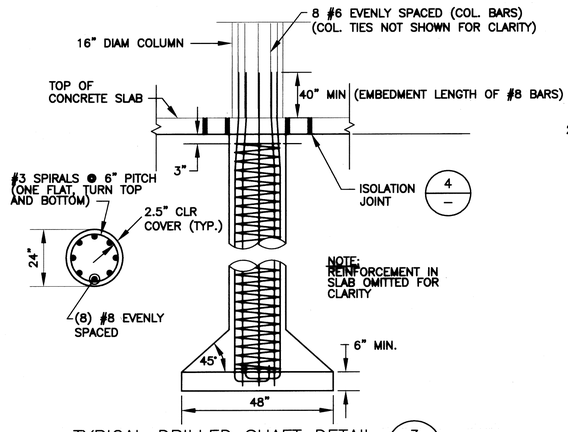

TYPICAL DRILLED SHAFT DETAIL 3
SCALE: 1/2"=1'-0"

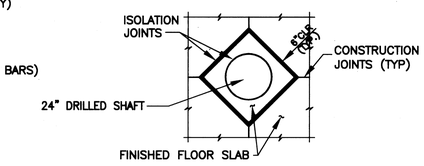

ISOLATION JOINT 4
SCALE: N.T.S.

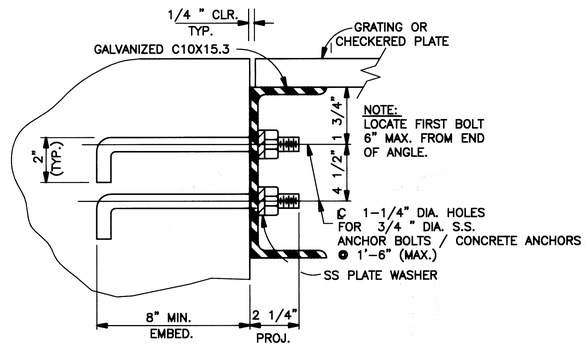

LEDGER HEAVY CHANNEL DETAIL 5
SCALE: N.T.S. (TYPICAL)

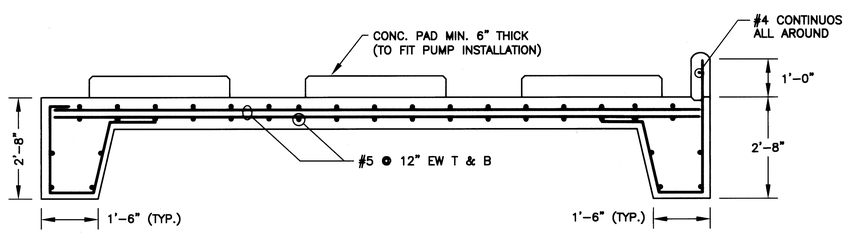

CONC. SLAB SECTION DETAIL A
SCALE: 1/2"=1'-0"

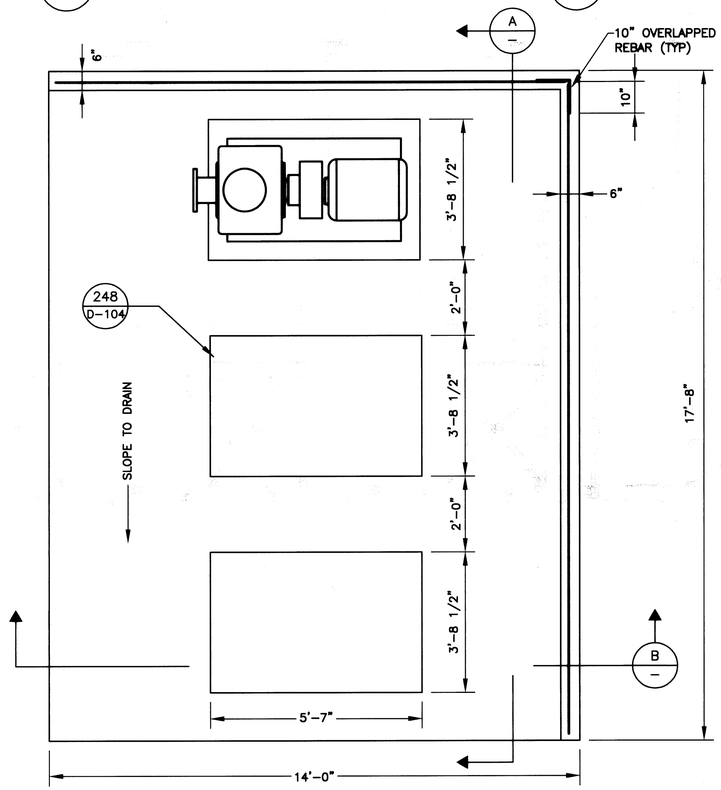

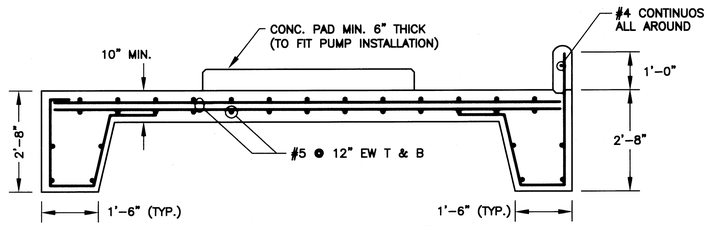

CONC. SLAB SECTION DETAIL B
SCALE: 1/2"=1'-0"

AS BUILT

No.	Date	Revisions	App.

STATE OF TEXAS
ROGER C. BROWN
52635
LICENSED PROFESSIONAL ENGINEER
1-12-08

klotz associates

Binkley & Barfield consulting engineers
1710 Seamist Drive
Houston, Texas 77008-3189
(713) 869-3433

SURVEYED BY: GEOSOLUTIONS | FIELD BOOK NO. : N/A

CITY OF HOUSTON
DEPARTMENT OF PUBLIC WORKS AND ENGINEERING

ALMEDA SIMS WWTP & SPF IMPROVEMENTS PACKAGE I

STRUCTURE DETAILS

FILE NO:	WW4903
WBS:	R-000298-0004-4
DRAWING SCALE	
	NTS
CITY OF HOUSTON PM	
	IRAJ RANJBAR, P.E.
DWG NO. :	S-106
SHEET NO.	71 OF 109

PUBLIC WORKS AND ENGINEERING
ACCEPTED & FILED
44488
CITY DRAWING NUMBER
HOUSTON, TEXAS

COLOR TABLE:

ORIGINAL SCALE IN INCHES FOR REDUCED PLANS
0 1 2 3

J:\0620.002.000\07.00 CADD\Package 1\Structural\Prop SThickener Plan.dwg Feb 11,2008 - 10:25am lewiss

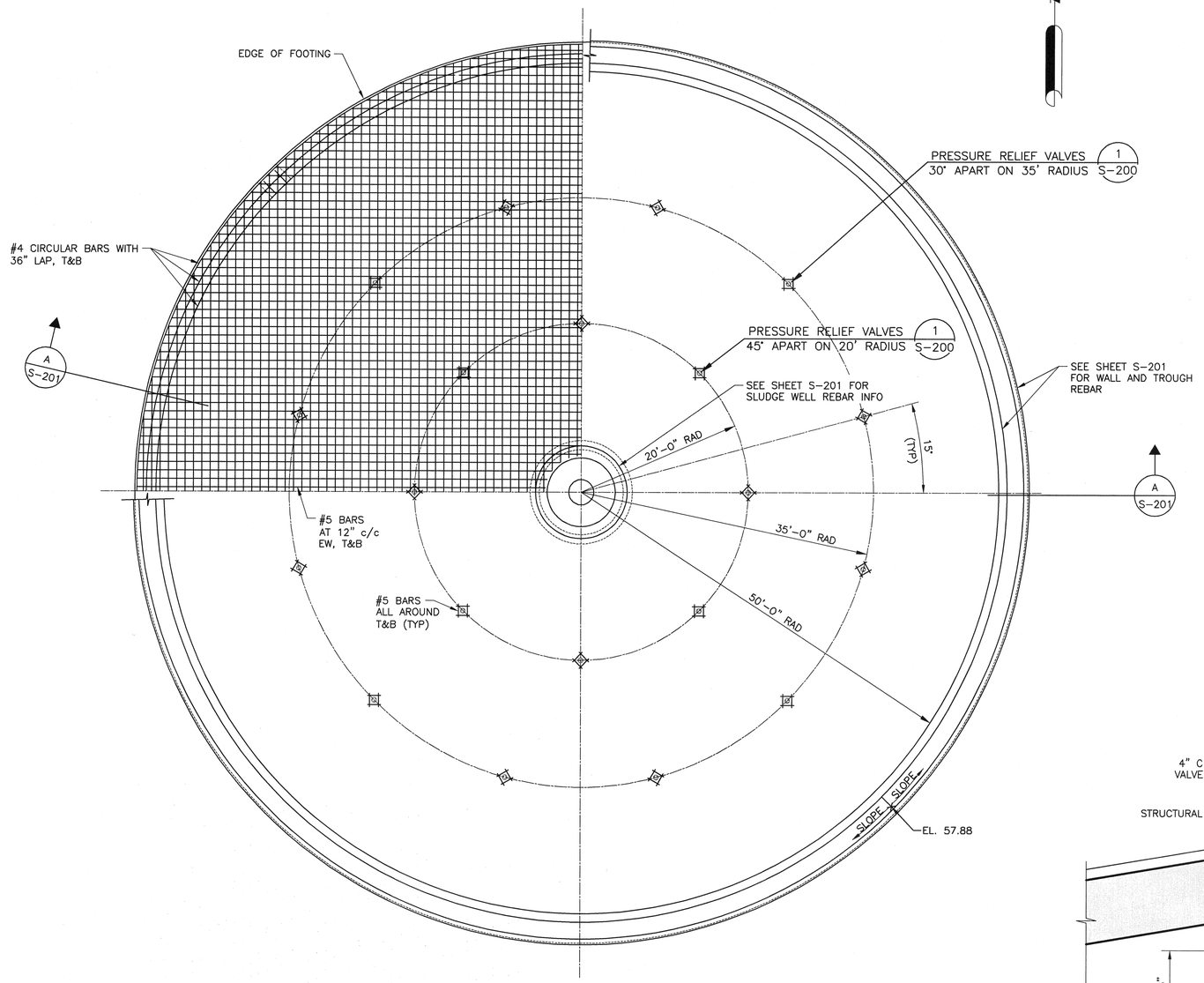

PLAN
1/8" = 1'-0"

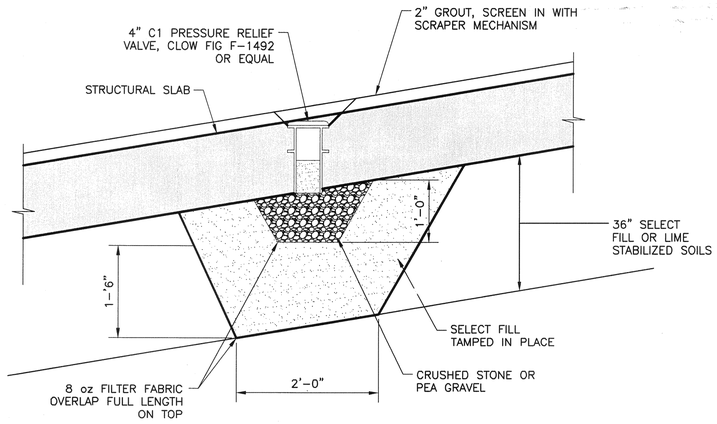

DETAIL (1 / —)
N.T.S.

RECORD DRAWING

THE CONSTRUCTION CONTRACTOR RECORDED CHANGES MADE DURING CONSTRUCTION ON PRINTS OF THE CONTRACT DRAWINGS.

KLOTZ ASSOCIATES, INC. HAS CREATED THIS RECORD DRAWING BY POSTING THE INFORMATION SUBMITTED BY THE CONTRACTOR ON THE ORIGINALS OF THE CONTRACT DRAWINGS. ATTESTED BY:

SIGNATURE:
NAME: RALPH E. COX, P.E.
DATE: 12/02/11

No.	Date	Revisions	App.

STATE OF TEXAS
JOE FRANK POTTER
36347
REGISTERED PROFESSIONAL ENGINEER
02/11/08

klotz associates

Binkley & Barfield
consulting engineers
1710 Seamist Drive
Houston, Texas 77008-3189
(713) 869-3433

SURVEYED BY: GEOSOLUTIONS | FIELD BOOK NO. : N/A

CITY OF HOUSTON
DEPARTMENT OF PUBLIC WORKS AND ENGINEERING

ALMEDA SIMS WWTP & SPF IMPROVEMENTS PACKAGE I

100-FT THICKENER STRUCTURAL PLAN

FILE NO:	WW4903
WBS:	000298-0004-4
DRAWING SCALE	AS SHOWN
CITY OF HOUSTON PM	IRAJ RANJBAR, P.E.
DWG NO. :	S-200
SHEET NO.	72 OF 109

PUBLIC WORKS AND ENGINEERING
ACCEPTED & FILED
14488
CITY DRAWING NUMBER
HOUSTON, TEXAS

COLOR TABLE:

ORIGINAL SCALE IN INCHES FOR REDUCED PLANS
0 1 2 3

J:\0620.002.000\07.00 CADD\Package 1\Structural\Prop SThickener Section.dwg Feb 08,2008 - 8:28am ramirezm

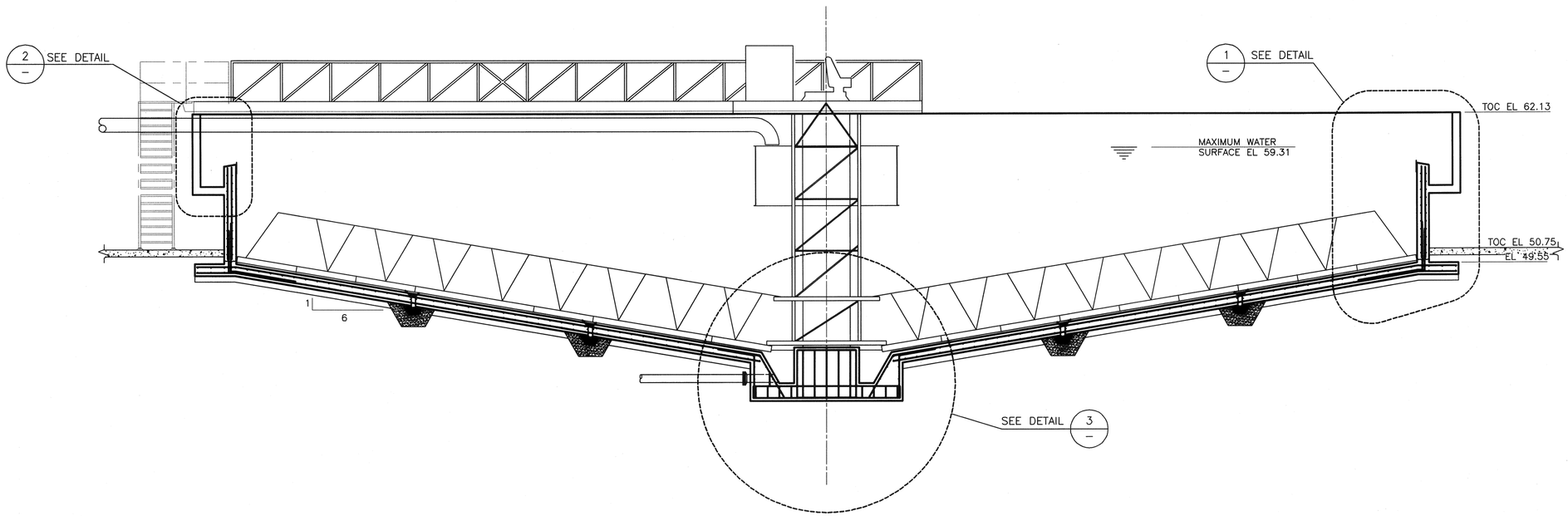

SECTION A
SCALE: 3/16"=1'-0"
S-200

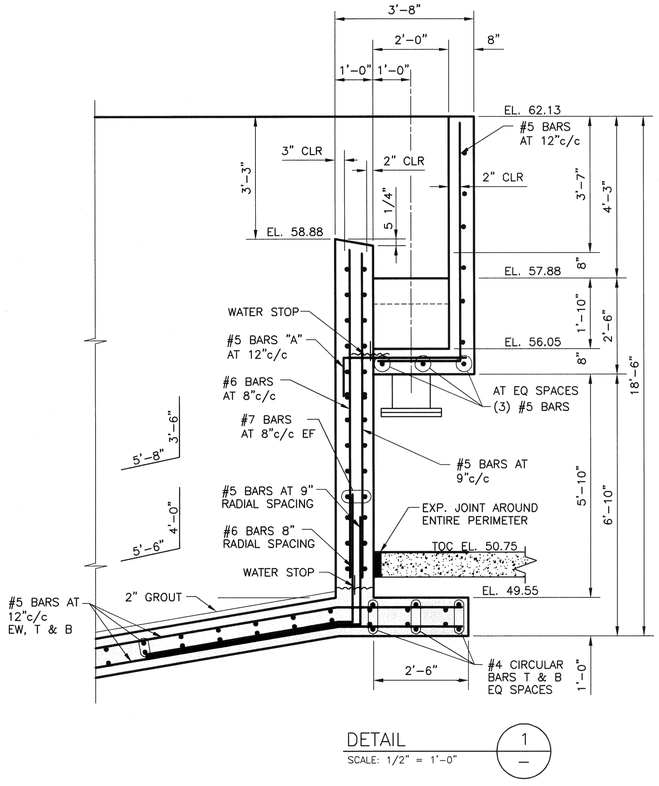

DETAIL 1
SCALE: 1/2" = 1'-0"

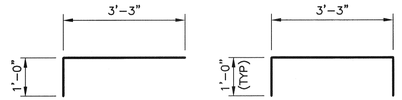

BAR "A" BAR "B"

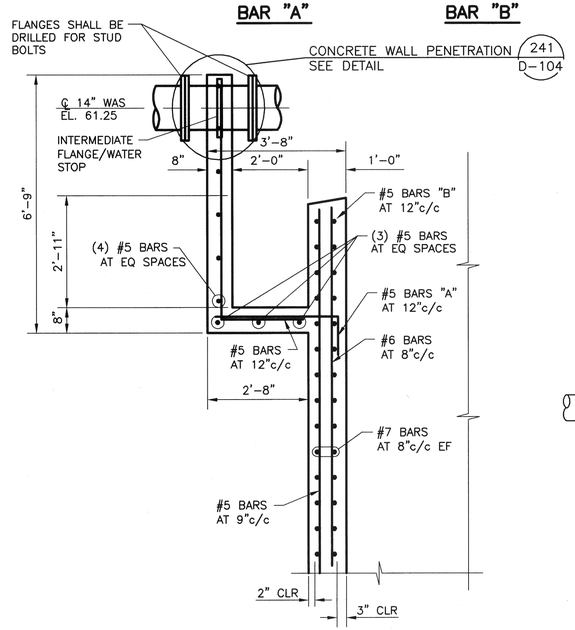

DETAIL 2
SCALE: 1/2" = 1'-0"

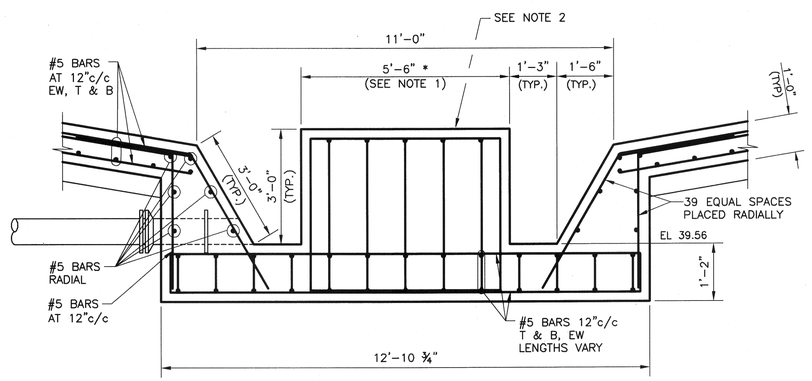

DETAIL 3
SCALE: 1/2" = 1'-0"

NOTES:

1. DIMENSIONS SHOWN WITH AN ASTERICK (*) ARE APPROXIMATE. ACTUAL DIMENSION WILL DEPEND ON EQUIPMENT MANUFACTURER.
2. SIZE AND SPACING OF ANCHOR BOLTS SHALL BE IN ACCORDANCE WITH EQUIPMENT MANUFACTURERS RECOMMENDATIONS. USE 304 SS ANCHOR BOLTS AND RELATED APPURTENANCES.

RECORD DRAWING

THE CONSTRUCTION CONTRACTOR RECORDED CHANGES MADE DURING CONSTRUCTION ON PRINTS OF THE CONTRACT DRAWINGS.

KLOTZ ASSOCIATES, INC. HAS CREATED THIS RECORD DRAWING BY POSTING THE INFORMATION SUBMITTED BY THE CONTRACTOR ON THE ORIGINALS OF THE CONTRACT DRAWINGS. ATTESTED BY:

SIGNATURE:
NAME: RALPH E. COX, P.E.
DATE: 12/02/11

No.	Date	Revisions	App.

STATE OF TEXAS
JOE FRANK POTTER
36347
REGISTERED
PROFESSIONAL ENGINEER
12/11/11

klotz associates

Binkley & Barfield
consulting engineers
1710 Seamist Drive
Houston, Texas 77008-3189
(713) 869-3433

SURVEYED BY: GEOSOLUTIONS | FIELD BOOK NO. : N/A

CITY OF HOUSTON
DEPARTMENT OF PUBLIC WORKS AND ENGINEERING

ALMEDA SIMS WWTP & SPF IMPROVEMENTS PACKAGE I

100-FT THICKENER
STRUCTURAL
SECTION & DETAILS

FILE NO:	WW4903
WBS:	000298-0004-4
DRAWING SCALE	AS SHOWN
CITY OF HOUSTON PM	IRAJ RANJBAR, P.E.
DWG NO. :	S-201
SHEET NO.	73 OF 109

PUBLIC WORKS AND ENGINEERING
ACCEPTED & FILED
44488
CITY DRAWING NUMBER
HOUSTON, TEXAS

COLOR TABLE:

ORIGINAL SCALE IN INCHES
FOR REDUCED PLANS
0 1 2 3

J:\0620.002.000\07.00 CADD\Package 1\Structural\Prop STWAS pump Station.dwg Feb 08,2008 - 9:45am ramirezn

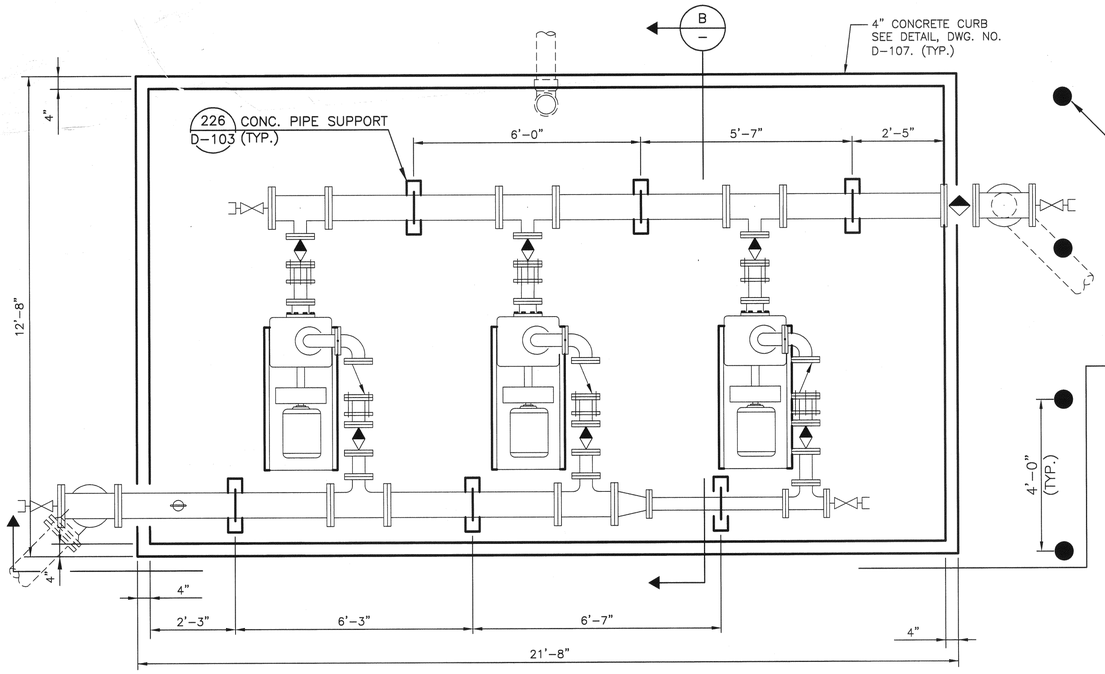

PLAN
SCALE: 1/2"=1'-0"

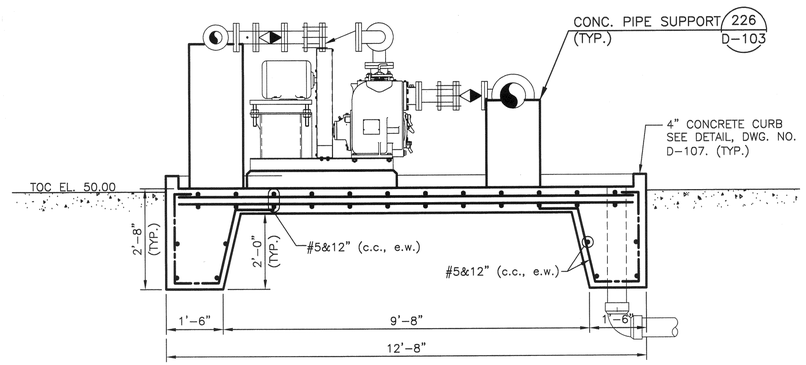

SECTION B
SCALE: 1/2"=1'-0"

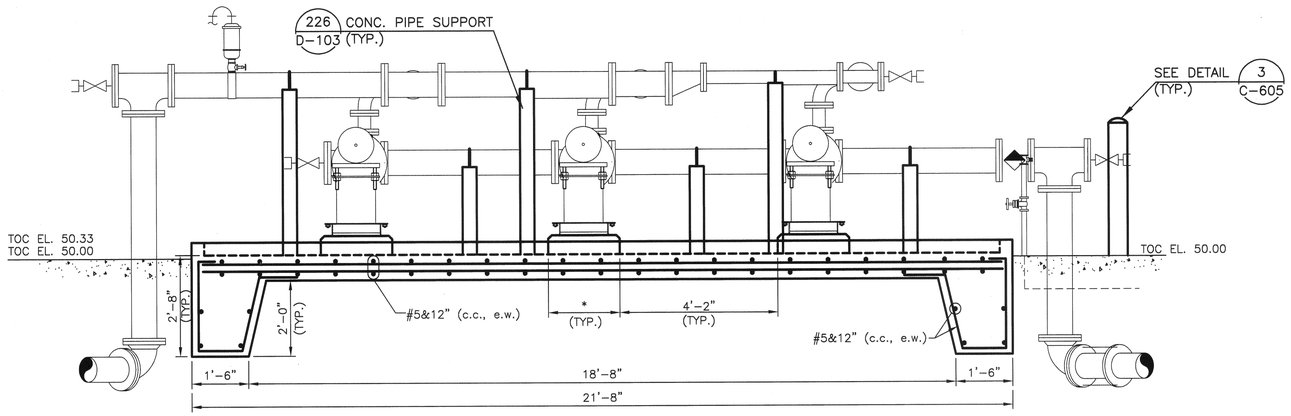

* ACTUAL DIMENSION TO BE VERIFIED BY EQUIPMENT MANUFACTURER.

SECTION A
SCALE: 1/2"=1'-0"

RECORD DRAWING

THE CONSTRUCTION CONTRACTOR RECORDED CHANGES MADE DURING CONSTRUCTION ON PRINTS OF THE CONTRACT DRAWINGS.

KLOTZ ASSOCIATES, INC. HAS CREATED THIS RECORD DRAWING BY POSTING THE INFORMATION SUBMITTED BY THE CONTRACTOR ON THE ORIGINALS OF THE CONTRACT DRAWINGS. ATTESTED BY:

SIGNATURE:
NAME: RALPH E. COX P.E.
DATE: 12/02/11

No.	Date	Revisions	App.

STATE OF TEXAS
JOE FRANK POTTER
36347
REGISTERED PROFESSIONAL ENGINEER
12/11/08

klotz associates

Binkley & Barfield consulting engineers
1710 Seamist Drive
Houston, Texas 77008-3189
(713) 869-3433

SURVEYED BY: GEOSOLUTIONS | FIELD BOOK NO. : N/A

CITY OF HOUSTON
DEPARTMENT OF PUBLIC WORKS AND ENGINEERING

ALMEDA SIMS WWTP & SPF IMPROVEMENTS PACKAGE I

THICKENED SLUDGE PUMP STATION STRUCTURAL PLAN AND SECTIONS

FILE NO:	WW4903
WBS:	000298-0004-4
DRAWING SCALE	
AS SHOWN	
CITY OF HOUSTON PM,	
IRAJ RANJBAR, P.E.	
DWG NO. :	S-300
SHEET NO.	74 OF 109

PUBLIC WORKS AND ENGINEERING ACCEPTED & FILED
44488
CITY DRAWING NUMBER
HOUSTON, TEXAS

COLOR TABLE:

ORIGINAL SCALE IN INCHES FOR REDUCED PLANS
0 1 2 3

J:\0620.002.000\07.00 CADD\Package 1\Structural\Prop STSHT Plan.dwg Feb 08,2008 - 9:46am ramirezm

COLOR TABLE:

ORIGINAL SCALE IN INCHES
FOR REDUCED PLANS
0 1 2 3

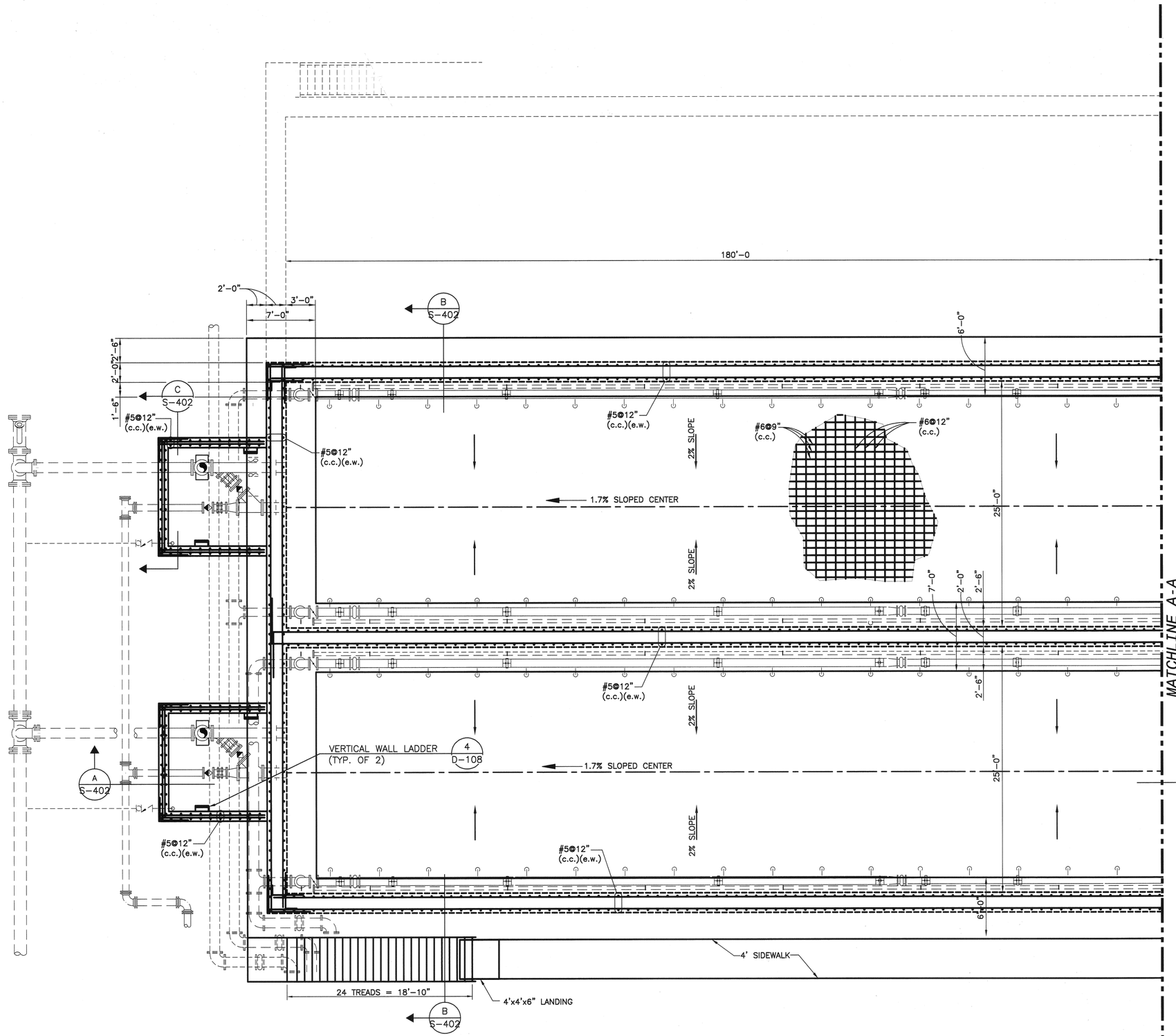

PLAN
SCALE: 3/16"=1'-0"

NOTE:

1. SEE DETAIL 241 ON DWG NO. D-104 FOR CONCRETE WALL PIPE PENETRATION DETAIL.

No.	Date	Revisions	App.

STATE OF TEXAS
JOE FRANK POTTER
38347
REGISTERED
PROFESSIONAL ENGINEER
P.E.
12/2/11

klotz associates

Binkley & Barfield
consulting engineers
1710 Seamist Drive
Houston, Texas 77008-3189
(713) 869-3433

SURVEYED BY: GEOSOLUTIONS | FIELD BOOK NO. : N/A

CITY OF HOUSTON
DEPARTMENT OF PUBLIC WORKS AND ENGINEERING

ALMEDA SIMS WWTP & SPF IMPROVEMENTS PACKAGE I

SLUDGE HOLDING TANK STRUCTURAL PLAN (SHEET 1)

RECORD DRAWING

THE CONSTRUCTION CONTRACTOR RECORDED CHANGES MADE DURING CONSTRUCTION ON PRINTS OF THE CONTRACT DRAWINGS.

KLOTZ ASSOCIATES, INC. HAS CREATED THIS RECORD DRAWING BY POSTING THE INFORMATION SUBMITTED BY THE CONTRACTOR ON THE ORIGINALS OF THE CONTRACT DRAWINGS. ATTESTED BY:

SIGNATURE:
NAME: RALPH E. COX, P.E.
DATE: 12/02/11

FILE NO:	WW4903
WBS:	000298-0004-4
DRAWING SCALE	AS SHOWN
CITY OF HOUSTON PM	IRAJ RANJBAR, P.E.
DWG NO. :	S-400
SHEET NO.	75 OF 109

PUBLIC WORKS AND ENGINEERING
ACCEPTED & FILED
44488
CITY DRAWING NUMBER
HOUSTON, TEXAS

J:\0620.002.000\07.00 CADD\Package 1\Structural\Prop STSHT Plan.dwg Feb 08,2008 - 9:46am ramirezn

COLOR TABLE:

ORIGINAL SCALE IN INCHES FOR REDUCED PLANS

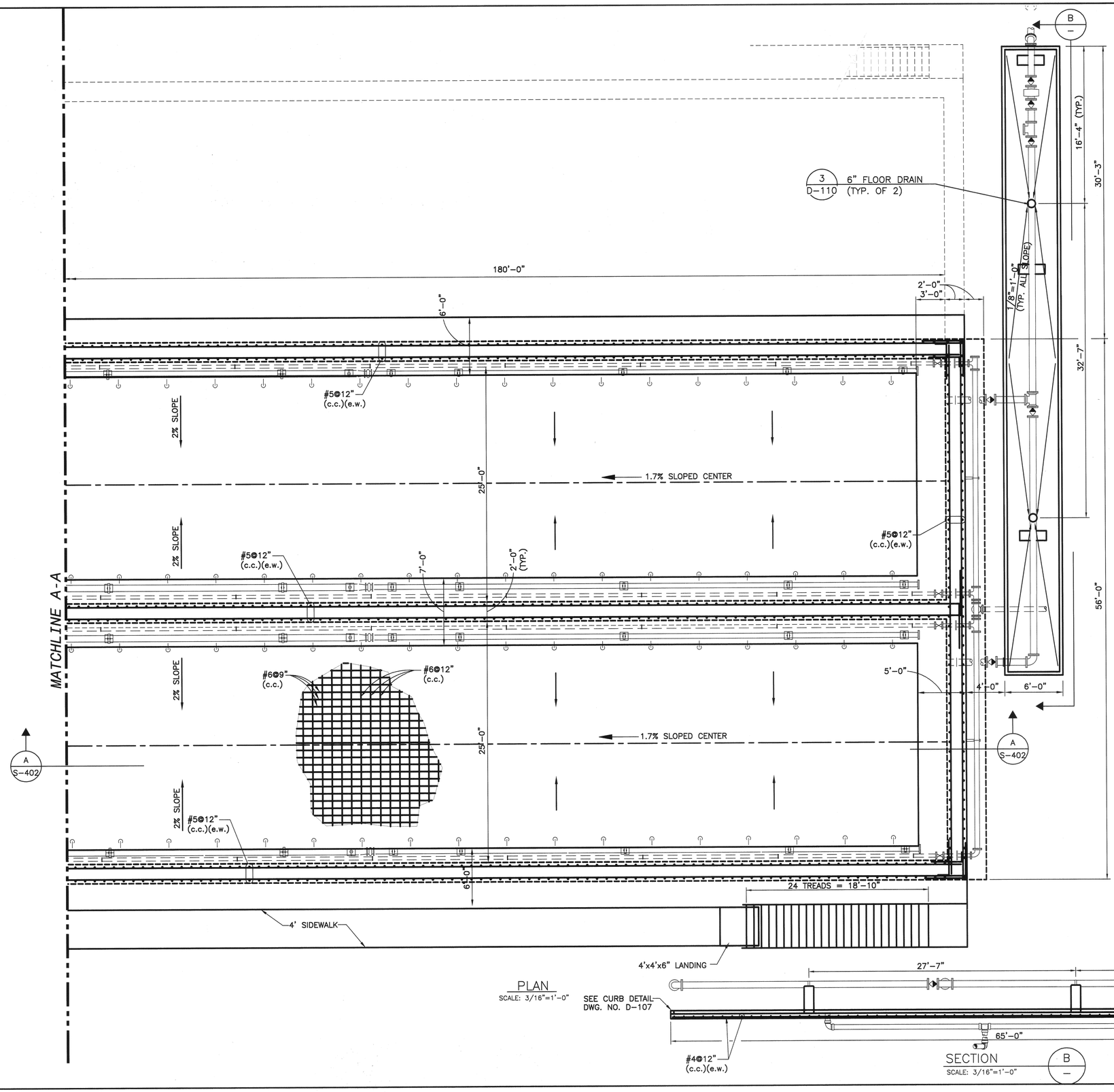

PLAN
SCALE: 3/16"=1'-0"

SEE CURB DETAIL
DWG. NO. D-107

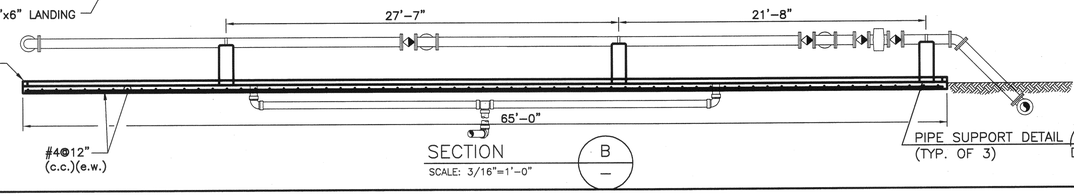

SECTION
SCALE: 3/16"=1'-0"

B
—

PIPE SUPPORT DETAIL
(TYP. OF 3)

227
D-103

NOTE:

1. SEE DETAIL 241 ON DWG NO. D-104 FOR CONCRETE WALL PIPE PENETRATION DETAIL.

RECORD DRAWING

THE CONSTRUCTION CONTRACTOR RECORDED CHANGES MADE DURING CONSTRUCTION ON PRINTS OF THE CONTRACT DRAWINGS.

KLOTZ ASSOCIATES, INC. HAS CREATED THIS RECORD DRAWING BY POSTING THE INFORMATION SUBMITTED BY THE CONTRACTOR ON THE ORIGINALS OF THE CONTRACT DRAWINGS. ATTESTED BY:

SIGNATURE:

NAME: RALPH E. COX, P.E.

DATE: 12/02/11

No.	Date	Revisions	App.

STATE OF TEXAS
JOE FRANK POTTER
36347
REGISTERED
PROFESSIONAL ENGINEER
Joe Frank Potter, P.E.
02/11/08

klotz associates

Binkley & Barfield
consulting engineers
1710 Seamist Drive
Houston, Texas 77008-3189
(713) 869-3433

SURVEYED BY: GEOSOLUTIONS | FIELD BOOK NO. : N/A

CITY OF HOUSTON
DEPARTMENT OF PUBLIC WORKS AND ENGINEERING

ALMEDA SIMS WWTP & SPF IMPROVEMENTS PACKAGE I

SLUDGE HOLDING TANK STRUCTURAL PLAN (SHEET 2)

FILE NO:	WW4903
WBS:	000298-0004-4
DRAWING SCALE	AS SHOWN
CITY OF HOUSTON PM	IRAJ RANJBAR, P.E.
DWG NO. :	S-401
SHEET NO.	76 OF 109

PUBLIC WORKS AND ENGINEERING
ACCEPTED & FILED
44488
CITY DRAWING NUMBER
HOUSTON, TEXAS

J:\0620.002.000\07.00 CADD\Package 1\Structural\Prop STSHT Section1.dwg Feb 11,2008 - 7:18am ramirezm

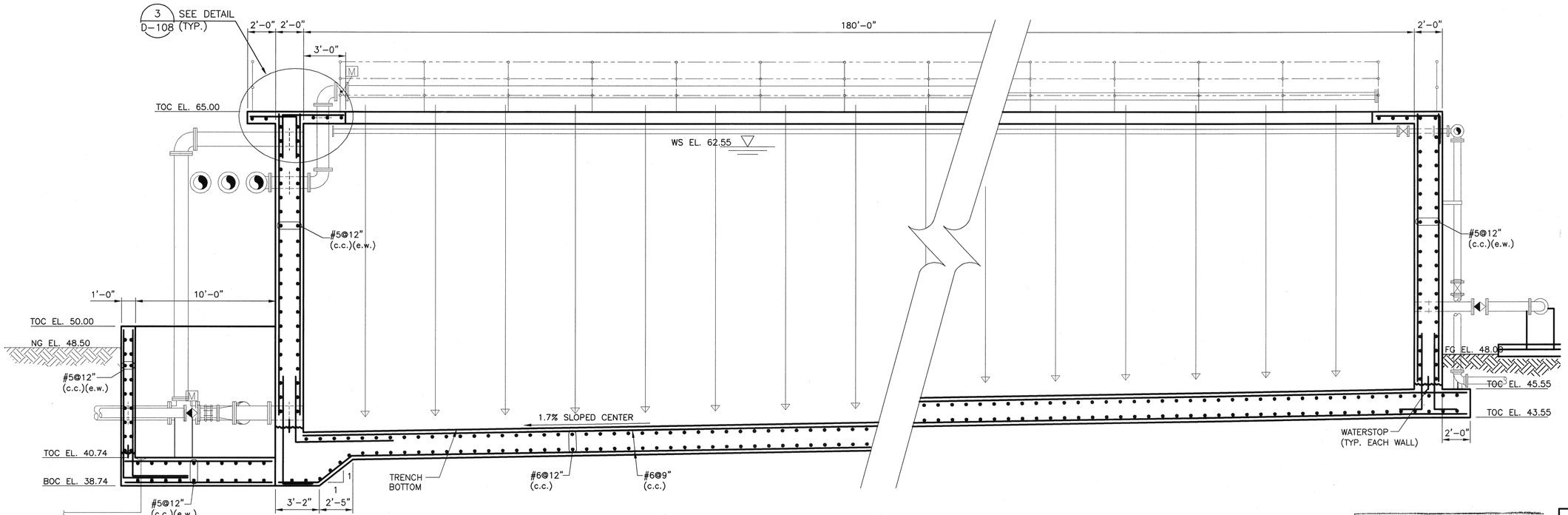

SECTION A
SCALE: 1/4"=1'-0"

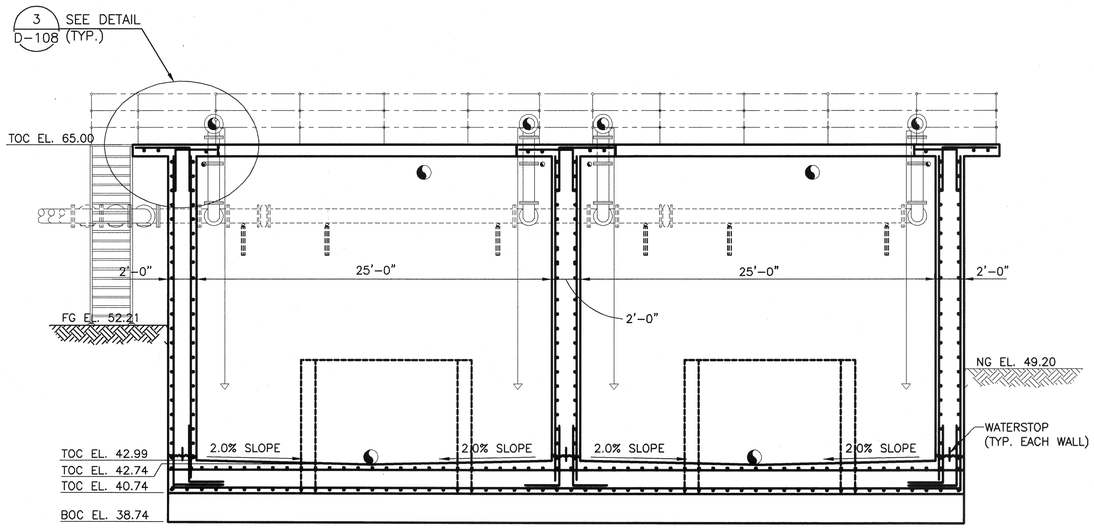

SECTION B
SCALE: 3/16"=1'-0"

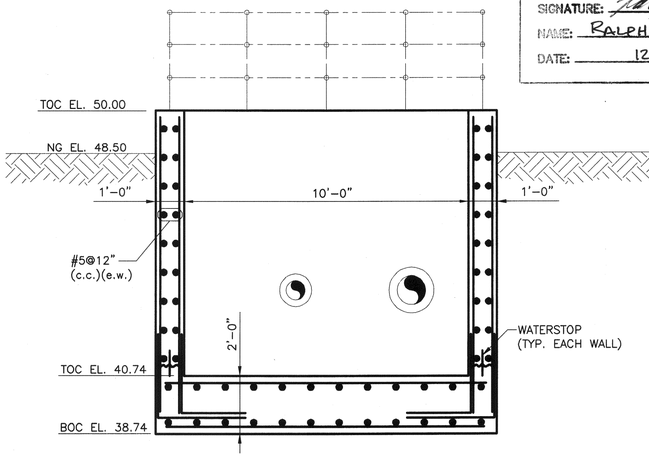

SECTION C
SCALE: 3/8"=1'-0"

NOTE:

1. SEE DETAIL 241 ON DWG NO. D-104 FOR CONCRETE WALL PIPE PENETRATION DETAIL.

RECORD DRAWING

THE CONSTRUCTION CONTRACTOR RECORDED CHANGES MADE DURING CONSTRUCTION ON PRINTS OF THE CONTRACT DRAWINGS.

KLOTZ ASSOCIATES, INC. HAS CREATED THIS RECORD DRAWING BY POSTING THE INFORMATION SUBMITTED BY THE CONTRACTOR ON THE ORIGINALS OF THE CONTRACT DRAWINGS. ATTESTED BY:

SIGNATURE:
NAME: RALPH E. COX, P.E.
DATE: 12/02/11

No.	Date	Revisions	App.

STATE OF TEXAS
JOE FRANK POTTER
36347
REGISTERED PROFESSIONAL ENGINEER
02/11/05

klotz associates

Binkley & Barfield consulting engineers
1710 Seamist Drive
Houston, Texas 77008-3189
(713) 869-3433

SURVEYED BY: GEOSOLUTIONS FIELD BOOK NO. : N/A

CITY OF HOUSTON
DEPARTMENT OF PUBLIC WORKS AND ENGINEERING

ALMEDA SIMS WWTP & SPF IMPROVEMENTS PACKAGE I

SLUDGE HOLDING TANK STRUCTURAL SECTIONS

FILE NO:	WW4903
WBS:	000298-0004-4
DRAWING SCALE	
AS SHOWN	
CITY OF HOUSTON PM	
IRAJ RANJBAR, P.E.	
DWG NO. :	S-402
SHEET NO.	77 OF 109

PUBLIC WORKS AND ENGINEERING
ACCEPTED & FILED
44488
CITY DRAWING NUMBER
HOUSTON, TEXAS

COLOR TABLE:

ORIGINAL SCALE IN INCHES FOR REDUCED PLANS
0 1 2 3

J:\0620.002.000\07.00 CADD\Package 1\Structural\Prop SBB Layout.dwg Feb 11,2008 - 8:21am lewiss

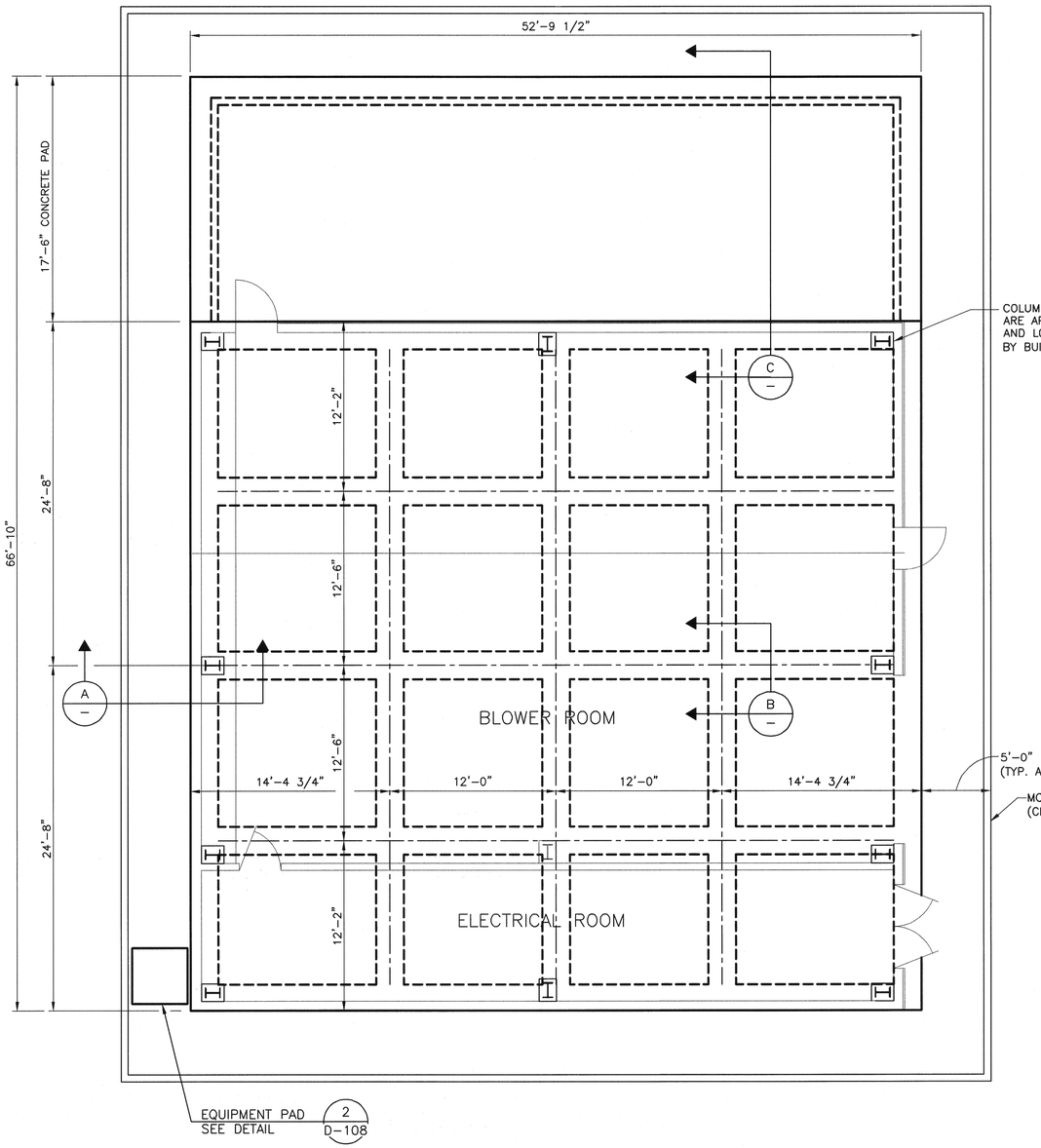

FOUNDATION PLAN
SCALE: 3/16"=1'-0"

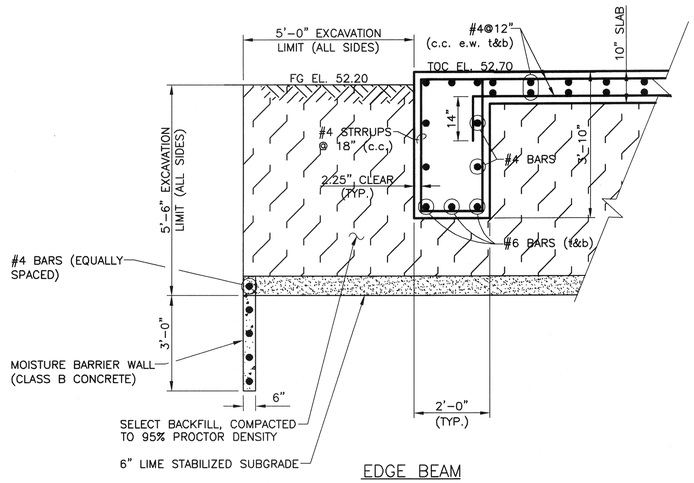

EDGE BEAM

NOTE:

1. INITIAL CONSTRUCTION OF BLOWER BUILDING SHALL INCLUDE 5'-6" OF VERTICAL AND 5'-0" HORIZONTAL (ENTIRE PERIMETER OF PROPOSED BUILDING) EXCAVATION. INSTALL 6" LIME STABILIZED SUBGRADE BEFORE FILLING WITH SELECT FILL TO FINISH GRADE AT ELEVATION 52.20.

SECTION A
SCALE: 1/2"=1'-0"

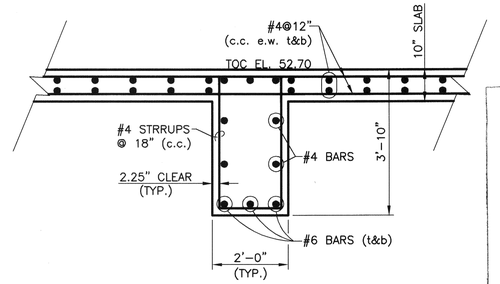

INTERIOR BEAMS

SECTION B
SCALE: 1/2"=1'-0"

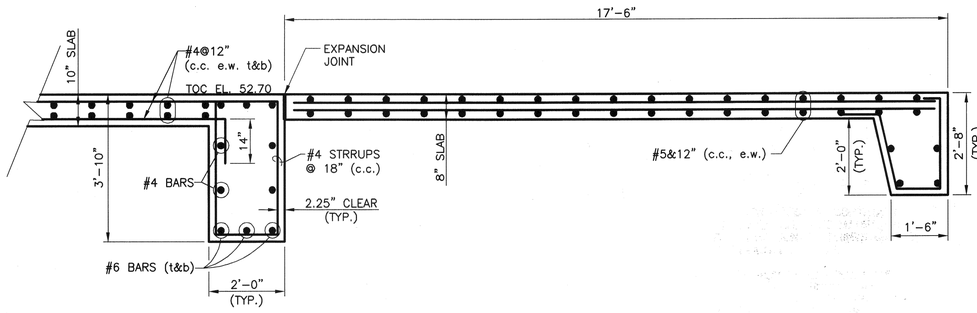

SECTION C
SCALE: 1/2"=1'-0"

NOTE:

1. REFERENCE DWGS. M-700 & M-701 FOR FLOOR SLOPES, FLOOR DRAIN CONFIGURATION, AND BUILDING SECTIONS AND ELEVATIONS.

RECORD DRAWING

THE CONSTRUCTION CONTRACTOR RECORDED CHANGES MADE DURING CONSTRUCTION ON PRINTS OF THE CONTRACT DRAWINGS.

KLOTZ ASSOCIATES, INC. HAS CREATED THIS RECORD DRAWING BY POSTING THE INFORMATION SUBMITTED BY THE CONTRACTOR ON THE ORIGINALS OF THE CONTRACT DRAWINGS. ATTESTED BY:

SIGNATURE:
NAME: RALPH E. COX, P.E.
DATE: 12/02/11

No.	Date	Revisions	App.

STATE OF TEXAS
JOE FRANK POTTER
36347
REGISTERED
PROFESSIONAL ENGINEER
02/11/08

klotz associates

Binkley & Barfield
consulting engineers
1710 Seamist Drive
Houston, Texas 77008-3189
(713) 869-3433

SURVEYED BY: GEOSOLUTIONS | FIELD BOOK NO. : N/A

CITY OF HOUSTON
DEPARTMENT OF PUBLIC WORKS AND ENGINEERING

ALMEDA SIMS WWTP & SPF IMPROVEMENTS PACKAGE I

BLOWER BUILDING FOUNDATION PLAN AND SECTIONS

FILE NO:	WW4903
WBS:	000298-0004-4
DRAWING SCALE	AS SHOWN
CITY OF HOUSTON PM	IRAJ RANJBAR, P.E.
DWG NO. :	S-500
SHEET NO.	78 OF 109

PUBLIC WORKS AND ENGINEERING
ACCEPTED & FILED
44488
CITY DRAWING NUMBER
HOUSTON, TEXAS

COLOR TABLE:

ORIGINAL SCALE IN INCHES FOR REDUCED PLANS
0 1 2 3

J:\0620.002.000\07.00 CADD\Package 1\Structural\Prop SST pump Station.dwg Feb 11,2008 - 8:26am lewiss

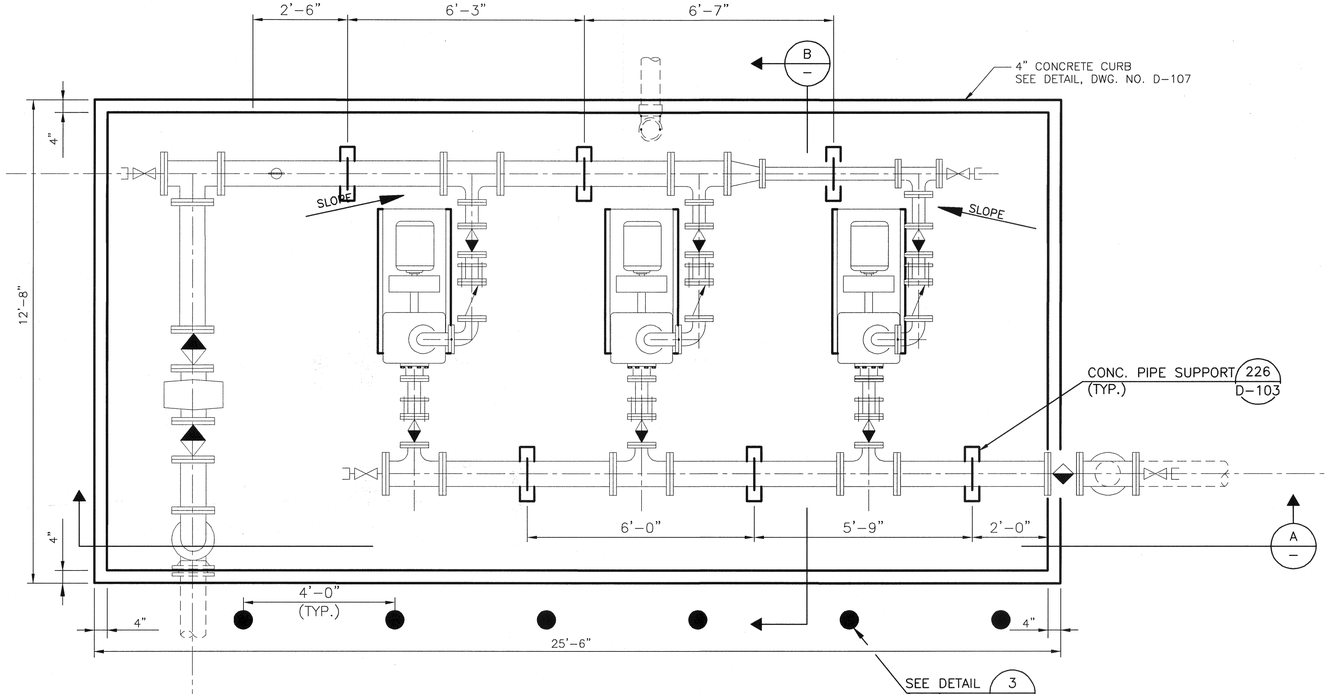

PLAN
SCALE: 1/2"=1'-0"

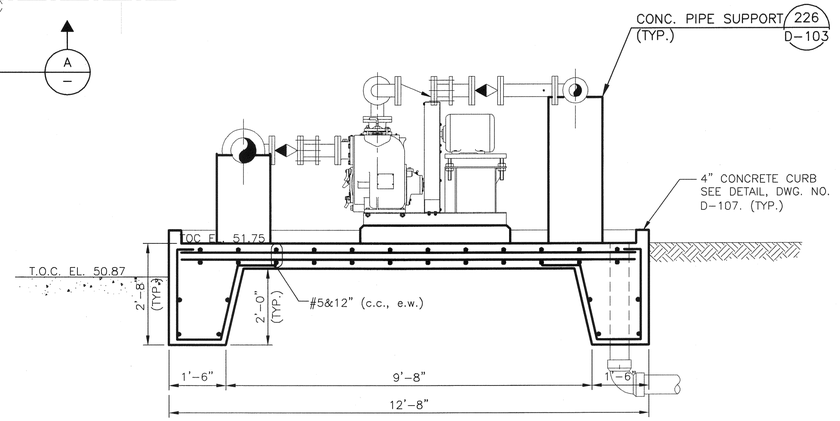

SECTION B
SCALE: 1/2"=1'-0"

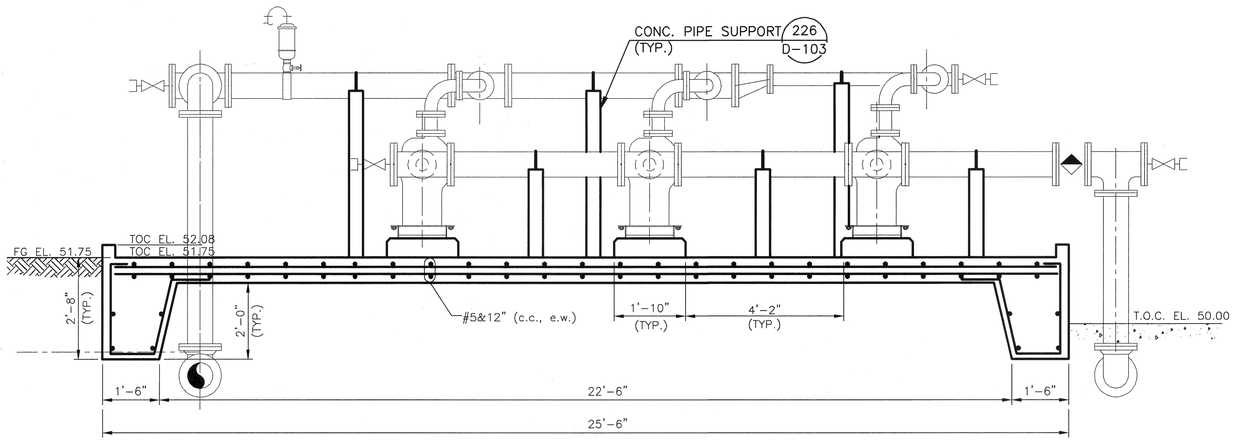

SECTION A
SCALE: 1/2"=1'-0"

COLOR TABLE:

ORIGINAL SCALE IN INCHES FOR REDUCED PLANS
0 1 2 3

RECORD DRAWING

THE CONSTRUCTION CONTRACTOR RECORDED CHANGES MADE DURING CONSTRUCTION ON PRINTS OF THE CONTRACT DRAWINGS.

KLOTZ ASSOCIATES, INC. HAS CREATED THIS RECORD DRAWING BY POSTING THE INFORMATION SUBMITTED BY THE CONTRACTOR ON THE ORIGINALS OF THE CONTRACT DRAWINGS. ATTESTED BY:

SIGNATURE: _____
NAME: Ralph E. Cox, P.E.
DATE: 12/02/11

No.	Date	Revisions	App.

STATE OF TEXAS
JOE FRANK POTTER
36347
REGISTERED
PROFESSIONAL ENGINEER
12/11/08

klotz associates

Binkley & Barfield
consulting engineers
1710 Seamist Drive
Houston, Texas 77008-3189
(713) 869-3433

SURVEYED BY: GEOSOLUTIONS | FIELD BOOK NO. : N/A

CITY OF HOUSTON
DEPARTMENT OF PUBLIC WORKS AND ENGINEERING

ALMEDA SIMS WWTP & SPF IMPROVEMENTS PACKAGE I

SLUDGE TRANSFER PUMP STATION STRUCTURAL PLAN AND SECTIONS

FILE NO:	WW4903
WBS:	000298-0004-4
DRAWING SCALE	AS SHOWN
CITY OF HOUSTON PM	IRAJ RANJBAR, P.E.
DWG NO. :	S-600
SHEET NO.	79 OF 109

PUBLIC WORKS AND ENGINEERING
ACCEPTED & FILED
44488
CITY DRAWING NUMBER
HOUSTON, TEXAS

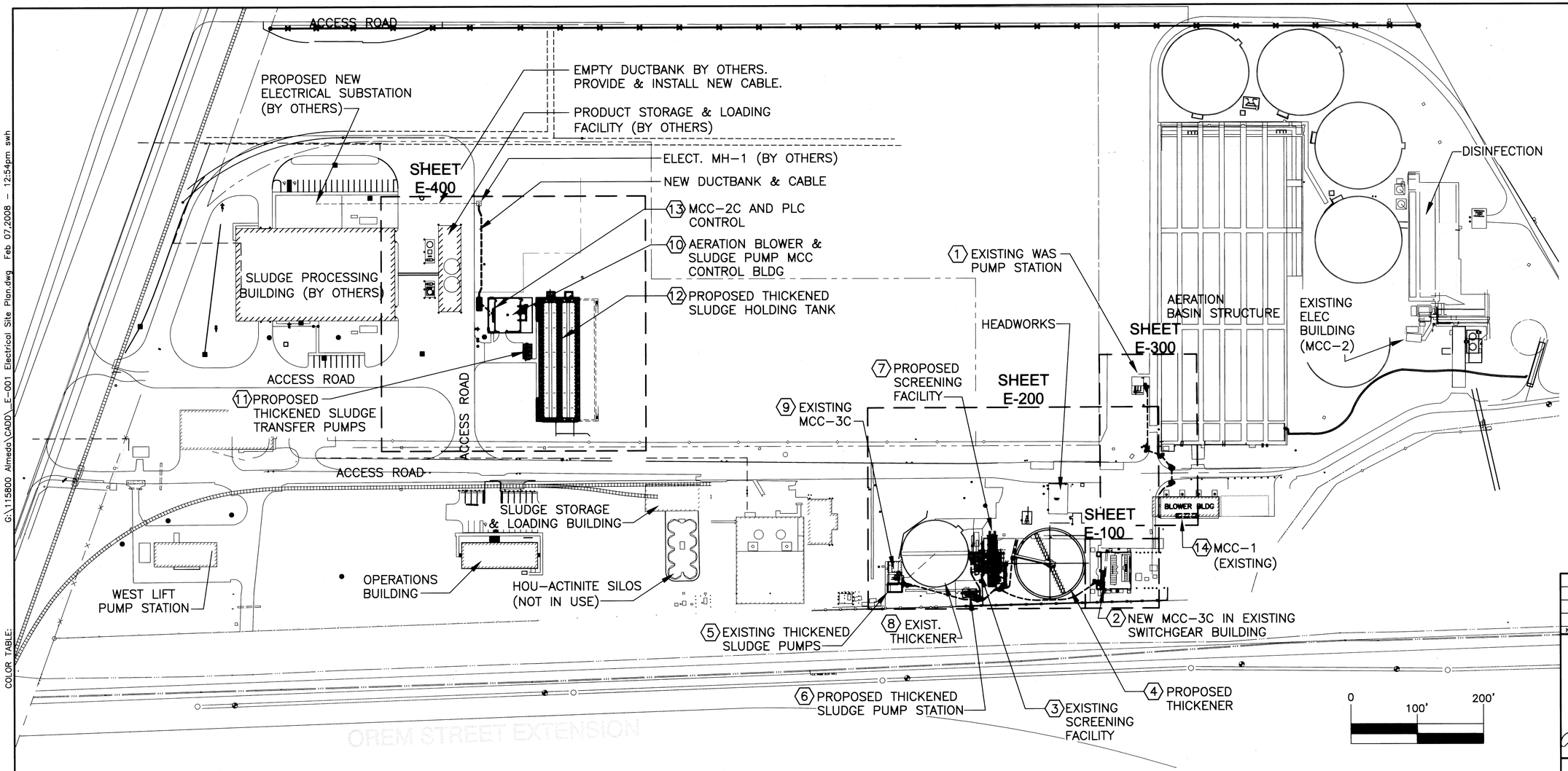

G:\115800 Almeda\CADD_E-001 Electrical Site Plan.dwg Feb 07,2008 - 12:54pm swh

COLOR TABLE:

ORIGINAL SCALE IN INCHES FOR REDUCED PLANS
0 1 2 3

KEYED NOTES:

1. REMOVE THREE EXISTING 15 HP WASTE ACTIVATED SLUDGE PUMPS (WAS), AND INSTALL THREE NEW 25 HP PUMPS (2 DUTY & 1 STANDBY) WITH NEW ELECTRICALS AND CONTROLS. NEW (WAS) PUMPS WILL BE FED FROM MCC-1 LOCATED IN THE BLOWER BUILDING.
2. NEW MCC-3C TO PROVIDE POWER AND CONTROLS FOR NEW TWAS PUMPS, THICKENER, AND SCREENING FACILITY. PROVIDE BUCKETS, CIRCUIT BREAKERS AND CONDUITS FOR FUTURE CONNECTION OF EXISTING THICKENER, TWAS PUMPS AND POWER TO OLD MCC-3C BUILDING.
3. EXISTING SCREENING FACILITY TO REMAIN IN SERVICE. CONTINUE OPERATING FROM EXISTING ELECTRICAL AND CONTROL SYSTEMS.
4. INSTALL A NEW THICKENER (1 HP DRIVE MOTOR) WITH CONTROLS
5. THREE EXISTING 20 HP THICKENED WASTE ACTIVATED SLUDGE (TWAS) PUMPS TO REMAIN IN SERVICE. CONTINUE OPERATING FROM EXISTING ELECTRICAL AND CONTROL SYSTEMS.
6. INSTALL THREE NEW 20 HP THICKENED WASTE ACTIVATED SLUDGE (TWAS) PUMPS (2 DUTY & 1 STANDBY) WITH CONTROLS FOR THE NEW THICKENER
7. INSTALL TWO NEW SLUDGE SCREENS (1 HP MOTORS), AND ONE WASTE SOLID CONVEYOR (1 HP MOTOR).
8. EXISTING THICKENER TO REMAIN IN SERVICE. CONTINUE OPERATING FROM EXISTING ELECTRICAL AND CONTROL SYSTEMS.

KEYED NOTES CON'T:

9. EXISTING MCC-3C TO REMAIN IN SERVICE.
10. INSTALL THREE NEW 125 HP BLOWERS EACH WITH VARIABLE FREQUENCY DRIVE (VFD) CONTROL (2 DUTY AND 1 BACKUP). PROVIDE AND INSTALL A 4TH VFD IN PACKAGE I, FOR A 4TH BLOWER WHICH IS TO BE INSTALLED IN PACKAGE II.
11. INSTALL THREE NEW 10 HP THICKENED SLUDGE TRANSFER PUMPS (2 DUTY & 1 STANDBY).
12. INSTALL FOUR 1 HP MOTORIZED AIR HEADER CONTROL VALVES, INSTALL TWO 1 HP MOTORIZED SLUDGE INLET CONTROL VALVES, INSTALL FOUR 1 HP SLUDGE DISCHARGE LINE CONTROL VALVES, INSTALL FOUR 1 HP BLOWER DISCHARGE CONTROL VALVE, INSTALL FOUR 1 HP SPRAY VALVES. PROVIDE AND INSTALL CONTROL SYSTEM FROM NEW BLOWER/MCC BUILDING TO OPERATE VALVES.
13. INSTALL NEW MCC-2C FOR THE PROPOSED SLUDGE HOLDING TANKS INCLUDING BLOWERS, AERATION CONTROL VALVES, SLUDGE TRANSFER PUMPS AND ALL THE SLUDGE CONTROL GATES AND VALVES. INSTALL NEW PLC PANEL FOR SLUDGE HOLDING TANK OPERATIONS, FURNISH HVAC, LIGHTING AND FANS FOR THE NEW BUILDING.
14. MCC-1 (EXISTING) IN BLOWER BUILDING. MODIFY AS NOTED IN MCC-1 DRAWINGS TO SUPPORT LARGER WAS PUMPS.

GENERAL NOTES

1. MCC-2C FOR THE NEW SLUDGE HOLDING TANK OPERATION WILL BE FED FROM THE POWER DISTRIBUTION SYSTEM OF THE NEW SLUDGE PROCESSING BUILDING.
2. FACILITIES AND/OR EQUIPMENT DENOTED BY OTHERS ARE TO BE PROVIDED BY OTHERS UNDER A SEPARATE CONTRACT.

AS BUILT

No.	Date	Revisions	App.

STATE OF TEXAS
LARRY M. BARFIELD
39337
REGISTERED PROFESSIONAL ENGINEER
2-8-08

klotz associates

Binkley & Barfield consulting engineers
1710 Seamist Drive
Houston, Texas 77008-3189
(713) 869-3433

SURVEYED BY: GEOSOLUTIONS | FIELD BOOK NO. : N/A

CITY OF HOUSTON
DEPARTMENT OF PUBLIC WORKS AND ENGINEERING

ALMEDA SIMS WWTP & SPF IMPROVEMENTS PACKAGE I

ELECTRICAL SITE PLAN OVERALL

FILE NO:	WW4903
WBS: R-000298-0004-4	
DRAWING SCALE	
AS NOTED	
CITY OF HOUSTON PM	
IRAJ RANJBAR, P.E.	
DWG NO. :	E-001
SHEET NO. 80 OF 109	

PUBLIC WORKS AND ENGINEERING ACCEPTED & FILED
44488
CITY DRAWING NUMBER
HOUSTON, TEXAS

G:\115800 Almeda\CADD_E-002 Electrical Legends & Symbols.dwg Feb 07,2008 - 12:54pm swh

COLOR TABLE:

ORIGINAL SCALE IN INCHES
FOR REDUCED PLANS
0 1 2 3

DRAWING TYPE / DESCRIPTION

SINGLE LINE	CONTROL SCHEMATIC	PLAN	DESCRIPTION
52 CS			MEDIUM VOLTAGE DRAWOUT POWER CIRCUIT BREAKER CS=CONTROL SWITCH
FRAME / TRIP		CB	LOW VOLTAGE AIR CIRCUIT OR MOLDED CASE BREAKER, 3 POLE UNLESS OTHERWISE NOTED
TRIP *		*	COMBINATION MAGNETIC MOTOR STARTER, FULL VOLTAGE NON-REVERSING UNLESS NOTED OTHERWISE: * FVR – FULL VOLTAGE REVERSING RVNR – REDUCED VOLTAGE NON-REVERSING 2S1W – TWO SPEED, ONE WINDING 2S2W – TWO SPEED, TWO WINDING * SIZE OF STARTER
*		*	NON-FUSIBLE DISCONNECT SWITCH, 600 VOLT, 3 POLE. * AMPERE RATING NOTED IF OTHER THAN 30A
*		F *	FUSIBLE DISCONNECT SWITCH 600 VOLT, 3 POLE. AMPERE RATING AND FUZE SIZE AS NOTED * AMPERE RATING NOTED IF OTHER THAN 30A * FUSE RATING EXAMPLE 15
		P 2	MANUAL MOTOR STARTER WITH THERMAL OVERLOAD HEATER. "P" INDICATES WITH PILOT LIGHT, "2" INDICATES 2 POLE
			DRAWOUT TYPE EQUIPMENT OR DEVICE
			MEDIUM VOLTAGE CABLE TERMINATION
			MEDIUM VOLTAGE AIR INTERRUPTER SWITCH
			MEDIUM VOLTAGE FUSED AIR INTERRUPTER SWITCH
			MEDIUM VOLTAGE FUSED MOTOR CONTROLLER
XMFR ** 480 Δ TO 120/208 Y 30 KVA		T XMFR -**	TRANSFORMER, RATING AND CONNECTIONS AS NOTED ** TRANSFORMER IDENTIFICATION NUMBER
* A TO 5			CURRENT TRANSFORMER * QUANTITY; A = PRIMARY AMPERES
* V TO 120			POTENTIAL TRANSFORMER * QUANTITY; V = PRIMARY VOLTAGE
Y		G	GENERATOR, RATINGS CONNECTIONS AS NOTED
100A ATS-1 N S			AUTOMATIC TRANSFER SWITCH #1 (ATS 1) "N" INDICATES NORMAL SOURCE. "S" INDICATES STANDBY SOURCE. 100A INDICATES CONTINUOUS CURRENT RATING.
*		*	VARIABLE SPEED DRIVE CONTROLLER * D.C. = D.C. DRIVE CONTROLLER SCR = SILICON CONTROLLED RECTIFIER VFD = VARIABLE FREQUENCY DRIVE
5KW		H	UNIT HEATER – ELECTRIC HEATING COIL AND FAN
MOV		MOV	MOTOR OPERATED VALVE
5		M	MOTOR, NUMERAL INDICATES HORSEPOWER
VS VM *			VOLTMETER WITH SWITCH, 3 PHASE * RANGE AS NOTED, EXAMPLE 0–600V
AS AM *			AMMETER WITH SWITCH, 3 PHASE * RANGE AS NOTED, EXAMPLE 0–800A
*			METER * WM – WATTMETER WHM – WATTHOUR METER WHDM – WATTHOUR DEMAND METER WHDR – WATTHOUR DEMAND RECORDER PF – POWER FACTOR METER RT – RUNNING TIME METER
			TRANSDUCER * AX – CURRENT TRANSDUCER WX – WATT TRANSDUCER
*			SPECIAL CAPACITOR – * REPRESENTS: "SC"= SURGE CAPACITOR "PF"= POWER FACTOR CORRECTION CAPACITOR
*		*	RELAY, NO. AS INDICATED 27 – UNDERVOLTAGE RELAY 38 – BEARING PROTECTIVE DEVICE 40 – LOSS OF EXCITATION RELAY 42 – RUNNING CONTACTOR / PILOT RELAY 46 – REVERSE PHASE, / PHASE BALANCE, CURRENT RELAY 47 – PHASE SEQUENCE VOLTAGE RELAY 49 – MACHINE OR TRANSFORMER THERMAL RELAY 50 – INSTANTANEOUS OVERCURRENT RELAY 51 – TIME OVERCURRENT RELAY 51G – TIME OVERCURRENT RELAY, GROUNDING RESISTOR TYPE 51N – TIME OVERCURRENT RELAY, RESIDUAL TYPE 51V – TIME OVERCURRENT RELAY W/ VOLTAGE RESTRAINT 60 – NEGATIVE SEQUENCE VOLTAGE RELAY 62 – TIME DELAY RELAY 63 – OVERPRESSURE RELAY 86 – LOCKING–OUT RELAY 87 – DIFFERENTIAL PROTECTIVE RELAY B – SUFFIX INDICATES "BUS" G – SUFFIX INDICATES "GENERATOR" T – SUFFIX INDICATES "TRANSFORMER" X – SUFFIX INDICATES "AUXILIARY"

SINGLE LINE	CONTROL SCHEMATIC	PLAN	DESCRIPTION
		PB	PUSHBUTTON, CONTROL STATION OR SELECTOR SWITCH REFER TO SCHEMATIC FOR TYPE AND SIZE OF STATION
		PB	PUSHBUTTON, MOMENTARY CONTACT, SPRING RETURN NORMALLY CLOSED
		PB	PUSHBUTTON, MOMENTARY CONTACT, SPRING RETURN NORMALLY OPEN
		PB	EMERGENCY STOP PUSHBUTTON WITH RED MUSHROOM HEAD OPERATOR (MAINTAINED CONTACT)
	STOP START	PB	START–STOP PUSHBUTTON CONTROL STATION (MOMENTARY CONTACT)
	STOP START	PB	START–STOP PUSHBUTTON CONTROL STATION, MAINTAINED CONTACT WITH LOCKOUT DEVICE ON STOP
	OFF ON	PB	OFF/ON SELECTOR SWITCH
	L R (XO) (OX)	PB	LOCAL/REMOTE SELECTOR SWITCH
	A B C (XOO) (OOX)	PB	THREE POSITION SELECTOR SWITCH, MAINTAINED CONTACT O–OPEN X–CLOSED

POSITION	TOP CONTACT	BOTTOM CONTACT
A	X	X
B	O	O
C	O	O

		**	* NAMEPLATE (A/B/C) HOA – HAND/OFF/AUTO HOR – HAND/OFF/REMOTE LOR – LOCAL/OFF/REMOTE RSL – RAISE/STOP/LOWER TOA – TEST/OFF/AUTO ** = EQUIPMENT IDENTIFICATION
		NEMA #	ALL PANELS, STARTERS, DISCONNECT, ETC., WITHIN THE ROOM NOTED TO HAVE ENCLOSURES W/ NEMA TYPE # ENCLOSURES (EXCEPT AS SPECIFICALLY NOTED) AS A MINIMUM. MORE STRINGENT REQUIREMENTS MAY BE REQUIRED BY THE SPECIFICATIONS FOR SPECIFIC PIECES OF EQUIPMENT
	M		MOTOR STARTER COIL, NUMBER AS INDICATED
	CR		CONTROL RELAY COIL, NUMBER AS INDICATED
	*		PILOT LIGHT, COLOR AS NOTED * R – RED B – BLUE A – AMBER G – GREEN W – WHITE
	TDE OR TDD R=* S=*		TIME DELAY RELAY * = RANGE AS NOTED * = SETPOINT AS NOTED TDE – TIME DELAY AFTER ENERGIZATION – ON DELAY TDD – TIME DELAY AFTER DE_ENERGIZATION – OFF DELAY
	PTT OR *		PILOT LIGHT, PUSH TO TEST TYPE * COLOR AS NOTED ABOVE
			NOTC –NORMALLY OPEN, TIMED CLOSING WHEN ENERGIZED
			NCTO –NORMALLY CLOSED, TIMED OPENING WHEN ENERGIZED
			NOTO –NORMALLY OPEN, TIMED OPENING WHEN DE–ENERGIZED
	RT OR		NCTC –NORMALLY CLOSED, TIMED CLOSING WHEN DE–ENERGIZED
			RUNNING TIME METER
			CONDUCTORS OR CONDUITS CROSSING PATHS BUT NOT CONNECTED
			CONDUCTORS ELECTRICALLY CONNECTED
		SV	SOLENOID OPERATED VALVE
		HTR	STRIP HEATER OR HEATING ELEMENT
			RESISTOR
			DIODE
			CONTACT, NORMALLY OPEN (NO)
			CONTACT, NORMALLY CLOSED (NC)
			OVERLOAD RELAY HEATER

SINGLE LINE	CONTROL SCHEMATIC	PLAN	DESCRIPTION
	RTD	RTD	RESISTANCE TEMPERATURE DETECTOR
		* – # OR *	FIELD INSTRUMENT, TAG NO. AS INDICATED * – INDICATES INSTRUMENT TYPE DEFINED ON LOOP SHEETS # – INDICATES LOOP NO.
		PS OR	PRESSURE OR VACUUM SWITCH NORMALLY OPEN, CLOSES ON RISING PRESSURE NORMALLY OPEN, CLOSES ON DROPPING PRESSURE NORMALLY CLOSED, OPENS ON RISING PRESSURE NORMALLY CLOSED, OPENS ON DROPPING PRESSURE
		TS OR OR T	TEMPERATURE SWITCH OR THERMOSTAT NORMALLY OPEN, CLOSES ON RISING TEMPERATURE NORMALLY OPEN, CLOSES ON DROPPING TEMPERATURE NORMALLY CLOSED, OPENS ON RISING TEMPERATURE NORMALLY CLOSED, OPENS ON DROPPING TEMPERATURE
		FS OR	FLOW SWITCH (AIR, WATER, ETC.) NORMALLY OPEN, CLOSES ON INCREASED FLOW NORMALLY CLOSED, OPENS ON INCREASED FLOW
		ZS OR	POSITION (LIMIT) SWITCH NORMALLY OPEN NORMALLY OPEN – HELD CLOSED NORMALLY CLOSED NORMALLY CLOSED – HELD OPEN
		WS OR	TORQUE SWITCH NORMALLY CLOSED, OPENS ON HIGH TORQUE
		LS OR	LIQUID LEVEL (FLOAT) SWITCH NORMALLY OPEN, CLOSES ON RISING LEVEL NORMALLY CLOSED, OPENS ON RISING LEVEL

		#	UTILIZED IN CONJUNCTION WITH OTHER CONTROL SCHEMATIC SYMBOLS TO DEPICT THE PHYSICAL LOCATION OF THE DEVICE
			# REPRESENTS
			1 = DEVICE IN FIELD
			2 = DEVICE AT MCC

			LIGHTNING ARRESTER
			GROUND OR GROUND ROD
			EXISTING GROUND WELL
			EXISTING GROUND WIRE CONNECTION (EXOTHERMIC WELD)
			PROPOSED GROUND WELL
			PROPOSED GROUND WIRE CONNECTION (EXOTHERMIC WELD)
			PROPOSED GROUND WIRE CONNECTION (MECHANICAL LUG OR FITTING)
			SUPPORT COLUMN WITH REBAR CAGE
			GROUND WIRE
30A			FUSE, AMPERE RATING AS NOTED.
K			KEY INTERLOCK
TB			TERMINAL OR TEST BLOCK
			MECHANICAL CONNECTION OR INTERLOCK
			CONDUIT TURNING UP
			CONDUIT TURNING DOWN
			CONDUIT STUBBED OUT AND CAPPED
			CONDUIT RUN EXPOSED, (3#12, 1#12G, 3/4"C UNLESS OTHERWISE NOTED)
			CONDUIT RUN CONCEALED
			FLEXIBLE METAL CONDUIT "WHIP" (3#12, 1#12G, 3/4"C UNLESS OTHERWISE NOTED) FOR RECESSED LIGHTING FIXTURES AND LIQUID TITE MOTOR CONNECTIONS
LA–1			SINGLE HOMERUN TO PANEL WITH CIRCUIT NUMBER AS INDICATED
LA–1,3,5			MULTIPLE OR 3 PHASE CIRCUIT TO PANEL IN SAME CONDUIT, WITH CIRCUIT NUMBERS AS INDICATED
		**	** = CONDUIT AND CABLE CALLOUT

SINGLE LINE	CONTROL SCHEMATIC	PLAN	DESCRIPTION
			MEDIUM VOLTAGE MANHOLE
		P	POWER PULL BOX OR HAND HOLE
		S	SCADA PULL BOX OR HAND HOLE
		C	CONTROL PULL BOX OR HAND HOLE
		J OR J	JUNCTION BOX
		TM	TELEPHONE CABINET OR BACKBOARD AS NOTED
		A	INCANDESCENT, OR H.I.D. TYPE LIGHTING FIXTURE, "A" INDICATES FIXTURE TYPE,
		A	FLUORESCENT LIGHTING FIXTURE, NOTATIONS SAME AS ABOVE
		A	WALL OUTLET AND INCANDESCENT, OR H.I.D. LIGHTING FIXTURE, NOTATIONS SAME AS ABOVE
		A	WALL MOUNTED EXIT LIGHT (WITH OR WITHOUT DIRECTIONAL ARROWS AS INDICATED)
		A	CEILING MOUNTED EXIT LIGHT (WITH OR WITHOUT DIRECTIONAL ARROWS AS INDICATED)
			LETTERS INDICATE TYPE OF FIXTURE
		$ b	SINGLE POLE SWITCH, "b" – LETTER "b" INDICATES SWITCHLEG SHALL CONTROL LIGHT FIXTURES WITH "b" DESIGNATION
		$ 2 a	DOUBLE POLE SWITCH, "a" – LETTER "a" INDICATES SWITCHLEG SHALL CONROL LIGHT FIXTURES WITH "a" DESIGNATION
		$ 3 c	THREE WAY SWITCH, "c" – LETTER "c" INDICATES SWITCHLEG SHALL CONTROL LIGHT FIXTURES WITH "c" DESIGNATION
		$ 4 a	DOUBLE POLE SWITCH, "a" – LETTER "a" INDICATES SWITCHLEG SHALL CONTROL LIGHT FIXTURES WITH "a" DESIGNATION
		$ M	MOMENTARY CONTACT SWITCH, CENTER OFF
		$ P	SINGLE POLE SWITCH AND PILOT LIGHT
		$ OS	OCCUPANCY SENSOR SWITCH
		OS	OCCUPANCY SENSOR – CEILING MOUNTED
DP–**			480V OR 480/277V PANEL
LP–**			120/240V OR 120/208V PANEL
		*	SINGLE RECEPTACLE. CURRENT & VOLTAGE AS NOTED
		*	DUPLEX RECEPTACLE, 20A, 120V, 2P, 3W * C – MOUNTED ABOVE COUNTER TOP GFCI – GROUND FAULT INTERRUPTER TYPE WP – WEATHERPROOF T – TRANSIENT VOLTAGE SURGE SUPPRESSOR IG – ISOLATED GROUND ORANGE DEVICE – ISOLATED GROUND RED DEVICE – EMER GEN CIRCUIT
			SPECIAL RECEPTACLE, SEE RECEPTACLE SCHEDULE
		K	TELEPHONE HANDSET, DESK TYPE, K=KEY SYSTEM
		K	TELEPHONE HANDSET, WALL TYPE, K=KEY SYSTEM
			PAGE/PARTY TELEPHONE HANDSET, DESK TYPE
			PAGE/PARTY TELEPHONE HANDSET, WALL TYPE (MOUNT UP 4'–8")
		S H1.H2 W	PAGING SPEAKER, WALL MOUNTED, "H1, H2" DENOTES HORN TYPE, "W" DENOTES WIDE ANGLE TYPE
		H S	PAGING SPEAKER, BI–DIRECTIONAL, WALL MOUNTED, H = HORN TYPE
		S	PAGING SPEAKER, FLUSH MOUNTED CEILING TYPE
		A	PAGING SPEAKER AMPLIFIER ASSEMBLY
			FLOOR OUTLET BOX WITH TYPE OUTLET INDICATED
			UNDERFLOOR DUCT SYSTEM WITH TYPE OUTLESTS INDICATED
			3–CELL UNDERFLOOR DUCT SYSTEM JUNCTION BOX

AS BUILT

No.	Date	Revisions	App.

STATE OF TEXAS
LARRY M. BARFIELD
39337
REGISTERED
PROFESSIONAL ENGINEER
2-8-08

klotz associates

Binkley & Barfield
consulting engineers
1710 Seamist Drive
Houston, Texas 77008-3189
(713) 869-3433

SURVEYED BY: GEOSOLUTIONS | FIELD BOOK NO. : N/A

CITY OF HOUSTON
DEPARTMENT OF PUBLIC WORKS AND ENGINEERING

ALMEDA SIMS WWTP & SPF IMPROVEMENTS PACKAGE I

ELECTRICAL LEGENDS AND SYMBOLS

FILE NO:	WW4903
WBS:	R–000298–0004–4
DRAWING SCALE	
NTS	
CITY OF HOUSTON PM	
IRAJ RANJBAR, P.E.	
DWG NO. :	E–002
SHEET NO.	81 OF 109

PUBLIC WORKS AND ENGINEERING
ACCEPTED & FILED
44488
CITY DRAWING NUMBER
HOUSTON, TEXAS

G:\115800 Almeda\CADD_E-003 Electrical Notes.dwg Feb 07,2008 - 12:54pm swh

ELECTRICAL PLAN GENERAL NOTES

1. REFER TO SHEET G-101 FOR DRAWING LIST. REFER TO DIV. 13, 14, 15 & 16 SPECIFICATIONS FOR ADDITIONAL INFORMATION AND REQUIREMENTS.
2. REFER TO STRUCTURAL/CIVIL PLANS FOR THE EXACT LOCATION AND ANY ADDITIONAL REQUIREMENTS FOR ALL STRUCTURAL/CIVIL EQUIPMENT.
3. THE ELECTRICAL CONTRACTOR SHALL PROVIDE RING AND BACK BOX FOR DEVICE SUPPORT, WITH PULL LINE TO CEILING AT EACH POSITION INDICATED TO HAVE A DATA AND /OR TELEPHONE OUTLET.
4. REFER TO THE CIVIL PLANS FOR THE FINISHED, EXACT LOCATION, MOUNTING DETAILS AND HEIGHT OF ALL DEVICES. THE DIV. 16 CONTRACTOR SHALL COORDINATE THE LOCATION OF ALL WALL AND CEILING DEVICES, SWITCHES, RECEPTACLES, OUTLETS, AND ACCESS DOORS WITH THE CIVIL ENGINEER PRIOR TO ROUGH-IN.
5. VERIFY ALL EQUIPMENT DIMENSIONS AND STUB UP LOCATIONS PRIOR TO ORDERING OR INSTALLING ANY EQUIPMENT OR STUBBING UP ANY DUCTS.
6. ROTATING EQUIPMENT ROTATION DIRECTION SHALL BE FIELD-VERIFIED FOR ALL ROTATING LOADS PRIOR TO MAKING ANY FINAL CONNECTIONS. ROTATION OF EXISTING EQUIPMENT SHALL BE NOTED PRIOR TO DE-ENERGIZING AND RECONNECTIONS SHALL BE MADE IDENTICALLY TO PREVIOUS EQUIPMENT CONNECTIONS.
7. REFER TO ELECTRICAL SCHEDULES FOR TABLES FOR CONDUIT ASSIGNMENTS TO SPECIFIC EQUIPMENT AND RACK LOCATIONS.
8. ALL DEDICATED RECEPTACLES (CIRCUITS WITH ONE RECEPTACLE PER 20A CIRCUIT) SHALL BE NEMA 5-20R UNLESS OTHERWISE NOTED. (NO 15 AMP CIRCUIT SHALL BE PERMITTED).
9. GENERAL WIRING NOTES:
   - A) UNLESS OTHERWISE NOTED, ALL OUTDOOR AND CONDUITS IN CORROSIVE AREAS SHALL BE PVC COATED RIGID GALVANIZED. INTERIOR EXPOSED CONDUITS IN BUILDINGS AND ELECTRICAL ROOMS SHALL BE RIGID GALVANIZED.
   - B) ALL INDIVIDUAL HOME RUNS INDICATED ON THE DRAWINGS SHALL HAVE INDIVIDUAL PHASE, NEUTRAL, AND GROUND CONDUCTORS BROUGHT BACK TO THE PANELBOARD.
   - C) FOR 20 AMP CIRCUITS, NOT MORE THAN 9-#12AWG CURRENT CARRYING CONDUCTORS SHALL BE INSTALLED IN EACH RACEWAY.
   - D) MULTIWIRE BRANCH CIRCUITS, I.E. COMMON NEUTRAL CONDUCTORS, SHALL NOT BE USED FOR RECEPTACLES IN OFFICES OR AREAS WITH OFFICE OR COMPUTER EQUIPMENT. THESE CIRCUITS SHALL HAVE DEDICATED NEUTRAL CONDUCTORS.
   - E) ALL 120 VOLT, 20 AMP HOME RUNS LONGER THAN 100' AND ALL 277 VOLT, 20 AMP HOME RUNS LONGER THAN 150' SHALL BE #10AWG MINIMUM. THIS SHALL OVERRIDE THE CONDUCTOR SIZE LISTED IN THE PANEL SCHEDULES.
   - F) TYPE AC OR MC CABLE SHALL NOT BE PERMITTED.
   - G) JUNCTION BOXES ABOVE THE CEILING SHALL BE RIGIDLY SUPPORTED FROM THE BUILDING STRUCTURE. BOXES SHALL NOT BE SUPPORTED FROM THE CEILING SUPPORT WIRES.
   - H) EXTERIOR COVER PLATES OF ALL NEW AND EXISTING JUNCTION BOXES SHALL BE CLEARLY MARKED TO INDICATE THE CIRCUIT NUMBER(S) ENCLOSED WITHIN THE JUNCTION BOX.
   - I) ALL CONDUITS CONTAINING CURRENT CARRYING CONDUCTORS SHALL BE SUPPLIED WITH AN EQUIPMENT GROUND WIRE SIZED IN ACCORDANCE WITH THE 2005 N.E.C. AND ALL APPLICABLE CODES. REFER TO THE PANEL SCHEDULES AND DISTRIBUTION DIAGRAM FOR FURTHER SIZING REQUIREMENTS.
   - J) SIZE #12 AWG AND LARGER CONDUCTORS SHALL BE STRANDED COPPER. INSULATION SHALL BE TYPE THHN OR THWN, EXCEPT UNDERGROUND. ALL UNDERGROUND CONDUCTORS SHALL BE TYPE XHHW.
10. HVAC EQUIPMENT CONDUITS SHALL BE ROUTED IN CEILING STRUCTURE. FINAL CONNECTIONS SHALL BE FLEXIBLE CONDUIT, APPROPRIATELY RATED FOR THE APPLICATION. EACH SEGMENT OF FLEXIBLE CONDUIT USED SHALL NOT EXCEED SIX FEET IN LENGTH.
11. ALL WIRE SIZES NOT SPECIFICALLY NOTED ON THE DRAWINGS SHALL BE 2-12 AWG AND 1-12 AWG GROUND.

EQUIPMENT DISPOSAL/RETURN TO OWNER

1. OWNER RESERVES THE RIGHT OF RETURN OF ALL EQUIPMENT REMOVED IN THIS PROJECT TO AN AUTHORIZED STORAGE FACILITY OF HIS CHOICE OR REFUSAL IF EQUIPMENT IS DEEMED NOT RECOVERABLE BY THE OWNER. OWNER SHALL BE CONSULTED PRIOR TO DISPOSAL OF ANY WIRE, CONDUIT, OR OTHER EQUIPMENT REMOVED IN THIS PROJECT.
2. ANY PROPERTY TO BE DISCARDED SHALL BE DISPOSED OF IN AN APPROVED MANNER IN ACCORDANCE WITH ALL APPLICABLE CODES AND REGULATIONS, AT THE COST OF THE CONTRACTOR.

GENERAL LIGHTING NOTES

1. THE MOUNTING HEIGHT AND ARRANGEMENT OF LIGHT FIXTURES MAY REQUIRE ADJUSTMENT DUE TO FIELD CONDITIONS. THE HEIGHT AND LOCATIONS SHALL BE ADJUSTED AS REQUIRED TO ACCOMMODATE CONFLICTS. PROVIDE ADDITIONAL WIRE LENGTHS OF AT LEAST SIX FEET FOR SUCH ADJUSTMENTS.
2. MOUNTING HEIGHTS ARE TO BE EVEN WITH THE LOWEST CEILING STRUCTURAL MEMBER OR LOWEST PIPE, PIPE HANGER, OR HVAC DUCT SO THAT NO DEVICE OR STRUCTURE EXTENDS BELOW THE BOTTOM OF ANY LIGHT FIXTURE.
3. VERIFY ALL LIGHT FIXTURE AND OTHER EQUIPMENT VOLTAGES PRIOR TO ORDERING ANY EQUIPMENT.
4. CONTRACTOR SHALL LIMIT CONSTRUCTION ACTIVITIES TO AVOID CREATION OF EXCESSIVE NOISE OR DUST.
5. CONTRACTOR SHALL PROVIDE ALL NECESSARY SAFETY BARRICADES, LIGHTS, AND FENCE TO PROTECT WORKMEN AND OTHERS AT AL TIMES. PROVIDE SIGNS WHERE NECESSARY TO IDENTIFY HAZARDS OR OTHER SAFETY ALERTS. SEE GENERAL CONSTRUCTION NOTES.
6. CONTRACTOR SHALL MAINTAIN THE WORK SITE IN A NEAT AND CLEAN MANNER AT ALL TIMES.

GENERAL ELECTRICAL NOTES

1. SWITCHBOARDS, TRANSFORMERS AND ANY OTHER FREE STANDING EQUIPMENT SHALL BE SET ON CONCRETE PADS NOT LESS THAN 3" ABOVE FINISHED FLOOR AND EXTEND 6" OUT FROM EQUIPMENT IN ALL DIRECTIONS (INDOORS). EQUIPMENT INSTALLED OUTDOORS SHALL BE ON A PAD AT LEAST 12" ABOVE GRADE AND BASES SHALL EXTEND A MINIMUM OF 24" OUT FROM EQUIPMENT IN ALL DIRECTIONS.
2. 120 VOLT RECEPTACLE CIRCUITS AND 277 VOLT LIGHTING CIRCUITS SHALL BE ROUTED IN SEPARATE RACEWAYS.
3. A GROUNDING CONDUCTOR SHALL BE PROVIDED WITH ALL FEEDERS AND BRANCH CIRCUITS (SIZE BASED ON THE N.E.C.) OR AS INDICATED ON PLANS.
4. ALL BRANCH CIRCUITS CONDUITS SHALL BE ROUTED OVERHEAD. CONDUITS SERVING FLOOR OUTLETS MAY BE ROUTED IN THE SLAB.
5. CONDUIT AND WIRING SHOWN ON DRAWINGS MAY BE COMBINED IN THE SAME RACEWAYS TO REDUCE THE NUMBER OF RACEWAYS TO PANELS AS LONG AS CONDUCTOR AND RACEWAY SIZES ARE IN COMPLIANCE WITH N.E.C. REQUIREMENTS.
6. TRANSFORMERS, INCLUDING UNIT SUBSTATIONS, SHALL BE PROVIDED WITH RESILIENT CUSHION VIBRATION DAMPENERS. ALL SUCH DAMPENERS SHALL BE PROVIDED BY EQUIPMENT MANUFACTURER AND INSTALLED PER MANUFACTURERS' PUBLISHED REQUIREMENTS AND RECOMMENDATIONS.
7. ALL UNDERGROUND RACEWAY CONSTRUCTION SHALL BE IN DUCT BANK PER DETAILS. PROVIDE INTERMEDIATE PULLBOX FOR ALL RUNS GREATER THAN 150 FT.
8. ALL KNOWN EXISTING UNDERGROUND DUCT BANKS AND OTHER CIVIL FEATURES ARE SHOWN ON DRAWINGS. NOT ALL CONSTRUCTION DRAWINGS ARE AVAILABLE, AND AS SUCH, THERE ARE POSSIBLE UNDERGROUND CONFLICTS WHICH ARE NOT SHOWN. THE CONTRACTOR SHALL EXERCISE CAUTION WHEN EXCAVATING AND SHALL HAND DIG AS REQUIRED TO PRESERVE EXISTING DUCTS, CABLES, AND OTHER CIVIL FEATURES. THE CONTRACTOR SHALL NOTIFY THE CITY ENGINEER IN ALL CASES WHERE UNKNOWN UNDERGROUND OBSTACLES ARE DETECTED.
9. WHEN PLANS REQUIRES REUSE OF EXISTING CONDUIT IF IT'S IN GOOD CONDITION, CONTRACTOR SHALL EXAM THE EXISTING CONDUIT BY THE FOLLOWING CRITERIA: PLASTIC COATING UNDAMAGED, NO NICKS OR BREAKS; AND NO RUST IN OR OUTSIDE OF CONDUIT, AND THREADS UNDAMAGED.

LIGHTNING PROTECTION REQUIREMENTS

A LIGHTNING PROTECTION SYSTEM SHALL BE INSTALLED ON THE ROOF OF NEW BUILDINGS AND EQUIPMENT, AND ON BUILDINGS WHERE NEW EQUIPMENT IS BEING INSTALLED. SEE SPECIFICATIONS FOR FURTHER INFORMATION. ALL WORK MUST BE IN COMPLIANCE WITH LIGHTNING PROTECTION SPECIFICATIONS SECTION, NFPA 780, AND INSTALLATION SHALL BE CERTIFIED

MOTOR PROTECTION RELAY SETTINGS

1. CONTRACTOR SHALL PROVIDE MULTILIN RELAY SETTINGS FOR MOTORS AS DESIGNATED AND PERFORM ALL REQUIRED SETTINGS AND PROGRAMMING. WINDING RTD'S SHALL BE SET TO ALARM AT NO HIGHER THAN 140 DEGREE C. (BASED ON 155 DEGREE C. INSULATION SYSTEM) AND TRIP MOTORS AT NO HIGHER THAN 145 DEGREE C. CONTRACTOR SHALL VERIFY THESE SETTINGS WITH MOTOR MANUFACTURER SELECTED AND USE MANUFACTURER'S STANDARD SETTINGS IF DIFFERENT FROM ABOVE.

GENERAL CONSTRUCTION NOTES

1. THESE PLANS DO NOT EXTEND TO OR INCLUDE DESIGNS OR SYSTEMS PERTAINING TO THE SAFETY OF CONSTRUCTION CONTRACTOR OR ITS EMPLOYEES, AGENTS, OF REPRESENTATIVES IN THE PERFORMANCE OF THE WORK. THE SEAL HEREON DOES NOT EXTEND TO ANY SUCH SAFETY SYSTEMS THAT MAY NOW OR HEREAFTER BE INCORPORATED IN THESE PLANS. THE CONSTRUCTION CONTRACTOR SHALL PREPARE OR OBTAIN THE APPROPRIATE SAFETY SYSTEMS, INCLUDING THE PLANS AND SPECIFICATIONS REQUIRED BY THE HOUSE BILLS 662 AND 665 ENACTED BY THE TEXAS LEGISLATURE IN THE 70TH LEGISLATURE - REGULAR SESSION.
2. CONTRACTOR SHALL VERIFY LOCATIONS AND ELEVATIONS PRIOR TO CONSTRUCTION OF PROPOSED FACILITIES.
3. CONTRACTOR'S ACCESS TO THE SITE AND LAYDOWN AREA DESIGNATIONS WILL BE DEFINED AT A FUTURE DATE PRIOR TO CONSTRUCTION. CONTRACTOR ACCESS SHALL REMAIN OPEN TO TRAFFIC FOR THE DURATION OF THE PROJECT, AND ANY DAMAGES CAUSED BY THE CONTRACTOR TO THE ACCESS SHALL BE REPAIRED PRIOR TO COMPLETION OF THE PROJECT.
4. CONTRACTOR TO OBTAIN ALL REQUIRED CONSTRUCTION PERMITS AT HIS EXPENSE PRIOR TO COMMENCEMENT OF WORK.
5. CONTRACTOR STAGING AREA TO BE USED FOR CONTRACTOR'S PERSONNEL, PARKING, MATERIAL, STORAGE, MATERIAL FABRICATION, AND RELATED CONSTRUCTION USES. CONTRACTOR STAGING AREA IS PROVIDED TO CONTRACTOR IN "AS IS" CONDITION. IMPROVEMENTS OR MODIFICATIONS TO BE MADE AT CONTRACTOR'S EXPENSE AND ARE SUBJECT TO OWNER'S APPROVAL. PRIOR TO COMPLETION OF WORK, ALL MATERIALS TO BE REMOVED FROM STAGING AREA AND AREA LEFT CLEAN AND RESTORED TO ORIGINAL CONDITION INCLUDING RESODDING IF REQUIRED.
6. USE THE MANUFACTURER'S CERTIFIED DRAWINGS AND SPECIFICATIONS FOR THE EQUIPMENT ANCHORAGE AND INSTALLATION DETAILS IF AVAILABLE. OTHERWISE, USE ANCHORAGE DRAWINGS AND SPECIFICATIONS CONTAINED HEREIN.
7. PROVIDE EQUIPMENT SLABS FOR EQUIPMENT PER THESE DRAWINGS AND SPECIFICATIONS ONLY.
8. PROVIDE ALL PROJECT COMPONENTS TO SUPPORT, FASTEN, CONNECT AND COMPLETE THE WORK. ALL PROJECT COMPONENTS ARE NOT INDICATED ON DRAWINGS.
9. CONTRACTOR SHALL PROVIDE 72 HOUR WRITTEN NOTICE TO OWNER'S REPRESENTATIVE WHENEVER IT BECOMES NECESSARY FOR THE OWNER TO OPERATE VALVES, PLANT APPURTENANCES OR PLANT EQUIPMENT.
10. CONSTRUCTION METHODS, PROCEDURES, AND SEQUENCES ARE THE CONTRACTOR'S RESPONSIBILITY. CONSTRUCTION SEQUENCE SHALL CONFORM TO SCHEDULE RESTRICTIONS IN THE CONSTRUCTION SCHEDULE PROVIDED. THE CONTRACTOR SHALL TAKE ALL NECESSARY MEANS TO MAINTAIN AND PROTECT THE STRUCTURAL AND OPERATIONAL INTEGRITY OF THE FACILITY DURING ALL STAGES OF CONSTRUCTION.
11. IF REQUIRED, CONTRACTOR SHALL PROVIDE TEMPORARY ELECTRIC POWER AT OWN EXPENSE FOR REQUIRED EQUIPMENT. CONTACT MR. WAYNE WATTS, CENTER POINT ENERGY POWER CONSULTANT, 713-207-3626 FOR PRICE AND AVAILABILITY OF TEMPORARY ELECTRIC POWER PRIOR TO BID.
12. THE LOCATION OF EXISTING UNDERGROUND UTILITIES IS SHOWN IN AN APPROXIMATE WAY ONLY. THE CONTRACTOR SHALL DETERMINE THE EXACT LOCATION OF ALL EXISTING UTILITIES BEFORE COMMENCING WORK. THE CONTRACTOR SHALL PAY FOR AND REPAIR ALL DAMAGES CAUSED BY FAILURE TO EXACTLY LOCATE AND PRESERVE ANY AND ALL UNDERGROUND UTILITIES UNLESS OTHERWISE INDICATED.

SITE WORK NOTES

1. CONTRACTOR TO KEEP MAIN ACCESS ROADS OPEN TO TRAFFIC AT ALL TIMES. CONTRACTOR STAGING AREA USED FOR CONTRACTOR'S PERSONNEL, PARKING, MATERIAL, STORAGE, STOCKPILE, MATERIAL FABRICATION, AND RELATED CONSTRUCTION USES WILL NOT BE ALLOWED TO INTERFERE WITH NORMAL FLOW OF TRAFFIC.
2. COORDINATE ALL PLANT TRAFFIC INTERRUPTIONS INCLUDING ALL STREET CLOSINGS WITH CITY ENGINEER.
3. MAINTAIN DRAINAGE OF SITE DURING ALL PHASES OF CONSTRUCTION. DO NOT BLOCK DRAINAGE FROM ADJACENT AREAS OR ADD FLOW TO ADJACENT AREAS.
4. CONTRACTOR SHALL LIMIT CONSTRUCTION ACTIVITIES TO AVOID CREATION OF EXCESSIVE NOISE OR DUST.
5. CONTRACTOR SHALL PROVIDE ALL NECESSARY SAFETY BARRICADES, LIGHTS, AND FENCE TO PROTECT WORKMEN AND OTHERS AT ALL TIMES. PROVIDE SIGNS WHERE NECESSARY TO IDENTIFY HAZARDS OR OTHER SAFETY ALERTS. SEE GENERAL CONSTRUCTION NOTES.
6. CONTRACTOR SHALL MAINTAIN THE WORK SITE IN A NEAT AND CLEAN MANNER AT ALL TIMES.
7. RESOD OR RESEED ALL DISTURBED AREAS IN ACCORDANCE WITH CITY OF HOUSTON STANDARD SPECIFICATION 02921 AND 02922.

LIGHTING REQUIREMENTS FOR ENERGY CODE COMPLIANCE

1. RECESSED LIGHTING FIXTURES (§502.1.3): RECESSED LIGHTING FIXTURES SHALL BE TYPE IC RATED, MANUFACTURED WITH NO PENETRATIONS BETWEEN THE INSIDE OF THE RECESSED FIXTURE AND CEILING CAVITY AND SEALED TO PREVENT AIR LEAKAGE, OR SHALL BE OF NOT LESS THAN 1" FROM INSTALLED IN A SEALED BOX MAINTAINING THE REQUIRED CLEARANCES COMBUSTIBLE MATERIAL AND NOT LESS THAN 3" FROM INSULATION MATERIAL.
2. CAULKING AND SEALANTS (§502.1.4.2). EXTERIOR JOINTS, SEAMS OR PENETRATIONS IN THE BUILDING ENVELOPE THAT ARE SOURCES OF AIR LEAKAGE, SHALL BE SEALED WITH DURABLE CAULKING MATERIALS, CLOSED GASKETING SYSTEMS, TAPED OR COVERED WITH MOISTURE VAPOR PERMEABLE HOUSE WRAP, THIS INCLUDES SEALING AROUND RECESSED LIGHTS AND ALL ELECTRICAL PENETRATIONS.
3. INTERIOR LIGHTING CONTROLS (§805.2.1). EXCEPT FOR THOSE AREAS LIGHTED FOR SECURITY, EMERGENCY, OR AS A PATH FOR MEANS OF EGRESS, EACH AREA ENCLOSED BY WALLS OR FLOOR TO CEILING PARTITIONS SHALL HAVE AT LEAST ONE MANUAL CONTROL FOR THE LIGHTING SERVING THAT AREA.
4. BI-LEVEL SWITCHING (§805.2.1.1). EACH AREA THAT IS REQUIRED TO HAVE A MANUAL CONTROL SHALL ALSO ALLOW THE OCCUPANT TO REDUCE THE CONNECTED LIGHTING LOAD IN A REASONABLY UNIFORM ILLUMINATION PATTERN AT LEAST 50 PERCENT, EXCEPT IN AREAS WITH ONE 1 LUMINARY, CONTROLLED, BY AN OCCUPANT SENSING DEVICE, CORRIDORS, STOREROOMS, REST ROOMS, OR PUBLIC LOBBIES OR IN GUEST ROOMS.
5. EXTERIOR LIGHTING CONTROLS. AUTOMATIC SWITCHING OR PHOTOCELL CONTROLS SHALL BE PROVIDED FOR ALL EXTERIOR LIGHTING NOT INTENDED FOR 24 HOUR OPERATION. AUTOMATIC TIME SWITCHES SHALL HAVE A COMBINATION SEVEN-DAY AND SEASONAL DAYLIGHT PROGRAM SCHEDULE ADJUSTMENT, AND A MINIMUM FOUR (4) HOUR POWER BACKUP.

GENERAL NOTES - MOUNTING HARDWARE AND EQUIPMENT

1. ALL EQUIPMENT SHALL BE INSTALLED USING MANUFACTURER'S STANDARD MOUNTING HARDWARE, INCLUDING PEDESTALS FOR SECURITY EQUIPMENT. IF SUCH EQUIPMENT IS NOT AVAILABLE OR IS UNSUITABLE FOR THE APPLICATION, FIELD FABRICATED EQUIPMENT IS AUTHORIZED AS LONG AS A SUITABLE SUBMITTAL DETAILING THE FABRICATION IS MADE AND APPROVED BEFORE ANY WORK IS CARRIED OUT. ALL EQUIPMENT SPECIFIED IN THESE DRAWINGS IS CONSIDERED TO BE COMPLETE IN ALL MOUNTING AND INSTALLATION HARDWARE, AND NO ADDITIONAL CHARGES SHALL BE MADE DUE TO INSUFFICIENT HARDWARE FOR MOUNTING OR INSTALLATION.

AS BUILT

No.	Date	Revisions	App.

STATE OF TEXAS
LARRY M. BARFIELD
39337
REGISTERED PROFESSIONAL ENGINEER
2-8-08

klotz associates

Binkley & Barfield consulting engineers
1710 Seamist Drive
Houston, Texas 77008-3189
(713) 869-3433

SURVEYED BY: GEOSOLUTIONS | FIELD BOOK NO. : N/A

CITY OF HOUSTON
DEPARTMENT OF PUBLIC WORKS AND ENGINEERING

ALMEDA SIMS WWTP & SPF IMPROVEMENTS PACKAGE I

ELECTRICAL NOTES

FILE NO:	WW4903
WBS:	R-000298-0004-4
DRAWING SCALE	NTS
CITY OF HOUSTON PM	IRAJ RANJBAR, P.E.
DWG NO. :	E-003
SHEET NO.	82 OF 109

PUBLIC WORKS AND ENGINEERING — ACCEPTED & FILED — 44488 — CITY DRAWING NUMBER — HOUSTON, TEXAS

COLOR TABLE:

ORIGINAL SCALE IN INCHES FOR REDUCED PLANS
0 1 2 3

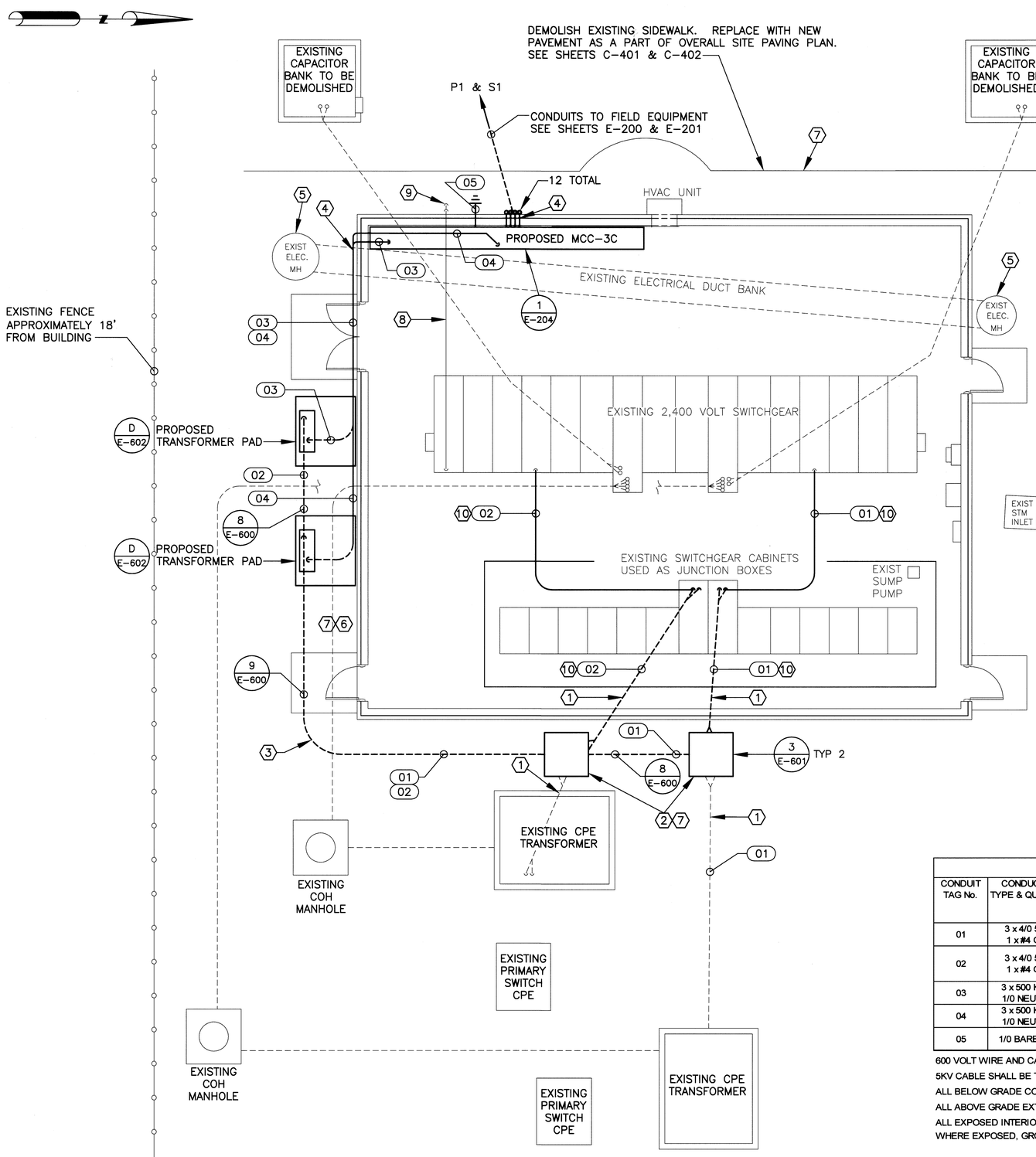

GENERAL NOTES:

1. EXISTING DUCTBANK ROUTING IS SCHEMATIC IN NATURE. TO AVOID DAMAGE THE CONTRACTOR SHALL POT HOLE AND HAND DIG AS NECESSARY TO LOCATE ALL DUCTBANKS AND UNDERGROUND UTILITIES IN THE PROPOSED WORK AREAS.
2. THE CONTRACTOR SHALL UNCOVER THE GROUND BUS AND ANY BONDING JUMPERS IN THE PROPOSED WORK AREAS. ANY DAMAGED CONDUCTORS SHALL BE REPAIRED WITH COPPER JUMPERS, OF MATCHING SIZE, PLACED AROUND THE DAMAGED AREA AND CONNECTED WITH EXOTHERMIC WELDS.
3. PROPOSED CONDUIT AND DUCTBANK ROUTING IS SCHEMATIC IN NATURE. THE CONTRACTOR SHALL ADJUST THE ROUTING TO AVOID UNDERGROUND UTILITIES AND ADJUST THE HEIGHT OF THE PROPOSED CONDUITS TO ASSURE 24" MINIMUM COVER.
4. EXISTING SIDEWALKS, STEPS AND/OR RAMPS ADJACENT TO THE BUILDING MAY BE DEMOLISHED TO FACILITATE THE INSTALLATION OF THE PROPOSED DUCTBANKS, BUT SHALL BE REPLACED IN KIND UPON COMPLETION OF THE UNDERGROUND WORK.
5. CONTRACTOR SHALL DOCUMENT THE LOCATION OF ALL UNDERGROUND CONDUITS AND DUCTBANKS, BOTH 'AS FOUND' AND NEW, ON RED LINE MARKUP DRAWINGS SO THAT THEY CAN BE ACCURATELY SHOWN ON 'AS-BUILT' RECORD DRAWINGS.

KEYED NOTES:

(1) UNCOVER EXISTING EMPTY DUCTBANKS AND BREAK AWAY CONCRETE ENVELOPES.

(2) INSTALL TWO 4' x 4' PULL BOXES PER DETAIL 3, SHEET E-601, WORKING THE EXISTING DUCTBANKS FROM THE CPE TRANSFORMERS INTO THE EAST SIDES OF THE PULL BOXES. CAP AND ABANDON THE ENDS OF THE EXISTING DUCTBANKS ENTERING THE BUILDING. NOTE: THE PULL BOXES MAY BE PRE-CAST OR CAST IN PLACE.

(3) 36" MINIMUM RADIUS SWEEP ELBOWS.

(4) STUB UP CONDUITS ON EXTERIOR WALL. ADJUST CONDUIT AND WALL PENETRATIONS TO ALIGN WITH WIRING COMPARTMENT OF MCC-3C

(5) EXISTING MANHOLE HAS BEEN COVERED WITH ASPHALT. UNCOVER MANHOLE AND INSTALL LOAD BEARING EXTENSION RING TO ELEVATE COVER TO GRADE LEVEL. INCLUDE PAVING REPAIR WITH THE PAVING REPLACEMENT OVER THE NEW DUCTBANKS.

(6) IN THIS VICINITY, WHERE THE TRANSFORMERS AND CONCRETE STEPS PREVENT VEHICULAR TRAFFIC, IF EXISTING DUCTBANKS RESTRICT THE DEPTH OF COVER, IT SHALL BE PERMISSIBLE TO INSTALL NEW CONDUITS ON TOP OF THE EXISTING DUCTBANKS AND COVER THE NEW CONDUITS WITH CONCRETE TO GRADE LEVEL.

(7) DEMOLISH EXISTING PAVEMENT AND/OR SIDEWALK AS REQUIRED IN PROPOSED WORK AREAS. WHEN WORK IS COMPLETED, RESTORE PAVEMENT AND SIDEWALK UP TO THE CONCRETE EQUIPMENT PADS.

(8) EXISTING 1" PVC CONDUIT WITH GROUNDING ELECTRODE CONDUCTOR FROM 2,400 VOLT SWITCHGEAR TO BUILDING GROUND RING. OVERHEAD IN BUILDING, SURFACE MOUNTED ON EXTERIOR WALL AND ACROSS SIDEWALK.

CAUTION: SCHEDULE THE FOLLOWING WORK DURING PLANNED OUTAGES. DO NOT CUT OR DISCONNECT GROUND WIRE WHILE THE MAIN SWITCHGEAR IS ENERGIZED. DO NOT OPEN DOORS OF CAPACITOR BANKS WHILE ENERGIZED.

(9) REWORK CONDUIT AND CONDUCTOR TO BELOW GRADE LEVEL. EXTEND AND RECONNECT CONDUCTOR TO GROUND RING WITH MATCHING CABLE USING EXOTHERMIC WELDS.

(10) IDENTIFY MV SWITCHES CONTAINING DESIGNATED CIRCUITS PER SHEET E-101. PROVIDE AND INSTALL 4" RGS CONDUITS OVERHEAD BETWEEN MV SWITCHES AND EXISTING CABINETS. ROUTE CONDUCTORS FROM TRANSFORMERS THROUGH EXTERIOR HAND HOLES, THROUGH CABINETS AND THEN TO DESIGNATED MV FUSED SWITCHES. COORDINATE OUTAGES WITH WW OPS TO TERMINATE CABLEING.

ALL MEDIUM VOLTAGE SAFETY PRECAUTIONS SHALL BE OBSERVED DURING THE IMPLEMENTATION OF THIS WORK.

(11) PROVIDE PLAQUES ON MV SWITCHES AND TRANSFORMERS AS NOTED BELOW:

PLAQUE FOR MV SWITCH 'A4'

AND
FEEDER TO WEST PADMOUNT TRANSFORMER
SOUTH SIDE OF THIS BUILDING

PLAQUE FOR MV SWITCH 'B4'

AND
FEEDER TO EAST PADMOUNT TRANSFORMER
SOUTH SIDE OF THIS BUILDING

PLAQUE FOR WEST TRANSFORMER

TRANSFORMER FEEDS MCC-3C SECTION 'A'
PRIMARY POWER SOURCE - MV SWITCH 'A4' IN BUILDING

PLAQUE FOR EAST TRANSFORMER

TRANSFORMER FEEDS MCC-3C SECTION 'B'
PRIMARY POWER SOURCE - MV SWITCH 'B4' IN BUILDING

CONDUIT/CABLE SCHEDULE

CONDUIT TAG No.	CONDUCTOR TYPE & QUANTITY	COND SIZE (TYPE PER NOTES)	SYSTEM VOLTAGE	FROM	TO	COMMENTS
01	3 x 4/0 5KV, 1 x #4 GND	4"	2,400	MAIN SWITCHGEAR SECTION "B" CUBICLE "B4"	EAST COH PADMOUNT TRANSFORMER	VIA INTERIOR CABINET & EXTERIOR HAND HOLE
02	3 x 4/0 5KV, 1 x #4 GND	4"	2,400	MAIN SWITCHGEAR SECTION "A" CUBICLE "A4"	WEST COH PADMOUNT TRANSFORMER	VIA INTERIOR CABINET & EXTERIOR HAND HOLE
03	3 x 500 Kcmil, 1/0 NEUTRAL	4"	480/277	WEST COH PADMOUNT TRANSFORMER	MCC-3C SECTION 'A'	
04	3 x 500 Kcmil, 1/0 NEUTRAL	4"	480/277	EAST COH PADMOUNT TRANSFORMER	MCC-3C SECTION 'B'	
05	1/0 BARE GND	1" SCHED 80 PVC	480/277	GROUNDING ELECTRODE SYSTEM	MCC-3C GROUND BUS	GROUNDING ELECTRODE CONDUCTOR

600 VOLT WIRE AND CABLE SHALL BE XHHW-2 STRANDED COPPER.
5KV CABLE SHALL BE TYPE MV-105 WITH EPR INSULATION AND CPE JACKET RATED 133% AT 5KV
ALL BELOW GRADE CONDUIT SHALL BE CONCRETE ENCASED
ALL ABOVE GRADE EXTERIOR CONDUITS SHALL BE PVC COATED RGS
ALL EXPOSED INTERIOR CONDUITS SHALL BE RGS
WHERE EXPOSED, GROUNDING ELECTRODE CONDUCTORS SHALL BE INSTALLED IN SCHEDULE 80 PVC.

AS BUILT

No.	Date	Revisions	App.
1	1/20	Revised Feeder Circuits To XFMRS	
1	1/20	Rerouted Conduits to MCC	
1	1/20	Deleted Capacitor Banks	
2	2/11	Reduced Cable & Fuse Size	

STATE OF TEXAS
LARRY M. BARFIELD
39337
REGISTERED PROFESSIONAL ENGINEER
2-15-10

klotz associates

Binkley & Barfield consulting engineers
1710 Seamist Drive
Houston, Texas 77008-3189
(713) 869-3433

SURVEYED BY: GEOSOLUTIONS | FIELD BOOK NO. : N/A

CITY OF HOUSTON
DEPARTMENT OF PUBLIC WORKS AND ENGINEERING

ALMEDA SIMS WWTP & SPF IMPROVEMENTS PACKAGE I

EXISTING 2.4KV ELECTRICAL SWITCHGEAR BLDG ENLARGED SITE PLAN

FILE NO:	WW4903
WBS:	R-000298-0004-4
DRAWING SCALE	3/16" = 1'-0"
CITY OF HOUSTON PM	IRAJ RANJBAR, P.E.
DWG NO. :	E-100
SHEET NO.	83 OF 109

PUBLIC WORKS AND ENGINEERING ACCEPTED & FILED CITY DRAWING NUMBER HOUSTON, TEXAS

COLOR TABLE:

ORIGINAL SCALE IN INCHES FOR REDUCED PLANS 0 1 2 3

G:\115800 Almeda Sims Package I\CADD\AS BUILT\E-100 SG Bldg Enlarged Site Rev 2, 2-11-10.dwg Nov 03,2011 -

G:\115800 Almeda Sims Package I\CADD\AS BUILT\E-101 SG Bldg One Line Rev 2, 2-11-10.dwg Nov 03,2011 - 9:

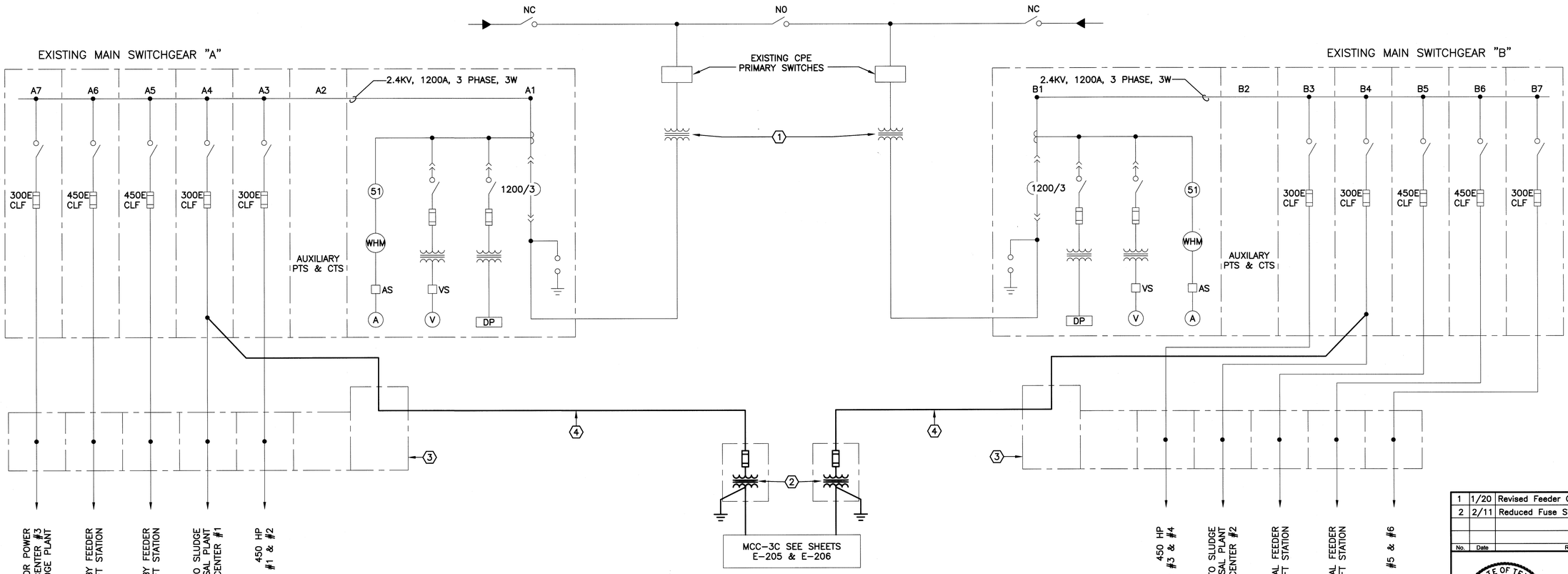

KEYED NOTES:

1. EXISTING CPE PADMOUNT TRANSFORMERS 12.47 KV TO 2.4 KV, 3750 KVA EACH. EMPTY CONDUITS EXIST FROM EACH TRANSFORMER PAD INTO THE OLD SWITCHGEAR CABINETS IN THE ADJACENT BUILDING. THESE ARE TO BE REUSED FOR THE FEEDERS TO THE PROPOSED TRANSFORMERS. SEE SHEET E-100 FOR DETAILS. SEE SPECIFICATIONS SECTION 01110 FOR DETAILED CONSTRUCTION SEQUENCING
2. PROPOSED CITY OF HOUSTON 300KVA PADMOUNT TRANSFORMERS. 2.4 KV TO 480/277 VOLTS. OCP AND LIGHTNING PROTECTION OF PRIMARY LOCATED IN TRANSFORMER. SEE DRAWING E-205 FOR ADDITIONAL DETAILS.
3. ORIGINAL SWITCHGEAR CABINETS CONVERTED TO JUNCTION BOXES.
4. INSTALL CONDUITS FROM HAND HOLES OUTSIDE EAST WALL OF BUILDING TO INDICATED MV FUSED SWITCHES AND CONNECT TO LOAD SIDE OF FUSES AS INDICATED. SEE ENLARGED SITE PLAN, DWG E-100 FOR CONDUIT PATHWAY.

2.4KV ELECTRICAL DISTRIBUTION ONE LINE DIAGRAM

AS BUILT

No.	Date	Revisions	App.
1	1/20	Revised Feeder Circuits To XFMRS	
2	2/11	Reduced Fuse Size	

STATE OF TEXAS
LARRY M. BARFIELD
39337
REGISTERED PROFESSIONAL ENGINEER
2-15-10

klotz associates

Binkley & Barfield consulting engineers
1710 Seamist Drive
Houston, Texas 77008-3189
(713) 869-3433

SURVEYED BY: GEOSOLUTIONS | FIELD BOOK NO. : N/A

CITY OF HOUSTON
DEPARTMENT OF PUBLIC WORKS AND ENGINEERING

ALMEDA SIMS WWTP & SPF IMPROVEMENTS PACKAGE I

2.4KV ELECTRICAL DISTRIBUTION ONE LINE DIAGRAM

FILE NO:	WW4903
WBS:	R-000298-0004-4
DRAWING SCALE	3/16" = 1'-0"
CITY OF HOUSTON PM	IRAJ RANJBAR, P.E.
DWG NO. :	E-101
SHEET NO.	84 OF 109

PUBLIC WORKS AND ENGINEERING
ACCEPTED & FILED
CITY DRAWING NUMBER
HOUSTON, TEXAS

COLOR TABLE:

ORIGINAL SCALE IN INCHES FOR REDUCED PLANS
0 1 2 3

G:\115800 Almeda\CADD_E-102 Prop Elect SG Bldg.dwg Feb 07,2008 - 12:56pm swh

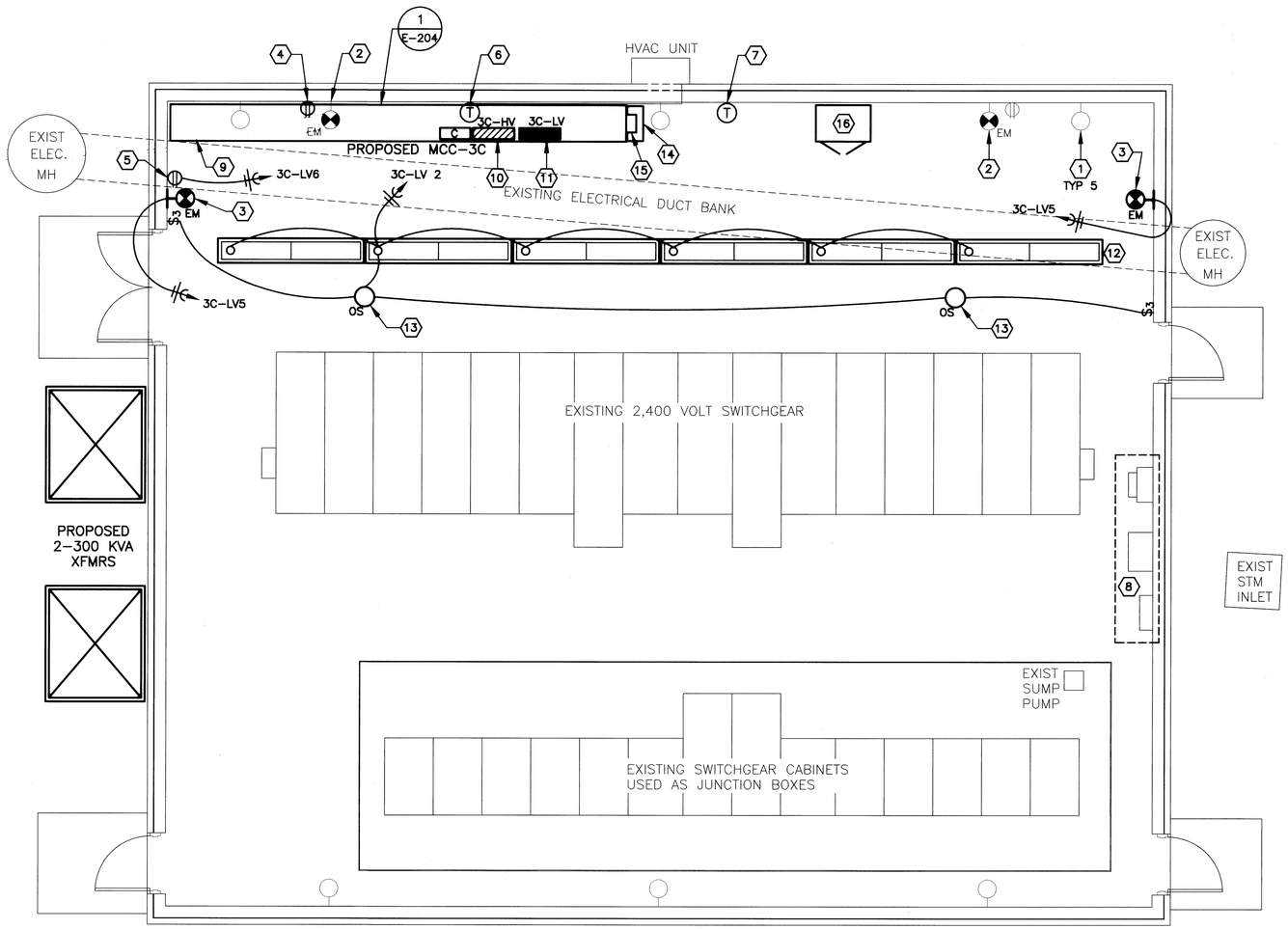

GENERAL NOTES:

1. REUSE EXISTING CONDUITS WHEREVER POSSIBLE.
2. RELOCATE ALL 120/240 VOLT BRANCH CIRCUITS FROM EXISTING CIRCUIT BREAKER PANEL TO PANEL 3C-LV IN MCC-3C. PROVIDE PANEL SCHEDULE IDENTIFYING EACH CIRCUIT.
3. RELOCATE AIR CONDITIONER CIRCUIT TO CIRCUIT BREAKER PANEL 3C-HV IN MCC-3C. IDENTIFY CIRCUIT ON PANEL SCHEDULE.
4. RELOCATE EXTERIOR LIGHTING CIRCUITS AND PHOTOCELL CONTROL WIRING FROM EXISTING LIGHTING CONTACTOR TO LIGHTING CONTACTOR IN MCC-3C.
5. AT THE CITY'S OPTION, RETURN OR DISPOSE OF ALL REMOVED ITEMS.
6. DISCONNECT AND REMOVE 480 VOLT FEEDER CIRCUIT FROM MCC-1 IN THE BLOWER BUILDING. REPLACE COVERS ON ALL CONDUIT BODIES AND CAP CONDUIT STUBS..

KEYED NOTES:

1. REMOVE FIVE HPS WALL PACK LIGHT FIXTURES
2. RELOCATE TWO EMERGENCY LIGHT ASSEMBLIES TO LOCATIONS INDICATED BY KEYED NOTE 3.
3. PROPOSED EMERGENCY LIGHT LOCATION. REMOVE EXISTING HPS FIXTURE.
4. REMOVE EXISTING 120 VOLT RECEPTACLE, WIRING AND CONDUIT FROM WALL BEHIND PROPOSED MCC-3C LOCATION.
5. LOCATION OF NEW 120 VOLT RECEPTACLE. CONNECT TO EXISTING RECEPTACLE CIRCUIT.
6. REMOVE AND RELOCATE EXISTING THERMOSTAT TO POSITION INDICATED BY KEYED NOTE 7
7. PROPOSED THERMOSTAT LOCATION.
8. EXISTING 'HOUSE LOADS' EQUIPMENT TO BE REMOVED
   A) WIREWAY
   B) TWO 480 VOLT DISCONNECT SWITCHES
   C) 15KVA DRY TRANSFORMER
   D) 120/240 VOLT CIRCUIT PANEL
   E) EXTERIOR LIGHTING CONTROL PANEL
9. PROPOSED LIGHTING CONTACTOR - IN CUBICLE BELOW PANEL 3C-HV
10. 480/277 VOLT CIRCUIT BREAKER PANEL 3C-HV. SEE DRAWING E-204 FOR PANEL SCHEDULE
11. 120/240 VOLT CIRCUIT BREAKER PANEL 3C-LV. SEE DRAWING E-204 FOR PANEL SCHEDULE
12. PROPOSED FLUORESCENT LIGHTING FIXTURES. ENCLOSED, INDUSTRIAL FIXTURES WITH FIBERGLASS HOUSING LITHONIA DM 2 96T8HO DP 120 ES,GMF OR APPROVED EQUAL CHAIN HANG FIXTURES APPROXIMATELY 12' 'AFF', CENTERED BETWEEN MCC-3C AND SWITCHGEAR.
13. OCCUPANCY SENSOR
    PROVIDE CEILING MOUNTED OCCUPANCY SENSORS TO COVER AREA BETWEEN SWITCHGEAR AND MCC-3C WITH SUFFICIENT AMPACITY, OR PROVIDED WITH MANUFACTURER FURNISHED ACCESSORIES, TO HANDLE LIGHTING LOAD.
14. UNINTERRUPTIBLE POWER SUPPLY (UPS)
15. UPS BYPASS SWITCH
16. PROVIDE EXTRA HEAVY DUTY COMBINATION STORAGE CABINET WITH ALL WELDED CONSTRUCTION, LYON MODEL #1121 (GRAINGER #5JL46) OR APPROVED EQUAL.

No.	Date	Revisions	App.

STATE OF TEXAS
LARRY M. BARFIELD
39337
REGISTERED PROFESSIONAL ENGINEER
2-8-08

klotz associates

Binkley & Barfield consulting engineers
1710 Seamist Drive
Houston, Texas 77008-3189
(713) 869-3433

SURVEYED BY: GEOSOLUTIONS | FIELD BOOK NO. : N/A

CITY OF HOUSTON
DEPARTMENT OF PUBLIC WORKS AND ENGINEERING

ALMEDA SIMS WWTP & SPF IMPROVEMENTS PACKAGE I

EXISTING 2.4KV SWITCH GEAR BLDG - LIGHTING & HOUSE LOAD MODIFICATIONS

AS BUILT

FILE NO:	WW4903
WBS:	R-000298-0004-4
DRAWING SCALE	1/4" = 1'-0"
CITY OF HOUSTON PM	IRAJ RANJBAR, P.E.
DWG NO. :	E-102
SHEET NO.	85 OF 109

PUBLIC WORKS AND ENGINEERING
ACCEPTED & FILED
44488
CITY DRAWING NUMBER
HOUSTON, TEXAS

COLOR TABLE:

ORIGINAL SCALE IN INCHES FOR REDUCED PLANS
0 1 2 3

G:\115800 Almeda Sims Package I\CADD\AS BUILT\E-200 Thickener Area Enlarged Site Plan.dwg Nov 03,2011 - 10:0

DUCTBANK SECTION A - A

3C-P09,P12	3C-P27	3C-C01 *
3C-P06	3C-P07	3C-P08
3C-P16, P-17, P-18	3C-P19, P28, P29	3C-P30, P31, P32, P33
3C-P13	3C-P14	3C-P15

DUCTBANK SECTION B - B

SPARE	3C-P27	3C-C01 *
3C-P06	3C-P07	3C-P08
3C-P09	3C-C07 **	3C-P30, P33 120 V UPS (P32)
3C-P13	3C-P14	3C-P15

** THICKENER #2 HARD WIRE CONTROL CIRCUITS TO CP 700 PER INSTRUMENTATION DRAWINGS.

DUCTBANK SECTION C - C

SPARE	3C-27	3C-C01 *
3C-P06	3C-P07	3C-P08

* CONSULT INSTRUMENTATION DRAWINGS FOR PROFIBUS CABLING REQUIREMENTS BETWEEN CP 3C, CP 700, CP 710 & CP TWAS

SEE CORRESPONDING CONDUIT & CABLE SCHEDULES FOR ADDITIONAL DETAILS

DUCTBANK SECTION D - D

SPARE	3C-P30, P33 ***
3C-C07 **	3C-P18

** THICKENER #2 HARD WIRE CONTROL CIRCUITS TO CP 700 PER INST DWGS

*** 120 VOLT UTILITY OUTLET AND STANCHION LIGHT CIRCUITS.

DUCTBANK SECTION E - E

SPARE	3C-P30, P33 ***
THICKENER #1 CONTROL WIRES **	THICKENER #1 POWER (3C-P09)

** THICKENER #1 HARD WIRE CONTROL CIRCUITS TO CP 700 PER INST DWGS

DUCTBANK SECTION E - E WIRING TO BE INSTALLED IN PACKAGE II

DUCTBANK SECTION E - E WIRING TO BE INSTALLED IN PACKAGE II

*** 120 VOLT UTILITY OUTLET AND STANCHION LIGHT CIRCUITS.

DUCTBANK SECTION F - F

SPARE	3C-P27

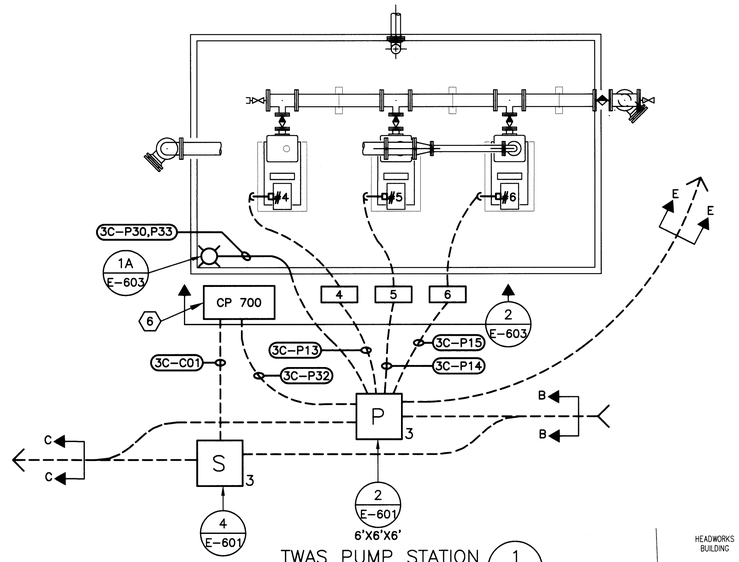

TWAS PUMP STATION 1 E-200
SCALE: 1/4"=1'-0"

GENERAL NOTES:

1. THE PAVEMENT TO THE SOUTH OF THE THICKENERS IS SCHEDULED FOR REMOVAL AND REPLACEMENT DURING THIS PROJECT. THERE IS ALSO GOING TO BE TRENCHING FOR LARGE WATER AND SLUDGE TRANSFER LINES. THE ELECTRICAL CONTRACTOR SHALL COORDINATE UNDERGROUND ELECTRICAL WORK IN THIS AREA WITH OTHER CRAFTS AND, WHEREVER POSSIBLE, TAKE ADVANTAGE OF ANY EXCAVATION DONE BY OTHERS.
2. PROPOSED CONDUIT AND DUCTBANK ROUTING IS SCHEMATIC IN NATURE. THE CONTRACTOR SHALL ADJUST THE ROUTING TO AVOID UNDERGROUND UTILITIES AND CONFLICTS WITH THE CONSTRUCTION OF THE PROPOSED THICKENER.
3. MANHOLE AND HAND HOLD PLACEMENT SHALL BE ADJUSTED TO PROVIDE FOR THE BEST ROUTING OF CONDUITS TO APPARATUS.
4. **THERE ARE 2,400 VOLT DUCTBANKS PARALLEL TO THE SOUTH FENCE LINE, FROM THE 2,400 VOLT SWITCHGEAR BUILDING, TO TRANSFORMERS FEEDING THE SLUDGE PROCESSING BUILDING AND THE WEST LIFT STATION. THE CONTRACTOR SHALL 'POT HOLE' ALONG THE PROPOSED ROUTE OF THE NEW DUCTBANK TO ASSURE THAT THE 2,400 VOLT DUCTBANKS ARE NOT IN THE WAY AND ARE NOT DAMAGED.**
5. EXISTING SIDEWALKS ADJACENT TO THE SWITCHGEAR BUILDING MAY BE DEMOLISHED TO FACILITATE THE INSTALLATION OF THE PROPOSED DUCTBANKS, BUT SHALL BE REPLACED IN KIND UPON COMPLETION OF THE UNDERGROUND WORK.
6. UNLESS OTHERWISE NOTED ABOVE GRADE CONDUITS SHALL BE PLASTIC COATED RGS. BELOW GRADE CONDUITS SHALL BE SCHEDULE 40 PVC.
7. CONTRACTOR SHALL DOCUMENT THE LOCATION OF ALL UNDERGROUND CONDUITS AND DUCTBANKS, BOTH 'AS FOUND' AND NEW, ON RED LINE MARKUP DRAWINGS SO THAT THEY CAN BE ACCURATELY SHOWN ON 'AS-BUILT' RECORD DRAWINGS.
8. SEE INSTRUMENTATION DRAWINGS FOR PROFIBUS AND CONTROL SYSTEM DETAILS.
9. [P] DESIGNATES POWER HAND HOLE
10. [S] DESIGNATES SCADA HAND HOLE

KEYED NOTES:

1. RELOCATED CAPACITOR BANK. SEE DWG E-100
2. STUB UP CONDUITS ON EXTERIOR WALL. ADJUST CONDUIT AND WALL PENETRATIONS TO ALIGN WITH WIRING COMPARTMENT OF MCC-3C
3. EXISTING TWAS PUMP LOCATION.
4. STUB UP CONDUITS ON EXTERIOR WALL. SECURE AND CAP FOR USE IN PACKAGE II.
5. TO CP TWAS SCADA PLC S7/300 CABINET BY OTHERS. FIELD DETERMINE EXACT LOCATION
6. PUMPS CONTROLLED BY SCADA SYSTEM VIA CP 700.

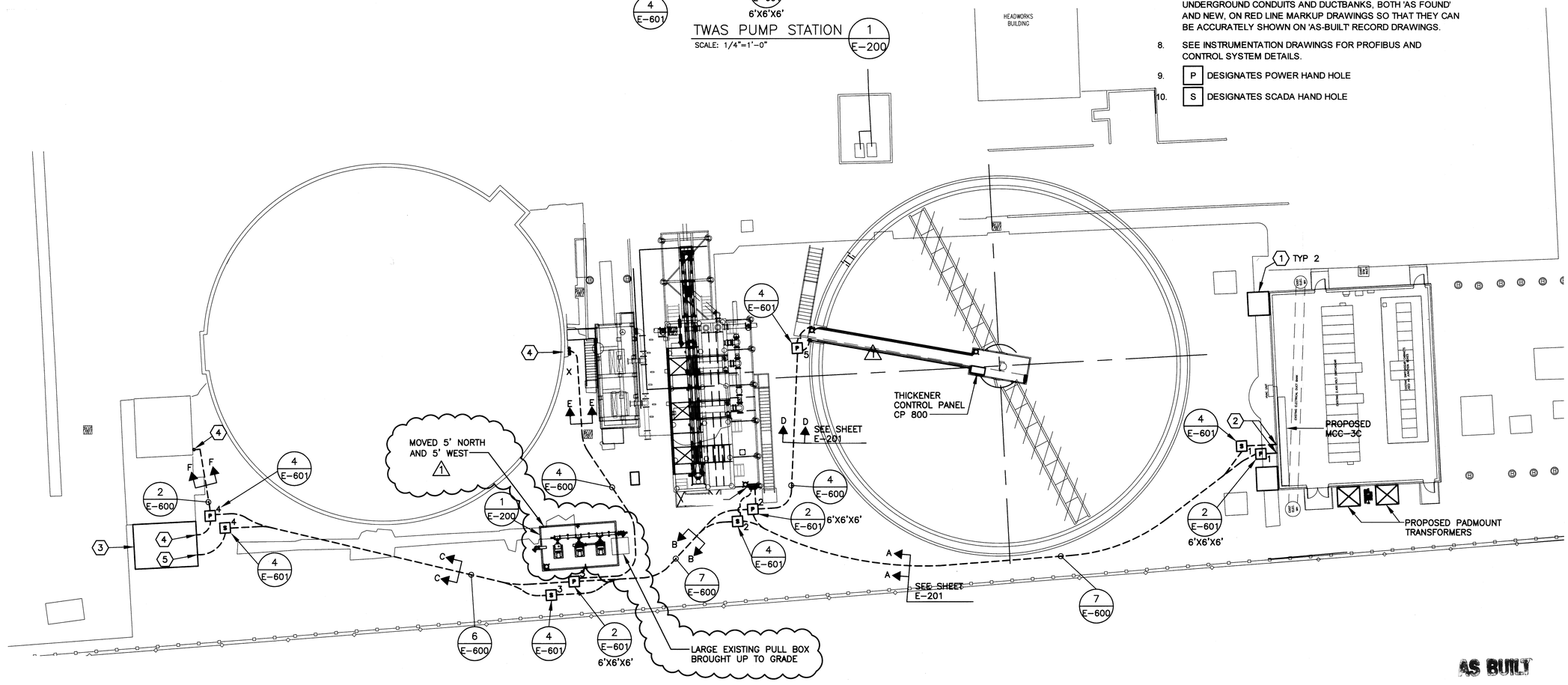

No.	Date	Revisions	App.
1	11/03/11	ADDED NOTES AT PAD – AS BUILT	L.C.C.

STATE OF TEXAS
LARRY M. BARFIELD
39337
REGISTERED PROFESSIONAL ENGINEER
2-15-12

klotz associates

Binkley & Barfield consulting engineers
1710 Seamist Drive
Houston, Texas 77008-3189
(713) 869-3433

SURVEYED BY: GEOSOLUTIONS | FIELD BOOK NO. : N/A

CITY OF HOUSTON
DEPARTMENT OF PUBLIC WORKS AND ENGINEERING

ALMEDA SIMS WWTP & SPF IMPROVEMENTS PACKAGE I

THICKENER AREA - ENLARGED ELECTRICAL SITE PLAN

FILE NO:	WW4903
WBS:	R-000298-0004-4
DRAWING SCALE	
1/16" = 1'-0"	
CITY OF HOUSTON PM	
IRAJ RANJBAR, P.E.	
DWG NO. :	E-200
SHEET NO.	86 OF 109

PUBLIC WORKS AND ENGINEERING ACCEPTED & FILED
CITY DRAWING NUMBER
HOUSTON, TEXAS

COLOR TABLE:

ORIGINAL SCALE IN INCHES FOR REDUCED PLANS
0 1 2 3

G:\115800 Almeda\CADD_E-201 Prop Screen Plan Elect.dwg Feb 07,2008 - 12:57pm swh

GENERAL NOTES:

1. CONDUIT ROUTING IS SCHEMATIC IN NATURE ONLY. THE CONTRACTOR SHALL DETERMINE THE BEST CONDUIT ROUTES FOR BOTH POWER AND CONTROL OF THE SCREENING AND THICKENER EQUIPMENT.
2. THE CONTRACTOR SHALL ROUTE CONDUITS TO AVOID INTERFERENCE WITH MAINTENANCE AND/OR REPLACEMENT OF MECHANICAL AND PIPING SYSTEM COMPONENTS.
3. CONTRACTOR SHALL DOCUMENT THE LOCATION OF ALL CONDUITS ON RED LINE MARKUP DRAWINGS SO THAT THEY CAN BE ACCURATELY SHOWN ON 'AS-BUILT' RECORD DRAWINGS.
4. PROVIDE AND INSTALL AN EMERGENCY STOP LANYARD SYSTEM. THE LANYARD SWITCH SHALL BE BOTH HARD WIRED TO THE CONVEYOR MOTOR STARTER AND, WITH A SET OF DRY CONTACTS, TO CP 710.
5. SEE INSTRUMENTATION DRAWINGS FOR PROFIBUS AND CONTROL SYSTEM DETAILS.
6. [P] DESIGNATES POWER HAND HOLE
7. [S] DESIGNATES SCADA HAND HOLE

KEYED NOTES:

1. PROPOSED DUCTBANK SYSTEM WITH POWER, CONTROL AND PROFIBUS CABLING. SEE DRAWING E-200
2. CONTROL CABINET CP 710 IS PROVIDED WITH 120 VOLT UPS POWER FOR THE SCADA I/O EQUIPMENT ONLY AND 120 VOLT UTILITY POWER FOR THE SCREEN LUBRICATION PUMPS, CONVEYOR WASH DOWN SOLENOID, AND ANCILLARY EQUIPMENT.
3. 120 VOLT CONTROL WIRING FOR EMERGENCY STOP LANYARD SWITCH.
4. ROUTE CONDUITS BETWEEN LIGHT STANCHIONS AND CONNECT TO CIRCUITS 3C-P30, P-33 IN HAND HOLE P5
5. ROUTE CONDUITS BETWEEN LIGHT STANCHIONS AND CONNECT TO CIRCUITS 3C-P30, P-33 IN HAND HOLE P2

DUCTBANK SECTION A - A

3C-P09, P12	3C-P27	3C-C01 *
3C-P06	3C-P07	3C-P08
3C-P16, P-17, P-18	3C-P19, P28, P29	3C-P30, P31, P32, P33
3C-P13	3C-P14	3C-P15

DUCTBANK SECTION B - B

SPARE	3C-P27	3C-C01 *
3C-P06	3C-P07	3C-P08
3C-P09	3C-C07 **	3C-P30, P33 120 V UPS (P32)
3C-P13	3C-P14	3C-P15

** THICKENER #2 HARD WIRE CONTROL CIRCUITS TO CP 700 PER INSTRUMENTATION DRAWINGS.

* CONSULT INSTRUMENTATION DRAWINGS FOR PROFIBUS CABLING REQUIREMENTS BETWEEN CP 3C, CP 700, CP 710 & CP TWAS

DUCTBANK SECTION D - D

SPARE	3C-P30, P33 ***
3C-C07 **	3C-P18

** THICKENER #2 HARD WIRE CONTROL CIRCUITS TO CP 700 PER INST DWGS

*** 120 VOLT UTILITY OUTLET AND STANCHION LIGHT CIRCUITS.

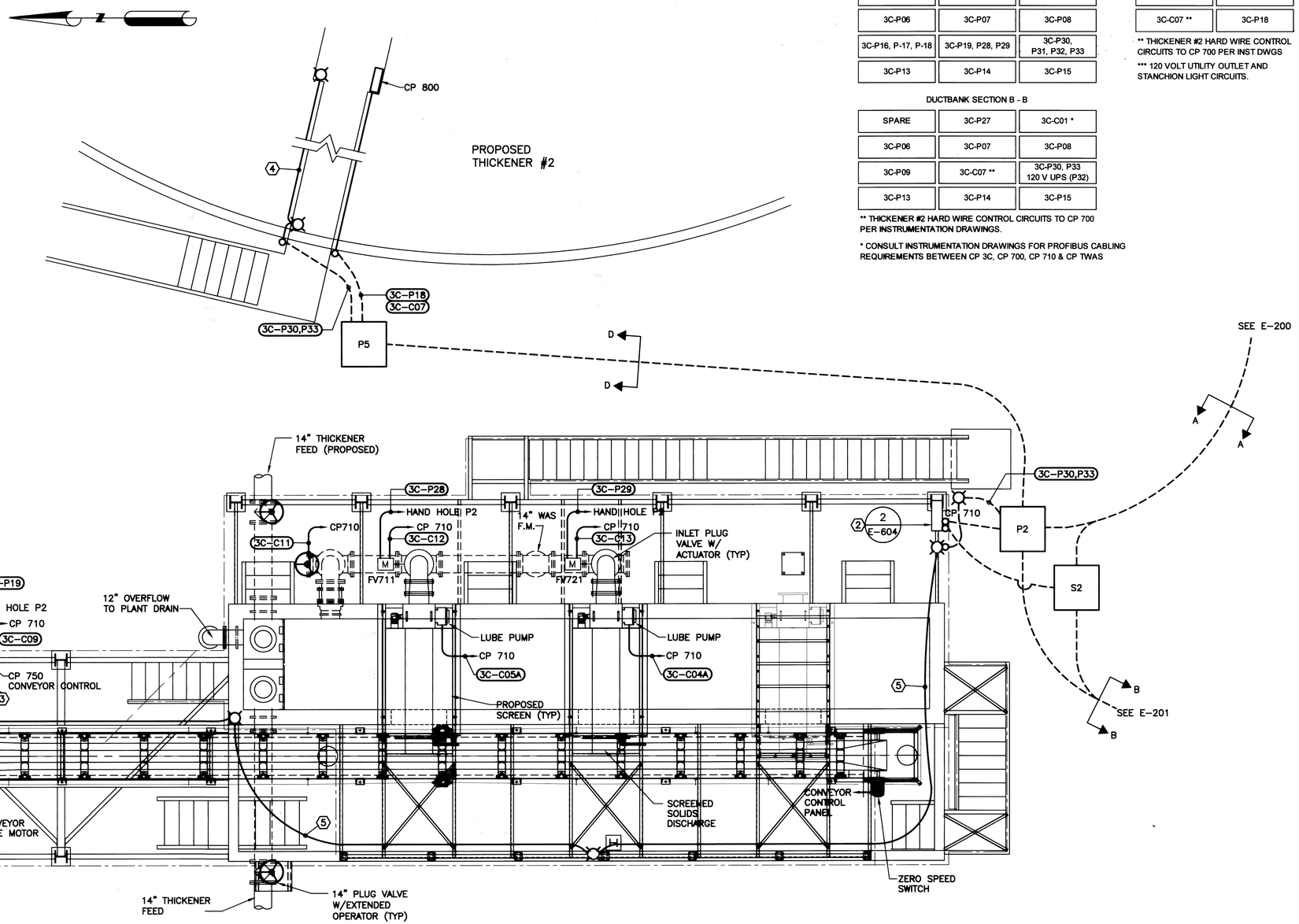

SUPPLEMENTAL CONDUIT and CABLE SCHEDULE

SEE SHEETS E-205 AND E-206

CONDUIT TAG No.	CABLE SIZE & QUANTITY	CONDUIT SIZE	VOLTAGE	FROM	TO	COMMENTS/REMARKS
3C-C11	2 PAIR #16	3/4"	CONTROL SIGNALS	BYPASS VALVE	CP 710	VALVE POSITION INDICATOR SWITCH
3C-C12	6 PAIR #16	3/4"	CONTROL SIGNALS	MOV FV711	CP 710	
3C-C13	6 PAIR #16	3/4"	CONTROL SIGNALS	MOV FV710	CP 710	

AS BUILT

No.	Date	Revisions	App.

STATE OF TEXAS
LARRY M. BARFIELD
39337
REGISTERED PROFESSIONAL ENGINEER
2-8-08

klotz associates

Binkley & Barfield consulting engineers
1710 Seamist Drive
Houston, Texas 77008-3189
(713) 869-3433

SURVEYED BY: GEOSOLUTIONS | FIELD BOOK NO. : N/A

CITY OF HOUSTON
DEPARTMENT OF PUBLIC WORKS AND ENGINEERING

ALMEDA SIMS WWTP & SPF IMPROVEMENTS PACKAGE I

PROPOSED SCREENING FACILITY ELECTRICAL PLAN - PLAN VIEW

FILE NO:	WW4903
WBS:	R-000298-0004-4
DRAWING SCALE	1/4" = 1'-0"
CITY OF HOUSTON PM	IRAJ RANJBAR, P.E.
DWG NO. :	E-201
SHEET NO.	87 OF 109

PUBLIC WORKS AND ENGINEERING ACCEPTED & FILED 44488 CITY DRAWING NUMBER HOUSTON, TEXAS

COLOR TABLE:

ORIGINAL SCALE IN INCHES FOR REDUCED PLANS
0 1 2 3

G:\115800 Almeda\CADD_E-202&3 Prop. Screen. East Elev.dwg Feb 07,2008 - 12:57pm swh

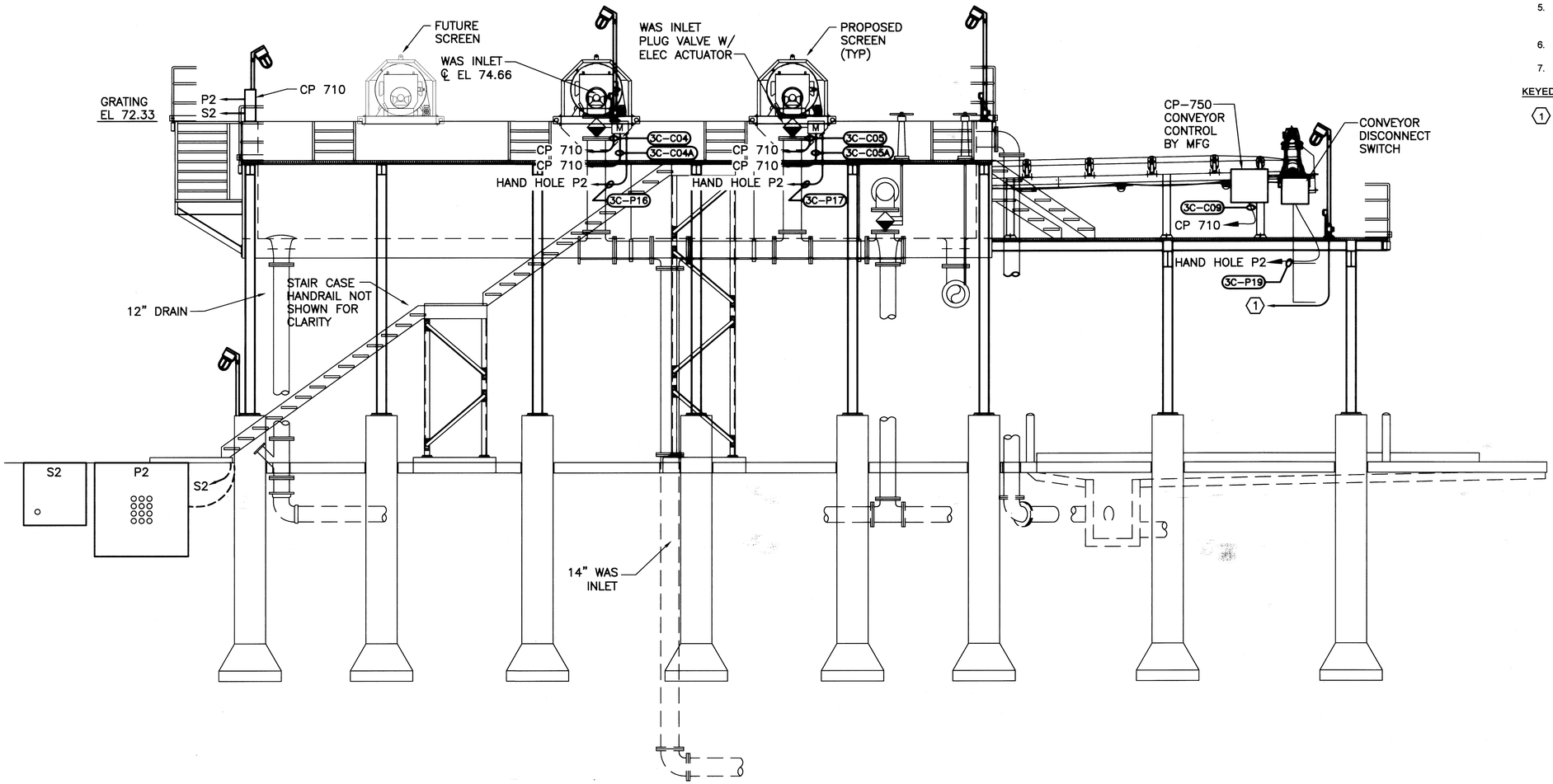

SCREENS FACILITY PROFILE EAST ELEVATION

GENERAL NOTES:

1. CONDUIT ROUTING IS SCHEMATIC IN NATURE ONLY. THE CONTRACTOR SHALL DETERMINE THE BEST CONDUIT ROUTES FOR BOTH POWER AND CONTROL OF THE SCREENING AND THICKENER EQUIPMENT.
2. THE CONTRACTOR SHALL ROUTE CONDUITS TO AVOID INTERFERENCE WITH MAINTENANCE AND/OR REPLACEMENT OF MECHANICAL AND PIPING SYSTEM COMPONENTS.
3. CONTRACTOR SHALL DOCUMENT THE LOCATION OF ALL CONDUITS ON RED LINE MARKUP DRAWINGS SO THAT THEY CAN BE ACCURATELY SHOWN ON 'AS-BUILT' RECORD DRAWINGS.
4. PROVIDE AND INSTALL AN EMERGENCY STOP LANYARD SYSTEM. THE LANYARD SWITCH SHALL BE BOTH HARD WIRED TO THE CONVEYOR MOTOR STARTER AND WITH A DRY CONTACT TO CP 710.
5. SEE INSTRUMENTATION DRAWINGS FOR PROFIBUS AND CONTROL SYSTEM DETAILS.
6. [P] DESIGNATES POWER HAND HOLE
7. [S] DESIGNATES SCADA HAND HOLE

KEYED NOTES:

(1) ROUTE CONDUITS BETWEEN LIGHT STANCHIONS AND CONNECT TO CIRCUITS 3C-P30, P-33 IN HAND HOLE P2

AS BUILT

No.	Date	Revisions	App.

STATE OF TEXAS
LARRY M. BARFIELD
39337
REGISTERED PROFESSIONAL ENGINEER
2-8-08

klotz associates

Binkley & Barfield consulting engineers
1710 Seamist Drive
Houston, Texas 77008-3189
(713) 869-3433

SURVEYED BY: GEOSOLUTIONS | FIELD BOOK NO. : N/A

CITY OF HOUSTON
DEPARTMENT OF PUBLIC WORKS AND ENGINEERING

ALMEDA SIMS WWTP & SPF IMPROVEMENTS PACKAGE I

PROPOSED SCREENING FACILITY ELECTRICAL PLAN - EAST ELEVATION

FILE NO:	WW4903
WBS:	R-000298-0004-4
DRAWING SCALE	1/4" = 1'-0"
CITY OF HOUSTON PM	IRAJ RANJBAR, P.E.
DWG NO. :	E-202
SHEET NO.	88 OF 109

PUBLIC WORKS AND ENGINEERING
ACCEPTED & FILED
44488
CITY DRAWING NUMBER
HOUSTON, TEXAS

COLOR TABLE:

ORIGINAL SCALE IN INCHES FOR REDUCED PLANS
0 1 2 3

G:\115800 Almeda\CADD_E-202&3 Prop Screen East Elev.dwg Feb 07,2008 - 12:57pm swh

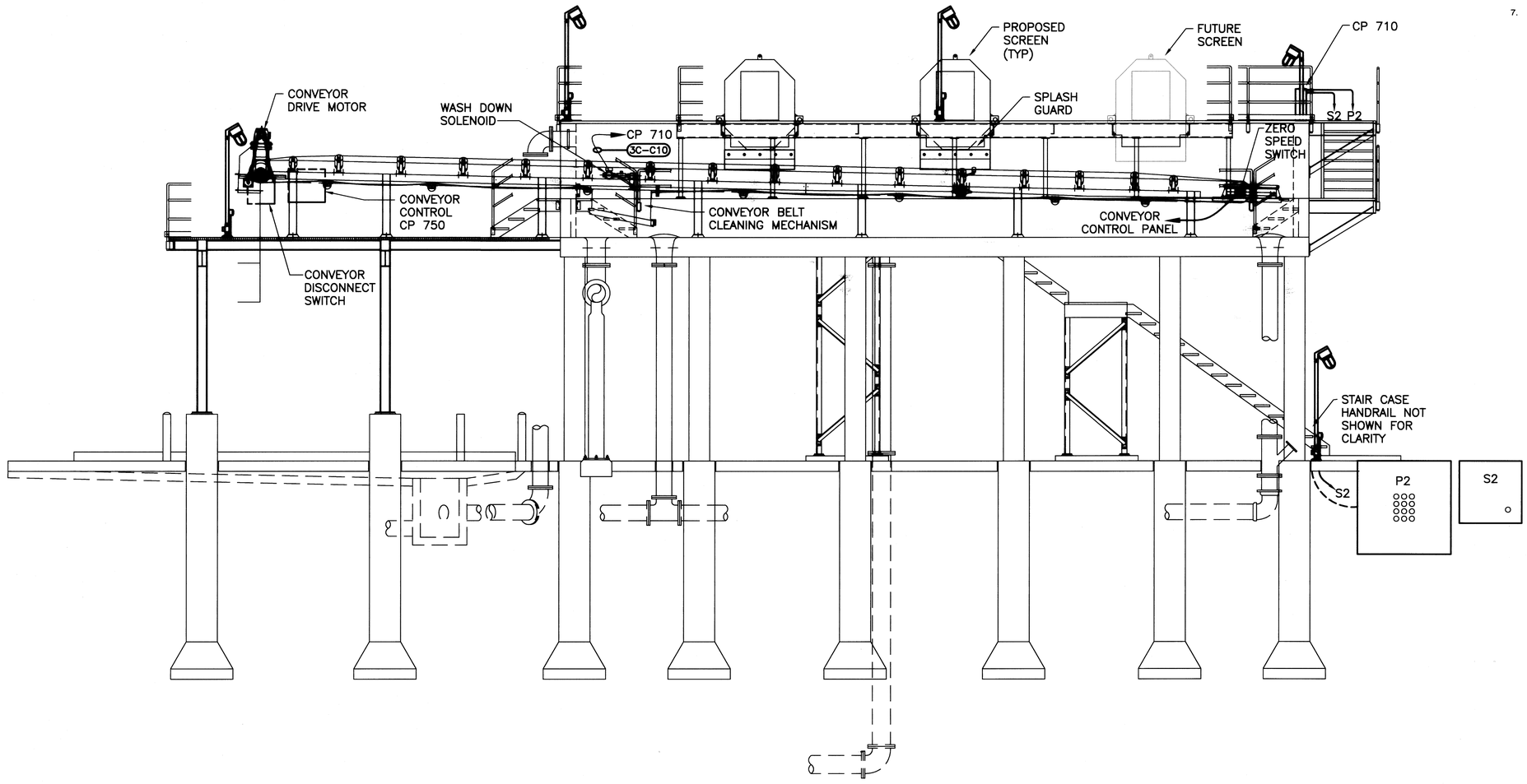

SCREENS FACILITY PROFILE WEST ELEVATION

GENERAL NOTES:

1. CONDUIT ROUTING IS SCHEMATIC IN NATURE ONLY. THE CONTRACTOR SHALL DETERMINE THE BEST CONDUIT ROUTES FOR BOTH POWER AND CONTROL OF THE SCREENING AND THICKENER EQUIPMENT.
2. THE CONTRACTOR SHALL ROUTE CONDUITS TO AVOID INTERFERENCE WITH MAINTENANCE AND/OR REPLACEMENT OF MECHANICAL AND PIPING SYSTEM COMPONENTS.
3. CONTRACTOR SHALL DOCUMENT THE LOCATION OF ALL CONDUITS ON RED LINE MARKUP DRAWINGS SO THAT THEY CAN BE ACCURATELY SHOWN ON 'AS-BUILT' RECORD DRAWINGS.
4. PROVIDE AND INSTALL AN EMERGENCY STOP LANYARD SYSTEM. THE LANYARD SWITCH SHALL BE BOTH HARD WIRED TO THE CONVEYOR MOTOR STARTER AND WITH A DRY CONTACT TO CP 710.
5. SEE INSTRUMENTATION DRAWINGS FOR PROFIBUS AND CONTROL SYSTEM DETAILS.
6. [P] DESIGNATES POWER HAND HOLE
7. [S] DESIGNATES SCADA HAND HOLE

No.	Date	Revisions	App.

STATE OF TEXAS
LARRY M. BARFIELD
39337
REGISTERED PROFESSIONAL ENGINEER
2-5-08

klotz associates

Binkley & Barfield consulting engineers
1710 Seamist Drive
Houston, Texas 77008-3189
(713) 869-3433

SURVEYED BY: GEOSOLUTIONS | FIELD BOOK NO. : N/A

CITY OF HOUSTON
DEPARTMENT OF PUBLIC WORKS AND ENGINEERING

ALMEDA SIMS WWTP & SPF IMPROVEMENTS PACKAGE I

PROPOSED SCREENING FACILITY ELECTRICAL PLAN - WEST ELEVATION

AS BUILT

FILE NO:	WW4903
WBS:	R-000298-0004-4
DRAWING SCALE	1/4" = 1'-0"
CITY OF HOUSTON PM	IRAJ RANJBAR, P.E.
DWG NO. :	E-203
SHEET NO.	89 OF 109

PUBLIC WORKS AND ENGINEERING
ACCEPTED & FILED
444888
CITY DRAWING NUMBER
HOUSTON, TEXAS

COLOR TABLE:

ORIGINAL SCALE IN INCHES FOR REDUCED PLANS
0 1 2 3

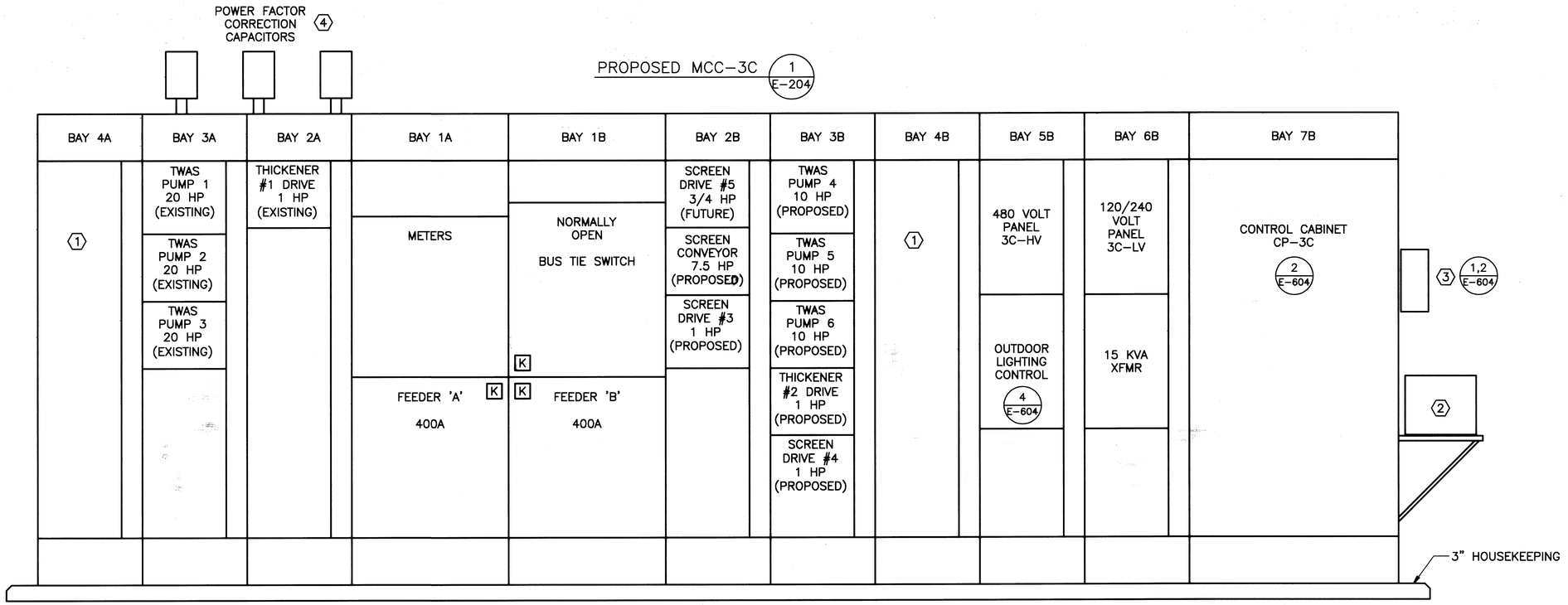

PANEL '3C-LV' - PANEL SCHEDULE

120/240 VOLT, 1 PHASE, 3 WIRE, 80 AMP MAIN CIRCUIT BREAKER, 25 KA RMS SYM,

NEMA 1 CIRCUIT BREAKER PANEL WITH NEUTRAL AND GROUND BARS. INSTALLED IN MCC-3C

DESCRIPTION	LOAD VA	WIRE DATA or TAG #	BKR. SIZE	CKT. NO.	PHASE AMPS A Ø	PHASE AMPS B Ø	CKT. NO.	BKR. SIZE	WIRE DATA or TAG #	LOAD VA	DESCRIPTION
OUTSIDE LIGHTS MOUNTED ON BUILDING	1,500	2 x #12 #12 GND	15 A 2 POLE	1	10.4		2	15 A 1 POLE	2 x #12 #12 GND	1,250	INSIDE LIGHTS
				3		10.4	4	15 A 1 POLE	2 x #12 #12 GND	1,250	INSIDE LIGHTS
EMERGENCY LIGHTING	48	2 x #12 #12 GND	15 A 1 POLE	5	9.0		6	20 A 1 POLE	2 x #12 #12 GND	1,080	RECEPTACLES
EXIT LIGHTS	48	2 x #12 #12 GND	15 A 1 POLE	7		9.8	8	20 A 1 POLE	2 x #12 #12 GND	1,176	SUMP PUMP 1/2 HP
CONTROL PANEL 3C-CP UPS	1,500	2 x #12 #12 GND	20 A 1 POLE	9	12.5		10	20 A 1 POLE	2 x #8, #8 GND	1,500	LIGHT STANCHION RECEPTACLES 3C-P30
NON UPS PWR TO FIELD CONT PANELS	1,500	3C-P32	20 A 1 POLE	11		0.0	12				
				13			14				
				15			16				
				17			18				
				19			20				
				21			22				
				23			24				
				25			26				
				27			28				
				29			30				

51.1	39.4

TOTAL CONNECTED LOAD

55.4	57.0

TOTAL NEC LOAD

PANEL '3C-HV' - PANEL SCHEDULE

480/277 VOLT, 3 PHASE, 4 WIRE, 200 AMP MAIN CIRCUIT BREAKER, 42 KA RMS SYM,

NEMA 1 CIRCUIT BREAKER PANEL WITH NEUTRAL AND GROUND BARS. INSTALLED IN MCC-3C

DESCRIPTION	LOAD VA	WIRE DATA or TAG #	BKR. SIZE	CKT. NO.	PHASE AMPS A Ø	PHASE AMPS B Ø	PHASE AMPS C Ø	CKT. NO.	BKR. SIZE	WIRE DATA or TAG #	LOAD VA	DESCRIPTION
AIR CONDITIONER (SWITCHGEAR BLDG)	19,944	3 x #10 #10 GND	30 A* 3 POLE HACR	1	15.6			2	40 A 2 POLE	3C-P27		15KVA DRY TRANSFORMER (EXISTING MCC-3C BLDG)
				3		15.6		4				
				5			5.7	6	20 A 1 POLE	3 x #12, #12 NEUTRAL	1,575	LIGHTING CONTACTOR
MOV FV 711 (SCREENING STRUCTURE)	2,493	3 x #12, #12 GND 3C-P28	15 A 3 POLE	7	0.0			8	20 A 1 POLE			LIGHTING CONTACTOR
				9		0.0		10	20 A 1 POLE			LIGHTING CONTACTOR
				11			0.0	12				
MOV FV 721 (SCREENING STRUCTURE)	2,493	3 x #12, #12 GND 3C-P29	15 A 3 POLE	13	0.0			14				
				15		0.0		16				
				17			0.0	18				
				19				20				
				21				22				
				23				24				
				25				26				
				27				28				
				29				30				

* COORDINATE CIRCUIT BREAKER SIZE WITH MANUFACTURER'S NAMEPLATE DATA

45.6	45.6	35.7

TOTAL CONNECTED LOAD

51.6	51.6	41.1

TOTAL NEC LOAD

KEYED NOTES:

⟨1⟩ SPARE SECTIONS FOR FUTURE USE. PROVIDE WITH 300 AMP VERTICAL BUSING.

⟨2⟩ PROVIDE UPS, PER DIVISION 13 SPECIFICATIONS, FOR PLC/SCADA SYSTEM COMPONENTS. PROVIDE AND INSTALL A STEEL SHELF WITH ADEQUATE SUPPORT BRACING ATTACHED TO THE SIDE OF CONTROL CABINET CP-3C, APPROXIMATELY 2' AFF'. PAINT SHELF AND BRACKETS WITH AN EPOXY BASED PAINT THAT MATCHES THE COLOR OF THE MCC.

⟨3⟩ UPS BYPASS SWITCH.

⟨4⟩ POWER FACTOR CORRECTION CAPACITORS SIZE PER MOTOR MANUFACTURER'S RECOMMENDATION.

AS BUILT

No.	Date	Revisions	App.

STATE OF TEXAS — LARRY M. BARFIELD — 39337 — REGISTERED PROFESSIONAL ENGINEER — 2-8-08

klotz associates

Binkley & Barfield consulting engineers
1710 Seamist Drive
Houston, Texas 77008-3189
(713) 869-3433

SURVEYED BY: GEOSOLUTIONS | FIELD BOOK NO. : N/A

CITY OF HOUSTON
DEPARTMENT OF PUBLIC WORKS AND ENGINEERING

ALMEDA SIMS WWTP & SPF IMPROVEMENTS PACKAGE I

ELECTRICAL -
PROPOSED MCC-3C ELEVATION AND PANEL SCHEDULES

FILE NO:	WW4903
WBS:	R–000298–0004–4
DRAWING SCALE	NO SCALE
CITY OF HOUSTON PM	IRAJ RANJBAR, P.E.
DWG NO. :	E–204
SHEET NO.	90 OF 109

PUBLIC WORKS AND ENGINEERING — ACCEPTED & FILED — 44488 — CITY DRAWING NUMBER — HOUSTON, TEXAS

COLOR TABLE:

ORIGINAL SCALE IN INCHES FOR REDUCED PLANS
0 1 2 3

G:\115800 Almeda\CADD_E-204 MCC-3C Elevation.dwg Feb 07,2008 - 12:58pm swh

G:\115800 Almeda\CADD_E-205 MCC-3C 'A' One Line Diagram.dwg Feb 07,2008 - 2:12pm swh

BUS 'A' 600 AMP 480/277 VOLT, 3 PHASE, 4 WIRE, 42 KAIC, NEMA 1 ENCLOSURE

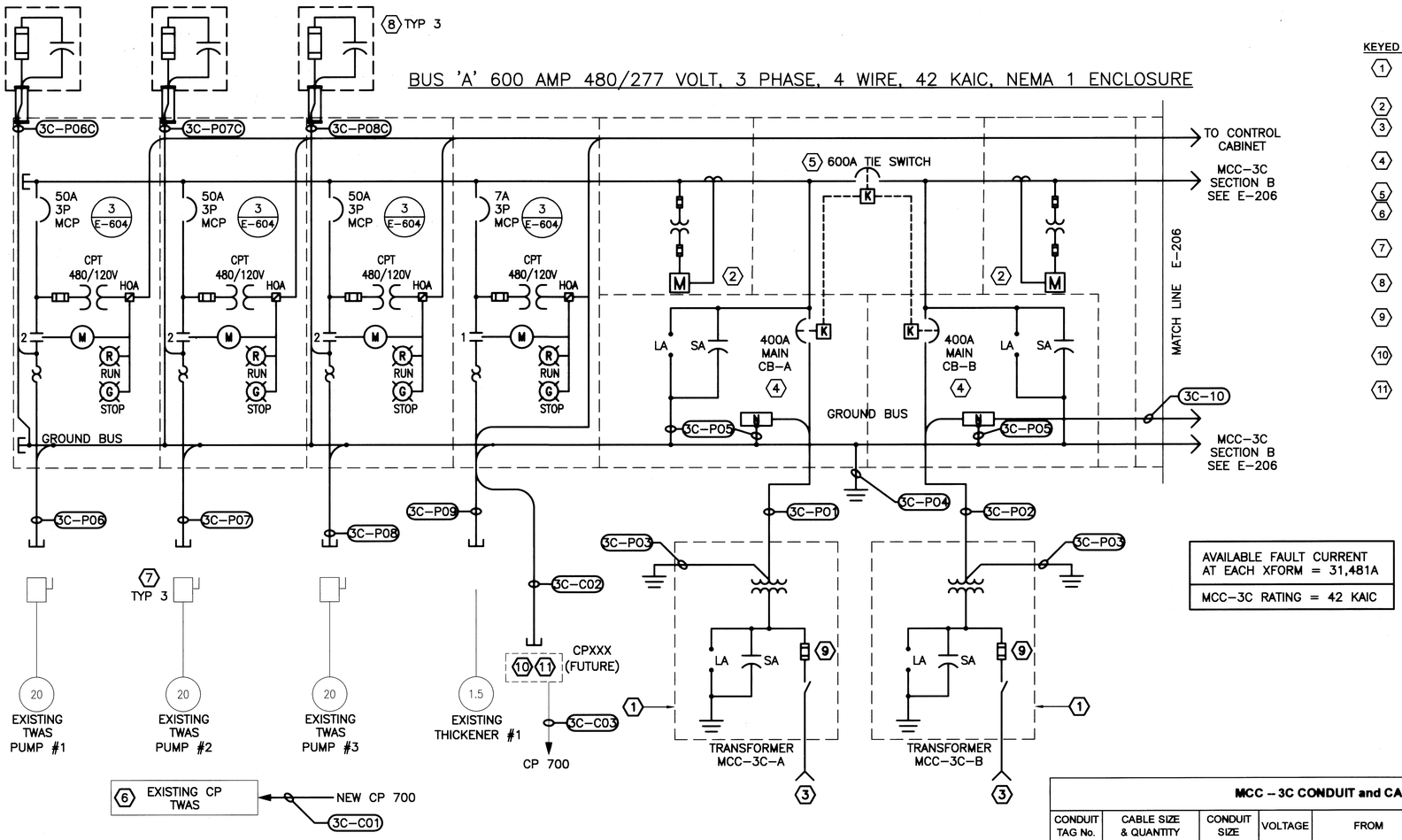

PROPOSED MCC-3C INCOMING POWER AND SECTION A

LOCATION - MAIN 2,400 VOLT SWITCHGEAR BUILDING

KEYED NOTES:

1. 300 KVA, 2,400 VOLT TO 480/277 VOLT PADMOUNT TRANSFORMER WITH INTERNAL FUSES, SURGE AND LIGHTNING PROTECTION.
2. DIGITAL PANEL METERS.
3. FROM 2,400 VOLT ELECTRICAL SERVICE ON SOUTH SIDE OF THE PLANT. SEE DRAWINGS E-100 FOR CONDUIT/CABLE SCHEDULE.
4. 600 AMP FRAME CIRCUIT BREAKER WITH 400 AMP RATING PLUG. 100% RATED
5. 600 AMP MOLDED CASE SWITCH. NO OCP REQUIRED.
6. EXISTING CP TWAS. SIEMENS S7/300. SEE INSTRUMENTATION DRAWING I - 101
7. PROVIDE & CAP CONDUITS FOR THE CONNECTION OF EXISTING TWAS PUMPS #1, #2, & #3 IN CONSTRUCTION PACKAGE #2.
8. POWER FACTOR CORRECTION CAPACITORS SIZE PER MOTOR MANUFACTURER'S RECOMMENDATION.
9. CLASS E, 125 AMP, CURRENT LIMITING FUSE PER TRANSFORMER MANUFACTURER.
10. LOCAL CONTROL PANEL PROVIDED BY EQUIPMENT MANUFACTURER. CONTROL CONNECTS TO SCADA SYSTEM.
11. PROVIDE HARD WIRED 'E' STOP FROM OVER TORQUE LIMIT SWITCH

AVAILABLE FAULT CURRENT AT EACH XFORM = 31,481A
MCC-3C RATING = 42 KAIC

ELECTRICAL LOAD ANALYSIS MCC-3C

LOAD DESCRIPTION	SECTION 'A' CONNECTED LOAD AMPS @ 480/277V	SECTION 'A' MULT.	SECTION 'A' NEC LOAD AMPS @ 480/277V	SECTION 'B' CONNECTED LOAD AMPS @ 480/277V	SECTION 'B' MULT.	SECTION 'B' NEC LOAD AMPS @ 480/277V	TOTAL LOAD CONNECTED LOAD AMPS @ 480/277V	TOTAL LOAD MULT.	TOTAL LOAD NEC LOAD AMPS @ 480/277V
20 HP TWAS PUMPS (3)	81.0	1.00	81.0				81.0	1.00	81.0
10 HP TWAS PUMPS (3)				42.0	1.00	42.0	42.0	1.00	42.0
7.5 HP SCREEN CONVEYOR		1.00	0.0	11.0	1.00	11.0	11.0	1.00	11.0
1 HP THICKENER DRIVE (2)	3.0	1.00	3.0	3.0	1.00	3.0	6.0	1.00	6.0
1 HP SCREEN DRIVE (3)	0.0	1.00	0.0	6.3	1.00	6.3	6.3	1.00	6.3
EXTERIOR LIGHTING		1.25	0.0	5.7	1.25	7.1	5.7	1.25	7.1
EXTERIOR UTILITY OUTLETS (7 x 180 VA)		1.00	0.0	1.8	1.00	1.8	1.8	1.00	1.8
EXISTING BUILDING LOADS	5.0	1.25	6.3	31.3	1.25	39.1	36.3	1.25	45.3
EXISTING AIR CONDITIONER		1.00	0.0	24.0	1.00	24.0	24.0	1.00	24.0
25% OF LARGEST MOTOR	6.8	1.00	6.8	6.8	1.00	6.8	6.8	1.00	6.8
	SECTION 'A' LOAD		97.1	SECTION 'B' LOAD		141.1	TOTAL LOAD		231.3

TOTAL LOAD = 231.3 AMPS

MCC - 3C CONDUIT and CABLE SCHEDULE 1 OF 3

CONDUIT TAG No.	CABLE SIZE & QUANTITY	CONDUIT SIZE	VOLTAGE	FROM	TO	COMMENTS/REMARKS
3C-P01	3 x 500 Kcmil, 1/0 NEUTRAL	* 4" PVC SCHED 80	480	PADMOUNT TRANSFORMER MCC-3C-A	MCC-3C SECTION 'A'	* SEE DRAWING E-100 FOR ADDITIONAL DETAILS
3C-P02	3 x 500 Kcmil, 1/0 NEUTRAL	* 4" PVC SCHED 80	480	PADMOUNT TRANSFORMER MCC-3C-B	MCC-3C SECTION 'B'	* SEE DRAWING E-100 FOR ADDITIONAL DETAILS
3C-P03	1/0 BARE GND	1" PVC SCHED 80	GND POTENTIAL	PADMOUNT TRANSFORMERS	GROUNDING ELECTRODE SYSTEM	* SEE DRAWING E-100 FOR ADDITIONAL DETAILS
3C-P04	1/0 BARE GND	1" PVC SCHED 80	GND POTENTIAL	MCC-3C GROUND BUS	GROUNDING ELECTRODE SYSTEM	* SEE DRAWING E-100 FOR ADDITIONAL DETAILS
3C-P05	1/0 BARE GND	MCC INTERNAL	GND POTENTIAL	NEUTRAL BARS	GROUND BUS	MAIN BONDING JUMPERS, INTERNAL TO MCC
3C-P06	3x #8, #10 GND (FUTURE)	1-1/2"	480	TWAS PUMP #1 STARTER	TWAS PUMP #1 FIELD DISCONNECT SW	CONDUIT ONLY AT THIS TIME
3C-P07	3x #8, #10 GND (FUTURE)	1-1/2"	480	TWAS PUMP #2 STARTER	TWAS PUMP #2 FIELD DISCONNECT SW	CONDUIT ONLY AT THIS TIME
3C-P08	3x #8, #10 GND (FUTURE)	1-1/2"	480	TWAS PUMP #3 STARTER	TWAS PUMP #3 FIELD DISCONNECT SW	CONDUIT ONLY AT THIS TIME
3C-P06C	3 x #8, #10 GND	3/4" NIPPLE	480	TWAS PUMP #1 STARTER	P.F. CORRECTION CAPACITOR	MOUNTED ON TOP OF MCC-3C
3C-P07C	3 x #8, #10 GND	3/4" NIPPLE	480	TWAS PUMP #2 STARTER	P.F. CORRECTION CAPACITOR	MOUNTED ON TOP OF MCC-3C
3C-P08C	3 x #8, #10 GND	3/4" NIPPLE	480	TWAS PUMP #3 STARTER	P.F. CORRECTION CAPACITOR	MOUNTED ON TOP OF MCC-3C
3C-P09	6 x #10, #10 GND (FUTURE)	1-1/2"	480	EXISTING THICKENER STARTER	EXISTING THICKENER	CONDUIT ONLY AT THIS TIME SHARE WITH 3C-P12
3C-P10	#4	MCC INTERNAL	GND POTENTIAL	NEUTRAL BAR	POWER PANEL 3C-HV	PANEL 3C-HV NEUTRAL CONDUCTOR, INTERNAL TO MCC
3C-C01	PROFIBUS	1-1/2"	DIGITAL DATA	PROFIBUS CABLE IS 'DAISY CHAIN' CONNECTED FROM CP TWAS TO CP 700 TO CP 710 TO CP 3C. SEE SHEET I-101		

NOTES:

3C-PXX DENOTES POWER

3C-CXX DENOTES CONTROL

AS BUILT

No.	Date	Revisions	App.

STATE OF TEXAS
LARRY M. BARFIELD
39337
REGISTERED PROFESSIONAL ENGINEER
2-8-08

klotz associates

Binkley & Barfield consulting engineers
1710 Seamist Drive
Houston, Texas 77008-3189
(713) 869-3433

SURVEYED BY: GEOSOLUTIONS FIELD BOOK NO. : N/A

CITY OF HOUSTON
DEPARTMENT OF PUBLIC WORKS AND ENGINEERING

ALMEDA SIMS WWTP & SPF IMPROVEMENTS PACKAGE I

ELECTRICAL - MCC-3C ONE LINE DIAGRAM & DETAILS, SHEET 1 OF 2

FILE NO:	WW4903
WBS: R-000298-0004-4	
DRAWING SCALE	
NTS	
CITY OF HOUSTON PM	
IRAJ RANJBAR, P.E.	
DWG NO. :	E-205
SHEET NO.	91 OF 109

PUBLIC WORKS AND ENGINEERING ACCEPTED & FILED 44488 CITY DRAWING NUMBER HOUSTON, TEXAS

COLOR TABLE:

ORIGINAL SCALE IN INCHES FOR REDUCED PLANS
0 1 2 3

G:\115800 Almeda\CADD_E-206 MCC-3C 'B' One Line Diagram.dwg Feb 07,2008 - 2:13pm swh

COLOR TABLE:

ORIGINAL SCALE IN INCHES FOR REDUCED PLANS
0 1 2 3

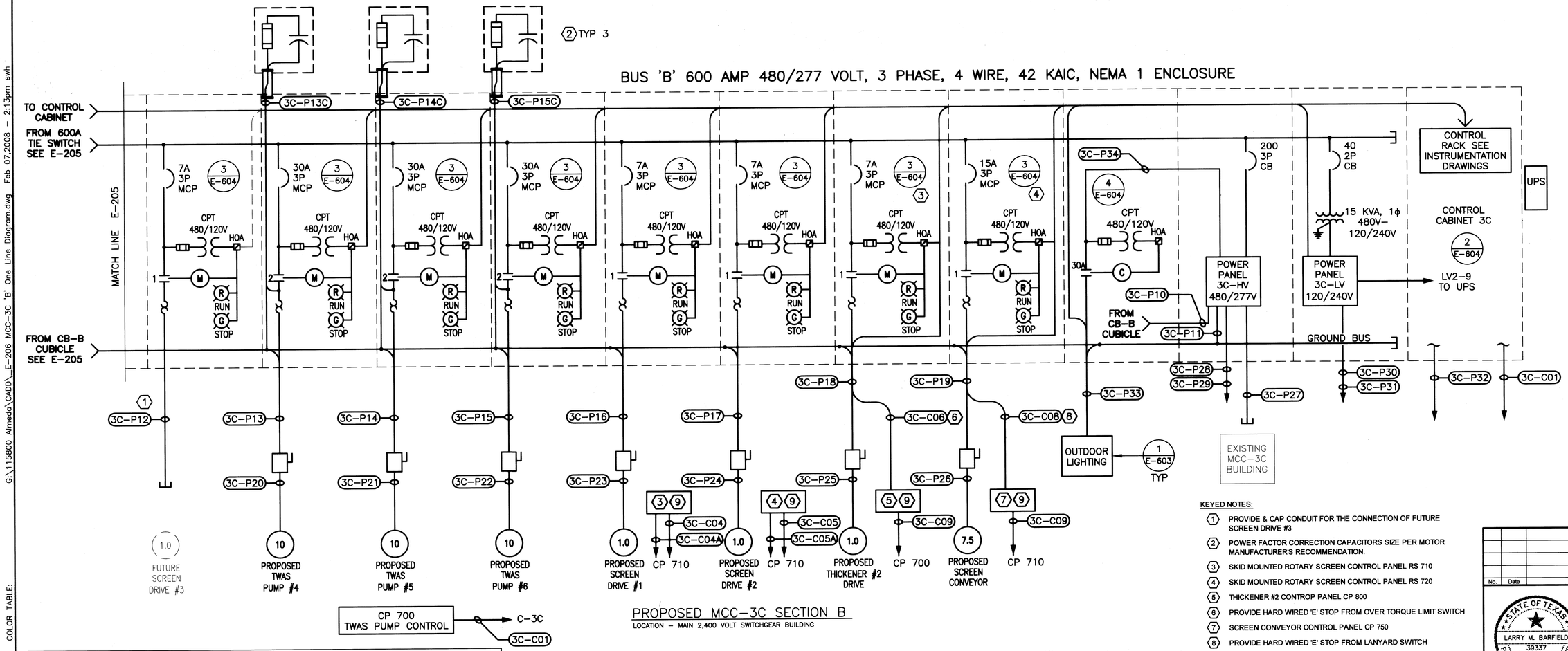

PROPOSED MCC-3C SECTION B

LOCATION - MAIN 2,400 VOLT SWITCHGEAR BUILDING

MCC - 3C CONDUIT and CABLE SCHEDULE 2 OF 3

CONDUIT TAG No.	CABLE SIZE & QUANTITY	CONDUIT SIZE	VOLTAGE	FROM	TO	COMMENTS/REMARKS
3C-P10	#4	MCC INTERNAL	GND POTENTIAL	MCC NEUTRAL BAR	POWER PANEL 3C-HV NEUTRAL BAR	PANEL 3C-HV NEUTRAL CONDUCTOR, INTERNAL TO MCC
3C-P11	#4	MCC INTERNAL	GND POTENTIAL	POWER PANEL 3C-HV GROUND BAR	MCC GROUND BAR	PANEL 3C-HV NEUTRAL GROUND CONDUCTOR, INTERNAL TO MCC
3C-P12	SEE 3C-P09	1-1/2" PVC IN DUCTBANK	480	SCREEN DRIVE #3 STARTER	SCREEN DRIVE #3 FLD DISCONNECT SW	CONDUIT ONLY AT THIS TIME SHARE WITH 3C-P09
3C-P13	3 x #8, #10 GND	1-1/2" PVC IN DUCTBANK	480	TWAS PUMP #4 STARTER	TWAS PUMP #4 FIELD DISCONNECT SW	
3C-P14	3 x #8, #10 GND	1-1/2" PVC IN DUCTBANK	480	TWAS PUMP #5 STARTER	TWAS PUMP #5 FIELD DISCONNECT SW	
3C-P15	3 x #8, #10 GND	1-1/2" PVC IN DUCTBANK	480	TWAS PUMP #6 STARTER	TWAS PUMP #6 FIELD DISCONNECT SW	
3C-P13C	3 x #8, #10 GND	3/4" NIPPLE	480	TWAS PUMP #4 STARTER	P.F. CORRECTION CAPACITOR	
3C-P14C	3 x #8, #10 GND	3/4" NIPPLE	480	TWAS PUMP #5 STARTER	P.F. CORRECTION CAPACITOR	
3C-P15C	3 x #8, #10 GND	3/4" NIPPLE	480	TWAS PUMP #6 STARTER	P.F. CORRECTION CAPACITOR	
3C-P16	9 x #10, #10 GND 4 x #12 CONTROL WIRES*	1-1/2" PVC IN DUCTBANK WITH #10 GND COMMON	480	SCREEN DRIVE #1 STARTER	SCREEN DRIVE #1 FLD DISCONNECT SW	SHARE 1-1/2" CONDUIT IN DUCTBANK * CONTROL WIRES FROM THICKENER DRIVE HIGH TORQUE SWITCH TO MCC-3C STARTER BUCKET FOR HARD WIRED 'E' STOP.
3C-P17			480	SCREEN DRIVE #2 STARTER	SCREEN DRIVE #2 FLD DISCONNECT SW	
3C-P18			480	THICKENER #2 DRIVE STARTER	THICKENER #2 DRIVE FLD DISCONNECT SW	
3C-P19	SEE 3C-P28,P29	1-1/2" PVC IN DUCTBANK	480 & 120 CONTROL	SCREEN CONVEYOR STARTER	SCREEN CONVEYOR DISCONNECT SW	* INCLUDES E-STOP CONTROL WIRES FROM LANYARD SWITCHES. SHARE CONDUIT WITH 3C-P28,P29
3C-P20	3 x #8, #10 GND	3/4"	480	TWAS PUMP #4 FIELD DISCONNECT SW	TWAS PUMP #4	
3C-P21	3 x #8, #10 GND	3/4"	480	TWAS PUMP #5 FIELD DISCONNECT SW	TWAS PUMP #5	
3C-P22	3 x #8, #10 GND	3/4"	480	TWAS PUMP #6 FIELD DISCONNECT SW	TWAS PUMP #6	
3C-P23	3 x #12, #12 GND	3/4"	480	SCREEN DRIVE #1 FLD DISCONNECT SW	SCREEN DRIVE #1	
3C-P24	3 x #12, #12 GND	3/4"	480	SCREEN DRIVE #2 FLD DISCONNECT SW	SCREEN DRIVE #2	
3C-P25	3 x #12, #12 GND	3/4"	480	THICKENER #2 DRIVE FLD DISCONNECT SW	THICKENER #2 DRIVE	
3C-P26	3 x #12, #12 GND	3/4"	480	SCREEN CONVEYOR DISCONNECT SW	SCREEN CONVEYOR	

MCC - 3C CONDUIT and CABLE SCHEDULE 3 OF 3

CONDUIT TAG No.	CABLE SIZE & QUANTITY	CONDUIT SIZE	VOLTAGE	FROM	TO	COMMENTS/REMARKS
3C-P27	2 x #4, #8 GND (FUTURE)	1-1/2"	480 1Ø PHASE	PANEL 3C-HV	OLD MCC-3C BLDG 15KVA XFORM	CONDUIT ONLY AT THIS TIME
3C-P28	3 x#10, 6 x#12, #10 GND 4 x#12 CONTROL WIRES *	SHARE 1-1/2" PVC IN DUCTBANK WITH 3C-P19	480 & 120 CONTROL	PANEL 3C-HV	MOV FV 711	* INCLUDES E-STOP CONTROL WIRES FROM LANYARD SWITCHES. SHARE CONDUIT WITH 3C-P19
3C-P29				PANEL 3C-HV	MOV FV 721	
3C-P30	2 x #8,	1-1/2" PVC IN DUCTBANK #8 GND COMMON TO ALL	120	PANEL 3C-LV	LIGHT STANCHIONS	120 VOLT POWER FOR UTILITY OUTLETS
3C-P31	1 x #12 #12 NEUTRAL		120	PANEL 3C-LV	SCREENING FACILITY CONTROL CABINET CP 710	120 VOLT POWER FOR LUBRICATION PUMPS AND SOLENOIDS
3C-P32	2 x #12 2 #12 NEUTRALS		120 VOLT UPS POWER	MCC-3C CONTROL CABINET CP 3C	ONE CIRCUIT EACH TO CP 700 & CP 710	120 VOLT UPS POWER FOR SCADA I/O EQUIPMENT ONLY
3C-P33	1 x #12, #12 NEUTRAL		277	MCC-3C LIGHTING CONTACTOR	OUTSIDE LIGHTS	OUTSIDE LIGHTS ON SCREENING AND THICKENER STRUCTURES.
3C-P34	3 x #12, #12 NEUTRAL	MCC INTERNAL	480/277	PANEL 3C-HV	MCC-3C LIGHTING CONTACTOR	
3C-C01	PROFIBUS	1-1/2"	DIGITAL DATA	PROFIBUS CABLE IS 'DAISY CHAIN' CONNECTED FROM CP TWAS TO CP 700 TO CP 710 TO CP 3C. SEE SHEET I-101		
3C-C02	4 x #12	3/4"	120 VOLT	MCC-3C THICKENER #1 STARTER BUCKET	CP XXX	THICKENER #1 HARD WIRED OVER TORQUE 'E' STOP FUTURE
3C-C03	10 PAIR #16	1-1/2"	CONTROL SIGNALS	CP XXX	CP TWAS	THICKENER #1 CONTROL SIGNALS FUTURE
3C-C04	12 PAIR #16	1-1/2"	CONTROL SIGNALS	RS 710 SCREEN PACKAGE #1	CP 710	ROTARY SCREEN CONTROLS
3C-C04A	6 x #14	3/4"	120 VOLT	RS 710 SCREEN PACKAGE #1	CP 710	120 VOLT POWER FOR SOLENOIDS AND LUBRICATION PUMP
3C-C05	12 PAIR #16	1-1/2"	CONTROL SIGNALS	RS 720 SCREEN PACKAGE #2	CP 710	ROTARY SCREEN CONTROLS
3C-C05A	6 x #14	3/4"	120 VOLT	RS 720 SCREEN PACKAGE #2	CP 710	120 VOLT POWER FOR SOLENOIDS AND LUBRICATION PUMP
3C-C06	4 x #12	3/4"	120 VOLT	MCC-3C THICKENER #2 STARTER BUCKET	CP 800	THICKENER #2 HARD WIRED OVER TORQUE 'E' STOP
3C-C07	10 PAIR #16	1-1/2"	CONTROL SIGNALS	CP 800	CP 700	THICKENER #2 CONTROL SIGNALS
3C-C08	4 x #12	3/4"	120 VOLT	MCC-3C SCREEN CONVEYOR STARTER BUCKET	CP 750	SCREEN CONVEYOR HARD WIRED 'E' STOP LANYARD SWITCH
3C-C09	10 PAIR #16	1-1/2"	CONTROL SIGNALS	CP 750	CP 710	SCREEN CONVEYOR CONTROL SIGNALS
3C-C10	2 x #14, #14 GND	3/4"	120 VOLT	CONVEYOR WASH DOWN SOLENOID	CP 710	

NOTES:

3C-PXX DENOTES POWER
3C-CXX DENOTES SCADA

KEYED NOTES:

1. PROVIDE & CAP CONDUIT FOR THE CONNECTION OF FUTURE SCREEN DRIVE #3
2. POWER FACTOR CORRECTION CAPACITORS SIZE PER MOTOR MANUFACTURER'S RECOMMENDATION.
3. SKID MOUNTED ROTARY SCREEN CONTROL PANEL RS 710
4. SKID MOUNTED ROTARY SCREEN CONTROL PANEL RS 720
5. THICKENER #2 CONTROP PANEL CP 800
6. PROVIDE HARD WIRED 'E' STOP FROM OVER TORQUE LIMIT SWITCH
7. SCREEN CONVEYOR CONTROL PANEL CP 750
8. PROVIDE HARD WIRED 'E' STOP FROM LANYARD SWITCH
9. LOCAL CONTROL PANEL PROVIDED BY EQUIPMENT MANUFACTURER. CONTROLS CONNECT TO SCADA SYSTEM.

No.	Date	Revisions	App.

STATE OF TEXAS
LARRY M. BARFIELD
39337
REGISTERED PROFESSIONAL ENGINEER
2-8-08

klotz associates

Binkley & Barfield consulting engineers
1710 Seamist Drive
Houston, Texas 77008-3189
(713) 869-3433

SURVEYED BY: GEOSOLUTIONS | FIELD BOOK NO. : N/A

CITY OF HOUSTON
DEPARTMENT OF PUBLIC WORKS AND ENGINEERING

ALMEDA SIMS WWTP & SPF IMPROVEMENTS PACKAGE I

ELECTRICAL - MCC-3C ONE LINE DIAGRAM & DETAILS, SHEET 2 OF 2

AS BUILT

FILE NO:	WW4903
WBS: R-000298-0004-4	
DRAWING SCALE	
NTS	
CITY OF HOUSTON PM	
IRAJ RANJBAR, P.E.	
DWG NO. :	E-206
SHEET NO.	92 OF 109

PUBLIC WORKS AND ENGINEERING
ACCEPTED & FILED
44488
CITY DRAWING NUMBER
HOUSTON, TEXAS

G:\15800 Almeda Sims Package I\CADD\AS BUILT_E-300 Pump Station Area.dwg Nov 03,2011 - 10:29am rpd

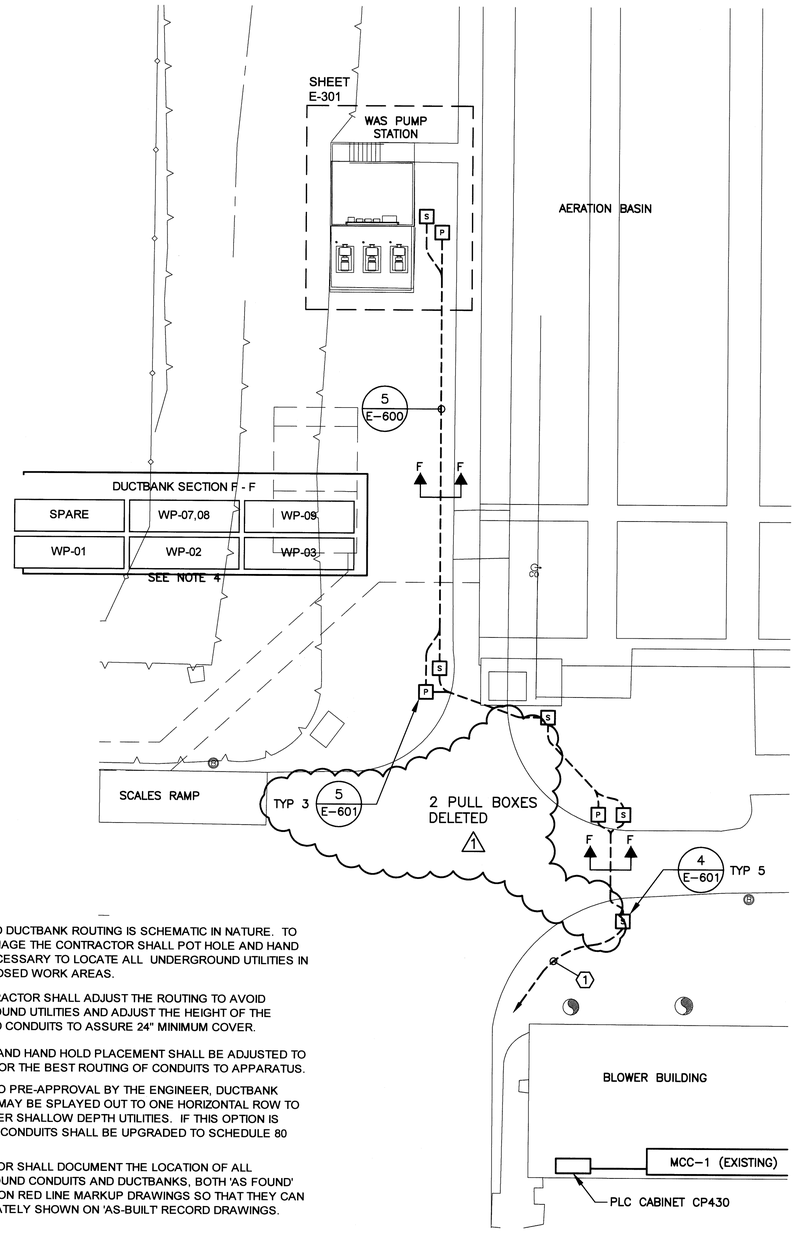

WAS PUMP CONDUIT and CABLE SCHEDULE

CONDUIT TAG No.	CABLE TYPE & QUANTITY	CONDUIT SIZE	VOLTAGE	FROM	TO	COMMENTS/REMARKS
WP-01	3 x #6, #10 GND	1-1/2" PVC IN DUCTBANK *	480	MCC-1	WAS PUMP #1 DISCONNECT SWITCH	* COMMON 1-1/2" PVC COATED RGS CONDUIT FROM HAND HOLE, BRANCHING OFF TO EACH OF THE THREE WAS PUMP DISCONNECT SWITCHES.
WP-02	3 x #6, #10 GND	1-1/2" PVC IN DUCTBANK *	480	MCC-1	WAS PUMP #2 DISCONNECT SWITCH	
WP-03	3 x #6, #10 GND	1-1/2" PVC IN DUCTBANK *	480	MCC-1	WAS PUMP #3 DISCONNECT SWITCH	
WP-04	3 x #6, #10 GND	1" PVC COATED RGS & LIQUIDTIGHT	480	WAS PUMP #1 DISCONNECT SWITCH	WAS PUMP #1	
WP-04A	4 x #14	3/4" PVC COATED RGS & LIQUIDTIGHT	CONTROL VOLTAGE	WAS PUMP #1	WAS PUMP CONTROL CABINET CP 600	RTD TEMPERATURE SENSORS
WP-05	3 x #6, #10 GND	1" PVC COATED RGS & LIQUIDTIGHT	480	WAS PUMP #2 DISCONNECT SWITCH	WAS PUMP #2	
WP-05A	4 x #14	3/4" PVC COATED RGS & LIQUIDTIGHT	CONTROL VOLTAGE	WAS PUMP #2	WAS PUMP CONTROL CABINET CP 600	RTD TEMPERATURE SENSORS
WP-06	3 x #6, #10 GND	1" PVC COATED RGS & LIQUIDTIGHT	480	WAS PUMP #3 DISCONNECT SWITCH	WAS PUMP #3	
WP-06A	4 x #14	3/4" PVC COATED RGS & LIQUIDTIGHT	CONTROL VOLTAGE	WAS PUMP #3	WAS PUMP CONTROL CABINET CP 600	RTD TEMPERATURE SENSORS
WP-07	3 x #10, 1 EA HOT, NEUTRAL & GND	1-1/2" PVC IN DUCTBANK & 1" PVC COATED RGS	120 UPS CIRCUIT	BLOWER BLDG PLC CONT. CABINET 120 V	WAS PUMP CONTROL CABINET CP 600	INSTALL THESE TWO CIRCUITS IN THE SAME CONDUIT WITH ONE COMMON #10 GROUND WIRE. SEE DWG E-604, DETAIL 2.
WP-08	3 x #10, 1 EA HOT, NEUTRAL & GND		120	BLOWER BLDG PLC CONT. CABINET UPS	WAS PUMP CONTROL CABINET CP 600	
WP-09	PROFIBUS CABLE	**	DIGITAL DATA	BLOWER BUILDING PLC CABINET CP 430	WAS PUMP CONTROL CABINET CP 600	** 1-1/2" PVC IN DUCTBANK & 1" PVC COATED RGS
WP-10	VENDOR CABLE	3/4" PVC COATED RGS	CONTROL VOLTAGE	FLOW METER TRANSDUCER	WAS PUMP CONTROL CABINET CP 600	
WP-11	2 PAIR #16	3/4" PVC COATED RGS	CONTROL VOLTAGE	LEVEL DETECTOR	WAS PUMP CONTROL CABINET CP 600	

NOTES:

ALL ABOVE GRADE CONDUITS SHALL BE PVC COATED RGS.

BELOW GRADE CONDUITS SHALL BE SCHEDULE 40 PVC EXCEPT FOR CONDUITS UNDER DEDICATED ROADWAYS WHICH SHALL BE SCHEDULE 80 PVC.

GENERAL NOTES:

1. PROPOSED DUCTBANK ROUTING IS SCHEMATIC IN NATURE. TO AVOID DAMAGE THE CONTRACTOR SHALL POT HOLE AND HAND DIG AS NECESSARY TO LOCATE ALL UNDERGROUND UTILITIES IN THE PROPOSED WORK AREAS.
2. THE CONTRACTOR SHALL ADJUST THE ROUTING TO AVOID UNDERGROUND UTILITIES AND ADJUST THE HEIGHT OF THE PROPOSED CONDUITS TO ASSURE 24" MINIMUM COVER.
3. MANHOLE AND HAND HOLD PLACEMENT SHALL BE ADJUSTED TO PROVIDE FOR THE BEST ROUTING OF CONDUITS TO APPARATUS.
4. SUBJECT TO PRE-APPROVAL BY THE ENGINEER, DUCTBANK CONDUITS MAY BE SPLAYED OUT TO ONE HORIZONTAL ROW TO CROSS OVER SHALLOW DEPTH UTILITIES. IF THIS OPTION IS USED, THE CONDUITS SHALL BE UPGRADED TO SCHEDULE 80 PVC.
5. CONTRACTOR SHALL DOCUMENT THE LOCATION OF ALL UNDERGROUND CONDUITS AND DUCTBANKS, BOTH 'AS FOUND' AND NEW, ON RED LINE MARKUP DRAWINGS SO THAT THEY CAN BE ACCURATELY SHOWN ON 'AS-BUILT' RECORD DRAWINGS.

KEYED NOTES:

(1) CONTRACTOR SHALL DETERMINE BEST ROUTE FOR CONDUITS TO MCC-1 AND PLC CABINET CP 430. THE DUCTBANK ROUTE MAY BE ADJUSTED ACCORDINGLY.

NOTE: ANY EXISTING CONDUITS IN THE BLOWER BUILDING THAT ARE VACATED DURING THE DEMOLITION OF THE EXISTING WAS PUMP STATION MAY BE USED FOR THE INSTALLATION OF THE NEW WIRING PROVIDED THEY ARE OF ADEQUATE SIZE PER THE NEC.

AS BUILT

No.	Date	Revisions	App.
1	11/03/11	DELETE 2 PULL BOXES – AS BUILT	L.C.C.

STATE OF TEXAS
LARRY M. BARFIELD
39337
REGISTERED
PROFESSIONAL ENGINEER
2-15-12

klotz associates

Binkley & Barfield
consulting engineers
1710 Seamist Drive
Houston, Texas 77008-3189
(713) 869-3433

SURVEYED BY: GEOSOLUTIONS | FIELD BOOK NO. : N/A

CITY OF HOUSTON
DEPARTMENT OF PUBLIC WORKS AND ENGINEERING

ALMEDA SIMS WWTP & SPF IMPROVEMENTS PACKAGE I

PROPOSED WAS PUMP STATION ENLARGED ELECTRICAL SITE PLAN 1 OF 2

FILE NO:	WW4903
WBS:	R-000298-0004-4
DRAWING SCALE	1/16" = 1'-0"
CITY OF HOUSTON PM	IRAJ RANJBAR, P.E.
DWG NO. :	E-300
SHEET NO.	93 OF 109

PUBLIC WORKS AND ENGINEERING
ACCEPTED & FILED
CITY DRAWING NUMBER
HOUSTON, TEXAS

COLOR TABLE:

ORIGINAL SCALE IN INCHES FOR REDUCED PLANS
0 1 2 3

G:\115800 Almeda\CADD\E-301 WAS Pump Enlarged Site Plan.dwg Feb 07,2008 - 2:14pm swh

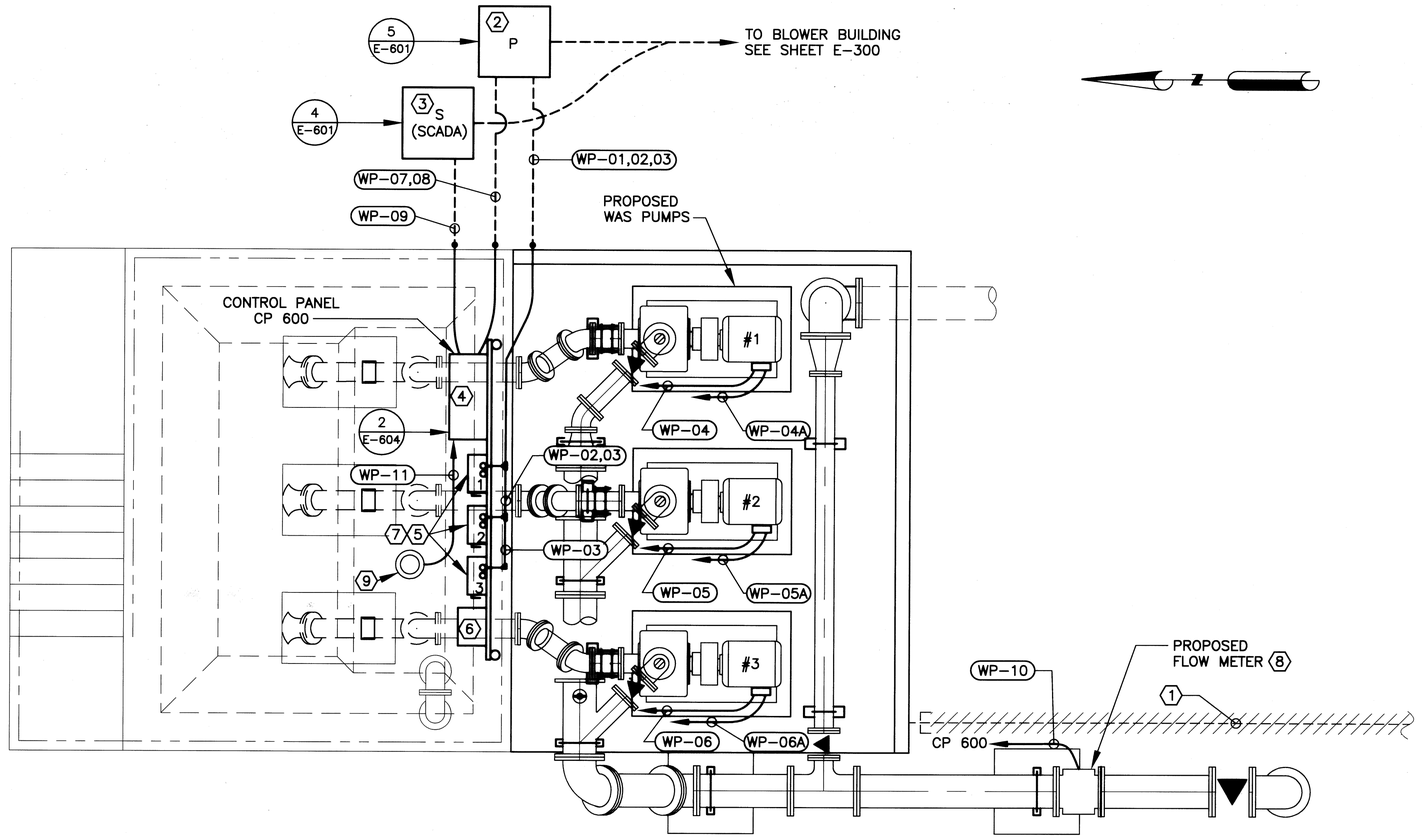

GENERAL NOTES:

1. PROPOSED DUCTBANK ROUTING IS SCHEMATIC IN NATURE. TO AVOID DAMAGE THE CONTRACTOR SHALL POT HOLE AND HAND DIG AS NECESSARY TO LOCATE ALL UNDERGROUND UTILITIES IN THE PROPOSED WORK AREAS.
2. THE CONTRACTOR SHALL ROUTE CONDUITS TO AVOID INTERFERENCE WITH MAINTENANCE AND/OR REPLACEMENT OF MECHANICAL AND PIPING SYSTEM COMPONENTS.
3. CONTRACTOR SHALL DOCUMENT THE LOCATION OF ALL UNDERGROUND CONDUITS AND DUCTBANKS, BOTH 'AS FOUND' AND NEW, ON RED LINE MARKUP DRAWINGS SO THAT THEY CAN BE ACCURATELY SHOWN ON 'AS-BUILT' RECORD DRAWINGS.

KEYED NOTES:

1. EXISTING DUCTBANK TO MCC-1 IN AERATION BLOWER BUILDING. CONDUITS STUB UP BY EDGE OF EXISTING SLAB. REMOVE ALL WIRING BACK TO MCC-1. UNCOVER AND CUT BACK DUCTBANK BELOW GRADE. CAP CONDUITS AND ABANDON IN PLACE.
2. POWER HAND HOLE FOR MOTOR FEEDER CABLES FROM MCC-1 AND CONTROL POWER CABLES FROM BLOWER BUILDING SCADA UPS. EXTEND CONDUITS TO PROPOSED SAFETY SWITCHES AND CONTROL PANEL.
3. SCADA HAND HOLE. EXTEND CONDUIT TO PROPOSED CONTROL CABINET CP 600.
4. EXISTING CONTROL PANEL TO BE REMOVED AND REPLACED. MOUNT NEW CONTROL PANEL ON EXISTING RACK.
5. EXISTING DISCONNECT SWITCHES FOR SUBMERSIBLE PUMPS TO BE REMOVED AND REPLACED
6. EXISTING LEVEL CONTROL TO BE DEMOLISHED. INTEGRATE NEW LEVEL CONTROL INTO PROPOSED CONTROL CABINET.
7. PROPOSED WAS PUMP DISCONNECT SWITCHES. 60 AMP, 480 VOLT, 3Ø, NON-FUSED, NEMA 4X STAINLESS STEEL
8. PROPOSED FLOW METER. PROVIDE CONDUIT AND CABLING TO PROPOSED CONTROL CABINET CP 600.
9. PROPOSED LEVEL DETECTOR. PROVIDE CONDUIT AND CABLING TO PROPOSED CONTROL CABINET CP 600. SEE SHEET M-102, DETAIL 1 FOR PHYSICAL INSTALLATION DETAILS.

WAS PUMP CONDUIT and CABLE SCHEDULE

CONDUIT TAG No.	CABLE TYPE & QUANTITY	CONDUIT SIZE	VOLTAGE	FROM	TO	COMMENTS/REMARKS
WP-01	3 x #6, #10 GND	1-1/2" PVC IN DUCTBANK *	480	MCC-1	WAS PUMP #1 DISCONNECT SWITCH	* COMMON 1-1/2" PVC COATED RGS CONDUIT FROM HAND HOLE, BRANCHING OFF TO EACH OF THE THREE WAS PUMP DISCONNECT SWITCHES.
WP-02	3 x #6, #10 GND	1-1/2" PVC IN DUCTBANK *	480	MCC-1	WAS PUMP #2 DISCONNECT SWITCH	
WP-03	3 x #6, #10 GND	1-1/2" PVC IN DUCTBANK *	480	MCC-1	WAS PUMP #3 DISCONNECT SWITCH	
WP-04	3 x #6, #10 GND	1" PVC COATED RGS & LIQUIDTIGHT	480	WAS PUMP #1 DISCONNECT SWITCH	WAS PUMP #1	
WP-04A	4 x #14	3/4" PVC COATED RGS & LIQUIDTIGHT	CONTROL VOLTAGE	WAS PUMP #1	WAS PUMP CONTROL CABINET CP 600	RTD TEMPERATURE SENSORS
WP-05	3 x #6, #10 GND	1" PVC COATED RGS & LIQUIDTIGHT	480	WAS PUMP #2 DISCONNECT SWITCH	WAS PUMP #2	
WP-05A	4 x #14	3/4" PVC COATED RGS & LIQUIDTIGHT	CONTROL VOLTAGE	WAS PUMP #2	WAS PUMP CONTROL CABINET CP 600	RTD TEMPERATURE SENSORS
WP-06	3 x #6, #10 GND	1" PVC COATED RGS & LIQUIDTIGHT	480	WAS PUMP #3 DISCONNECT SWITCH	WAS PUMP #3	
WP-06A	4 x #14	3/4" PVC COATED RGS & LIQUIDTIGHT	CONTROL VOLTAGE	WAS PUMP #3	WAS PUMP CONTROL CABINET CP 600	RTD TEMPERATURE SENSORS
WP-07	3 x #10, 1 EA HOT, NEUTRAL & GND	1-1/2" PVC IN DUCTBANK & 1" PVC COATED RGS	120 UPS CIRCUIT	BLOWER BLDG PLC CONT. CABINET 120 V	WAS PUMP CONTROL CABINET CP 600	INSTALL THESE TWO CIRCUITS IN THE SAME CONDUIT WITH ONE COMMON #10 GROUND WIRE. SEE DWG E-604, DETAIL 2.
WP-08	3 x #10, 1 EA HOT, NEUTRAL & GND		120	BLOWER BLDG PLC CONT. CABINET UPS	WAS PUMP CONTROL CABINET CP 600	
WP-09	PROFIBUS CABLE	**	DIGITAL DATA	BLOWER BUILDING PLC CABINET CP 430	WAS PUMP CONTROL CABINET CP 600	** 1-1/2" PVC IN DUCTBANK & 1" PVC COATED RGS
WP-10	VENDOR CABLE	3/4" PVC COATED RGS	CONTROL VOLTAGE	FLOW METER TRANSDUCER	WAS PUMP CONTROL CABINET CP 600	
WP-11	2 PAIR #16	3/4" PVC COATED RGS	CONTROL VOLTAGE	LEVEL DETECTOR	WAS PUMP CONTROL CABINET CP 600	

NOTES:
ALL ABOVE GRADE CONDUITS SHALL BE PVC COATED RGS.

BELOW GRADE CONDUITS SHALL BE SCHEDULE 40 PVC EXCEPT FOR CONDUITS UNDER DEDICATED ROADWAYS WHICH SHALL BE SCHEDULE 80 PVC.

AS BUILT

COLOR TABLE:

ORIGINAL SCALE IN INCHES FOR REDUCED PLANS
0 1 2 3

No.	Date	Revisions	App.

STATE OF TEXAS
LARRY M. BARFIELD
39337
REGISTERED
PROFESSIONAL ENGINEER
12-8-08

klotz associates

Binkley & Barfield consulting engineers
1710 Seamist Drive
Houston, Texas 77008-3189
(713) 869-3433

SURVEYED BY: GEOSOLUTIONS | FIELD BOOK NO. : N/A

CITY OF HOUSTON
DEPARTMENT OF PUBLIC WORKS AND ENGINEERING

ALMEDA SIMS WWTP & SPF IMPROVEMENTS PACKAGE I

PROPOSED WAS PUMP STATION ENLARGED ELECTRICAL SITE PLAN 2 OF 2

FILE NO:	WW4903
WBS:	R-000298-0004-4
DRAWING SCALE	3/8" = 1'-0"
CITY OF HOUSTON PM	IRAJ RANJBAR, P.E.
DWG NO. :	E-301
SHEET NO.	94 OF 109

PUBLIC WORKS AND ENGINEERING
ACCEPTED & FILED
44488
CITY DRAWING NUMBER
HOUSTON, TEXAS

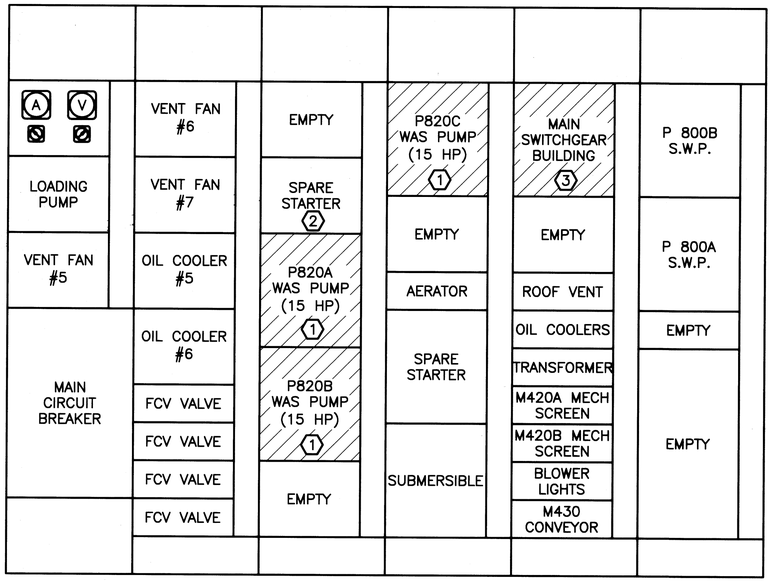

MCC–1 EXISTING CONFIGURATION

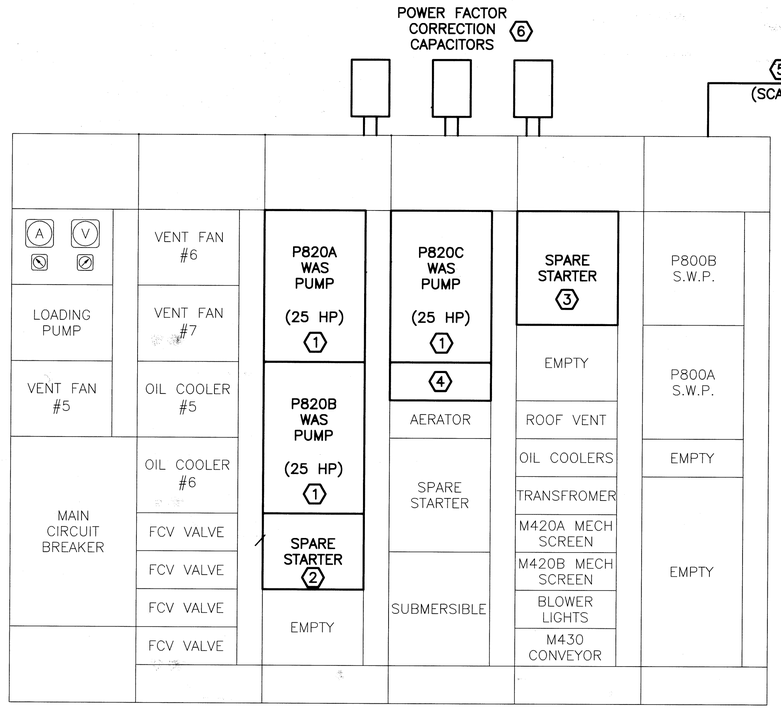

MCC–1 PROPOSED CONFIGURATION

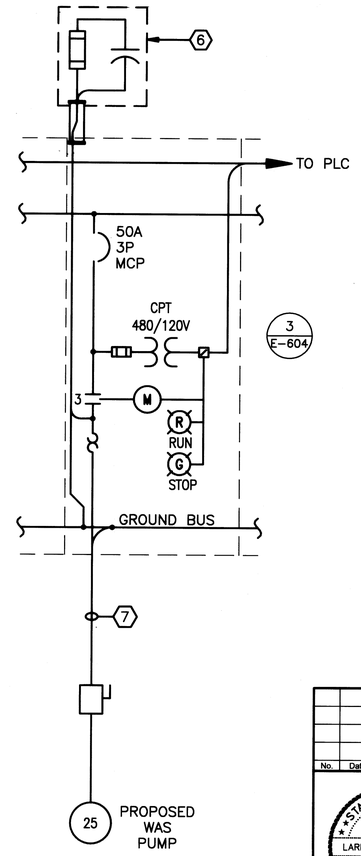

SIMPLIFIED ONE–LINE DIAGRAM TYPICAL 3

FVNR CONTROL DIAGRAM TYPICAL — 3 / E–604

GENERAL NOTES:

1. 3 EXISTING 15 HP SUBMERSIBLE WAS PUMPS ARE BEING REPLACED BY 25 HP PUMPS WITH ABOVE GRADE MOTORS.
2. MATCH MOTOR STARTER THERMAL OVERLOADS TO MOTOR NAMEPLATE CURRENT AS PER THE NEC.
3. INSTALL NEW DUCTBANK AND WIRING AS NOTED ON SHEETS E-300 AND E-301.

KEYED NOTES:

1. REMOVE AND REPLACE THREE SIZE 2 STARTER BUCKETS WITH SIZE 3 BUCKETS IN MCC LOCATIONS SHOWN. RETURN REMOVED BUCKETS TO COH OR DISPOSE OF AS DIRECTED. SEE REPLACEMENT MOTOR STARTER DETAILS - THIS DRAWING.
2. RELOCATE SPARE STARTER BUCKET TO LOCATION SHOWN
3. ONCE 'HOUSE LOADS' IN THE 2,400 VOLT SWITCHGEAR BUILDING HAVE BEEN MOVED TO MCC-3C, DISCONNECT AND REMOVE FEEDER CIRCUIT AND RESTORE SPARE STARTER TO ORIGINAL CONFIGURATION.
4. PROVIDE AND INSTALL A 1/2 SPACE (6") DOOR TO COVER OPENING. DOOR SHALL BE OEM TYPE TO MATCH EXISTING. BLANK PLATES OR CUTTING OF 12" DOOR TO FIT SHALL NOT BE ACCEPTED.
5. PROVIDE 1-1/2" CONDUIT TO PLC CABINET. INSTALL CONTROL WIRING TO WAS PUMP MOTOR STARTER BUCKETS. CONNECT PER INSTRUMENTATION AND ELECTRICAL SCHEMATIC DRAWINGS.
6. POWER FACTOR CORRECTION CAPACITORS SIZE PER MOTOR MANUFACTURER'S RECOMMENDATION.
7. SEE DWGS E-300 AND E-301 FOR ADDITIONAL INFORMATION.

REPLACEMENT MOTOR STARTER DETAILS.

FURNISH AND INSTALL THREE SIZE 3 MOTOR STARTER BUCKETS, EACH WITH THE FOLLOWING FEATURES AND ACCESSORIES:

1. 50 AMP MCP TYPE CIRCUIT BREAKER, GE TEC36050 WITH TECL36050 CURRENT LIMITER.
2. 120 VOLT CONTROL TRANSFORMER WITH BOTH PRIMARY AND SECONDARY FUSES.
3. ONE RUNNING (RED) AND ONE STOPPED (GREEN) PILOT LIGHT. PILOT LIGHT ASSEMBLIES SHALL BE LED, 120 VOLT, PRESS TO TEST
4. ONE 1-1/8" THREE POSITION SELECTOR SWITCH WITH 'HAND - OFF - AUTO' LEGEND PLATE. PROVIDE SWITCH WITH TWO N.O. CONTACTS.
5. MOTOR STARTER WITH 120 VOLT COIL AND THREE AUXILIARY CONTACTS, ONE N.O./N.C. WITH COMMON CONNECTION AND ONE N.O. DRY CONTACT.
6. PROVIDE THERMAL OVERLOAD BLOCK WITH ONE AUXILIARY N.O. DRY CONTACT.
7. PROVIDE AND INSTALL ONE OCTAL PLUG IN RELAY BASE AND "ICE CUBE" TYPE RELAY WITH 24 VDC COIL, POTTER & BRUMFIELD KRPA11DG24S OR EQUIVALENT, IN EACH REPLACEMENT MOTOR STARTER BUCKET.
8. PROVIDE EACH MOTOR STARTER BUCKET WITH TERMINAL STRIPS, WITH A MINIMUM OF 10 CONNECTION POINTS, TO FACILITATE WIRING TO PLC CONTROL SYSTEM.

AS BUILT

No.	Date	Revisions	App.

LARRY M. BARFIELD 39337 REGISTERED PROFESSIONAL ENGINEER 12-8-08

klotz associates

Binkley & Barfield consulting engineers
1710 Seamist Drive
Houston, Texas 77008-3189
(713) 869-3433

SURVEYED BY: GEOSOLUTIONS | FIELD BOOK NO. : N/A

CITY OF HOUSTON
DEPARTMENT OF PUBLIC WORKS AND ENGINEERING

ALMEDA SIMS WWTP & SPF IMPROVEMENTS PACKAGE I

ELECTRICAL
MCC-1 ELEVATIONS
EXISTING AND PROPOSED

FILE NO:	WW4903
WBS:	R–000298–0004–4
DRAWING SCALE	NO SCALE
CITY OF HOUSTON PM	IRAJ RANJBAR, P.E.
DWG NO. :	E–302
SHEET NO.	95 OF 109

ACCEPTED & FILED 44488 CITY DRAWING NUMBER HOUSTON, TEXAS

G:\115800 Almeda\CADD_E-302 MCC-1C Elevation.dwg Feb 07,2008 – 2:14pm swh

COLOR TABLE:

ORIGINAL SCALE IN INCHES FOR REDUCED PLANS
0 1 2 3

TO 12.47KV SWITCHGEAR SEE E-401

EXISTING DUCT BANK

EXISTING MH-1

EXISTING DUCT BANK & JUNCTION BOX

PROPOSED DUCT BANK

EXISTING PULL BOX S1

STORAGE SILO

STORAGE SILO

TRUCK LOADING BUILDING

PADMOUNT TRANSFORMERS

SHEET E-500

MCC-2C

PROPOSED MCC-2C

S2

SHEET E-501

MCC-2C

PROPOSED SLUDGE TRANSFER PUMP STATION SEE DWG E-501

SHEET E-502 MOTOR OPERATED VALVE POWER & CONTROL

PANEL MOV-N

PROPOSED SLUDGE HOLDING TANK

PROPOSED SLUDGE HOLDING TANK

(FUTURE) SLUDGE HOLDING TANK

TYP. 15

MCC-2C

PANEL MOV-S

SHEET E-503 MOTOR OPERATED VALVE POWER & CONTROL

KEYED NOTES:

1. INSTALL 2 X 2" CONDUITS FROM EXISTING JUNCTION BOX TO FIBER OPTIC PATCH PANEL. USE 24" X 24" X 8" PULL BOXES AND ELBOWS AS REQUIRED. DO NOT USE CONDUIT BODIES IN FIBER OPTIC CONDUIT RUNS.
2. INSTALL 12 STRAND FIBER OPTIC CABLE FROM CP 200 TO FIBER OPTIC PATCH PANEL. TERMINATE & TEST PER SPECIFICATIONS.

N

0 20 40

SCALE 1"=20'

No.	Date	Revisions	App.

STATE OF TEXAS
LARRY M. BARFIELD
39337
REGISTERED PROFESSIONAL ENGINEER

klotz associates

Binkley & Barfield consulting engineers
1710 Seamist Drive
Houston, Texas 77008-3189
(713) 869-3433

SURVEYED BY: GEOSOLUTIONS | FIELD BOOK NO. : N/A

CITY OF HOUSTON
DEPARTMENT OF PUBLIC WORKS AND ENGINEERING

ALMEDA SIMS WWTP & SPF IMPROVEMENTS PACKAGE I

BLOWER BUILDING & SLUDGE HOLDING TANK AREA ENLARGED ELECTRICAL SITE PLAN

FILE NO:	WW4903
WBS:	R-000298-0004-4
DRAWING SCALE	1" = 20'
CITY OF HOUSTON PM	IRAJ RANJBAR, P.E.
DWG NO. :	E-400
SHEET NO.	96 OF 109

PUBLIC WORKS AND ENGINEERING ACCEPTED & FILED 44488 CITY DRAWING NUMBER HOUSTON, TEXAS

AS BUILT

G:\115800 Almeda\CADD_E-400 Blr Bldg Lrg Site.dwg Feb 07,2008 - 2:14pm swh

COLOR TABLE:

ORIGINAL SCALE IN INCHES FOR REDUCED PLANS
0 1 2 3

G:\115800 Almeda\CADD_E-401 SPB One Line.dwg Feb 07,2008 - 2:14pm swh

COLOR TABLE:

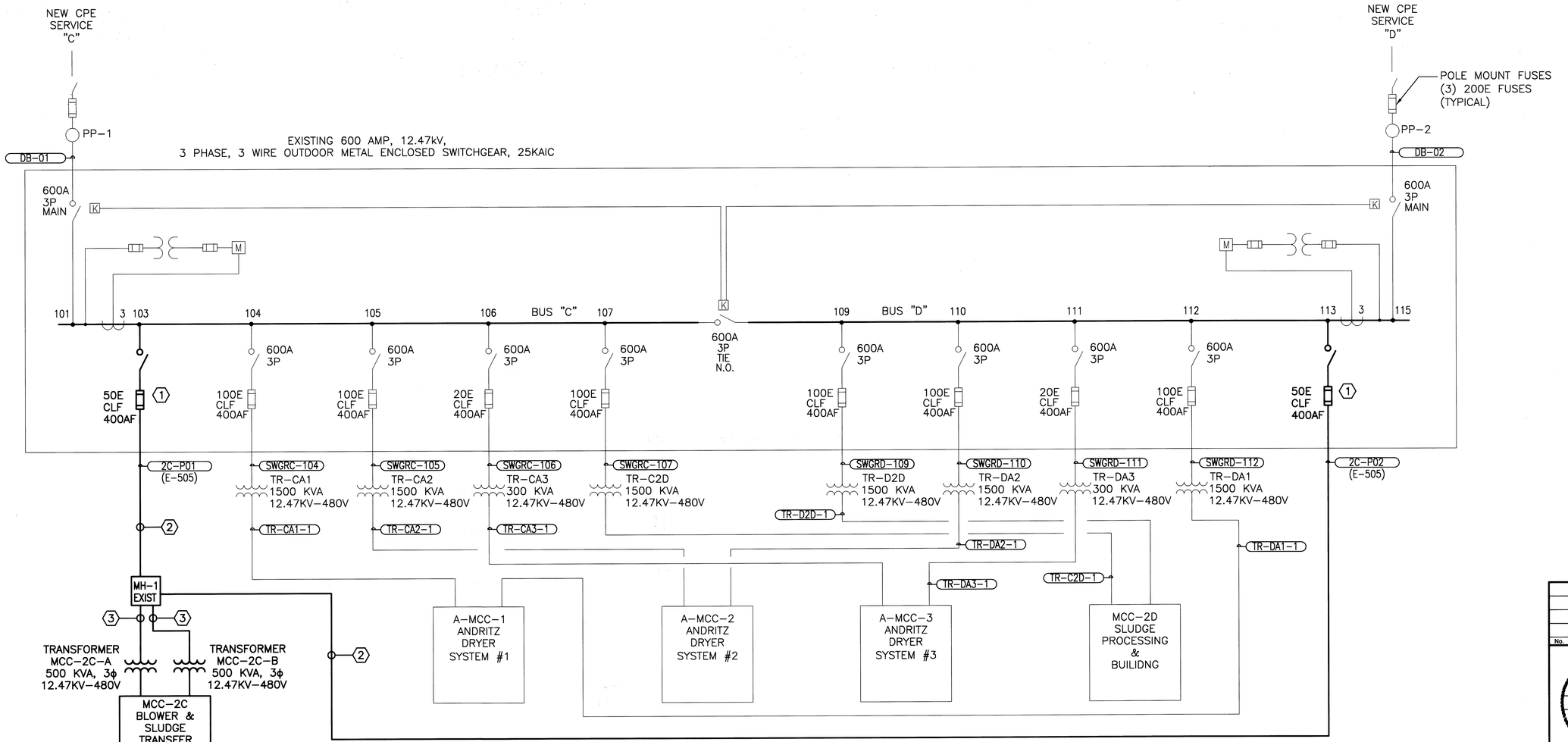

SPB SWITCHGEAR ONE-LINE DIAGRAM
NO SCALE

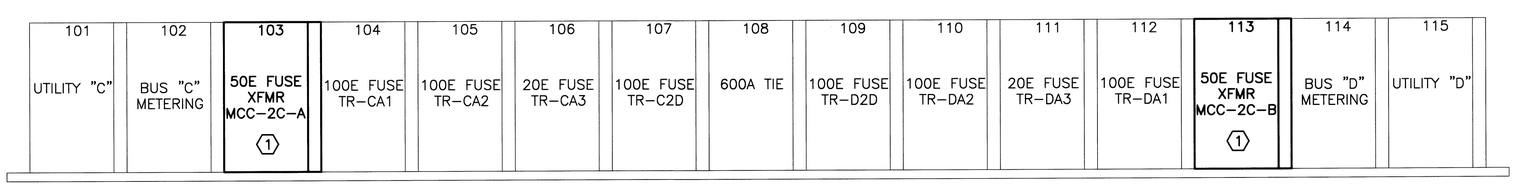

SPB SWITCHGEAR ELEVATION
NO SCALE

ORIGINAL SCALE IN INCHES FOR REDUCED PLANS: 0 1 2 3

12.47 KV DISTRIBUTION LOAD ANALYSIS		
ITEM	CONNECTED kVA	DEMAND kVA
MCC - 2D	1,124.8	1,074.9
ANDRITZ MCC #1	1,252.2	1,118.2
ANDRITZ MCC #2	1,252.2	1,118.2
ANDRITZ MCC #3	282.2	240.4
INSTRUMENTATION/CONTROLS	13.0	13.0
MCC - 2C	**595.9**	**595.9**
TOTAL kVA	**4,520.3**	**4,160.6**
DEMAND LOAD AMPS @ 12.47 kV		**209.3**

GENERAL NOTES:

1. COORDINATE NECESSARY OUTAGES TO FACILITATE WORK WITH THE CONSTRUCTION MANAGER, PLANT OPERATIONS AND THE PLANT ELECTRICIANS.
2. PROVIDE AND INSTALL 15 KV CABLE, PER SPECIFICATIONS, FROM SWITCHGEAR TO PADMOUNT TRANSFORMERS VIA MH-1. TERMINATE WITH APPROPRIATE STRESS CONES.

AS BUILT

KEYED

(1) CUBICLES PROVIDE BY OTHERS DURING PREVIOUS PROJECT. INSTALL APPROPRIATE FUSES AND TERMINATE CABLES.

(2) 4" CONDUITS AND MH-1 PROVIDED BY OTHERS DURING PREVIOUS PROJECT.

(3) PROVIDE 4" CONDUITS FROM MANHOLE MH-1 TO PADMOUNT TRANSFORMERS. SEE DRAWINGS E-400, & E-505 FOR FURTHER DETAILS

No.	Date	Revisions	App.

STATE OF TEXAS
LARRY M. BARFIELD
39337
REGISTERED PROFESSIONAL ENGINEER
2-8-08

klotz associates

Binkley & Barfield consulting engineers
1710 Seamist Drive
Houston, Texas 77008-3189
(713) 869-3433

SURVEYED BY: GEOSOLUTIONS | FIELD BOOK NO. : N/A

CITY OF HOUSTON
DEPARTMENT OF PUBLIC WORKS AND ENGINEERING

ALMEDA SIMS WWTP & SPF IMPROVEMENTS PACKAGE I

EXISTING SLUDGE PROCESSING BUILDING SUBSTATION 12.47KV ONE-LINE DIAGRAM

FILE NO:	WW4903
WBS: R-000298-0004-4	
DRAWING SCALE	
NTS	
CITY OF HOUSTON PM	
IRAJ RANJBAR, P.E.	
DWG NO. :	E-401
SHEET NO. 97 OF 109	

PUBLIC WORKS AND ENGINEERING ACCEPTED & FILED CITY DRAWING NUMBER HOUSTON, TEXAS

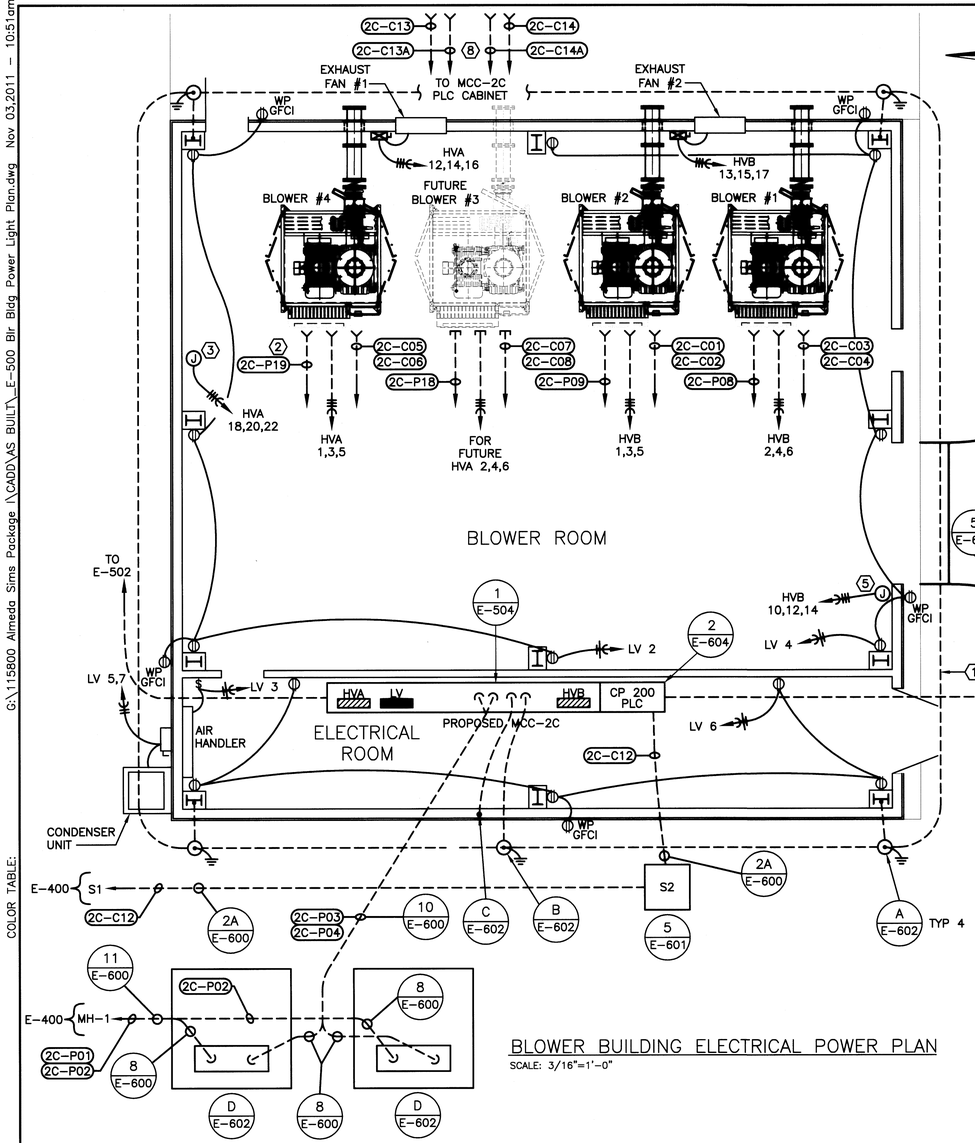

BLOWER BUILDING ELECTRICAL POWER PLAN

SCALE: 3/16"=1'-0"

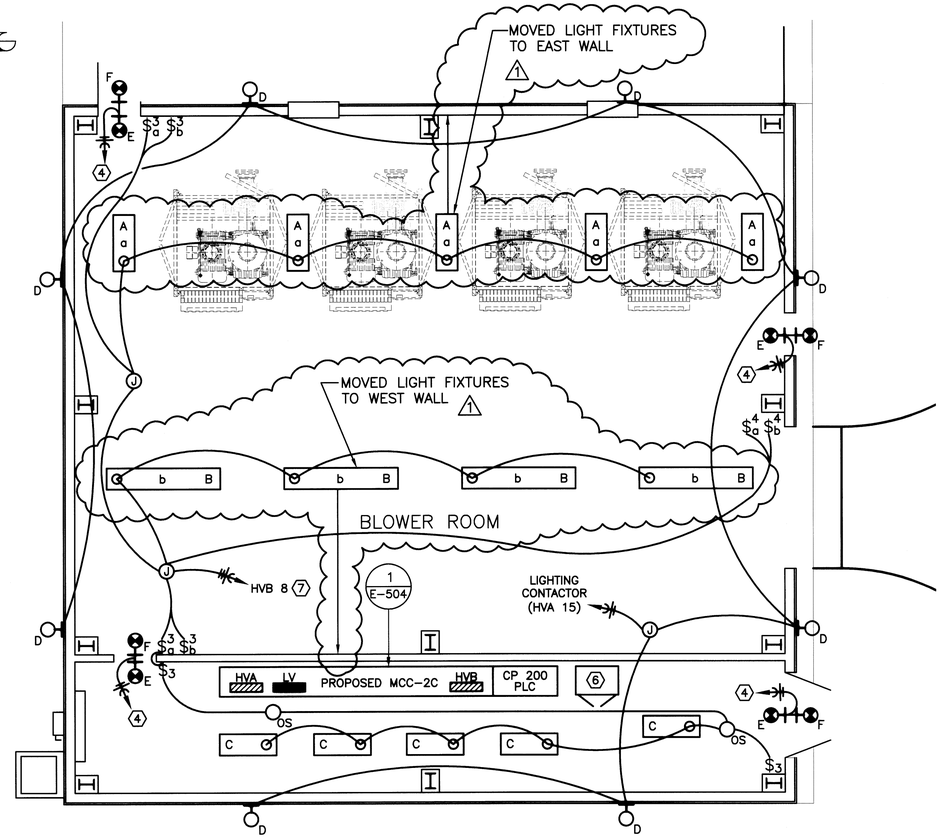

BLOWER BUILDING LIGHTING PLAN

SCALE: 3/16"=1'-0"

KEYED NOTES:

1. 2/0 GROUND RING, INSTALL 3' FROM BUILDING SLAB, 3' BELOW FINISHED GRADE. MAKE ALL SPLICES AND CONNECTIONS USING EXOTHERMIC WELDS.
2. COORDINATE ALL CONDUIT STUB-UPS AT BLOWER LOCATIONS WITH THE FOOTPRINT PROVIDED BY THE MANUFACTURER. RELOCATION OF IMPROPERLY PLACED CONDUITS AND REPAIRS TO THE BUILDING SLAB SHALL BE DONE AT NO ADDITIONAL COST TO THE OWNER.
3. COORDINATE THE LOCATION OF THE OVERHEAD CRANE CIRCUIT WITH THE CRANE INSTALLATION SUBCONTRACTOR.
4. CONNECT EMERGENCY/EXIT LIGHTS TO NEAREST 120 VOLT OUTLET CIRCUIT.
5. COORDINATE THE LOCATION OF THE ROLL UP DOOR CIRCUIT WITH THE DOOR INSTALLATION SUBCONTRACTOR.
6. PROVIDE EXTRA HEAVY DUTY COMBINATION STORAGE CABINET WITH ALL WELDED CONSTRUCTION, LYON MODEL #1121 (GRAINGER #5JL46) OR APPROVED EQUAL.
7. BLOWER ROOM PORTION OF LIGHTING CIRCUIT 'HVB 8' ROUTED THROUGH TIME CLOCK IN MCC-2C. SEE DRAWINGS E-504 AND E-505.
8. CONDUITS FROM TWO THERMAL DISPERSION FLOW METERS MOUNTED IN AIR PIPING, TO CP 200 CONTROL CABINET. SEE SHEET M-700 FOR INSTRUMENT MOUNTING LOCATION

GENERAL NOTES:

1. LOCATE RECEPTACLES IN THE BLOWER ROOM 36" 'AFF'.
2. LOCATE RECEPTACLES IN THE ELECTRICAL ROOM 18" 'AFF'.
3. LOCATE OUTDOOR RECEPTACLES 24" 'AFG"
4. OUTDOOR RECEPTACLES SHALL BE PROVIDED WITH 'RAINTIGHT WHEN IN USE' NEMA 3R COVERS. INTERMATIC WP1100C SERIES OR EQUAL
5. WHERE RECEPTACLES OR SWITCHES ARE SURFACE MOUNTED ON WALLS OR 'I' BEAMS, 4" x 4" SURFACE MOUNTED JUNCTION BOXES (1900 OR 4 SQUARE BOXES) WITH INDUSTRIAL DEVICE COVERS SHALL BE USED. MUD RINGS WITH FLUSH MOUNT COVERS SHALL NOT BE ACCEPTED.
6. RECEPTACLE AND SWITCH BOXES ON 'I' BEAMS SHALL BE LOCATED INSIDE THE BEAM POCKET ON THE WEB, NOT ON THE FACE OF THE BEAM.
7. LOCATE WALL SWITCHES 44" 'AFF'.
8. COORDINATE THE LOCATION OF THE LIGHT FIXTURES IN THE BLOWER ROOM WITH THE OVERHEAD CRANE INSTALLATION. ADJUST PROPOSED FIXTURE LOCATIONS AS NECESSARY SO THEY ARE NOT OVER RAILS OR OTHER STRUCTURAL FEATURES THAT WILL OBSCURE THEIR LIGHT.
9. MOUNT EXTERIOR LIGHTS APPROXIMATELY 22' 'AFG'

LIGHTING FIXTURE SCHEDULE

TYPE	QUANT	DESCRIPTION	MAKE & MODEL	MOUNTING	LAMPS #	LAMPS TYPE	VOLTS	REMARKS
A	5	HIGH BAY FLUORESCENT	LITHONIA DM 2 48HO 277 CW GLR	CHAIN	2	48HO 60W 800 MA	277	
B	4	HIGH BAY FLUORESCENT	LITHONIA DM 2 96HO 277 CW GLR	CHAIN	2	96HO 110W 800MA	277	
C	5	4', 2 LAMP FLUORESCENT WRAP AROUND	HUBBELL WW232T 277 4A OR EQUAL	CEILING	2	F32 T-8 MID WHITE	277	
D	8	WALL MOUNTED FLOOD LIGHT	LITHONIA WAL-PAK, TWH 250S 277 SCWA	WALL	1	250 WATT HPS	277	
E	4	**BATTERY BACKUP** EXIT/EMERGENCY LIGHT	LITHONIA OR EQUAL LHQM S W 1 120 N	WALL	2	LED EXIT INCAND. EMER.	120	SINGLE FACE
F	4	**BATTERY BACKUP** REMOTE HEAD EMERGENCY LIGHT	LITHONIA OR EQUAL IND616	WALL	2	INCANDESCENT EMERGENCY	6	

NOTES:
PROVIDE APPROPRIATE LAMPS, MOUNTING HARDWARE AND FITTINGS NECESSARY FOR A COMPLETE INSTALLATION.
ALL BALLAST OPERATED FIXTURES SHALL BE PROVIDED WITH INTERNAL FUSES.

AS BUILT

No.	Date	Revisions	App.
1	11/03/11	MOVED LIGHT FIXTURES – AS BUILT	L.C.C.

STATE OF TEXAS
LARRY M. BARFIELD
39337
REGISTERED PROFESSIONAL ENGINEER
11-15-12

klotz associates

Binkley & Barfield consulting engineers
1710 Seamist Drive
Houston, Texas 77008-3189
(713) 869-3433

SURVEYED BY: GEOSOLUTIONS | FIELD BOOK NO. : N/A

CITY OF HOUSTON
DEPARTMENT OF PUBLIC WORKS AND ENGINEERING

ALMEDA SIMS WWTP & SPF IMPROVEMENTS PACKAGE I

BLOWER BUILDING POWER AND LIGHTING PLANS

FILE NO:	WW4903
WBS:	R-000298-0004-4
DRAWING SCALE	AS SHOWN
CITY OF HOUSTON PM	IRAJ RANJBAR, P.E.
DWG NO. :	E-500
SHEET NO.	98 OF 109

PUBLIC WORKS AND ENGINEERING ACCEPTED & FILED CITY DRAWING NUMBER HOUSTON, TEXAS

ORIGINAL SCALE IN INCHES FOR REDUCED PLANS
0 1 2 3

COLOR TABLE:

G:\115800 Almeda Sims Package I\CADD\AS BUILT_E-500 Blr Bldg Power Light Plan.dwg Nov 03,2011 - 10:51am rpk

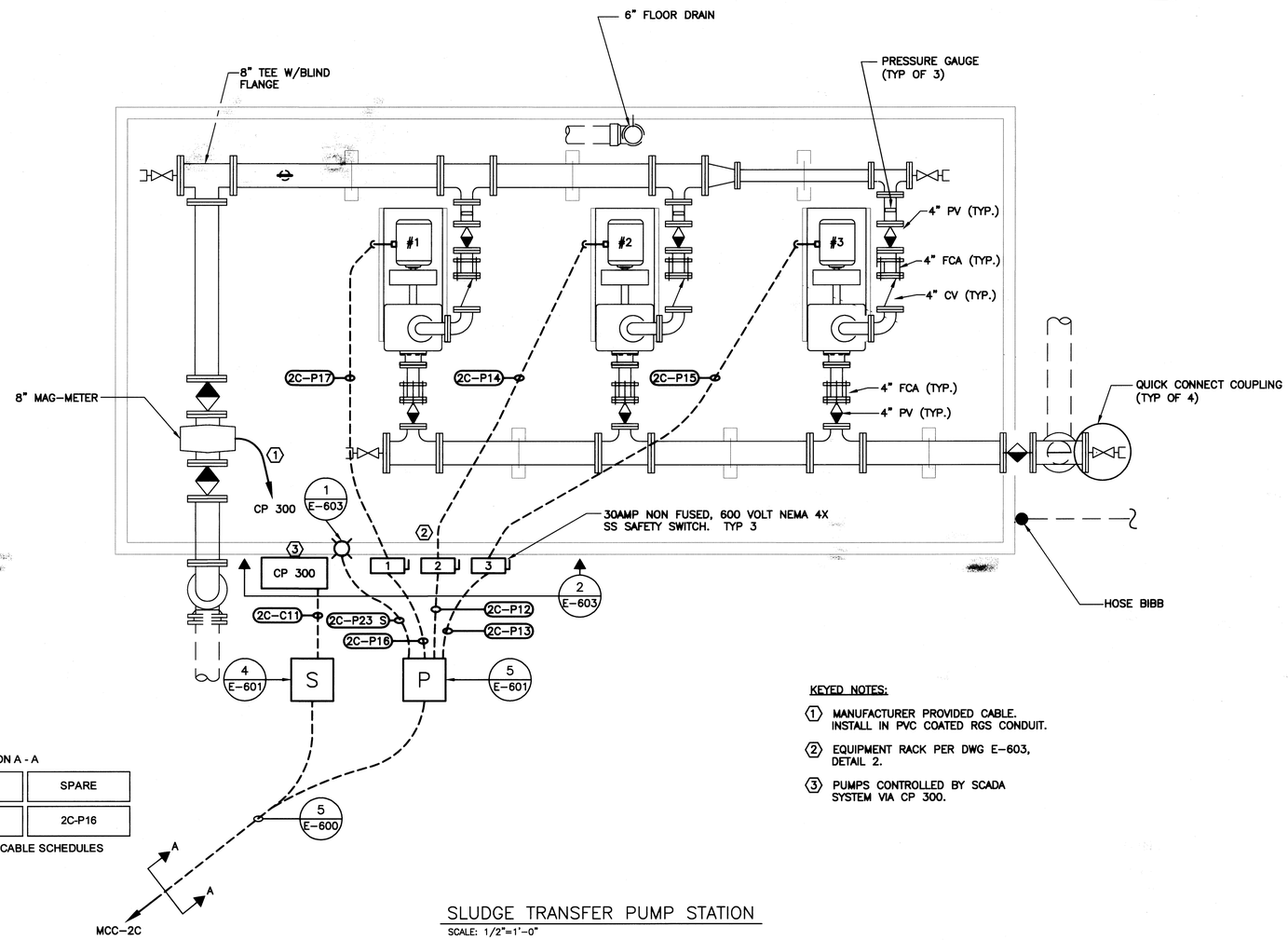

DUCTBANK SECTION A - A

2C-C11	2C-P23S	SPARE
2C-P12	2C-P13	2C-P16

SEE DWGS E-505 & E-506 FOR CABLE SCHEDULES

KEYED NOTES:

1. MANUFACTURER PROVIDED CABLE. INSTALL IN PVC COATED RGS CONDUIT.
2. EQUIPMENT RACK PER DWG E-603, DETAIL 2.
3. PUMPS CONTROLLED BY SCADA SYSTEM VIA CP 300.

SLUDGE TRANSFER PUMP STATION

SCALE: 1/2"=1'-0"

AS BUILT

No.	Date	Revisions	App.

STATE OF TEXAS
LARRY M. BARFIELD
39337
REGISTERED PROFESSIONAL ENGINEER
2-8-08

klotz associates

Binkley & Barfield
consulting engineers
1710 Seamist Drive
Houston, Texas 77008-3189
(713) 869-3433

SURVEYED BY: GEOSOLUTIONS | FIELD BOOK NO. : N/A

CITY OF HOUSTON
DEPARTMENT OF PUBLIC WORKS AND ENGINEERING

ALMEDA SIMS WWTP & SPF IMPROVEMENTS PACKAGE I

SLUDGE TRANSFER PUMP STATION ELECTRICAL PLAN

FILE NO:	WW4903
WBS:	R-000298-0004-4
DRAWING SCALE	AS SHOWN
CITY OF HOUSTON PM	IRAJ RANJBAR, P.E.
DWG NO. :	E-501
SHEET NO.	99 OF 109

PUBLIC WORKS AND ENGINEERING
ACCEPTED & FILED
44488
CITY DRAWING NUMBER
HOUSTON, TEXAS

G:\115800 Almeda\CADD_E-501 Trans Pump Sta.dwg Feb 07,2008 - 2:57pm swh

COLOR TABLE:

ORIGINAL SCALE IN INCHES FOR REDUCED PLANS
0 1 2 3

G:\115800 Almeda Sims Package 1\CADD\AS BUILT\E-502&3 Sludge Holding.dwg Nov 03,2011 - 1:14pm rpd

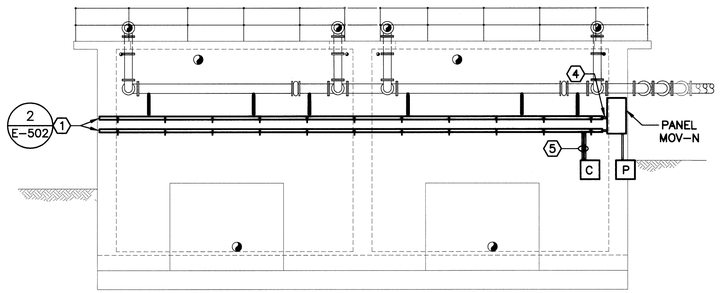

ELEVATION 1/E-502
SCALE: 1/8"=1'-0"

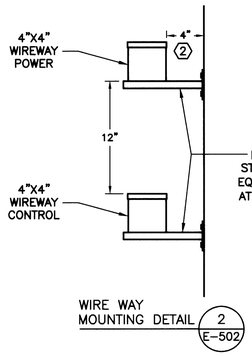

WIRE WAY MOUNTING DETAIL 2/E-502

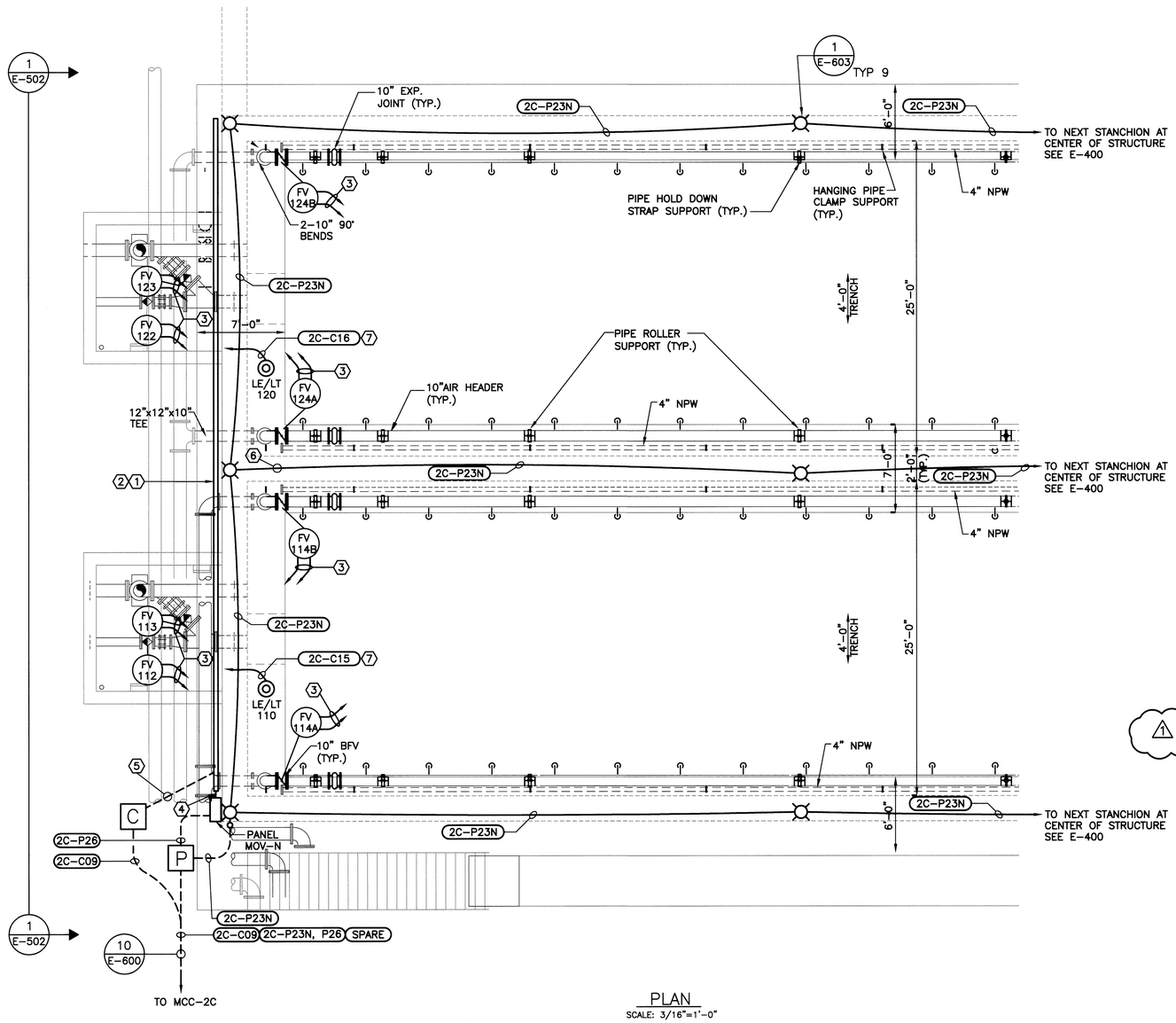

PLAN
SCALE: 3/16"=1'-0"

COLOR TABLE:

ORIGINAL SCALE IN INCHES
FOR REDUCED PLANS
0 1 2 3

PANEL 'MOV - N' PANEL SCHEDULE

480 VOLT, 3 PHASE, 3 WIRE, 125 MLO, 42 KA RMS SYM,

NEMA 4X STAINLESS STEEL CIRCUIT BREAKER PANEL WITH GROUND BAR

DESCRIPTION	LOAD VA	WIRE DATA or TAG #	BKR. SIZE	CKT. NO.	PHASE AMPS A Ø	PHASE AMPS B Ø	PHASE AMPS C Ø	CKT. NO.	BKR. SIZE	WIRE DATA or TAG #	LOAD VA	DESCRIPTION
					A Ø	B Ø	C Ø					
MOV FV 114A	2,493	3#12 #12 GND	15 A 3 POLE	1	3.0			2	15 A 3 POLE	3#12 #12 GND	2,493	MOV FV 124A
				3	3.0	3.0		4				
				5		3.0	3.0	6				
MOV FV 112	2,493	3#12 #12 GND	15 A 3 POLE	7	3.0			8	15 A 3 POLE	3#12 #12 GND	2,493	MOV FV 122
				9	3.0	3.0		10				
				11		3.0	3.0	12				
MOV FV 113	2,493	3#12 #12 GND	15 A 3 POLE	13	3.0			14	15 A 3 POLE	3#12 #12 GND	2,493	MOV FV 123
				15	3.0	3.0		16				
				17		3.0	3.0	18				
MOV FV 114B	2,493	3#12 #12 GND	15 A 3 POLE	19	3.0			20	15 A 3 POLE	3#12 #12 GND	2,493	MOV FV 124B
				21	3.0	3.0		22				
				23		3.0	3.0	24				
SPARE				25				26				SPARE
				27				28				
				29				30				
SPARE				31				32				SPARE
				33				34				
				35				36				
SPARE				37				38				SPARE
				39				40				
				41				42				

24.0	24.0	24.0	TOTAL CONNECTED LOAD
24.8	24.8	24.8	TOTAL NEC LOAD

KEYED NOTES:

1. INSTALL TWO 4" x 4" NEMA 4X STAINLESS STEEL WIREWAYS THE FULL LENGTH OF THE SLUDGE HOLDING TANKS.
2. SPACE THE WIREWAYS 4" OFF THE WALL TO ALLOW CONDUIT ACCESS TO EITHER WIREWAY FROM EITHER ABOVE OR BELOW.
3. INSTALL TWO 3/4" CONDUITS TO EACH MOV, ONE FROM THE POWER WIREWAY AND ONE FROM THE CONTROL WIREWAY.
4. INSTALL A 2" CONDUIT BETWEEN PANEL MOV-N AND THE UPPER WIREWAY FOR MOV POWER CIRCUITS.
5. INSTALL 3 x 2" IN CONDUITS FROM THE LOWER WIREWAY TO THE INDICATED HAND HOLE FOR CONTROL CIRCUITS.
6. WHEREVER LIGHTING CIRCUIT CONDUITS CROSS WALKWAYS, INSTALL CONDUITS IN THE CONCRETE STRUCTURE TO AVOID TRIP HAZARDS.
7. LEVEL DETECTOR. PROVIDE CONDUIT TO CONTROL WIRING WIREWAY AND CABLING, PER CONDUIT/CABLE SCHEDULE 2 OF 3, TO CONTROL CABINET CP 200. SEE SHEET M-102, DETAIL 1 FOR PHYSICAL INSTALLATION DETAILS.

AS BUILT

No.	Date	Revisions	App.
1	11/03/11	REVISED COND. SIZE & #-AS BUILT	L.C.C.

STATE OF TEXAS
LARRY M. BARFIELD
39337
REGISTERED
PROFESSIONAL ENGINEER
2-15-12

klotz associates

Binkley & Barfield
consulting engineers
1710 Seamist Drive
Houston, Texas 77008-3189
(713) 869-3433

SURVEYED BY: GEOSOLUTIONS | FIELD BOOK NO. : N/A

CITY OF HOUSTON
DEPARTMENT OF PUBLIC WORKS AND ENGINEERING

ALMEDA SIMS WWTP & SPF IMPROVEMENTS PACKAGE I

SLUDGE HOLDING TANK NORTH ELECTRICAL PLAN

FILE NO:	WW4903
WBS:	R-000298-0004-4
DRAWING SCALE	AS SHOWN
CITY OF HOUSTON PM	IRAJ RANJBAR, P.E.
DWG NO. :	E-502
SHEET NO.	100 OF 109

PUBLIC WORKS AND ENGINEERING
ACCEPTED & FILED
CITY DRAWING NUMBER
HOUSTON, TEXAS

PANEL 'MOV - S' PANEL SCHEDULE

480 VOLT, 3 PHASE, 3 WIRE, 125 MLO, 42 KA RMS SYM,

NEMA 4X STAINLESS STEEL CIRCUIT BREAKER PANEL WITH GROUND BAR

DESCRIPTION	LOAD VA	WIRE DATA or TAG #	BKR. SIZE	CKT. NO.	PHASE AMPS A Ø	PHASE AMPS B Ø	PHASE AMPS C Ø	CKT. NO.	BKR. SIZE	WIRE DATA or TAG #	LOAD VA	DESCRIPTION
MOV FV 115A	2,493	3#12 #12 GND	15 A 3 POLE	1	3.0			2	15 A 3 POLE	3#12 #12 GND	2,493	MOV FV 125A
				3		3.0		4				
				5			3.0	6				
MOV FV 111	2,493	3#12 #12 GND	15 A 3 POLE	7	3.0			8	15 A 3 POLE	3#12 #12 GND	2,493	MOV FV 121
				9		3.0		10				
				11			3.0	12				
MOV FV 115B	2,493	3#12 #12 GND	15 A 3 POLE	13	3.0			14	15 A 3 POLE	3#12 #12 GND	2,493	MOV FV 125B
				15		3.0		16				
				17			3.0	18				
SPARE				19				20				SPARE
				21				22				
				23				24				
SPARE				25				26				SPARE
				27				28				
				29				30				
SPARE				31				32				SPARE
				33				34				
				35				36				
SPARE				37				38				SPARE
				39				40				
				41				42				

18.0	18.0	18.0

TOTAL CONNECTED LOAD

18.8	18.8	18.8

TOTAL NEC LOAD

KEYED NOTES:

1. INSTALL TWO 4" x 4" NEMA 4X STAINLESS STEEL WIREWAYS THE FULL LENGTH OF THE SLUDGE HOLDING TANKS.
2. SPACE THE WIREWAYS 4" OFF THE WALL TO ALLOW CONDUIT ACCESS TO EITHER WIREWAY FROM EITHER ABOVE OR BELOW.
3. INSTALL TWO 3/4" CONDUITS TO EACH MOV, ONE FROM THE POWER WIREWAY AND ONE FROM THE CONTROL WIREWAY.
4. INSTALL A 2" CONDUIT BETWEEN PANEL MOV-S AND THE UPPER WIREWAY FOR MOV POWER CIRCUITS.
5. INSTALL 3 x 2" IN CONDUITS FROM THE LOWER WIREWAY TO THE INDICATED HAND HOLE FOR CONTROL CIRCUITS.
6. INSTALL TWO 3/4" CONDUITS FROM FLOW TRANSMITTER, ONE TO THE POWER WIREWAY AND ONE TO THE CONTROL WIREWAY. POWER CIRCUIT IS DERIVED FROM P-27 IN CP200 SHEET E-604, DETAIL 2. CONTROL CABLE IS ONE OF 7 PER TAG # 2C-C10.
7. WHEREVER LIGHTING CIRCUIT CONDUITS CROSS WALKWAYS, INSTALL CONDUITS IN THE CONCRETE STRUCTURE TO AVOID TRIP HAZARDS.

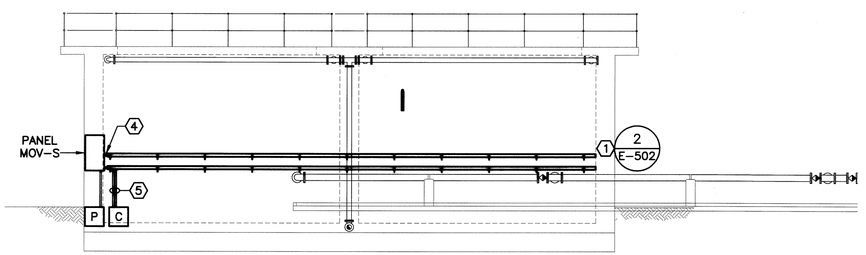

ELEVATION
SCALE: 1/8"=1'-0"
1 E-503

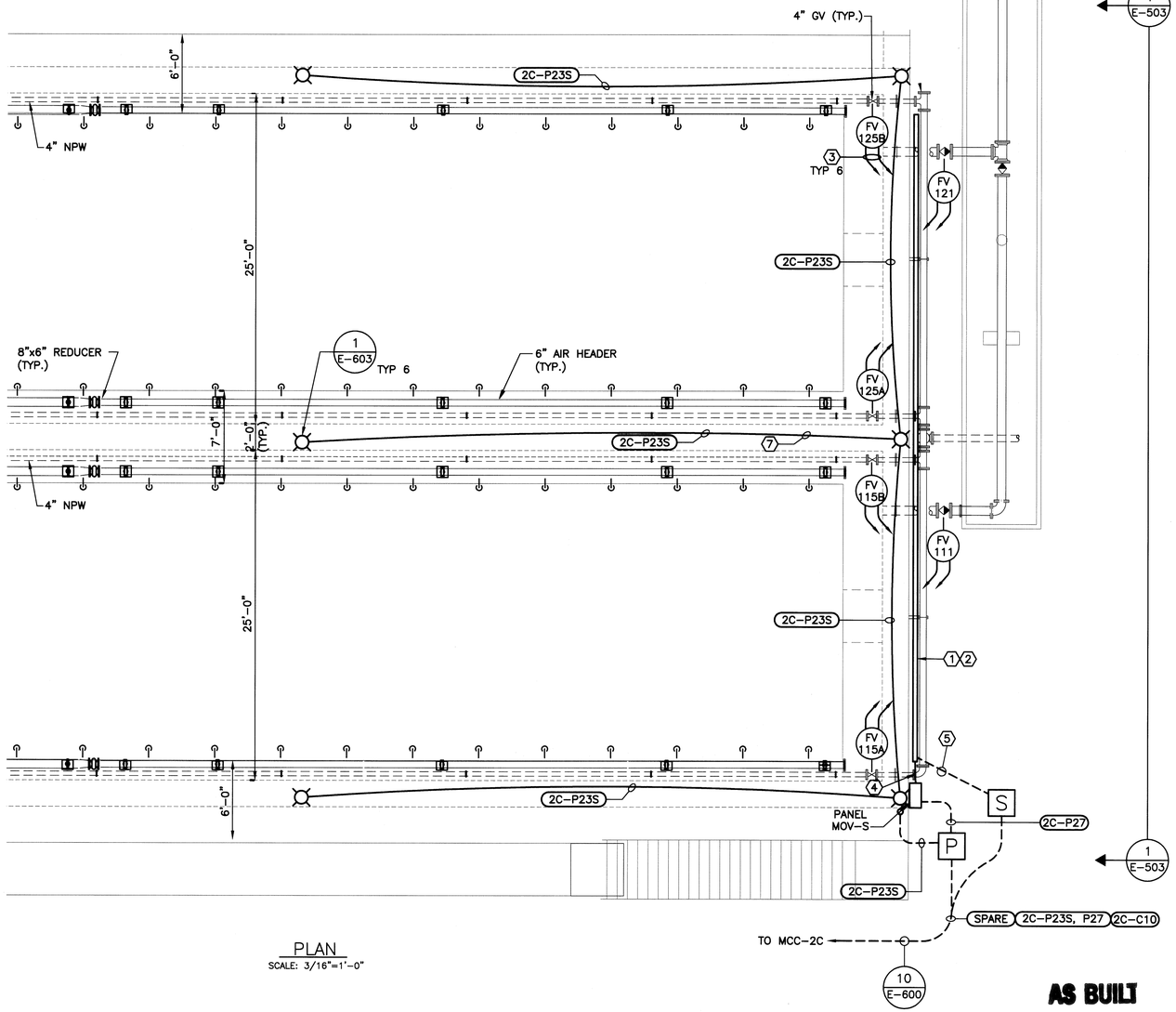

PLAN
SCALE: 3/16"=1'-0"

AS BUILT

No.	Date	Revisions	App.
1	11/03/11	REVISED COND. SIZE & #-AS BUILT	LCC

STATE OF TEXAS
LARRY M. BARFIELD
39337
REGISTERED PROFESSIONAL ENGINEER
2-15-12

klotz associates

Binkley & Barfield consulting engineers
1710 Seamist Drive
Houston, Texas 77008-3189
(713) 869-3433

SURVEYED BY: GEOSOLUTIONS | FIELD BOOK NO. : N/A

CITY OF HOUSTON
DEPARTMENT OF PUBLIC WORKS AND ENGINEERING

ALMEDA SIMS WWTP & SPF IMPROVEMENTS PACKAGE I

SLUDGE HOLDING TANK SOUTH ELECTRICAL PLAN

FILE NO:	WW4903
WBS:	R-000298-0004-4
DRAWING SCALE	AS SHOWN
CITY OF HOUSTON PM	IRAJ RANJBAR, P.E.
DWG NO. :	E-503
SHEET NO.	101 OF 109

PUBLIC WORKS AND ENGINEERING ACCEPTED & FILED
CITY DRAWING NUMBER
HOUSTON, TEXAS

G:\115800 Almeda Sims Package I\CADD\AS BUILT_E-502&3 Sludge Holding.dwg Nov 03,2011 - 1:18pm rpd

COLOR TABLE:

ORIGINAL SCALE IN INCHES FOR REDUCED PLANS
0 1 2 3

G:\115800 Almeda\CADD_E-504 MMC-2C Elevation.dwg Feb 07,2008 - 2:58pm swh

PROPOSED MCC-2C

(1 / E-504)

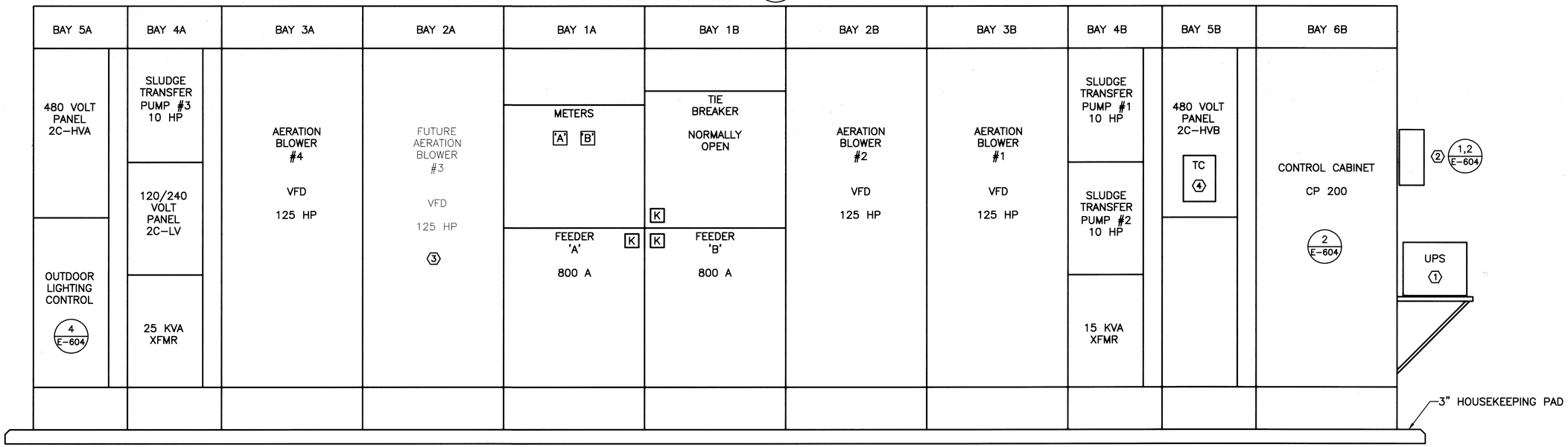

KEYED NOTES:

1. PROVIDE UPS, PER DIVISION 13 SPECIFICATIONS, FOR PLC/SCADA SYSTEM COMPONENTS. PROVIDE AND INSTALL A STEEL SHELF WITH ADEQUATE SUPPORT BRACING ATTACHED TO THE SIDE OF CONTROL CABINET CP-BL-M, APPROXIMATELY 2' 'AFF'. PAINT SHELF AND BRACKETS WITH AN EPOXY BASED PAINT THAT MATCHES THE COLOR OF THE MCC.
2. UPS BYPASS SWITCH.
3. PROVIDE VFD #3 AT THIS TIME
4. PROVIDE AND INSTALL 277 VOLT, PROGRAMMABLE TIME CLOCK WITH BATTERY BACKUP FOR CONTROL OF BLOWER ROOM LIGHTING. TIME CLOCK TO PROVIDE SWITCHED LEG DERIVED FROM CIRCUIT 'HVB-8'

PANEL '2C-HVA' - PANEL SCHEDULE

480/277 VOLT, 3 PHASE, 4 WIRE, 225 MLO, 42 KA RMS SYM,

NEMA 1 CIRCUIT BREAKER PANEL WITH NEUTRAL AND GROUND BARS. INSTALLED IN MCC-2C

DESCRIPTION	LOAD VA	WIRE DATA or TAG #	BKR. SIZE	CKT. NO.	PHASE AMPS A Ø	PHASE AMPS B Ø	PHASE AMPS C Ø	CKT. NO.	BKR. SIZE	WIRE DATA or TAG #	LOAD VA	DESCRIPTION
BLOWER #4 ANCILLARY POWER CIRCUIT	19,984	3 #10 #10 GND	30 A 3 POLE	1	24.0 / 24.0			2	30 A 3 POLE	3 #10 #10 GND	19,984	BLOWER #3 ANCILLARY POWER CIRCUIT PROVIDE BREAKER NOW WIRING IN FUTURE
				3		24.0 / 24.0		4				
				5			24.0 / 24.0	6				
PANEL MOV - N NORTH MOV SUB PANEL	34,902	3 #4 #4 GND	80 A 3 POLE	7	22.5 / 42.0			8	70 A 2 POLE	2 #4 INTERNAL TO MCC	10,800	25 KVA DRY TRANSFORMER
				9		22.5 / 42.0		10				
				11			3.4 / 42.0	12				
LIGHTING CONTACTOR	3,375	3 #12, #12 NEUTRAL	20 A 1 POLE	13	3.4 / 12.2			14	20 A 3 POLE	3 #12 #12 GND	2,825	EXHAUST FAN #1
	2,280		20 A 1 POLE	15		3.4 / 8.2		16				
			20 A 1 POLE	17			8.4 / 0.0	18				5 TON ELECTRIC HOIST (5.5 HP - BASED ON CM LODESTAR)
				19	8.4 / 0.0			20	20 A 3 POLE	3 #12 #12 GND	6,980	
				21		8.4 / 0.0		22				
				23				24				
				25				26				
				27				28				
				29				30				

* COORDINATE CIRCUIT BREAKER SIZE WITH MANUFACTURER'S NAMEPLATE DATA

136.5	136.1	101.8
140.4	149.1	102.7

TOTAL CONNECTED LOAD

TOTAL NEC LOAD

PANEL '2C-LV' - PANEL SCHEDULE

120/240 VOLT, 1 PHASE, 3 WIRE, 125 AMP MAIN CIRCUIT BREAKER, 25 KA RMS SYM,

NEMA 1 CIRCUIT BREAKER PANEL WITH NEUTRAL AND GROUND BARS. INSTALLED IN MCC-2C

DESCRIPTION	LOAD VA	WIRE DATA or TAG #	BKR. SIZE	CKT. NO.	PHASE AMPS A Ø	PHASE AMPS B Ø	CKT. NO.	BKR. SIZE	WIRE DATA or TAG #	LOAD VA	DESCRIPTION
CP 200 CONTROL & UPS POWER	1,800	2 #12 #12 GND	20 A 1 POLE	1	9.0 / 15.0		2	20 A 1 POLE	2 #12 #12 GND	1,080	GENERAL PURPOSE RECEPTACLES
AIR HANDLER	1,200	2 #12 #12 GND	20 A 1 POLE	3		9.0 / 10.0	4	20 A 1 POLE	2 #12 #12 GND	1,080	GENERAL PURPOSE RECEPTACLES
CONDENSER UNIT	2,300	2 #12 #12 GND	* 20 A 2 POLE HACR	5	9.0 / 9.6		6	20 A 1 POLE	2 #12 #12 GND	1,080	GENERAL PURPOSE RECEPTACLES
				7		13.5 / 9.6	8	20 A 1 POLE	2 #8 #8 GND	1,620	LIGHT STANCHION RECEPTACLES 1 OF 2
				9	10.5 / 0.0		10	20 A 1 POLE	2 #8 #8 GND	1,260	LIGHT STANCHION RECEPTACLES 2 OF 2
				11			12				
				13			14				
				15			16				
				17			18				
				19			20				
				21			22				
				23			24				
				25			26				
				27			28				
				29			30				

* COORDINATE BREAKER SIZE WITH MANUFACTURER'S SPECIFICATIONS

53.1	41.2
55.5	44.5

TOTAL CONNECTED LOAD

TOTAL NEC LOAD

PANEL '2C-HVB' - PANEL SCHEDULE

480/277 VOLT, 3 PHASE, 4 WIRE, 225 MLO, 42 KA RMS SYM,

NEMA 1 CIRCUIT BREAKER PANEL WITH NEUTRAL AND GROUND BARS. INSTALLED IN MCC-2C

DESCRIPTION	LOAD VA	WIRE DATA or TAG #	BKR. SIZE	CKT. NO.	PHASE AMPS A Ø	PHASE AMPS B Ø	PHASE AMPS C Ø	CKT. NO.	BKR. SIZE	WIRE DATA or TAG #	LOAD VA	DESCRIPTION
BLOWER #2 ANCILLARY POWER CIRCUIT	19,984	3 #10 #10 GND	30 A 3 POLE	1	24.0 / 24.0			2	30 A 3 POLE	3 #10 #10 GND	19,984	BLOWER #1 ANCILLARY POWER CIRCUIT
				3		24.0 / 24.0		4				
				5			24.0 / 24.0	6				
PANEL MOV - S SOUTH MOV SUB PANEL	34,902	3 #4 #4 GND	80 A 3 POLE	7	6.6 / 42.0			8	15 A 1 POLE	2 #12 #12 GND	1,830	BLOWER BUILDING INTERIOR LIGHTING
				9		1.1 / 42.0		10				
				11			1.1 / 42.0	12	15 A 3 POLE	3 #12 #12 GND	914	ROLL UP DOOR (1/2 HP)
EXHAUST FAN #2	2,825	3 #12 #12 GND	20 A 3 POLE	13	1.1 / 3.4			14				
				15		0.0 / 3.4		16				
				17			0.0 / 3.4	18				
				19				20				
				21				22				
				23				24				
				25				26				
				27				28				
				29				30				

109.5	102.9	102.9
113.0	106.4	106.4

TOTAL CONNECTED LOAD

TOTAL NEC LOAD

AS BUILT

COLOR TABLE:

ORIGINAL SCALE IN INCHES FOR REDUCED PLANS

0 1 2 3

No.	Date	Revisions	App.

STATE OF TEXAS
LARRY M. BARFIELD
39337
REGISTERED PROFESSIONAL ENGINEER
2-8-08

klotz associates

Binkley & Barfield consulting engineers
1710 Seamist Drive
Houston, Texas 77008-3189
(713) 869-3433

SURVEYED BY: GEOSOLUTIONS | FIELD BOOK NO. : N/A

CITY OF HOUSTON
DEPARTMENT OF PUBLIC WORKS AND ENGINEERING

ALMEDA SIMS WWTP & SPF IMPROVEMENTS PACKAGE I

ELECTRICAL - PROPOSED MCC-2C ELEVATION AND PANEL SCHEDULES

FILE NO:	WW4903
WBS:	R-000298-0004-4
DRAWING SCALE	NO SCALE
CITY OF HOUSTON PM	IRAJ RANJBAR, P.E.
DWG NO. :	E-504
SHEET NO.	102 OF 109

PUBLIC WORKS AND ENGINEERING ACCEPTED & FILED 4488 CITY DRAWING NUMBER HOUSTON, TEXAS

G:\115800 Almeda\CADD_E-505 MCC-2C 'A' One Line Diagram.dwg Feb 07,2008 - 2:58pm swh

BUS 'B' 1200 AMP 480/277 VOLT, 3 PHASE, 4 WIRE, 65 KAIC, NEMA 1 ENCLOSURE

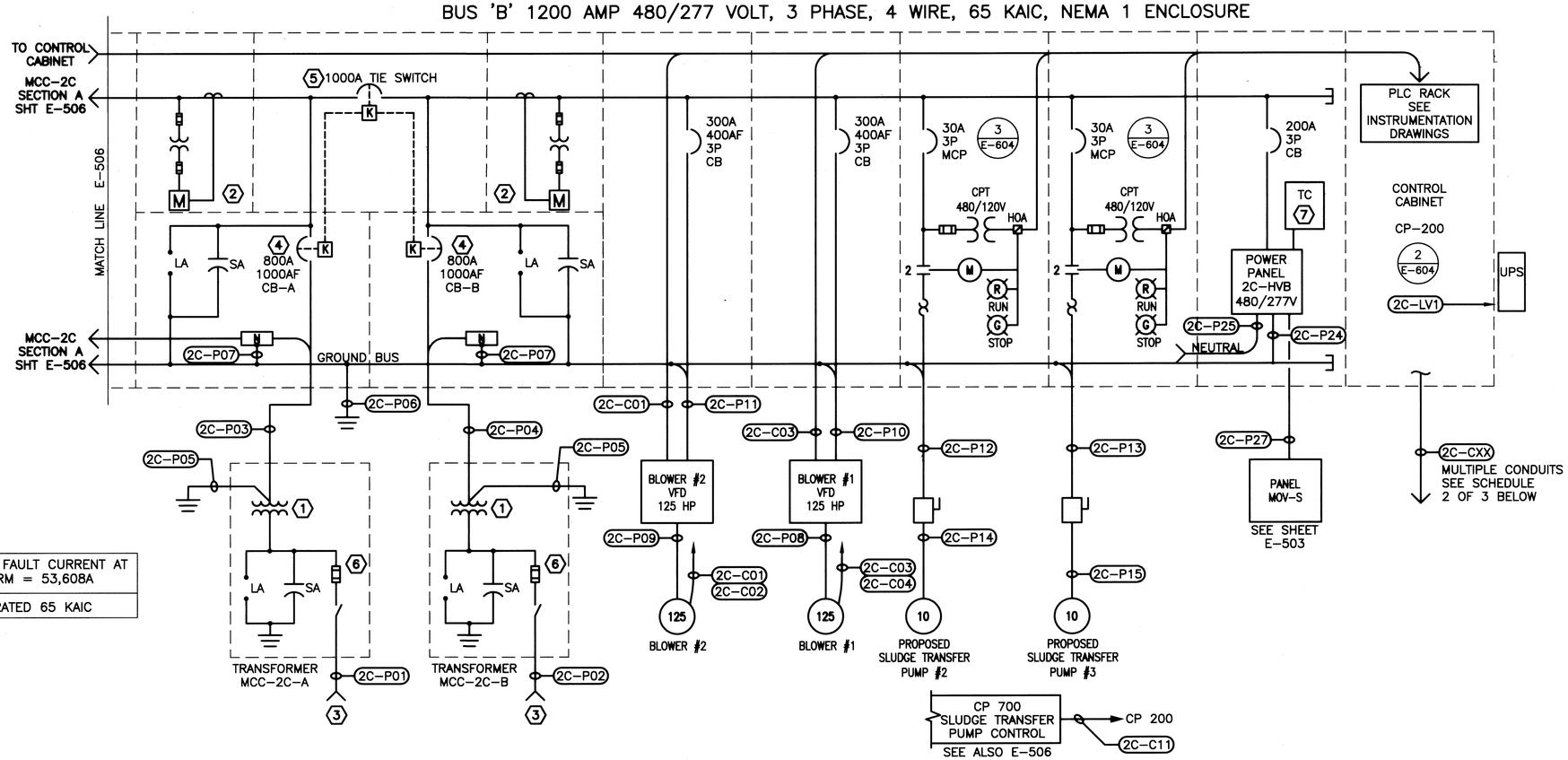

AVAILABLE FAULT CURRENT AT EACH XFORM = 53,608A
MCC-2C RATED 65 KAIC

PROPOSED MCC-2C INCOMING POWER AND SECTION B

LOCATION - SLUDGE HOLDING TANK ELECTRICAL EQUIPMENT ROOM

MCC - 2C CONDUIT and CABLE SCHEDULE 1 OF 3

CONDUIT TAG No.	CABLE TYPE & QUANTITY	CONDUIT SIZE	VOLTAGE	FROM	TO	COMMENTS/REMARKS
2C-P01	3 x #1 15 KV CABLE	2 x 4" (1 IS SPARE)	12.47 KV	SLUDGE PROCESSING BUILDING MAIN SWITCHGEAR	TRANSFORMER MCC-2C-A	SEE DRAWING E-401
2C-P02	3 x #1 15 KV CABLE	2 x 4" (1 IS SPARE)	12.47 KV	SLUDGE PROCESSING BUILDING MAIN SWITCHGEAR	TRANSFORMER MCC-2C-B	SEE DRAWING E-401
2C-P03	2 PARALLEL SETS 3 x 500 Kcmil, 1/0 NEUTRAL	2 x 4"	480	TRANSFORMER MCC-2C-A	MCC-2C SECTION 'A'	
2C-P04	2 PARALLEL SETS 3 x 500 Kcmil, 1/0 NEUTRAL	2 x 4"	480	TRANSFORMER MCC-2C-B	MCC-2C SECTION 'B'	
2C-P05	2/0 BARE	PER DRAWINGS	Ground Potential	PADMOUNT TRANSFORMERS	GROUNDING ELECTRODE SYSTEM	
2C-P06	2/0 BARE	INTERNAL TO MCC	Ground Potential	MCC-2C GROUND BUS	GROUNDING ELECTRODE SYSTEM	SEE DRAWING E-602, DETAIL 2
2C-P07	2/0 BARE	INTERNAL TO MCC	Ground Potential	NEUTRAL BARS	GROUND BUS	MAIN BONDING JUMPERS
2C-P08	3 x 3/0, #4 GND	2"	480 VOLTS VARIABLE FREQUENCY	VFD #1 MCC-2C SECTION B	BLOWER #1	
2C-P09	3 x 3/0, #4 GND	2"	480 VOLTS VARIABLE FREQUENCY	VFD #2 MCC-2C SECTION B	BLOWER #2	
2C-P10	3 x 3/0	INTERNAL TO MCC	480	MCC-2C SECTION 'B' CIRCUIT BREAKER	VFD #1 MCC-2C SECTION B	
2C-P11	3 x 3/0	INTERNAL TO MCC	480	MCC-2C SECTION 'B' CIRCUIT BREAKER	VFD #2 MCC-2C SECTION B	
2C-P12	3 x #10, #10 GND	1-1/2"	480	SLUDGE TRANSFER PUMP #2 STARTER	SLUDGE TRANSFER PUMP #2 DISCONNECT SWITCH	
2C-P13	3 x #10, #10 GND	1-1/2"	480	SLUDGE TRANSFER PUMP #3 STARTER	SLUDGE TRANSFER PUMP #3 DISCONNECT SWITCH	
2C-P14	3 x #10, #10 GND	3/4"	480	SLUDGE TRANSFER PUMP #2 DISCONNECT SWITCH	SLUDGE TRANSFER PUMP #2	
2C-P15	3 x #10, #10 GND	3/4"	480	SLUDGE TRANSFER PUMP #3 DISCONNECT SWITCH	SLUDGE TRANSFER PUMP #3	
2C-P27	3 x #4, #4 GND 2 x #12, #12 GND	4"	480	PANEL 2C HVB	PANEL MOV-S	PANEL MOV-S FEEDER CIRCUIT & 120 CIRCUIT FROM 2C-LV 1 VIA CP 200. SEE DWG E-604, DETAIL 2.

MCC - 2C CONDUIT and CABLE SCHEDULE 2 OF 3

CONDUIT TAG No.	CABLE SIZE & QUANTITY	CONDUIT SIZE	VOLTAGE	FROM	TO	COMMENTS/REMARKS
2C-C01	PROFIBUS	2"	DIGITAL DATA	BLOWER #2 LOCAL PLC	VFD #2	VIA MASTER PLC CP 200 CONTROL CABINET
2C-C02	ETHERNET		DIGITAL DATA	BLOWER #2 LOCAL PLC	MASTER PLC CP 200	
2C-C03	PROFIBUS	2"	DIGITAL DATA	BLOWER #1 LOCAL PLC	VFD #1	VIA MASTER PLC CP 200 CONTROL CABINET
2C-C04	ETHERNET		DIGITAL DATA	BLOWER #1 LOCAL PLC	MASTER PLC CP 200	
2C-C09	8 x 6 PAIR #16 CONTROL CABLES	4"	CONTROL SIGNALS	CONTROL CABINET CP 200	NORTH SIDE MOTOR OPERATED VALVES	INSTALL LEVEL DETECTOR CABLES 2C-C15 & 2C-C16 WITH MOV CONTROL CABLES
2C-C10	7 x 6 PAIR #16 CONTROL CABLES	4"	CONTROL SIGNALS	CONTROL CABINET CP 200	SOUTH SIDE MOV'S & FLOW XMITTER @ SE CORNER OF TANKS	
2C-10A	FACTORY CABLE BY MANUFACTURER	3/4"	SIGNAL	MAGNETIC FLOW METER	FLOW XMITTER @ SE CORNER OF TANKS	
2C-C11	PROFIBUS, 4 x #12, #12 GND	1-1/2"	DATA & 120 VOLTS	CONTROL CABINET CP 200	CP 300 AT SLUDGE TRANSFER PUMP SITE	SCADA AND 120 CIRCUITS FROM CP 200 UPS AND 2C-LV 1. SEE DWG E-604, DETAIL 2.
2C-C12	12 STRAND FIBER OPTIC CABLE PER SPECIFICATIONS	2 x 2" DUCTBANK	DATA	CONTROL CABINET CP 200	FIBER OPTIC PATCH PANEL TRUCK LOADING BLDG.	
2C-C13	2 PAIR #16	1"	SIGNAL	CONTROL CABINET CP 200	WEST AIR FLOW METER	FLOW METER (THERMAL DISPERSION TYPE)
2C-C13A	2 x #12, #12 GND	3/4"	120	CONTROL CABINET CP 200	WEST AIR FLOW METER	120 CIRCUIT FROM CP 200 UPS AND 2C-LV 1. SEE DWG E-604, DETAIL 2.
2C-C14	2 PAIR #16	1"	SIGNAL	CONTROL CABINET CP 200	EAST AIR FLOW METER	FLOW METER (THERMAL DISPERSION TYPE)
2C-C14A	2 x #12, #12 GND	3/4"	120	CONTROL CABINET CP 200	EAST AIR FLOW METER	120 CIRCUIT FROM CP 200 UPS AND 2C-LV 1. SEE DWG E-604, DETAIL 2.
2C-C15	2 PAIR #16	1"	SIGNAL	CONTROL CABINET CP 200	WEST LEVEL DETECTOR	INSTALL LEVEL DETECTOR CABLES WITH MOV CONTROL CABLES 2C-C09
2C-C16	2 PAIR #16	1"	SIGNAL	CONTROL CABINET CP 200	EAST LEVEL DETECTOR	INSTALL LEVEL DETECTOR CABLES WITH MOV CONTROL CABLES 2C-C09

NOTES TO CONDUIT/CABLE SCHEDULES: 2C-PXX DENOTES POWER, 2C-CXX DENOTES CONTROL

KEYED NOTES:

1. 500 KVA, 12,470 VOLT TO 480/277 VOLT PADMOUNT TRANSFORMER WITH INTERNAL FUSES, SURGE AND LIGHTNING PROTECTION.
2. DIGITAL PANEL METERS.
3. FROM 12,470 VOLT ELECTRICAL SWITCHGEAR IN SLUDGE PROCESSING BUILDING. SEE DRAWINGS E-400 & E-401
4. 1000 AMP FRAME CIRCUIT BREAKER WITH 800 AMP RATING PLUG. 100% RATED
5. 1000 AMP MOLDED CASE SWITCH. NO OCP REQUIRED.
6. CLASS E, 50 AMP, CURRENT LIMITING FUSE PER TRANSFORMER MANUFACTURER.
7. PROVIDE AND INSTALL 277 VOLT, PROGRAMMABLE TIME CLOCK WITH BATTERY BACKUP FOR CONTROL OF BLOWER ROOM LIGHTING. TIME CLOCK TO PROVIDE SWITCHED LEG DERIVED FROM CIRCUIT 'HVB-8'

AS BUILT

No.	Date	Revisions	App.

STATE OF TEXAS
LARRY M. BARFIELD
39337
REGISTERED PROFESSIONAL ENGINEER
2-8-08

klotz associates

Binkley & Barfield consulting engineers
1710 Seamist Drive
Houston, Texas 77008-3189
(713) 869-3433

SURVEYED BY: GEOSOLUTIONS | FIELD BOOK NO. : N/A

CITY OF HOUSTON
DEPARTMENT OF PUBLIC WORKS AND ENGINEERING

ALMEDA SIMS WWTP & SPF IMPROVEMENTS PACKAGE I

ELECTRICAL - MCC-2C ONE LINE DIAGRAM & DETAILS, SHEET 1 OF 2

FILE NO:	WW4903
WBS:	R-000298-0004-4
DRAWING SCALE	NTS
CITY OF HOUSTON PM	IRAJ RANJBAR, P.E.
DWG NO. :	E-505
SHEET NO.	103 OF 109

PUBLIC WORKS AND ENGINEERING ACCEPTED & FILED 44488 CITY DRAWING NUMBER HOUSTON, TEXAS

COLOR TABLE:

ORIGINAL SCALE IN INCHES FOR REDUCED PLANS
0 1 2 3

G:\115800 Almeda\CADD\E-506 MCC-2C 'B' One Line Diagram.dwg Feb 07,2008 - 2:59pm swh

COLOR TABLE:

ORIGINAL SCALE IN INCHES
FOR REDUCED PLANS
0 1 2 3

BUS 'A' 1200 AMP 480/277 VOLT, 3 PHASE, 4 WIRE, 65 KAIC, NEMA 1 ENCLOSURE

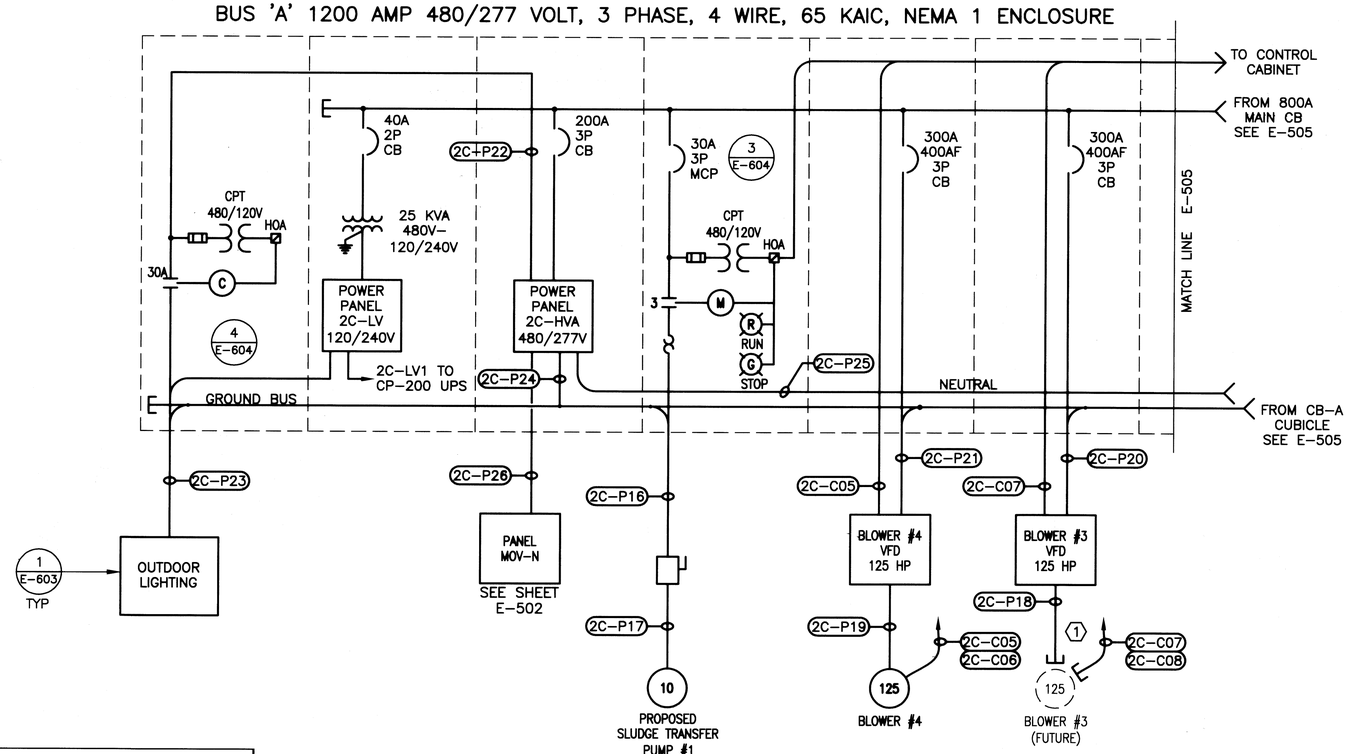

CP 700 SLUDGE TRANSFER PUMP CONTROL → CP 200 (2C-C11)

SEE ALSO E-505

PROPOSED MCC-2C SECTION A

LOCATION – SLUDGE HOLDING TANK ELECTRICAL EQUIPMENT ROOM

KEYED NOTES:

(1) PROVIDE & CAP CONDUITS FOR THE CONNECTION OF FUTURE BLOWER #3

MCC – 2C CONDUIT and CABLE SCHEDULE 3 OF 3

CONDUIT TAG No.	CABLE SIZE & QUANTITY	CONDUIT SIZE	VOLTAGE	FROM	TO	COMMENTS/REMARKS
2C-P16	3 x #10, #10 GND	1-1/2"	480	SLUDGE TRANSFER PUMP #1 STARTER	SLUDGE TRANSFER PUMP #1 DISCONNECT SWITCH	
2C-P17	3 x #10, #10 GND	3/4"	480	SLUDGE TRANSFER PUMP #1 DISCONNECT SWITCH	SLUDGE TRANSFER PUMP #1	
2C-P18	3 x 3/0, #4 GND	2"	480 VOLTS VARIABLE FREQUENCY	VFD #3 MCC-2C SECTION A	BLOWER #3 (FUTURE)	CONDUIT ONLY AT THIS TIME
2C-P19	3 x 3/0, #4 GND	2"	480 VOLTS VARIABLE FREQUENCY	VFD #4 MCC-2C SECTION A	BLOWER #4	
2C-P20	3 x 3/0	INTERNAL TO MCC	480	MCC-2C SECTION 'A' CIRCUIT BREAKER	VFD #3 MCC-2C SECTION B	
2C-P21	3 x 3/0	INTERNAL TO MCC	480	MCC-2C SECTION 'A' CIRCUIT BREAKER	VFD #4 MCC-2C SECTION B	
2C-P22	3 x #12 #12 NEUTRAL	INTERNAL TO MCC	480/277	PANEL 2C HVA	LIGHTING CONTACTOR	
2C-P23N	2 x #12, #12 GND (LTG) 2 x #8, #8 GND (RECPT)	1-1/2"	277 & 120	LIGHTING CONTACTOR AND PANEL 2C-LV	OUTSIDE LIGHTING STANCHIONS	277 VOLTS FROM 2C-HVA 13 VIA LTG CONTACTOR. 120 VOLTS FROM 2C-LV 8
2C-P23S	2 x #12, #12 GND (LTG) 2 x #8, #8 GND (RECPT)	1-1/2"	277 & 120	LIGHTING CONTACTOR AND PANEL 2C-LV	OUTSIDE LIGHTING STANCHIONS	277 VOLTS FROM 2C-HVA 13 VIA LTG CONTACTOR. 120 VOLTS FROM 2C-LV 10
2C-P24	#4	INTERNAL TO MCC	GND POTENTIAL	PANEL 2C HVA	MCC 2C GROUND BUS	
2C-P25	#4	INTERNAL TO MCC	GND POTENTIAL	PANEL 2C HVA	MCC 2C NEUTRAL BAR	
2C-P26	3 x #4, #4 GND	4"	480	PANEL 2C HVA	PANEL MOV-N	NORTH SIDE MOV POWER
2C-C05	PROFIBUS	2"	DIGITAL DATA	BLOWER #4 LOCAL PLC	VFD #4	VIA MASTER PLC CP 200 CONTROL CABINET
2C-C06	ETHERNET		DIGITAL DATA	BLOWER #4 LOCAL PLC	MASTER PLC CP 200	
2C-C07	PROFIBUS CONDUIT ONLY AT THIS TIME	2"	DIGITAL DATA	BLOWER #3 LOCAL PLC	VFD #3	VIA MASTER PLC CP 200 CONTROL CABINET
2C-C08	ETHERNET CONDUIT ONLY AT THIS TIME		DIGITAL DATA	BLOWER #3 LOCAL PLC	MASTER PLC CP 200	

NOTES:

3C-PXX DENOTES POWER
3C-CXX DENOTES CONTROL

ELECTRICAL LOAD ANALYSIS MCC-2C

LOAD DESCRIPTION	SECTION 'A' CONNECTED LOAD AMPS @ 480/277V	SECTION 'A' MULT.	SECTION 'A' NEC LOAD AMPS @ 480/277V	SECTION 'B' CONNECTED LOAD AMPS @ 480/277V	SECTION 'B' MULT.	SECTION 'B' NEC LOAD AMPS @ 480/277V	TOTAL LOAD CONNECTED LOAD AMPS @ 480/277V	TOTAL LOAD MULT.	TOTAL LOAD NEC LOAD AMPS @ 480/277V
125 HP AERATION BLOWERS (4)	312.0	1.00	312.0	312.0	1.00	312.0	* 468.0	1.00	468.0
ANCILLARY BLOWER LOADS (4)	15.0	1.00	15.0	30.0	1.00	30.0	* 45.0	1.00	45.0
10 HP SLUDGE TRANSFER PUMPS (3)	14.0	1.00	14.0	28.0	1.00	28.0	42.0	1.00	42.0
MOV'S	42.0	1.00	42.0	42.0	1.00	42.0	84.0	1.00	84.0
AIR CONDITIONER	5.0	1.00	5.0	0.0	1.00	0.0	5.0	1.00	5.0
EXHAUST FANS (2)	3.4	1.00	3.4	3.4	1.00	3.4	6.8	1.00	6.8
5 TON HOIST (5.5 HP)	8.4	1.00	8.4		1.00	0.0	8.4	1.00	8.4
		1.00	0.0	1.1	1.00	1.1	1.1	1.00	1.1
INTERIOR LIGHTING		1.25	0.0	6.6	1.25	8.3	6.6	1.00	6.6
EXTERIOR LIGHTING	20.4	1.25	25.5		1.25	0.0	20.4	1.00	20.4
LARGEST MOTOR @ 25%	156.0	0.25	39.0	156.0	0.25	39.0	156.0	0.25	39.0
	SECTION 'A' LOAD		464.3	SECTION 'B' LOAD		463.8	TOTAL LOAD		726.3

* BLOWERS ARE INTERLOCKED SO THAT ONLY 3 CAN RUN AT ANY TIME

TOTAL LOAD = 726.3 AMPS

AS BUILT

No.	Date	Revisions	App.

STATE OF TEXAS
LARRY M. BARFIELD
39337
REGISTERED PROFESSIONAL ENGINEER
2-8-08

klotz associates

Binkley & Barfield consulting engineers
1710 Seamist Drive
Houston, Texas 77008-3189
(713) 869-3433

SURVEYED BY: GEOSOLUTIONS | FIELD BOOK NO. : N/A

CITY OF HOUSTON
DEPARTMENT OF PUBLIC WORKS AND ENGINEERING

ALMEDA SIMS WWTP & SPF IMPROVEMENTS PACKAGE I

ELECTRICAL - MCC-2C ONE LINE DIAGRAM & DETAILS, SHEET 2 OF 2

FILE NO:	WW4903
WBS: R-000298-0004-4	
DRAWING SCALE	
NTS	
CITY OF HOUSTON PM	
IRAJ RANJBAR, P.E.	
DWG NO. :	E-506
SHEET NO. 104 OF 109	

PUBLIC WORKS AND ENGINEERING ACCEPTED & FILED
44488
CITY DRAWING NUMBER
HOUSTON, TEXAS

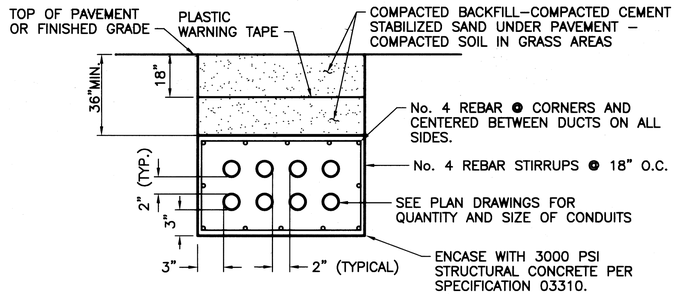

TYPICAL DUCT BANK INSTALLATION DETAIL — A / E-600
SCALE: NTS

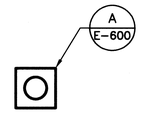

ALL CONDUITS ARE 1 1/2"

SECTION 1 / E-600
SCALE: NTS

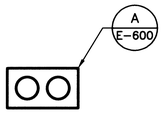

ALL CONDUITS ARE 1 1/2"

SECTION 2 / E-600
SCALE: NTS

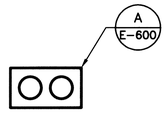

ALL CONDUITS ARE 2"

SECTION 2A / E-600
SCALE: NTS

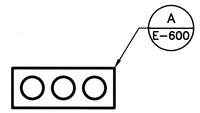

ALL CONDUITS ARE 1 1/2"

SECTION 3 / E-600
SCALE: NTS

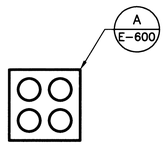

ALL CONDUITS ARE 1 1/2"

SECTION 4 / E-600
SCALE: NTS

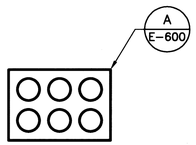

ALL CONDUITS ARE 1 1/2"

SECTION 5 / E-600
SCALE: NTS

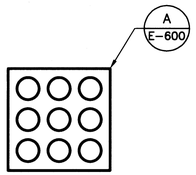

ALL CONDUITS ARE 1 1/2"

SECTION 6 / E-600
SCALE: NTS

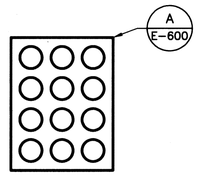

ALL CONDUITS ARE 1 1/2"

SECTION 7 / E-600
SCALE: NTS

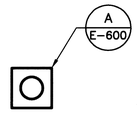

ALL CONDUITS ARE 4"

SECTION 8 / E-600
SCALE: NTS

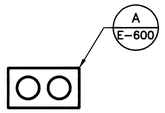

ALL CONDUITS ARE 4"

SECTION 9 / E-600
SCALE: NTS

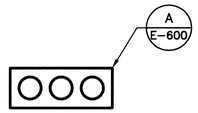

ALL CONDUITS ARE 4"

SECTION 10 / E-600
SCALE: NTS

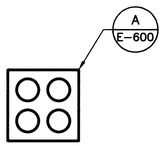

ALL CONDUITS ARE 4"

SECTION 11 / E-600
SCALE: NTS

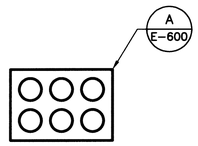

ALL CONDUITS ARE 4"

SECTION 12 / E-600
SCALE: NTS

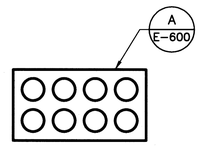

ALL CONDUITS ARE 4"

SECTION 13 / E-600
SCALE: NTS

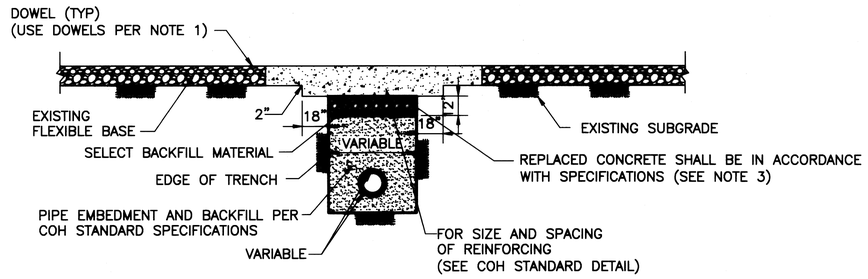

REPAIR OF REINFORCED CONCRETE PAVEMENT — 16 / E-600
SCALE: NTS

NOTES:

1. EXPOSE 15" OF REINFORCING STEEL AT PROPOSED SAW JOINT. IF NO REINFORCING STEEL EXISTS, USE HORIZONTAL DOWELS. HORIZONTAL DOWELS SHALL BE #6 BARS, 24" LONG, 24" C–C, DRILLED AND EMBEDDED 8" INTO THE CENTER OF THE EXISTING SLAB. WITH "PO ROC" OR EQUAL.
2. IF REINFORCED CONCRETE IS OVERLAYED WITH ASPHALT, REPLACE WITH 2" MIN HMAC SURFACING.
3. INSTALL CABLING IN LOWER CONDUITS OF DUCTBANKS FIRST, LEAVING THE UPPER CONDUITS AS SPARES FOR FUTURE USE.
4. KEEP INSTRUMENTATION CONDUITS GROUPED TO ONE SIDE OF THE DUCTBANK SO THAT THEY MAY BE ROUTED TO SEPARATE HAND HOLES AS NOTED IN THE CONSTRUCTION DRAWINGS.
5. INSTALL 1/4" NYLON PULL STRING IN SPARE CONDUITS FOR FUTURE USE. NOTE: PULL STRING IS NOT FOR INSTALING CABLE, BUT FOR INSTALLATION OF A HEMP PULL ROPE FOR CABLE PULLING.
6. CAP ALL UNUSED CONDUITS TO PREVENT CLOGGING WITH SILT. THE REQUIRED PULL STRINGS MAY BE THREADED THROUGH A HOLE IN THE CAP.

AS BUILT

No.	Date	Revisions	App.

STATE OF TEXAS — LARRY M. BARFIELD — 39337 — REGISTERED PROFESSIONAL ENGINEER — 2-5-08

klotz associates

Binkley & Barfield consulting engineers
1710 Seamist Drive
Houston, Texas 77008-3189
(713) 869-3433

SURVEYED BY: GEOSOLUTIONS | FIELD BOOK NO. : N/A

CITY OF HOUSTON
DEPARTMENT OF PUBLIC WORKS AND ENGINEERING

ALMEDA SIMS WWTP & SPF IMPROVEMENTS PACKAGE I

ELECTRICAL DETAILS - DUCT BANKS

FILE NO:	WW4903
WBS:	R-000298-0004-4
DRAWING SCALE	3/16" = 1'-0"
CITY OF HOUSTON PM	IRAJ RANJBAR, P.E.
DWG NO. :	E-600
SHEET NO.	105 OF 109

PUBLIC WORKS AND ENGINEERING — ACCEPTED & FILED — 44488 — CITY DRAWING NUMBER — HOUSTON, TEXAS

G:\115800 Almeda\CADD_E-600 Duct Bank Details.dwg Feb 07,2008 - 2:59pm swh

COLOR TABLE:

ORIGINAL SCALE IN INCHES FOR REDUCED PLANS
0 1 2 3

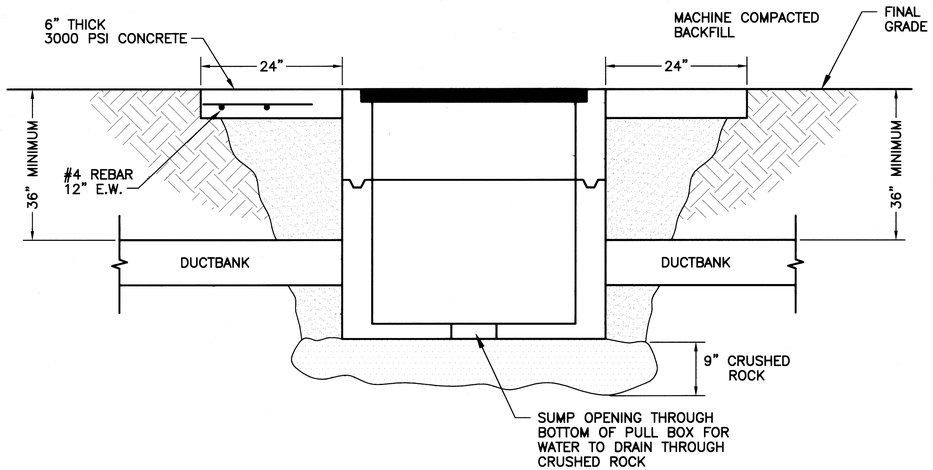

SECTION VIEW

TYPICAL SINGLE PULL BOX DETAIL (1 / E-601)

SCALE: NTS

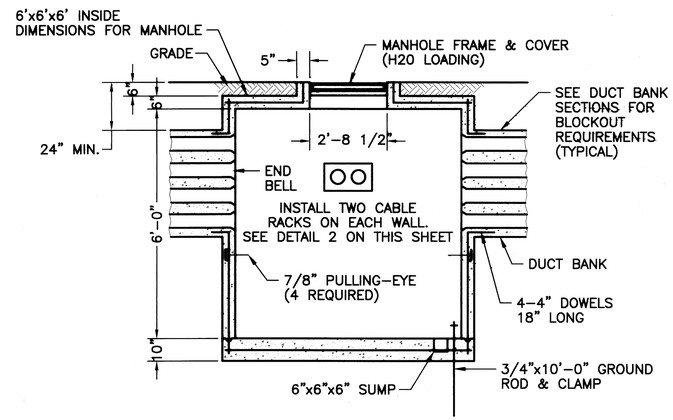

MANHOLE SECTION (2 / E-601)

SCALE: NTS

NOTE: PULL BOX SHALL BE DESIGNED FOR ASSHTO H-20 LOADING

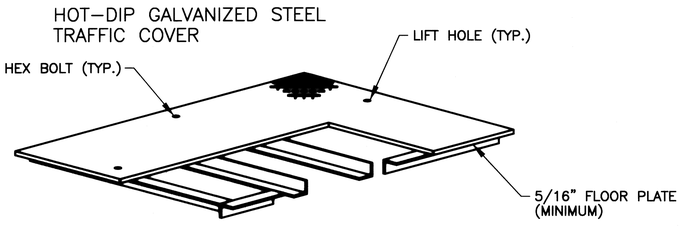

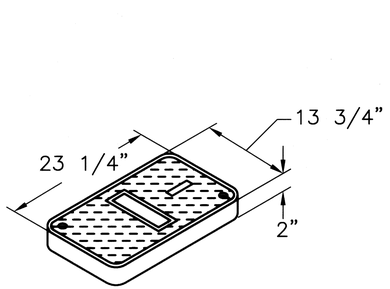

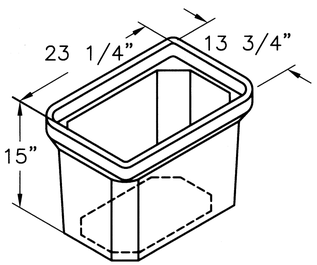

TYPE "A" HAND HOLE
25 1/4" x 16" OVERALL (4 / E-601)

SCALE: NTS
NEWBASIS PC1324DP OR EQUAL

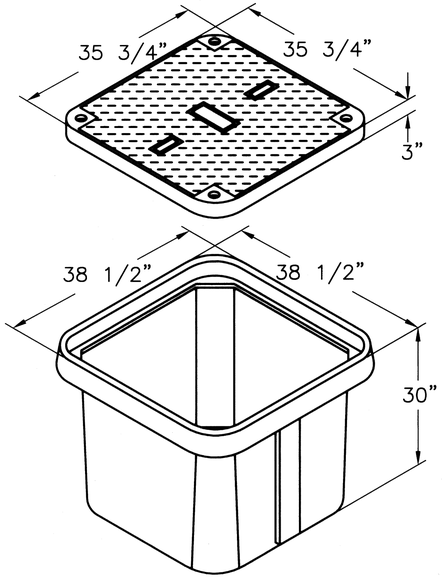

TYPE "B" HAND HOLE
38 1/2" x 38 1/2" OVERALL (5 / E-601)

SCALE: NTS
NEWBASIS FCA363630OFF4 OR EQUAL

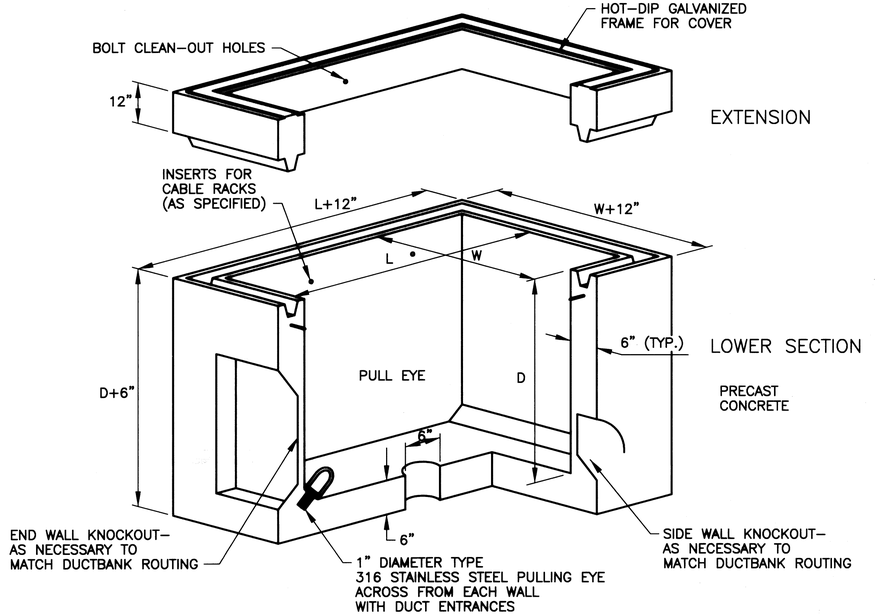

TYPICAL MANHOLE ASSEMBLY DETAIL (3 / E-601)

SCALE: NTS

AS BUILT

No.	Date	Revisions	App.

STATE OF TEXAS
LARRY M. BARFIELD
39337
REGISTERED
PROFESSIONAL ENGINEER

klotz associates

Binkley & Barfield
consulting engineers
1710 Seamist Drive
Houston, Texas 77008-3189
(713) 869-3433

SURVEYED BY: GEOSOLUTIONS | FIELD BOOK NO. : N/A

CITY OF HOUSTON
DEPARTMENT OF PUBLIC WORKS AND ENGINEERING

ALMEDA SIMS WWTP & SPF IMPROVEMENTS PACKAGE I

ELECTRICAL DETAILS - ELECTRICAL HAND HOLES

FILE NO:	WW4903
WBS: R-000298-0004-4	
DRAWING SCALE	3/16" = 1'-0"
CITY OF HOUSTON PM	IRAJ RANJBAR, P.E.
DWG NO. :	E-601
SHEET NO. 106 OF 109	

PUBLIC WORKS AND ENGINEERING
ACCEPTED & FILED
44488
CITY DRAWING NUMBER
HOUSTON, TEXAS

COLOR TABLE:

ORIGINAL SCALE IN INCHES FOR REDUCED PLANS
0 1 2 3

G:\115800 Almeda\CADD_E-601 Hand Hole Details.dwg Feb 07,2008 - 2:59pm swh

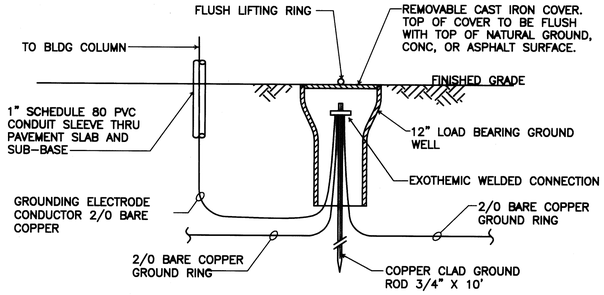

TYPICAL GROUND WELL INSTALLATION (A / E-602)
NO SCALE

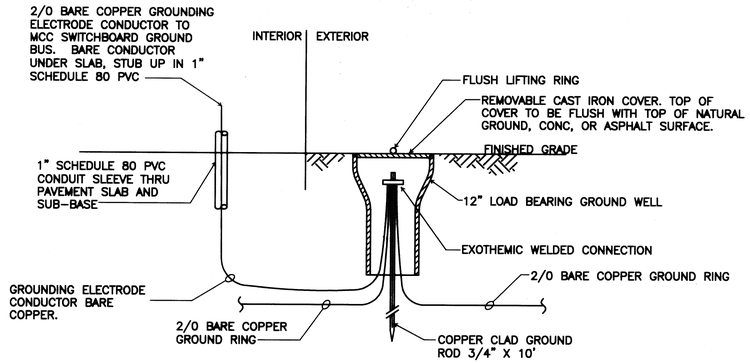

SERVICE GROUND WELL INSTALLATION (B / E-602)
NO SCALE

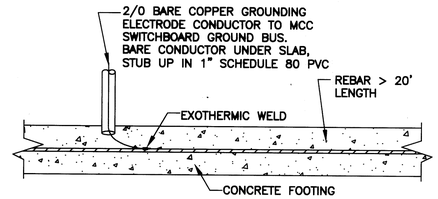

CONCRETE ENCASED GROUNDING ELECTRODE (C / E-602)
NO SCALE

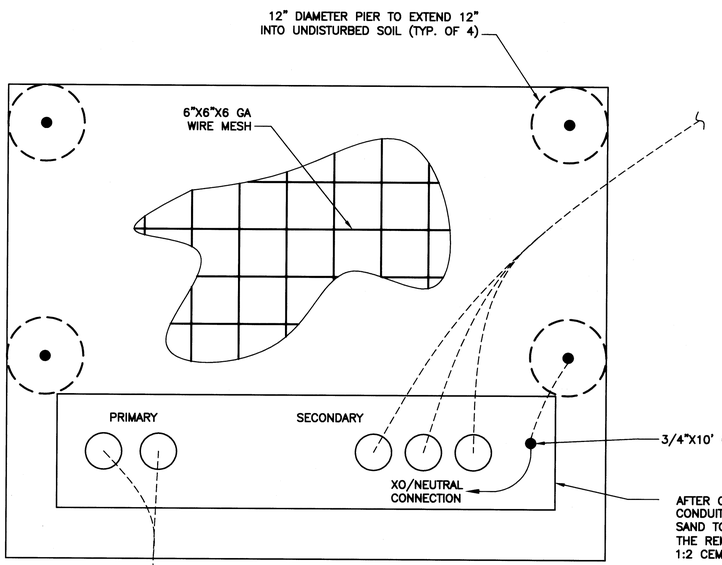

PLAN

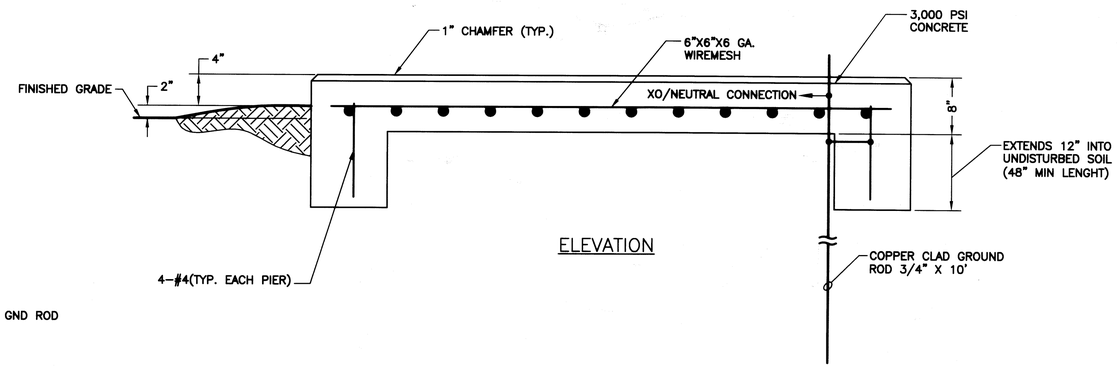

ELEVATION

TRANSFORMER PAD DETAIL (D / E-602)
SCALE: N.T.S.

GENERAL NOTES:

1. ADJUST OVERALL DIMENSIONS TO MATCH FOOTPRINT OF TRANSFORMER
2. CONDUIT QUANTITY AND SIZE PER APPLICABLE CONDUIT SCHEDULE(S)
3. BOND GROUND ROD TO TRANSFORMER XO/NEUTRAL CONNECTION, TRANSFORMER CASE AND PIER REBAR USING 1/0 BARE COPPER BONDING JUMPERS FOR MCC-3C AND 2/0 BARE COPPER BONDING JUMPERS FOR MCC-2C
4. ALL CONNECTIONS EXCEPT XO/NEUTRAL & TRANSFORMER CASE TO BE MADE USING EXOTHERMIC WELDS.
5. WHERE AVAILABLE, BOND TO OTHER ELEMENTS OF THE GROUNDING ELECTRODE SYSTEM.

AS BUILT

No.	Date	Revisions	App.

STATE OF TEXAS — LARRY M. BARFIELD — 39337 — REGISTERED PROFESSIONAL ENGINEER — 2-8-08

klotz associates

Binkley & Barfield consulting engineers
1710 Seamist Drive
Houston, Texas 77008-5189
(713) 869-3433

SURVEYED BY: GEOSOLUTIONS | FIELD BOOK NO. : N/A

CITY OF HOUSTON
DEPARTMENT OF PUBLIC WORKS AND ENGINEERING

ALMEDA SIMS WWTP & SPF IMPROVEMENTS PACKAGE I

ELECTRICAL DETAILS
GROUNDING ELEMENTS & TRANSFORMER PAD

FILE NO:	WW4903
WBS: R-000298-0004-4	
DRAWING SCALE	
NO SCALE	
CITY OF HOUSTON PM	
IRAJ RANJBAR, P.E.	
DWG NO. :	E-602
SHEET NO. 107 OF 109	

PUBLIC WORKS AND ENGINEERING — ACCEPTED & FILED — 44488 — CITY DRAWING NUMBER — HOUSTON, TEXAS

COLOR TABLE:

ORIGINAL SCALE IN INCHES FOR REDUCED PLANS
0 1 2 3

G:\115800 Almeda\CADD_E-602 Details.dwg Feb 07,2008 - 2:59pm swh

G:\115800 Almeda\CADD_E-603 Details.dwg Feb 07,2008 - 3:00pm swh

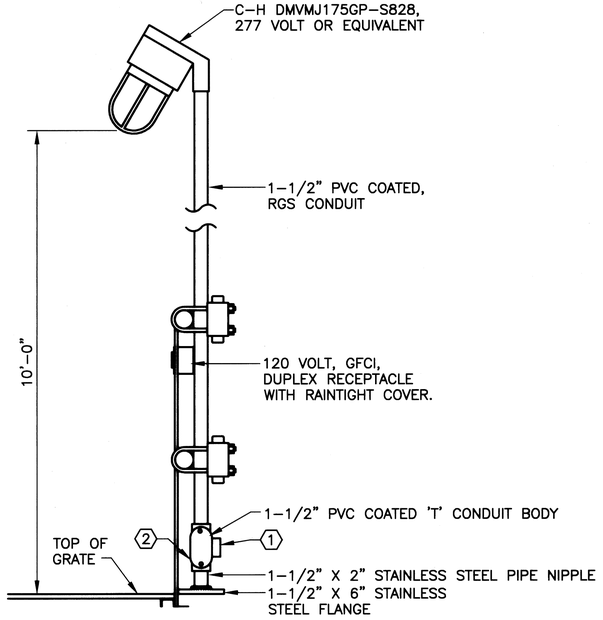

LIGHT STANCHION DETAIL 1 / E-603
SCALE: NTS

GENERAL NOTES:

1. STANCHIONS SHALL NOT BE SOLELY DEPENDENT ON RAILINGS FOR SUPPORT. SECURE BASE OF STANCHION TO STRUCTURE AS SHOW. ALTERNATE BRACING, UTILIZING CORROSION RESISTANT FITTINGS MAY BE SUBMITTED TO THE ENGINEER FOR APPROVAL.
2. INSTALL A WEATHERPROOF 120 VOLT GFCI RECEPTACLE ON EACH LIGHT STANCHION, CIRCUIT PER APPLICABLE PANEL AND CONDUIT SCHEDULE.

KEYED NOTES:

(1) ORIENT HUB AND REDUCE SIZE WITH APPROPRIATE PVC COATED FITTING(S) TO ACCOMMODATE LIGHTING CIRCUIT CONDUIT.

(2) PACK THE BOTTOM HUB OF THE CONDUIT BODY WITH DUCT SEAL TO PREVENT PENETRATION OF CORROSIVE GASES

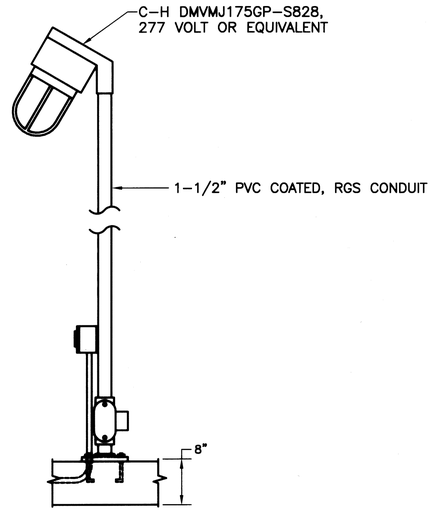

ALTERNATE MOUNTING
FOR SLAB INSTALLATION 1A / E-603
SCALE: NTS

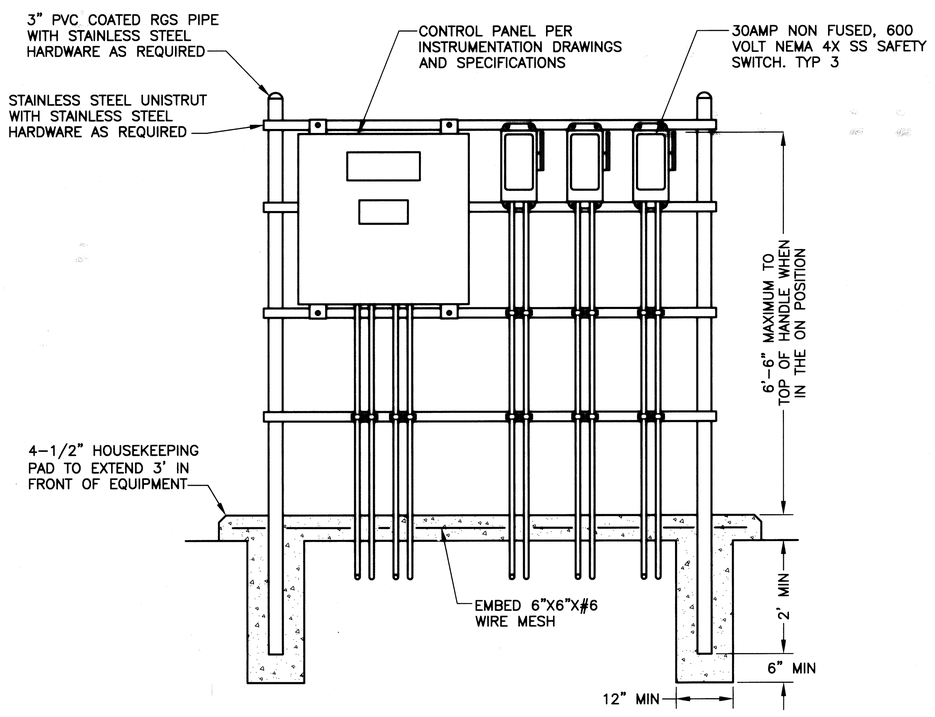

TYPICAL MOUNTING RACK 2 / E-603
SCALE: NTS

AS BUILT

COLOR TABLE:

ORIGINAL SCALE IN INCHES FOR REDUCED PLANS
0 1 2 3

No.	Date	Revisions	App.

STATE OF TEXAS
LARRY M. BARFIELD
39337
REGISTERED
PROFESSIONAL ENGINEER
2-8-08

klotz associates

Binkley & Barfield
consulting engineers
1710 Seamist Drive
Houston, Texas 77008-3189
(713) 869-3433

SURVEYED BY: GEOSOLUTIONS | FIELD BOOK NO. : N/A

CITY OF HOUSTON
DEPARTMENT OF PUBLIC WORKS AND ENGINEERING

ALMEDA SIMS WWTP & SPF
IMPROVEMENTS PACKAGE I

LIGHT STANCHION &
EQUIPMENT RACK

FILE NO:	WW4903
WBS:	R-000298-0004-4
DRAWING SCALE	3/16" = 1'-0"
CITY OF HOUSTON PM	
IRAJ RANJBAR, P.E.	
DWG NO. :	E-603
SHEET NO.	108 OF 109

PUBLIC WORKS AND ENGINEERING
ACCEPTED & FILED
44485
CITY DRAWING NUMBER
HOUSTON, TEXAS

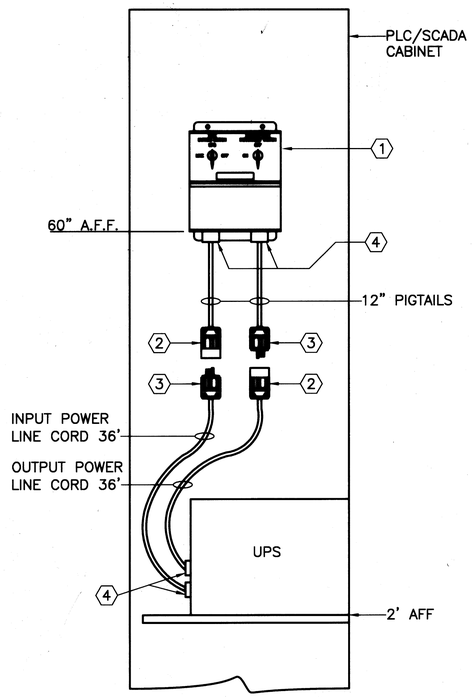

UPS CONNECTION (1 / E-604)
SCALE: NTS

NOTE:

1. PIGTAILS AND LINE CORDS SHALL BE 3 WIRE #12, TYPE SO CABLE OR APPROVED EQUAL

KEYED NOTES:

(1) MAKE-BEFORE-BREAK BYPASS SWITCH MODEL BPE-01 BY BEST POWER TECHNOLOGY OR APPROVED EQUAL

(2) NEMA TYPE L5-20 LOCKING CORD BODY 20 AMP, 125 V, 2-POLE, 3-WIRE GROUNDING

(3) NEMA TYPE L5-20 LOCKING MALE CAP 20 AMP, 125 V, 2-POLE, 3-WIRE GROUNDING

(4) STRAIN RELIEF CONNECTORS

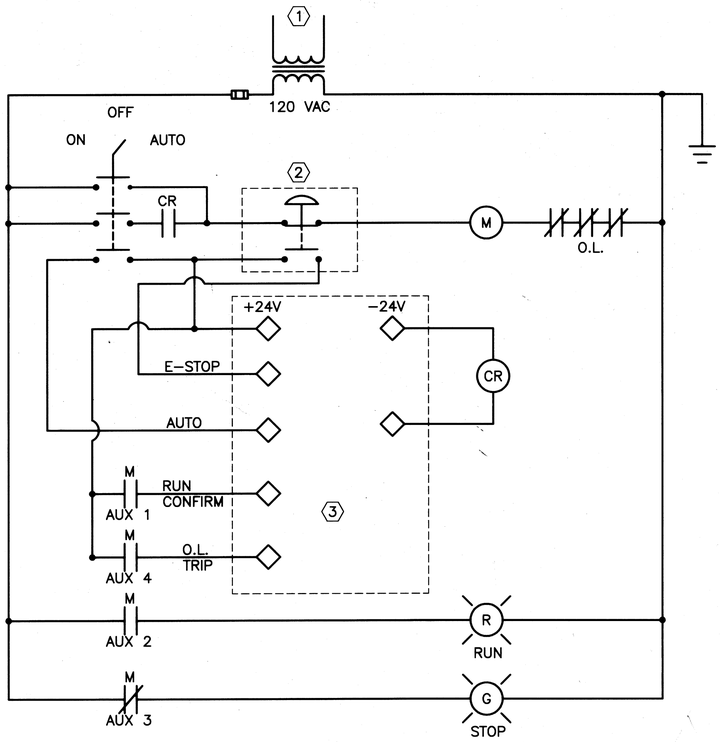

TYPICAL MCC FVNR MOTOR STARTER CONTROL WIRING (3 / E-604)

SWITCH STATUS TABLE

OPERATOR POSITION			
CONTACT A	ON	X	X
CONTACT B	X	X	ON
CONTACT C	X	X	ON

SWITCH LEGEND PLATE: OFF / ON / AUTO

KEYED NOTES:

(1) INTERNAL CONTROL TRANSFORMER

(2) REMOTE E-STOP PUSHBUTTON OR LANYARD TYPE MECHANISM AS REQUIRED - SEE DRAWINGS

(3) PLC OR REMOTE I/O BLOCK - SEE INSTRUMENTATION DRAWINGS FOR WIRE AND TERMINAL ASSIGNMENTS.

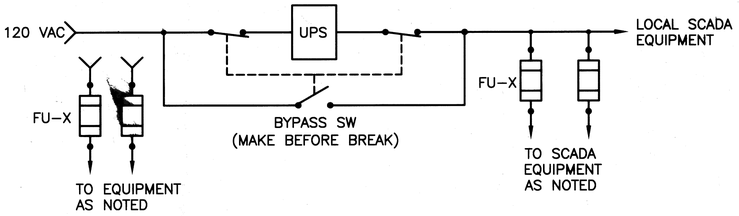

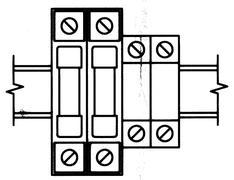

120 VOLT CONTROL POWER PROTECTION (2 / E-604)

1. PROVIDE AND INSTALL DIN RAIL MOUNTED FUSE HOLDERS AND NEUTRAL CONDUCTOR TERMINAL BLOCKS TO ACCOMMODATE UPS POWER TO SCADA EQUIPMENT AND 120 VOLT CONTROL POWER TO ANCILLARY DEVICES SUCH AS SOLENOIDS.
2. PROVIDE INDIVIDUAL, TYPE FNQ TIME DELAY FUSES, FOR UPS CIRCUITS GOING TO REMOTE SCADA EQUIPMENT LOCATIONS.
3. PROVIDE INDIVIDUAL, TYPE FNQ TIME DELAY FUSES, FOR EACH ANCILLARY DEVICE.

120 VOLT CONTROL POWER DISTRIBUTION TABLE

FUSE LOCATION	POWER SOURCE	TAG #	LOAD SERVED	FUSE NUMBER	FUSE RATING
CR BREAKER 2C-LV 1	2C-LV 1	INTERNAL	CP 200 UPS VIA BYPASS SWITCH		20A CB
CP 200 CABINET	2C-LV 1	2C-11	CP 300 FLOW XMITTER	FU-1	5A
CP 200 CABINET	2C-LV 1	2C-P27	SLUDGE TANK FLOW XMITTER	FU-2	5A
CP 200 CABINET	2C-LV 1	2C-C13A	WEST AIR FLOW METER	FU-3	5A
CP 200 CABINET	2C-LV 1	2C-C14A	EAST AIR FLOW METER	FU-4	5A
CP 200 CABINET	CP 200 UPS	2C-11	CP 300 REMOTE I/O	FU-5	5A
CP 200 CABINET	CP 200 UPS	INTERNAL	CP 200 PLC EQUIPMENT	FU-6	5A
CP 430 CABINET	120 VOLT PWR	WP-08	CP 600 FLOW XMITTER	FU-1	5A
CP 430 CABINET	CP 430 UPS	WP-07	CP 600 REMOTE I/O	FU-2	5A
CR BREAKER 3C-LV 9	3C-LV 9	INTERNAL	CP 3C UPS VIA BYPASS SWITCH	FU-1	20A CB
CP 3C CABINET	3C-LV 9	3C-P32	CP 710 REMOTE I/O	FU-2	10A
CP 3C CABINET	CP 3C UPS	3C-P32	CP 700 REMOTE I/O	FU-3	5A
CP 3C CABINET	CP 3C UPS	3C-P32	CP 710 REMOTE I/O	FU-4	5A
CP 3C CABINET	CP 3C UPS	INTERNAL	CP 3C REMOTE I/O	FU-5	5A
CP 710 CABINET	CP 3C CABINET FUSE FU-2	3C-C10	CONVEYOR WASH DOWN SOLENOID	FU-1	5A
CP 710 CABINET		3C-C04A	ROTARY SCREEN #1 LUBE PUMP	FU-2	5A
CP 710 CABINET		3C-C04A	ROTARY SCREEN #1 SOLENOIDS	FU-3	5A
CP 710 CABINET		3C-C05A	ROTARY SCREEN #2 LUBE PUMP	FU-4	5A
CP 710 CABINET		3C-C05A	ROTARY SCREEN #2 SOLENOIDS	FU-5	5A
CP 710 CABINET		FUTURE	ROTARY SCREEN #3 LUBE PUMP	FU-6	5A
CP 710 CABINET		FUTURE	ROTARY SCREEN #3 SOLENOIDS	FU-7	5A

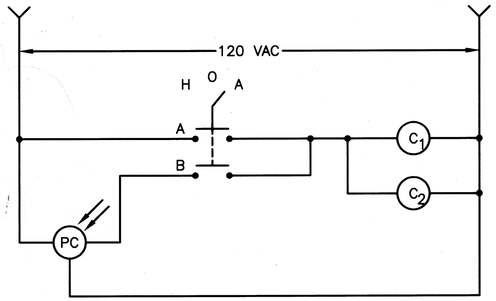

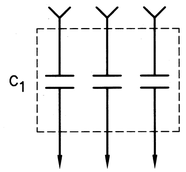

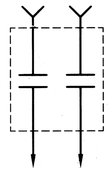

EXTERIOR LIGHTING CONTROL (4 / E-604)

SWITCH STATUS TABLE

OPERATOR POSITION			
CONTACT A	ON	X	X
CONTACT B	X	X	ON

SWITCH LEGEND PLATE: OFF / ON / AUTO

KEYED NOTES:

(1) 277 VOLT LIGHTING CONTACTOR - ONE EACH IN LIGHTING CONTROL SECTONS OF MCC-2C AND MCC-3C.

(2) C_1 IN MCC-2C CONTROLS EXTERIOR LIGHTS ON BUILDING AND STANCHION MOUNTED SITE LIGHTS.

(3) C_1 IN MCC-3C CONTROLS STANCHION MOUNTED SITE LIGHTS.

(4) 240 VOLT LIGHTING CONTACTOR - MCC-3C ONLY. C_2 CONTROLS EXISTING 240 VOLT LIGHT FIXTURES ON EXTERIOR OF 2,400 VOLT SWITCHGEAR BUILDING.

AS BUILT

No.	Date	Revisions	App.

STATE OF TEXAS — LARRY M. BARFIELD — 39337 — REGISTERED PROFESSIONAL ENGINEER — 2-6-08

klotz associates

Binkley & Barfield consulting engineers
1710 Seamist Drive
Houston, Texas 77008-3189
(713) 869-3433

SURVEYED BY: GEOSOLUTIONS | FIELD BOOK NO. : N/A

CITY OF HOUSTON
DEPARTMENT OF PUBLIC WORKS AND ENGINEERING

ALMEDA SIMS WWTP & SPF IMPROVEMENTS PACKAGE I

ELECTRICAL DETAILS - CONTROL SCHEMATICS

FILE NO:	WW4903
WBS:	R-000298-0004-4
DRAWING SCALE	3/16" = 1'-0"
CITY OF HOUSTON PM	IRAJ RANJBAR, P.E.
DWG NO. :	E-604
SHEET NO.	109 OF 109

ACCEPTED & FILED — 44488 — CITY DRAWING NUMBER — HOUSTON, TEXAS

G:\115800 Almeda\CADD_E-604 Details.dwg Feb 07,2008 - 12:55pm swh

COLOR TABLE:

ORIGINAL SCALE IN INCHES FOR REDUCED PLANS
0 1 2 3

CITY OF HOUSTON

DEPARTMENT OF PUBLIC WORKS AND ENGINEERING
ENGINEERING AND CONSTRUCTION DIVISION

ALMEDA SIMS WWTP & SPF IMPROVEMENTS
PACKAGE II

WBS NO. R-000298-0005-4

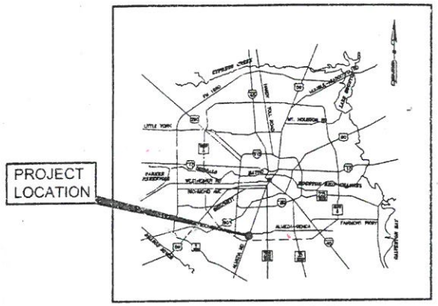

LOCATION MAP

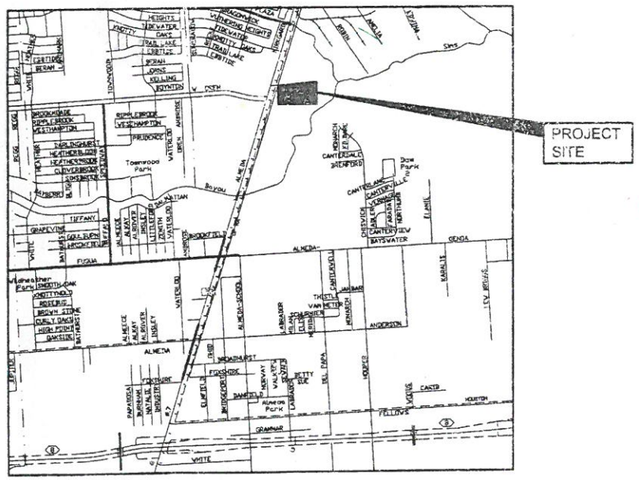

VICINITY MAP
KEY MAP # 572
GIMS MAP #5352C & 5351A

MAYOR
ANNISE D. PARKER

CONTROLLER
RONALD C. GREEN

DISTRICT
COUNCIL MEMBERS

HELENA BROWN DISTRICT A	JERRY DAVIS DISTRICT B	ELLEN COHEN DISTRICT C
WANDA ADAMS DISTRICT D	MIKE SULLIVAN DISTRICT E	AL HOANG DISTRICT F
OLIVER PENNINGTON DISTRICT G	ED GONZALEZ DISTRICT H	JAMES G. RODRIGUEZ DISTRICT I
MIKE LASTER DISTRICT J	LARRY GREEN DISTRICT K	

COUNCIL MEMBERS
AT-LARGE

STEPHEN C. COSTELLO POSITION 1	ANDREW C. BURKS, JR POSITION 2
MELISSA NORIEGA POSITION 3	C.O. "BRAD" BRADFORD POSITION 4
JACK CHRISTIE POSITION 5	

Binkley & Barfield, Inc
consulting engineers
Texas Registration Number F-257
1710 Seamist Drive
Houston, Texas 77008-3189
(713) 869-3433

SURVEYED BY: AMANI ENGINEERING
FB NO. P-5486

STATE OF TEXAS
LI CHUNG CHEN
98576
REGISTERED
PROFESSIONAL ENGINEER
1-9-2012

Tina Yan 2/2/12
WATER

2/20/12
WASTEWATER

NA
STORM WATER

NA
STREET & BRIDGE

2/22/12
CONSTRUCTION

2-21-12
TRAFFIC AND TRANSPORTATION

2/24/2012
SPONSOR DEPARTMENT

2/29/12
CHIEF ENGINEER

3-2-12
CITY ENGINEER DATE

3/6/12
DIRECTOR OF PUBLIC WORKS AND ENGINEERING DATE

PUBLIC WORKS AND ENGINEERING
ACCEPTED & FILED
49061
CITY DRAWING NUMBER
HOUSTON, TEXAS

SHEET NO 1 OF 147 SHEETS

General Drawing - General, and Process Flow Diagrams

1 G-001 Cover Sheet & Location Map
2 G-002 Index Sheet
3 G-003 General Notes
4 G-004 Utility Notes, Abbreviations and Legend
5 G-005 General Civil and Structure Legends
6 G-006 Process Flow Diagram
7 G-007 Process Flow Diagram - Waste Activated Sludge
8 G-008 Existing Non-Potable Water (NPW) Modified Flow Diagram

Civil Drawing - Site Plans

9 C-100 Existing Site Plan - Overall
10 C-101 Proposed Site Plan - Overall
11 C-102 Proposed Site Plan - East Half Only
12 C-103 Survey Control (Sheet 1 of 2)
13 C-104 Survey Control (Sheet 2 of 2)
14 C-105 Screening Facility Demolition (Sheet 1 of 4)
15 C-106 Screening Facility Demolition (Sheet 2 of 4)
16 C-107 Screening Facility Demolition (Sheet 3 of 4)
17 C-108 Screening Facility Demolition (Sheet 4 of 4)

Storm Water Pollution Prevention Plans

18 C-110 Proposed Chemical Feed Facility Driveway (South) Stormwater Pollution Prevention Plan - 1
19 C-111 Proposed Chemical Feed Facility Driveway (North) Stormwater Pollution Prevention Plan - 2
20 C-112 Stormwater Pollution Prevention Plan - 3
21 C-113 SWPPP Details

Access Road Improvements

22 C-200 Proposed Chemical Feed Facility Driveway (North)
23 C-201 Proposed Chemical Feed Facility Driveway (South)

Existing Water Meter Replacement

24 C-300 Exist Water Meter and Backflow Preventer Site Photos
25 C-301 Exist Water Meter Site Plan
26 C-302 Proposed New Water Meter & RPBP Plan & Profile

Existing NPW System Modification

27 C-303 Existing NPW Pump Station and Strainer

Misc Improvement Site Plans

28 C-304 Existing Scum Line Modification Plan

HCFCD Channel C-137-00 Rehabilitation Design

29 C-400 Harris County Express Review Sheet
30 C-401 HCFCD General Notes
31 C-402 HCFCD Channel Survey Detail C137-00-00
32 C-403 HCFCD Unit #C137-00-00 Channel Plan and Profile - Sta. 1+00 to Sta. 6+00
33 C-404 HCFCD Unit #C137-00-00 Channel Plan and Profile - Sta. 6+00 to Sta. 9+50
34 C-405 Cross Sections Sta. 2+00 to 3+50
35 C-406 Cross Sections Sta. 4+00 to 5+50
36 C-407 Cross Sections Sta. 6+00 to 9+50
37 C-407A Cross Sections Sta. 10+00 to 11+00
38 C-408 HCFCD Concrete Head Wall Details
39 C-409 HCFCD Storm Sewer and Riprap Details
40 C-410 HCFCD Concrete Channel Lining Details
41 C-411 Low Flow Channel And Slope Paving Details

NOT IN CONTRACT

Process and Instrumentation Controls Diagram

42 I-100 Process and Instrumentation Diagram Symbols
43 I-101 SCADA Network Schematic
44 I-102 Screening Facilities Layout P&ID
45 I-103 Rotary Screen Details P&ID (1 of 2)
46 I-104 Rotary Screen Details P&ID (2 of 2)
47 I-105 Thickeners and Thickened Sludge Pumps Layout P&ID
48 I-106 Thickener Details P&ID
49 I-107 Clarifier Details P&ID
50 I-108 Chemical Details - Sodium Hypochlorite P&ID
51 I-109 Non-Potable Water Strainer Back Flush System Layout P&ID
52 I-110 Non-Potable Water Strainer Back Flush System Details P&ID

Mechanical Plans & Details

Existing Screening Facility and Thickener Modifications

53 M-100 Mechanical Legend
54 M-101 Sludge Screening Facility Site Plan
55 M-102 Screening Facility Enlarged Plan
56 M-103 Screening Facility East Elevation
57 M-104 Screening Facility Profile
58 M-105 Sludge Thickener Demolition
59 M-106 Existing Sludge Thickener Details
60 M-107 Existing Sludge Thickener Details
61 M-108 Sludge Thickener Proposed Improvements Sheet 1 of 2
62 M-109 Sludge Thickener Proposed Improvements Sheet 2 of 2
63 M-110 Thickened Sludge Pumps Demolition

Clarifiers Improvement

64 M-200 Existing Clarifiers Location Plan & Orientation
65 M-201 Clarifiers Demolition (Sheet 1 of 2)
66 M-202 Clarifiers Demolition (Sheet 2 of 2)
67 M-203 Clarifiers Existing Structural Plan & Section
68 M-204 Clarifiers Proposed Improvements (Sheet 1 of 2)
69 M-205 Clarifiers Proposed Improvements (Sheet 2 of 2)
70 M-206 Clarifiers Effluent Trough Scum Box Details
71 M-207 Clarifiers Miscellaneous Details

Chemical Feed Facility Replacement

72 M-208 Sodium Hypochlorite Building Demolition
73 M-209 Sodium Hypochlorite Piping Demolition
74 M-210 Sodium Hypochlorite Mechanical Flow Diagram
75 M-211 Sodium Hypochlorite - Plan, Section & Details
76 M-212 Sodium Hypochlorite Miscellaneous Details
77 M-213 Sodium Hypochlorite System Plan, Section & Details
78 M-214 Pre & Post Chlorine Analyzer Replacement

NPW Strainers and Backflush Pump Station

79 M-300 Proposed NPW Strainer and Backwash Pump Station Plan
80 M-301 NPW Backwash Pump Station Plan
81 M-302 NPW Backwash Pump Station Section & Details
82 M-303 NPW Strainer Modification Plan
83 M-304 NPW Strainer Modification Profile
84 S-300 NPW Strainer Backflush Pump Basin Structure
85 S-301 NPW Strainer Backflush Pump Basin Structure Detail

Misc Improvement Site Plans

86 M-401 Exist Sludge Pump Station Modification Plan

Electrical Design

Overall Electrical Site Plans

87 E-001 Electrical Site Plan - Overall
88 E-002 Electrical Legends and Symbols
89 E-003 Electrical Notes - General

Thickener #1 Rehabilitation Electrical Plan

90 E-100 Electrical Site Plan - Thickener & Screening Facility Area
91 E-101 Thickener #1 Electrical Demolition Plan
92 E-102 Thickener #1 Area Electrical Plan

MCC-3C Circuitry Revisions

93 E-103 MCC-3C Location - 2.4 KV Switchgear Bldg
94 E-104 MCC-3C Elevation & Panel Schedules
95 E-105 MCC-3C One Line Diagram Sheet 1 of 2
96 E-106 MCC-3C One Line Diagram Sheet 2 of 2

Screening Facility Upgrade

97 E-107 Screening Facilities Modification Plan 1 of 2 Plan View
98 E-108 Screening Facilities Modification Plan 2 of 2 East Elevation

Electrical Demolition Plans

99 E-109 Electrical Demolition 'Old' MCC-3C
100 E-110 'Old' TWAS Pumps 1, 2 & 3 Electrical Demolition
101 E-111 Existing Screening Facility Structure Electrical Demolition

Chemical Feed Facility Replacement - Electrical Plan

102 E-200 Clarifier/NaOCl Area Site Plan - Electrical
103 E-201 Clarifier Proposed Plan - Electrical
104 E-202 Electrical Details & One Line Diagram - Electrical
105 E-203 NaOCl Area Enlarged Plan - Electrical
106 E-204 NaOCl Building Plan - Electrical
107 E-205 Panel Schedules - Electrical

Electrical Schedule & Details

108 E-300 Electrical Site Plan - NPW Area
109 E-301A Electrical Site Plan - NPW Strainer Area
110 E-301B Electrical Site Plan - Backflush Pump Area
111 E-302 MCC-2 Revisions - Demolition
112 E-303 Proposed MCC-2 Revisions - One-Line Diagram
113 E-304 Electrical Load Analyses
114 E-305 Back Flush System Breaker Panel and Conduit/Cable Schedules
115 E-306 Back Flush System Equipment Rack
116 E-307 Back Flush System Electrical Details
117 E-308 NPW Strainer Back Flush System Control Schematic 1 of 7
118 E-309 NPW Strainer Back Flush System Control Schematic 2 of 7
119 E-310 NPW Strainer Back Flush System Control Schematic 3 of 7
120 E-311 NPW Strainer Back Flush System Control Schematic 4 of 7
121 E-312 NPW Strainer Back Flush System Control Schematic 5 of 7
122 E-313 NPW Strainer Back Flush System Control Schematic 6 of 7
123 E-314 NPW Strainer Back Flush System Control Schematic 7 of 7
124 E-400 Conduit & Cable Schedules
125 E-401 Electrical Details - Light Stanchions and Equipment Racks
126 E-402 Electrical Details - Control Schematics
127 E-500 Upsizing of Sludge Transfer Pumps - MCC-2C One-Line Diagram & Details Sheet 1 of 2
128 E-501 Upsizing of Sludge Transfer Pumps - MCC-2C One-Line Diagram & Details Sheet 2 of 2

Standard and Details

129 D-100 Standard Construction Sign Detail
130 D-101 Fence and Gate Details
131 D-102 Bedding and Backfill Details
132 D-103 Storm Drain Type "C" Inlet Detail
133 D-104 Surface Paving Repair Details
134 D-105 Standard Piping Details
135 D-106 Miscellaneous Details
136 D-107 Standard Concrete Paving & Expansion Joint Details
137 D-108 Standard Pavement Details
138 D-109 Stair Details
139 D-110 Standard Reinforcement Concrete Details
140 D-111 Standard Pipe Support Details
141 D-112 Miscellaneous Standard Details
142 D-113 Standard Structural Details
143 D-114 Standard Structural Details Handrails
144 D-115 Fire Service Water Meter And Water Line Standard Details
145 D-116 Standard Pipe Hanger Details

Traffic Control Plans

146 T-100 Proposed Water Meter Work Traffic Control Plan
147 T-101 Proposed Water Meter Work Traffic Control Plan Barricade Details

No.	Date	Revisions	App

STATE OF TEXAS
LI CHUNG CHEN
98576
REGISTERED PROFESSIONAL ENGINEER
1-9-2012

Binkley & Barfield, Inc
consulting engineers
Texas Registration Number F-257
1710 Seamist Drive
Houston, Texas 77008-3189
(713) 869-3433

SURVEYED BY: AMANI ENG. | FIELD BOOK NO. : P-5486

CITY OF HOUSTON
DEPARTMENT OF PUBLIC WORKS AND ENGINEERING

ALMEDA SIMS WWTP & SPF IMPROVEMENTS PACKAGE II

INDEX SHEET

FILE NO:	–
WBS:	R-000298-0005-4
DRAWING SCALE	N/A
CITY OF HOUSTON PM	IRAJ RANJBAR, P.E.
DWG NO. :	G-002
SHEET NO.	2 OF 147

PUBLIC WORKS AND ENGINEERING ACCEPTED & FILED
CITY DRAWING NUMBER 19061
HOUSTON, TEXAS

COLOR TABLE:
G:\115805 Almeda Sims Package II\Cadd Dwgs_G-2 Index.dwg Jan 09,2012 – 8:14am rpd
ORIGINAL SCALE IN INCHES FOR REDUCED PLANS
0 1 2 3

GENERAL NOTES

1. ALL MATERIALS, CONSTRUCTION AND TESTING SHALL BE IN ACCORDANCE WITH THE REQUIREMENTS OF THIS CONTRACT.

2. THE INFORMATION CONTAINED WITHIN THIS SET OF DRAWINGS WITH REGARD TO THE EXISTING FACILITIES WAS TAKEN FROM THE FOLLOWING CITY OF HOUSTON DRAWINGS:

   41635
   44488

   THE ACCURACY OF THE INFORMATION CAN NOT BE GUARANTEED AND ITS USE IN NO WAY RELIEVES THE CONTRACTOR OF ANY RESPONSIBILITY FOR LOSSES DUE TO INACCURACY.

3. CONTRACTOR SHALL FIELD VERIFY ALL DIMENSIONS, LOCATIONS, ELEVATIONS, AND CONDITIONS ON EXISTING FACILITIES BEFORE COMMENCING WORK. IT SHALL BE CONTRACTOR'S RESPONSIBILITY TO REPORT ANY DISCREPANCIES TO THE CITY ENGINEER IMMEDIATELY.

4. THE LOCATION OF ALL UNDERGROUND UTILITIES IS SHOWN IN AN APPROXIMATE WAY. THE CITY EXPECTS THE CONTRACTOR TO PRELOCATE, BY WHATEVER MEANS MAY BE REQUIRED (METAL DETECTION EQUIPMENT, PROBES, EXCAVATION, SURVEY), ALL UNDERGROUND UTILITIES AND FACILITIES BEFORE TRENCHING AND MASS EXCAVATING. CONTRACTOR AGREES TO BE FULLY RESPONSIBLE FOR ANY AND ALL DAMAGES WHICH MIGHT BE CAUSED BY HIS FAILURE TO EXACTLY LOCATE AND PRESERVE THESE UNDERGROUND UTILITIES AND FACILITIES.

5. CONTRACTOR SHALL VERIFY LOCATION OF PRIVATE UNDERGROUND UTILITY LINES BY CONTACTING THE HOUSTON AREA UTILITY COORDINATING COMMITTEE AT 223-4567 OR 1-800-669-8344, FORTY-EIGHT (48) HOURS BEFORE BEGINNING WORK.

6. THE CONTRACTOR SHALL NOTIFY THE CITY ENGINEER 48 HOURS IN ADVANCE OF COMMENCING CONSTRUCTION.

7. CONTRACTOR SHALL CONTACT THE APPROPRIATE GOVERNMENTAL OR PRIVATE AGENCY AT LEAST 48 HOURS BEFORE CONSTRUCTION BEGINS ON FACILITIES NOT IN A CITY OF HOUSTON RIGHT-OF-WAY OR EASEMENT.

8. CONTRACTOR SHALL ASSURE THAT ALL CONSTRUCTION PERMITS HAVE BEEN OBTAINED INCLUDING BUT NOT LIMITED TO ALL CONSTRUCTION PERMITS REQUIRED BY THE "REGULATIONS OF HARRIS COUNTY, TEXAS, FOR FLOOD PLAIN MANAGEMENT", PRIOR TO COMMENCEMENT OF WORK AT NO ADDITIONAL EXPENSE TO THE OWNER. REQUIRED PERMITS THAT CAN ONLY BE ISSUED TO CONTRACTOR WILL BE OBTAINED AT HIS EXPENSE.

9. CONTRACTOR IS CAUTIONED THAT THIS IS AN OPERATING WASTEWATER TREATMENT PLANT AND THE CONTRACTOR MUST TAKE ALL PRECAUTIONS REQUIRED TO INSURE THE OPERABILITY OF THE PLANT INCLUDING, BUT NOT LIMITED TO, COORDINATING THE CONTINUOUS OPERATION OF THE FACILITY WITH THE CITY ENGINEER.

10. CONTRACTOR SHALL COOPERATE AND COORDINATE WITH THE CITY AND OTHER CONTRACTORS WORKING WITHIN THE PROJECT AREA AS PER THE CONTRACT DOCUMENTS.

11. CONTRACTOR SHALL BE RESPONSIBLE FOR ADEQUATELY PROTECTING ALL EXISTING FACILITIES, STRUCTURES, UTILITIES, TREES, AND ALL OTHER ITEMS FROM DAMAGE.

12. ANY DAMAGE TO EXISITNG FACILITIES CAUSED BY CONTRACTOR SHALL BE REPAIRED BY CONTRACTOR AT HIS OWN EXPENSE.

13. EXISTING PAVEMENT, CURBS, SIDEWALKS, AND DRIVEWAYS REMOVED OR DAMAGED DURING CONSTRUCTION SHALL BE REPAIRED OR REPLACED IN ACCORDANCE WITH CITY OF HOUSTON STANDARDS.

14. CONTRACTOR SHALL BE RESPONSIBLE FOR PROVIDING REQUIRED SECURITY TO PROTECT HIS OWN PROPERTY, EQUIPMENT, AND WORK IN PROGRESS.

15. THE CONTRACTOR SHALL CONDUCT HIS OPERATIONS IN A MANNER SUCH THAT TRUCKS AND OTHER CONSTRUCTION RELATED VEHICLES DO NOT CREATE A DIRT NUISANCE OR SAFETY HAZARD IN ANY STREETS, PUBLIC OR PRIVATE. THE CONTRACTOR SHALL CLEAN DIRT FROM ALL STREETS ON A DAILY BASIS.

16. CONTRACTOR SHALL REMOVE ALL TRASH, EXCESS MATERIAL DEBRIS, ETC. FROM THE SITE UPON COMPLETION OF PROJECT PRIOR TO INSPECTION AND APPROVAL BY THE OWNER AND APPROVING AGENCIES.

17. ADEQUATE DRAINAGE SHALL BE MAINTAINED AT ALL TIMES DURING CONSTRUCTION AND ANY DRAINAGE DITCH OR STRUCTURE DISTURBED DURING CONSTRUCTION SHALL BE RESTORED TO THE SATISFACTION OF THE OWNING AUTHORITY.

18. PLACEMENT OF ALL SIGNS, MARKINGS, AND BARRICADES SHALL BE IN ACCORDANCE WITH THE CITY OF HOUSTON STANDARD DETAIL SHEET, "TYPICAL URBAN CONSTRUCTION SIGN". SIGN COLORS AND LAYOUT SHALL BE IN ACCORDANCE WITH THE TEXAS MANUAL ON UNIFORM TRAFFIC CONTROL DEVICES (TMUTCD), LATEST EDITION.

19. CONTRACTOR SHALL COMPLY WITH OSHA REGULATIONS AND STATE OF TEXAS LAW CONCERNING EXCAVATION, TRENCHING AND SHORING AS SPECIFIED IN CITY OF HOUSTON ORDINANCE #87-1457.

20. ALL WORK SHALL BE COMPLETED TO THE SATISFACTION OF THE CITY ENGINEER.

21. ALL ITEMS SHOWN ARE PROPOSED UNLESS NOTED OTHERWISE.

22. GRASS AND BUSHES IN THE SURROUNDING CONSTRUCTION AREA SHALL BE PROVIDED BY CONTRACTOR MATCHING THE EXISTING IN PLACE AND IN ACCORDANCE W/COH STANDARDS.

STRUCTURAL DESIGN LOADS

1. ALL DESIGN LOADS AS PER CITY OF HOUSTON BUILDING CODE (BASED ON INTERNATIONAL BUILDING CODE, LATEST EDITION (2000))

2. FLOOR LOADS - LIVE LOAD 150 P.S.F. MINIMUM (LARGER EQUIPMENT LOADS USED WHERE APPLICABLE).

3. ROOF LOADS - LIVE LOAD 20 P.S.F. MINIMUM IN ADDITION TO LOADS DUE TO THE ACCUMULATION OF STORMWATER (LARGER LIVE LOADS USED WHERE APPLICABLE).

4. WIND LOADS - BASIC WIND SPEED 110 M.P.H., EXPOSURE "C"

5. EARTHQUAKE ZONE - 0

MASONRY

1. THE ANCHORAGE OF ALL CONCRETE MASONRY WALLS SHALL BE DESIGNED TO RESIST A MINIMUM HORIZONTAL FORCE OF 200 P.L.F.

2. THE MINIMUM COMPRESSIVE STRENGTH OF THE MASONRY WALL ASSEMBLAGE SHALL BE 1500 P.S.I.

3. ALL MASONRY SHALL MEET THE FOLLOWING REQUIREMENTS AS APPLICABLE:

CLAY MASONRY LOAD BEARING AND NON-LOAD BEARING	ASTM 216 GRADE SW
CONCRETE BLOCK MASONRY LOAD BEARING AND NON-LOAD BEARING	ASTM C90, GRADE N, TYPE I f'm = 2000 P.S.I.
MORTAR	ASTM C270, TYPE S f'c = 2000 P.S.I.
REINFORCING STEEL COLD DRAWN STEEL WIRE	ASTM A82
DEFORMED AND PLAIN BILLET-STEEL BARS	ASTM A 615, GRADE 60

HARRIS COUNTY FLOOD CONTROL DISTRICT NOTES

1. NOTIFY THE HARRIS COUNTY FLOOD CONTROL DISTRICT, PROPERTY MANAGEMENT DEPARTMENT IN WRITING AT LEAST 48 HOURS PRIOR TO CONSTRUCTION. SUBMIT THE HCFCD 48 HOUR PRE-CONSTRUCTION NOTIFICATION FORM AND A COPY OF THE APPROVED CONSTRUCTION DRAWINGS TO HCFCD 9900 NORTHWEST FREEWAY, HOUSTON, TEXAS 77092, ATTN: PROPERTY MANAGEMENT DEPT.

2. ENGINEER SHALL SUBMIT CERTIFICATION LETTER AND RECORD DRAWINGS TO THE HARRIS COUNTY FLOOD CONTROL DISTRICT PROPERTY MANAGEMENT DEPARTMENT, REQUESTING INSPECTION OF ITEMS CONSTRUCTED IN HARRIS COUNTY FLOOD CONTROL DISTRICT RIGHT-OF-WAY. PRIOR TO REQUESTING INSPECTION, THE DRAINAGE RIGHT-OF-WAY AND/OR EASEMENTS SHALL BE STAKED AND FLAGGED.

3. PROTECT, MAINTAIN, AND RESTORE EXISTING BACKSLOPE DRAINAGE SYSTEMS.

4. BACKSLOPE SWALE AND INTERCEPTOR STRUCTURE ELEVATIONS AND LOCATIONS SHOWN ON PLANS ARE APPROXIMATE. FINAL ELEVATIONS AND LOCATIONS SHALL BE FIELD VERIFIED BY THE ENGINEER PRIOR TO INSTALLATION.

5. ESTABLISH TURF GRASS ON ALL DISTURBED AREAS WITHIN THE CHANNEL OR DETENTION RIGHT-OF-WAY, EXCEPT THE CHANNEL BOTTOM AND WHERE STRUCTURAL EROSION MEASURES ARE USED. MINIMUM ACCEPTANCE CRITERIA ARE 75% COVERAGE OF LIVE BERMUDA GRASS AND NO EROSION OR RILLS DEEPER THAN 4".

6. BACKFILL IN ACCORDANCE WITH THE HARRIS COUNTY FLOOD CONTROL DISTRICT STANDARD SPECIFICTION, SECTION 02315 - EXCAVATING AND BACKFILLING, OR EQUIVALENT.

7. EXCAVATE CHANNEL FLOWLINE TO DESIGN ELEVATION AS SHOWN ON PLANS AND DOWNSTREAM, AS NECESSARY, TO ENSURE NO WATER IN STORM SEWER DURING "DRY" CONDITIONS.

8. MAINTAIN FLOW IN CHANNEL DURING CONSTRUCTION AND RESTORE CHANNEL TO ORIGINAL CONDITION.

9. REMOVE ALL EXCAVATED MATERIAL FROM THE HARRIS COUNTY FLOOD CONTROL DISTRICT OR DRAINAGE RIGHT-OF-WAY. NO FILL IS TO BE PLACED WITHIN A DESIGNATED FLOOD PLAIN AREA WITHOUT FIRST OBTAINING A FILL PERMIT FROM THE APPROPRIATE JURISDICTIONAL AUTHORITY.

10. OBTAIN AND COMPLY WITH ALL APPLICABLE CITY, COUNTY, STATE, AND FEDERAL PERMITS AND APPROVALS, WITH ASSISTANCE FROM ENGINEER, IF NECESSARY.

HIGH STRENGTH BOLTING

1. ALL CARBON STEEL HIGH STRENGTH BOLTS SHALL BE ASTM A325. ALL STAINLESS BOLTS SHALL BE ASTM A193, TYPE 316. BOLTS FOR BOLTED CONNECTIONS TO BE DESIGNED FOR BEARING TYPE CONNECTIONS. THREADS ARE REQUIRED BY DESIGN TO BE EXCLUDED FROM THE SHEAR PLANE.

STEEL

1. ALL CARBON STRUCTURAL STEEL SHAPES AND PLATES SHALL CONFORM TO ASTM A36, MINIMUM YIELD STRENGTH, FY = 36,000 P.S.I.

2. ALL CARBON STRUCTURAL TUBES AND PIPES SHALL CONFORM TO ASTM A500 GRADE B84 MINIMUM YIELD STRENGTH, FY = 42,000 P.S.I.

3. ALL STAINLESS STEEL STRUCTURAL SHAPES AND PLATES SHALL CONFORM TO ASTM A167, TYPE 316 MINIMUM YIELD STRENGTH, FY=25,000 P.S.I.

4. ALL STRUCTURAL STEEL DETAILS AND CONNECTIONS SHALL CONFORM TO AMERICAN INSTITUTE OF STEEL CONSTRUCTION.

5. ALL WELDING SHALL CONFORM TO THE AMERICAN WELDING SOCIETY.

CONCRETE

1. MINIMUM COMPRESSIVE STRENGTH AT 28 DAYS.

CLASS A, B, C, AND E	4000 P.S.I.
CLASS D	3000 P.S.I.

2. CLASS USE

   A STRUCTURAL CONCRETE, FOOTINGS SLABS, WALLS, AND COLUMNS FOR ALL WATER RETAINING STRUCTURES.

   B STRUCTURAL CONCRETE, SLABS, WALLS, FOOTINGS, MANHOLES, PULL BOXES, CONCRETE PIPE SUPPORTS, CONCRETE FILL, DRILLED PIERS, GRADE BEAMS, SEAL SLABS AND OTHER STRUCTURAL CONCRETE WORK NOT OTHERWISE INDICATED.

   B EXTERIOR CONCRETE, PAVEMENTS.

   C EXTERIOR CONCRETE, SIDEWALKS, SLOPE PAVING AND EXPOSED EXTERIOR FLATWORK.

   D ENCASEMENT CONCRETE, PIPE AND ELECTRICAL CONDUIT ENCASEMENT, FILL OF ABANDONED/CUT PIPE, AND TO COVER REINFORCEMENT STEEL EXTENDED FOR FUTURE.

   E CLARIFIER TOPPING, ALL CLARIFIER SLAB TOPPINGS.

3. REINFORCING STEEL SHALL CONFORM TO ASTM A 615, GRADE 60. WELDED WIRE FABRIC SHALL CONFORM TO ASTM A 185.

4. PLACING OF REINFORCING AND FORM WORK SHALL CONFORM TO ACI CODE 318, LATEST EDITION.

5. CHAMFER EXPOSED CORNERS 3/4" AT 45° UNLESS OTHERWISE SHOWN.

6. SMOOTH FORM FACING MATERIAL SHALL BE USED FOR ALL CONCRETE. CONCRETE THAT WILL HAVE SURFACES EXPOSED ABOVE FINISHED GRADE SHALL HAVE A SMOOTH RUBBED FINISH.

7. REINFORCING STEEL BENDS, STANDARD HOOKS, DETAILS, AND OTHER DETAILING OF REINFORCING THAT IS NOT SPECIFIED ON THE DRAWINGS SHALL CONFORM TO ACI DETAILING MANUAL, LATEST EDITION.

8. ANCHOR BOLTS SHALL BE ASTM A193 TYPE 316 STAINLESS STEEL PER SIZE SHOWN WITH APPROPRIATE ANTI-SEIZE COMPOUND AND MAY BE PLACED EITHER PRIOR TO PLACING CONCRETE, OR AFTER CONCRETE HAS CURED.

9. GROUT FOR ANCHOR BOLTS AND DOWELS TO BE ADJUSTED AFTER CONCRETE HAS CURED SHALL BE A NON SHRINKING GROUT WITH A MINIMUM 28 DAY COMPRESSIVE STRENGTH OF 8,000 P.S.I. EPOXY/VINYLESTER OR EPOXY ADHESIVE SHALL BE USED FOR CONCRETE ANCHORS AS SHOWN ON THE DRAWINGS OR AS APPROVED BY CITY ENGINEER.

GEOTECHNICAL NOTES

1. ALL INFORMATION OBTAINED FROM GEOTECHNICAL CONSULTANTS, INCLUDING SUBSURFACE DATA, LOGS OF SOIL BORINGS, AND RECOMMENDATIONS, IS AVAILABLE TO THE CONTRACTOR FOR INFORMATION ONLY. THE CONTRACTOR IS RESPONSIBLE FOR VERIFYING SUBSURFACE CONDITIONS AT THE PROJECT SITE, AND IT IS EXPRESSLY UNDERSTOOD THAT NEITHER THE ENGINEER NOR THE CITY WILL BE RESPONSIBLE FOR ANY INTERPRETATION OR CONCLUSIONS DRAWN FROM ANY GEOTECHNICAL INFORMATION PROVIDED TO THE CONTRACTOR.

2. GEOTECHNICAL BORINGS WITHIN THE PROJECT AREA WERE COMPLETED BY AVILES ENGINEERS INC.

3. BORING LOCATIONS SHOWN IN THE PLANS ARE APPROXIMATE AND SHOWN ON PROJECT SITE PLAN

SBC FACILITIES

1. THE LOCATIONS OF SOUTHWESTERN BELL TELEPHONE CO. FACILITIES ARE SHOWN IN AN APPROXIMATE WAY ONLY. THE CONTRACTOR SHALL DETERMINE THE EXACT LOCATION BEFORE COMMENCING WORK. HE AGREES TO BE FULLY RESPONSIBLE FOR ANY AND ALL DAMAGES WHICH MIGHT BE OCCASIONED BY HIS FAILURE TO EXACTLY LOCATE AND PRESERVE THESE UNDERGROUND UTILITIES.

2. THE CONTRACTTOR SHALL CALL 1-800-344-8377 A MINIMUM OF 48 HOURS PRIOR TO CONSTRUCTION TO HAVE UNDERGROUND LINES FIELD LOCATED.

3. WHEN EXCAVATING WITHIN EIGHTEEN INCHES (18") OF THE INDICATED LOCATION OF SBC FACILITIES, ALL EXCAVATION MUST BE ACCOMPLISHED USING NON-MECHANIZED EXCAVATION PROCEDURES. WHEN BORING, THE CONTRACTOR SHALL EXPOSE THE SBC FACILITIES.

4. WHEN SBC FACILITIES ARE EXPOSED, THE CONTRACTOR WILL PROVIDE SUPPORT TO PREVENT DAMAGE TO THE CONDUIT DUCTS OR CABLES. WHEN EXCAVATING NEAR TELEPHONE POLES THE CONTRACTOR SHALL BRACE THE POLE FOR SUPPORT.

TO ARRANGE FOR LINES TO BE TURNED OFF OR MOVED, CALL CENTERPOINT AT 713-207-7777.

PRIVATE UTILITY LINES SHOWN
AT LEAST 48 HOURS BEFORE EXCAVATING IN STREET R.O.W. OR EASEMENTS CALL THE LONE STAR NOTIFICATION 713-223-4567.

Date:
CenterPoint Energy/Electric Facilities
(Approval only for crossing underground ductlines, unless otherwise noted.)
Valid at time of review only.

Date:
SBC Approved for underground conduit facilities only.
Signature valid for one year.

Date:
CenterPoint Energy/Gas Facilities
(Gas service lines are not shown)

No.	Date	Revisions	App.

STATE OF TEXAS
LI CHUNG CHEN
98576
REGISTERED PROFESSIONAL ENGINEER
9-21-2011

Binkley & Barfield, Inc
consulting engineers
Texas Registration Number F-257
1710 Seamist Drive
Houston, Texas 77008-3189
(713) 869-3433

SURVEYED BY: AMANI ENG. | FIELD BOOK NO. : P-5486

CITY OF HOUSTON
DEPARTMENT OF PUBLIC WORKS AND ENGINEERING

ALMEDA SIMS WWTP & SPF IMPROVEMENTS PACKAGE II

GENERAL

FILE NO:
WBS: R-000
DR

G:\115805 Almeda Sims Package II\Cadd Dwgs_G-3 General Notes.dwg Feb 22,2012 - 10:58am rpd

ENVIRO-RD.ctb
COLOR TABLE:

ORIGINAL SCALE IN INCHES FOR REDUCED PLANS
0 1 2 3

C:\115805 Almeda Sims Package II\Cadd Dwgs\G-4 General Notes, Abbreviations and Legend.dwg Feb 22,2012 - 11:00am rjd

UTILITY NOTES

CENTERPOINT ENERGY (GAS FACILITIES):

CAUTION: UNDERGROUND GAS FACILITIES:
LOCATION OF CENTERPOINT ENERGY MAIN LINES (TO INCLUDE UNIT GAS TRANSMISSION AND/OR INDUSTRIAL GAS SUPPLY CORPORATION WHERE APPLICABLE) ARE SHOWN IN AN APPROXIMATE LOCATION ONLY. SERVICE LINES ARE USUALLY NOT SHOWN. OUR SIGNATURE ON THESE PLANS ONLY INDICATES THAT OUR FACILITIES ARE SHOWN IN APPROXIMATE LOCATION. IT DOES NOTE IMPLY THAT A CONFLICT ANALYSIS HAS BEEN MADE. CONTACT THE UTILITY COORDINATING COMMITTEE AT (713) 223-4567 OR (800) 669-8344 A MINIMUM OF 48-HOURS PRIOR TO CONSTRUCTION TO HAVE MAIN AND SERVICE LINES FIELD LOCATED.

1. WHEN CENTERPOINT ENERGY PIPELINE MARKINGS ARE NOT VISIBLE, CALL (713) 967-8037 (7:00 A.M. TO 4:30 P.M.) FOR STATUS OF LINE LOCATION REQUEST BEFORE EXCAVATION BEGINS.
2. WHEN EXCAVATING WITHIN EIGHTEEN (18) INCHES OF THE INDICATED LOCATION OF CENTERPOINT ENERGY FACILITIES, ALL EXCAVATION MUST BE ACCOMPLISHED USING NON-MECHANIZED EXCAVATION PROCEDURES.
3. WHEN CENTERPOINT ENERGY FACILITIES ARE EXPOSED, SUFFICIENT SUPPORT MUST BE PROVIDED TO THE FACILITIES TO PREVENT EXCESSIVE STRESS ON THE PIPING.
4. CONTRACTOR IS FULLY RESPONSIBLE FOR ANY DAMAGES CAUSED BY THE CONTRACTOR'S FAILURE TO EXACTLY LOCATE AND PRESERVE THESE UNDERGROUND FACILITIES.

CENTERPOINT ENERGY (ELECTRICAL FACILITIES):

1. OVERHEAD LINES MAY EXIST ON THE PROPERTY, WE HAVE NOT ATTEMPTED TO MARK THOSE LINES SINCE THEY ARE CLEARLY VISIBLE. LOCATE SUCH LINES PRIOR TO BEGINNING ANY CONSTRUCTION. TEXAS LAW, SECTION 752, HEALTH AND SAFETY CODE, FORBIDS ALL ACTIVITIES IN WHICH PERSONS OR THINGS MAY COME WITHIN 6-FEET OF LIVE OVERHEAD HIGH VOLTAGE LINES. PARTIES RESPONSIBLE FOR THE WORK INCLUDING CONTRACTORS, ARE LEGALLY RESPONSIBLE FOR THE SAFETY OF CONSTRUCTION WORKERS UNDER THIS LAW. THIS LAW CARRIES BOTH CRIMINAL AND CIVIL LIABILITY. TO ARRANGE FOR LINES TO BE TURNED OFF OR REMOVED CALL CENTERPOINT ENERGY AT (713) 207-7777.
2. COORDINATE WITH CENTERPOINT ENERGY ELECTRIC BEFORE WORKING WITHIN 10-FEET OF OVERHEAD POWER LINES. CONTACT CENTERPOINT ENERGY ELECTRIC REPRESENTATIVES AT (713) 207-7777 OR (713) 923-3292 FOR POLES TO BE BRACED AND LINES TO BE DE-ENERGIZED AND/OR MOVED. CONTRACTOR SHALL BE RESPONSIBLE TO CENTERPOIN ENERGY ELECTRIC FOR ANY COSTS ASSOCIATED WITH BRACING OF POWER POLES OR DE-ENERGIZING AND/OR MOVING ANY CONFLICTING OVERHEAD POWER LINES.
3. TO STAKE CENTERPOINT ENERGY ELECTRIC UNDERGROUND FACILITIES, CALL THE LONE STAR INFORMATION CENTER AT (713) 223-4567, OR TOLL FREE AT (800) 669-8344, AT LEAST 48-HOURS BEFORE STARTING EXCAVATION.
4. PRIVATE UNDERGROUND ELECTRICAL FACILITIES MAY EXIST IN THE AREA AND THESE WILL NOT BE STAKED BY CENTERPOINT ENERGY ELECTRIC PERSONNEL.

SBC FACILITIES

1. THE LOCATIONS OF SBC FACILITIES ARE SHOWN IN AN APPROXIMATE WAY ONLY. DETERMINE THE EXACT LOCATION BEFORE COMMENCING WORK. CONTRACTOR AGREES TO BE FULLY RESPONSIBLE FOR ANY AND ALL DAMAGES WHICH MIGHT BE OCCASIONED BY HIS/HER FAILURE TO EXACTLY LOCATE AND PRESERVE THESE UNDERGROUND UTILITIES.
2. CALL (800) 344-8377 A MINIMUM OF 48 HOURS PRIOR TO CONSTRUCTION TO HAVE UNDERGROUND LINES FIELD LOCATED.
3. WHEN EXCAVATING WITHIN EIGHTEEN INCHES (18") OF THE INDICATED LOCATION OF SBC FACILITIES, ALL EXCAVATIONS MUST BE ACCOMPLISHED USING NON- MECHANIZED EXCAVATION PROCEDURES. WHEN BORING, EXPOSE SBC FACILITIES.
4. WHEN SBC FACILITIES ARE EXPOSED, PROVIDE SUPPORT TO PREVENT DAMAGE TO THE CONDUIT DUCTS OR CABLES. WHEN EXCAVATING NEAR TELEPHONE POLES, BRACE FOR SUPPORT.

DRAWING SYMBOLS LEGEND

EXISTING

- EXISTING STRUCTURES AND SITE BACKGROUND
- EXISTING CENTERLINE OF DITCH
- EXISTING EDGE OF ROAD
- EXISTING ELECTRIC
- EXISTING BARBED WIRE FENCE
- EXISTING CHAINLINK FENCE
- EXISTING TOP OF BANK
- EXISTING TOE OF BANK
- EXISTING ABOVE GROUND PIPING
- EXISTING UNDERGROUND PIPING
- EXISTING TO BE REMOVED
- EXISTING MANHOLE (MH)
- EXISTING SPOT ELEVATION
- TEMPORARY BENCHMARK (TBM)
- DIRECTION OF FLOW
- WATER VALVE (WV)
- POWER POLE

PROPOSED

- PROPOSED STRUCTURES
- FUTURE STRUCTURES
- CENTERLINE OF PROPOSED DRAINAGE SWALE
- EDGE OF PROPOSED ROAD
- PROPOSED CHAINLINK FENCE
- PROPERTY LINE
- PROPOSED ABOVE GROUND PIPING
- PROPOSED BURIED PIPING < 24"
- PROPOSED BURIED PIPING > 24"
- PROPOSED SILT FENCE
- PROPOSED SPOT ELEVATION (×34.0)

GENERAL, CIVIL & PROCESS ABBREVIATIONS

ADDL	ADDITIONAL
ACH	AIR CONDITIONING/HEATING UNIT
ALT	ALTERNATE
AM	AMMONIA
AVG	AVERAGE
℄	CENTER LINE
CFM	CUBIC FEET PER MINUTE
CLR	CLEAR DISTANCE
CFS	CUBIC FEET PER SECOND
DISH	DISCHARGE
EF	EACH FACE
EL	ELEVATION
EXIST	EXISTING
FG	FINISHED GRADE
FL	FLOW LINE
GALV	GALVANIZED
GPM	GALLONS PER MINUTE
HP	HIGH POINT
HWL	HIGH WATER LEVEL
IE	INVERT ELEVATION
LP	LOW POINT
LWL	LOW WATER LEVEL
MAX	MAXIMUM
MGD	MILLION GALLONS PER DAY
MH	MANHOLE
MIN	MINIMUM
MISC	MISCELLANEOUS
NG	NATURAL GROUND
OPNG	OPENING
PK	PEAK
PROP	PROPOSED
REF	REFERENCE
REQD	REQUIRED
SHT	SHEET
SIM	SIMILAR
SPECS	SPECIFICATIONS
SS	STAINLESS STEEL
SUP	SUPPORT
TYP	TYPICAL
UNO	UNLESS NOTED OTHERWISE
WS	WATER SURFACE
YH	YARD HYDRANT

VALVE ABBREVIATIONS

ARV	AIR RELEASE VALVE
AVRV	AIR/VACUUM RELEASE VALVE
CV	CHECK VALVE
GV	GATE VALVE
PV	PLUG VALVE
SV	SOLENOID VALVE
TV	TELESCOPING VALVE

PIPING ABBREVIATIONS

BOP	BOTTOM OF PIPE
DIP	DUCTILE IRON PIPE
DIPUL	DUCTILE IRON UNLINED PIPE
FCA	FLANGED COUPLING ADAPTER
FE	FLANGED END
GALV. STL.	GALVANIZED STEEL
MJ	MECHANICAL JOINT
PE	PLAIN END
PO	PUSH ON
PT	POLYETHYLENE TUBING
PVC	POLYVINYL CHLORIDE
WC	WALL COLLAR

SERVICE ABBREVIATIONS

BP	BY-PASS
CE	CLARIFIER INFLUENT
CO	CLEAN OUT
DA	DIFFUSED AIR
DR	DRAIN
DWS	DEWATERED SLUDGE
ED	EQUIPMENT DRAIN
EFF	EFFLUENT
FI	FILTRATE
FM	FORCEMAIN
ML	MIXED LIQUOR
NPW	NONPOTABLE WATER
PA	PLANT AIR
PD	PLANT DRAIN
PE	PLANT EFFLUENT
PW	POTABLE WATER
RAS	RETURN ACTIVATED SLUDGE
RS	RAW SEWAGE
SS	SANITARY SEWER
SE	SETTLED EFFLUENT
SN	SUPERNATANT
TKD	TANK DRAIN
TS	THICKENED SLUDGE
TWAS	THICKENED WASTE ACTIVATED SLUDGE
WAS	WASTE ACTIVATED SLUDGE

SECTIONS AND DETAILS

ON SHEETS WHERE SECTION IS CUT AND SHOWN:
A / – : SECTION IDENTIFICATION; SECTION SHOWN ON SAME SHEET

ON SHEETS WHERE SECTION IS CUT:
A / C2 : SECTION IDENTIFICATION; SHEET WHERE SECTION IS SHOWN

ON SHEETS WHERE SECTION IS SHOWN:
A / C6 : SECTION IDENTIFICATION; SHEET WHERE SECTION IS CUT

ON SHEETS WHERE SECTION IS SHOWN:
SECTION A — SCALE: (SEE SHT H-1) : SECTION IDENTIFICATION; SHEETS WHERE SECTION IS CUT

ON SHEETS WHERE DETAIL IS IDENTIFIED AND SHOWN
1 / – : DETAIL IDENTIFICATION; SHEET WHERE DETAIL IS SHOWN

ON SHEETS WHERE DETAIL IS IDENTIFIED:
1 / S8 : DETAIL IDENTIFICATION; SHEET WHERE DETAIL IS SHOWN

ON SHEETS WHERE DETAIL IS SHOWN:
1 / S2 : DETAIL IDENTIFICATION; SHEET WHERE DETAIL IS IDENTIFIED

ON SHEETS WHERE DETAIL IS SHOWN:
DETAIL 1 — SCALE: (SEE SHT H-1) : DETAIL IDENTIFICATION; SHEETS WHERE DETAIL IS IDENTIFIED

STRUCTURAL ABBREVIATIONS

ADDL	ADDITIONAL
&	AND
ARCH	ARCHITECTURAL
BM	BEAM
BOS	BOTTOM OF STEEL
BOT	BOTTOM
BLDG	BUILDING
℄	CENTER LINE
c/c	CENTER TO CENTER
CLR	CLEAR(ANCE)
COL	COLUMN
CONC	CONCRETE
CONST	CONSTRUCTION
CONT.	CONTINUOUS
DIA	DIAMETER
ø	DIAMETER
DWL	DOWEL
EA	EACH
EF	EACH FACE
EL	ELEVATION
EQ	EQUAL
EW	EACH WAY
EXP	EXPANSION
EXT	EXTERIOR
FDN	FOUNDATION
FF	FINISHED FLOOR
FTG	FOOTING
HP	HIGH POINT
HORIZ	HORIZONTAL
JT	JOINT
LLH	LONG LEG HORIZONTAL
LLV	LONG LEG VERTICAL
LP	LOW POINT
MAX	MAXIMUM
MISC	MISCELLANEOUS
#	NUMBER
OPNG	OPENING
R	RADIUS
REINF	REINFORCEMENT
REQD	REQUIRED
SCHED	SCHEDULE
SECT	SECTION
SP	SPACES
SS	STAINLESS STEEL
STD	STANDARD
T	TOP
TOC	TOP OF CONCRETE
TOG	TOP OF GROUT
TOS	TOP OF STEEL
VAR	VARIES
VERT	VERTICAL
w/	WITH

No.	Date	Revisions	App.

LI CHUNG CHEN 98576 REGISTERED PROFESSIONAL ENGINEER
9-21-2011

Binkley & Barfield, Inc
consulting engineers
Texas Registration Number F-257
1716 Seamist Drive
Houston, Texas 77008-3189
(713) 869-3433

SURVEYED BY: AMANI ENG. | FIELD BOOK NO. : P-5486

CITY OF HOUSTON
DEPARTMENT OF PUBLIC WORKS AND ENGINEERING

ALMEDA SIMS WWTP & SPF IMPROVEMENTS PACKAGE II

UTILITY NOTES, ABBREVIATIONS AND LEGEND

FILE NO:	–
WBS: R-000298-0005-4	
DRAWING SCALE	NONE
CITY OF HOUSTON PM	IRAJ RANJBAR, P.E.
DWG NO. :	G-004
SHEET NO.	4 OF 147

PUBLIC WORKS AND ENGINEERING ACCEPTED & FILED 49061 CITY DRAWING NUMBER HOUSTON, TEXAS

COLOR TABLE:

ORIGINAL SCALE IN INCHES FOR REDUCED PLANS
0 1 2 3

GENERAL LEGEND

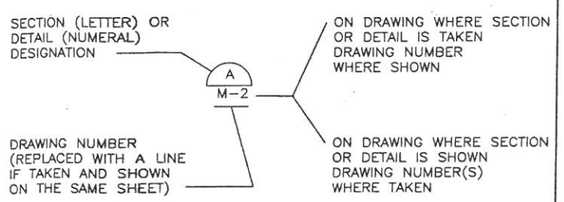

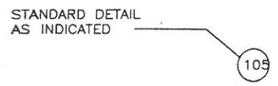

DETAIL AND SECTION DESIGNATION

1	99	SEE CIVIL AND YARD PIPING DRAWINGS
100	199	SEE ARCHITECTURAL DRAWINGS
200	299	SEE STRUCTURAL DRAWINGS
300	399	SEE MECHANICAL DRAWINGS
400	499	SEE ELECTRICAL DRAWINGS
500	599	SEE INSTRUMENTATION AND CONTROL DRAWINGS

STANDARD DETAIL DESIGNATION

GENERAL NOTES:

1. FACILITIES ARE SHOWN HEAVY LINED. SCREENING IS USED IN ORDER TO CLARIFY DRAWINGS. FOR EXAMPLE, STRUCTURES ARE SCREENED ON MECHANICAL DRAWINGS TO HIGH-LITE PIPING AND EQUIPMENT.
2. DEMOLITION WORK IS SHOWN BY SHOWING FACILITIES TO BE REMOVED CROSS HATCHED.
3. "FLOOR LINE" REFERS TO TOP OF CONCRETE SLABS. FINISH FLOORING IS INSTALLED ABOVE THE FLOOR LINE. FOR DEPRESSED FLOORS AND CURBS, SEE STRUCTURAL DRAWINGS.
4. REPETITIVE FEATURES ARE NOT DRAWN IN THEIR ENTIRETY AND SHALL BE COMPLETELY PROVIDED AS IF DRAWN IN FULL.
5. AT SOUND INSULATED WALLS, FULL HEIGHT PARTITIONS SHALL BE SEALED BOTH SIDES WITH ACOUSTIC SEALANT; TOP, BOTTOM, INTERSECTIONS, DOOR FRAMES, GLAZED OPENING FRAMES AND OTHER PENETRATIONS.
6. LINE OF EXISTING GRADES, AS SHOWN ON THE BUILDING ELEVATIONS AND SECTIONS ARE APPROXIMATE. THEY ARE AT THE BUILDING FACE, OR ON THE SECTION END EXCEPT AS NOTED.
7. VERIFY ALL ROUGH-IN DIMENSIONS FOR EQUIPMENT PROVIDED IN THIS CONTRACT, OR BY OTHERS.
8. REFER TO ARCHITECTURAL, STRUCTURAL, MECHANICAL, ELECTRICAL AND OTHER CATEGORIES OF DRAWINGS FOR ADDITIONAL NOTES.
9. VERIFY SIZE AND LOCATION OF, AND PROVIDE: ALL OPENINGS THROUGH FLOORS AND WALLS, ACCESS DOORS, FURRING, CURBS, ANCHORS AND INSERTS. PROVIDE ALL BASES, BLOCKING REQUIRED FOR ACCESSORIES, MECHANICAL, ELECTRICAL AND OTHER EQUIPMENT.

CIVIL LEGEND

SYMBOL	LEGEND
⊗ 200.0	PROPOSED SPOT ELEVATION
X 200.8	EXISTING SPOT ELEVATION
	MATCH LINE
R/W	RIGHT-OF-WAY
100	EXISTING CONTOUR (SHOWN SCREENED)
100	PROPOSED FOOT CONTOUR (SHOWN BOLD)
P	PROPERTY LINE
	CENTERLINE
	TO BE REMOVED
	GRAVEL OR RIPRAP SURFACE
	DEDUCT ALTERNATES
X X	FENCE
	DRAINAGE DIRECTIONAL ARROWS
B-1	TEST BORING LOCATION
	SLOPE BREAK
N10000 E10000	CONSTRUCTION COORDINATE
4:1 (2%)	SLOPE DIRECTION AND MAGNITUDE
	COORDINATE GRID MARK
PP	POWER POLE
CB-1	CATCH BASIN
MH-1	MANHOLE
OE	OVERHEAD ELECTRICAL
UE	UNDERGROUND ELECTRICAL
EPB	ELECTRICAL PULL BOX
EMH	ELECTRICAL MANHOLE

NOTE:
SCREENED SYMBOLS INDICATE EXISTING.

ARCHITECTURAL LEGEND/STRUCTURAL LEGEND

SYMBOL	LEGEND
	INDICATES PAIR OF DOORS • INDICATES ACTIVE DOOR
DIRECTION SHOWN 1 / A-1	INTERIOR WALL ELEVATION
1	COLUMN GRID LINE NUMBER
L-1 / 0IA	TYPE LOUVER
W-1 / 0IA	WINDOW TAG
S-2A	TYPE SIGN
100	ROOM NUMBER
A	DOOR DESIGNATION
	CONCRETE OR PRECAST
	CMU (PLAN)
	CMU (SECTION)
	BATT INSULATION
	STEEL STUD WALL (PLAN)
	GYPSUM WALLBOARD
	PLYWOOD
	STEEL OR ALUM AS INDICATED
	WOOD, FINISHED
	WOOD, ROUGH CONTINUOUS
	WOOD, ROUGH NON-CONTINUOUS
	GROUND SURFACE
	COMPACTED GRANULAR FILL
	CONTROL JOINT
	EXPANSION JOINT
	GRATING SPAN
	GROUT
	DIRECTION SHOWN
	GUARDRAILS & HANDRAILS
WALL F EXT	FIRE EXTINGUISHER
	CHECKERED PLATE
110.50 110.50	SPOT ELEVATION
	WALL TYPE
W27x84 (24'-0")	STD. AISC ROLLED SHAPE OF W27x84 AT EL 24'-0"
W21x55 (1")	STD. AISC ROLLED SHAPE OF W21x55 WITH 1 IN. UPWARD CAMBER
W18x35 V=20K	STD. AISC ROLLED SHAPE OF W18x35 WITH 20 KIPS BEAM END SHEAR
W14x22-10	STD. AISC ROLLED SHAPE OF W14x22 WITH 10 HEADED SHEAR CONNECTORS EQUALLY SPACED

SYMBOL	LEGEND
W21x50-10/6/12 (BEAM / BEAM)	STD. AISC ROLLED SHAPE OF W21X50 WITH 28 HEADED SHEAR CONNECTORS EQUALLY SPACED FROM L TO R AS 10 CONNECTORS 6 CONNECTORS/12 CONNECTORS
VB1	VERTICAL BRACE MARK
VCB1	VERTICAL CROSS BRACE MARK
VKB1	VERTICAL "K" BRACE MARK
45°00'00"	ANGLE IN DEGREES, MINUTES AND SECONDS
6"	SLAB DEPRESSION AND AMOUNT
1050'-0"	DATUM ELEVATION

		L	STEEL ANGLE
		⌊⌋	STEEL ANGLES BACK TO BACK
		I	STD. AISC ROLLED W SHAPE
		C	STD. AISC ROLLED CHANNEL
		O	STD. AISC STEEL PIPE
		□	STD. AISC STR TUBING
		@	AT
		&	AND
		X	BY
		℄	CENTER LINE
		Ø	DIAMETER
		%	PERCENT
		PL	PLATE
		#	NUMBER (BAR SIZE)
		ϕ	SQUARE

No.	Date	Revisions	App.

STATE OF TEXAS — LI CHUNG CHEN — 98576 — REGISTERED PROFESSIONAL ENGINEER
9-21-2011

Binkley & Barfield, Inc
consulting engineers
Texas Registration Number F-257
1710 Seamist Drive
Houston, Texas 77008-3189
(713) 869-3433

SURVEYED BY: AMANI ENG. | FIELD BOOK NO. : P-5486

CITY OF HOUSTON
DEPARTMENT OF PUBLIC WORKS AND ENGINEERING

ALMEDA SIMS WWTP & SPF IMPROVEMENTS PACKAGE II

GENERAL CIVIL AND STRUCTURE LEGENDS

FILE NO:	–
WBS: R-000298-0005-4	
DRAWING SCALE	NO SCALE
CITY OF HOUSTON PM	IRAJ RANJBAR, P.E.
DWG NO. :	G-005
SHEET NO.	5 OF 147

PUBLIC WORKS AND ENGINEERING — ACCEPTED & FILED — 49061-5-0 CITY DRAWING NUMBER — HOUSTON, TEXAS

COLOR TABLE: ENVIRO.RD.ctb
CA 115805 Almeda Sims Package II\Cadd Dwgs_G-5 General Civil and Structure Legends.dwg Sep 20,2011 - 11:09am RJ
ORIGINAL SCALE IN INCHES FOR REDUCED PLANS
0 1 2 3

BAR SCREENS
NUMBER: 2
TYPE: MECHANICAL
CHANNEL WIDTH: 4'-0"
SPAICING: 3/4"

INFLUENT DISTRIBUTION CHANNEL
NUMBER: 1
SIZE: 186'-8"x30'-0"x14'-6"SWD
TOTAL VOLUME: 81,127 CU FT (0.61 MG)

AERATION BASIN
NUMBER: 6
SIZE: 420'-10" X 30'-0" X 1'-6" SWD
VOLUME/BASIN: 183,062 CU FT (1.37 MG)
TOTAL VOLUME: 1'098,372 CU FT (8.22 MG)

MLSS CHANNEL
NUMBER:
SIZE: 474'-8"x12'-0"x14'-6" SWD
VOLUME/BASIN: 82,592 CU FT (0.62 MG)

FINAL CLARIFIERS
NUMBER: 5
SIZE: 130'-0" X 10'-8" SWD
SURFACE AREA/CLARIFIER: 13,273 SQ FT
TOTAL SURFACE AREA: 66,365 SQ FT

CHLORINE CONTACT BASINS
MIXING: 7,964 CU FT (0.06 MG)
CCB NO. A: 166'-9"X12'-6"X14'-3 3/4"SWD 29,827.4 CU FT (0.223 MG)
CCB NO. B: 153'-1"X30'-0"X14'-3 3/4" SWD 65,715 CU FT (0.424 MG)
CCB NO. C: 166'-9"X30'-0"X14'-3 3/4" SWD 71,585 CU FT (0.535 MG)
WEIR BASIN: 75'-10 1/4"X30'-0"X14'-3 3/4" 32,564 CU FT (0.244 MG)
TOTAL VOLUME:199,691.4 CU FT (1.426MG)

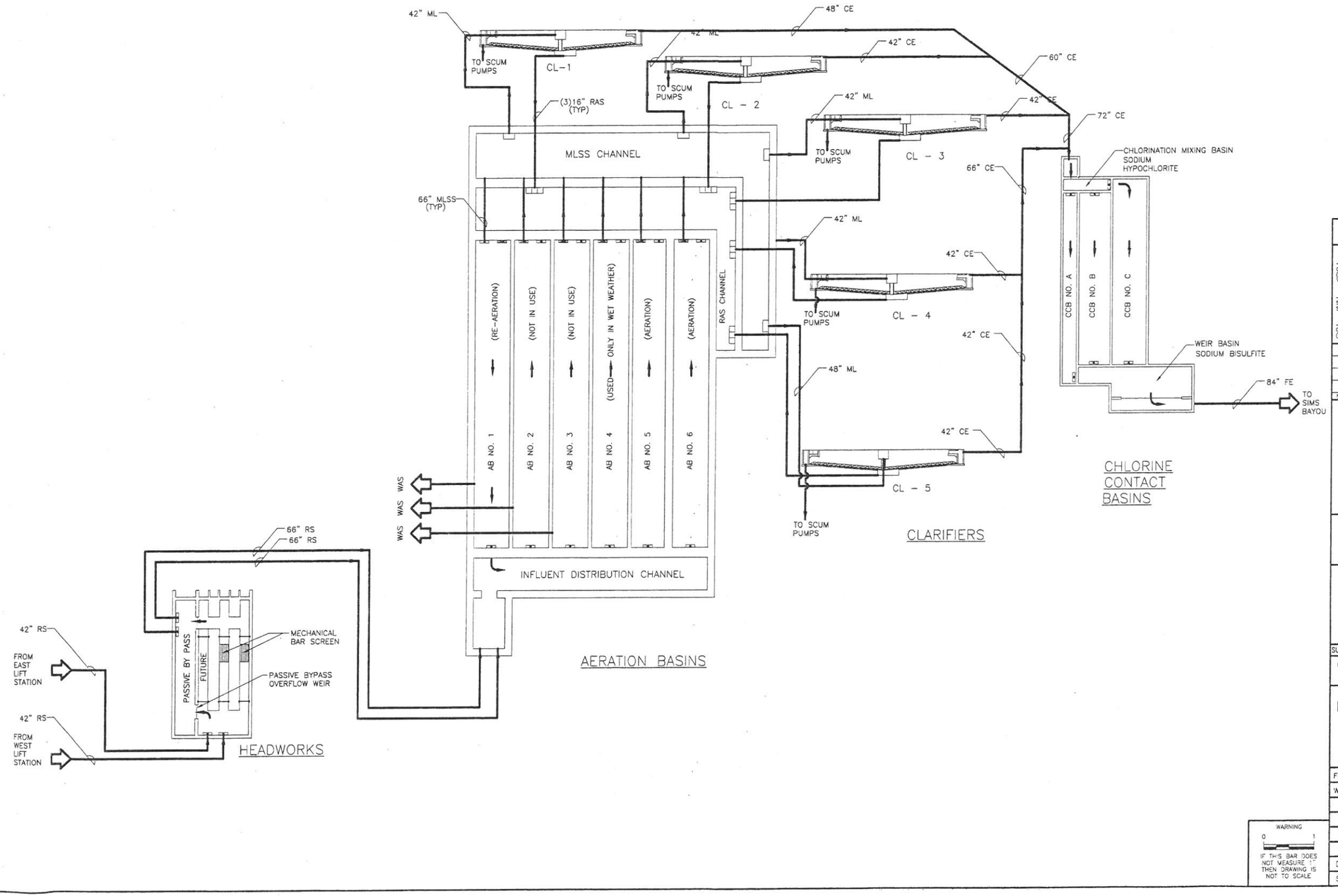

TO ARRANGE FOR LINES TO BE TURNED OFF OR MOVED, CALL CENTERPOINT AT 713-207-7777.

PRIVATE UTILITY LINES SHOWN
AT LEAST 48 HOURS BEFORE EXCAVATING IN STREET R.O.W. OR EASEMENTS CALL THE LONE STAR NOTIFICATION 713-223-4567.

Date:

CenterPoint Energy/Electric Facilities
(Approved only for crossing underground ductlines, unless otherwise noted.)
Valid at time of review only.

Date:

SBC Approved for underground conduit facilities only.
Signature valid for one year.

Date:

CenterPoint Energy/Gas Facilities
(Gas service lines are not shown)

No.	Date	Revisions	App.

STATE OF TEXAS
RAMESH KALLURI
68078
REGISTERED PROFESSIONAL ENGINEER
Ramesh Kalluri
9/19/2011

KGI Kalluri Group, Inc.
Consulting Engineers & Project Managers
TBPE Registration No. F-665
10497 Town & Country Way, Suite 220
Houston, Texas 77024
Phone: (713)-365-9288

Binkley & Barfield, Inc
consulting engineers
Texas Registration Number F-257
1710 Seamist Drive
Houston, Texas 77008-3189
(713) 869-3433

SURVEYED BY: AMANI ENG. | FIELD BOOK NO. : P-5486

CITY OF HOUSTON
DEPARTMENT OF PUBLIC WORKS AND ENGINEERING

ALMEDA SIMS WWTP & SPF IMPROVEMENTS PACKAGE II

PROCESS FLOW DIAGRAM

FILE NO: -
WBS: R-000298-0005-4
DRAWING SCALE
N.T.S.
CITY OF HOUSTON PM
IRAJ RANJBAR, P.E.
DWG NO. : G-006
SHEET NO. 6 OF 147

PUBLIC WORKS AND ENGINEERING
ACCEPTED & FILED
49061-7
CITY DRAWING NUMBER
HOUSTON, TEXAS

WARNING
0 1
IF THIS BAR DOES NOT MEASURE 1" THEN DRAWING IS NOT TO SCALE

G:\11580-Almeda-Sims-SPF\Package II\Cadd Dwgs_G-7 Process Flow Diagram -- Sludge Process Flow.dwg Sep 20,2011 - 11:25am RPD

LEGEND
EXISTING
PROPOSED
FE FLOW METER

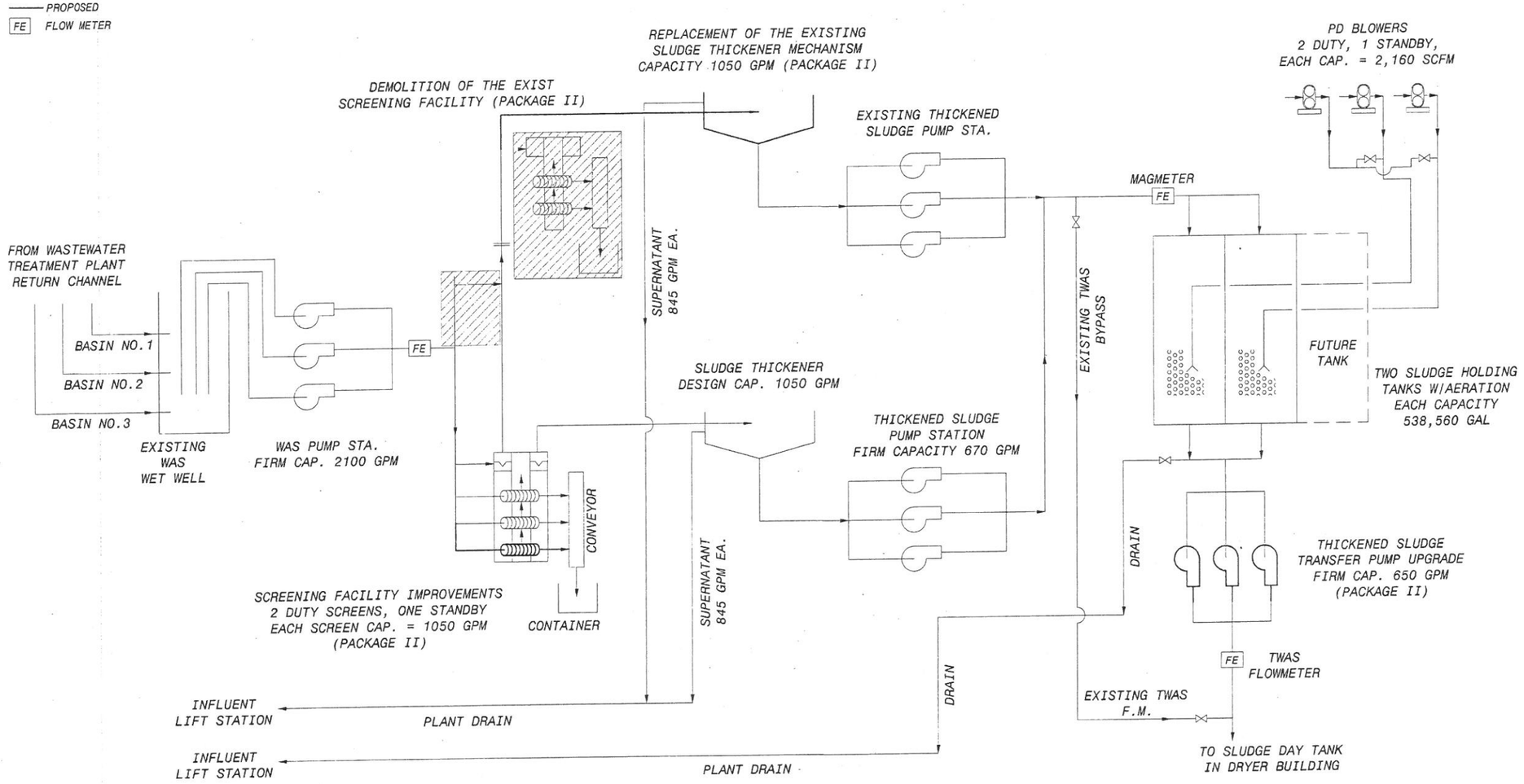

Parameter	% CAPTURED SOLIDS		ALMEDA SIMS SPF SLUDGE PROCESS DESIGN FLOW (2025 PEAK MONTH)				
			7 Day/Week - 24 Hours/Day Wet Sludge Process				5 Day/Wk Operation
				WAS	Sludge Thickener	Thickened Sludge Storage Tank	
Stream	In process		Units	WAS Pump Sta.	Supernatant	Thickened Sludge	To Holding Tank	To Sludge Drying
Solids Qty.		100%	dry tons/day	55.55	0	55.55	55.55	77.77
		100%	dry lbs/day	111,100	0	111,100	111,100	155,540
		100%	% Solids	0.45%	0.0	2.50%	2.50%	2.50%
			wet lbs/day	24,688,900	0	4,444,000	4,444,000	6,221,600
Sludge Flow			gpm	2060	1,690	370	370	520

Note: wet sludge lbs/day = (dry solid lbs/day) / % Solids Supernatant, gpm = WAS - Thicked Sludge
Sludge Flow, gpm = (wet sludge lbs/day) / (8.34 * 1440)

No.	Date	Revisions	App.

STATE OF TEXAS
LI CHUNG CHEN
98575
REGISTERED PROFESSIONAL ENGINEER
1-9-2012

Binkley & Barfield, Inc
consulting engineers
Texas Registration Number F-257
1710 Seamist Drive
Houston, Texas 77008-3189
(713) 869-3433

SURVEYED BY: AMANI ENG. | FIELD BOOK NO. : P-5486

CITY OF HOUSTON
DEPARTMENT OF PUBLIC WORKS AND ENGINEERING

ALMEDA SIMS WWTP & SPF IMPROVEMENTS PACKAGE II

PROCESS FLOW DIAGRAM
WASTE ACTIVATED SLUDGE

FILE NO:	–
WBS: R-000298-0005-4	
DRAWING SCALE	NO SCALE
CITY OF HOUSTON PM	IRAJ RANJBAR, P.E.
DWG NO. :	G-007
SHEET NO.	7 OF 147

PUBLIC WORKS AND ENGINEERING ACCEPTED & FILED
49061-4
CITY DRAWING NUMBER
HOUSTON, TEXAS

COLOR TABLE
ORIGINAL SCALE IN INCHES FOR REDUCED PLANS
0 1 2 3

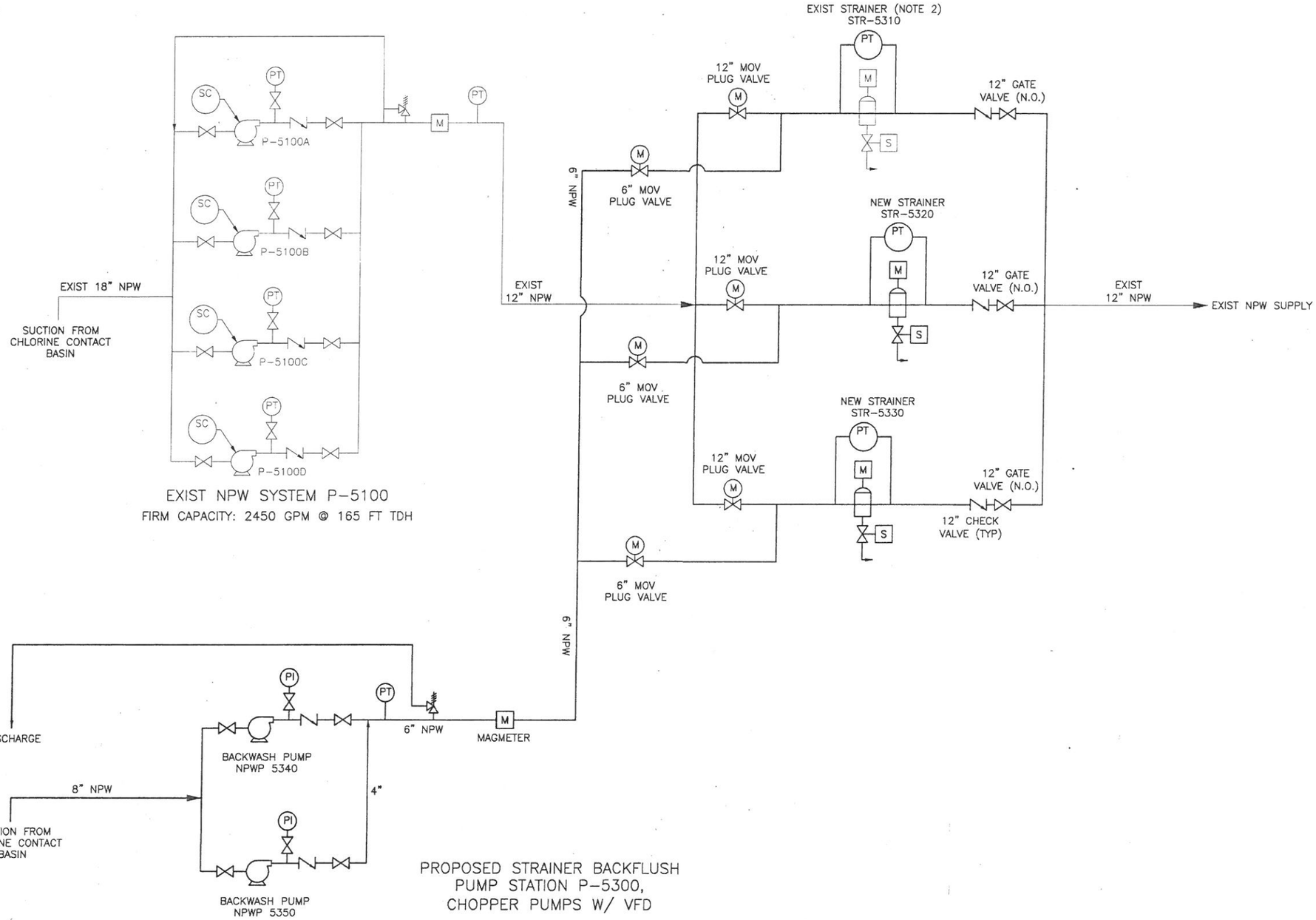

NOTES:

1. SEE DRAWING I-101 FOR CONNECTION TO EXISTING SCADA NETWORK.
2. REFURBISH EXISTING STRAINER STR-5310 WITH NEW STRAINER ELEMENT, BRUSH AND DP TRANSMITTER.
   PROVIDE NEW CONTROL WIRING AND CONDUIT. RECONNECT STRAINER CONTROL TO THE NEW STRAINER CONTROL PANNEL.
3. REFER TO COMPLETE PLANS AND SPEC FOR DETAILS OF PROPOSED WORKS.

No.	Date	Revisions	App.

STATE OF TEXAS
LI CHUNG CHEN
98576
REGISTERED
PROFESSIONAL ENGINEER
9-21-2011

Binkley & Barfield, Inc
consulting engineers
Texas Registration Number F-257
1710 Seamist Drive
Houston, Texas 77008-3189
(713) 869-3433

SURVEYED BY: AMANI ENG. | FIELD BOOK NO. : P-5486

CITY OF HOUSTON
DEPARTMENT OF PUBLIC WORKS AND ENGINEERING

ALMEDA SIMS WWTP & SPF IMPROVEMENTS PACKAGE II

EXISTING NON-POTABLE WATER (NPW) MODIFIED FLOW DIAGRAM

FILE NO:	-
WBS: R-000298-0005-4	
DRAWING SCALE	NO SCALE
CITY OF HOUSTON PM	IRAJ RANJBAR, P.E.
DWG NO. :	G-008
SHEET NO.	8 OF 147

PUBLIC WORKS AND ENGINEERING
ACCEPTED & FILED
CITY DRAWING NUMBER
HOUSTON, TEXAS

G:\115805 Almeda Sims Package II\Cadd Dwgs_G_8 NPW System Modifications(rev).dwg Sep 20,2011 - 12:41pm RPD
COLOR TABLE:
ORIGINAL SCALE IN INCHES
FOR REDUCED PLANS
0 1 2 3

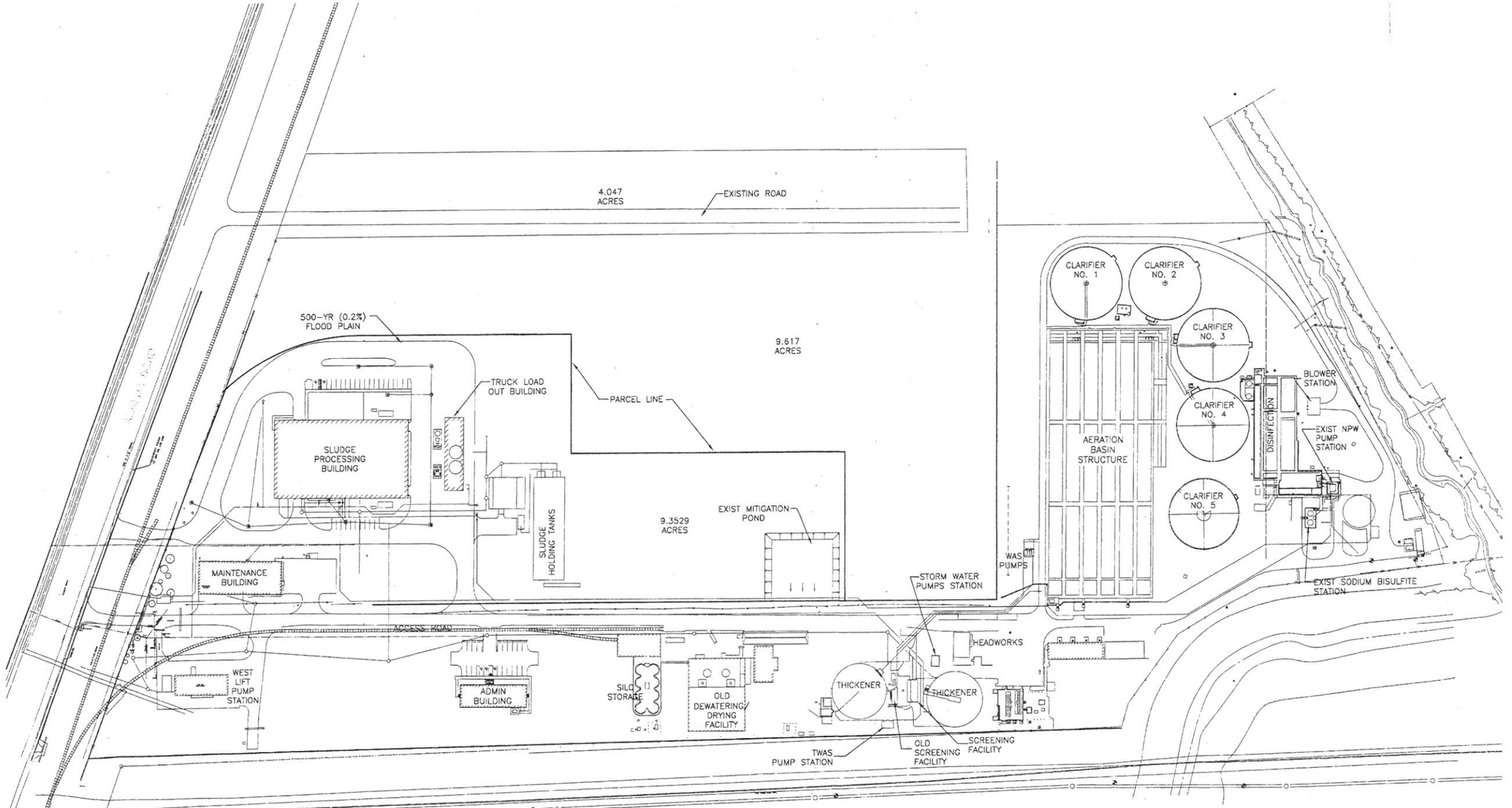

No.	Date	Revisions	Acp.

STATE OF TEXAS
LI CHUNG CHEN
98576
REGISTERED
PROFESSIONAL ENGINEER
1-9-2012

Binkley & Barfield, Inc
consulting engineers
Texas Registration Number F-257
1710 Seamist Drive
Houston, Texas 77008-3189
(713) 868-3433

SURVEYED BY: AMANI ENG. | FIELD BOOK NO. : P-5486

CITY OF HOUSTON
DEPARTMENT OF PUBLIC WORKS AND ENGINEERING

ALMEDA SIMS WWTP & SPF IMPROVEMENTS PACKAGE II

EXISTING SITE PLAN - OVERALL

FILE NO:	-
WBS:	R-000298-0005-4
DRAWING SCALE	1"=100'
CITY OF HOUSTON PM	IRAJ RANJBAR, P.E.
DWG NO. :	C-100
SHEET NO.	9 OF 147

PUBLIC WORKS AND ENGINEERING
ACCEPTED & FILED
49061
CITY DRAWING NUMBER
HOUSTON, TEXAS

G:\115805 Almeda Sims Package II\Cadd Dwgs_C-100 Existing Site Plan.dwg Jan 10,2012 - 11:18am rpd

COLOR TABLE:

ORIGINAL SCALE IN INCHES
FOR REDUCED PLANS
0 1 2 3

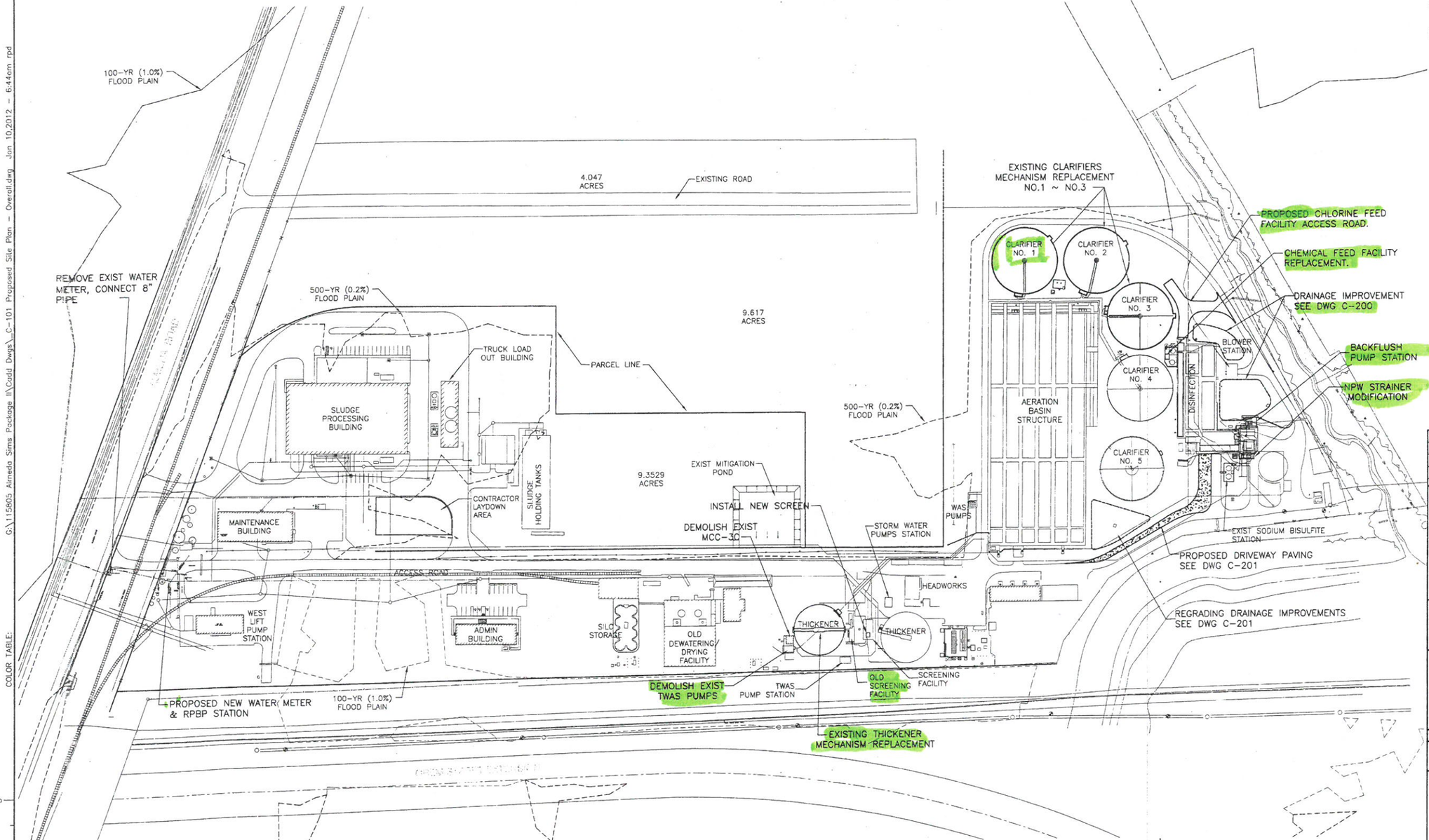

NOTES:

1. SEE DRAWINGS C-200 SERIES FOR NEW ACCESS ROAD, PAVING AND DRAINAGE IMPROVEMENTS.
2. SEE DRAWINGS C-300 SERIES FOR EXISTING WATER METER REPLACEMENT AND RELOCATION.
3. SEE DRAWINGS M-100 SERIES FOR PROPOSED WORK ON EXISTING THICKENER REPLACEMENT.
4. SEE DRAWINGS M-200 SERIES FOR PROPOSED WORK ON EXISTING CLARIFIERS REHAB/REPLACEMENT.
5. SEE DRAWINGS M-300 SERIES FOR PROPOSED WORK ON EXISTING NPW STRAINER MODIFICATION AND BACKWASH PUMP STATION.

SITE VERTICAL CONTROL:
ELEVATIONS ARE BASED ON A LINE LEVEL LOOP FROM TROPICAL STORM ALLISON RECOVERY PROJECT REFERENCE. MARKER 030085, WITH A PUBLISHED ELEVATION OF 44.50' (NAVD 88, 2001 ADJUSTMENT). ALUMINUM ROD STAMPED 030085 LOCATED AT ALMEDA ROAD AND MOWERY RD.

HORIZONTAL CONTROL:
HORIZONTAL CONTROL IS BASED ON RTK GPS OBSERVATIONS HOLDING TSARP MONUMENTS 030430, 030095, 030090, AND 030085. ALL COORDINATES ARE RELATED TO TEXAS STATE CENTRAL ZONE. COORDINATES ARE SURFACE USING A SURFACE ADJUSTMENT FACTOR OF 1.00012183.

No.	Date	Revisions	App.

STATE OF TEXAS
LI CHUNG CHEN
98576
REGISTERED PROFESSIONAL ENGINEER
1-9-2012

Binkley & Barfield, Inc
consulting engineers
Texas Registration Number F-257
1710 Seamist Drive
Houston, Texas 77008-3186
(713) 869-3433

SURVEYED BY: AMANI ENG. | FIELD BOOK NO. : P-5486

CITY OF HOUSTON
DEPARTMENT OF PUBLIC WORKS AND ENGINEERING

ALMEDA SIMS WWTP & SPF IMPROVEMENTS PACKAGE II

PROPOSED SITE PLAN - OVERALL

FILE NO:	-
WBS: R-000298-0005-4	
DRAWING SCALE	1"=100'
CITY OF HOUSTON PM	IRAJ RANJBAR, P.E.
DWG NO. :	C-101
SHEET NO. 10 OF 147	

PUBLIC WORKS AND ENGINEERING
ACCEPTED & FILED
49061
CITY DRAWING NUMBER
HOUSTON, TEXAS

G:\115805 Almeda Sims Package II\Cadd Dwgs_C-101 Proposed Site Plan — Overall.dwg Jan 10,2012 — 6:44am rpd

COLOR TABLE:

ORIGINAL SCALE IN INCHES FOR REDUCED PLANS
0 1 2 3

C:\115805 Almeda Sims Package II\Cadd Dwgs\C-102 Proposed Site Plan - East Half Only.dwg Jan 10,2012 - 6:45am rpd

COLOR TABLE:

ORIGINAL SCALE IN INCHES FOR REDUCED PLANS
0 1 2 3

SITE VERTICAL CONTROL:
ELEVATIONS ARE BASED ON A LINE LEVEL LOOP FROM TROPICAL STORM ALLISON RECOVERY PROJECT REFERENCE. MARKER 030085, WITH A PUBLISHED ELEVATION OF 44.50' (NAVD 88, 2001 ADJUSTMENT). ALUMINUM ROD STAMPED 030085 LOCATED AT ALMEDA ROAD AND MOWERY RD.

HORIZONTAL CONTROL:
HORIZONTAL CONTROL IS BASED ON RTK GPS OBSERVATIONS HOLDING TSARP MONUMENTS 030430, 030095, 030090, AND 030085. ALL COORDINATES ARE RELATED TO TEXAS STATE CENTRAL ZONE. COORDINATES ARE SURFACE USING A SURFACE ADJUSTMENT FACTOR OF 1.00012183.

NOTES:
1. MODIFY EXISTING NPW STRAINERS WITH PROPOSED BACKFLUSH PUMP STATION. SEE DWG M-300 SERIES

EXISTING ROAD
EXISTING CLARIFIERS MECHANISM REPLACEMENT NO.1 ~ NO.3 SEE DWG M-200 SERIES
CLARIFIER NO. 1
CLARIFIER NO. 2
CLARIFIER NO. 3
CLARIFIER NO. 4
CLARIFIER NO. 5
AERATION BASIN STRUCTURE
DISINFECTION
BLOWER STATION
PROPOSED CHEMICAL FEED FACILITY ACCESS ROAD IMPROVEMENTS
CHEMICAL FEED FACILITY REPLACEMENT
REGRADING DRAINAGE IMPROVEMENT SLOPE TO EXIST INVERT ELEVATION
30" OAK TREE
HCFCD C-137 DRAINAGE CHANNEL C-137-00
PROPOSED STRAINER BACKWASH PUMPS
EXIST NPW PUMP STATION
NPW STRAINER MODIFICATION SEE NOTES
SODIUM BISULFITE STATION
EXISTING FENCE
EXIST NON-POTABLE WATER LINE
SAN MH
RIM EL=45.73
24"CI(NW)EL=32.24
24"CI(SE)FL=31.21
FND ALUM DISC
X = 3110611.49
Y = 13795538.92
PROPOSED DRIVEWAY PAVING IMPROVEMENTS SEE DWG C-201
REGRADING DRAINAGE IMPROVEMENTS SLOPE TO EXIST INVERT ELEVATION SEE DWG C-201
SIMS BAYOU
500-YR (0.2%) FLOOD PLAIN
PARCEL LINE
TWAS PUMPS
NON-POTABLE WATER
18" PLANT DRAIN
INSTALL NEW SCREEN
STORM WATER PUMPS STATION
HEADWORKS
BLOWER BUILDING
SWITCHGEAR BUILDING
DEMOLISH EXIST MCC-3C
EXIST THICKENER
EXIST THICKENER
THICKENED SLUDGE PUMP STATION
EXISTING THICKENER MECHANISM REPLACEMENT
DEMOLITION EXIST OLD SCREENING FACILITY
NEW MCC-3C
DEMOLISH EXIST TWAS PUMPS

TO ARRANGE FOR LINES TO BE TURNED OFF OR MOVED, CALL CENTERPOINT AT 713-207-7777.

PRIVATE UTILITY LINES SHOWN
AT LEAST 48 HOURS BEFORE EXCAVATING IN STREET R.O.W. OR EASEMENTS CALL THE LONE STAR NOTIFICATION 713-223-4567.

Date:
CenterPoint Energy/Electric Facilities
(Approval only for crossing underground ductlines, unless otherwise noted.)
Valid at time of review only.

Date:
SBC Approval for underground conduit facilites only.
Signature valid for one year.

Date:
CenterPoint Energy/Gas Facilities
(Gas service lines are not shown)

No.	Date	Revisions	App.

STATE OF TEXAS
LI CHUNG CHEN
98576
REGISTERED PROFESSIONAL ENGINEER
1-9-2012

Binkley & Barfield, Inc
consulting engineers
Texas Registration Number F-257
1110 Seamist Drive
Houston, Texas 77008-3189
(713) 869-3433

SURVEYED BY: AMANI ENG. | FIELD BOOK NO. : P-5486

CITY OF HOUSTON
DEPARTMENT OF PUBLIC WORKS AND ENGINEERING

ALMEDA SIMS WWTP & SPF IMPROVEMENTS PACKAGE II

PROPOSED SITE PLAN - EAST HALF ONLY

FILE NO:	-
WBS: R-000298-0005-4	
DRAWING SCALE	
1"=50'	
CITY OF HOUSTON PM	
IRAJ RANJBAR, P.E.	
DWG NO. :	C-102
SHEET NO.	11 OF 147

PUBLIC WORKS AND ENGINEERING ACCEPTED & FILED
490614
CITY DRAWING NUMBER
HOUSTON, TEXAS

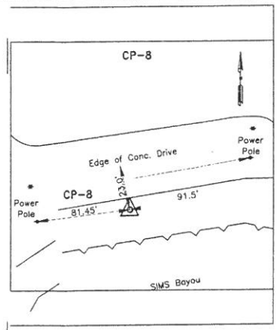

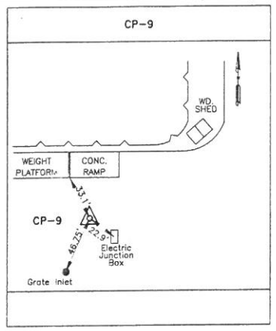

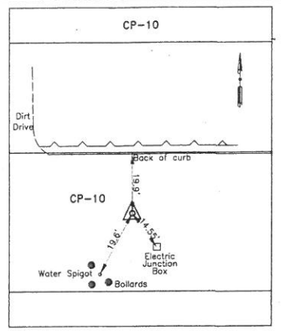

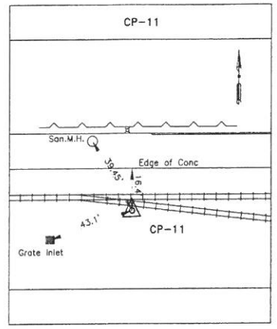

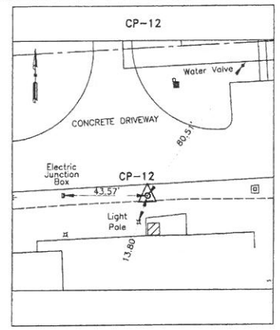

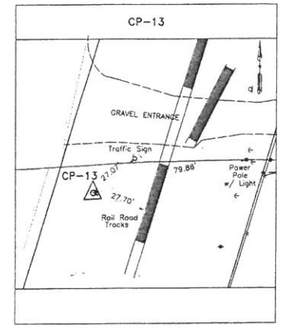

ALMEDA SIMS WASTEWATER PLANT

TBM/CONTROL POINTS

CP #	NORTHING	EASTING	ELEVATION	DESCRIPTION
1	13795527.25	3110732.24	44.83	5/8" Iron Rod
2	13795733.17	3110597.17	45.13	5/8" Iron Rod
3	13795923.62	3110462.14	45.00	5/8" Iron Rod
4	13796126.01	3110324.13	45.59	5/8" Iron Rod
5	13796362.53	3110155.15	45.86	5/8" Iron Rod
7	13795874.61	3110252.77	50.58	5/8" Iron Rod
12	13795482.44	3108522.93	49.18	5/8" Iron Rod
13	13795458.54	3108181.97	50.34	5/8" Iron Rod

ADDITIONAL CONTROL POINTS

CP #	NORTHING	EASTING	ELEVATION	DESCRIPTION
8	13795447.50	3110189.01	48.15	5/8" Iron Rod
9	13795385.14	3109798.51	49.79	Mag Nail
10	13795381.30	3109432.56	49.99	Mag Nail
11	13795346.30	3108980.90	50.12	5/8" Iron Rod

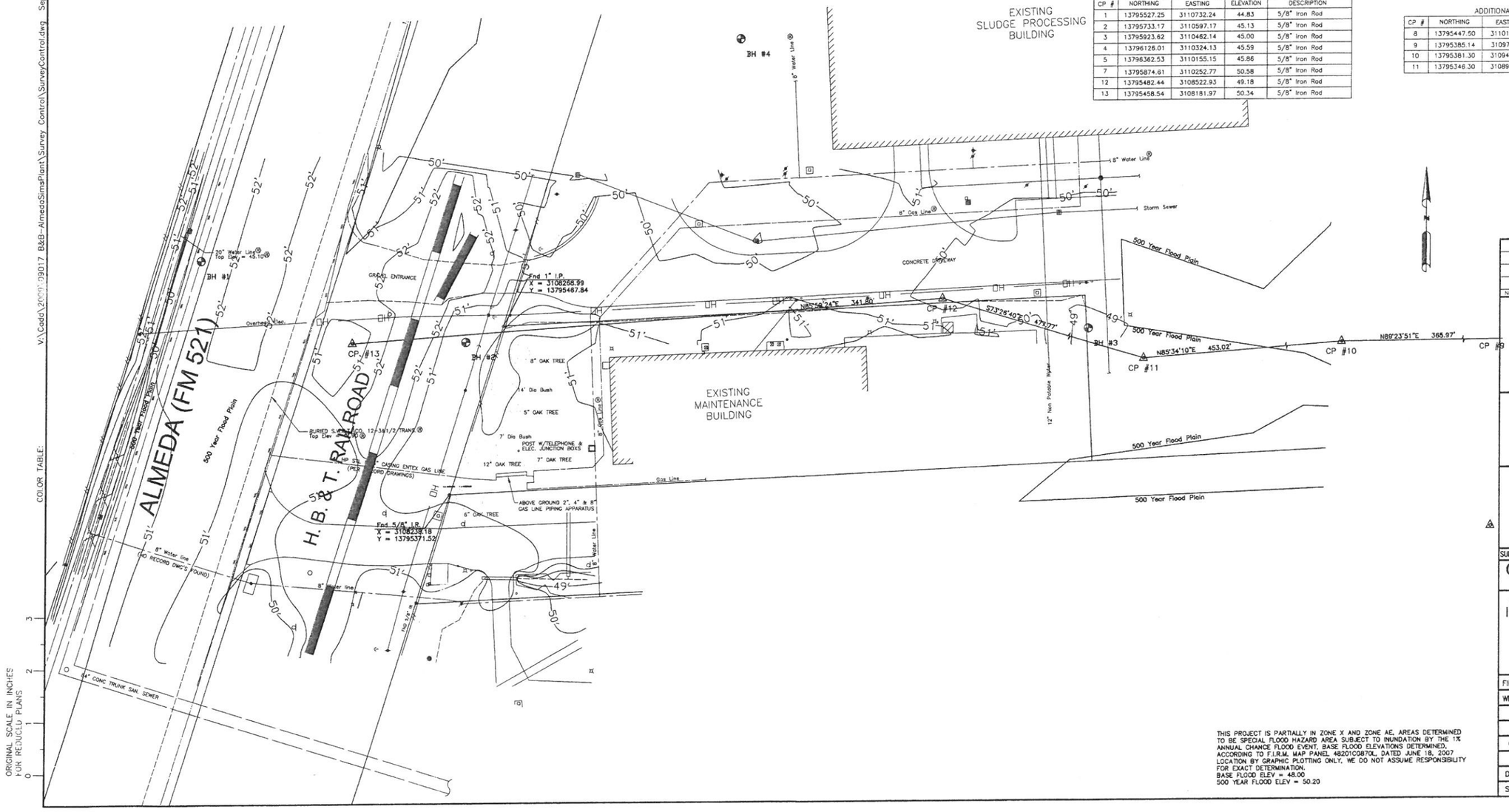

THIS PROJECT IS PARTIALLY IN ZONE X AND ZONE AE, AREAS DETERMINED TO BE SPECIAL FLOOD HAZARD AREA SUBJECT TO INUNDATION BY THE 1% ANNUAL CHANCE FLOOD EVENT, BASE FLOOD ELEVATIONS DETERMINED, ACCORDING TO F.I.R.M. MAP PANEL 48201C0870L, DATED JUNE 18, 2007 LOCATION BY GRAPHIC PLOTTING ONLY, WE DO NOT ASSUME RESPONSIBILITY FOR EXACT DETERMINATION.
BASE FLOOD ELEV = 48.00
500 YEAR FLOOD ELEV = 50.20

No.	Date	Revisions	App.

STATE OF TEXAS — REGISTERED — BRIAN A. YELLOW — 81181 — PROFESSIONAL LAND SURVEYOR — 01/24/14

AMANI ENGINEERING, INC.
8313 SOUTHWEST FREEWAY
SUITE 350
HOUSTON, TEXAS 77074
TEL: (713) 270-5700
TBPE REG. NO.: F-4528

Binkley & Barfield, Inc
consulting engineers
Texas Registration Number F-257
1710 Seamist Drive
Houston, Texas 77008-3189
(713) 869-3433

SURVEYED BY: AMANI ENG. | FIELD BOOK NO. : P-5486

CITY OF HOUSTON
DEPARTMENT OF PUBLIC WORKS AND ENGINEERING

ALMEDA SIMS WWTP & SPF IMPROVEMENTS PACKAGE II

SURVEY CONTROL (SHEET 1 OF 2)

FILE NO:	–
WBS: R-000298-0005-4	
DRAWING SCALE	
1" = 30'	
CITY OF HOUSTON PM	
IRAJ RANJBAR, P.E.	1/16
DWG NO. : C-103	
SHEET NO. 12 OF 147	

PUBLIC WORKS AND ENGINEERING — ACCEPTED & FILED — 490631 — CITY DRAWING NUMBER — HOUSTON, TEXAS

ORIGINAL SCALE IN INCHES FOR REDUCED PLANS 0 1 2 3

COLOR TABLE:

V:\Cadd\2009\09017 B&B-AlmedaSimsPlant\Survey Control\SurveyControl.dwg Sep 20,2011 - 3:54pm colpaugh

BENCH MARK	NORTHING	EASTING	ELEVATION	DESCRIPTION
030085	13795017.702	3112448.55	44.50	Brass Disk

Floodplain Reference Mark Images Sheet

Page 1 of 1

HARRIS COUNTY FLOODPLAIN REFERENCE MARKS

Project Name:	Tropical Storm Allison Recovery Project	Floodplain BM No.:	030085
		Stream Number:	C100-0000

Station Sketch:

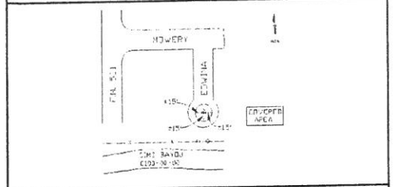

Photo 1-Station Detail:

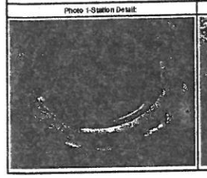

Photo 2-Station Area Picture:

Point Information Disclaimer: This data has been supplied by Harris County Flood Control District. No express or implied warranties are made by Harris County for the accuracy, completeness, reliability, usability, or suitability of the point data. Harris County assumes no responsibility for incorrect results or damages resulting from the use of the data.

http://hcedweb3.eng.hctx.net/Benchmark/DataSheets/DatasheetP2.aspx?ReferenceMar... 6/23/2009

TBM/CONTROL POINTS

CP #	NORTHING	EASTING	ELEVATION	DESCRIPTION
1	13795527.25	3110733.24	44.83	5/8" Iron Rod
2	13795733.17	3110987.17	45.13	5/8" Iron Rod
3	13795823.62	3110942.14	45.09	5/8" Iron Rod
4	13796124.81	3110324.13	45.58	5/8" Iron Rod
5	13796360.53	3110156.15	45.88	5/8" Iron Rod
7	13795674.81	3110552.77	50.58	5/8" Iron Rod
12	13795480.44	3109822.83	49.18	5/8" Iron Rod
13	13795438.34	3109191.97	50.34	5/8" Iron Rod

ADDITIONAL CONTROL POINTS

CP #	NORTHING	EASTING	ELEVATION	DESCRIPTION
8	13795447.80	3110188.01	48.13	5/8" Iron Rod
9	13795365.14	3109788.81	49.76	Mag Nail
10	13795381.30	3109438.56	49.99	Mag Nail
11	13795548.30	3108889.90	50.12	5/8" Iron Rod

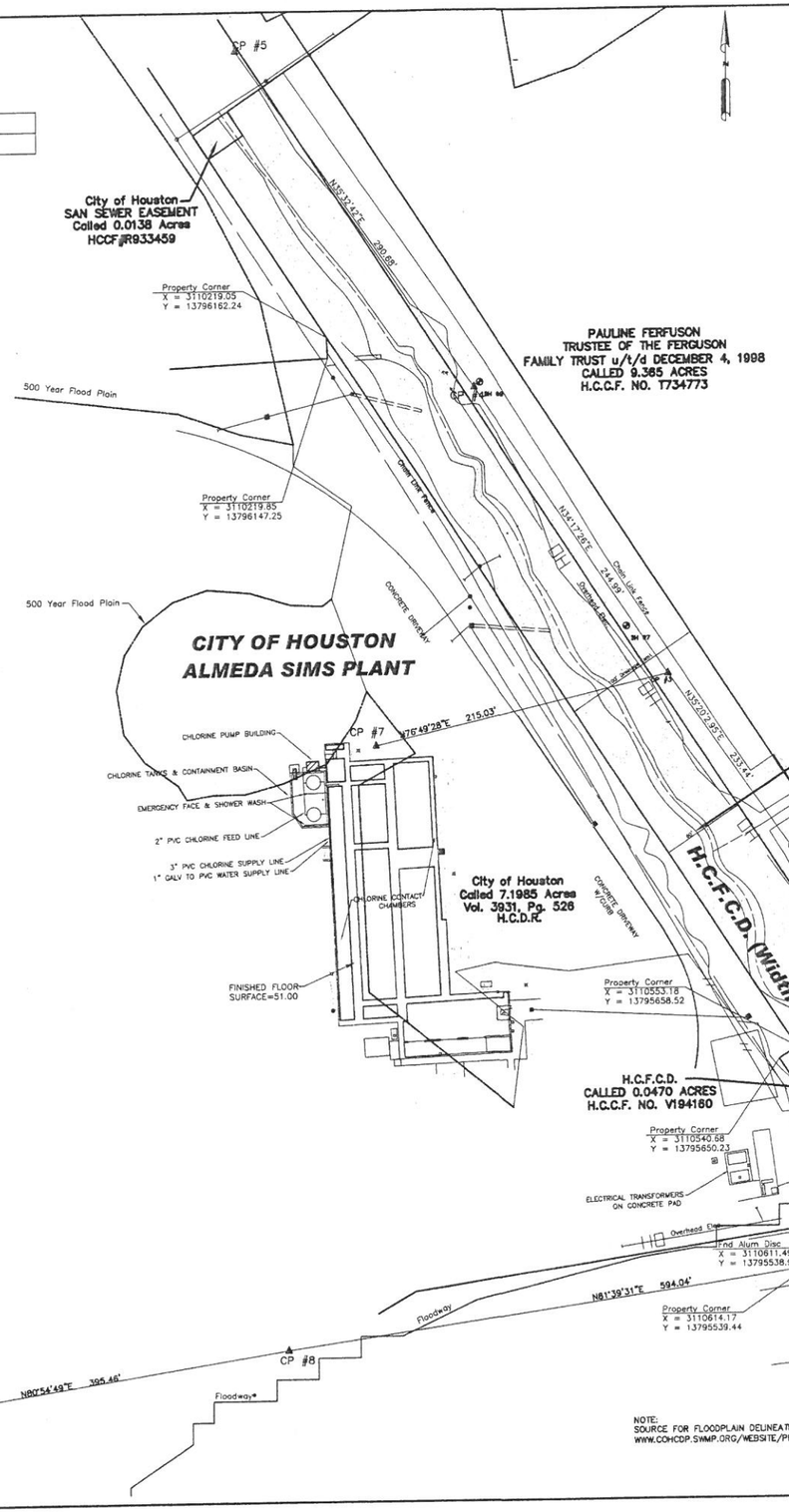

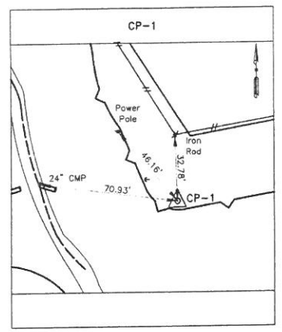

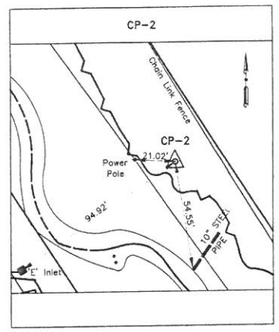

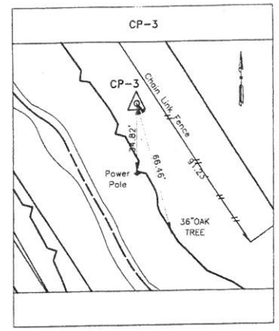

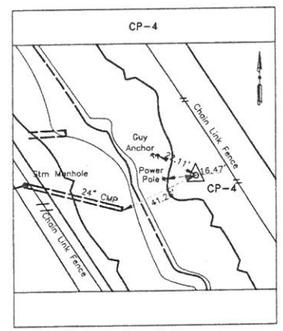

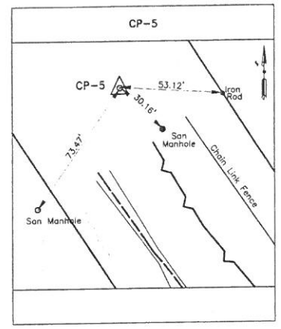

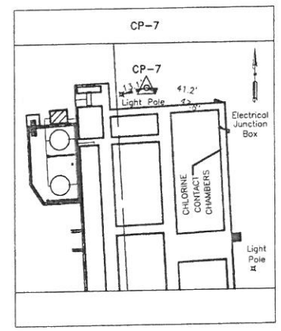

No.	Date	Revisons	App.

STATE OF TEXAS REGISTERED JOHNNIE A. WELLORE 6131 PROFESSIONAL LAND SURVEYOR
01/24/11

AMANI ENGINEERING, INC.
8313 SOUTHWEST FREEWAY
SUITE 350
HOUSTON, TEXAS 77074
TEL: (713) 270-5700
TBPE REG. NO.: F-4528

Binkley & Barfield, Inc
consulting engineers
Texas Registration Number F-257
1710 Seamist Drive
Houston, Texas 77008-3189
(713) 869-3433

SURVEYED BY: AMANI ENG. | FIELD BOOK NO. : P-5486

CITY OF HOUSTON
DEPARTMENT OF PUBLIC WORKS AND ENGINEERING

ALMEDA SIMS WWTP & SPF IMPROVEMENTS PACKAGE II

SURVEY CONTROL (SHEET 2 OF 2)

FILE NO:	-
WBS: R-000298-0005-4	
DRAWING SCALE	1" = 50'
CITY OF HOUSTON PM	IRAJ RANJBAR, P.E.
DWG NO. : C-104	
SHEET NO. 13 OF 147	

ACCEPTED & FILED
49061 map
CITY DRAWING NUMBER

NOTE:
SOURCE FOR FLOODPLAIN DELINEATION IS
WWW.COHCDP.SWMP.ORG/WEBSITE/PROVIEW/VIEWER.HTM

THIS PROJECT IS PARTIALLY IN ZONE X AND ZONE AE, AREAS DETERMINED TO BE SPECIAL FLOOD HAZARD AREA SUBJECT TO INUNDATION BY THE 1% ANNUAL CHANCE FLOOD EVENT. BASE FLOOD ELEVATIONS DETERMINED, ACCORDING TO F.I.R.M. MAP PANEL 48201C0870L, DATED JUNE 18, 2007 LOCATION BY GRAPHIC PLOTTING ONLY, WE DO NOT ASSUME RESPONSIBILITY FOR EXACT DETERMINATION.
BASE FLOOD ELEV = 48.00
500 YEAR FLOOD ELEV = 50.20

COLOR TABLE:

ORIGINAL SCALE IN INCHES
FOR REDUCED PLANS
0 1 2 3

V:\Cadd\2009\09017 B&B-AlmedaSimsPlant\Survey Control\SurveyControl2.dwg Sep 21,2011 - 8:14am colpough

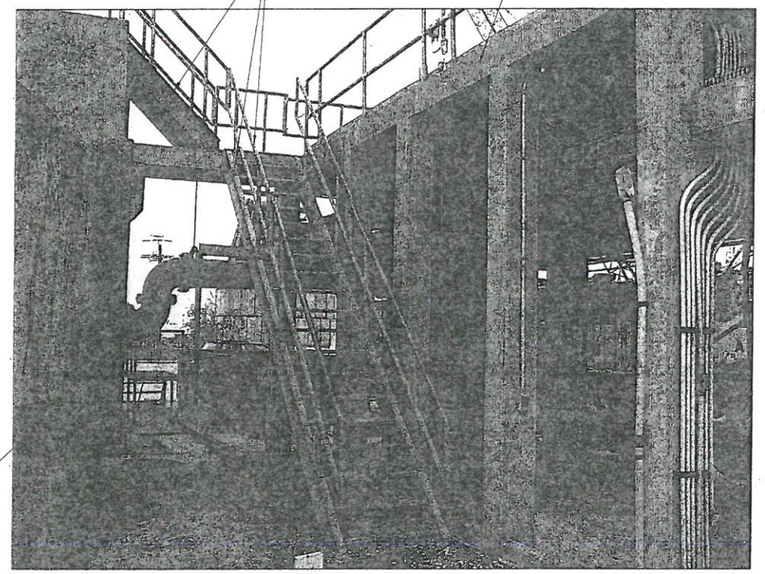

PHOTO 1-EXISTING SCREENING FACILITY
SCALE: N.T.S.

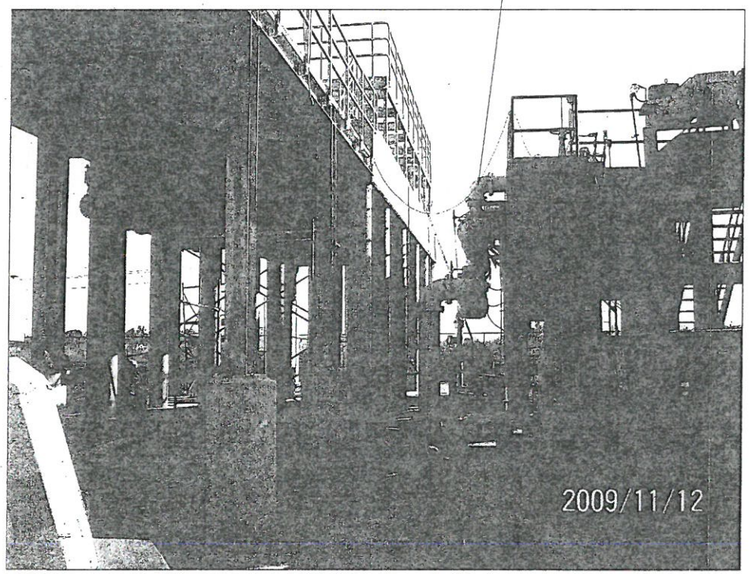

PHOTO 2-EXISTING SCREENING FACILITY
SCALE: N.T.S.

PHOTO 3-DEMOLITION LIMITS OF 14-INCH WAS LINE
SCALE: N.T.S.

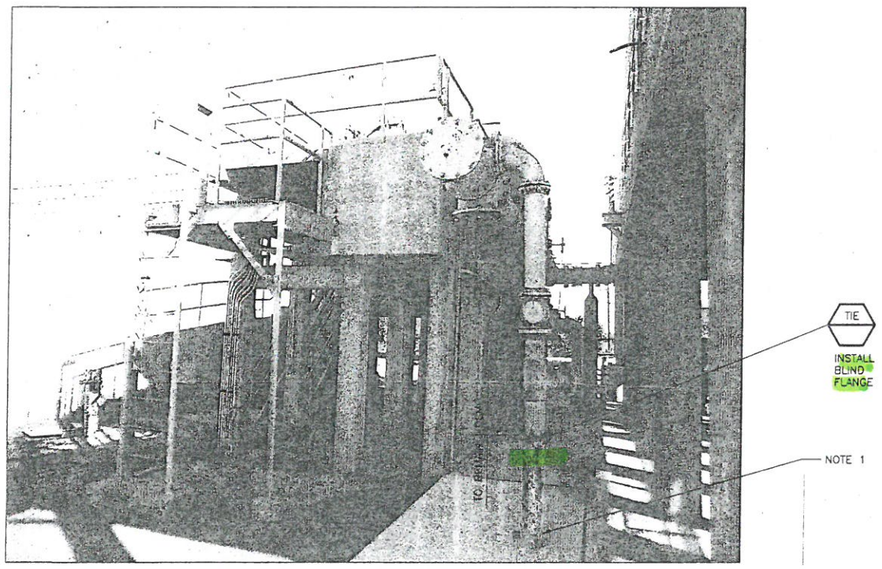

PHOTO 4-DEMOLITION LIMITS OF SCUM LINE
SCALE: N.T.S.

NOTES:

1. CLEAN AND PAINT EXISTING SCUM LINE AFTER INSTALLATION OF BLIND FLANGE.
2. PRIOR TO START OF CONSTRUCTION, CONTRACTOR SHALL FIELD VERIFY LOCATION OF ALL EXISTING UTILITIES IN THE PROPOSED CONSTRUCTION AREAS. NOTIFY OWNER IMMEDIATELY OF ANY DISCREPANCIES BETWEEN DRAWINGS AND THE EXISTING CONDITIONS.
3. SOME OF THE PIPING SHOWN ON THE DEMOLITION DRAWINGS MAY HAVE BEEN REMOVED AND/OR MODIFIED. PRIOR TO START OF CONSTRUCTION, CONTRACTOR SHALL COORDINATE WITH PLANT OPERATING STAFF AND ENGINEER TO IDENTIFY THE LIMITS OF DEMOLITION.

TO ARRANGE FOR LINES TO BE TURNED OFF OR MOVED, CALL CENTERPOINT AT 713-207-7777.

PRIVATE UTILITY LINES SHOWN
AT LEAST 48 HOURS BEFORE EXCAVATING IN STREET R.O.W. OR EASEMENTS CALL THE LONE STAR NOTIFICATION 713-223-4567.

Date:
CenterPoint Energy/Electric Facilities
(Approved only for crossing underground ductlines, unless otherwise noted.)
Valid at time of review only.

Date:
SBC Approved for underground conduit facilites only.
Signature valid for one year.

Date:
CenterPoint Energy/Gas Facilities
(Gas service lines are not shown)

No.	Date	Revisions	App

STATE OF TEXAS
RAMESH KALLURI
68078
REGISTERED PROFESSIONAL ENGINEER
Ramesh Kalluri 9/19/2011

KGI Kalluri Group, Inc.
Consulting Engineers & Project Managers
TBPE Registration No. F-665
10497 Town & Country Way, Suite 220
Houston, Texas 77024
Phone: (713)-365-9288

Binkley & Barfield, Inc
consulting engineers
Texas Registration Number F-257
1710 Seamist Drive
Houston, Texas 77008-3189
(713) 869-3433

SURVEYED BY: AMANI ENG. | FIELD BOOK NO. : P-5486

CITY OF HOUSTON
DEPARTMENT OF PUBLIC WORKS AND ENGINEERING

ALMEDA SIMS WWTP & SPF IMPROVEMENTS PACKAGE II

SCREENING FACILITY DEMOLITION SHEET 1 OF 4

FILE NO:	-
WBS: R-000298-0005-4	
DRAWING SCALE	
N.T.S.	
CITY OF HOUSTON PM	IRAJ RANJBAR, P.E.
DWG NO. :	C-105
SHEET NO.	14 OF 147

PUBLIC WORKS AND ENGINEERING
ACCEPTED & FILED
49061
CITY DRAWING NUMBER
HOUSTON, TEXAS

WARNING
0 1
IF THIS BAR DOES NOT MEASURE 1" THEN DRAWING IS NOT TO SCALE

DEMO EXISTING SCREENING FACILITY STRUCTURE

REMOVE EXISTING STAIRS AND CONSTRUCT NEW STAIRS

DO NOT USE ELEVATIONS SHOWN ON THIS DRAWING FIELD VERIFY ALL ELEVATIONS

REMOVE EXISTING STAIRS AND CONSTRUCT NEW STAIRS. NEW STAIRS TO BE FURNISHED BY THICKENER MECHANISM MANUFACTURER.

Note: Rotary Screen No. 1 not Shown. Equipment & Openings to be the same for both Rotostrainers

PLAN AT EL. 67.50
SCALE 3/8" = 1'-0"

SECTION
SCALE 1/2" = 1'-0"

DETAIL '1'
SCALE 1" = 1'-0"

DETAIL '2'
SCALE 1" = 1'-0"

DETAIL '3'
SCALE 1" = 1'-0"

DETAIL '4'
SCALE 1" = 1'-0"

DETAIL '5'
SCALE 1" = 1'-0"

DETAIL '6'
SCALE 1" = 1'-0"

TO ARRANGE FOR LINES TO BE TURNED OFF OR MOVED, CALL CENTERPOINT AT 713-207-7777.

PRIVATE UTILITY LINES SHOWN
AT LEAST 48 HOURS BEFORE EXCAVATING IN STREET R.O.W. OR EASEMENTS CALL THE LONE STAR NOTIFICATION 713-223-4567.

Date:
CenterPoint Energy/Electric Facilities
(Approved only for crossing underground ductlines, unless otherwise noted.)
Valid at time of review only.

Date:
SBC Approved for underground conduit facilities only.
Signature valid for one year.

Date:
CenterPoint Energy/Gas Facilities
(Gas service lines are not shown)

No.	Date	Revisions	App.

STATE OF TEXAS
RAMESH KALLURI
68078
REGISTERED PROFESSIONAL ENGINEER
9/19/201

KGI Kalluri Group, Inc.
Consulting Engineers & Project Managers
TBPE Registration No. F-665
10497 Town & Country Way, Suite 220
Houston, Texas 77024
Phone: (713)-365-9288

Binkley & Barfield, Inc
consulting engineers
Texas Registration Number F-257
1710 Seamist Drive
Houston, Texas 77008-3189
(713) 869-3433

SURVEYED BY: AMANI ENG. | FIELD BOOK NO. : P-5486

CITY OF HOUSTON
DEPARTMENT OF PUBLIC WORKS AND ENGINEERING

ALMEDA SIMS WWTP & SPF IMPROVEMENTS PACKAGE II

SCREENING FACILITY DEMOLITION
SHEET 2 OF 4

FILE NO:	-
WBS: R-000298-0005-4	
DRAWING SCALE	
N.T.S.	
CITY OF HOUSTON PM	
IRAJ RANJBAR, P.E.	
DWG NO. : C-106	
SHEET NO. 15 OF 147	

ACCEPTED & FILED
49061
CITY DRAWING NUMBER

WARNING
0 1
IF THIS BAR DOES NOT MEASURE 1" THEN DRAWING IS NOT TO SCALE

NOTES:

1. SEE NOTE 3, DWG. NO. M-101.

DEMO STRUCTURE
3'-0" BELOW GRADE
(NOTE 1)

DO NOT USE ELEVATIONS
SHOWN ON THIS DRAWING
FIELD VERIFY ALL ELEVATIONS

SECTION (D) Scale 1"=1'-0"

SECTION (A) C-106 Scale 1/2"=1'-0"

SECTION (B) C-106 Scale 1/2"=1'-0"

SECTION (C) C-105 Scale 1/2"=1'-0"

DETAIL '1' Scale 1"=1'-0"

DETAIL '2' Scale 3"=1'-0"

BEAM TYPES B1 & B2

BEAM TYPE B3

TYPICAL BEAM SECTIONS
Scale 1"=1'-0"

TO ARRANGE FOR LINES TO BE TURNED OFF OR MOVED, CALL CENTERPOINT AT 713-207-7777.

PRIVATE UTILITY LINES SHOWN
AT LEAST 48 HOURS BEFORE EXCAVATING IN STREET R.O.W. OR EASEMENTS CALL THE LONE STAR NOTIFICATION 713-223-4567.

Date:

CenterPoint Energy/Electric Facilities
(Approved only for crossing underground ductlines, unless otherwise noted.)
Valid at time of review only.

Date:

SBC Approved for underground conduit facilities only.
Signature valid for one year.

Date:

CenterPoint Energy/Gas Facilities
(Gas service lines are not shown)

No	Date	Revisions	App.

STATE OF TEXAS
RAVESH KALLURI
68078
REGISTERED PROFESSIONAL ENGINEER
9/19/2011

KGI Kalluri Group, Inc.
Consulting Engineers & Project Managers
TBPE Registration No. F-665
10497 Town & Country Way, Suite 220
Houston, Texas 77024
Phone: (713)-365-9288

Binkley & Barfield, Inc
consulting engineers
Texas Registration Number F-257
1710 Seamist Drive
Houston, Texas 77008-3189
(713) 869-3433

SURVEYED BY: AMANI ENG. FIELD BOOK NO. : P-5486

CITY OF HOUSTON
DEPARTMENT OF PUBLIC WORKS AND ENGINEERING

ALMEDA SIMS WWTP & SPF IMPROVEMENTS PACKAGE II

SCREENING FACILITY DEMOLITION SHEET 3 OF 4

FILE NO: -
WBS: R-000298-0005-4
DRAWING SCALE
N.T.S.
CITY OF HOUSTON PM
IRAJ RANJBAR, P.E.
DWG NO. : C-107
SHEET NO. 16 OF 147

PUBLIC WORKS AND ENGINEERING
ACCEPTED & FILED
49061
CITY DRAWING NUMBER
HOUSTON, TEXAS

WARNING
IF THIS BAR DOES NOT MEASURE 1" THEN DRAWING IS NOT TO SCALE

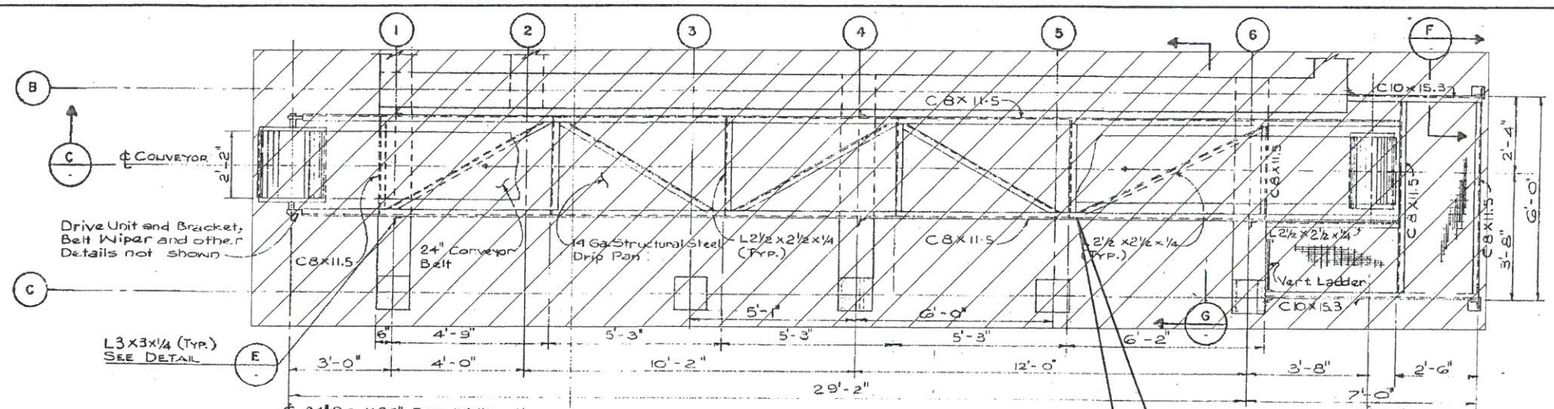

PLAN - CONVEYOR
SCALE: 1/2"=1'-0"

DEMO EXISTING CONVEYOR

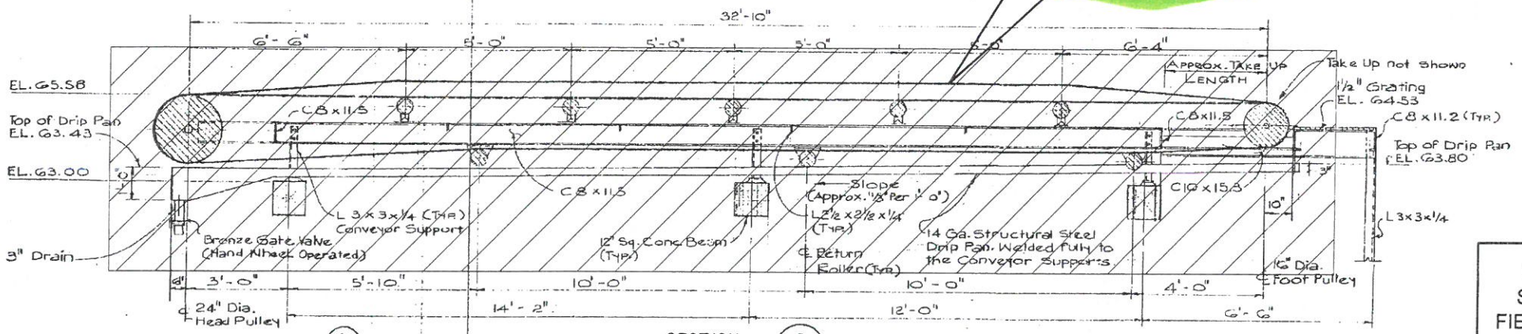

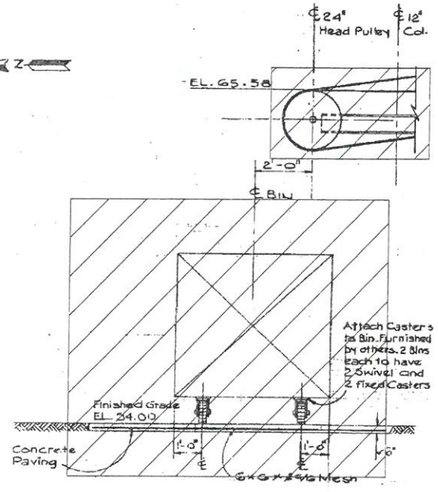

SCREENING COLLECTING BIN (B)
SCALE: 1/2"=1'-0"

SECTION (C)
SCALE: 1/2"=1'-0"

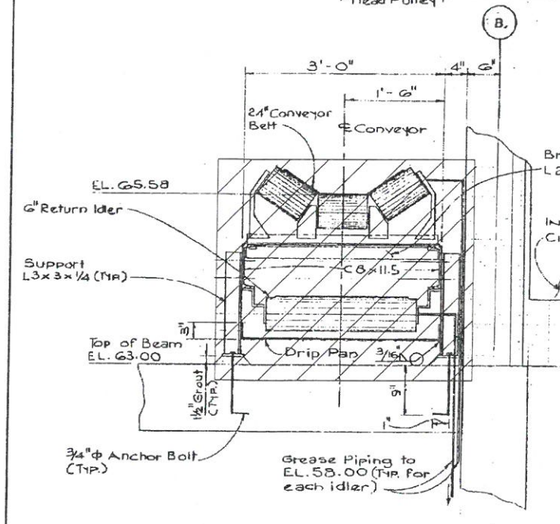

TYPICAL DETAIL OF CONVEYOR (D)
SCALE: 1"=1'-0"

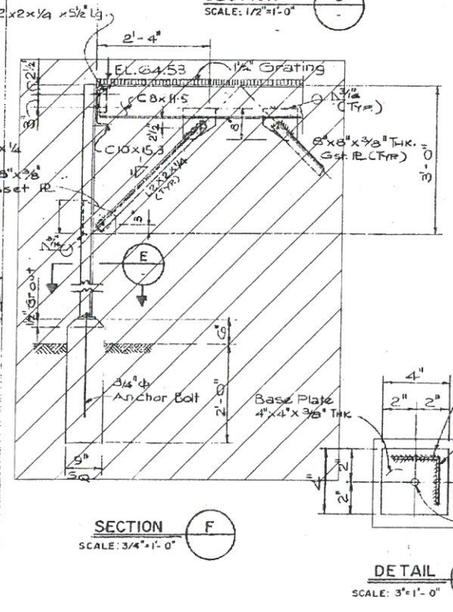

SECTION (F)
SCALE: 3/4"=1'-0"

DETAIL (E)
SCALE: 3"=1'-0"

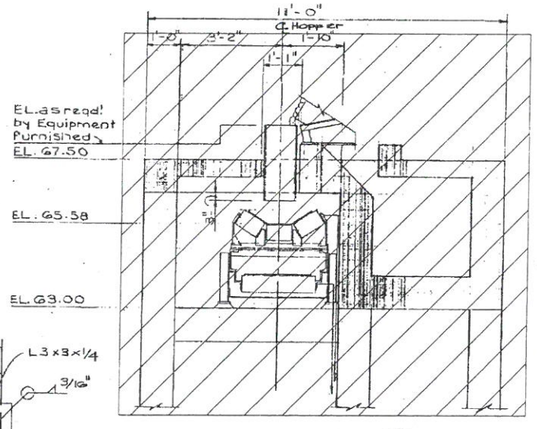

SECTION (G)
SCALE: 1/2"=1'-0"

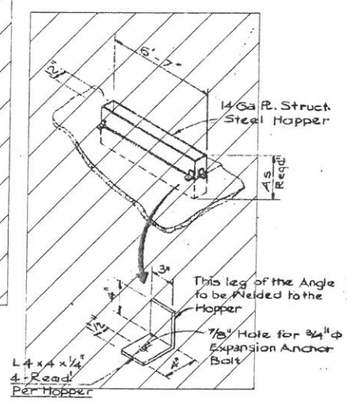

DETAIL OF HOPPER (H)
N.T.S.

DO NOT USE ELEVATIONS SHOWN ON THIS DRAWING FIELD VERIFY ALL ELEVATIONS

TO ARRANGE FOR LINES TO BE TURNED OFF OR MOVED, CALL CENTERPOINT AT 713-207-7777.

PRIVATE UTILITY LINES SHOWN
AT LEAST 48 HOURS BEFORE EXCAVATING IN STREET R.O.W. OR EASEMENTS CALL THE LONE STAR NOTIFICATION 713-223-4567.

Date:

CenterPoint Energy/Electric Facilities
(Approved only for crossing underground ductlines, unless otherwise noted.)
Valid at time of review only.

Date:

SBC Approved for underground conduit facilites only.
Signature valid for one year.

Date:

CenterPoint Energy/Gas Facilities
(Gas service lines are not shown)

No.	Date	Revisions	App.

STATE OF TEXAS
RAMESH KALLURI
68078
REGISTERED PROFESSIONAL ENGINEER
9/19/2011

KGI Kalluri Group, Inc.
Consulting Engineers & Project Managers
TBPE Registration No. F-685
10497 Town & Country Way, Suite 220
Houston, Texas 77024
Phone: (713)-365-9288

Binkley & Barfield, Inc
consulting engineers
Texas Registration Number F-257
1710 Seamist Drive
Houston, Texas 77008-3189
(713) 869-3433

SURVEYED BY: AMANI ENG. | FIELD BOOK NO. : P-5486

CITY OF HOUSTON
DEPARTMENT OF PUBLIC WORKS AND ENGINEERING

ALMEDA SIMS WWTP & SPF IMPROVEMENTS PACKAGE II

SCREENING FACILITY
DEMOLITION
SHEET 4 OF 4

FILE NO:	-
WBS: R-000298-0005-4	
DRAWING SCALE	N.T.S.
CITY OF HOUSTON PM	IRAJ RANJBAR, P.E.
DWG NO. :	C-108
SHEET NO.	17 OF 147

PUBLIC WORKS AND ENGINEERING
ACCEPTED & FILED
49061
CITY DRAWING NUMBER
HOUSTON, TEXAS

WARNING
0 1
IF THIS BAR DOES NOT MEASURE 1" THEN DRAWING IS NOT TO SCALE

V:\Codd\2009\09017 B&B-AlmedaSimsPlant\SWPPP\site plan Proposed_1 Rev1.dwg Sep 21,2011 - 9:35am calpough

IPB

IPB

IPB

RFB

SC

SIMS BAYOU

SIMS BAYOU

COLOR TABLE:

ORIGINAL SCALE IN INCHES FOR REDUCED PLANS

0 1 2 3

TO ARRANGE FOR LINES TO BE TURNED OFF OR MOVED, CALL CENTERPOINT AT 713-207-7777.

PRIVATE UTILITY LINES SHOWN

AT LEAST 48 HOURS BEFORE EXCAVATING IN STREET R.O.W. OR EASEMENTS CALL THE LONE STAR NOTIFICATION 713-223-4567.

Date:

CenterPoint Energy/Electric Facilities
(Approved only for crossing underground ductlines, unless otherwise noted.)
Valid at time of review only.

Date:

SBC Approved for underground conduit facilities only.
Signature valid for one year.

Date:

CenterPoint Energy/Gas Facilities
(Gas service lines are not shown)

No.	Date	Revisions	App.

SRINIVAS A. VELLORE
99425
REGISTERED PROFESSIONAL ENGINEER
01/26/11

AMANI ENGINEERING, INC.
8313 SOUTHWEST FREEWAY
SUITE 350
HOUSTON, TEXAS 77074
TEL: (713) 270-5700
TBPE REG. NO.: F-4528

Binkley & Barfield, Inc
consulting engineers
Texas Registration Number F-257
1710 Seamist Drive
Houston, Texas 77008-3189
(713) 869-3433

SURVEYED BY: AMANI ENG. | FIELD BOOK NO. : P-5486

CITY OF HOUSTON
DEPARTMENT OF PUBLIC WORKS AND ENGINEERING

ALMEDA SIMS WWTP & SPF IMPROVEMENTS PACKAGE II

PROPOSED CHEMICAL FEED FACILITY DRIVEWAY(SOUTH)

STORMWATER POLLUTION PREVENTION PLAN - 1

FILE NO:	–
WBS: R-000298-0005-4	
DRAWING SCALE	1: 20
CITY OF HOUSTON PM	IRAJ RANJBAR, P.E.
DWG NO. : C-110	
SHEET NO. 18 OF 147	

PUBLIC WORKS AND ENGINEERING
ACCEPTED & FILED
490614
CITY DRAWING NUMBER
HOUSTON, TEXAS

LEGEND:

- PROP PAVEMENT
- IPB — INLET PROTECTION BARRIER
- RFB — REINFORCED FILTER FABRIC BARRIER
- MIP — MANHOLE INFLOW PROTECTOR
- IST — STORM INLET SEDIMENT TRAPS
- SC — STABILIZED CONSTRUCTION EXIT
- DIRECTION OF OVERLAND OR OPEN DITCH FLOW
- HIGH POINT OF DRAINAGE AREA
- EXIST STORM INLET

NOTES:

1. STORM WATER POLLUTION PREVENTION PLAN SHALL BE IN ACCORDANCE WITH SPECIFICATIONS AND DRAWINGS.
2. ALL DISTURBED AREAS THAT ARE NOT PAVED, COVERED BY PAVEMENT, SIDEWALK OR STRUCTURE SHALL BE SODDED.
3. PROVIDE A STABILIZED CONSTRUCTION EXIT IN THE CONTRACTOR'S LAY DOWN/STORAGE AREA.

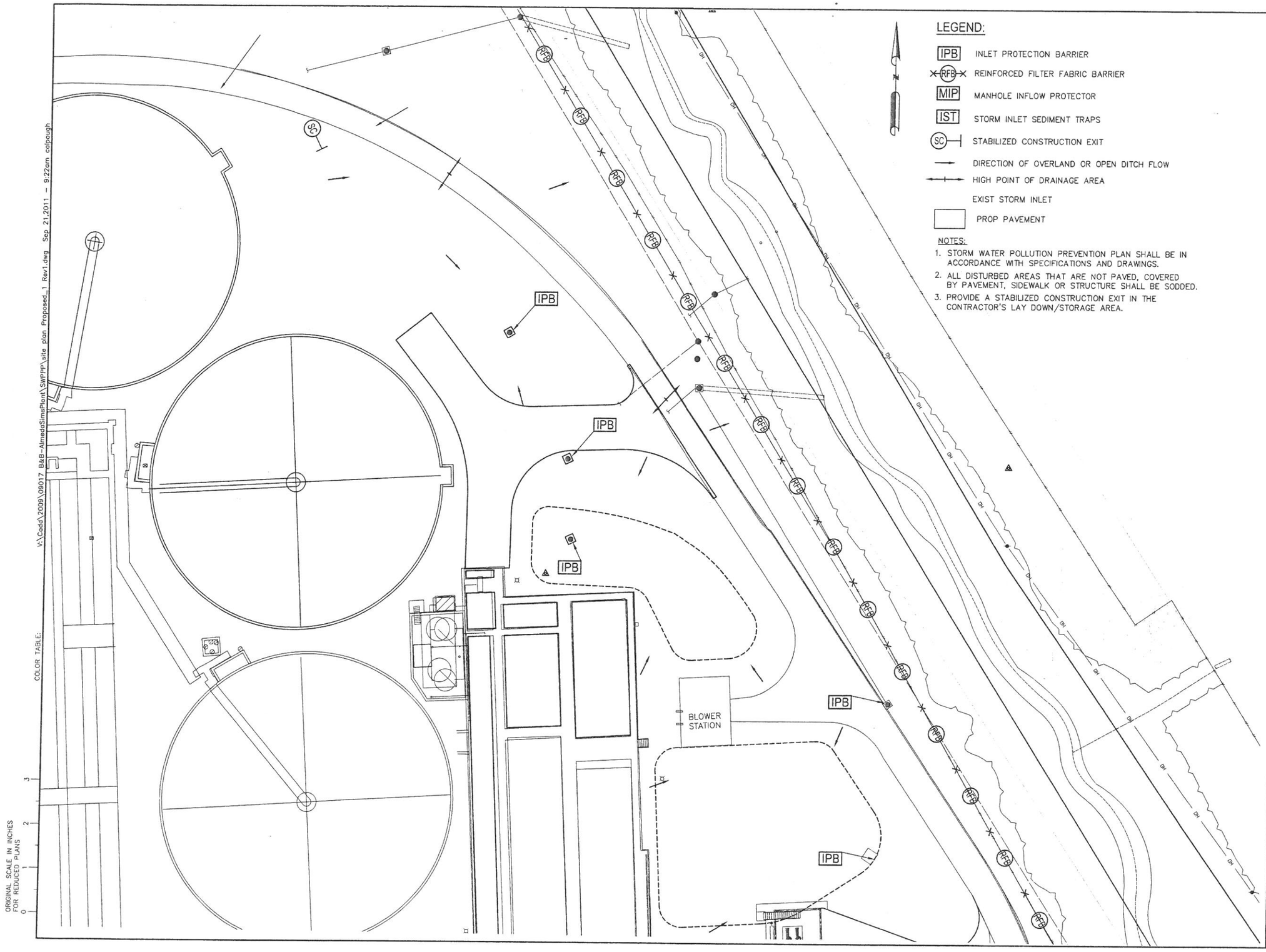

V:\Cadd\2009\09017 B&B-AlmedaSimsPlant\SWPPP\site plan Proposed_1 Rev1.dwg Sep 21,2011 - 9:22am colpough

TO ARRANGE FOR LINES TO BE TURNED OFF OR MOVED, CALL CENTERPOINT AT 713-207-7777.

PRIVATE UTILITY LINES SHOWN
AT LEAST 48 HOURS BEFORE EXCAVATING IN STREET R.O.W. OR EASEMENTS CALL THE LONE STAR NOTIFICATION 713-223-4567.

Date:

CenterPoint Energy/Electric Facilities
(Approved only for crossing underground ductlines, unless otherwise noted.) Valid at time of review only.

Date:

SBC Approved for underground conduit facilities only. Signature valid for one year.

Date:

CenterPoint Energy/Gas Facilities
(Gas service lines are not shown)

No.	Date	Revisions	Acn.

STATE OF TEXAS
SRINIVAS A. VELLORE
99425
REGISTERED PROFESSIONAL ENGINEER
01/26/11

AMANI ENGINEERING, INC.
8313 SOUTHWEST FREEWAY
SUITE 350
HOUSTON, TEXAS 77074
TEL: (713) 270-5700
TBPE REG. NO.: F-4528

Binkley & Barfield, Inc
consulting engineers
Texas Registration Number F-257
1710 Seamist Drive
Houston, Texas 77008-3189
(713) 869-3433

SURVEYED BY: AMANI ENG. | FIELD BOOK NO. : P-5486

CITY OF HOUSTON
DEPARTMENT OF PUBLIC WORKS AND ENGINEERING

ALMEDA SIMS WWTP & SPF IMPROVEMENTS PACKAGE II
PROPOSED CHEMICAL FEED FACILITY DRIVEWAY(NORTH)

STORMWATER POLLUTION PREVENTION PLAN - 2

FILE NO:	–
WBS: R-000298-0005-4	
DRAWING SCALE	1: 20
CITY OF HOUSTON PM	IRAJ RANJBAR, P.E.
DWG NO. : C-111	
SHEET NO. 19 OF 147	

PUBLIC WORKS AND ENGINEERING
ACCEPTED & FILED
49061
CITY DRAWING NUMBER
HOUSTON, TEXAS

V:\Cadd\2009\0807 5&8 - Almeda Sims Plant\SWPPP_C-302 Almeda Road and Railroad Crossing SWPPP Rev1.dwg Sep 20,2011 - 4:43pm calpough

ALMEDA ROAD

20" WATER

18" STORM SEWER

SBC 9-3 ½" TRANS

CENTERPOINT ENERGY
12" HPT STL GAS LINE

84" CONC TRUNK SAN SEWER

EXIST 8" WATER MAIN

EXIST
WATER METER

CONCRETE
DRIVE

EXIST 8" WATER MAIN

CONCRETE
DRIVE

WEST LIFT
PUMP STATION

ORIGINAL SCALE IN INCHES
FOR REDUCED PLANS

LEGEND:

- IPB — INLET PROTECTION BARRIER
- RFB — REINFORCED FILTER FABRIC BARRIER
- MIP — MANHOLE INFLOW PROTECTOR
- IST — STORM INLET SEDIMENT TRAPS
- SC — STABILIZED CONSTRUCTION EXIT
- DIRECTION OF OVERLAND OR OPEN DITCH FLOW
- HIGH POINT OF DRAINAGE AREA
- EXIST STORM INLET

NOTES:

1. STORM WATER POLLUTION PREVENTION PLAN SHALL BE IN ACCORDANCE WITH SPECIFICATIONS AND DRAWINGS.
2. ALL DISTURBED AREAS THAT ARE NOT PAVED, COVERED BY PAVEMENT, SIDEWALK OR STRUCTURE SHALL BE SODDED.
3. PROVIDE A STABILIZED CONSTRUCTION EXIT IN THE CONTRACTOR'S LAY DOWN/STORAGE AREA.

No.	Date	Revisions	App.

SRINIVAS A. VELLORE
39425
REGISTERED
PROFESSIONAL ENGINEER
01/26/12

AMANI
ENGINEERING, INC.
8313 SOUTHWEST FREEWAY
SUITE 350
HOUSTON, TEXAS 77074
TEL: (713) 270-5700
TBPE REG. NO.: F-4528

Binkley
&Barfield, Inc
consulting engineers
Texas Registration Numaer F-257
1710 Seamist Drive
Houston, Texas 77008-3189
(713) 869-3433

SURVEYED BY: AMANI ENG. | FIELD BOOK NO. : P-5486

CITY OF HOUSTON
DEPARTMENT OF PUBLIC WORKS AND ENGINEERING

ALMEDA SIMS WWTP & SPF IMPROVEMENTS PACKAGE II

STORMWATER POLLUTION PREVENTION PLAN-3

FILE NO:	–
WBS: R-000298-0005-4	
DRAWING SCALE	1"=15'
CITY OF HOUSTON PM	IRAJ RANJBAR, P.E.
DWG NO. :	C-112
SHEET NO.	20 OF 147

PUBLIC WORKS AND ENGINEERING
ACCEPTED & FILED
49061
CITY DRAWING NUMBER
HOUSTON, TEXAS

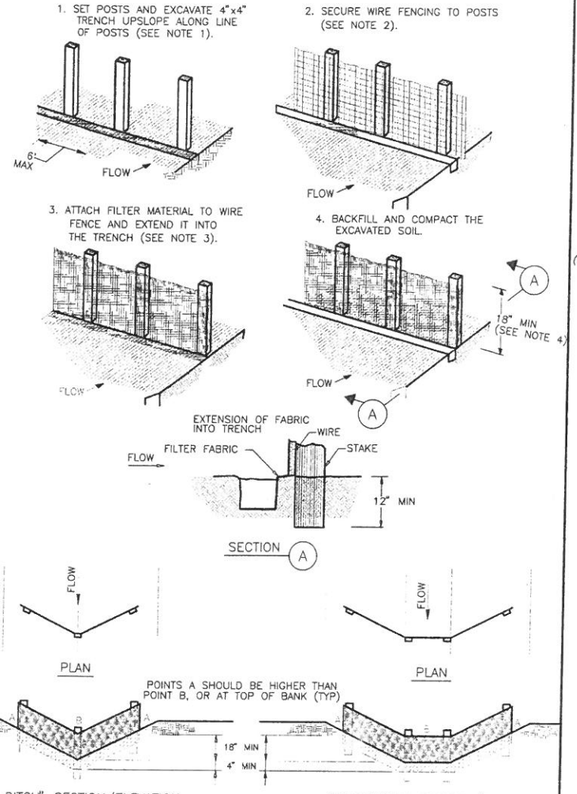

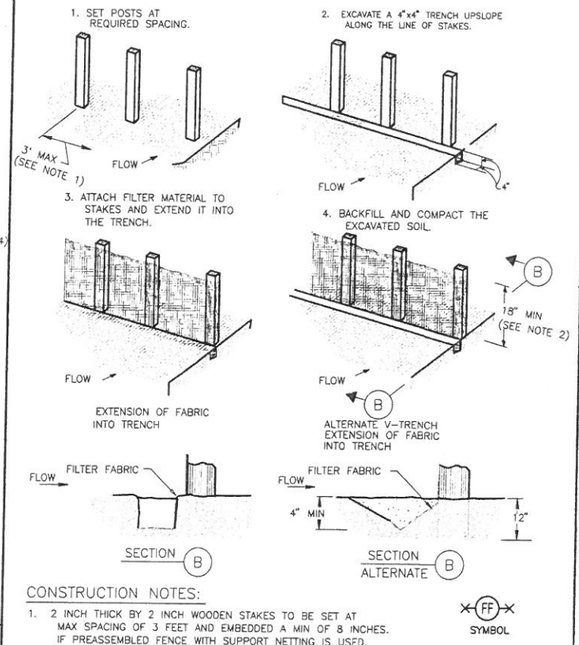

CONSTRUCTION NOTES:

1. 2 INCH THICK BY 2 INCH WOODEN STAKES TO BE SET AT MAX SPACING OF 3 FEET AND EMBEDDED A MIN OF 8 INCHES. IF PREASSEMBLED FENCE WITH SUPPORT NETTING IS USED, SPACING OF POST MAY BE INCREASED TO 8 FEET MAX.
2. ATTACH FILTER FABRIC TO WOODEN STAKES. FILTER FABRIC FENCE SHALL HAVE A MIN HEIGHT OF 18 INCHES AND MAX HEIGHT OF 36 INCHES ABOVE NATURAL GROUND.
3. WHEN TWO SECTIONS OF FILTER CLOTH ADJOIN EACH OTHER THEY SHOULD BE OVERLAPPED 6 INCHES AT THE POSTS, AND FOLDED.
4. SEE COH STANDARD SPECIFICATION FOR FILTER FABRIC FENCE.

FF SYMBOL

FILTER FABRIC FENCE

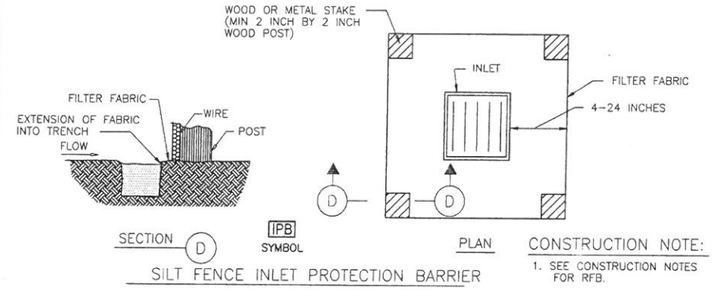

CONSTRUCTION NOTE:

1. SEE CONSTRUCTION NOTES FOR RFB.

SILT FENCE INLET PROTECTION BARRIER

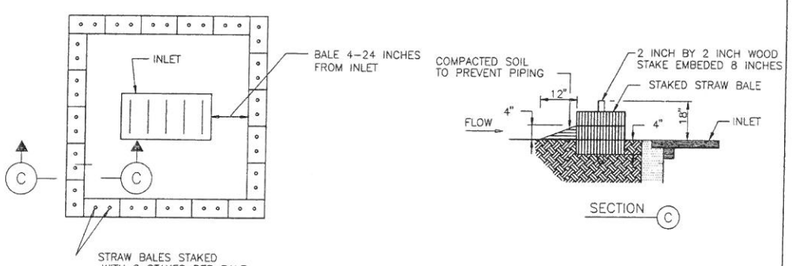

STRAW BALE DROP INLET PROTECTION BARRIER

CONSTRUCTION NOTES:

1. SET 2 INCH BY 2 INCH WOODEN STAKES SPACED A MAX OF 6 FEET APART AND EMBEDDED A MIN OF 12 INCHES.
2. WOVEN WIRE FENCE TO BE FASTENED SECURELY TO FENCE POSTS WITH STAPLES.
3. FILTER CLOTH TO BE FASTENED SECURELY TO WOVEN WIRE FENCE, WITH TIES SPACED EVERY 24 INCHES AT TOP AND MIDSECTION.
4. MINIMUM HEIGHT OF FILTER SHOULD BE 18 INCHES AND A MAXIMUM OF 36 INCHES ABOVE NATURAL GROUND.
5. WHEN TWO SECTIONS OF FILTER CLOTH ADJOIN EACH OTHER THEY SHALL BE OVERLAPPED 6 INCHES AT THE POSTS, AND FOLDED.
6. SEE COH STANDARD SPECIFICATION FOR FILTER FABRIC BARRIER.

RFB SYMBOL

REINFORCED FILTER FABRIC BARRIER

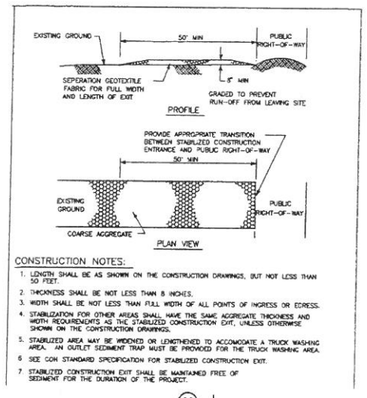

CONSTRUCTION NOTES:

1. LENGTH SHALL BE AS SHOWN ON THE CONSTRUCTION DRAWINGS, BUT NOT LESS THAN 50 FEET.
2. THICKNESS SHALL BE NOT LESS THAN 8 INCHES.
3. WIDTH SHALL BE NOT LESS THAN FULL WIDTH OF ALL POINTS OF INGRESS OR EGRESS.
4. STABILIZATION FOR OTHER AREAS SHALL HAVE THE SAME AGGREGATE THICKNESS AND WIDTH REQUIREMENTS AS THE STABILIZED CONSTRUCTION EXIT, UNLESS OTHERWISE SHOWN ON THE CONSTRUCTION DRAWINGS.
5. STABILIZED AREA MAY BE WIDENED OR LENGTHENED TO ACCOMODATE A TRUCK WASHING AREA. AN OUTLET SEDIMENT TRAP MUST BE PROVIDED FOR THE TRUCK WASHING AREA.
6. SEE COH STANDARD SPECIFICATION FOR STABILIZED CONSTRUCTION EXIT.
7. STABILIZED CONSTRUCTION EXIT SHALL BE MAINTAINED FREE OF SEDIMENT FOR THE DURATION OF THE PROJECT.

SC SYMBOL

STABILIZED CONSTRUCTION EXIT

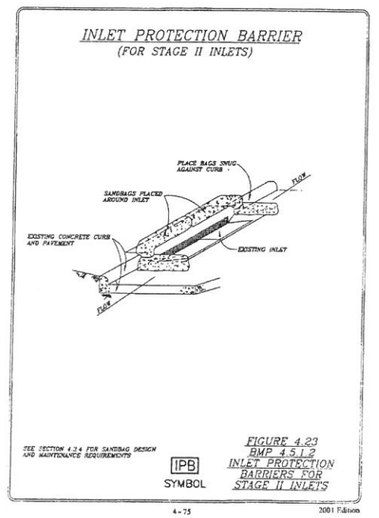

No.	Date	Revisions	AED

STATE OF TEXAS
SRINIVAS A. VELLORE
99425
REGISTERED PROFESSIONAL ENGINEER
01/26/14

AMANI ENGINEERING, INC.
8313 SOUTHWEST FREEWAY
SUITE 350
HOUSTON, TEXAS 77074
TEL: (713) 270-5700
TBPE REG. NO.: F-4528

Binkley & Barfield, Inc
consulting engineers
Texas Registration Number F-257
1710 Seamist Drive
Houston, Texas 77008-3189
(713) 869-3433

SURVEYED BY: AMANI ENG. FIELD BOOK NO. : P-5486

CITY OF HOUSTON
DEPARTMENT OF PUBLIC WORKS AND ENGINEERING

ALMEDA SIMS WWTP & SPF IMPROVEMENTS PACKAGE II

SWPPP DETAILS

FILE NO:	-
WBS: R-000298-0005-4	
DRAWING SCALE	
AS SHOWN	
CITY OF HOUSTON PM	
IRAJ RANJBAR, P.E.	
DWG NO. :	C-113
SHEET NO. 21 OF 147	

PUBLIC WORKS AND ENGINEERING
ACCEPTED & FILED
490614
CITY DRAWING NUMBER
HOUSTON, TEXAS

COLOR TABLE:

ORIGINAL SCALE IN INCHES FOR REDUCED PLANS
0 1 2 3

V:\Cadd\2009\09017 B&B-Almeda Sims Plant\SWPPP\SWPPP DETAILS.dwg Sep 20,2011 - 4:52pm calpough

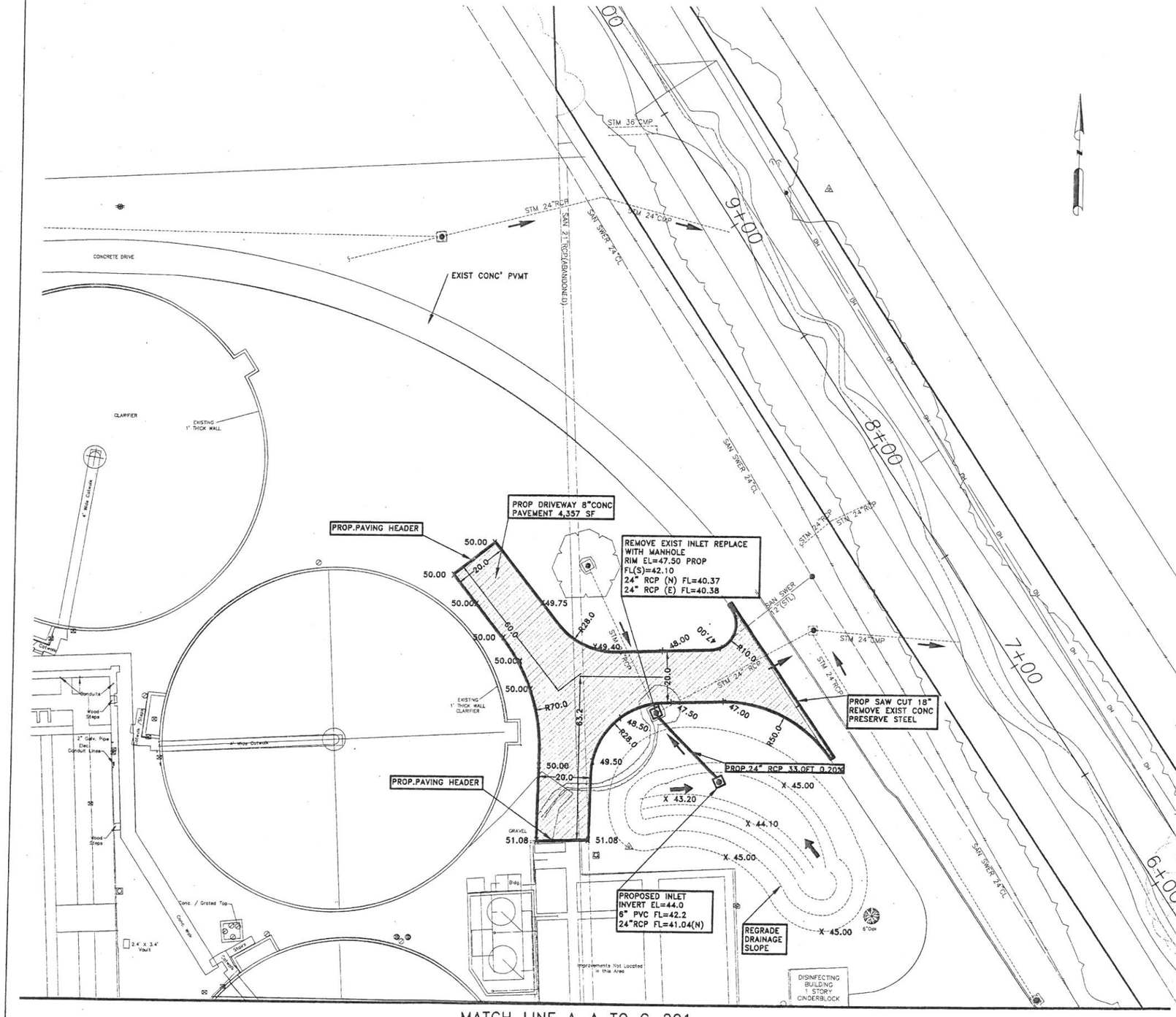

MATCH LINE A–A TO C–201

PROPOSED INLET DETAIL

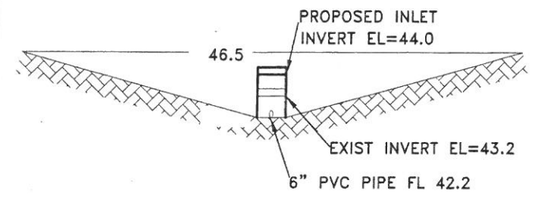

N.T.S.

SHEET	IMPERVIOUS AREA	CUT	FILL
C-200	4,357(FT²)	200CY	0

DETENTION REQUIRED
(0.2AC-FT/AC OF INCREASED IMPERVIOUS AREA COVER)
=0.2*(4,357+9,691)FT²=2810FT³/27=104CY

DETENTION PROVIDED ON SITE: (200+416)=616CY (MAXIMUM)
58CY BELOW THE PROPOSED INVERT EL 44.00 (C-200)
52CY BELOW THE PROPOSED INVERT EL 44.50(C-201)
TOTAL 110CY (>104CY)

No.	Date	Revisions	App.

STATE OF TEXAS
VINCENT N. JACOB
98325
LICENSED
PROFESSIONAL ENGINEER
Vincent N. Jacob
9/22/11

iSani CONSULTANTS TBPE#-4575
3143 YELLOWSTONE BLVD HOUSTON, TX 77054
TEL: (713) 747-2399 FAX: (713) 748-3748

Binkley & Barfield, Inc.
consulting engineers
Texas Registration Number F-257
1710 Seamist Drive
Houston, Texas 77008-3189
(713) 869-3433

SURVEYED BY: AMANI ENG. | FIELD BOOK NO. : P-5486

CITY OF HOUSTON
DEPARTMENT OF PUBLIC WORKS AND ENGINEERING

ALMEDA SIMS WWTP & SPF IMPROVEMENTS PACKAGE II

PROPOSED CHEMICAL FEED FACILITY DRIVEWAY (NORTH)

FILE NO:	
WBS: R-000298-0005-4	
SCALE	1:20
DATE	SEPTEMBER 2011
CITY OF HOUSTON PM	
IRAJ RANJBAR, P.E.	
DWG NO.	C-200
SHEET NO. 22 OF 147	

PUBLIC WORKS AND ENGINEERING
ACCEPTED & FILED
49061
CITY DRAWING NUMBER
HOUSTON, TEXAS

9/21/2011 12:32:5 PM

MATCH LINE A-A TO C-200

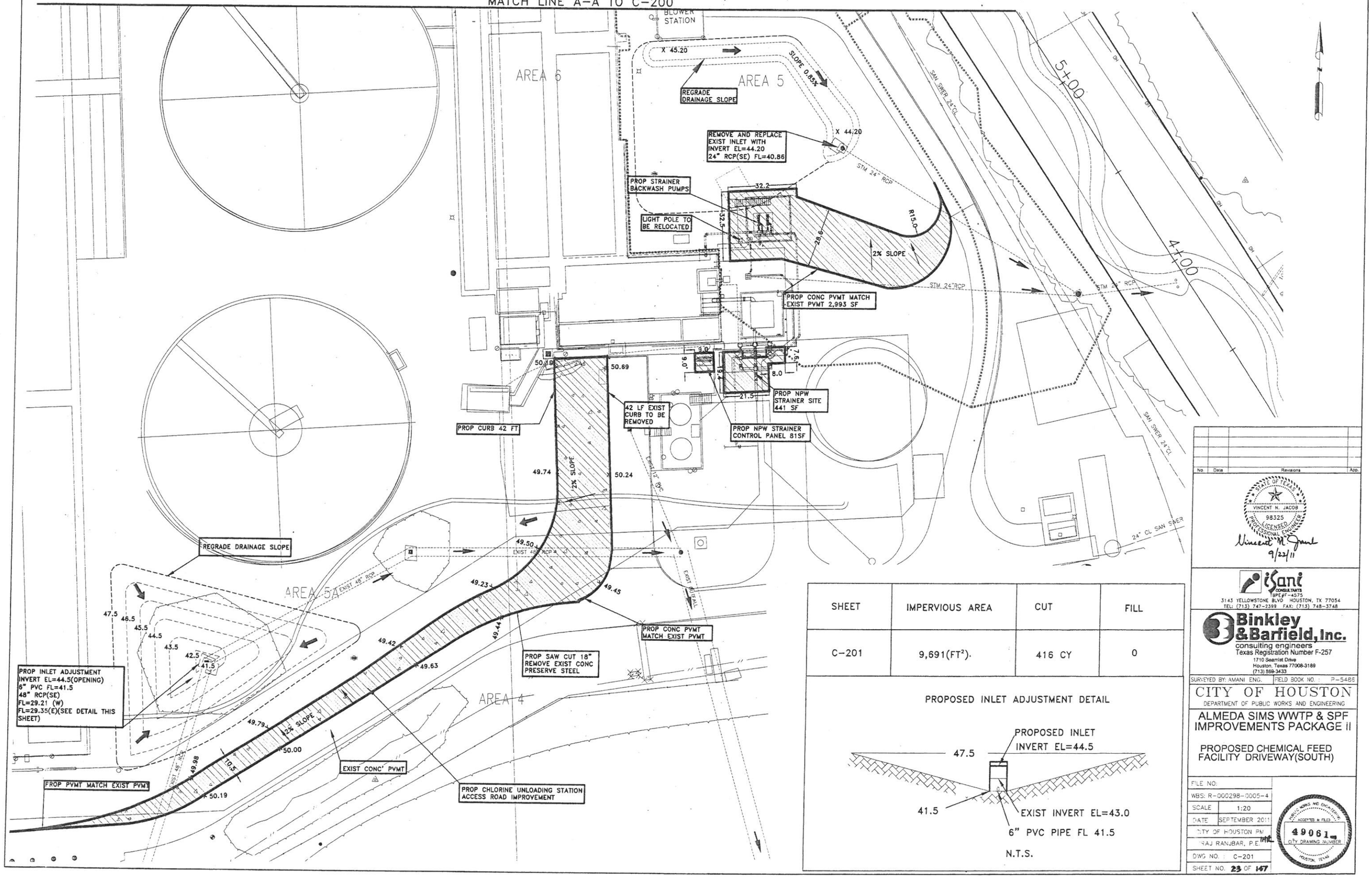

SHEET	IMPERVIOUS AREA	CUT	FILL
C-201	9,691(FT²).	416 CY	0

PROPOSED INLET ADJUSTMENT DETAIL

No.	Date	Revisions	App.

STATE OF TEXAS
VINCENT N. JACOB
98325
LICENSED PROFESSIONAL ENGINEER
9/22/11

iSani CONSULTANTS TBPE#F-4575
3143 YELLOWSTONE BLVD HOUSTON, TX 77054
TEL: (713) 747-2399 FAX: (713) 748-3748

Binkley & Barfield, Inc.
consulting engineers
Texas Registration Number F-257
1710 Seamist Drive
Houston, Texas 77008-3189
(713) 869-3433

SURVEYED BY: AMANI ENG. | FIELD BOOK NO.: P-5486

CITY OF HOUSTON
DEPARTMENT OF PUBLIC WORKS AND ENGINEERING

ALMEDA SIMS WWTP & SPF IMPROVEMENTS PACKAGE II

PROPOSED CHEMICAL FEED FACILITY DRIVEWAY(SOUTH)

FILE NO.	
WBS: R-000298-0005-4	
SCALE	1:20
DATE	SEPTEMBER 2011
CITY OF HOUSTON PM	
RAJ RANJBAR, P.E.	
DWG NO.	C-201
SHEET NO.	23 OF 167

ACCEPTED & FILED
49061
CITY DRAWING NUMBER

9/21/2011 1:34:20 PM

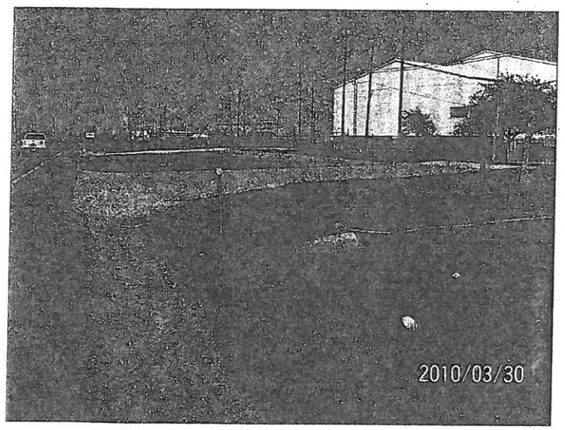

A — EXIST WATER METER LOCATION WITHIN ALMEDA ROAD R.O.W.

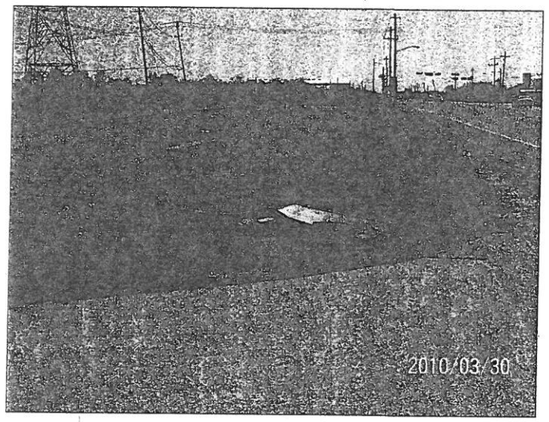

B — EXIST WATER METER LOCATION FACING SOUTH

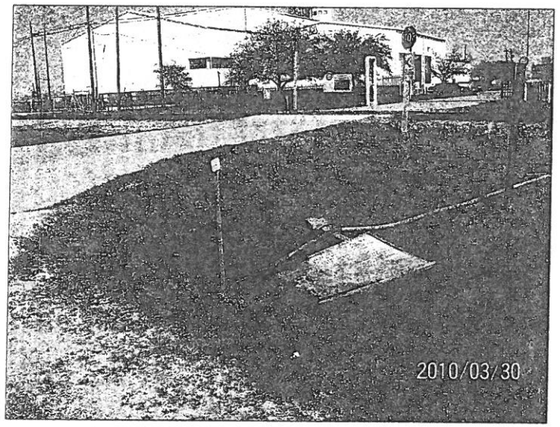

C — EXIST WATER METER LOCATION FACING WWTP GATE

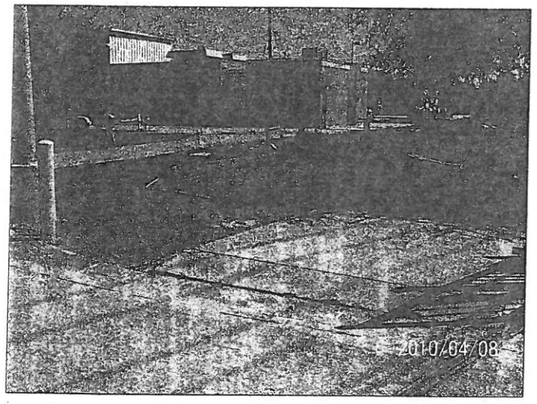

D — EXIST BACKFLOW PREVENTER LOCATION INSIDE ALMEDA SIMS WWTP

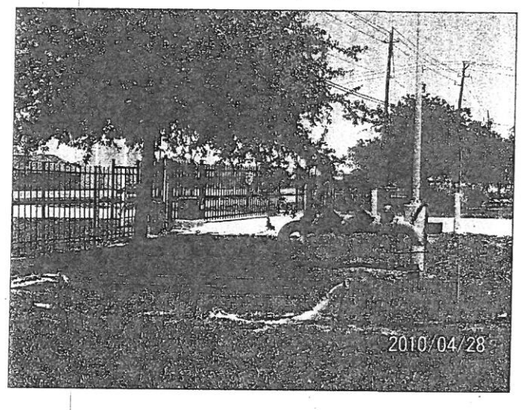

E — EXIST BACKFLOW PREVENTER LOCATION

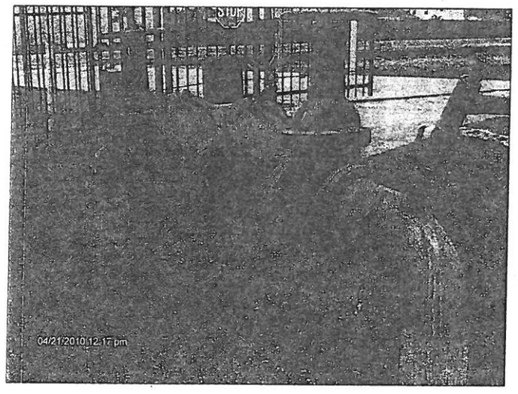

F — EXIST BACKFLOW PREVENTER LOCATION

NOTES:

1. EXIST WATER METER LOCATED WITHIN ALMEDA ROAD R.O.W.
2. EXIST BACKFLOW PREVENTER LOCATED INSIDE ALMEDA SIMS WWTP. NEAR ENTRANCE GATE.
3. FIELD LOCATE EXIST WATER LINE. CONTRACTOR SHALL PERFORM FIELD PROBING AND POTHOLE TEST TO LOCATE THE EXISTING UNDERGROUND PIPES & UTILITIES.
4. CONTRACTOR SHALL RESTORE PAVEMENT UPON COMPLETION OF THE UNDERGROUND WORK.

TO ARRANGE FOR LINES TO BE TURNED OFF OR MOVED, CALL CENTERPOINT AT 713-207-7777.

PRIVATE UTILITY LINES SHOWN
AT LEAST 48 HOURS BEFORE EXCAVATING IN STREET R.O.W. OR EASEMENTS CALL THE LONE STAR NOTIFICATION 713-223-4567.

Date:

CenterPoint Energy/Electric Facilities
(Approved only for crossing underground ductlines, unless otherwise noted.)
Valid at time of review only.

Date:

SBC Approved for underground conduit facilites only.
Signature valid for one year.

Date:

CenterPoint Energy/Gas Facilities
(Gas service lines are not shown)

No.	Date	Revisions	App.

STATE OF TEXAS
LI CHUNG CHEN
98576
REGISTERED PROFESSIONAL ENGINEER
9-21-2011

Binkley & Barfield, Inc
consulting engineers
Texas Registration Number F-257
1710 Seamist Drive
Houston, Texas 77008-3189
(713) 869-3433

SURVEYED BY: AMANI ENG. | FIELD BOOK NO. : P-5486

CITY OF HOUSTON
DEPARTMENT OF PUBLIC WORKS AND ENGINEERING

ALMEDA SIMS WWTP & SPF IMPROVEMENTS PACKAGE II

EXIST WATER METER AND BACKFLOW PREVENTER SITE PHOTOS

FILE NO:	-
WBS: R-000298-0005-4	
DRAWING SCALE	NTS
CITY OF HOUSTON PM	IRAJ RANJBAR, P.E.
DWG NO. :	C-300
SHEET NO.	24 OF 147

PUBLIC WORKS AND ENGINEERING
ACCEPTED & FILED
49061
CITY DRAWING NUMBER
HOUSTON, TEXAS

G:\115805 Almeda Sims Package II\Cadd Dwgs\C-300 Exist Water Meter and Backflow Preventer Site Photos.dwg Sep 21,2011 - 2:53pm RPD

COLOR TABLE:

ORIGINAL SCALE IN INCHES FOR REDUCED PLANS
0 1 2 3

G:\115805 Almeda Sims Package II\Cadd Dwgs_C-301 Exist Water Meter Site Plan.dwg Sep 22,2011 - 2:20pm RPD

ALMEDA ROAD

MAINTENANCE BUILDING

ELECT PB

ELECT PB

ELECT GATE

EXIST 2" PW TO MAINTENANCE BLDG (LOCATION UNKNOWN)

CONCRETE DRIVE

LIGHT POLE BOLLARD

CONC PAD

SECURITY CAMERA POLE

EXIST 8" PW

EXIST BP

8" OAK

TBM

PP

ELECT CONDUIT (APPROX)

COMM BOX

EXIST 2" PW TO WEST LS (LOCATION UNKNOWN)

CONDUIT MARKER

ELECT CONDUIT (LOCATION APPROX)

CONCRETE DRIVE

ELECT PB

WEST LIFT PUMP STATION

EXIST WATER METER

EXIST 8" PW

SBC 9"x 1" I"AVS

CENTERPOINT ENERGY 12" HPT STL GAS LINE

H.B. & T RAIL ROAD

COLOR TABLE:

ORIGINAL SCALE IN INCHES FOR REDUCED PLANS

0 1 2 3

NOTES:

1. CONDUIT ROUTING AND WATER LINES ARE SHOWN SCHEMATIC IN NATURE, AND SHALL BE FIELD VERIFIED.
2. FIELD LOCATE EXIST WATER LINE. CONTRACTOR SHALL PERFORM FIELD PROBING AND POTHOLE TEST TO LOCATE THE EXISTING UNDERGROUND PIPES & UTILITIES. CONTRACTOR SHALL BE CAREFUL TO AVOID DAMAGE TO EXISTING UNDERGROUND UTILITIES
3. CONTRACTOR SHALL RESTORE THE PAVEMENT UPON COMPLETION OF THE UNDERGROUND WORK.

TO ARRANGE FOR LINES TO BE TURNED OFF OR MOVED, CALL CENTERPOINT AT 713-207-7777.

PRIVATE UTILITY LINES SHOWN

AT LEAST 48 HOURS BEFORE EXCAVATING IN STREET R.O.W. OR EASEMENTS CALL THE LONE STAR NOTIFICATION 713-223-4567.

Date:

CenterPoint Energy/Electric Facilities
(Approved only for crossing underground ductlines, unless otherwise noted.)
Valid at time of review only.

Date:

SBC Approved for underground conduit facilities only.
Signature valid for one year.

Date:

CenterPoint Energy/Gas Facilities
(Gas service lines are not shown)

No.	Date	Revisions	Appr

STATE OF TEXAS
LI CHUNG CHEN
98576
REGISTERED PROFESSIONAL ENGINEER
9-21-2011

Binkley & Barfield, Inc
consulting engineers
Texas Registration Number F-257
1710 Seamist Drive
Houston, Texas 77008-3189
(713) 869-3433

SURVEYED BY: AMANI ENG. | FIELD BOOK NO. : P-5486

CITY OF HOUSTON
DEPARTMENT OF PUBLIC WORKS AND ENGINEERING

ALMEDA SIMS WWTP & SPF IMPROVEMENTS PACKAGE II

EXIST WATER METER SITE PLAN

FILE NO:	-
WBS: R-000298-0005-4	
DRAWING SCALE	1"=10'
CITY OF HOUSTON PM	IRAJ RANJBAR, P.E.
DWG NO. :	C-301
SHEET NO.	25 OF 147

PUBLIC WORKS AND ENGINEERING
ACCEPTED & FILED
49061
CITY DRAWING NUMBER
HOUSTON, TEXAS

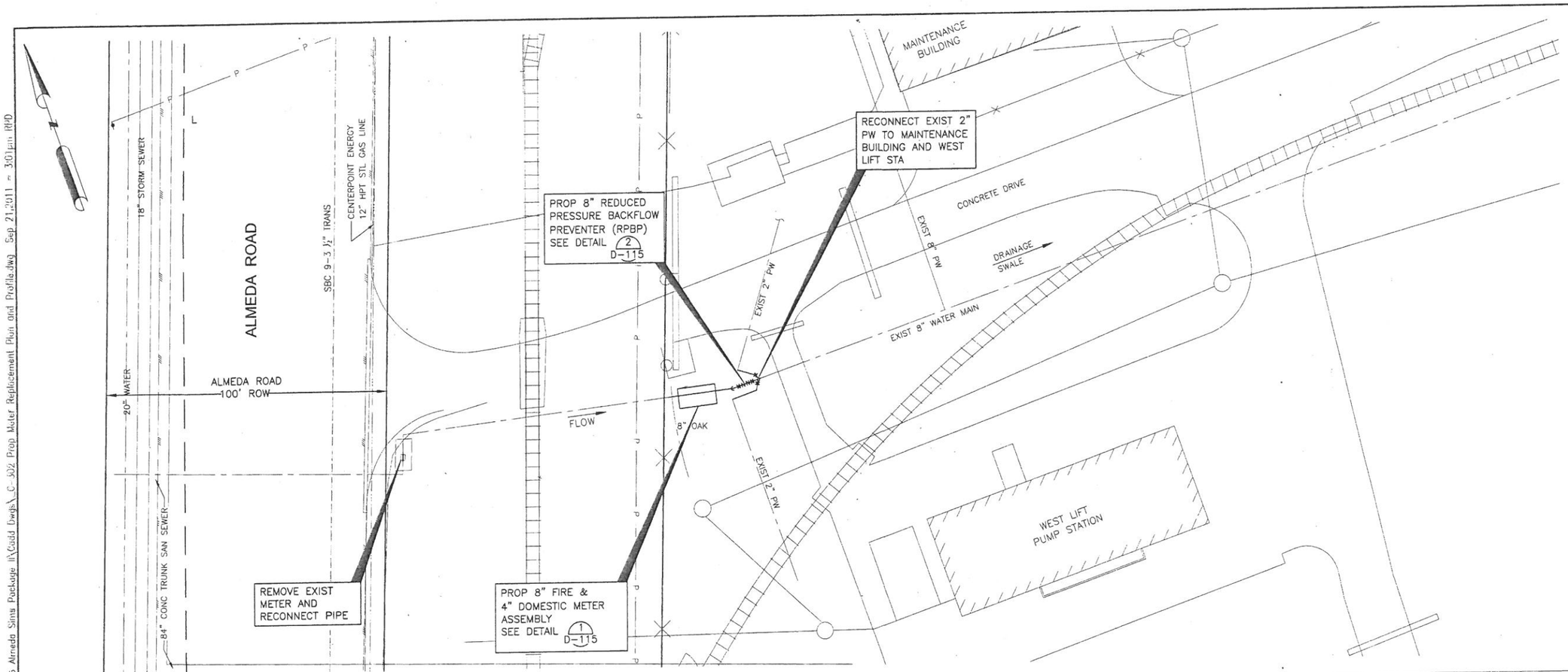

NOTES:

1. CONTRACTOR SHALL FIELD VERIFY SITE CONDITIONS, AND PERFORM PROBING AND POTHOLE TESTING TO LOCATE THE EXISTING YARD PIPING AND UTILITY LINES.
2. REMOVAL OF THE EXIST WATER METER AND INSTALLATION OF NEW METER MUST BE PERFORMED BY A CITY OF HOUSTON AUTHORIZED PLUMBER. CONTACT CITY OF HOUSTON UTILITY DEPT. TO OBTAIN THE CURRENT LIST OF AUTHORIZED PLUMBERS.
3. CONTRACTOR IS RESPONSIBLE FOR EXIST METER REMOVAL, RETURN OF OLD METER TO THE CITY, AND APPLICATION FOR A NEW COMPOUND FIRE & DOMESTIC METER INSTALLATION INCLUDING METER TESTING.
4. THE NEW WATER METERING STATION AND RPBP STATION SHALL BE INSPECTED AND APPROVED BY THE CITY WATER METER INSPECTOR.
5. CONTRACTOR SHALL COORDINATE WITH CONSTRUCTION MANAGER AND CITY OF HOUSTON UTILITY DEPT. TO ARRANGE TIME FOR WATER SHUT DOWN AND TO PROVIDE TEMPORARY POTABLE WATER SUPPLY FOR THE PLANT DURING CONSTRUCTION.
6. RECONNECT THE EXIST POTABLE WATER LINES FOR THE MAINT BLDG AND WEST LIFT STA.
7. CONTRACTOR SHALL RESTORE PAVEMENT UPON COMPLETION OF THE UNDERGROUND WORK.

TO ARRANGE FOR LINES TO BE TURNED OFF OR MOVED, CALL CENTERPOINT AT 713-207-7777.

PRIVATE UTILITY LINES SHOWN
AT LEAST 48 HOURS BEFORE EXCAVATING IN STREET R.O.W. OR EASEMENTS CALL THE LONE STAR NOTIFICATION 713-223-4567.

Date:
CenterPoint Energy/Electric Facilities
(Approved only for crossing underground ductlines, unless otherwise noted.)
Valid at time of review only.

Date:
SBC Approved for underground conduit facilities only.
Signature valid for one year.

Date:
CenterPoint Energy/Gas Facilities
(Gas service lines are not shown)

No.	Date	Revisions	App.

STATE OF TEXAS
LI CHUNG CHEN
98576
REGISTERED PROFESSIONAL ENGINEER
9-21-2011

Binkley & Barfield, Inc
consulting engineers
Texas Registration Number F-257
1710 Seamist Drive
Houston, Texas 77008-3189
(713) 869-3433

SURVEYED BY: AMANI ENG. | FIELD BOOK NO. : P-5486

CITY OF HOUSTON
DEPARTMENT OF PUBLIC WORKS AND ENGINEERING

ALMEDA SIMS WWTP & SPF IMPROVEMENTS PACKAGE II

PROPOSED NEW WATER METER AND RPBP PLAN AND PROFILE

FILE NO:	-
WBS:	R-000298-0005-4
DRAWING SCALE	
HORIZ:1"=20', VERT:1"=2'	
CITY OF HOUSTON PM	IRAJ RANJBAR, P.E.
DWG NO. :	C-302
SHEET NO.	26 OF 147

PUBLIC WORKS AND ENGINEERING ACCEPTED & FILED 49061 CITY DRAWING NUMBER HOUSTON, TEXAS

G:\115805 Almeda Sims Package II\Cadd Dwgs\C-302 Prop Meter Replacement Plan and Profile.dwg Sep 21,2011 - 3:01pm RHD

COLOR TABLE: 3 2 1 0

ORIGINAL SCALE IN INCHES FOR REDUCED PLANS

G:\115805 Almeda Sims Package II\Cadd Dwgs\C-303 Existing NPW Strainer Site.dwg Jan 10,2012 - 9:23am rpd

EXIST CHLORINE CONTACT BASIN

TEMPORARY RELOCATED NPW PUMPS (IF REQ'D)

EXIST NPW PUMPS

EXIST WATER LINE FIELD VERIFY FOR RELOCATION

EXIST LIGHT POLE

EXIST TYPE A INLET
TG 53.0
IE 47.9

EXIST NPW PUMP STATION

EXIST EFFLUENT CHANNEL

EDGE OF EXIST CONC PAVING

EXIST NPW STRAINER

EXIST EAST LIFT STATION

EXIST SUBMERSIBLE NPW PUMPS ON CONC PAD

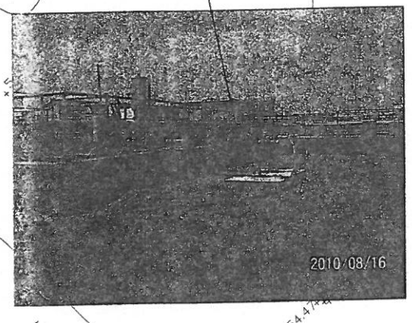

EXIST 12" NPW PIPE

EXIST 8" DRAIN

EXIST SODIUM BISULFITE TANK BASIN

COLOR TABLE:

ORIGINAL SCALE IN INCHES FOR REDUCED PLANS
0 1 2 3

NOTES:

1. CONTRACTOR SHALL ALLOW THE EXISTING SUBMERSIBLE NPW PUMPS TO SUPPLY NPW TO MEET WWTP OPERATION DEMAND.
2. IF REQUIRED, TEMPORARILY RELOCATE THE EXISTING SUBMERSIBLE NPW PUMPS INCLUDING CONC PAD, PIPING AND ELECTRICAL, AND SHALL BE ADJUSTED FOR FIELD CONDITIONS.
3. CONTRACTOR SHALL HAND DIG TO AVOID DAMAGE TO EXISTING UNDERGROUND UTILITIES.
4. CONTRACTOR SHALL RESTORE THE CONCRETE UPON COMPLETION OF THE UNDERGROUND WORK.

TO ARRANGE FOR LINES TO BE TURNED OFF OR MOVED, CALL CENTERPOINT AT 713-207-7777.

PRIVATE UTILITY LINES SHOWN

AT LEAST 48 HOURS BEFORE EXCAVATING IN STREET R.O.W. OR EASEMENTS CALL THE LONE STAR NOTIFICATION 713-223-4567.

Date:

CenterPoint Energy/Electric Facilities
(Approved only for crossing underground ductlines, unless otherwise noted.)
Valid at time of review only.

Date:

SBC Approved for underground conduit facilities only.
Signature valid for one year.

Date:

CenterPoint Energy/Gas Facilities
(Gas service lines are not shown)

No.	Date	Revisions	App.

STATE OF TEXAS
LI CHUNG CHEN
98576
REGISTERED PROFESSIONAL ENGINEER
1-9-2012

Binkley & Barfield, Inc
consulting engineers
Texas Registration Number F-257
1710 Seamist Drive
Houston, Texas 77008-3189
(713) 869-3433

SURVEYED BY: AMANI ENG. | FIELD BOOK NO. : P-5486

CITY OF HOUSTON
DEPARTMENT OF PUBLIC WORKS AND ENGINEERING

ALMEDA SIMS WWTP & SPF IMPROVEMENTS PACKAGE II

EXIST NPW PUMP STATION AND STRAINER

FILE NO:	-
WBS: R-000298-0005-4	
DRAWING SCALE	1/8" = 1'
CITY OF HOUSTON PM	IRAJ RANJBAR, P.E.
DWG NO. :	C-303
SHEET NO.	27 OF 147

PUBLIC WORKS AND ENGINEERING ACCEPTED & FILED
49061
CITY DRAWING NUMBER
HOUSTON, TEXAS

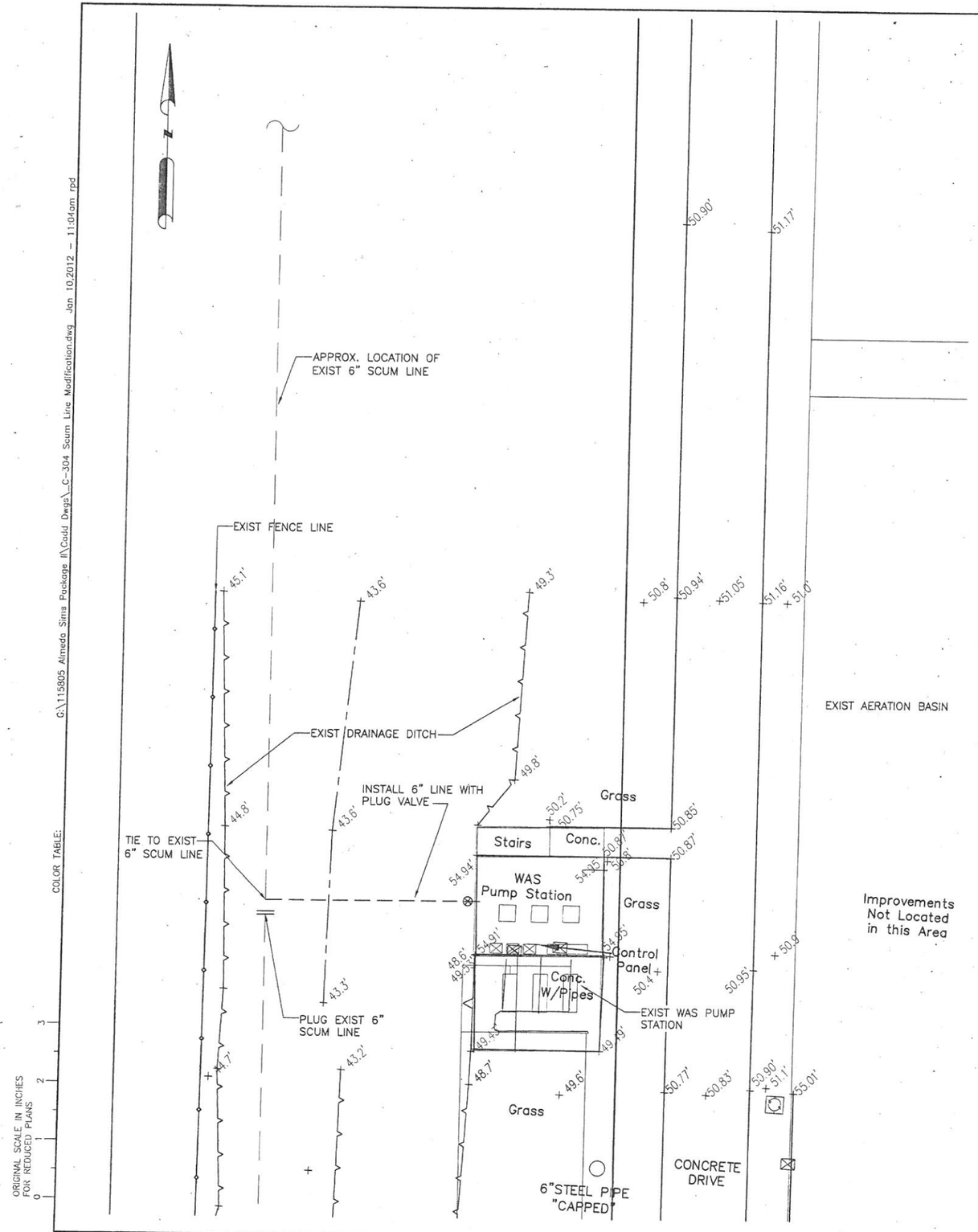

G:\115805 Almeda Sims Package II\Cadd Dwgs_C-304 Scum Line Modification.dwg Jan 10,2012 - 11:04am rpd

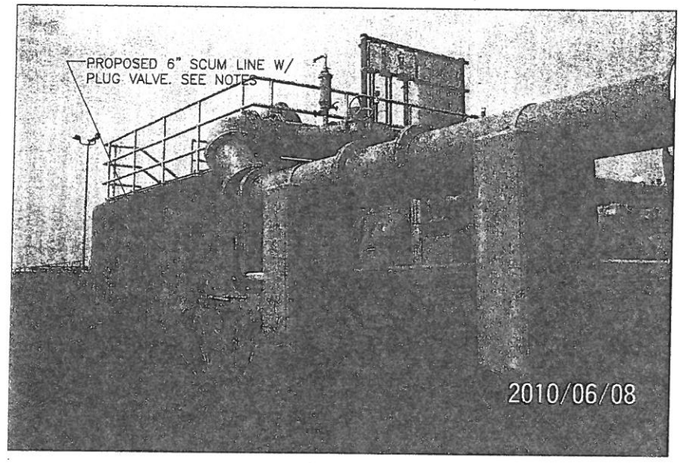

EXIST WAS PUMP STATION WEST ELEVATION

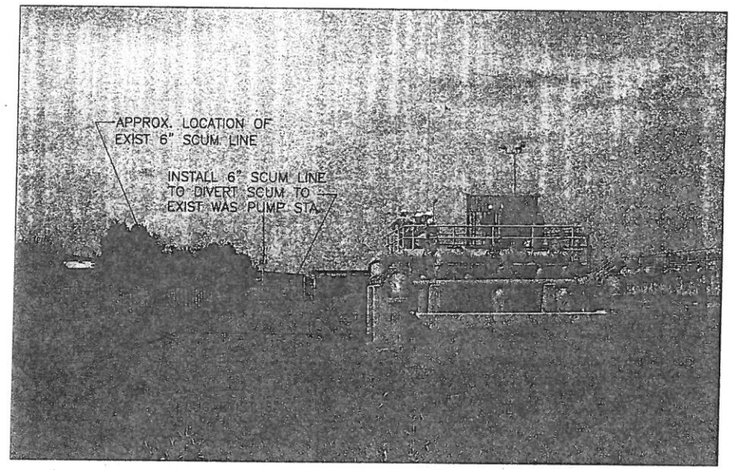

EXIST WAS PUMP STATION SOUTH ELEVATION

NOTES:

1. PIPING ROUTING IS SCHEMATIC IN NATURE AND SHALL BE ADJUSTED FOR FIELD CONDITIONS.
2. CONTRACTOR SHALL SAW CUT AND PLUG EXISTING 6" SCUM LINE.
3. INSTALL 6" SCUM PIPE (D.I.P.) WITH PLUG VALVE, WALL PENETRATION TO DIVERT CLARIFIER SCUM TO EXIST WAS PUMP STATION.
4. INSTALL WALL BRACKET PIPE SUPPORT.
5. CONTRACTOR SHALL RESTORE NATURAL GRADING OF THE DRAINAGE DITCH UP COMPLETION OF WORK.

TO ARRANGE FOR LINES TO BE TURNED OFF OR MOVED, CALL CENTERPOINT AT 713-207-7777.

PRIVATE UTILITY LINES SHOWN

AT LEAST 48 HOURS BEFORE EXCAVATING IN STREET R.O.W. OR EASEMENTS CALL THE LONE STAR NOTIFICATION 713-223-4567.

Date:

CenterPoint Energy/Electric Facilities
(Approved only for crossing underground ductlines, unless otherwise noted.)
Valid at time of review only.

Date:

SBC Approved for underground conduit facilities only.
Signature valid for one year.

Date:

CenterPoint Energy/Gas Facilities
(Gas service lines are not shown)

No.	Date	Revisions	App.

STATE OF TEXAS
LI CHUNG CHEN
98576
REGISTERED PROFESSIONAL ENGINEER
1-9-2012

Binkley & Barfield, Inc
consulting engineers
Texas Registration Number F-257
1710 Seamist Drive
Houston, Texas 77008-3189
(713) 869-3433

SURVEYED BY: AMANI ENG. | FIELD BOOK NO. : P-5486

CITY OF HOUSTON
DEPARTMENT OF PUBLIC WORKS AND ENGINEERING

ALMEDA SIMS WWTP & SPF IMPROVEMENTS PACKAGE II

EXISTING SCUM LINE MODIFICATION PLAN

FILE NO:	-
WBS: R-000298-0005-4	
DRAWING SCALE	AS SHOWN
CITY OF HOUSTON PM	IRAJ RANJBAR, P.E.
DWG NO. :	C-304
SHEET NO.	28 OF 147

PUBLIC WORKS AND ENGINEERING
ACCEPTED & FILED
49061-
CITY DRAWING NUMBER
HOUSTON, TEXAS

G:\115805 Almeda Sims Package II\Cadd Dwgs_I-100 INSTRUMENTATION LEGEND.dwg Sep 21,2011 - 11:16am RPD
ENVIRO-RD.ctb
COLOR TABLE:
ORIGINAL SCALE IN INCHES FOR REDUCED PLANS
0 1 2 3

INSTRUMENT IDENTIFICATION EXAMPLE SYMBOLS

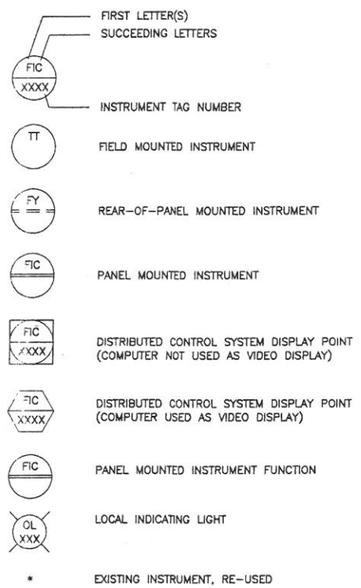

VALVE SYMBOLS

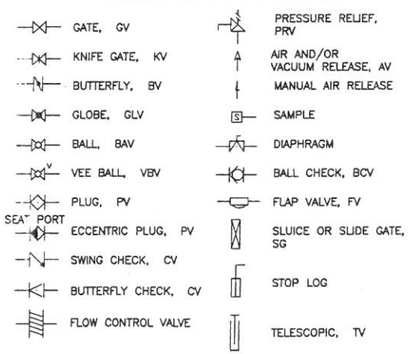

ACTUATOR SYMBOLS

NOTE: ON LOSS OF PRIMARY POWER, XX DENOTES –
FO, FAIL OPEN
FC, FAIL CLOSED
FLP, FAIL TO LAST POSITION

ANALYZER IDENTIFICATION

CL_2	CHLORINE GAS
CL RES	CHLORINE RESIDUAL
CL	TOTAL CHLORINE
NH_3	AMMONIA
pH	pH

EXAMPLE: AE CL_2

TRANSDUCERS IDENTIFICATION

E	VOLTAGE	M	SUM
I	CURRENT	P	PNEUMATIC
F	PULSE FREQUENCY		

EXAMPLE: FY I/F — CURRENT TO FREQUENCY TRANSDUCER

INTERFACE SYMBOLS

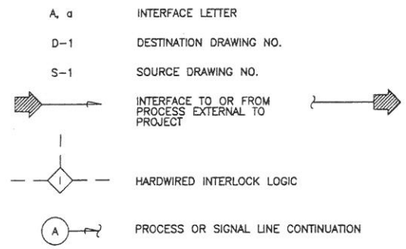

ABBREVIATIONS & LETTER SYMBOLS

AC	ALTERNATING CURRENT	NO	NORMALLY OPEN
CL	CLOSE	OC	OPEN-CLOSE
DC	DIRECT CURRENT	OCA	OPEN-CLOSE-AUTO
FR	FORWARD-REVERSE	OCR	OPEN-CLOSE-REMOTE
HOA	HAND-OFF-AUTO	OCS	OPEN-CLOSE-STOP
HOR	HAND-OFF-REMOTE	OO	ON-OFF (MAINTAINED)
LOS	LOCKOUT STOP	OOA	ON-OFF-AUTO
LOR	LOCAL-OFF-REMOTE	OOR	ON-OFF-REMOTE
MA	MANUAL-AUTO	OP	OPEN
MCC-X	MOTOR CONTROL CENTER NO. X	SS	START-STOP (MOMENTARY)
NC	NORMALLY CLOSED	TS	TEST START

FLOW STREAM IDENTIFICATION

CA	CAUSTIC SOLUTION
CL	CHLORINE GAS
CLS	CHLORINE SOLUTION
D	DIESEL
NPW	NONPOTABLE WATER
OF	OVERFLOW
PD	PLANT DRAIN
SW	SURFACE WATER
W	WATER
WW	WELL WATER

PRIMARY ELEMENT SYMBOLS

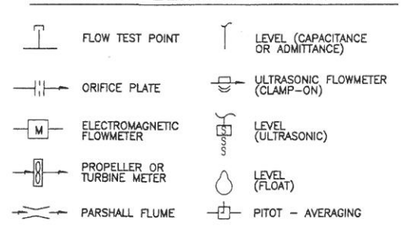

MISCELLANEOUS SYMBOLS

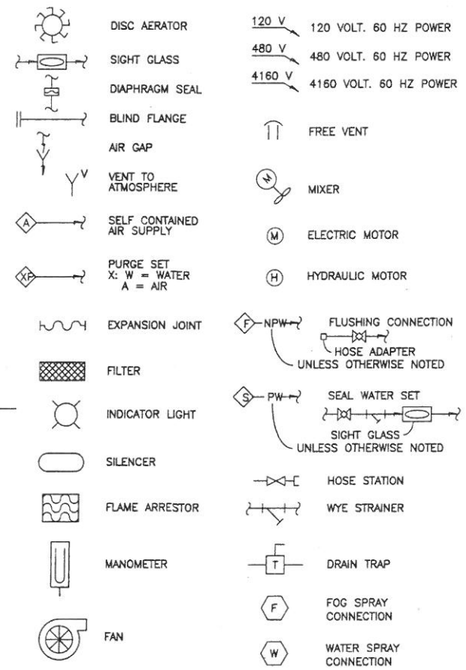

PUMP & COMPRESSOR SYMBOLS

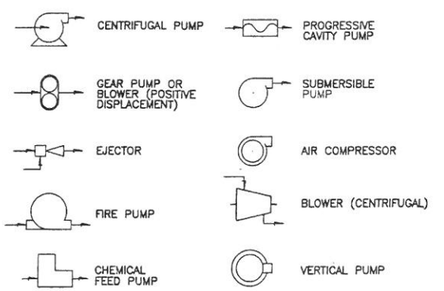

INSTRUMENT IDENTIFICATION LETTERS

	FIRST LETTERS		SUCCEEDING LETTERS		
	MEASURING OR INITIATING VARIABLE	MODIFIER	READOUT OR PASSIVE FUNCTION	OUTPUT FUNCTION	MODIFIER
A	ANALYSIS (+)		ALARM		
B	BURNER, COMBUSTION				
C				CONTROL	
D		DIFFERENTIAL			
E	VOLTAGE		SENSOR (PRIMARY ELEMENT)		
F	FLOW RATE	RATIO (FRACTION)			
G		GAUGE	GLASS, VIEWING DEVICE		
H	HAND				HIGH
I	CURRENT (ELECTRICAL)		INDICATE		
J	POWER	SCAN			
K	TIME, TIME SCHEDULE	TIME RATE OF CHANGE		CONTROL STATION	
L	LEVEL		LIGHT		LOW
M	CHLORINATION	MOMENTARY			MIDDLE, INTERMEDIATE
N	DECHLORINATION				
O			ORIFICE, RESTRICTION		
P	PRESSURE,		POINT (TEST) CONNECTION		
Q	QUANTITY	INTEGRATE, TOTALIZE			
R	RADIATION		RECORD		
S	SPEED, FREQUENCY	SAFETY		SWITCH	
T	TEMPERATURE			TRANSMIT	
U	MULTIVARIABLE		MULTI-FUNCTION	MULTI-FUNCTION	MULTI-FUNCTION
V	VIBRATION, MECHANICAL ANALYSIS			VALVE, DAMPER, LOUVER	
W	WEIGHT, FORCE		WELL		
X	UNCLASSIFIED	X AXIS	UNCLASSIFIED	UNCLASSIFIED	UNCLASSIFIED
Y	EVENT, STATE OR PRESENCE	Y AXIS		RELAY, COMPUTE, CONVERT	
Z	POSITION, DIMENSION	Z AXIS		DRIVER, ACTUATOR, UNCLASSIFIED FINAL CONTROL ELEMENT	

(+)WHEN USED, EXPLANATION IS SHOWN ADJACENT TO INSTRUMENT SYMBOL. SEE ABBREVIATIONS AND LETTER SYMBOL

GENERAL NOTES

1. COMPONENTS AND PANELS TO BE FURNISHED BY AN EQUIPMENT SUPPLIER ARE DESIGNATED ON INDIVIDUAL SHEETS. THESE INSTRUMENTS WILL BE INSTALLED BY CONTRACTOR.
2. ALL COMPONENTS AND PANELS NOT DESIGNATED AS FURNISHED BY AN EQUIPMENT SUPPLIER WILL BE FURNISHED AND SUPPLIED BY THE CONTRACTOR.
3. THIS IS A STANDARD LEGEND. NOT ALL OF THIS INFORMATION MAY BE USED ON THIS PROJECT.

LINE LEGEND

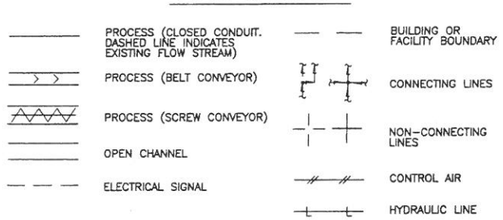

No.	Date	Revisions	App.

STATE OF TEXAS
DARRELL J. McADAMS
54522
LICENSED PROFESSIONAL ENGINEER
9-21-11

Binkley & Barfield, Inc
consulting engineers
Texas Registration Number F-257
1710 Seamist Drive
Houston, Texas 77008-3189
(713) 869-3433

SURVEYED BY: AMANI ENG. | FIELD BOOK NO. : P-5486

CITY OF HOUSTON
DEPARTMENT OF PUBLIC WORKS AND ENGINEERING

ALMEDA SIMS WWTP & SPF IMPROVEMENTS PACKAGE II

PROCESS AND INSTRUMENTATION DIAGRAM SYMBOLS

FILE NO:	–
WBS: R-000298-0005-4	
DRAWING SCALE	
NO SCALE	
CITY OF HOUSTON PM	
IRAJ RANJBAR, P.E.	
DWG NO. :	I-100
SHEET NO.	42 OF 147

PUBLIC WORKS AND ENGINEERING
ACCEPTED & FILED
49061
CITY DRAWING NUMBER
HOUSTON, TEXAS

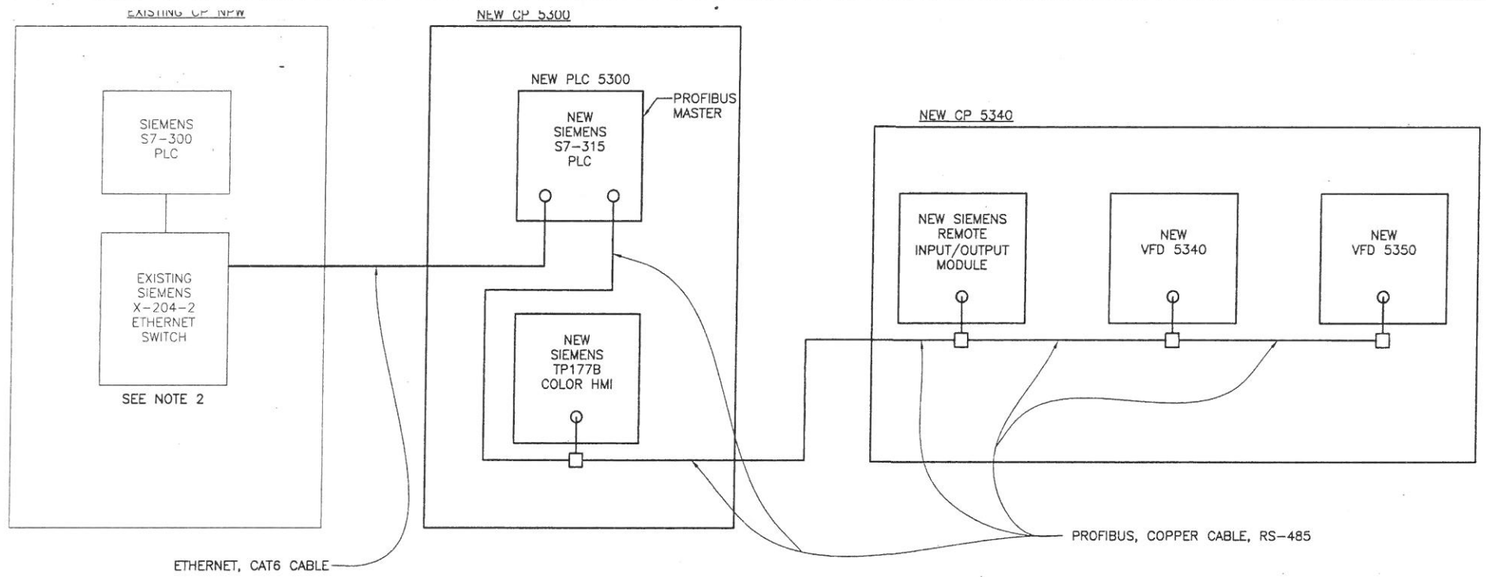

NEW STRAINER BACK FLUSH
NON-POTABLE WATER (NPW) SYSTEM

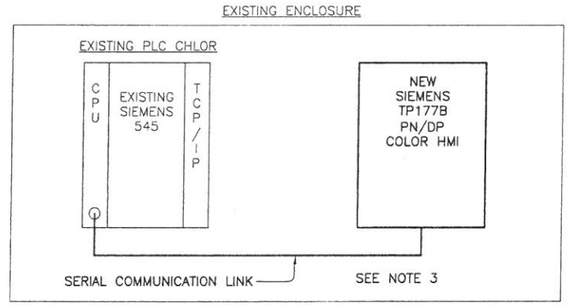

EXISTING CHLORINATION BUILDING

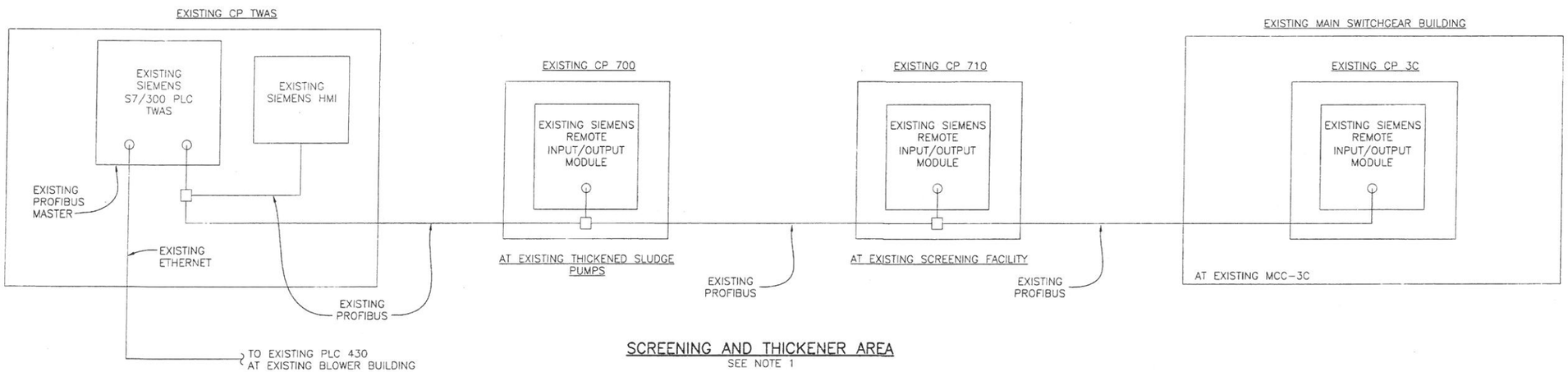

SCREENING AND THICKENER AREA
SEE NOTE 1

LEGEND:

HMI – HUMAN/MACHINE/INTERFACE
T/R – TRANSMIT/RECEIVE
LAN – LOCAL AREA NETWORK
VFD – VARIABLE FREQUENCY DRIVE
I/O – INPUT/OUTPUT
NPW – NON-POTABLE WATER

NOTES:

1. MODIFICATIONS ARE REQUIRED FOR THE EXISTING PROFIBUS DAISY-CHAIN THAT HAS EXISTING PLC TWAS AS THE PROFIBUS MASTER. THESE MODIFICATIONS ARE REQUIRED BECAUSE OF THE ADDITIONS OF THE NEW ROTARY SCREEN RS-730 WITH NEW INFLUENT VALVE FV 731, AND NEW CP 810 AT THE NEW THICKENER MECHANISM.
2. CONNECT NEW PLC 5300 AT NEW CP 5300 TO A SPARE COPPER PORT AT THE EXISTING SIEMENS X-204-2 ETHERNET SWITCH AT EXISTING CP NPW.
3. REPLACE EXISTING NEMATRON HMI WITH NEW SIEMENS TP177B PN/DP COLOR HMI. EXISTING HMI SHALL BECOME THE PROPERTY OF THE CITY.
4. AS PER CITY OF HOUSTON ELECTRICAL CODE, ALL PANELS SHALL BE UL LISTED AS AN ASSEMBLY. ALL COMPONENTS SHALL BE LISTED.

No.	Date	Revisions	Appr.

STATE OF TEXAS
DARRELL J. McADAMS
54522
LICENSED
PROFESSIONAL ENGINEER
9-21-11

Binkley & Barfield, Inc
consulting engineers
Texas Registration Number F-257
1710 Seamist Drive
Houston, Texas 77008-3189
(713) 869-3433

SURVEYED BY: AMANI ENG. | FIELD BOOK NO. : P-5486

CITY OF HOUSTON
DEPARTMENT OF PUBLIC WORKS AND ENGINEERING

ALMEDA SIMS WWTP & SPF IMPROVEMENTS PACKAGE II

SCADA NETWORK SCHEMATIC

FILE NO:	–
WBS: R-000298-0005-4	
DRAWING SCALE	
NO SCALE	
CITY OF HOUSTON PM	
IRAJ RANJBAR, P.E.	
DWG NO. :	I-101
SHEET NO.	43 OF 147

PUBLIC WORKS AND ENGINEERING
ACCEPTED & FILED
49061
CITY DRAWING NUMBER
HOUSTON, TEXAS

G:\115805 Almeda Sims Package II\Cadd Dwgs_I-101 SCADA SCHEM.dwg Sep 21,2011 - 11:18am KPD

COLOR TABLE:

ORIGINAL SCALE IN INCHES FOR REDUCED PLANS
0 1 2 3

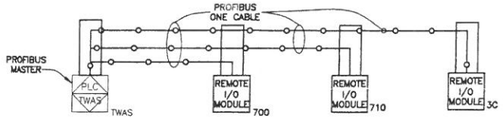

EXISTING PROFIBUS LAYOUT (PLC TWAS)
SEE SCADA NETWORK SCHEMATIC I-101
EXISTING CP TWAS HMI IS NOT SHOWN

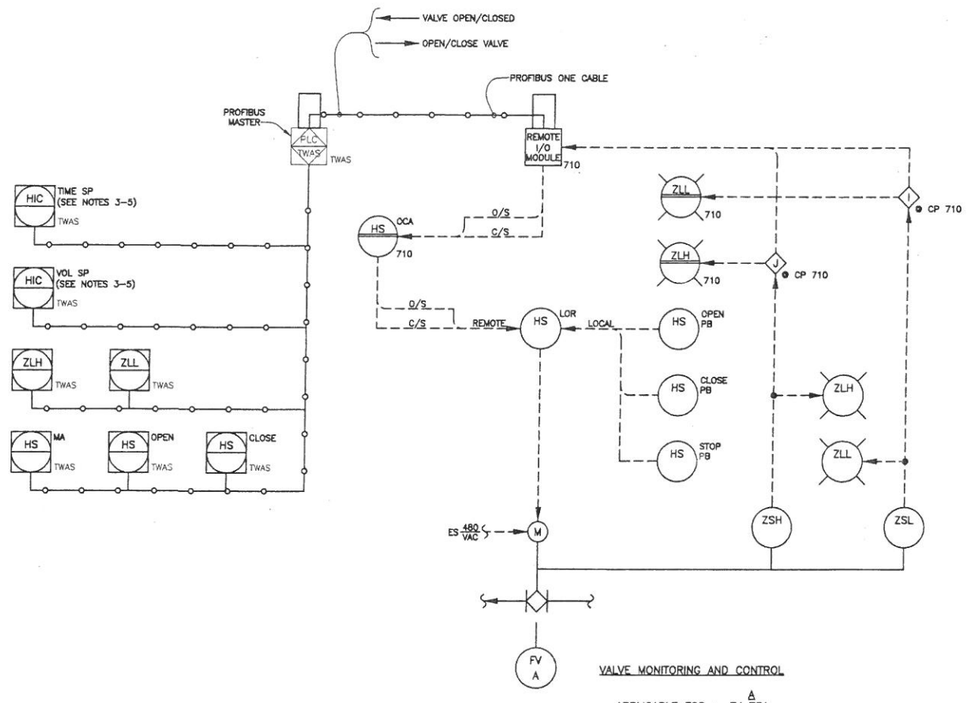

VALVE MONITORING AND CONTROL

APPLICABLE FOR : FV 731

LEGEND:

I/O – INPUT/OUTPUT
HMI – HUMAN/MACHINE/INTERFACE
MCC – MOTOR CONTROL CENTER
LAN – LOCAL AREA NETWORK
PB – PUSHBUTTON
RS – ROTARY SCREEN
BC – BELT CONVEYOR
S/S – START/STOP
SP – SETPOINT
LOR – LOCAL/OFF/REMOTE
MA – MANUAL/AUTO
OCA – OPEN/CLOSE/AUTO
O/S – OPEN/STOP
C/S – CLOSE/STOP

NOTES:

1. COMMUNICATION BETWEEN THE EXISTING REMOTE I/O MODULE AT EXISTING CP 710 AND THE MCC's IS ROUTED THROUGH EXISTING PLC TWAS AT EXISTING CP TWAS.

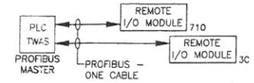

2. SINGLE HORIZONTAL LINE IS SHOWN. DOUBLE HORIZONTAL LINES MAY BE APPLICABLE FOR SOME CONTROL PANELS.
3. REFER TO SPECIFICATION SECTION 13440 FOR DESCRIPTION OF TIME AND VOLUME SETPOINTS. INCORPORATE NEW ROTARY SCREEN RS-730 AND NEW INFLUENT VALVE FV 731 INTO WAS PUMP CONTROL SYSTEM.
4. WAS PUMPS ARE INTERLOCKED WITH SCREENING FACILITIES EQUIPMENT. WAS PUMP SCHEDULE IS NOT SHOWN. REFER TO SPECIFICATION SECTION 13440.
5. PERMISSIVES MUST BE CONFIRMED BEFORE ANY WAS PUMP CAN BE STARTED, INCLUDING INFLUENT VALVES, ROTARY SCREENS, BELT CONVEYOR, ETC. REFER TO SPECIFICATION SECTION 13440.

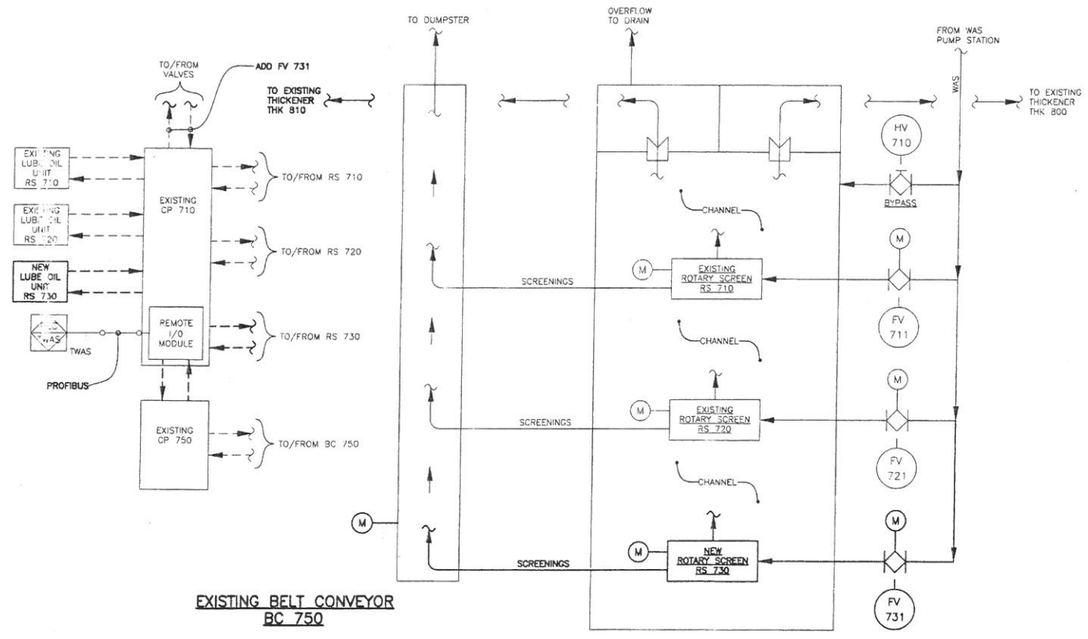

EXISTING BELT CONVEYOR BC 750

WAS ROTARY SCREENS

EXISTING SCREENING FACILITIES LAYOUT

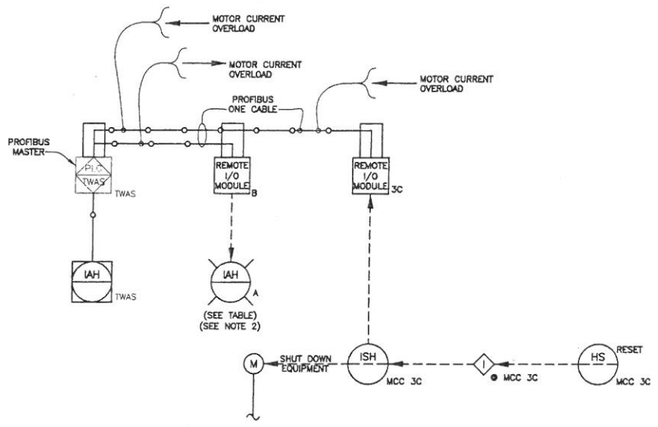

MOTOR CURRENT OVERLOAD ALARMS AT MCC 3C

APPLICABLE FOR:		CP A IAH LIGHT	AT CP B
	RS 730	CP 710	CP 710
	THK 810*	CP 810	CP 700

* REFER TO APPLICABLE P&IDs

No.	Date	Revisions	App.

STATE OF TEXAS
DARRELL J. McADAMS
54522
LICENSED
PROFESSIONAL ENGINEER
9-21-11

Binkley & Barfield, Inc
consulting engineers
Texas Registration Number F-257
1710 Seamist Drive
Houston, Texas 77008-3189
(713) 869-3433

SURVEYED BY: AMANI ENG. | FIELD BOOK NO. : P-5486

CITY OF HOUSTON
DEPARTMENT OF PUBLIC WORKS AND ENGINEERING

ALMEDA SIMS WWTP & SPF IMPROVEMENTS PACKAGE II

SCREENING FACILITIES LAYOUT P&ID

FILE NO:	–
WBS: R-000298-0005-4	
DRAWING SCALE	
NO SCALE	
CITY OF HOUSTON PM	
IRAJ RANJBAR, P.E.	
DWG NO. :	I-102
SHEET NO.	44 OF 147

ACCEPTED & FILED
49061
CITY DRAWING NUMBER
HOUSTON, TEXAS

G:\115805 Almeda Sims Package II\Cadd Dwgs_I-102 INF SCRN PID.dwg Sep 21,2011 - 11:20am RPD

COLOR TABLE:

ORIGINAL SCALE IN INCHES FOR REDUCED PLANS
0 1 2 3

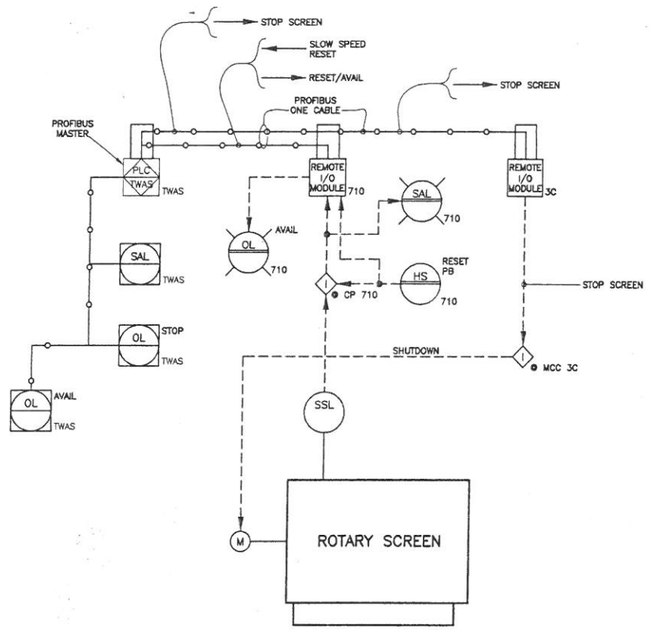

SLOW SPEED SWITCH ALARM

APPLICABLE FOR : RS 730

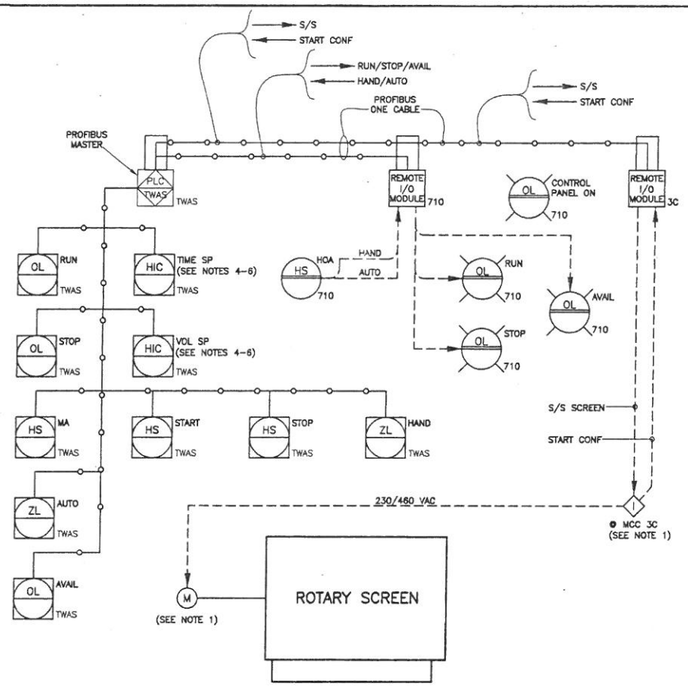

ROTARY SCREEN START/STOP (S/S) CONTROL

APPLICABLE FOR : RS 730

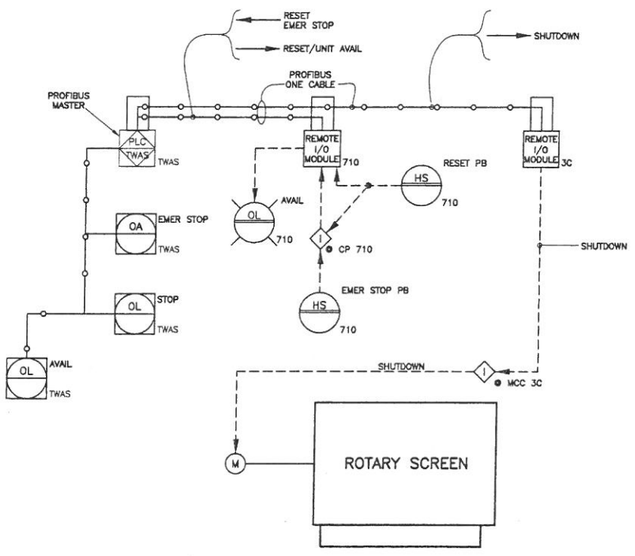

ROTARY SCREEN EMERGENCY STOP PBs

APPLICABLE FOR : RS 730

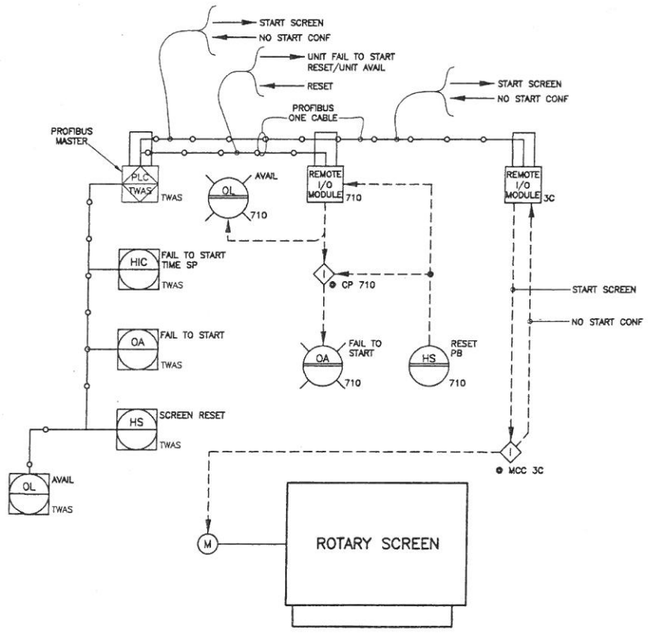

ROTARY SCREEN FAIL TO START ALARM

APPLICABLE FOR : RS 730

LEGEND:

I/O – INPUT/OUTPUT
HMI – HUMAN/MACHINE/INTERFACE
MCC – MOTOR CONTROL CENTER
LAN – LOCAL AREA NETWORK
PB – PUSHBUTTON
S/S – START/STOP
SP – SETPOINT
MA – MANUAL/AUTO
OCA – OPEN/CLOSE/AUTO
O/C – OPEN/CLOSE

NOTES:

1. THE MOTOR IS A TWO SPEED MOTOR WITH HIGH AND LOW SPEEDS. THE MOTOR SHALL BE MANUALLY WIRED FOR EITHER HIGH OR LOW SPEED.
2. ONE SPRAY WATER HEADER IS INTERNAL TO THE SCREEN. THE OTHER SPRAY WATER HEADER IS EXTERNAL.
3. ACCESSORIES FOR SPRAY WASH SYSTEMS SUCH AS PRESSURE REDUCING VALVES, BLOCK VALVES, ETC, ARE NOT SHOWN. REFER TO APPLICABLE SPECIFICATION SECTIONS.
4. REFER TO SPECIFICATION SECTION 13440 FOR DESCRIPTION OF TIME AND VOLUME SETPOINTS.
5. WAS PUMPS ARE INTERLOCKED WITH SCREENING FACILITIES EQUIPMENT. WAS PUMP SCHEDULE IS NOT SHOWN. REFER TO SPECIFICATION SECTION 13440.
6. PERMISSIVES MUST BE CONFIRMED BEFORE ANY WAS PUMP CAN BE STARTED, INCLUDING INFLUENT VALVES, ROTARY SCREENS, BELT CONVEYOR, ETC. REFER TO SPECIFICATION SECTION 13440.
7. REFER TO DWG I-102 FOR MOTOR CURRENT OVERLOAD ALARM.

No.	Date	Revisions	App.

STATE OF TEXAS
DARRELL J. McADAMS
54522
LICENSED PROFESSIONAL ENGINEER
9-21-11

Binkley & Barfield, Inc
consulting engineers
Texas Registration Number F-257
1710 Seamist Drive
Houston, Texas 77008-3189
(713) 869-7433

SURVEYED BY: AMANI ENG. | FIELD BOOK NO. : P-5486

CITY OF HOUSTON
DEPARTMENT OF PUBLIC WORKS AND ENGINEERING

ALMEDA SIMS WWTP & SPF IMPROVEMENTS PACKAGE II

ROTARY SCREEN DETAILS P&ID (1 OF 2)

FILE NO:	–
WBS: R-000298-0005-4	
DRAWING SCALE	NO SCALE
CITY OF HOUSTON PM	IRAJ RANJBAR, P.E.
DWG NO. :	I-103
SHEET NO. 45 OF 147	

PUBLIC WORKS AND ENGINEERING ACCEPTED & FILED
49061
CITY DRAWING NUMBER
HOUSTON, TEXAS

G:\115805 Almeda Sims Package II\Cadd Dwgs_I-103 Rotary Screens PID.dwg Sep 21,2011 - 11:21am RPD
COLOR TABLE:
ORIGINAL SCALE IN INCHES FOR REDUCED PLANS
0 1 2 3

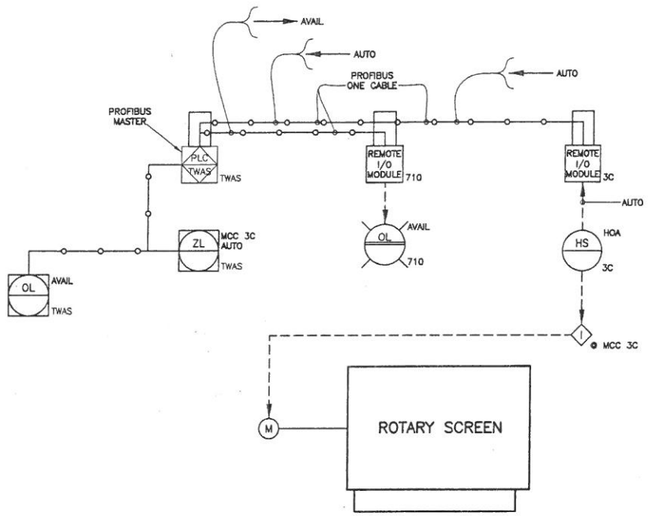

MCC 3C HOA HAND SWITCHES

APPLICABLE FOR : RS 730

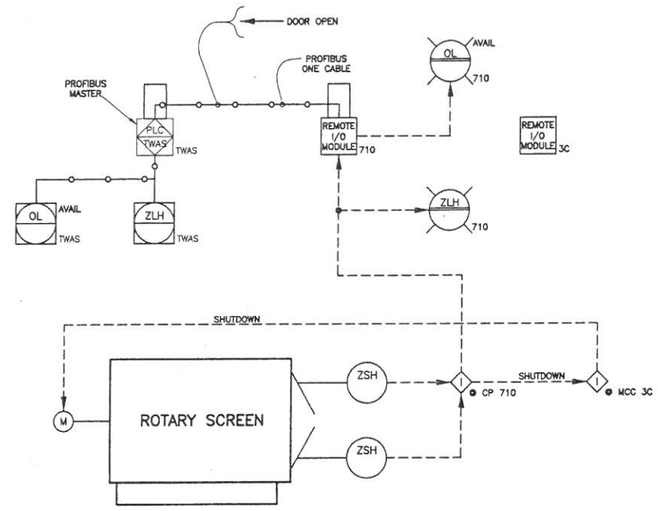

ROTARY SCREEN DOOR POSITION SWITCHES

APPLICABLE FOR : RS 730

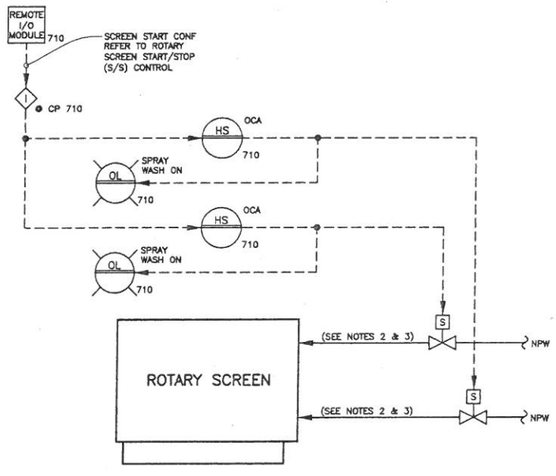

WASHWATER CONTROL

APPLICABLE FOR : RS 730

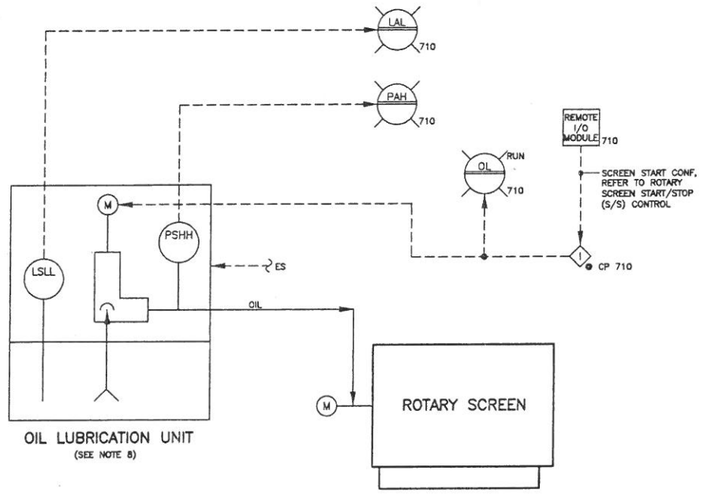

ROTARY SCREEN OIL LUBRICATION UNITS

APPLICABLE FOR : RS 730

LEGEND:

I/O – INPUT/OUTPUT
HMI – HUMAN/MACHINE/INTERFACE
MCC – MOTOR CONTROL CENTER
LAN – LOCAL AREA NETWORK
PB – PUSHBUTTON
S/S – START/STOP
SP – SETPOINT
MA – MANUAL/AUTO
OCA – OPEN/CLOSE/AUTO
O/C – OPEN/CLOSE

NOTES:

1. THE MOTOR IS A TWO SPEED MOTOR WITH HIGH AND LOW SPEEDS. THE MOTOR SHALL BE MANUALLY WIRED FOR EITHER HIGH OR LOW SPEED.
2. ONE SPRAY WATER HEADER IS INTERNAL TO THE SCREEN. THE OTHER SPRAY WATER HEADER IS EXTERNAL.
3. ACCESSORIES FOR SPRAY WASH SYSTEMS SUCH AS PRESSURE REDUCING VALVES, BLOCK VALVES, ETC, ARE NOT SHOWN. REFER TO APPLICABLE SPECIFICATION SECTIONS.
4. REFER TO SPECIFICATION SECTION 13440 FOR DESCRIPTION OF TIME AND VOLUME SETPOINTS.
5. WAS PUMPS ARE INTERLOCKED WITH SCREENING FACILITIES EQUIPMENT. WAS PUMP SCHEDULE IS NOT SHOWN. REFER TO SPECIFICATION SECTION 13440.
6. PERMISSIVES MUST BE CONFIRMED BEFORE ANY WAS PUMP CAN BE STARTED, INCLUDING INFLUENT VALVES, ROTARY SCREENS, BELT CONVEYOR, ETC. REFER TO SPECIFICATION SECTION 13440.
7. REFER TO DWG I-102 FOR MOTOR CURRENT OVERLOAD ALARM.
8. REFER TO MECHANICAL DRAWINGS AND OTHER APPLICABLE DRAWINGS FOR PHYSICAL LOCATIONS OF OIL LUBRICATION UNITS.

No.	Date	Revisions	App.

STATE OF TEXAS
DARRELL J. McADAMS
54522
LICENSED
PROFESSIONAL ENGINEER
9-21-11

Binkley & Barfield, Inc
consulting engineers
Texas Registration Number F-257
1710 Seamist Drive
Houston, Texas 77008-3189
(713) 869-3433

SURVEYED BY: AMANI ENG. | FIELD BOOK NO. : P-5486

CITY OF HOUSTON
DEPARTMENT OF PUBLIC WORKS AND ENGINEERING

ALMEDA SIMS WWTP & SPF IMPROVEMENTS PACKAGE II

ROTARY SCREEN DETAILS P&ID (2 OF 2)

FILE NO:	–
WBS: R-000298-0005-4	
DRAWING SCALE	
NO SCALE	
CITY OF HOUSTON PM	
IRAJ RANJBAR, P.E.	
DWG NO. :	I-104
SHEET NO.	46 OF 147

PUBLIC WORKS AND ENGINEERING
ACCEPTED & FILED
49061
CITY DRAWING NUMBER
HOUSTON, TEXAS

G:\115805 Almeda Sims Package II\Cadd Dwgs\I-104 Rotary Screens PID.dwg Sep 21,2011 - 11:22am RPD
COLOR TABLE:
ORIGINAL SCALE IN INCHES FOR REDUCED PLANS
0 1 2 3

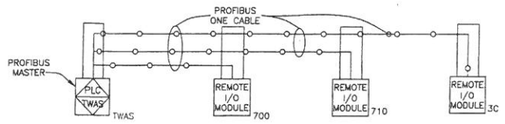

EXISTING PROFIBUS LAYOUT (PLC TWAS)

SEE SCADA NETWORK SCHEMATIC I-101
EXISTING CP TWAS HMI IS NOT SHOWN

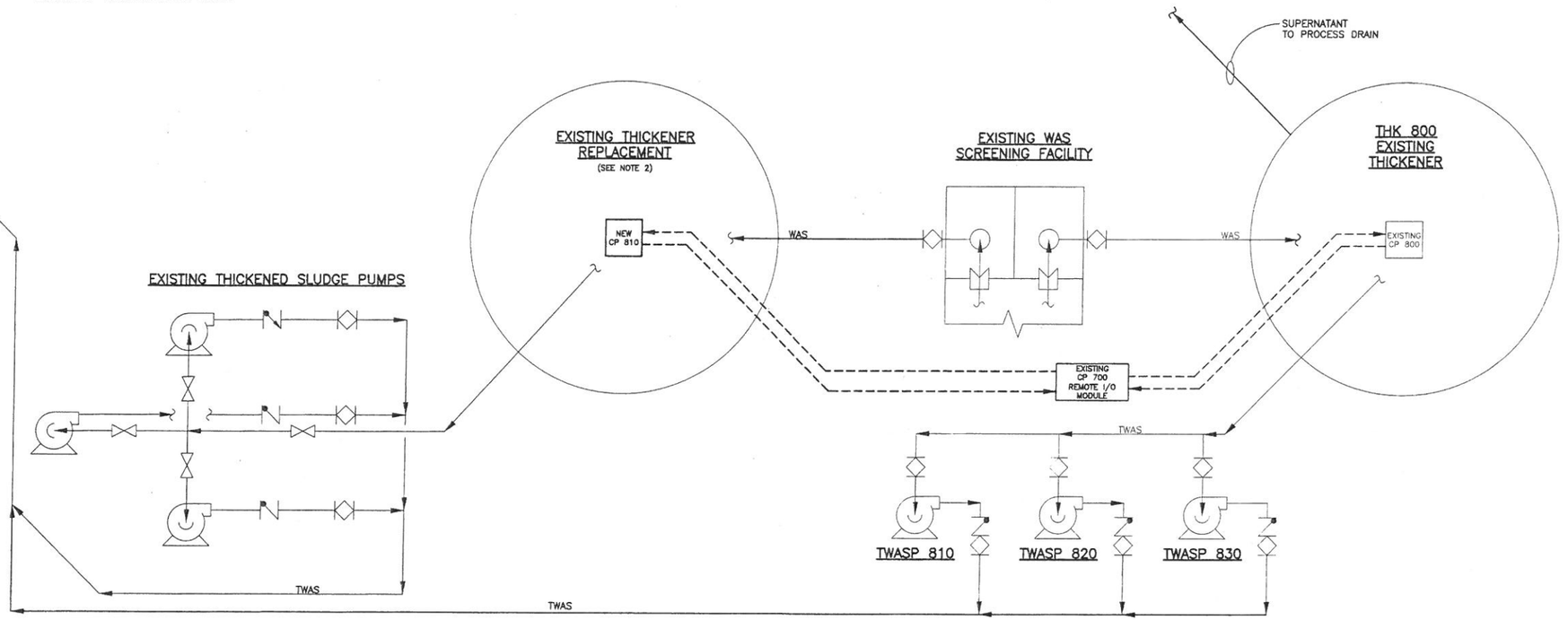

EXISTING THICKENED SLUDGE PUMPS

LEGEND:

I/O – INPUT/OUTPUT
MCC – MOTOR CONTROL CENTER

NOTES:

1. COMMUNICATION BETWEEN THE EXISTING REMOTE I/O MODULE AT EXISTING CP 700 AND THE MCCs IS ROUTED THROUGH EXISTING PLC TWAS AT CP TWAS.

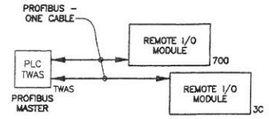

2. A NEW THICKENER MECHANISM SHALL BE INSTALLED IN THE EXISTING THICKENER, COMPLETE WITH DRIVES, CONTROLS, WASHWATER, ETC. REFER TO APPLICABLE DRAWINGS AND SPECIFICATION SECTIONS.

No.	Date	Revisions	App.

STATE OF TEXAS
DARRELL J. McADAMS
54522
LICENSED PROFESSIONAL ENGINEER
9-21-11

Binkley & Barfield, Inc
consulting engineers
Texas Registration Number F-257
1710 Seamist Drive
Houston, Texas 77008-3189
(713) 869-3433

SURVEYED BY: AMANI ENG. | FIELD BOOK NO. : P-5486

CITY OF HOUSTON
DEPARTMENT OF PUBLIC WORKS AND ENGINEERING

ALMEDA SIMS WWTP & SPF IMPROVEMENTS PACKAGE II

THICKENERS AND THICKENED SLUDGE PUMPS LAYOUT P&ID

FILE NO:	–
WBS: R-000298-0005-4	
DRAWING SCALE	
NO SCALE	
CITY OF HOUSTON PM	
IRAJ RANJBAR, P.E.	
DWG NO. :	I-105
SHEET NO. 47 OF 147	

PUBLIC WORKS AND ENGINEERING
ACCEPTED & FILED
49061
CITY DRAWING NUMBER
HOUSTON, TEXAS

G:\115805 Almeda Sims Package II\Cadd Dwgs_I-105 Thickener & Pumps.dwg Sep 21,2011 – 11:24am RPD

COLOR TABLE:

ORIGINAL SCALE IN INCHES FOR REDUCED PLANS
0 1 2 3

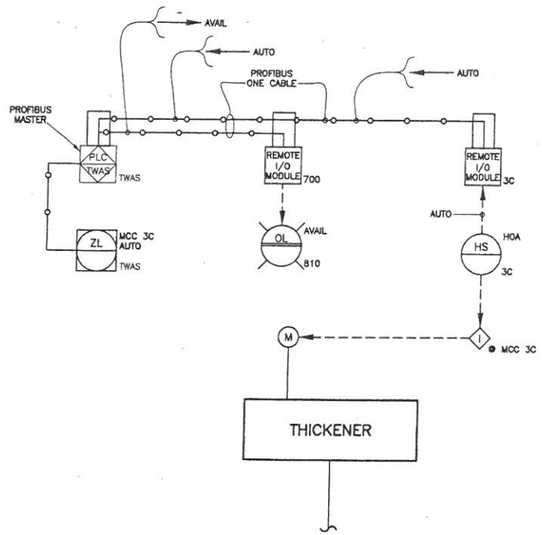

MCC 3C HOA HAND SWITCH

APPLICABLE FOR : EXISTING THICKENER WITH NEW MECHANISM

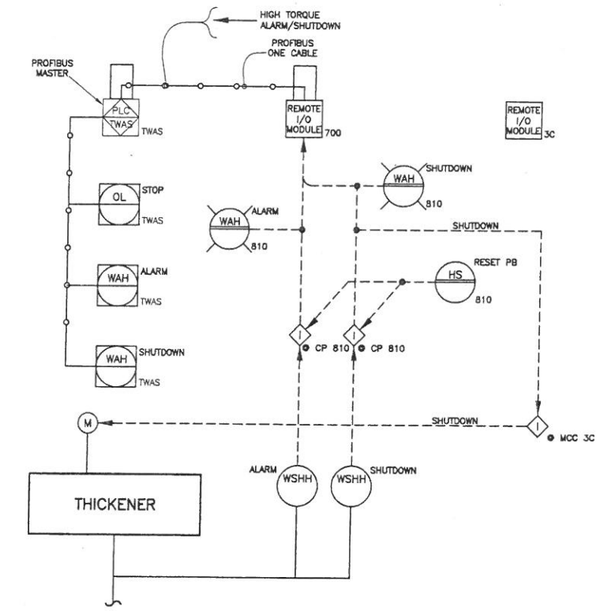

THICKENER TORQUE OVERLOAD ALARMS

APPLICABLE FOR : EXISTING THICKENER WITH NEW MECHANISM

LEGEND:

HMI – HUMAN/MACHINE/INTERFACE
PB – PUSHBUTTON
S/S – START/STOP
SP – SETPOINT

NOTES:

1. WASHWATER PIPING, VALVES, CONTROLS AND ACCESSORIES NOT SHOWN. REFER TO APPLICABLE SPECIFICATION SECTIONS.
2. START AND STOP PUSH BUTTONS ARE MOMENTARY CONTACT.
3. REFER TO DWG I-102 FOR MOTOR CURRENT OVERLOAD ALARM.
4. THE EXISTING THICKENER IS MANUALLY STARTED AND STOPPED, EITHER LOCALLY AT CP 810 OR REMOTELY. THE EXISTING THICKENER NORMALLY RUNS CONTINUOUSLY. REFER TO SPECIFICATION SECTION 13440.

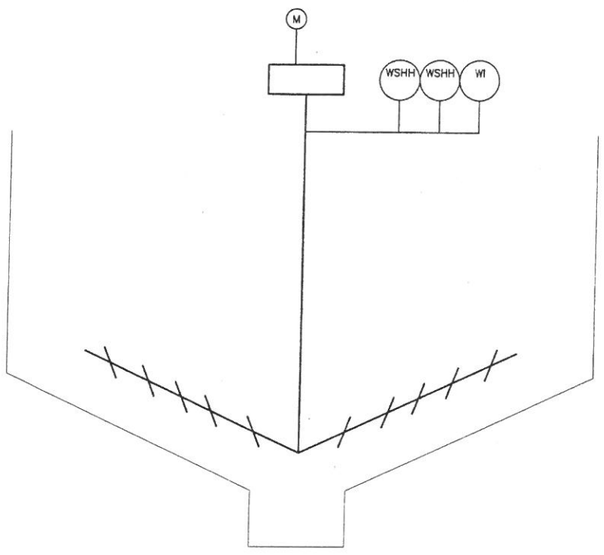

NEW THICKENER MECHANISM

APPLICABLE FOR : EXISTING THICKENER WITH NEW MECHANISM

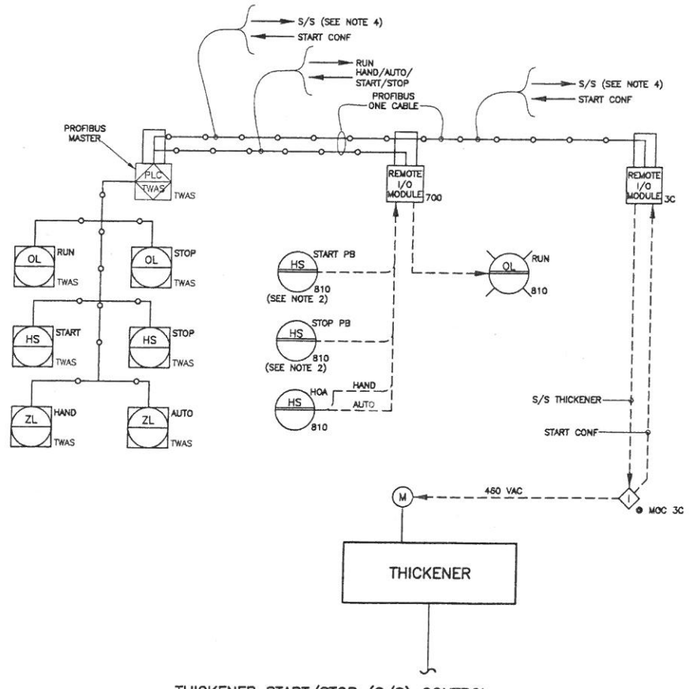

THICKENER START/STOP (S/S) CONTROL

APPLICABLE FOR : EXISTING THICKENER WITH NEW MECHANISM

No.	Date	Revisions	App.

STATE OF TEXAS
DARRELL J. McADAMS
54522
LICENSED
PROFESSIONAL ENGINEER
9-21-11

Binkley & Barfield, Inc
consulting engineers
Texas Registration Number F-257
1710 Seamist Drive
Houston, Texas 77008-3189
(713) 869-3433

SURVEYED BY: AMANI ENG. | FIELD BOOK NO. : P-5486

CITY OF HOUSTON
DEPARTMENT OF PUBLIC WORKS AND ENGINEERING

ALMEDA SIMS WWTP & SPF IMPROVEMENTS PACKAGE II

THICKENER DETAILS
P&ID

FILE NO:	–
WBS: R-000298-0005-4	
DRAWING SCALE	NO SCALE
CITY OF HOUSTON PM	IRAJ RANJBAR, P.E.
DWG NO. :	I-106
SHEET NO.	48 OF 147

PUBLIC WORKS AND ENGINEERING
ACCEPTED & FILED
49061
CITY DRAWING NUMBER
HOUSTON, TEXAS

ORIGINAL SCALE IN INCHES FOR REDUCED PLANS
0 1 2 3

COLOR TABLE:

G:\115805 Almeda Sims Package II\Cadd Dwgs_I-106 Thickener Details PID.dwg Sep 21,2011 - 11:25am RPD

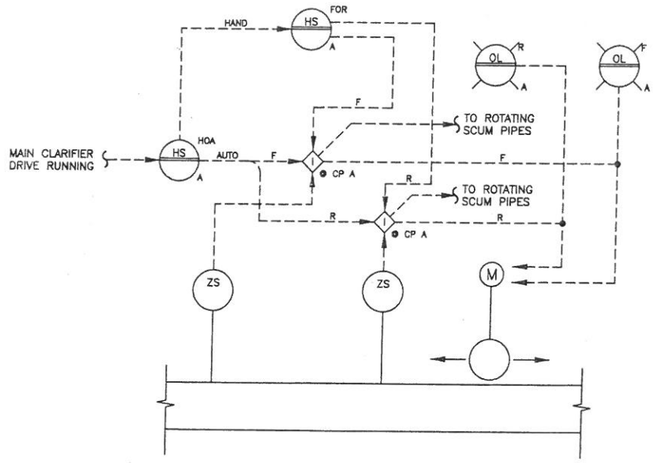

CLARIFIER SCUM DRIVE CONTROL

APPLICABLE FOR :	CL 510	CP 510
	CL 520	CP 520
	CL 530	CP 530

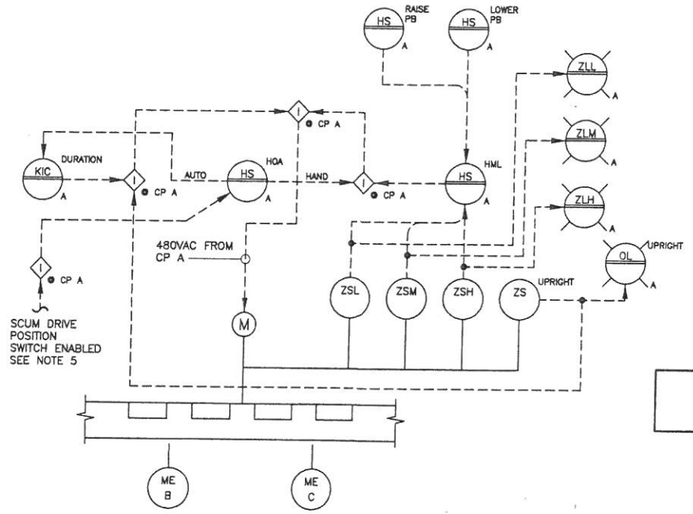

ROTATING SCUM PIPES

TWO PER CLARIFIER

APPLICABLE FOR :	CP A	ME B	ME C
CL 510	CP 510	ME 511	ME 512
CL 520	CP 520	ME 521	ME 522
CL 530	CP 530	ME 531	ME 532

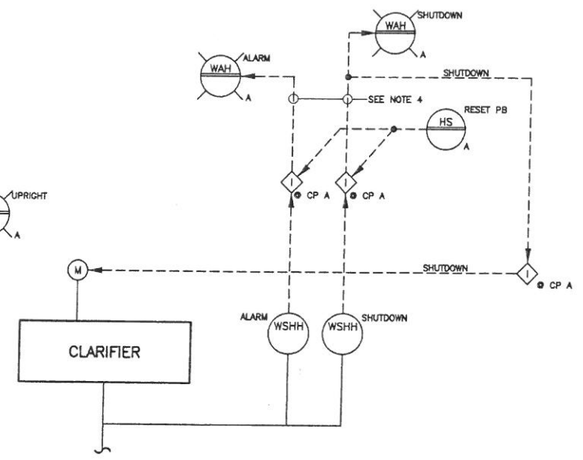

CLARIFIER TORQUE OVERLOAD ALARMS

APPLICABLE FOR :	CP A
CL 510	CP 510
CL 520	CP 520
CL 530	CP 530

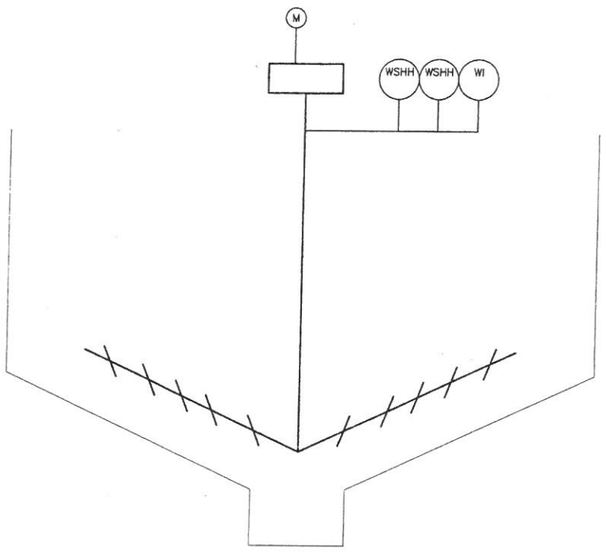

APPLICABLE FOR :	CL 510
	CL 520
	CL 530

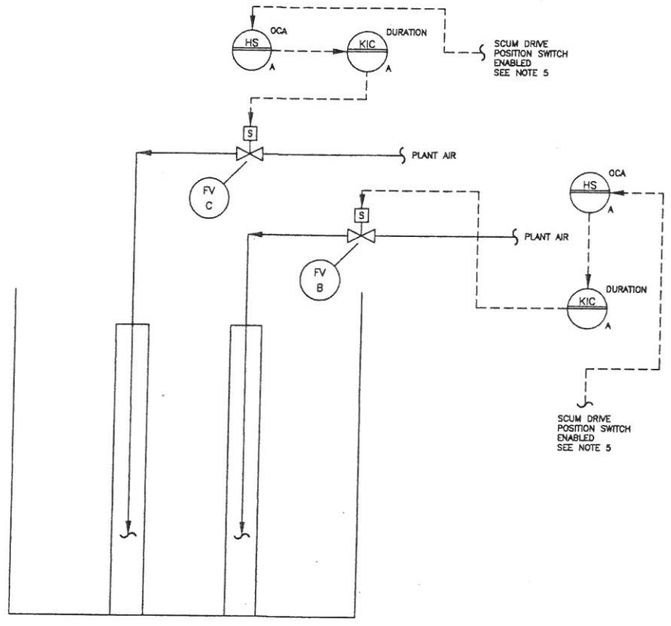

SCUM AIR-LIFT PUMPS

APPLICABLE FOR :	CP A	FV B	FV C
CL 510	CP 510	FV 511	FV 512
CL 520	CP 520	FV 521	FV 522
CL 530	CP 530	FV 531	FV 532

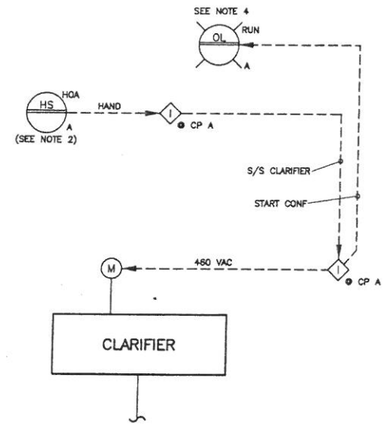

CLARIFIER START/STOP (S/S) CONTROL

APPLICABLE FOR :	CP A
CL 510	CP 510
CL 520	CP 520
CL 530	CP 530

LEGEND:

HMI – HUMAN/MACHINE/INTERFACE
PB – PUSHBUTTON
S/S – START/STOP
SP – SETPOINT
HML – HIGH/MIDDLE/LOW
OCA – OPEN/CLOSE/AUTO
FOR – FORWARD/OFF/REVERSE
HS – HAND SWITCH
F – FORWARD
R – REVERSE

NOTES:

1. WASHWATER PIPING, VALVES, CONTROLS AND ACCESSORIES NOT SHOWN. REFER TO APPLICABLE SPECIFICATION SECTIONS.
2. CLARIFIERS ARE MANUALLY STARTED AND STOPPED. CLARIFIERS ARE NORMALLY RUN CONTINUOUSLY. THE HOA HAND POSITION IS USED FOR NORMAL OPERATION. THE HOA AUTO POSITION IS FOR FUTURE USE.
3. POWER FOR SCUM DRIVE MOTORS IS PROVIDED BY LOCAL CONTROL PANELS.
4. EXISTING MONITORING OF CLARIFIERS SHALL BE MAINTAINED UNDER THIS CONTRACT.
5. AIR-LIFT PUMPS ARE PAIRED WITH TILTING SCUM PIPES, FV 511 WITH ME 511, ETC. REFER TO SPECIFICATION SECTION 11386

No.	Date	Revisions	App.

DARRELL J. McADAMS 54522 LICENSED PROFESSIONAL ENGINEER
9-21-11

Binkley & Barfield, Inc
consulting engineers
Texas Registration Number F-257
1710 Seamist Drive
Houston, Texas 77008-3189
(713) 869-3433

SURVEYED BY: AMANI ENG. FIELD BOOK NO. : P-5486

CITY OF HOUSTON
DEPARTMENT OF PUBLIC WORKS AND ENGINEERING

ALMEDA SIMS WWTP & SPF IMPROVEMENTS PACKAGE II

CLARIFIER DETAILS P&ID

FILE NO:	–
WBS: R-000298-0005-4	
DRAWING SCALE	NO SCALE
CITY OF HOUSTON PM	IRAJ RANJBAR, P.E.
DWG NO. :	I-107
SHEET NO.	49 OF 147

PUBLIC WORKS AND ENGINEERING ACCEPTED & FILED 49081 CITY DRAWING NUMBER HOUSTON, TEXAS

G:\115805 Almeda Sims Package II\Cadd Dwgs\I-107 Clarifier Details PID.dwg Sep 21,2011 - 11:26am RPD
COLOR TABLE:
ORIGINAL SCALE IN INCHES FOR REDUCED PLANS
0 1 2 3

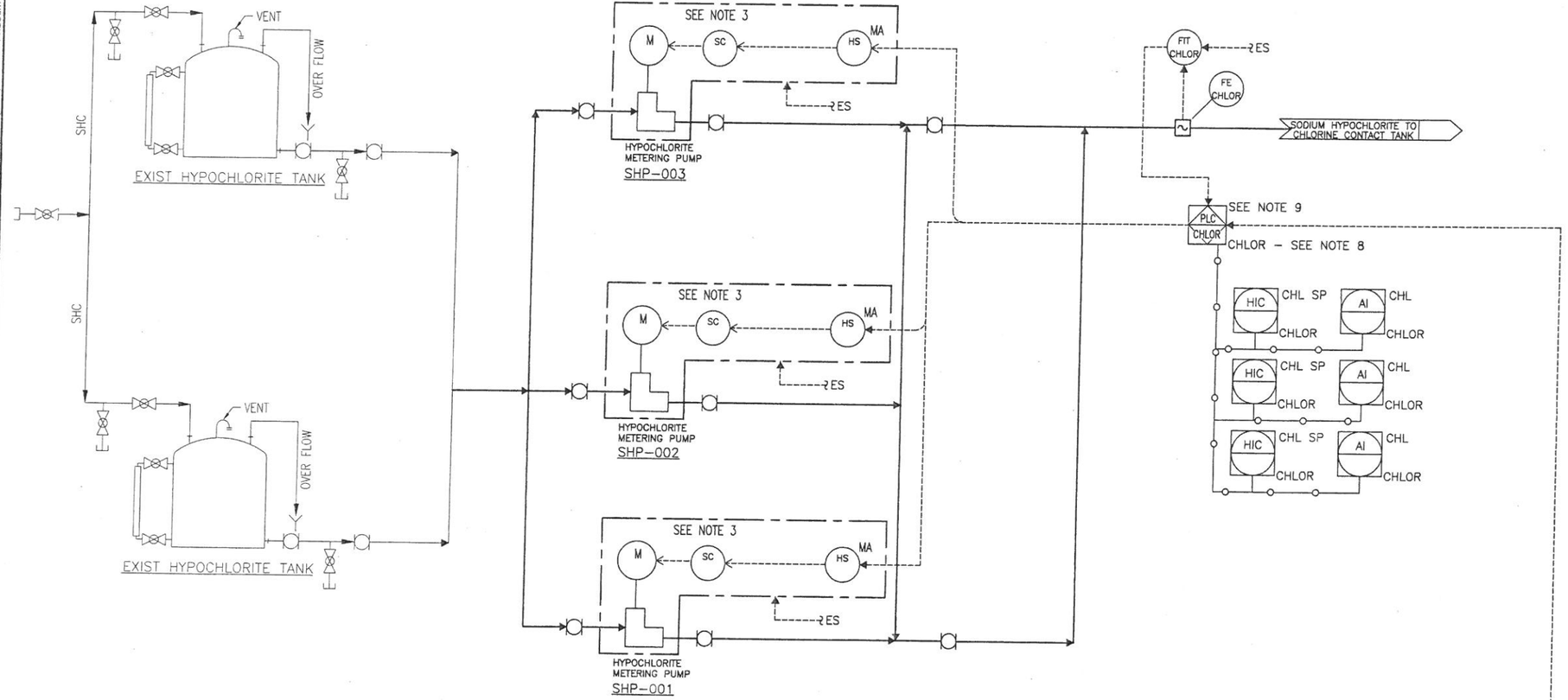

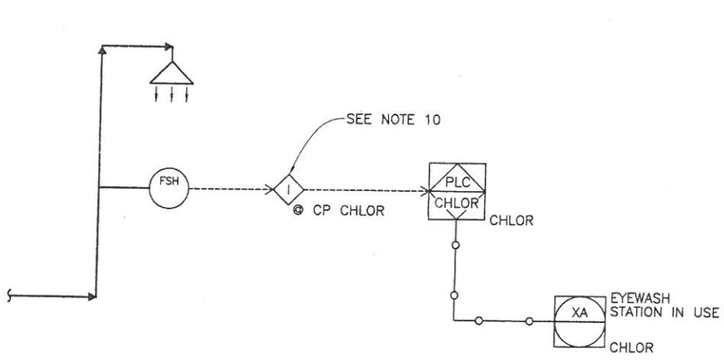

PROPOSED EYEWASH STATION IN USE ALARM

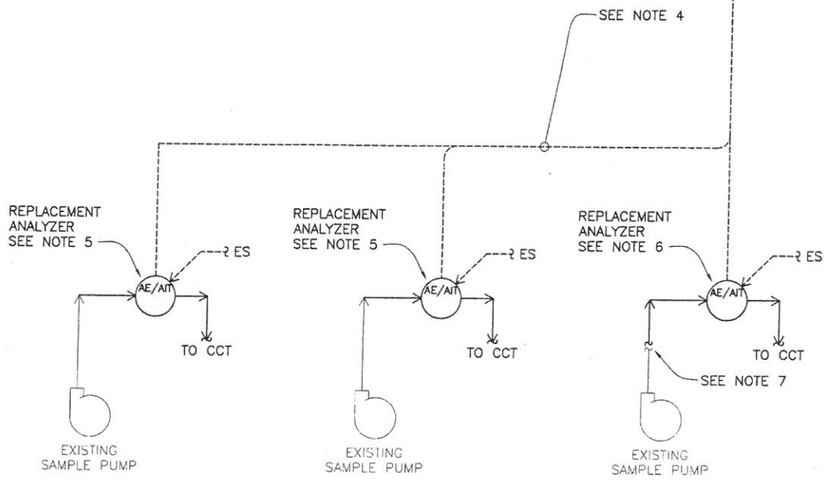

NOTES:

1. REFER TO DWG I–100 FOR INSTRUMENTATION SYMBOLS.

2. CCT – CHLORINE CONTACT TANK
   ST – STORAGE TANK
   OCA – OPEN/CLOSE/AUTO
   O/S – OPEN/STOP
   C/S – CLOSE/STOP
   O/C – OPEN/CLOSE
   I/O – INPUT/OUTPUT
   CHL – CHLORINE
   MA – MANUAL/AUTO
   HMI – HUMAN/MACHINE/INTERFACE
   AI – ANALOG INPUT
   AO – ANALOG OUTPUT

3. INTEGRAL CONTROL PANEL, REFER TO SPECIFICATION SECTIONS 11266 AND 13440.

4. REFER TO ELEC DRAWINGS FOR CONDUIT, WIRING, AND PLC ANALOG INPUT CHANNELS.

5. LOCATED IN EXISTING CHLORINATION BUILDING. REPLACE EXISTING UNITS.

6. LOCATED IN NEW SODIUM HYPOCHLORITE METERING PUMP BUILDING.

7. CONNECT EXISTING PUMP AND PIPE TO NEW PIPE. REFER TO MECHANICAL DRAWINGS AND OTHER APPLICABLE DRAWINGS.

8. THE EXISTING HMI SHALL BE REPLACED WITH A NEW SIEMENS TP177B–COLOR HMI

9. SOME AI AND AO I/O IS EXISTING, REUSE EXISTING AI/AO CHANNELS. USE SPARE AI/AO CHANNELS IF REQUIRED FOR ANY NEW I/O. PROVIDE NEW AI AND/OR AO MODULES IF REQUIRED FOR NEW AI/AO I/O.

10. EXISTING DI MODULES AND NEW DI MODULES, IF ANY, ARE 24 VDC. IF NECESSARY, PROVIDE ALL REQUIRED INTERPOSING RELAYS TO CONVERT SIGNAL VOLTAGE TO 24 VDC, SUITABLE FOR 24 VDC DI MODULES.

No.	Date	Revisions	App.

STATE OF TEXAS
DARRELL J. McADAMS
54522
LICENSED
PROFESSIONAL ENGINEER
9-21-11

Binkley & Barfield, Inc
consulting engineers
Texas Registration Number F-257
1710 Seamist Drive
Houston, Texas 77008-3139
(713) 869-3433

SURVEYED BY: AMANI ENG. FIELD BOOK NO. : P–5486

CITY OF HOUSTON
DEPARTMENT OF PUBLIC WORKS AND ENGINEERING

ALMEDA SIMS WWTP & SPF IMPROVEMENTS PACKAGE II

CHEMICAL DETAILS - SODIUM HYPOCHLORITE P&ID

FILE NO:	–
WBS: R–000298–0005–4	
DRAWING SCALE	
NO SCALE	
CITY OF HOUSTON PM	
IRAJ RANJBAR, P.E.	
DWG NO. :	I–108
SHEET NO.	50 OF 147

PUBLIC WORKS AND ENGINEERING
ACCEPTED & FILED
49061
CITY DRAWING NUMBER
HOUSTON, TEXAS

G:\115805 Almeda Sims Package II\Cadd Dwgs_I-108 Chemical Details - Sodium Hypochlorite P&ID.dwg Sep 21,2011 - 11:28am RPD
COLOR TABLE:
ORIGINAL SCALE IN INCHES FOR REDUCED PLANS
0 1 2 3

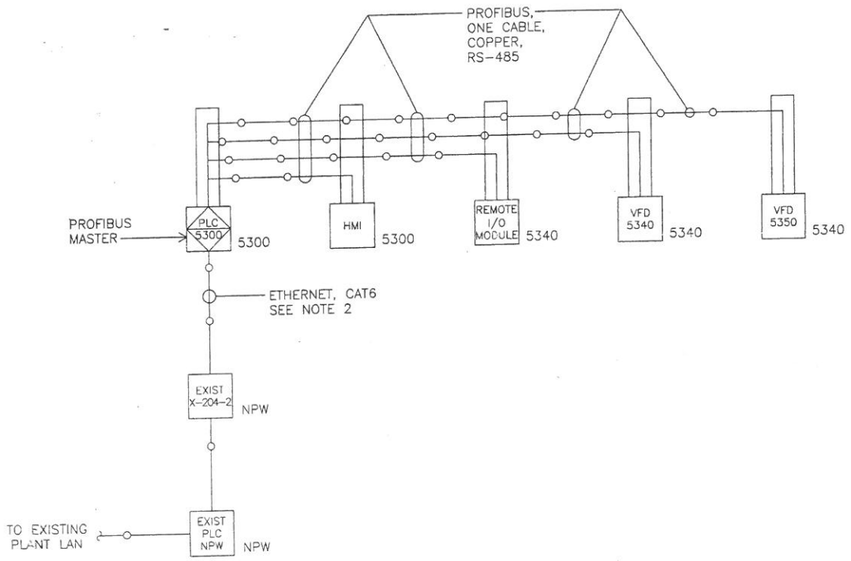

NEW ETHERNET AND PROFIBUS LAYOUT (PLC 5300)
SEE SCADA NETWORK SCHEMATIC I-101

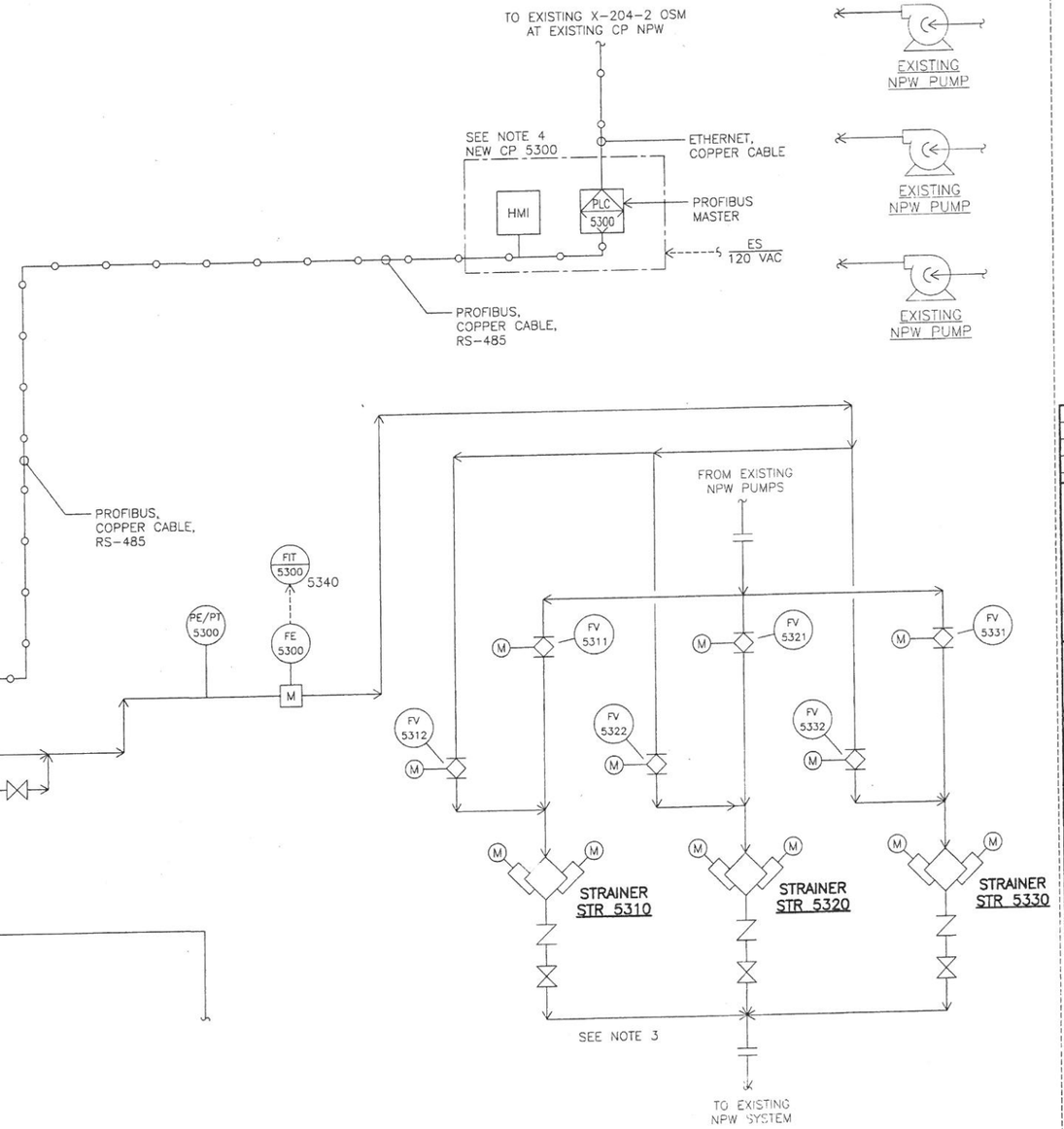

LEGEND:

NPW – NON-POTABLE WATER
HMI – HUMAN/MACHINE/INTERFACE
LAN – LOCAL AREA NETWORK
CP – CONTROL PANEL
OSM – OPTICAL SWITCH MODULE

NOTES:

1. PROFIBUS: COPPER CABLE, RS-485
2. CONNECT NEW CAT6 ETHERNET CABLE TO A SPARE COPPER PORT AT THE EXISTING OSM.
3. THE PRESSURE DIFFERENTIAL TRANSMITTERS AND FLUSHING VALVES ARE NOT SHOWN. REFER TO DRAWING I-110.
4. AS PER CITY OF HOUSTON ELECTRICAL CODE, ALL CONTROL AND ELECTRICAL PANELS SHALL BE UL LISTED AS AN ASSEMBLY. ALL COMPONENTS SHALL BE LISTED.

No.	Date	Revisions	App.

STATE OF TEXAS
DARRELL J. McADAMS
54522
LICENSED
PROFESSIONAL ENGINEER
9-21-11

Binkley & Barfield, Inc
consulting engineers
Texas Registration Number F-257
1710 Seamist Drive
Houston, Texas 77008-3189
(713) 869-3433

SURVEYED BY: AMANI ENG. | FIELD BOOK NO. : P-5486

CITY OF HOUSTON
DEPARTMENT OF PUBLIC WORKS AND ENGINEERING

ALMEDA SIMS WWTP & SPF IMPROVEMENTS-PACKAGE II

NON-POTABLE WATER STRAINER BACK FLUSH SYSTEM LAYOUT P & ID

FILE NO:	–
WBS: R-000298-0005-4	
DRAWING SCALE	NO SCALE
CITY OF HOUSTON PM	IMR
IRAJ RANJBAR, P.E.	
DWG NO. :	I-109
SHEET NO.	51 OF 147

PUBLIC WORKS AND ENGINEERING ACCEPTED & FILED
49061
CITY DRAWING NUMBER
HOUSTON, TEXAS

G:\115805 Almeda Sims Package II\Cadd Dwgs_I-109 Non Potable Water System.dwg Sep 21,2011 - 11:30am RPD

COLOR TABLE:

ORIGINAL SCALE IN INCHES FOR REDUCED PLANS
0 1 2 3

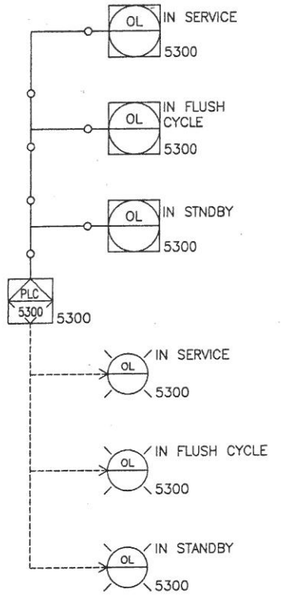

STATUS LIGHTS FOR STRAINERS

APPLICABLE FOR: STR-5310
STR-5320
STR-5330

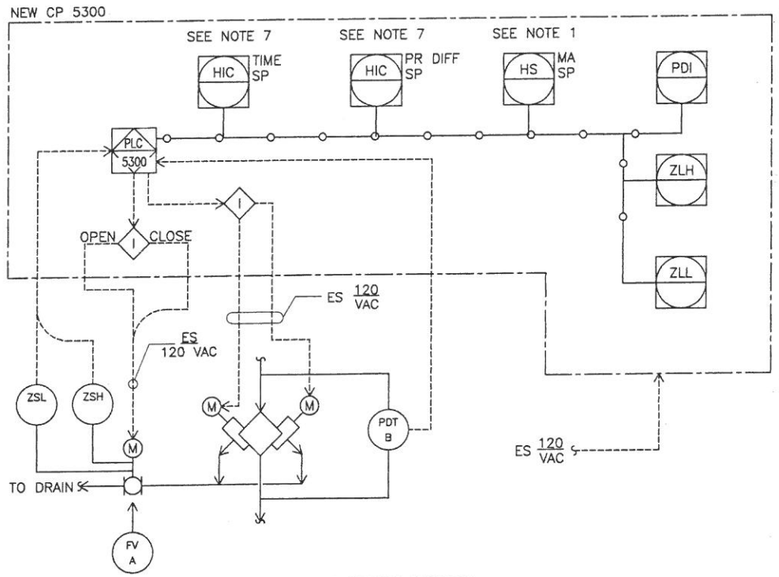

STRAINER BACKFLUSH SYSTEM

REFER TO ELECTRICAL DRAWINGS E-308 AND E-309

APPLICABLE FOR:		A	B
	STR-5310	FV 5313	PDT 5310
	STR-5320	FV 5323	PDT 5320
	STR-5330	FV 5333	PDT 5330

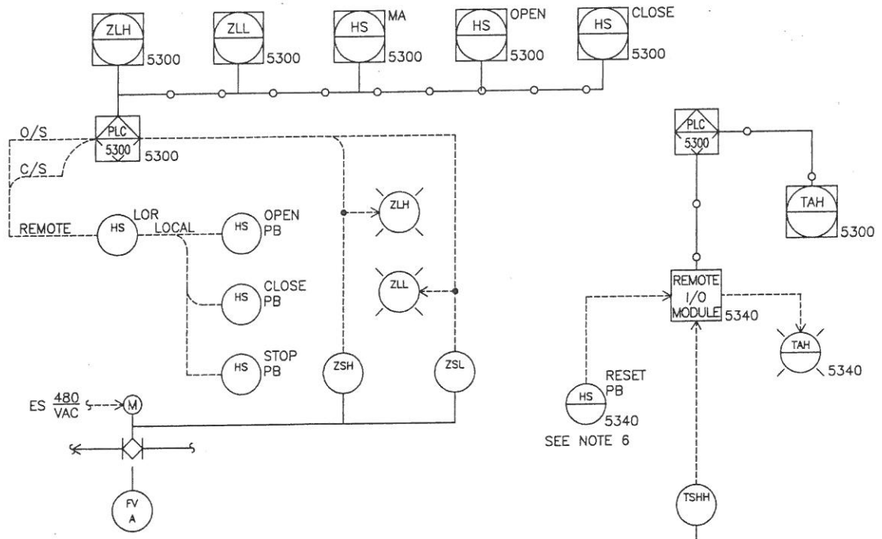

VALVE MONITORING AND CONTROL

REFER TO ELECTRICAL DRAWINGS E-308 THROUGH E-313

APPLICABLE FOR:	A
	FV 5311
	FV 5312
	FV 5321
	FV 5322
	FV 5331
	FV 5332

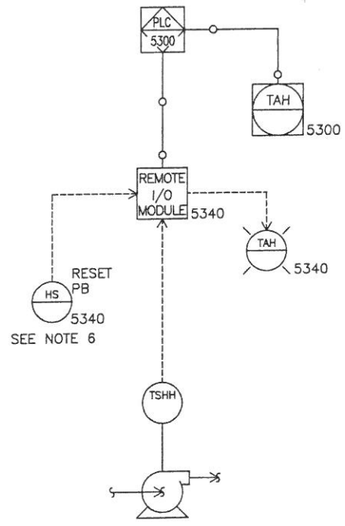

HIGH TEMPERATURE ALARM

APPLICABLE FOR: NPWP-5340
NPWP-5350

LEGEND:

NPW – NON-POTABLE WATER
HMI – HUMAN/MACHINE/INTERFACE
PB – PUSH BUTTON
I/O – INPUT/OUTPUT
SP – SETPOINT
MA – MANUAL/AUTO
LOR – LOCAL/OFF/REMOTE
O/S – OPEN/STOP
C/S – CLOSE/STOP
VFD – VARIABLE FREQUENCY DRIVE
PRES – PRESSURE
PR-DIFF – PRESSURE DIFFERENTIAL

NOTES:

1. REFER TO SPECIFICATION SECTION 13440 FOR MANUAL CONTROL.
2. REFER TO ELECTRICAL DRAWINGS E-308 THROUGH E-314.
3. THERE ARE MULTIPLE PRESSURE SETPOINTS. REFER TO SPECIFICATION SECTION 13440.
4. THE SPEED INDICATOR DISPLAYS THE SPEED COMMAND TO THE APPLICABLE VFD.
5. THE SPEED INDICATOR DISPLAYS THE SPEED FEEDBACK SIGNAL FROM THE APPLICABLE VFD.
6. ONE RESET PB, COMMON FOR BOTH PUMPS.
7. REFER TO SPECIFICATION SECTION 13440 FOR TIME AND PR-DIFF SETPOINTS.

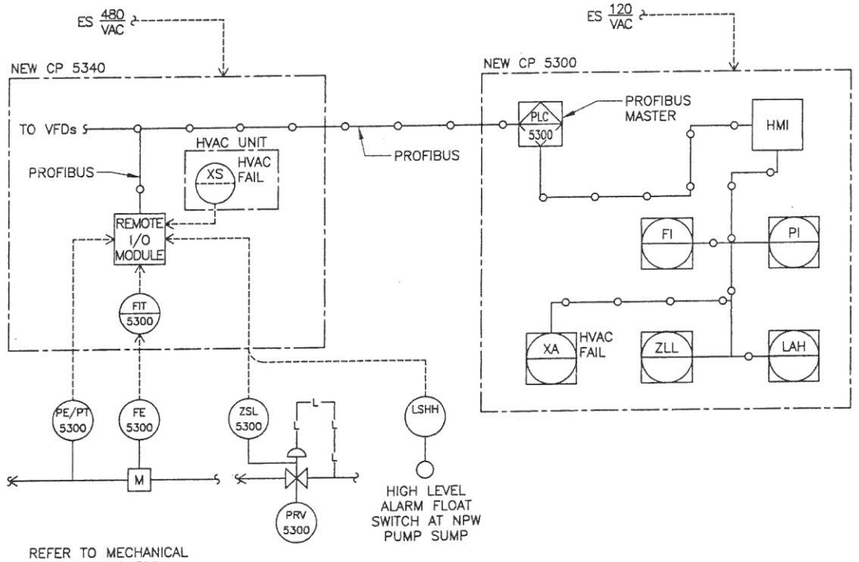

REFER TO MECHANICAL DRAWINGS FOR LOCATIONS OF FE 5300 AND PE/PT 5300

HIGH LEVEL ALARM FLOAT SWITCH AT NPW PUMP SUMP

TRANSMITTERS AND SWITCHES – NPW PUMP AREA

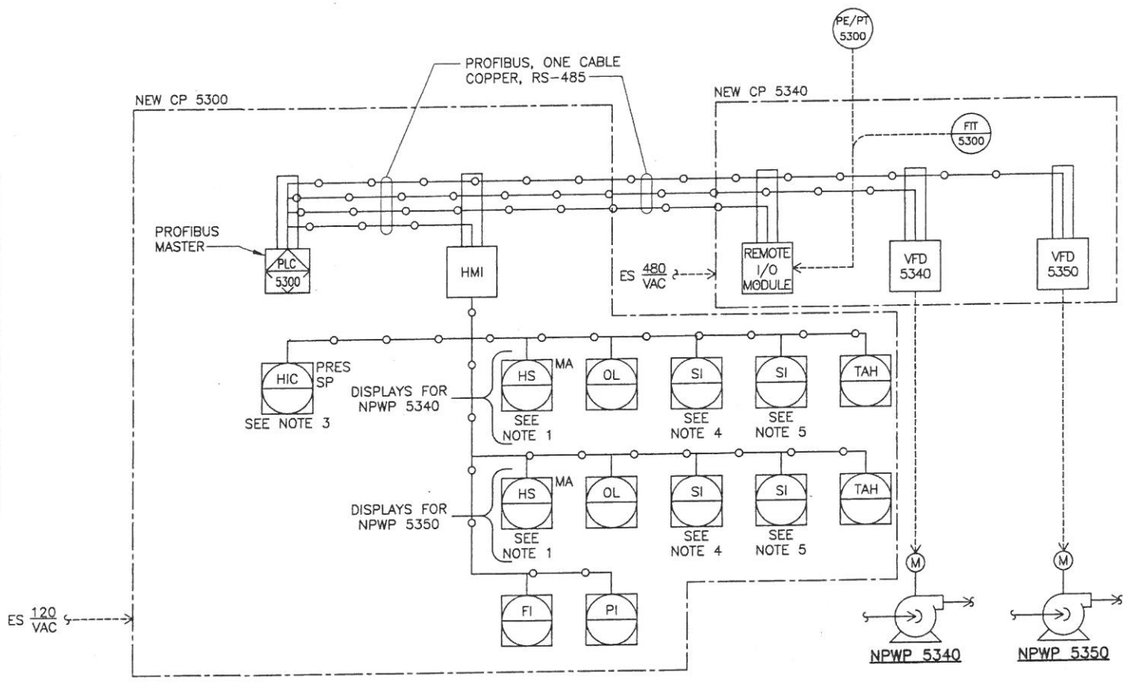

NPW PUMP CONTROL

No.	Date	Revisions	App.

STATE OF TEXAS
DARRELL J. McADAMS
54522
LICENSED
PROFESSIONAL ENGINEER
9-21-11

Binkley & Barfield, Inc
consulting engineers
Texas Registration Number F-257
1710 Seamist Drive
Houston, Texas 77008-3189
(713) 589-3433

SURVEYED BY: AMANI ENG. | FIELD BOOK NO. : P-5486

CITY OF HOUSTON
DEPARTMENT OF PUBLIC WORKS AND ENGINEERING

ALMEDA SIMS WWTP & SPF IMPROVEMENTS PACKAGE II

NON-POTABLE WATER STRAINER BACK FLUSH SYSTEM DETAILS P&ID

FILE NO:	–
WBS:	R-000298-0005-4
DRAWING SCALE	
NO SCALE	
CITY OF HOUSTON PM	
IRAJ RANJBAR, P.E.	
DWG NO. :	I-110
SHEET NO.	52 OF 147

PUBLIC WORKS AND ENGINEERING
ACCEPTED & FILED
49061
CITY DRAWING NUMBER
HOUSTON, TEXAS

G:\115805 Almeda Sims Package II\Cadd Dwgs_I-110 Non Potable Water System Details.dwg Sep 21,2011 – 11:33am RPD

COLOR TABLE:

ORIGINAL SCALE IN INCHES FOR REDUCED PLANS
0 1 2 3

MECHANICAL LEGEND AND NOTES

GENERAL PIPING NOTES

1. LAY PIPE TO UNIFORM GRADE BETWEEN INDICATED ELEVATION POINTS.
2. SIZE OF FITTINGS SHOWN ON PLANS SHALL CORRESPOND TO ADJACENT STRAIGHT RUN OF PIPE, UNLESS OTHERWISE INDICATED. TYPE OF JOINT AND FITTING MATERIAL SHALL BE THE SAME AS SHOWN FOR ADJACENT STRAIGHT RUN OF PIPE.
3. LOCATION AND NUMBER OF PIPE HANGERS AND PIPE SUPPORTS SHOWN IS ONLY APPROXIMATE. FINAL SUPPORT REQUIREMENTS SHALL BE DETERMINED IN THE FIELD AND APPROVED BY THE ENGINEER PRIOR TO INSTALLATION. MAXIMUM SPACING SHALL BE AS SPECIFIED.
4. ALL JOINTS SHALL BE WATERTIGHT. STANDARD WALL PIPE DETAIL SHALL BE USED WHEREVER PIPING PASSES FROM A STRUCTURE TO BACKFILL.
5. AT ALL LOCATIONS WHERE PIPING PENETRATES OR IS ATTACHED TO AN OUTSIDE WALL OF ANY TYPE, 2 JOINTS MUST BE INSTALLED WITHIN THE FIRST 10 FEET OUTSIDE OF THE WALL TO PROVIDE SETTLEMENT FLEXIBILITY IN THE PIPE.
6. ALL FLEXIBLE CONNECTORS OR FLANGED COUPLING ADAPTERS SHALL BE PROVIDED WITH THRUST TIES, OR ANCHORS, UNLESS OTHERWISE NOTED. THRUST PROTECTION SHALL BE ADEQUATE FOR PRESSURES SPECIFIED.
7. SYMBOLS, LEGENDS, AND PIPE USE IDENTIFICATIONS SHOWN SHALL BE FOLLOWED THROUGHOUT THE PLANS, WHEREVER APPLICABLE. ALL OF THE VARIOUS PIPING APPLICATIONS ARE NOT NECESSARILY USED IN THE PROJECT.
8. ALL BURIED PIPING SPECIFIED TO BE PRESSURE TESTED, EXCEPT FLANGED, WELDED, OR SCREWED PIPING, SHALL BE PROVIDED WITH MECHANICAL RESTRAINT JOINTS, UNLESS OTHERWISE NOTED.
9. NUMBER AND LOCATION OF UNIONS SHOWN ON PLANS IS ONLY APPROXIMATE. PROVIDE ALL UNIONS NECESSARY TO FACILITATE CONVENIENT REMOVAL OF VALVES AND MECHANICAL EQUIPMENT.

PIPE AND FITTING SYMBOLS

DOUBLE LINE	SINGLE LINE	
		EXISTING PIPE
		NEW PIPE
		EXISTING PIPE TO BE ABANDONED
		EXISTING PIPE TO BE REMOVED
		WELDED JOINT
		FLANGED JOINT
		FLANGED COUPLING ADAPTER
		FLEXIBLE COUPLING
		FLEXIBLE COUPLING WITH THRUST TIES
		STEEL BELLOWS EXP JOINT
		ELASTOMER BELLOWS EXP JOINT
		ELBOW UP
		ELBOW DOWN
		TEE UP
		TEE DOWN
		LATERAL UP

DOUBLE LINE	SINGLE LINE	
		LATERAL DOWN
		CONCENTRIC REDUCER
		ECCENTRIC REDUCER
		UNION
		CAP
		ANCHOR
		ELBOW, 90 DEGREE
		CROSS
		TEE
		ELBOW, 45 DEGREE
		LATERAL

NOTES:

1. ONLY FLANGED END CONNECTIONS ARE SHOWN HERE FOR DOUBLE LINE FITTINGS. FITTINGS WITH OTHER END PATTERNS ARE SHOWN SIMILARLY ON THE CONSTRUCTION DRAWINGS. ALSO SEE PIPING SPECIFICATIONS.
2. SYMBOLS SHOWN HERE FOR SINGLE LINE FITTINGS ARE GENERIC ONLY. REFER TO PIPING SPECIFICATIONS FOR SPECIFIC END CONNECTIONS FOR SINGLE LINE PIPE AND FITTINGS.
3. EXISTING PIPING AND EQUIPMENT ARE SHOWN LIGHT-LINED AND/OR SCREENED AND ARE NOTED AS EXISTING NEW PIPING AND EQUIPMENT IS SHOWN HEAVY-LINED

MISCELLANEOUS PIPING SYMBOLS

GAUGE WITH COCK

PS 26-1-2 — TYPICAL INSTRUMENT SYMBOL (SEE I&C LEGEND)

PLUMBING FIXTURE IDENTIFICATION

SSK	SERVICE SINK
SSH	SAFETY SHOWER

EXAMPLE: SSH-1

FIXTURE LEGEND

NO. IN SPECIFICATIONS

GENERAL NOTE

THIS IS A STANDARD LEGEND, THEREFORE, NOT ALL OF THE INFORMATION SHOWN MAY BE USED ON THIS PROJECT.

PIPING DESIGNATION

EXAMPLE: 6" RCY

6" RCY

6" — NOMINAL PIPE DIAMETER

RCY — PIPE USE IDENTIFICATION LEGEND (SEE SHT I-1 FOR FLOW STREAM IDENTIFICAITON LEGEND)

HEAT TRACING

HTIP — HEAT TRACED AND INSULATED PIPE

(X) — END POINTS OF HEAT TRACED AND INSULATED PIPE

VALVE DESIGNATIONS

MANUAL VALVES AND CHECK VALVES

1"-V300

SIZE OF VALVE

VALVE DESIGNATION

VALVE TYPE, SEE SPECIFICATIONS

BUILDING SERVICES SYMBOLS

PS — PRESSURE SWITCH

HOSE RACK (TYPE AS INDICATED)

EYEWASH WITH SAFETY SHOWER

FE-X — FIRE EXTINGUISHER X = NO. IN SPECS

XCO — X = F - FLOOR CLEANOUT, D - DECK CLEANOUT, W - WALL CLEANOUT

FD-X — FLOOR DRAIN X - NO. IN SPECS

HD-X — HUB DRAIN X - NO. IN SPECS

HEATING, VENTILATING, AND AIR CONDITIONING SYMBOLS

WALL REGISTER OR GRILLE (SUPPLY) BG, BR, TG, TR

CEILING DIFFUSER OR REGISTER (SUPPLY) CD, CR

CEILING REGISTER OR GRILLE (RETURN AND EXHAUST) CG, CR

WALL REGISTER OR GRILLE (RETURN AND EXHAUST) BG, BR, TG, TR

TURNING VANES

EXTRACTOR VANES

FD — FIRE DAMPER

SPLITTER DAMPER

MANUAL BUTTERFLY DAMPER

M — MOTORIZED DAMPER OR LOUVER

FLEXIBLE CONNECTION

FLEXIBLE DUCTWORK

SUPPLY DUCT (SECTION)

INTAKE, RETURN, OR EXHAUST DUCT (SECTION)

T — THERMOSTAT

(200) — 200 SCFM

VALVE SYMBOLS

GATE	MUD (PROFILE)	S	SAMPLE
BUTTERFLY	MUD (PLAN)		SEAT PORT
GLOBE	PRESSURE RELIEF		ECCENTRIC PLUG
BALL	AIR AND/OR VACUUM RELEASE		
SWING CHECK	PINCH		
DOUBLE DISC CHECK	REGULATED SIDE PRESSURE CONTROL		
BALL CHECK			
HOSE VALVE			

FLOW STREAM IDENTIFICATION

ALP	AIR, LOW PRESSURE PROCESS	NPW	(BACKFLOW PREVENTED)
BYP	BYPASS	OF	OVERFLOW
CNP	CONCENTRATED POLYMER	PD	PUMP DISCHARGE
D	SANITARY DRAIN	PRS	PROCESS SLUDGE
DEC	DECANT	RAS	RETURN ACTIVATED SLUDGE
DLP	DILUTE POLYMER	RS	RAW SEWAGE
DPS	DILUTE POLYMER SOLUTION	SBS	SODIUM BISULFITE SOLUTION
DR	PROCESS DRAIN	SE	SECONDARY EFFLUENT
FE	FINAL EFFLUENT	V	VENT
FO	FUEL OIL	WAS	WASTE ACTIVATED SLUDGE
ML	MIXED LIQUOR	W-1	POTABLE CITY WATER
		W-3	NONPOTABLE WATER
		SRS	SCREENED RAW SEWAGE

WARNING

0 1

IF THIS BAR DOES NOT MEASURE 1" THEN DRAWING IS NOT TO SCALE

TO ARRANGE FOR LINES TO BE TURNED OFF OR MOVED, CALL CENTERPOINT AT 713-207-7777.

PRIVATE UTILITY LINES SHOWN

AT LEAST 48 HOURS BEFORE EXCAVATING IN STREET R.O.W. OR EASEMENTS CALL THE LONE STAR NOTIFICATION 713-223-4567.

Date:

CenterPoint Energy/Electric Facilities (Approved only for crossing underground ductlines, unless otherwise noted.) Valid at time of review only.

Date:

SBC Approved for underground conduit facilites only. Signature valid for one year.

Date:

CenterPoint Energy/Gas Facilities (Gas service lines are not shown)

No.	Date	Revisions	App.

STATE OF TEXAS — RAMESH KALLURI 68078 — REGISTERED PROFESSIONAL ENGINEER

Ramesh Kalluri 9/19/2011

KGI Kalluri Group, Inc.
Consulting Engineers & Project Managers
TBPE Registration No. F-685
10497 Town & Country Way, Suite 220
Houston, Texas 77024
Phone: (713)-365-9288

Binkley & Barfield, Inc
consulting engineers
Texas Registration Number F 257
1710 Seamist Drive
Houston, Texas 77008-3189
(713) 869-3433

SURVEYED BY: AMANI ENG. | FIELD BOOK NO. : P-5486

CITY OF HOUSTON
DEPARTMENT OF PUBLIC WORKS AND ENGINEERING

ALMEDA SIMS WWTP & SPF IMPROVEMENTS PACKAGE II

MECHANICAL LEGEND

FILE NO:	-
WBS: R-000298-0005-4	
DRAWING SCALE	N.T.S.
CITY OF HOUSTON PM	IRAJ RANJBAR, P.E.
DWG NO. :	M-100
SHEET NO. 53 OF 147	

PUBLIC WORKS AND ENGINEERING — ACCEPTED & FILED — 49061 — CITY DRAWING NUMBER — HOUSTON, TEXAS

NOTES:

1. CONTRACTOR SHALL PERFORM GROUND PROBING AND POTHOLE TESTING TO AVOID EXISTING DUCTBANK OR PIPES.
2. STAIRS TO BE FURNISHED BY GRAVITY THICKENER MANUFACTURER. SEE SHEET D-109 FOR STAIR DETAILS.
3. AFTER DEMOLITION OF EXISTING STRUCTURES, CONTRACTOR SHALL BACKFILL THE EXCAVATED AREAS WITH SELECT MATERIAL, INSTALL 8-INCHES OF LIME STABILIZED SUB-GRADE AND CONCRETE PAVING TO THE LIMITS SHOWN ON THE DRAWING. INCLUDE THE COST OF SAME IN THE BID PRICE.

N

EXISTING THICKENER NO. 1

EXISTING THICKENER NO. 2

LIMITS OF NEW CONCRETE PAVING (NOTE 3)

EXISTING 12" PROCESS DRAIN TO MANHOLE #7

EXISTING 100-FT GRAVITY THICKENER

EXISTING 14" WAS FORCEMAIN

EXISTING 14" WAS SCREENING DISCHARGE PIPE

A M-104

TIE 101

TIE 102

TIE 103

PROPOSED 14" D.I.P.

NOTE 2

NEW STAIRS

PROPOSED SCREEN SEE DWG M-102

SCREENING FACILITY SITE PLAN

SCALE: 3/16"=1'-0"

WARNING

0 1

IF THIS BAR DOES NOT MEASURE 1" THEN DRAWING IS NOT TO SCALE

TO ARRANGE FOR LINES TO BE TURNED OFF OR MOVED, CALL CENTERPOINT AT 713-207-7777.

PRIVATE UTILITY LINES SHOWN

AT LEAST 48 HOURS BEFORE EXCAVATING IN STREET R.O.W. OR EASEMENTS CALL THE LONE STAR NOTIFICATION 713-223-4567.

Date:

CenterPoint Energy/Electric Facilities
(Approved only for crossing underground ductlines, unless otherwise noted.)
Valid at time of review only.

Date:

SBC Approved for underground conduit facilites only.
Signature valid for one year.

Date:

CenterPoint Energy/Gas Facilities
(Gas service lines are not shown)

No.	Date	Revisions	App.

STATE OF TEXAS
RAMESH KALLURI
68078
REGISTERED PROFESSIONAL ENGINEER
9/19/2011

KGI Kalluri Group, Inc.
Consulting Engineers & Project Managers
TBPE Registration No. F-665
10497 Town & Country Way, Suite 220
Houston, Texas 77024
Phone: (713)-365-9288

Binkley & Barfield, Inc
consulting engineers
Texas Registration Number F-257
1710 Seamist Drive
Houston, Texas 77008-3189
(713) 869-3433

SURVEYED BY: AMANI ENG. | FIELD BOOK NO. : P-5486

CITY OF HOUSTON
DEPARTMENT OF PUBLIC WORKS AND ENGINEERING

ALMEDA SIMS WWTP & SPF IMPROVEMENTS PACKAGE II

SLUDGE SCREENING FACILITY SITE PLAN

FILE NO:	-
WBS: R-000298-0005-4	
DRAWING SCALE	
3/16" = 1'-0"	
CITY OF HOUSTON PM	
IRAJ RANJBAR, P.E.	
DWG NO. :	M-101
SHEET NO.	54 OF 147

PUBLIC WORKS AND ENGINEERING
ACCEPTED & FILED
49061
CITY DRAWING NUMBER

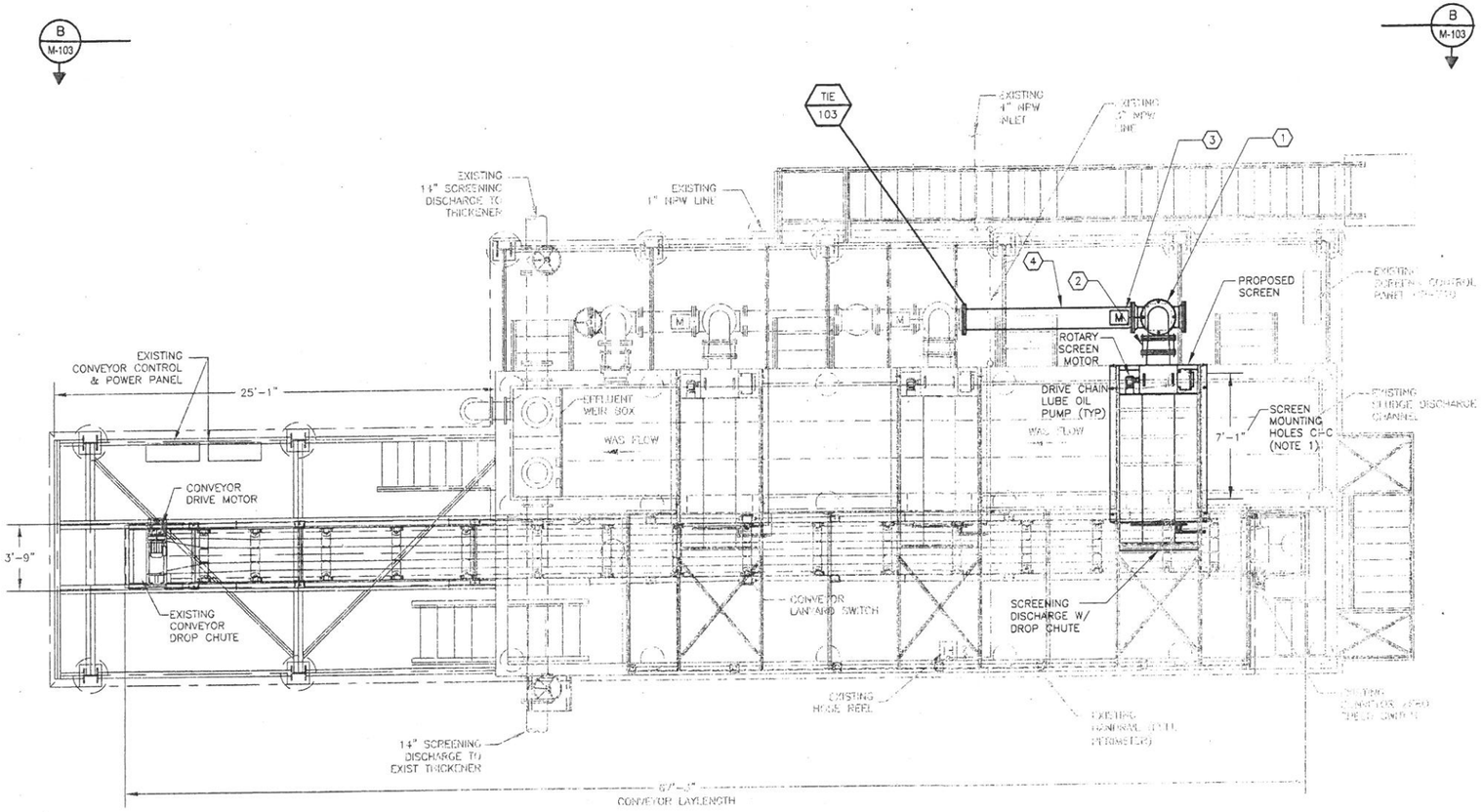

SCREENING FACILITY PLAN

SCALE: 1/4"=1'-0"

KEYED NOTES:

1. 14" ELL. & FITTING, D.I.P.
2. 14" DRESSER COUPLING
3. 14" PLUG VALVE W/ ELEC ACTUATOR.
4. 14" SPOOL, D.I.P.

NOTES:

1. DIMENSIONS SHOWN ARE BASED ON USING HYCOR MODEL ROTOSHEAR HRS3672. USE OF OTHER SCREENS MODEL MAY REQUIRE MODIFICATION OF THE STRUCTURE TO FIT. SEE SPEC SECTION 11070 FOR DETAILS OF ROTARY SCREENS.
2. GRATINGS NOT SHOWN FOR CLARITY.
3. SEE DRAWING I-104 & 105 FOR INSTRUMENTATION AND CONTROLS.
4. PRIOR TO START OF CONSTRUCTION, CONTRACTOR SHALL FIELD VERIFY DIMENSIONS OF THE EXISTING SCREENING FACILITY STRUCTURE, EQUIPMENT, PIPING, ETC. FURNISH THIS INFORMATION TO EQUIPMENT SUPPLIER FOR DESIGN OF THEIR EQUIPMENT INCLUDING THE LIQUID DISCHARGE CHUTE. IN ADDITION, CONTRACTOR SHALL SUBMIT A SHOP DRAWING SHOWING ALL OF THE PROPOSED EQUIPMENT LAYOUT, PIPING, VALVES, SUPPORTS AND TIE-INS IN RELATION TO THE EXISTING STRUCTURE FOR OWNER'S REVIEW AND APPROVAL. THE DRAWINGS SHALL BE PREPARED IN AUTOCAD R-2003 OR HIGHER. INCLUDE THE COST OF SAME IN THE BID PRICE.

TO ARRANGE FOR LINES TO BE TURNED OFF OR MOVED, CALL CENTERPOINT AT 713-207-7777.

PRIVATE UTILITY LINES SHOWN

AT LEAST 48 HOURS BEFORE EXCAVATING IN STREET R.O.W. OR EASEMENTS CALL THE LONE STAR NOTIFICATION 713-223-4567.

Date:

CenterPoint Energy/Electric Facilities
(Approved only for crossing underground ductlines, unless otherwise noted.)
Valid at time of review only.

Date:

SBC Approved for underground conduit facilites only.
Signature valid for one year.

Date:

CenterPoint Energy/Gas Facilities
(Gas service lines are not shown)

No.	Date	Revisions	App.

STATE OF TEXAS
RAMESH KALLURI
68078
REGISTERED
PROFESSIONAL ENGINEER
Ramesh Kalluri
9/19/2011

KGI Kalluri Group, Inc.
Consulting Engineers & Project Managers
TBPE Registration No. F-665
10497 Town & Country Way, Suite 220
Houston, Texas 77024
Phone: (713)-365-9288

Binkley & Barfield, Inc
consulting engineers
Texas Registration Number F-257
1710 Seamist Drive
Houston, Texas 77008-3189
(713) 869-3433

SURVEYED BY: AMANI ENG. | FIELD BOOK NO. : P-5486

CITY OF HOUSTON
DEPARTMENT OF PUBLIC WORKS AND ENGINEERING

ALMEDA SIMS WWTP & SPF IMPROVEMENTS PACKAGE II

SCREENING FACILITY ENLARGED PLAN

FILE NO:	-
WBS: R-000298-0005-4	
DRAWING SCALE	1/4"=1'-0"
CITY OF HOUSTON PM	IRAJ RANJBAR, P.E.
DWG NO. :	M-102
SHEET NO.	55 OF 147

PUBLIC WORKS AND ENGINEERING
ACCEPTED & FILED
49061
CITY DRAWING NUMBER
HOUSTON, TEXAS

WARNING
0 1
IF THIS BAR DOES NOT MEASURE 1" THEN DRAWING IS NOT TO SCALE

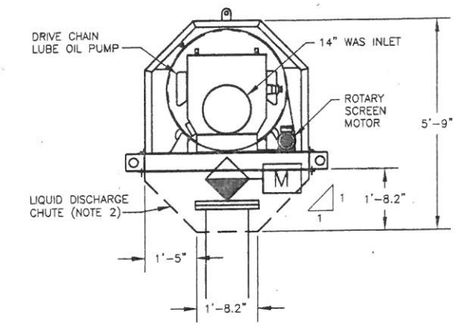

ROTARY SCREEN DETAIL (1/-)
SCALE: 1/2"=1'-0"

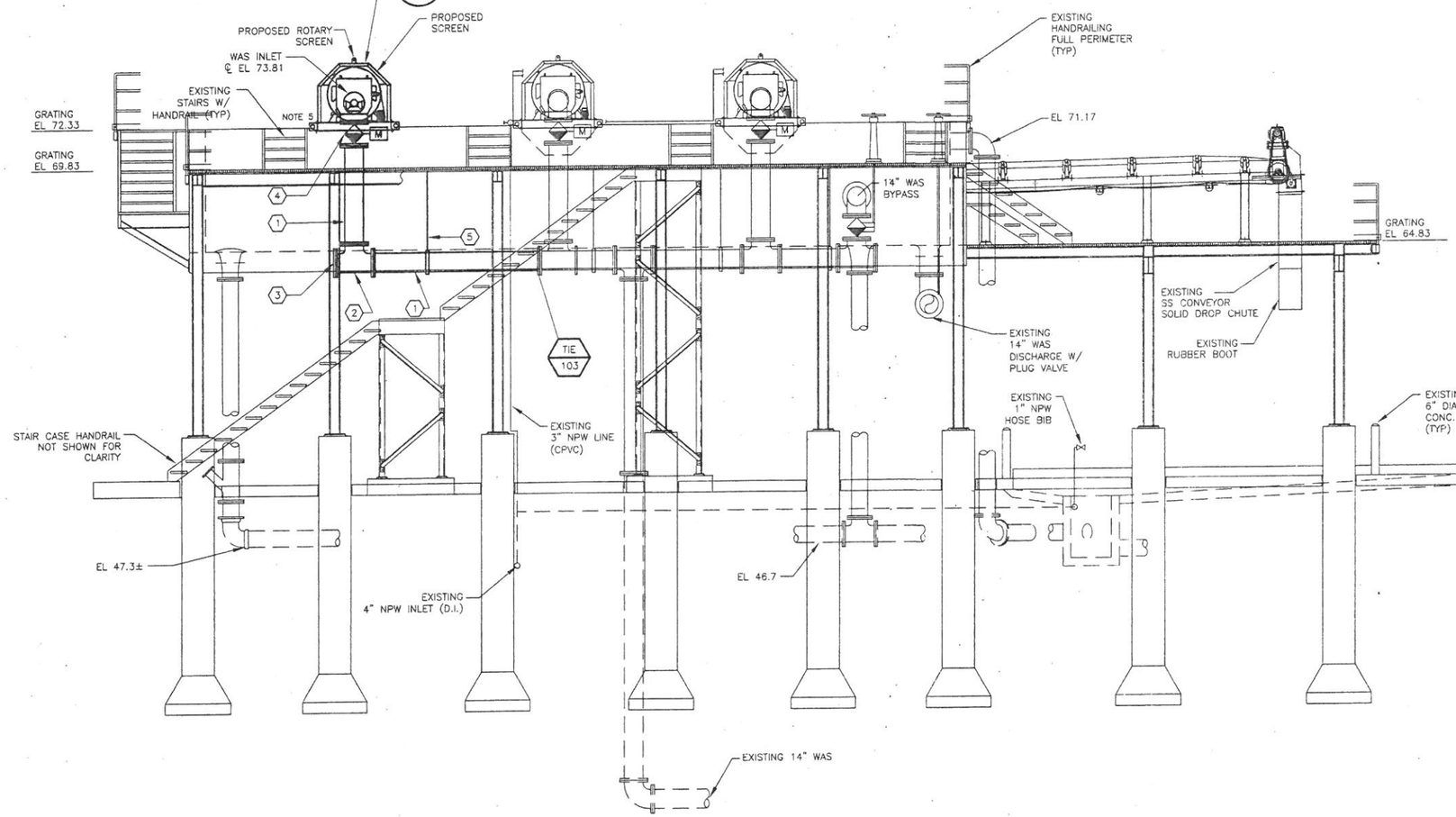

SCREENING FACILITY PROFILE EAST ELEVATION (B / M-101)
SCALE: 1/4"=1'-0"

KEYED NOTES:

1. 14" SPOOL D.I.P.
2. 14" TEE DIP
3. 14" BLIND FLANGE, D.I.P
4. 14" PLUG VALVE W/ ELEC ACTUATOR
5. PIPE HANGER FOR 14" PIPE (TYP) SEE DETAIL-224

NOTES:

1. DIMENSIONS SHOWN ARE BASED ON USING HYCOR MODEL ROTOSHEAR HRS3672. USE OF OTHER SCREENS MODEL MAY REQUIRE MODIFICATION OF THE STRUCTURE TO FIT. SEE SPEC SECTION 11070 FOR DETAILS OF ROTARY SCREENS.
2. 82" X 56" X 24" FABRICATED S.S. LIQUID DISCHARGE CHUTE BY ROTARY SCREEN MANUFACTURER.
3. SEE DRAWING M-102 FOR SCREENS FACILITY PLAN.
4. SEE ELECTRICAL DRAWING E-100 FOR POWER AND CONDUIT.
5. SEE NOTES 5 & 6 ON DWG. NO. M-104.

WARNING
0 1
IF THIS BAR DOES NOT MEASURE 1" THEN DRAWING IS NOT TO SCALE

TO ARRANGE FOR LINES TO BE TURNED OFF OR MOVED, CALL CENTERPOINT AT 713-207-7777.

PRIVATE UTILITY LINES SHOWN
AT LEAST 48 HOURS BEFORE EXCAVATING IN STREET R.O.W. OR EASEMENTS CALL THE LONE STAR NOTIFICATION 713-223-4567.

Date:
CenterPoint Energy/Electric Facilities (Approved only for crossing underground ductlines, unless otherwise noted.) Valid at time of review only.
Date:
SBC Approved for underground conduit facilites only. Signature valid for one year.
Date:
CenterPoint Energy/Gas Facilities (Gas service lines are not shown)

No.	Date	Revisions	App.

STATE OF TEXAS — RAMESH KALLURI — 58078 — REGISTERED PROFESSIONAL ENGINEER
9/19/201

KGI Kalluri Group, Inc.
Consulting Engineers & Project Managers
TBPE Registration No. F-665
10497 Town & Country Way, Suite 220
Houston, Texas 77024
Phone: (713)-365-9288

Binkley & Barfield, Inc
consulting engineers
Texas Registration Number F-257
1710 Seamist Drive
Houston, Texas 77008-3189
(713) 869-3433

SURVEYED BY: AMANI ENG. | FIELD BOOK NO. : P-5486

CITY OF HOUSTON
DEPARTMENT OF PUBLIC WORKS AND ENGINEERING

ALMEDA SIMS WWTP & SPF IMPROVEMENTS PACKAGE II

SCREENING FACILITY EAST ELEVATION

FILE NO:	-
WBS: R-000298-0005-4	
DRAWING SCALE	N.T.S.
CITY OF HOUSTON PM	IRAJ RANJBAR, P.E.
DWG NO. :	M-103
SHEET NO.	56 OF 147

PUBLIC WORKS AND ENGINEERING — ACCEPTED & FILED — 49061 CITY DRAWING NUMBER — HOUSTON, TEXAS

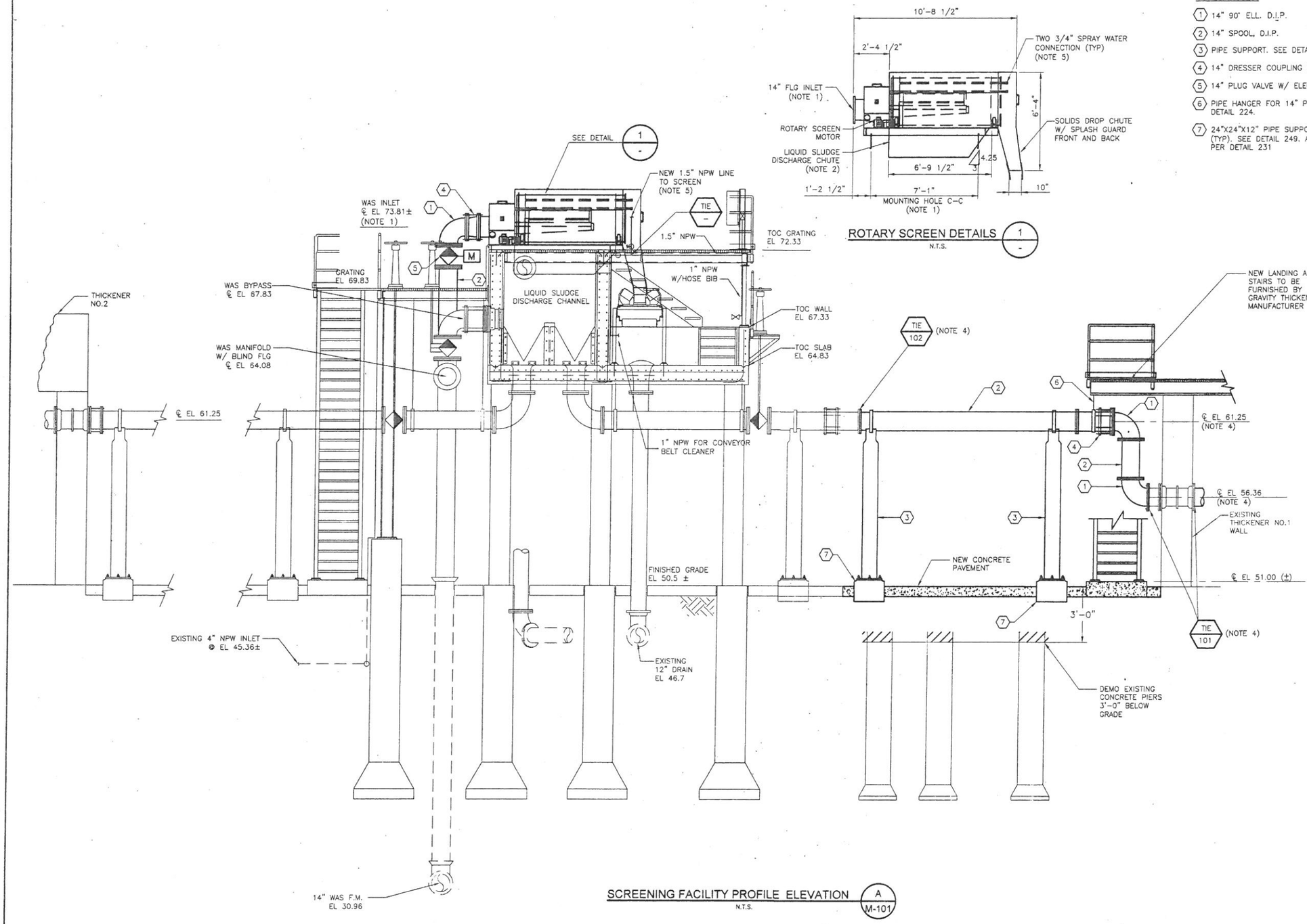

SCREENING FACILITY PROFILE ELEVATION (A / M-101)
N.T.S.

ROTARY SCREEN DETAILS (1)
N.T.S.

KEYED NOTES:

1. 14" 90° ELL. D.I.P.
2. 14" SPOOL, D.I.P.
3. PIPE SUPPORT. SEE DETAIL 231
4. 14" DRESSER COUPLING (RESTRAINED)
5. 14" PLUG VALVE W/ ELEC ACTUATOR.
6. PIPE HANGER FOR 14" PIPE (TYP.) SEE DETAIL 224.
7. 24"X24"X12" PIPE SUPPORT FOUNDATION (TYP). SEE DETAIL 249. ANCHOR BOLTS PER DETAIL 231

NOTES:

1. DIMENSIONS SHOWN ARE BASED ON USING HYCOR MODEL ROTOSHEAR HRS3672 USE OF OTHER SCREENS MODEL MAY REQUIRE MODIFICATION OF THE STRUCTURE TO FIT. SEE SPEC SECTION 11070 FOR DETAILS OF ROTARY SCREENS.
2. PROVIDE FABRICATED S.S. LIQUID DISCHARGE CHUTE (APPROX. 82" X 56" X 24") BY ROTARY SCREEN MANUFACTURE TO FIT EXISTING WAS CHANNEL STRUCTURE.
3. SCREENING SOLIDS DROP CHUTE POSITION TO BE CENTERED ON BELT CONVEYOR.
4. FIELD VERIFY LOCATION AND END CONNECTIONS OF EXISTING PIPE PRIOR TO FABRICATION OF PIPE.
5. CONTRACTOR TO INSTALL A MINIMUM 1 1/2" NPW LINE TO THE PROPOSED ROTARY SCREEN. TIE-IN TO THE NEAREST EXISTING 1 1/2" NPW LINE. EACH SCREEN REQUIRES TWO 3/4" NPW LINES FOR SPRAY HEADERS. PROVIDE AN ISOLATION VALVE AND PRESSURE REGULATING VALVE FOR EACH SPRAY HEADER PER ROTARY SCREEN MANUFACTURER RECOMMENDATIONS.
6. ALL ABOVE GROUND NON-POTABLE WATER (NPW) LINES SHALL BE FIELD ROUTED, SCHEDULE 80 CVPC WITH STAINLESS STEEL BRACKETS AND STAINLESS STEEL PIPE HANGERS. ALL ABOVE GROUND NPW LINES SHALL BE INSULATED FOR FREEZE PROTECTION. CONTRACTOR SHALL NOT CREATE A TRIPPING HAZARD WHEN ROUTING THE PROPOSED NPW LINES.

TO ARRANGE FOR LINES TO BE TURNED OFF OR MOVED, CALL CENTERPOINT AT 713-207-7777.

PRIVATE UTILITY LINES SHOWN
AT LEAST 48 HOURS BEFORE EXCAVATING IN STREET R.O.W. OR EASEMENTS CALL THE LONE STAR NOTIFICATION 713-223-4567.

Date:
CenterPoint Energy/Electric Facilities
(Approval only for crossing underground ductlines, unless otherwise noted.) Valid at time of review only.

Date:
SBC Approved for underground conduit facilites only. Signature valid for one year.

Date:
CenterPoint Energy/Gas Facilities
(Gas service lines are not shown)

No.	Date	Revisions	App.

STATE OF TEXAS
RAMESH KALLURI
68078
REGISTERED PROFESSIONAL ENGINEER
9/9/2011

KGI Kalluri Group, Inc.
Consulting Engineers & Project Managers
TBPE Registration No. F-565
10497 Town & Country Way, Suite 220
Houston, Texas 77024
Phone: (713)-365-9288

Binkley & Barfield, Inc
consulting engineers
Texas Registration Number F-257
1710 Seamist Drive
Houston, Texas 77008-3189
(713) 869-3433

SURVEYED BY: AMANI ENG. | FIELD BOOK NO. : P-5486

CITY OF HOUSTON
DEPARTMENT OF PUBLIC WORKS AND ENGINEERING

ALMEDA SIMS WWTP & SPF IMPROVEMENTS PACKAGE II

SCREENING FACILITY PROFILE

FILE NO:	-
WBS:	R-000298-0005-4
DRAWING SCALE	N.T.S.
CITY OF HOUSTON PM	IRAJ RANJBAR, P.E.
DWG NO. :	M-104
SHEET NO.	57 OF 147

PUBLIC WORKS AND ENGINEERING
ACCEPTED & FILED
49061
CITY DRAWING NUMBER
HOUSTON, TEXAS

WARNING
0 1
IF THIS BAR DOES NOT MEASURE 1" THEN DRAWING IS NOT TO SCALE.

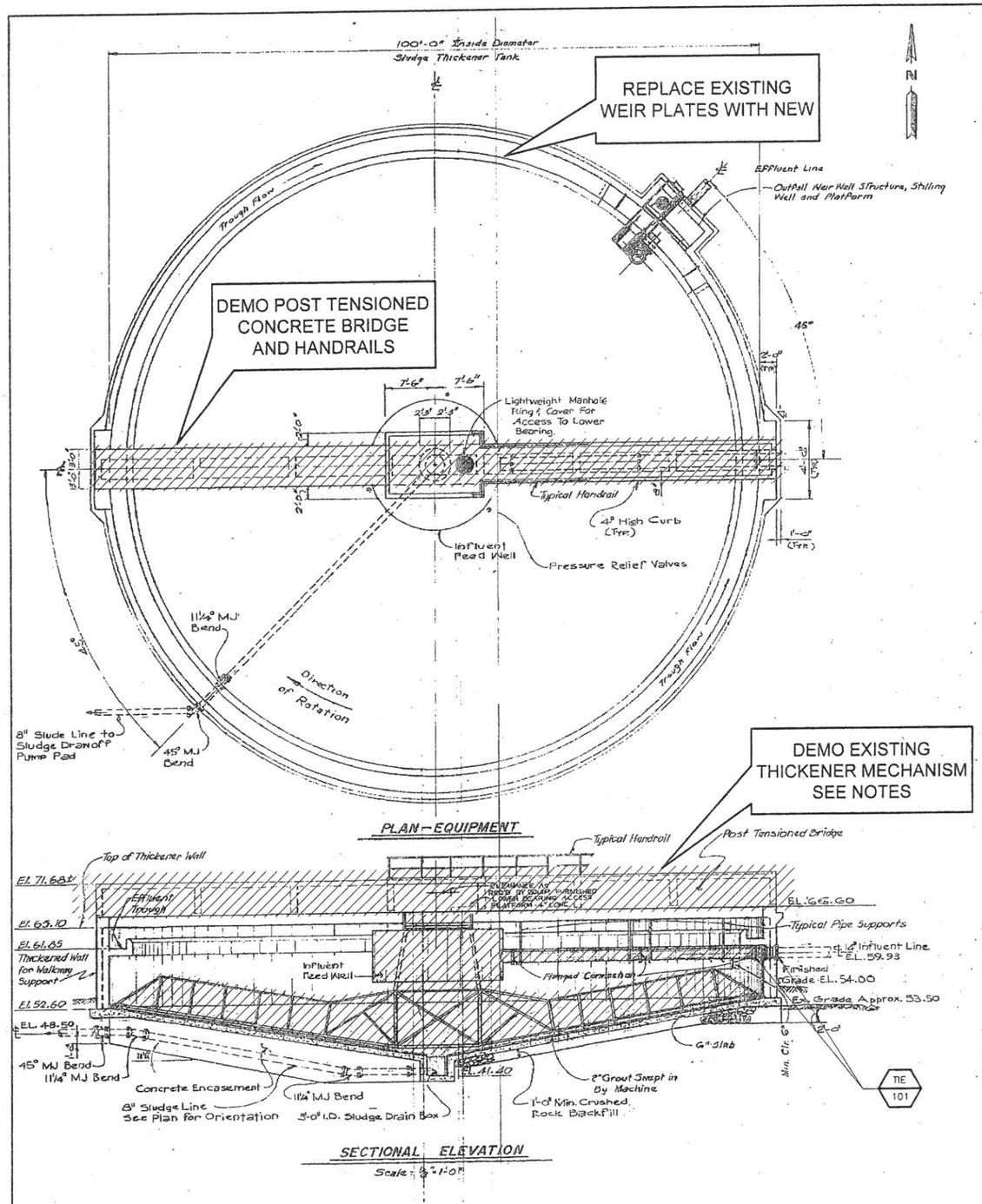

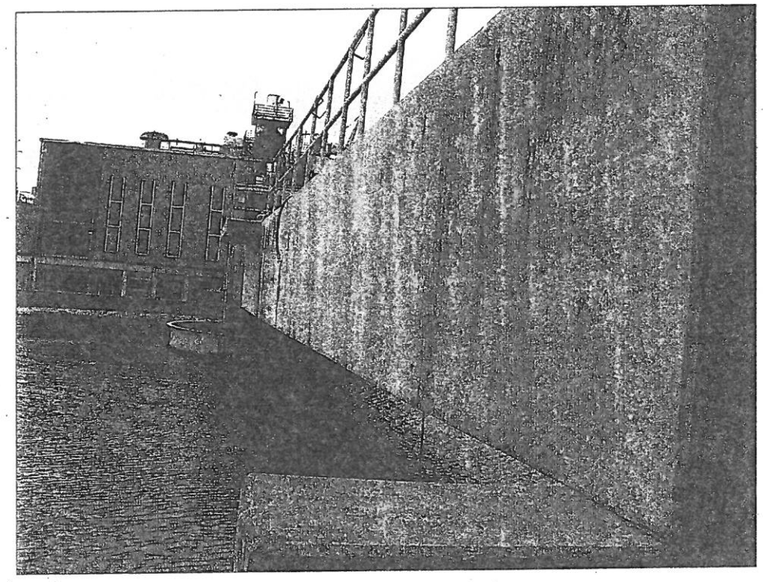

PHOTO 1 EXISTING THICKENED CONCRETE BRIDGE SUPPORTED MECHANISM

SCALE: N.T.S.

DO NOT USE ELEVATIONS SHOWN ON THIS DRAWING FIELD VERIFY ALL ELEVATIONS

NOTES

1. DEMOLISH AND REMOVE THE FOLLOWING:
   - THICKENER MECHANISM INCLUDING DRIVE UNIT, CENTER SHAFT, FEED WELL, RAKE ARMS AND OTHER MISCELLANEOUS APPURTENANCES AS REQUIRED.
   - CONCRETE BRIDGE AND HANDRAILS
   - INFLUENT PIPE INCLUDING SUPPORTS
   - EXISTING GROUT
   - ASSOCIATED ELECTRICAL EQUIPMENT
2. COORDINATE WITH OWNER FOR DRAINING THE THICKENER. CONTRACTOR SHALL PRESSURE WASH, CLEAN THE EXISTING THICKENER PRIOR TO START OF ANY DEMOLITION WORK.
3. CONTRACTOR SHALL DISPOSE OF THE DEMOLISHED MATERIAL OFF-SITE AT NO ADDITIONAL COST TO THE OWNER.
4. SOME COMPONENTS OF THE EXISTING THICKENER MECHANISM SHOWN IN THIS DRAWING COULD BE MISSING AND/OR REMOVED BY OWNER.
5. ALL ELEVATIONS SHOWN ARE BASED ON EXISTING RECORD DRAWINGS. CONTRACTOR SHALL FIELD VERIFY ALL DIMENSIONS INCLUDING ELEVATION PRIOR TO CONSTRUCTION.
6. CONTRACTOR SHALL REMOVE ALL ELECTRICAL WIRE AND CONDUITS RELATED TO THE EQUIPMENT BEING DEMOLISHED.

TO ARRANGE FOR LINES TO BE TURNED OFF OR MOVED, CALL CENTERPOINT AT 713-207-7777.

PRIVATE UTILITY LINES SHOWN
AT LEAST 48 HOURS BEFORE EXCAVATING IN STREET R.O.W. OR EASEMENTS CALL THE LONE STAR NOTIFICATION 713-223-4567.

Date:

CenterPoint Energy/Electric Facilities
(Approved only for crossing underground ductlines, unless otherwise noted.)
Valid at time of review only.

Date:

SBC Approved for underground conduit facilites only.
Signature valid for one year.

Date:

CenterPoint Energy/Gas Facilities
(Gas service lines are not shown)

No.	Date	Revisions	App.

STATE OF TEXAS
RAMESH KALLURI
68078
REGISTERED PROFESSIONAL ENGINEER
Ramesh Kalluri
9/19/2011

KGI Kalluri Group, Inc.
Consulting Engineers & Project Managers
TBPE Registration No. F-685
10497 Town & Country Way, Suite 220
Houston, Texas 77024
Phone: (713)-365-9288

Binkley & Barfield, Inc
consulting engineers
Texas Registration Number F-257
1710 Seamist Drive
Houston, Texas 77008-3189
(713) 869-3433

SURVEYED BY: AMANI ENG. | FIELD BOOK NO. : P-5486

CITY OF HOUSTON
DEPARTMENT OF PUBLIC WORKS AND ENGINEERING

ALMEDA SIMS WWTP & SPF IMPROVEMENTS PACKAGE II

SLUDGE THICKENER DEMOLITION

FILE NO:	-
WBS: R-000298-0005-4	
DRAWING SCALE	N.T.S.
CITY OF HOUSTON PM	IRAJ RANJBAR, P.E.
DWG NO. :	M-105
SHEET NO.	58 OF 147

PUBLIC WORKS AND ENGINEERING
ACCEPTED & FILED
49061
CITY DRAWING NUMBER
HOUSTON, TEXAS

WARNING
0 1
IF THIS BAR DOES NOT MEASURE 1" THEN DRAWING IS NOT TO SCALE

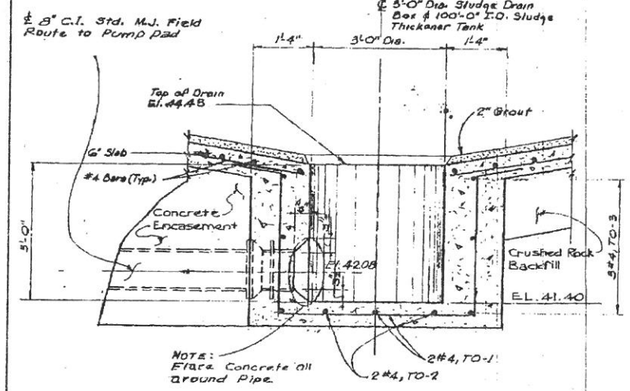

DETAIL "1"
N.T.S.

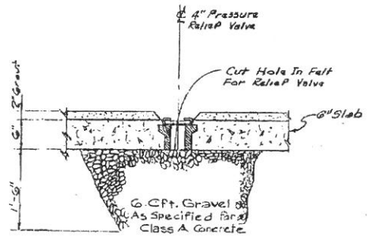

TYPICAL SECTION - PRESSURE RELIEF VALVE
Scale: 3/4" = 1'-0"

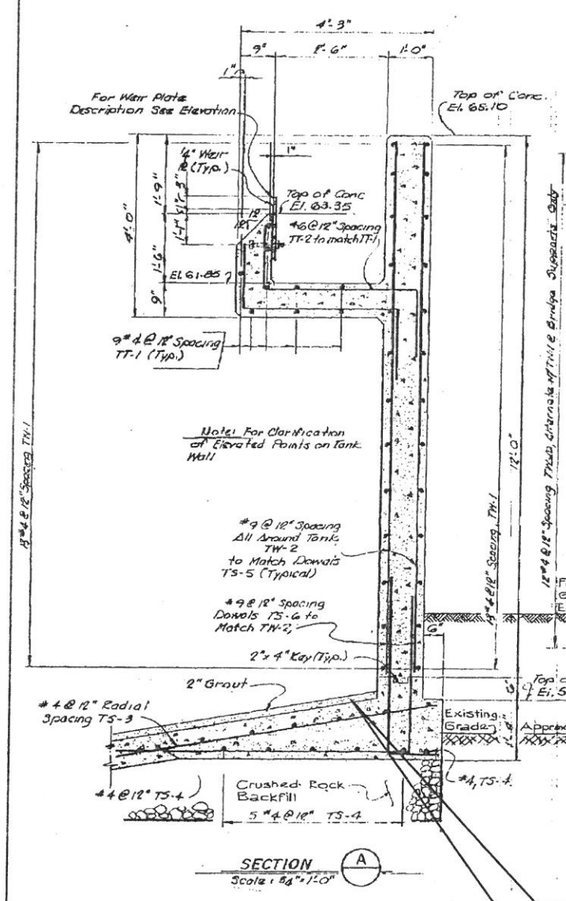

SECTION A
Scale: 3/4" = 1'-0"

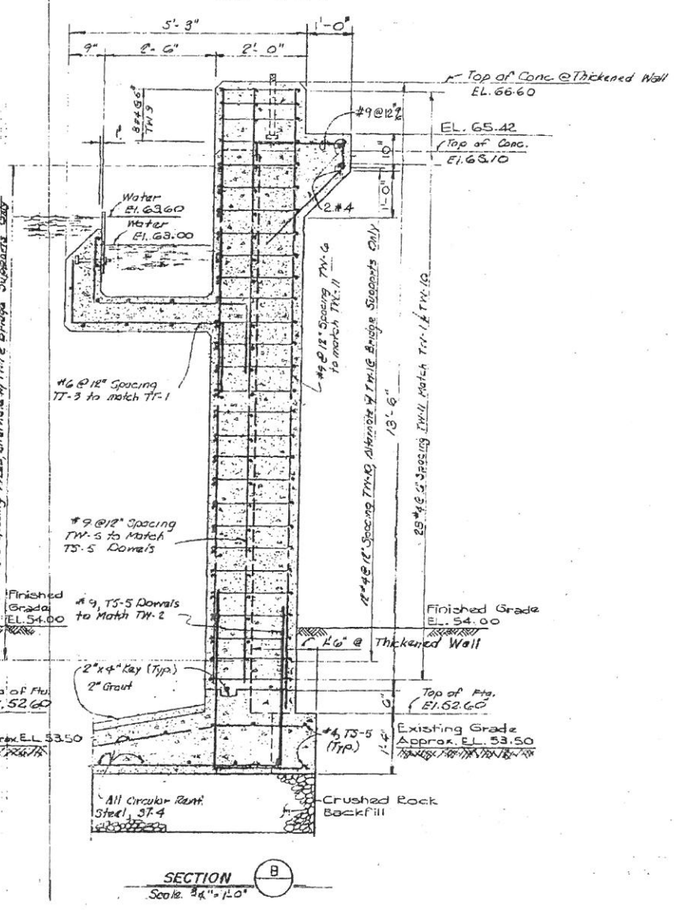

SECTION B
Scale: 3/4" = 1'-0"

REMOVE EXISTING GROUT. INSTALL NEW 2" GROUT PER EQUIPMENT SUPPLIERS RECOMMENDATION

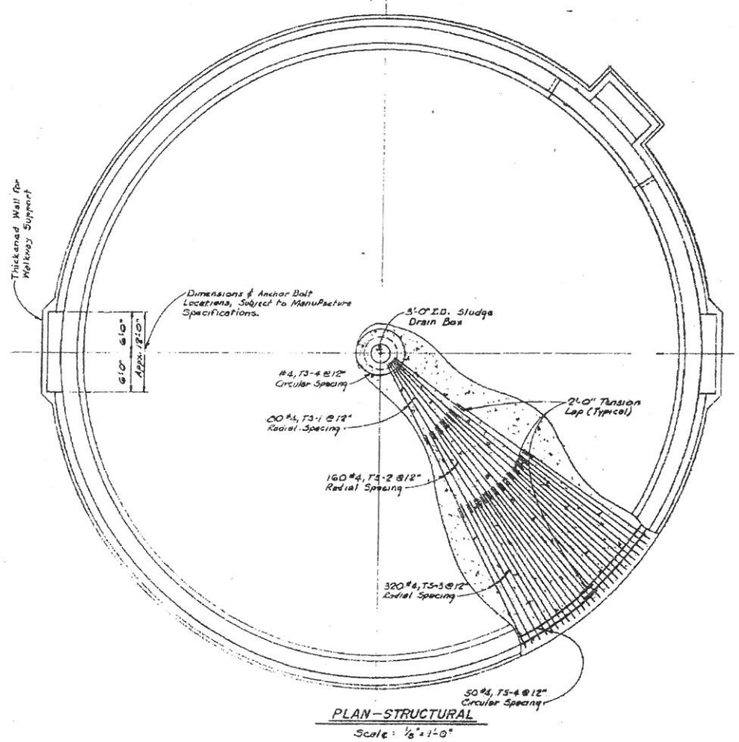

PLAN - STRUCTURAL
Scale: 1/8" = 1'-0"

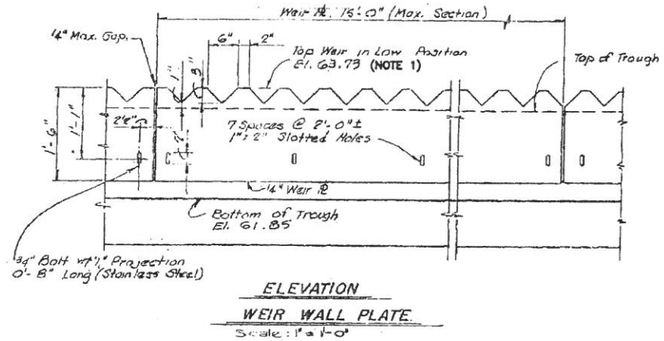

ELEVATION
WEIR WALL PLATE
Scale: 1" = 1'-0"

REPLACE WITH NEW S.S. WEIR PLATE

DO NOT USE ELEVATIONS SHOWN ON THIS DRAWING FIELD VERIFY ALL ELEVATIONS

NOTES

1. TOP OF WEIR ELEVATION SHALL BE THE SAME AS TOP OF WEIR ELEVATION IN EXISTING THICKENER NO. 2.

TO ARRANGE FOR LINES TO BE TURNED OFF OR MOVED, CALL CENTERPOINT AT 713-207-7777.

PRIVATE UTILITY LINES SHOWN
AT LEAST 48 HOURS BEFORE EXCAVATING IN STREET R.O.W. OR EASEMENTS CALL THE LONE STAR NOTIFICATION 713-223-4567.

Date:

CenterPoint Energy/Electric Facilities (Approved only for crossing underground ductlines, unless otherwise noted.) Valid at time of review only.

Date:

SBC Approved for underground conduit facilities only. Signature valid for one year.

Date:

CenterPoint Energy/Gas Facilities (Gas service lines are not shown)

No.	Date	Revisions	App.

STATE OF TEXAS
RAMESH KALLURI
68078
REGISTERED PROFESSIONAL ENGINEER
Ramesh Kalluri
9/19/2011

KGI Kalluri Group, Inc.
Consulting Engineers & Project Managers
TBPE Registration No. F-665
10497 Town & Country Way, Suite 220
Houston, Texas 77024
Phone: (713)-365-9288

Binkley & Barfield, Inc
consulting engineers
Texas Registration Number F-257
1710 Seamist Drive
Houston, Texas 77008-3189
(713) 869-3433

SURVEYED BY: AMANI ENG. | FIELD BOOK NO. : P-5486

CITY OF HOUSTON
DEPARTMENT OF PUBLIC WORKS AND ENGINEERING

ALMEDA SIMS WWTP & SPF IMPROVEMENTS PACKAGE II

EXISTING SLUDGE THICKENER DETAILS

FILE NO:	-
WBS: R-000298-0005-4	
DRAWING SCALE	
N.T.S.	
CITY OF HOUSTON PM	
IRAJ RANJBAR, P.E.	
DWG NO. :	M-106
SHEET NO. 59 OF 147	

PUBLIC WORKS AND ENGINEERING ACCEPTED & FILED
49061
CITY DRAWING NUMBER
HOUSTON, TEXAS

WARNING
0 1
IF THIS BAR DOES NOT MEASURE 1" THEN DRAWING IS NOT TO SCALE

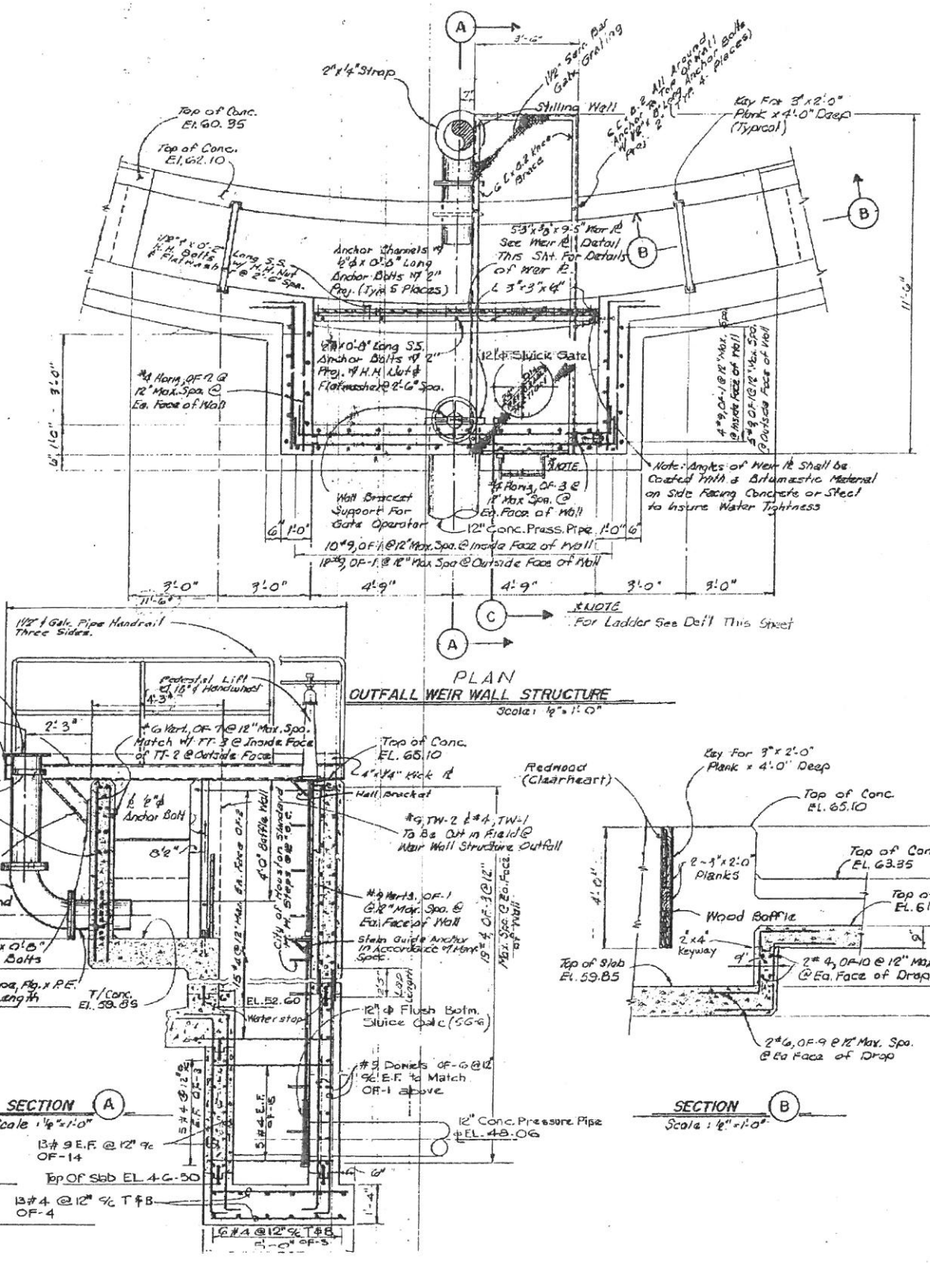

PLAN

OUTFALL WEIR WALL STRUCTURE

Scale: 1/4"=1'-0"

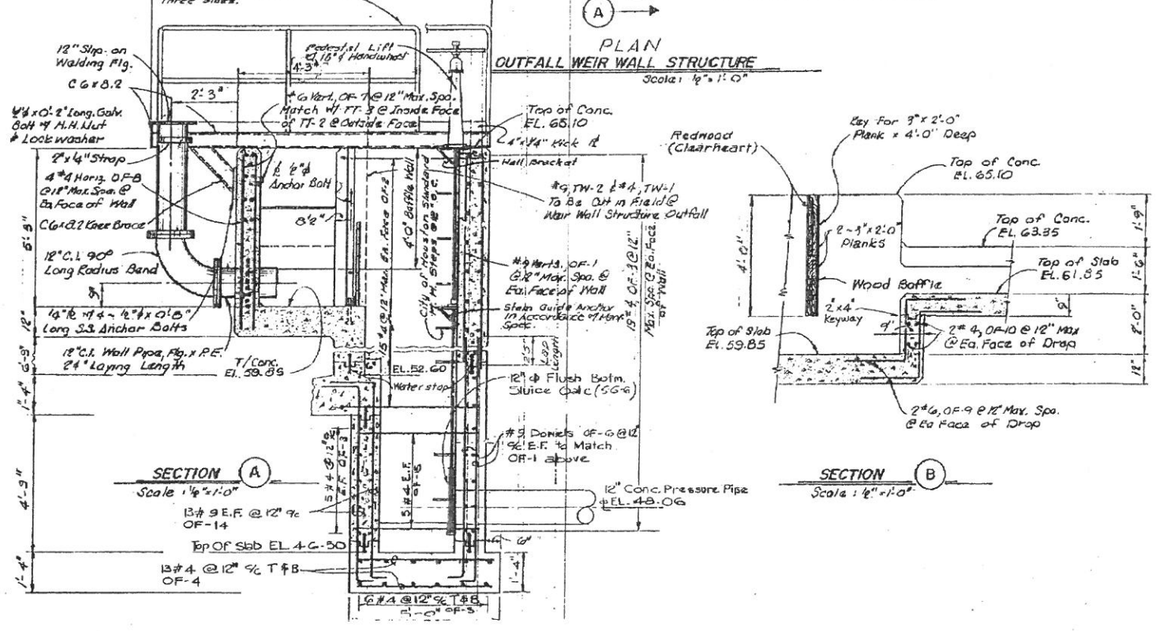

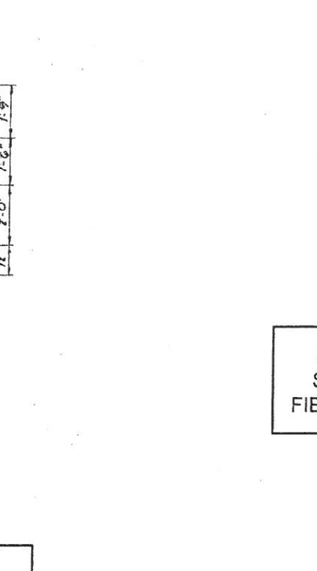

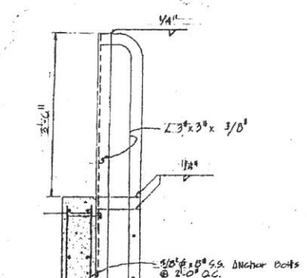

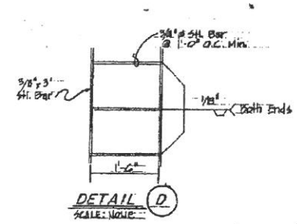

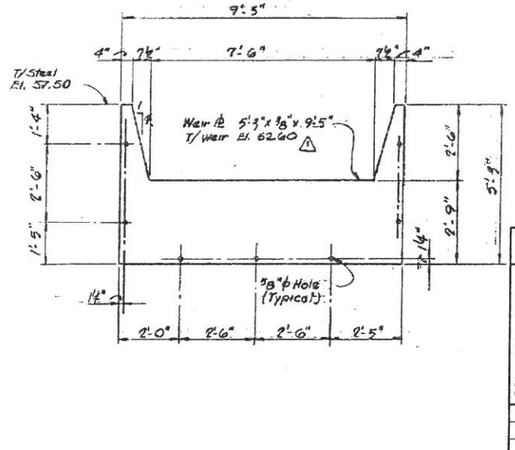

DO NOT USE ELEVATIONS SHOWN ON THIS DRAWING FIELD VERIFY ALL ELEVATIONS

FOR INFORMATION ONLY

WARNING
0 1
IF THIS BAR DOES NOT MEASURE 1" THEN DRAWING IS NOT TO SCALE

TO ARRANGE FOR LINES TO BE TURNED OFF OR MOVED, CALL CENTERPOINT AT 713-207-7777.

PRIVATE UTILITY LINES SHOWN
AT LEAST 48 HOURS BEFORE EXCAVATING IN STREET R.O.W. OR EASEMENTS CALL THE LONE STAR NOTIFICATION 713-223-4567.

Date:
CenterPoint Energy/Electric Facilities
(Approved only for crossing underground ductlines, unless otherwise noted.)
Valid at time of review only.

Date:
SBC Approved for underground conduit facilities only.
Signature valid for one year.

Date:
CenterPoint Energy/Gas Facilities
(Gas service lines are not shown)

No.	Date	Revisions	App

STATE OF TEXAS
RAMESH KALLURI
68078
REGISTERED PROFESSIONAL ENGINEER
Ramesh Kalluri
9/19/2011

KGI Kalluri Group, Inc.
Consulting Engineers & Project Managers
TBPE Registration No. F-685
10497 Town & Country Way, Suite 220
Houston, Texas 77024
Phone: (713)-365-9288

Binkley & Barfield, Inc
consulting engineers
Texas Registration Number F-257
1710 Seamist Drive
Houston, Texas 77008-3189
(713) 869-3433

SURVEYED BY: AMANI ENG. | FIELD BOOK NO. : P-5486

CITY OF HOUSTON
DEPARTMENT OF PUBLIC WORKS AND ENGINEERING

ALMEDA SIMS WWTP & SPF IMPROVEMENTS PACKAGE II

EXISTING SLUDGE THICKENER DETAILS

FILE NO:	–
WBS: R-000298-0005-4	
DRAWING SCALE	N.T.S.
CITY OF HOUSTON PM	IRAJ RANJBAR, P.E.
DWG NO. :	M-107
SHEET NO.	60 OF 147

PUBLIC WORKS AND ENGINEERING
ACCEPTED & FILED
49061
CITY DRAWING NUMBER
HOUSTON, TEXAS

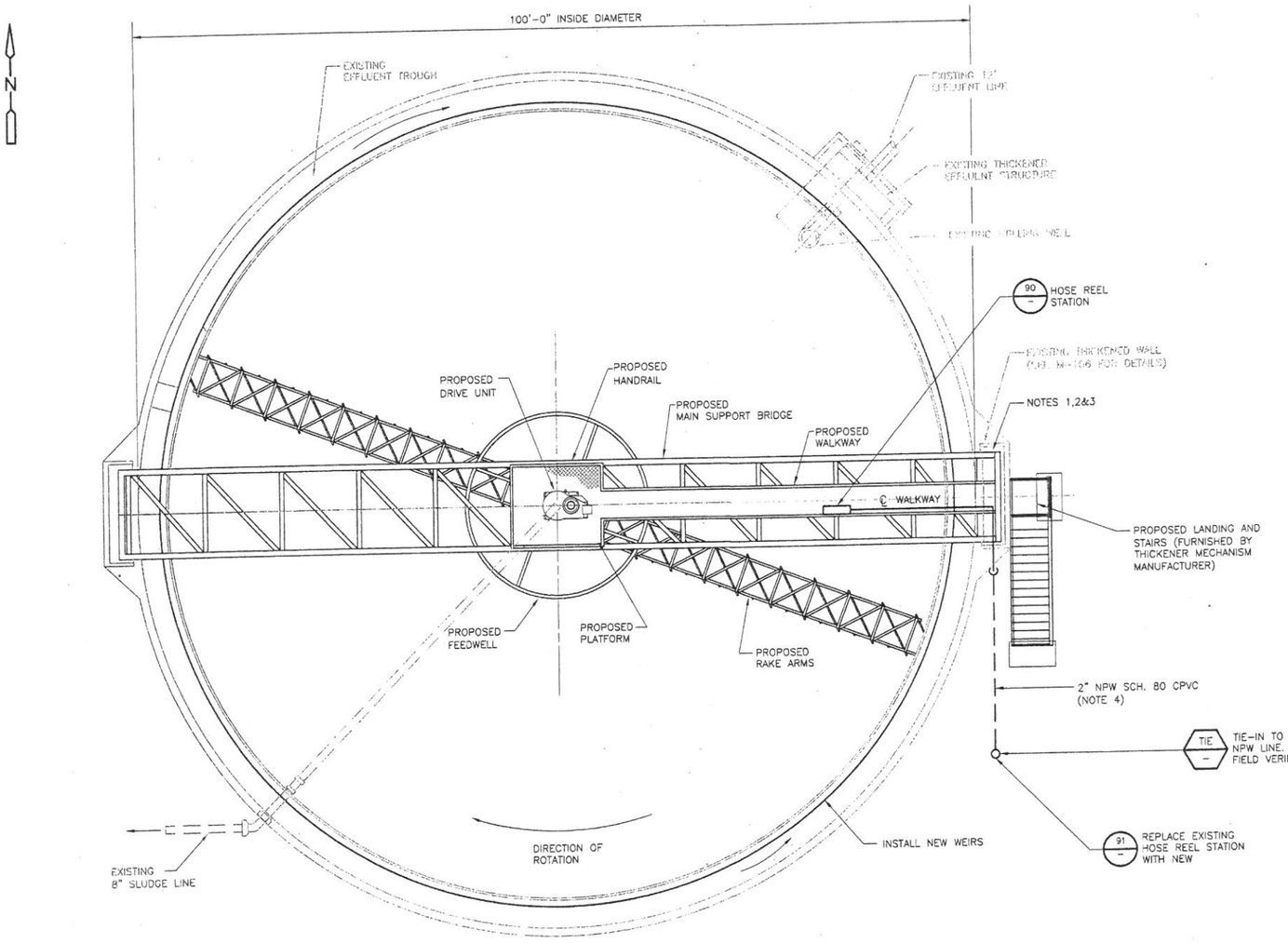

PLAN
SCALE: 1/8"=1'-0"

NOTES

1. ALL DIMENSIONS AND ELEVATIONS SHOWN ARE BASED ON EXISTING RECORD DRAWINGS. CONTRACTOR SHALL FIELD VERIFY ALL DIMENSIONS INCLUDING ELEVATIONS PRIOR TO THE START OF ANY MATERIAL FABRICATION. INCLUDE THE COST OF SAME IN THE BID PRICE.
2. THE ENTIRE WEIGHT OF PROPOSED THICKENER STEEL STRUCTURE SHALL REST ON EXISTING THICKENED WALLS. PROVIDE ANCHOR BOLTS AS REQUIRED.
3. PRIOR TO START OF CONSTRUCTION, CONTRACTOR SHALL FIELD VERIFY DIMENSIONS OF THE EXISTING THICKENER, LOCATION OF EXISTING PIPING, ETC. FURNISH THIS INFORMATION TO EQUIPMENT SUPPLIER FOR DESIGN OF THEIR EQUIPMENT INCLUDING THE LOCATION AND THE ELEVATION OF EXISTING STAIRS. IN ADDITION, CONTRACTOR SHALL SUBMIT A SHOP DRAWING SHOWING ALL OF THE PROPOSED EQUIPMENT, PIPING, SUPPORTS AND TIE-INS IN RELATION TO THE EXISTING STRUCTURE FOR OWNER'S REVIEW AND APPROVAL. THE DRAWINGS SHALL BE PREPARED IN AUTOCAD R-2003 OR HIGHER. INCLUDE COST OF SAME IN THE BID PRICE.
4. INSULATE ALL ABOVE-GROUND NPW LINES FOR FREEZE PROTECTION.

TO ARRANGE FOR LINES TO BE TURNED OFF OR MOVED, CALL CENTERPOINT AT 713-207-7777.

PRIVATE UTILITY LINES SHOWN
AT LEAST 48 HOURS BEFORE EXCAVATING IN STREET R.O.W. OR EASEMENTS CALL THE LONE STAR NOTIFICATION 713-223-4567.

Date:

CenterPoint Energy/Electric Facilities
(Approved only for crossing underground ductlines, unless otherwise noted.)
Void at time of review only.

Date:

SBC Approved for underground conduit facilites only.
Signature valid for one year.

Date:

CenterPoint Energy/Gas Facilities
(Gas service lines are not shown)

No.	Date	Revisions	App.

STATE OF TEXAS
RAMESH KALLURI
65078
REGISTERED PROFESSIONAL ENGINEER
Ramesh Kalluri
9/19/2011

KGI Kalluri Group, Inc.
Consulting Engineers & Project Managers
TBPE Registration No. F-665
10497 Town & Country Way, Suite 220
Houston, Texas 77024
Phone: (713)-365-9288

Binkley & Barfield, Inc
consulting engineers
Texas Registration Number F-257
1710 Seamist Drive
Houston, Texas 77008-3189
(713) 869-3433

SURVEYED BY: AMANI ENG. | FIELD BOOK NO. : P-5486

CITY OF HOUSTON
DEPARTMENT OF PUBLIC WORKS AND ENGINEERING

ALMEDA SIMS WWTP & SPF IMPROVEMENTS PACKAGE II

SLUDGE THICKENER
PROPOSED IMPROVEMENTS
SHEET 1 OF 2

FILE NO:	-
WBS:	R-000298-0005-4
DRAWING SCALE	N.T.S.
CITY OF HOUSTON PM	IRAJ RANJBAR, P.E.
DWG NO. :	M-108
SHEET NO.	61 OF 147

ACCEPTED & FILED
49061
CITY DRAWING NUMBER
HOUSTON, TEXAS

WARNING
0 1
IF THIS BAR DOES NOT MEASURE 1" THEN DRAWING IS NOT TO SCALE

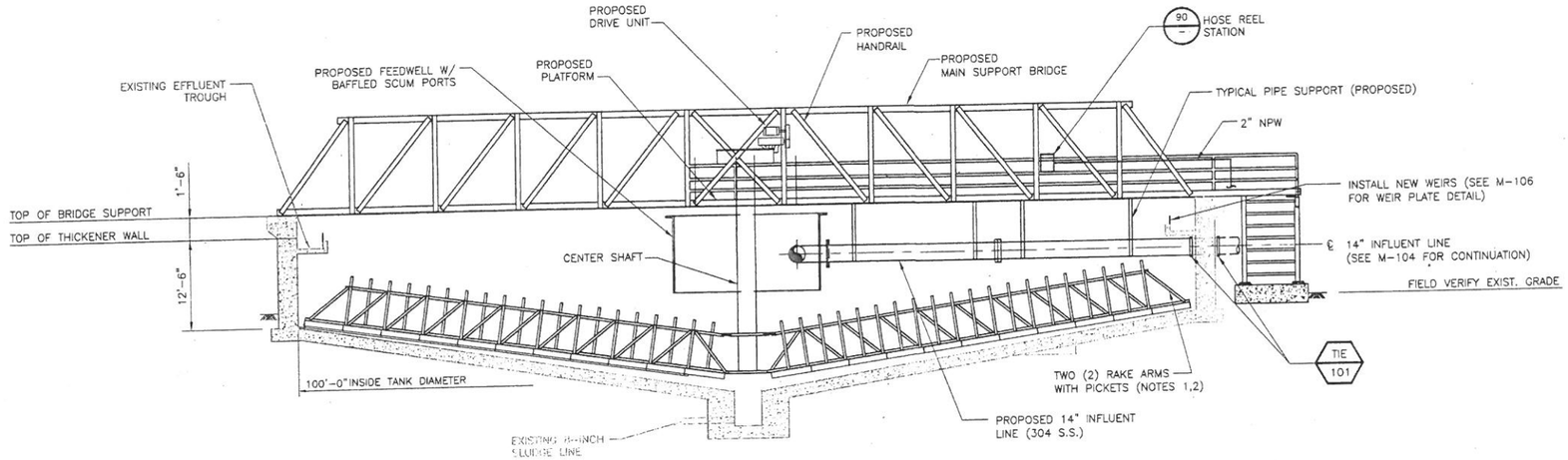

SECTIONAL ELEVATION
SCALE: 1/8"=1'-0"

NOTES

1. PICKETS SHALL BE SIZED NOT TO INTERFERE WITH PROPOSED INFLUENT PIPE.
2. REMOVE EXISTING GROUT AND INSTALL MINIMUM 2-INCHES OF NEW GROUT PER EQUIPMENT SUPPLIER'S RECOMMENDATIONS.

TO ARRANGE FOR LINES TO BE TURNED OFF OR MOVED, CALL CENTERPOINT AT 713-207-7777.

PRIVATE UTILITY LINES SHOWN
AT LEAST 48 HOURS BEFORE EXCAVATING IN STREET R.O.W. OR EASEMENTS CALL THE LONE STAR NOTIFICATION 713-223-4567.

Date:

CenterPoint Energy/Electric Facilities
(Approval only for crossing underground ductlines, unless otherwise noted.)
Valid at time of review only.

Date:

SBC Approved for underground conduit facilites only.
Signature valid for one year.

Date:

CenterPoint Energy/Gas Facilities
(Gas service lines are not shown)

No.	Date	Revisions	Init.

STATE OF TEXAS
RAMESH KALLURI
68078
REGISTERED PROFESSIONAL ENGINEER
Ramesh Kalluri
9/19/2011

KGI Kalluri Group, Inc.
Consulting Engineers & Project Managers
TBPE Registration No. F-665
10497 Town & Country Way, Suite 220
Houston, Texas 77024
Phone: (713)-365-9288

Binkley & Barfield, Inc
consulting engineers
Texas Registration Number F-257
1710 Seamist Drive
Houston, Texas 77008-3189
(713) 869-3433

SURVEYED BY: AMANI ENG. | FIELD BOOK NO. : P-5486

CITY OF HOUSTON
DEPARTMENT OF PUBLIC WORKS AND ENGINEERING

ALMEDA SIMS WWTP & SPF IMPROVEMENTS PACKAGE II

SLUDGE THICKENER
PROPOSED IMPROVEMENTS
SHEET 2 OF 2

FILE NO:	-
WBS: R-000298-0005-4	
DRAWING SCALE	
N.T.S.	
CITY OF HOUSTON PM	
IRAJ RANJBAR, P.E.	
DWG NO. :	M-109
SHEET NO.	62 OF 147

ACCEPTED & FILED
49061
CITY DRAWING NUMBER

WARNING
0 1
IF THIS BAR DOES NOT MEASURE 1" THEN DRAWING IS NOT TO SCALE

NOTES

1. DEMOLISH AND REMOVE THREE (3) EXISTING THICKENED ABOVE GROUND SLUDGE PUMPS AND ASSOCIATED PIPING AS SHOWN IN THE PHOTOS. CONCRETE PAD TO REMAIN IN PLACE.
2. REMOVE ALL ELECTRICAL CONDUITS AND WIRE TO THE RELATED EQUIPMENT.
3. CONTRACTOR SHALL DISPOSE OF THE DEMOLISHED MATERIAL OFF-SITE AT NO ADDITIONAL COST TO THE OWNER.
4. REMOVE PIPING TO THE FIRST UNDERGROUND ELBOW AND TERMINATE WITH A PLUG IN EXISTING PIPE.

DEMO THREE(3) EXISTING THICKENED SLUDGE PUMPS

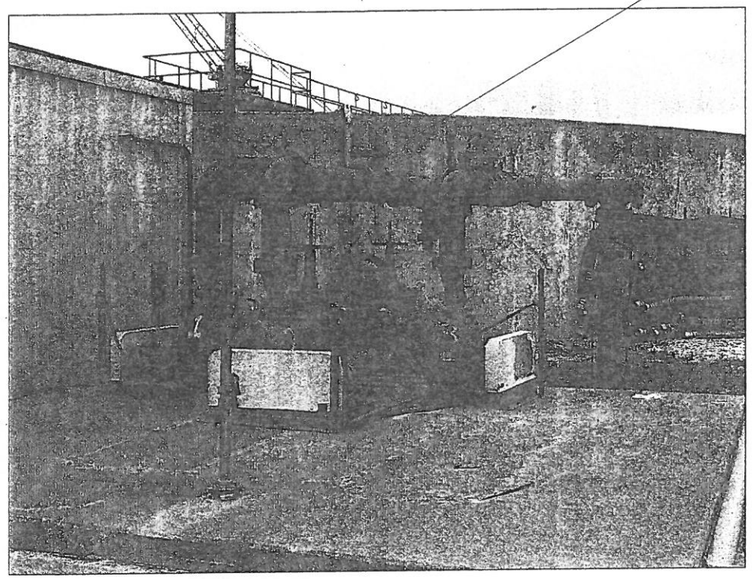

PHOTO 1-EXISTING THICKENED SLUDGE PUMPS

SCALE: N.T.S.

NOTE 4

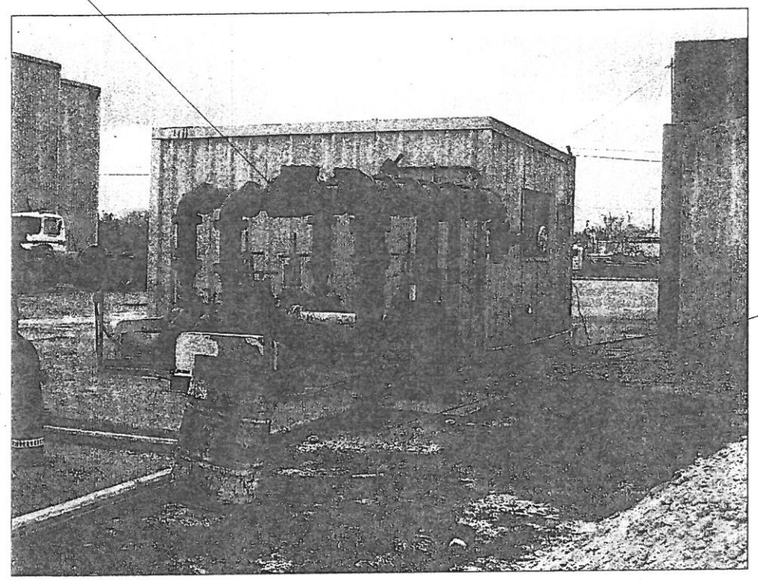

PHOTO 2-EXISTING THICKENED SLUDGE PUMPS

SCALE: N.T.S.

WARNING

0 1

IF THIS BAR DOES NOT MEASURE 1" THEN DRAWING IS NOT TO SCALE

TO ARRANGE FOR LINES TO BE TURNED OFF OR MOVED, CALL CENTERPOINT AT 713-207-7777.

PRIVATE UTILITY LINES SHOWN

AT LEAST 48 HOURS BEFORE EXCAVATING IN STREET R.O.W. OR EASEMENTS CALL THE LONE STAR NOTIFICATION 713-223-4567.

Date:

CenterPoint Energy/Electric Facilities
(Approved only for crossing underground ductlines, unless otherwise noted.) Valid at time of review only.

Date:

SBC Approved for underground conduit facilities only. Signature valid for one year.

Date:

CenterPoint Energy/Gas Facilities
(Gas service lines are not shown)

No.	Date	Revisions	App.

STATE OF TEXAS
RAMESH KALLURI
68078
REGISTERED PROFESSIONAL ENGINEER
Ramesh Kalluri
9/19/2011

KGI Kalluri Group, Inc.
Consulting Engineers & Project Managers
TBPE Registration No. F-685
10497 Town & Country Way, Suite 220
Houston, Texas 77024
Phone: (713)-365-9288

Binkley & Barfield, Inc
consulting engineers
Texas Registration Number F-257
1710 Seamist Drive
Houston, Texas 77008-3189
(713) 869-3433

SURVEYED BY: AMANI ENG. | FIELD BOOK NO. : P-5486

CITY OF HOUSTON
DEPARTMENT OF PUBLIC WORKS AND ENGINEERING

ALMEDA SIMS WWTP & SPF IMPROVEMENTS PACKAGE II

THICKENED SLUDGE PUMPS DEMOLITION

FILE NO:	-
WBS: R-000298-0005-4	
DRAWING SCALE	
N.T.S.	
CITY OF HOUSTON PM	
IRAJ RANJBAR, P.E.	
DWG NO. : M-110	
SHEET NO. 63 OF 147	

PUBLIC WORKS AND ENGINEERING
ACCEPTED & FILED
49061
CITY DRAWING NUMBER
HOUSTON, TEXAS

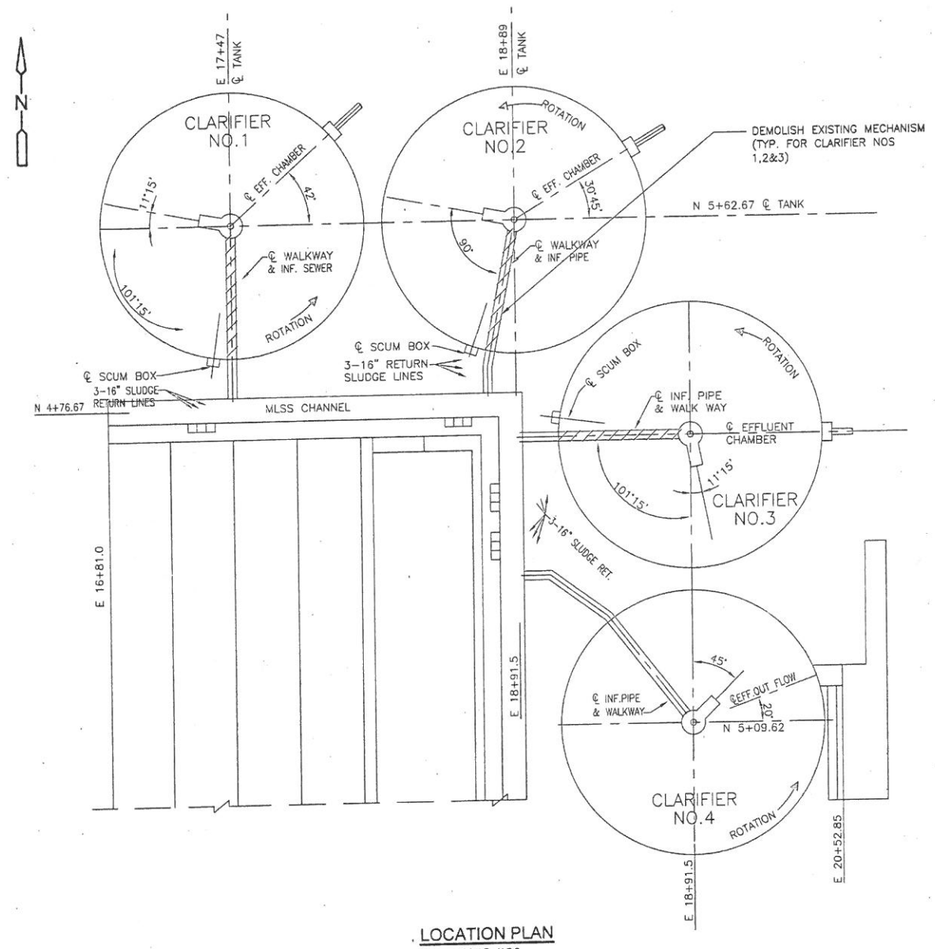

LOCATION PLAN
SCALE: N.T.S.

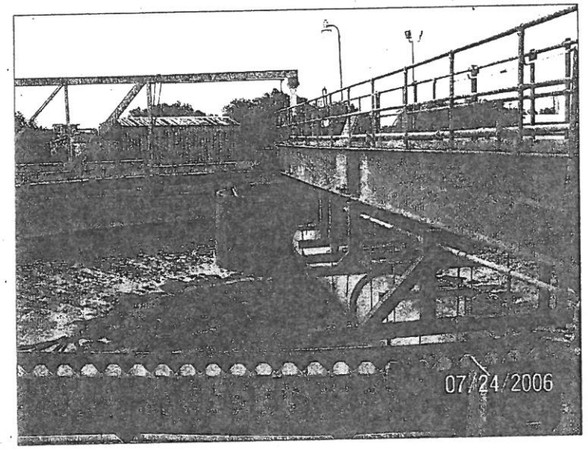

PHOTO 1 - EXISTING CLARIFIER
SCALE: N.T.S.

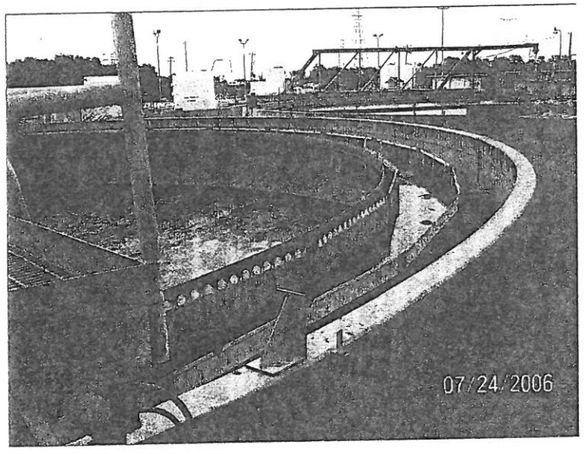

PHOTO 2 - EXISTING CLARIFIER
SCALE: N.T.S.

WARNING
0 1
IF THIS BAR DOES NOT MEASURE 1" THEN DRAWING IS NOT TO SCALE

TO ARRANGE FOR LINES TO BE TURNED OFF OR MOVED, CALL CENTERPOINT AT 713-207-7777.

PRIVATE UTILITY LINES SHOWN
AT LEAST 48 HOURS BEFORE EXCAVATING IN STREET R.O.W. OR EASEMENTS CALL THE LONE STAR NOTIFICATION 713-223-4567.

Date:

CenterPoint Energy/Electric Facilities
(Approved only for crossing underground ductlines, unless otherwise noted.)
Valid at time of review only.

Date:

SBC Aporoved for underground conduit facilites only.
Signature valid for one year.

Date:

CenterPoint Energy/Gas Facilities
(Gas service lines are not shown)

No.	Date	Revisions	App.

STATE OF TEXAS
RAMESH KALLURI
68078
REGISTERED PROFESSIONAL ENGINEER
Ramesh Kalluri
9/19/2011

KGI Kalluri Group, Inc.
Consulting Engineers & Project Managers
TBPE Registration No. F-665
10497 Town & Country Way, Suite 220
Houston, Texas 77024
Phone: (713)-365-9288

Binkley & Barfield, Inc
consulting engineers
Texas Registration Number F-257
1710 Seamist Drive
Houston, Texas 77008-3189
(713) 869-5433

SURVEYED BY: AMANI ENG. | FIELD BOOK NO. : P-5486

CITY OF HOUSTON
DEPARTMENT OF PUBLIC WORKS AND ENGINEERING

ALMEDA SIMS WWTP & SPF IMPROVEMENTS PACKAGE II

EXISTING CLARIFIERS LOCATION PLAN & ORIENTATION

FILE NO:	–
WBS: R-000298-0005-4	
DRAWING SCALE	
N.T.S.	
CITY OF HOUSTON PM	
IRAJ RANJBAR, P.E.	
DWG NO. : M-200	
SHEET NO. 64 OF 147	

PUBLIC WORKS AND ENGINEERING
ACCEPTED & FILED
49061
CITY DRAWING NUMBER
HOUSTON, TEXAS

N

(APPLICABLE FOR CL-3)

SEE DWG NO. M-200 LOCATION PLAN FOR PIPING ORIENTATION

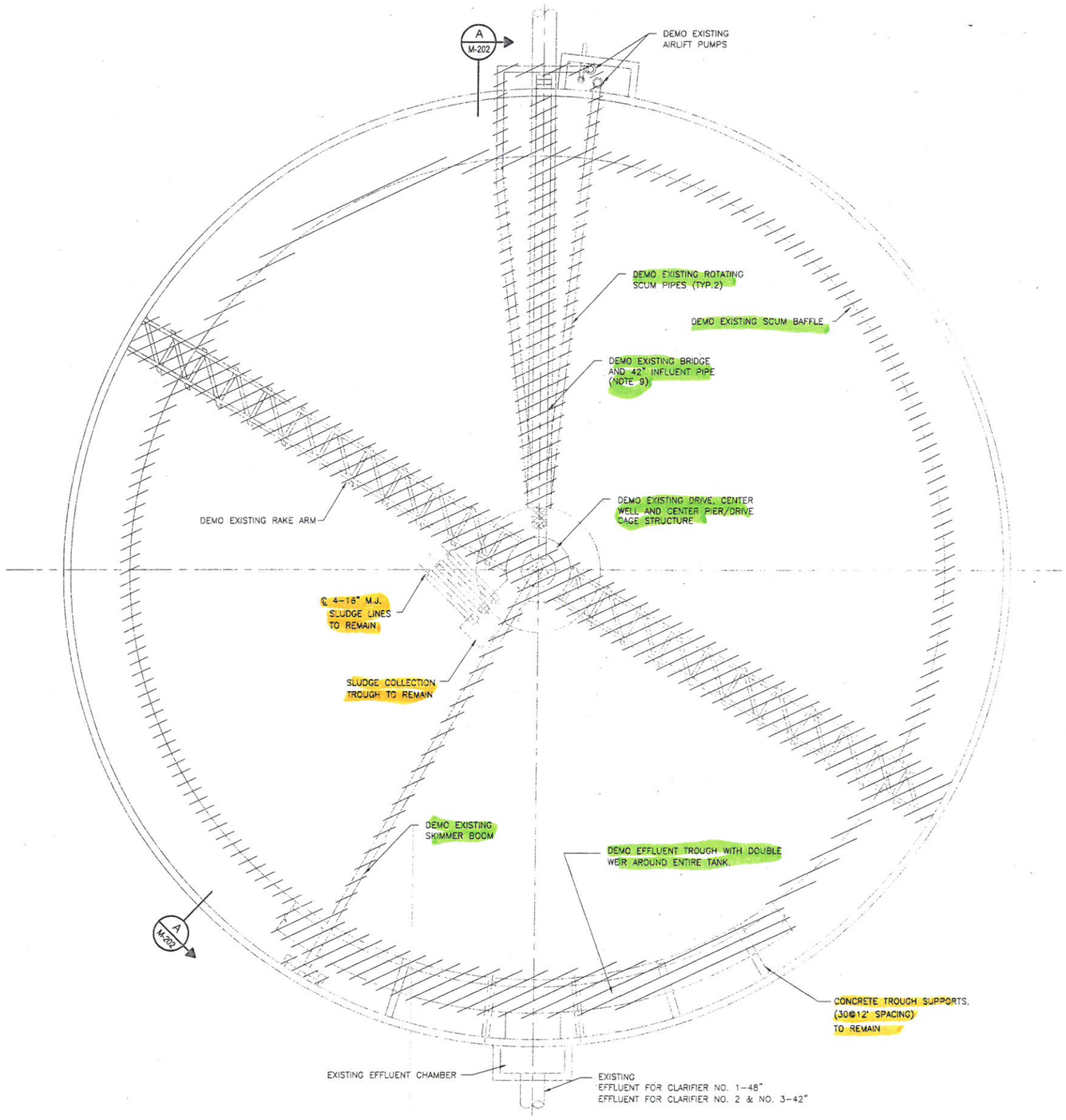

PLAN - DEMOLITION (TYP. FOR CLARIFIER NO.1, NO.2 AND NO.3)

SCALE: 1/8"= 1'-0"

8. ONLY ONE CLARIFIER CAN BE TAKEN OUT OF SERVICE AT ANY GIVEN TIME. CO-ORDINATE WITH COH OPERATIONS STAFF.
9. RETURN THE EXISTING ULTRA-SONIC FLOW METERS ON 42" INFLUENT PIPE TO OWNER. ALL ELECTRICAL INSTRUMENTATION AND CONTROL WIRING TO BE REMOVED PERMANENTLY.

NOTES

1. DEMOLISH AND REMOVE EXISTING MECHANISMS IN CLARIFIER NOS. 1, 2 AND 3. THE DEMOLITION SHALL INCLUDE BUT NOT LIMITED TO REMOVAL OF DRIVE UNIT, PLATFORM (BRIDGE), HANDRAILS, CENTER PIER, DRIVE CAGE, INFLUENT WELL, TRUSS ARMS, SKIMMER BOOM, ROTATING SCUM PIPE AND ASSOCIATED EQUIPMENT, 42-INCH INFLUENT PIPING AND ASSOCIATED SUPPORT HANGERS, EFFLUENT TROUGH WITH DOUBLE WEIR PLATES, SCUM BAFFLE, AND OTHER MISCELLANEOUS APPURTENANCES SUCH AS GROUT, AIR PIPING, WATER PIPING, ETC.
2. DEMOLISH AND REMOVE THE EXISTING AIR LIFT PUMPS ASSOCIATED WITH THE SCUM REMOVAL PIPING AND THE EXISTING SCUM BOX.
3. REMOVE LIGHTING, CONTROL PANELS AND ALL ELECTRICAL CONDUITS AND WIRE TO THE NEAREST JUNCTION BOX RELATED TO THE CLARIFIER EQUIPMENT.
4. COORDINATE WITH OWNER FOR DRAINING THE CLARIFIERS. CONTRACTOR SHALL PRESSURE WASH, CLEAN THE EXISTING CLARIFIERS PRIOR TO START OF ANY DEMOLITION WORK.
5. CONTRACTOR SHALL DISPOSE OF THE DEMOLISHED MATERIAL OFF-SITE AT NO ADDITIONAL COST TO THE OWNER.
6. SOME COMPONENTS OF THE EXISTING CLARIFIER MECHANISM SHOWN IN THE DRAWINGS COULD BE MISSING AND/OR REMOVED BY OWNER.
7. ALL ELEVATIONS SHOWN ARE BASED ON EXISTING RECORD DRAWINGS. CONTRACTOR SHALL FIELD VERIFY ALL DIMENSIONS INCLUDING ELEVATIONS PRIOR TO CONSTRUCTION.

TO ARRANGE FOR LINES TO BE TURNED OFF OR MOVED, CALL CENTERPOINT AT 713-207-7777.

PRIVATE UTILITY LINES SHOWN
AT LEAST 48 HOURS BEFORE EXCAVATING IN STREET R.O.W. OR EASEMENTS CALL THE LONE STAR NOTIFICATION 713-223-4567.

Date:
CenterPoint Energy/Electric Facilities
(Approved only for crossing underground ductlines, unless otherwise noted.)
Valid at time of review only.

Date:
SBC Approved for underground conduit facilities only.
Signature valid for one year.

Date:
CenterPoint Energy/Gas Facilities
(Gas service lines are not shown)

No.	Date	Revisions	App.

STATE OF TEXAS
RAMESH KALLURI
68078
REGISTERED PROFESSIONAL ENGINEER
Ramesh Kalluri
9/19/2011

KGI Kalluri Group, Inc.
Consulting Engineers & Project Managers
TBPE Registration No. F-565
10497 Town & Country Way, Suite 220
Houston, Texas 77024
Phone: (713)-365-9288

Binkley & Barfield, Inc
consulting engineers
Texas Registration Number F-257
1710 Seamist Drive
Houston, Texas 77008-3189
(713) 869-3433

SURVEYED BY: AMANI ENG. | FIELD BOOK NO. : P-5486

CITY OF HOUSTON
DEPARTMENT OF PUBLIC WORKS AND ENGINEERING

ALMEDA SIMS WWTP & SPF IMPROVEMENTS PACKAGE II

CLARIFIERS DEMOLITION (SHEET 1 OF 2)

FILE NO:	-
WBS: R-000298-0005-4	
DRAWING SCALE	
N.T.S.	
CITY OF HOUSTON PM	
IRAJ RANJBAR, P.E.	
DWG NO. :	M-201
SHEET NO.	65 OF 147

PUBLIC WORKS AND ENGINEERING
ACCEPTED & FILED
49061
CITY DRAWING NUMBER
HOUSTON, TEXAS

WARNING
0 1
IF THIS BAR DOES NOT MEASURE 1" THEN DRAWING IS NOT TO SCALE

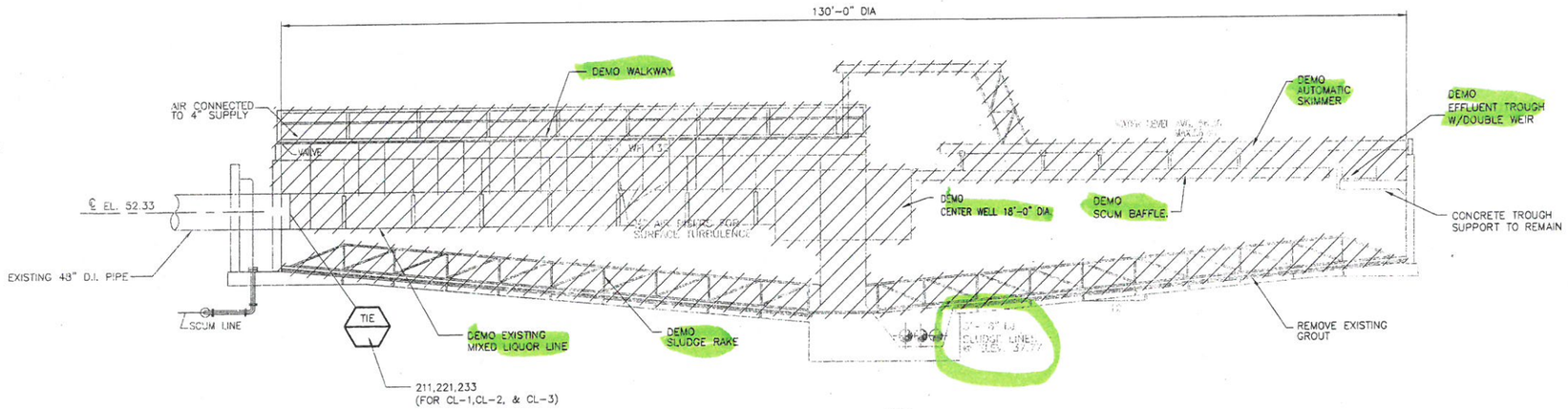

SECTION A
SCALE: 1/8"=1'-0" M-201

TO ARRANGE FOR LINES TO BE TURNED OFF OR MOVED, CALL CENTERPOINT AT 713-207-7777.

PRIVATE UTILITY LINES SHOWN
AT LEAST 48 HOURS BEFORE EXCAVATING IN STREET R.O.W. OR EASEMENTS CALL THE LONE STAR NOTIFICATION 713-223-4567.

Date:

CenterPoint Energy/Electric Facilities
(Approved only for crossing underground ductlines, unless otherwise noted.)
Valid at time of review only.

Date:

SBC Approved for underground conduit facilities only.
Signature valid for one year.

Date:

CenterPoint Energy/Gas Facilities
(Gas service lines are not shown)

No	Date	Revisions	App.

STATE OF TEXAS
RAMESH KALLURI
68078
REGISTERED PROFESSIONAL ENGINEER
Ramesh Kalluri
9/19/2011

KGI Kalluri Group, Inc.
Consulting Engineers & Project Managers
TBPE Registration No. F-665
10497 Town & Country Way, Suite 220
Houston, Texas 77024
Phone: (713)-365-9288

Binkley & Barfield, Inc
consulting engineers
Texas Registration Number F-257
1710 Seamist Drive
Houston, Texas 77008-3189
(713) 869-3433

SURVEYED BY: AMANI ENG. FIELD BOOK NO. : P-5486

CITY OF HOUSTON
DEPARTMENT OF PUBLIC WORKS AND ENGINEERING

ALMEDA SIMS WWTP & SPF IMPROVEMENTS PACKAGE II

CLARIFIERS DEMOLITION (SHEET 2 OF 2)

FILE NO: –
WBS: R-000298-0005-4
DRAWING SCALE
N.T.S.
CITY OF HOUSTON PM
IRAJ RANJBAR, P.E.
DWG NO. : M-202
SHEET NO. 66 OF 147

PUBLIC WORKS AND ENGINEERING
ACCEPTED & FILED
49061
CITY DRAWING NUMBER
HOUSTON, TEXAS

WARNING
0 1
IF THIS BAR DOES NOT MEASURE 1" THEN DRAWING IS NOT TO SCALE

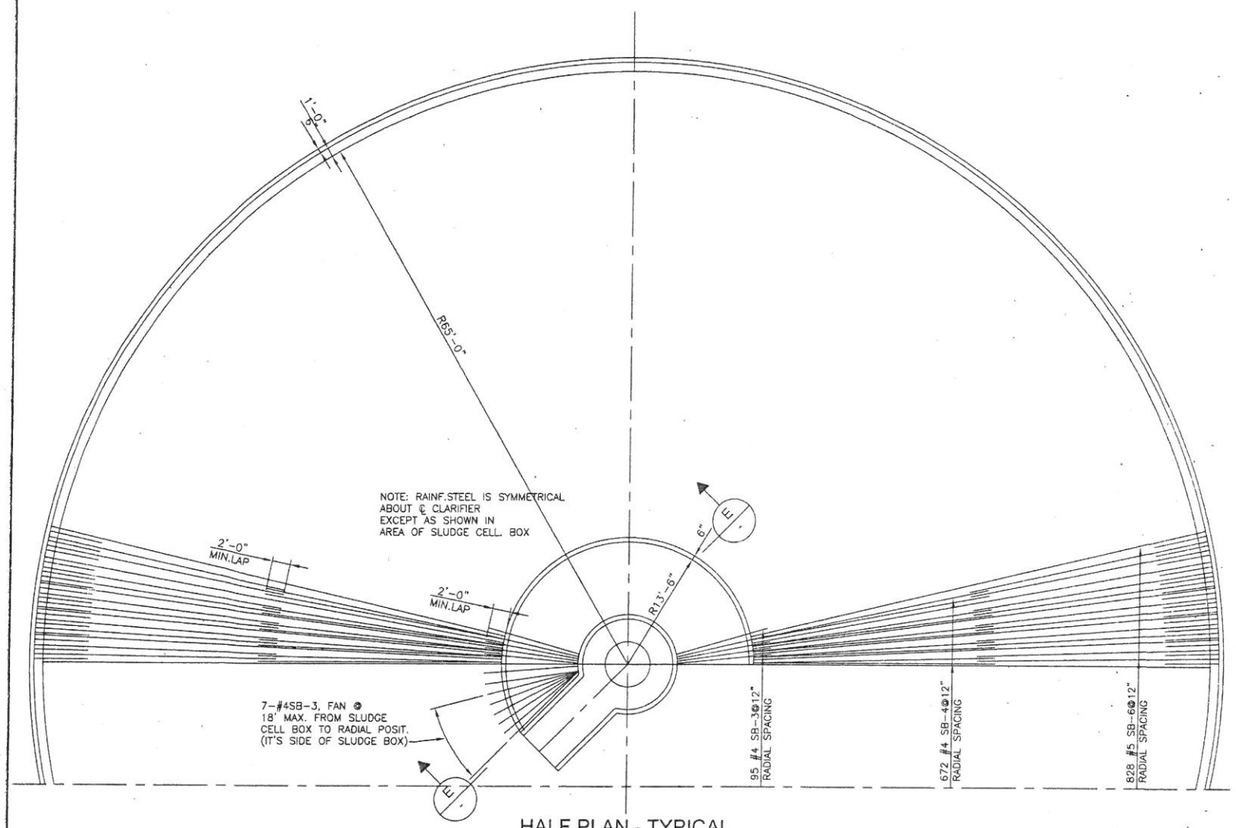

HALF PLAN - TYPICAL ALL CLARIFIERS

SCALE:1/8"=1'-0"

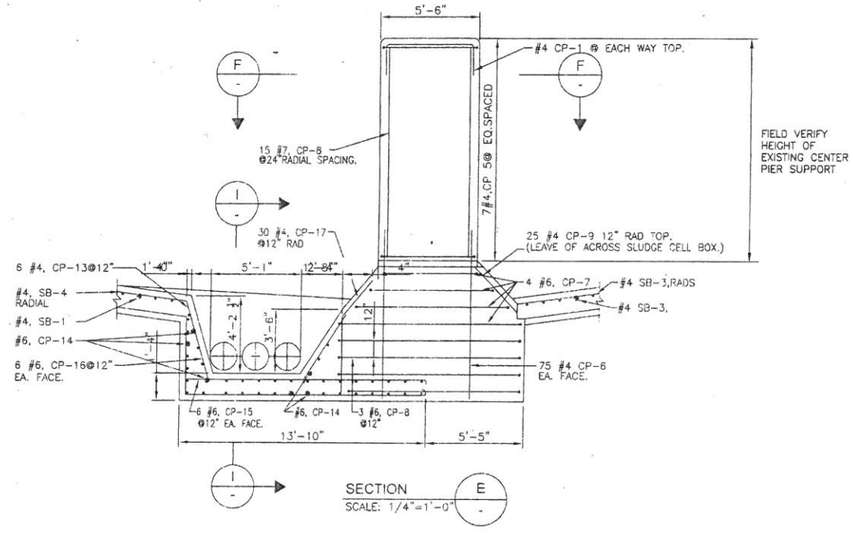

SECTION E

SCALE: 1/4"=1'-0"

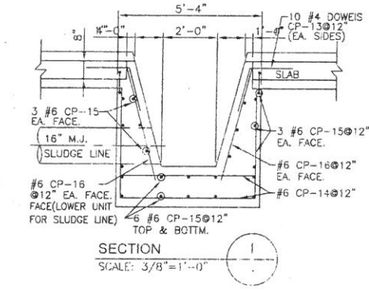

SECTION I

SCALE: 3/8"=1'-0"

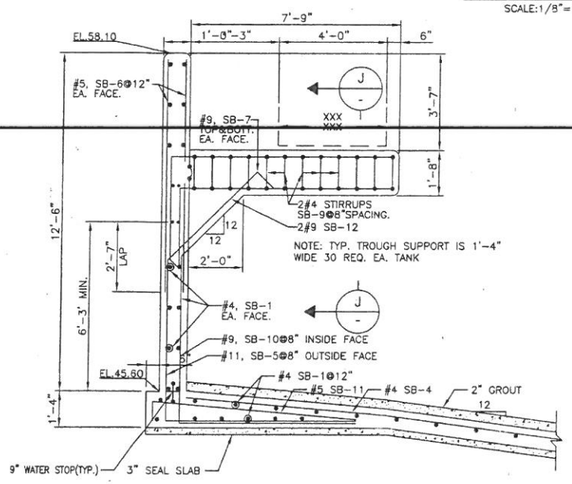

TYPICAL SECTION OF TANK WALL AT TROUGH SUPPORT

SCALE:3/8"=1'-0"

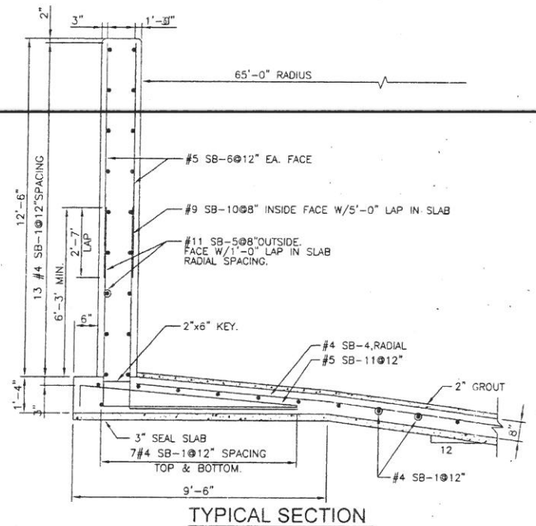

TYPICAL SECTION OF TANK WALL

SCALE:3/8"=1'-0"

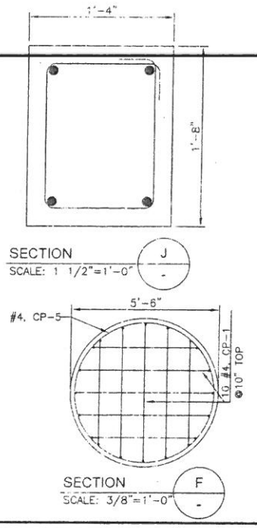

SECTION J

SCALE: 1 1/2"=1'-0"

SECTION F

SCALE: 3/8"=1'-0"

FOR INFORMATION ONLY

WARNING

0 1

IF THIS BAR DOES NOT MEASURE 1" THEN DRAWING IS NOT TO SCALE

TO ARRANGE FOR LINES TO BE TURNED OFF OR MOVED, CALL CENTERPOINT AT 713-207-7777.

PRIVATE UTILITY LINES SHOWN

AT LEAST 48 HOURS BEFORE EXCAVATING IN STREET R.O.W. OR EASEMENTS CALL THE LONE STAR NOTIFICATION 713-223-4567.

Date:

CenterPoint Energy/Electric Facilities (Approval only for crossing underground ductlines, unless otherwise noted.) Valid at time of review only.

Date:

SBC Approved for underground conduit facilities only. Signature valid for one year.

Date:

CenterPoint Energy/Gas Facilities (Gas service lines are not shown)

No.	Date	Revisions	App.

STATE OF TEXAS
RAMESH KALLURI
68078
REGISTERED PROFESSIONAL ENGINEER
9/19/2011

KGI Kalluri Group, Inc.
Consulting Engineers & Project Managers
TBPE Registration No. F-685
10497 Town & Country Way, Suite 220
Houston, Texas 77024
Phone: (713)-385-9288

Binkley & Barfield, Inc
consulting engineers
Texas Registration Number F-257
1710 Seamist Drive
Houston, Texas 77008-3139
(713) 869-3433

SURVEYED BY: AMANI ENG. | FIELD BOOK NO. : P-5486

CITY OF HOUSTON
DEPARTMENT OF PUBLIC WORKS AND ENGINEERING

ALMEDA SIMS WWTP & SPF IMPROVEMENTS PACKAGE II

CLARIFIERS EXISTING STRUCTURAL PLAN & SECTION

FILE NO:	-
WBS: R-000298-0005-4	
DRAWING SCALE	N.T.S.
CITY OF HOUSTON PM	IRAJ RANJBAR, P.E.
DWG NO. :	M-203
SHEET NO.	67 OF 147

PUBLIC WORKS AND ENGINEERING ACCEPTED & FILED 49061 CITY DRAWING NUMBER HOUSTON, TEXAS

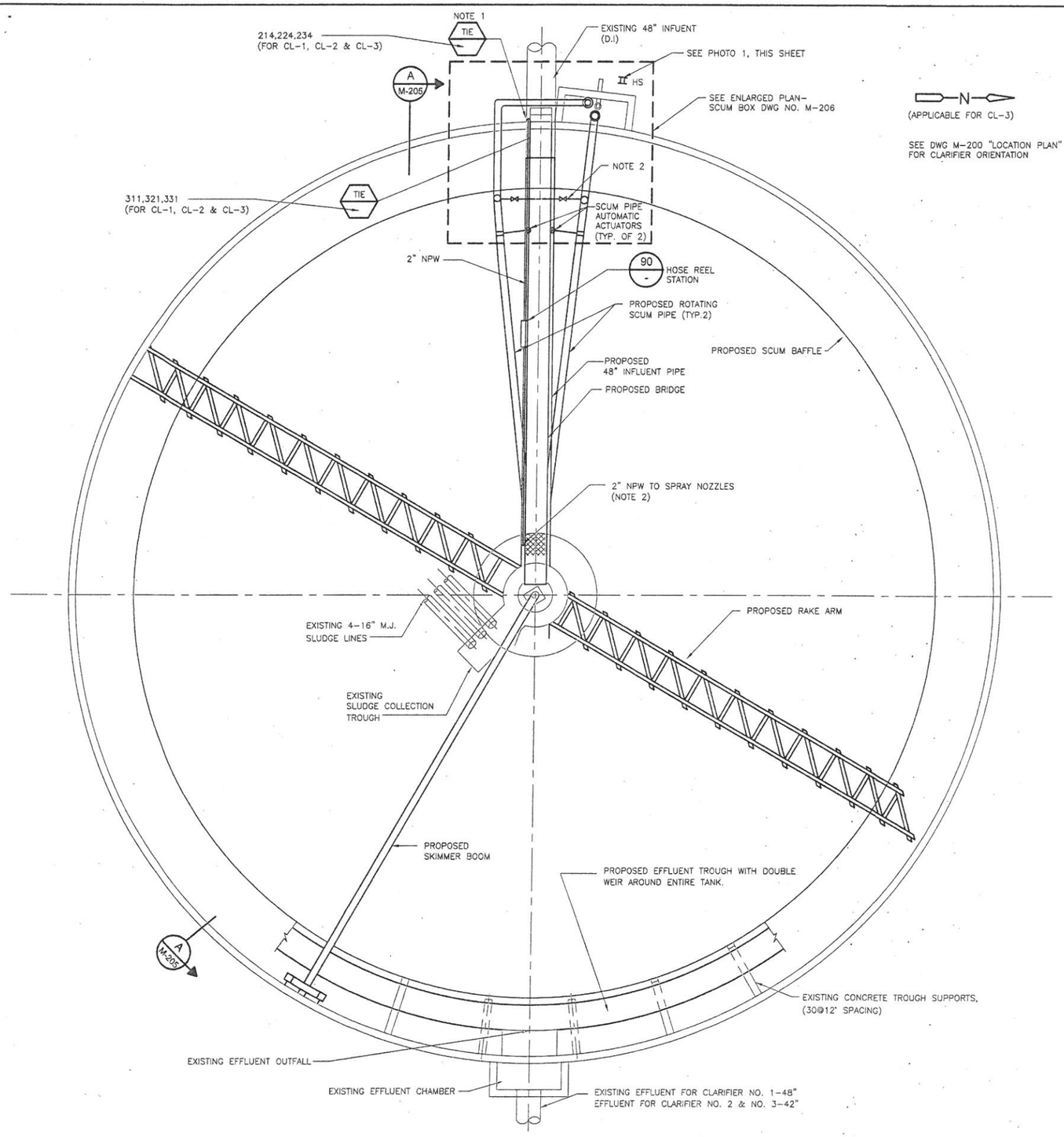

PLAN-PROPOSED IMPROVEMENTS(TYP.FOR CLARIFIER No.1,No.2 AND No.3)

1/8" = 1'-0"

N

(APPLICABLE FOR CL-3)

SEE DWG M-200 "LOCATION PLAN"
FOR CLARIFIER ORIENTATION

NOTES:

1. TIE-IN TO EXISTING 2" NPW LINE
2. PROVIDE WATER SPRAY NOZZLES AT THE FOLLOWING LOCATIONS, AS A MINIMUM:
   -CENTER WELL
   -SCUM BOXES
   -SCUM SUMP
   -BETWEEN THE TWO ROTATING SCUM PIPES
   -AT OTHER LOCATIONS RECOMMENDED BY MANUFACTURER WHERE FLOATING MATERIALS ACCUMULATE
   RUN 2" NPW(GALV STEEL) LINE WITH MANUAL ISOLATION VALVES TO EACH SPRAY NOZZLE HEADER.
3. PRIOR TO START OF CONSTRUCTION, CONTRACTOR SHALL FIELD VERIFY DIMENSIONS OF THE EXISTING CLARIFIER LOCATION AND SIZE OF EXISTING TROUGH SUPPORTS, LOCATION OF EXISTING PIPING (INFLUENT HEADER, AIR PIPING, NPW), ETC. FURNISH THIS INFORMATION TO EQUIPMENT SUPPLIER FOR DESIGN OF THEIR EQUIPMENT INCLUDING THE LOCATION AND ELEVATION OF EXISTING STAIRS. IN ADDITION, CONTRACTOR SHALL SUBMIT A SHOP DRAWING SHOWING ALL OF THE PROPOSED EQUIPMENT, PIPING, VALVES, SUPPORTS AND TIE-INS IN RELATION TO THE EXISTING STRUCTURE FOR OWNER'S REVIEW AND APPROVAL. THE DRAWING SHALL BE PREPARED IN AUTOCAD R-2003 OR HIGHER. INCLUDE THE COST OF SAME IN THE BID PRICE.
4. REPLACE EXISTING HOSE BIBB STATIONS WITH NEW HOSE BIBB STATIONS AT CLARIFIERS NO. 1, 2, 3, & 4.

91
NOTE 4
(TYP.)

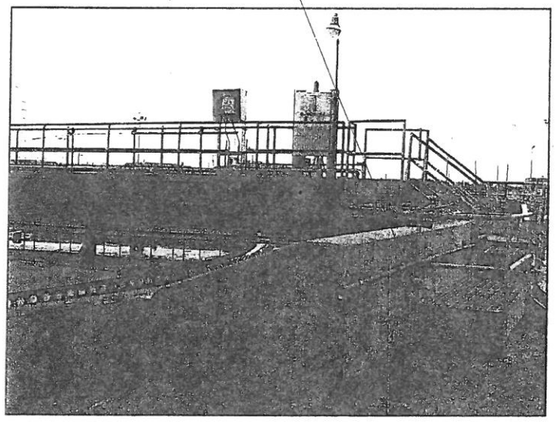

PHOTO 1 - EXISTING HOSE BIBB

N.T.S.

WARNING
0 1
IF THIS BAR DOES NOT MEASURE 1" THEN DRAWING IS NOT TO SCALE

TO ARRANGE FOR LINES TO BE TURNED OFF OR MOVED, CALL CENTERPOINT AT 713-207-7777.

PRIVATE UTILITY LINES SHOWN
AT LEAST 48 HOURS BEFORE EXCAVATING IN STREET R.O.W. OR EASEMENTS CALL THE LONE STAR NOTIFICATION 713-223-4567.

Date:
CenterPoint Energy/Electric Facilities
(Approved only for crossing underground ductlines, unless otherwise noted.)
Valid at time of review only.

Date:
SBC Approved for underground conduit facilites only.
Signature valid for one year.

Date:
CenterPoint Energy/Gas Facilities
(Gas service lines are not shown)

No.	Date	Revisions	App.

STATE OF TEXAS
RAMESH KALLURI
68078
REGISTERED PROFESSIONAL ENGINEER
Ramesh Kalluri
9/19/2011

KGI Kalluri Group, Inc.
Consulting Engineers & Project Managers
TBPE Registration No. F-665
10497 Town & Country Way, Suite 220
Houston, Texas 77024
Phone: (713)-365-9288

Binkley & Barfield, Inc
consulting engineers
Texas Registration Number F-257
1710 Seamist Drive
Houston, Texas 77008-3189
(713) 869-3433

SURVEYED BY: AMANI ENG. | FIELD BOOK NO. : P-5486

CITY OF HOUSTON
DEPARTMENT OF PUBLIC WORKS AND ENGINEERING

ALMEDA SIMS WWTP & SPF IMPROVEMENTS PACKAGE II

CLARIFIERS PROPOSED IMPROVEMENTS (SHEET 1 OF 2)

FILE NO:	-
WBS: R-000298-0005-4	
DRAWING SCALE	N.T.S.
CITY OF HOUSTON PM	IRAJ RANJBAR, P.E.
DWG NO. :	M-204
SHEET NO.	66 OF 147

PUBLIC WORKS AND ENGINEERING
ACCEPTED & FILED
49061-4
CITY DRAWING NUMBER
HOUSTON, TEXAS

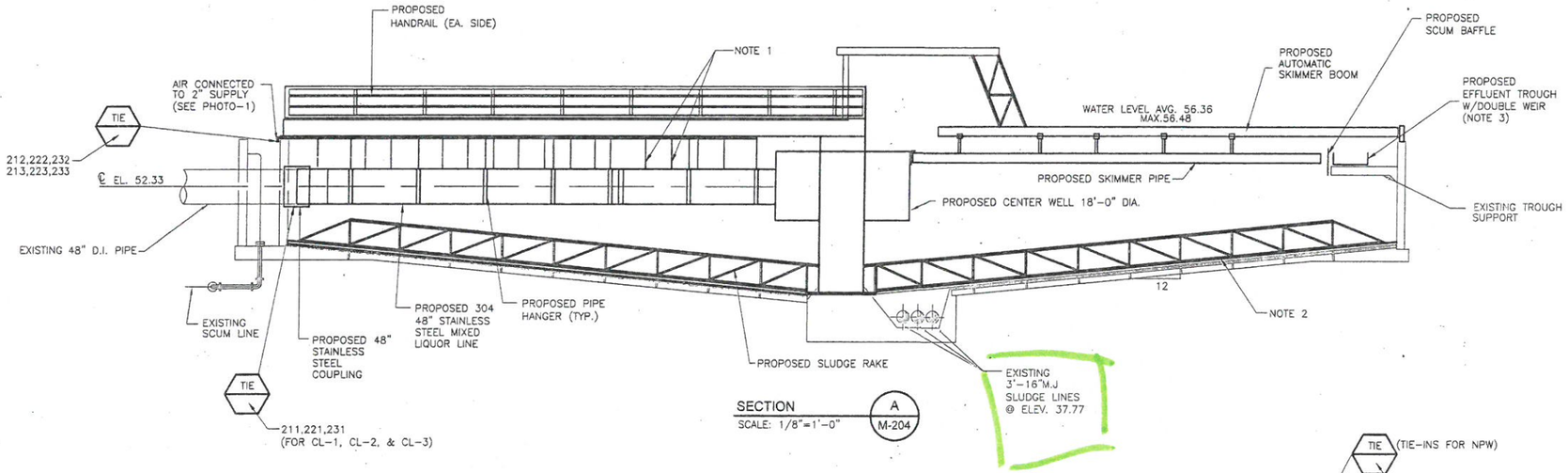

SECTION A / M-204

SCALE: 1/8"=1'-0"

NOTES:

1. PROVIDE 1/2" AIR RISER FOR SURFACE TURBULENCE ON BOTH SIDES OF BRIDGE.
2. REMOVE EXISTING GROUT AND INSTALL A MINIMUM 2-INCHES OF NEW GROUT PER EQUIPMENT SUPPLIER'S RECOMMENDATIONS.
3. THE NEW WEIRS FOR CLARIFIERS NO. 1, 2, 3, SHOULD MATCH EXACTLY THE EXISTING WEIR IN CLARIFIER No. 4 IN ELEVATION AND CONFIGURATION.

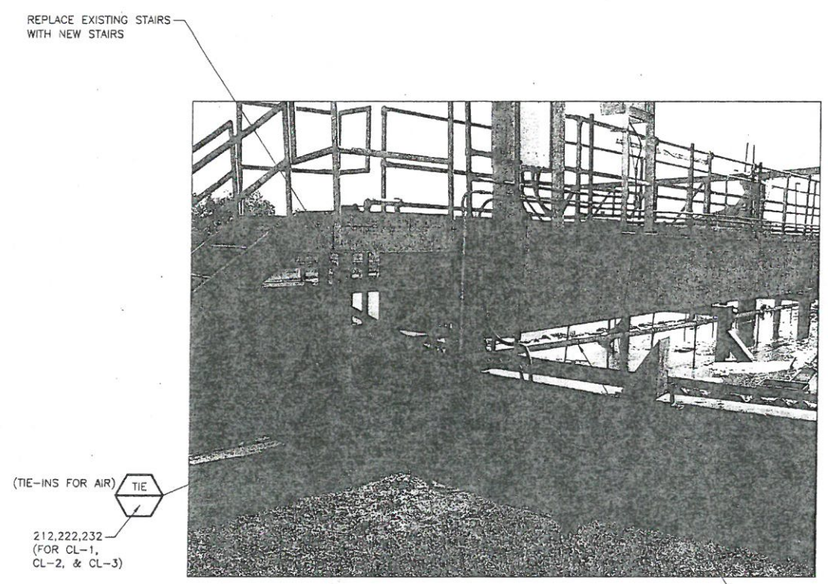

PHOTO 1- AIR PIPING FOR SURFACE TURBULENCE

SCALE: N.T.S.

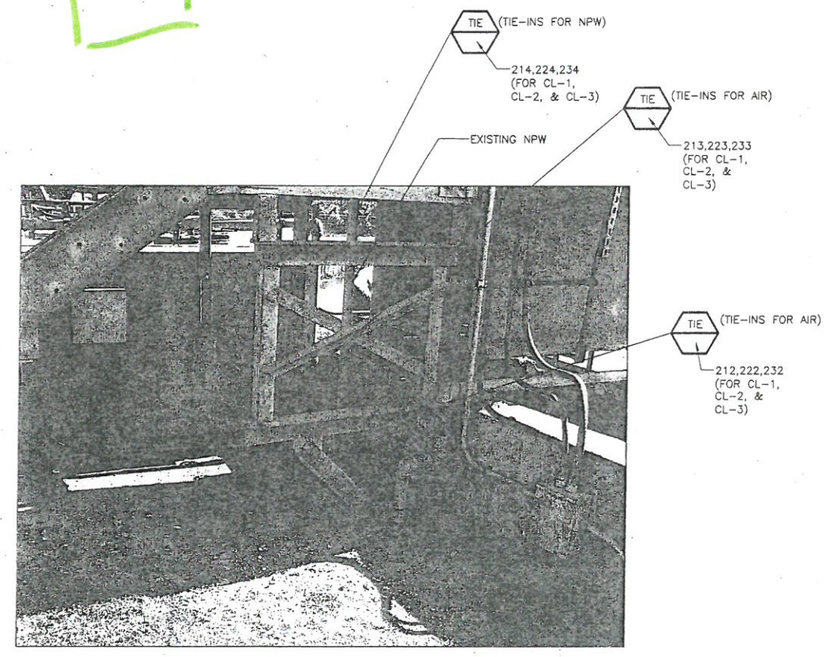

PHOTO 1- AIR/NPW PIPING TIE-IN LOCATION

SCALE: N.T.S.

WARNING

0 1

IF THIS BAR DOES NOT MEASURE 1" THEN DRAWING IS NOT TO SCALE

TO ARRANGE FOR LINES TO BE TURNED OFF OR MOVED, CALL CENTERPOINT AT 713-207-7777.

PRIVATE UTILITY LINES SHOWN

AT LEAST 48 HOURS BEFORE EXCAVATING IN STREET R.O.W. OR EASEMENTS CALL THE LONE STAR NOTIFICATION 713-223-4567.

Date:

CenterPoint Energy/Electric Facilities
(Approved only for crossing underground ductlines, unless otherwise noted.)
Valid at time of review only.

Date:

SBC Approved for underground conduit facilities only.
Signature valid for one year.

Date:

CenterPoint Energy/Gas Facilities
(Gas service lines are not shown)

No.	Date	Revisions	App.

STATE OF TEXAS
RAMESH KALLURI
68078
REGISTERED PROFESSIONAL ENGINEER
Ramesh Kalluri
9/19/2011

KGI Kalluri Group, Inc.
Consulting Engineers & Project Managers
TBPE Registration No. F-665
10497 Town & Country Way, Suite 220
Houston, Texas 77024
Phone: (713)-365-9288

Binkley & Barfield, Inc
consulting engineers
Texas Registration Number F-257
1710 Seamist Drive
Houston, Texas 77008-3189
(713) 869-3433

SURVEYED BY: AMANI ENG. | FIELD BOOK NO. : P-5486

CITY OF HOUSTON
DEPARTMENT OF PUBLIC WORKS AND ENGINEERING

ALMEDA SIMS WWTP & SPF IMPROVEMENTS PACKAGE II

CLARIFIERS PROPOSED IMPROVEMENTS (SHEET 2 OF 2)

FILE NO:	-
WBS:	R-000298-0005-4
DRAWING SCALE	N.T.S.
CITY OF HOUSTON PM	IRAJ RANJBAR, P.E.
DWG NO. :	M-205
SHEET NO.	69 OF 147

PUBLIC WORKS AND ENGINEERING
ACCEPTED & FILED
49061-
CITY DRAWING NUMBER
HOUSTON, TEXAS

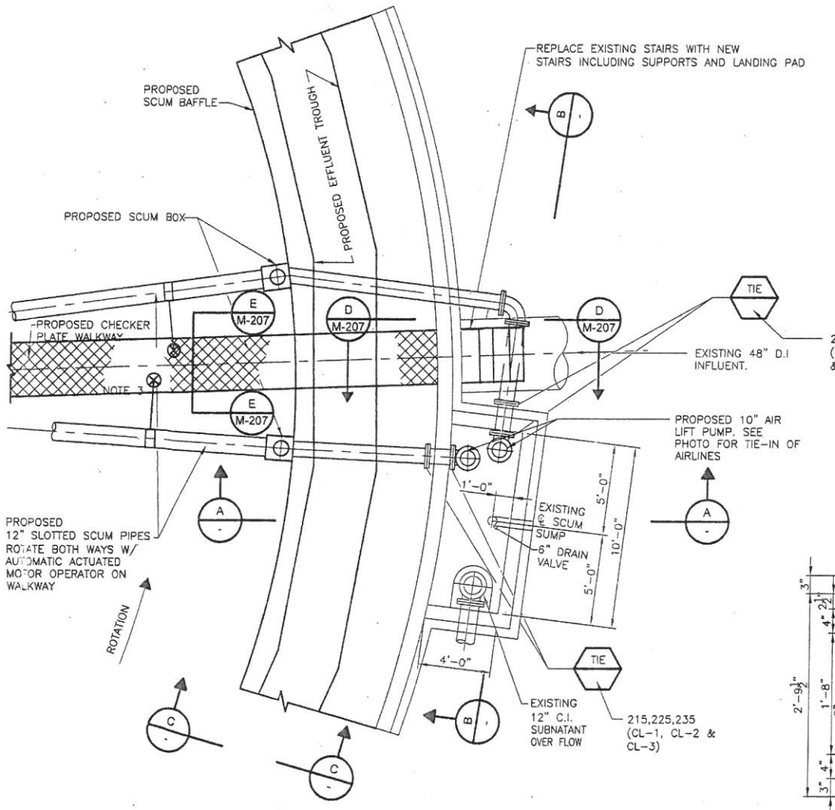

ENLARGED PLAN - SCUM BOX

SCALE: 1/4"=1'-0"

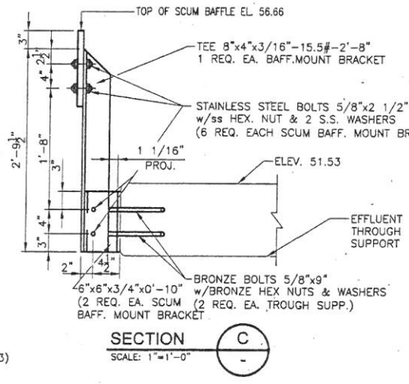

SECTION C

SCALE: 1"=1'-0"

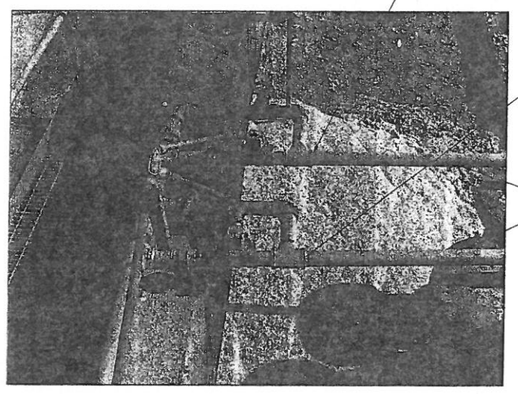

PHOTO 1 TIE-INS FOR AIRLINES TO SCUM PUMPS(TYP FOR 3-CLARIFIERS)

NTS

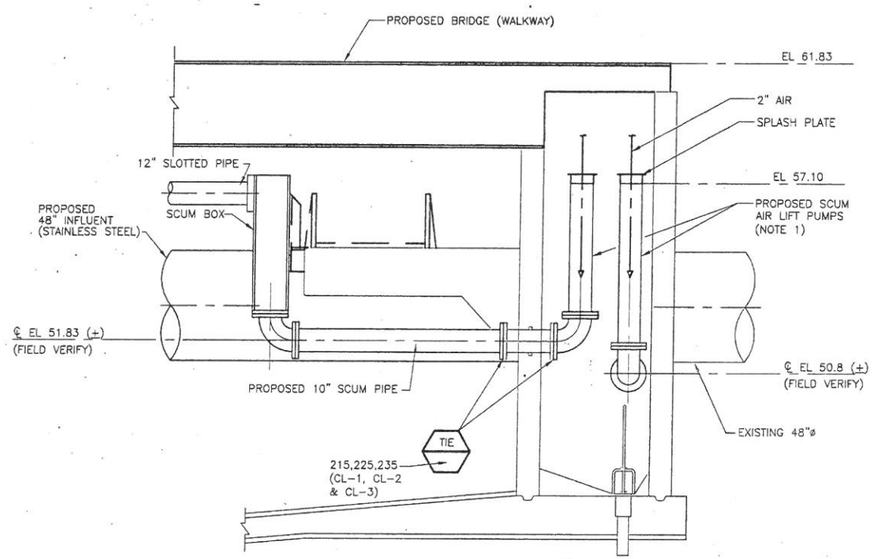

SECTION A

SCALE: 3/8"=1'-0"

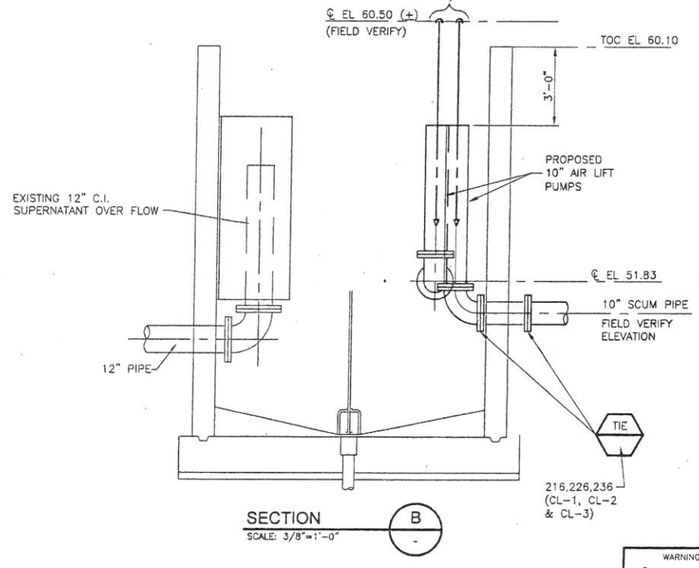

SECTION B

SCALE: 3/8"=1'-0"

WARNING

0 1

IF THIS BAR DOES NOT MEASURE 1" THEN DRAWING IS NOT TO SCALE

NOTES:

1. PROVIDE SPLASH PLATES FOR AIRLIFT PUMPS.
2. FIELD VERIFY ELEVATIONS OF EXISTING STRUCTURES AND PIPING.
3. PROVIDE A MINIMUM 30-INCH WALKING CLEARANCE BETWEEN ACTUATORS.

TO ARRANGE FOR LINES TO BE TURNED OFF OR MOVED, CALL CENTERPOINT AT 713-207-7777.

PRIVATE UTILITY LINES SHOWN

AT LEAST 48 HOURS BEFORE EXCAVATING IN STREET R.O.W. OR EASEMENTS CALL THE LONE STAR NOTIFICATION 713-223-4567.

Date:

CenterPoint Energy/Electric Facilities
(Approved only for crossing underground ductlines, unless otherwise noted.) Valid at time of review only.

Date:

SBC Approved for underground conduit facilities only. Signature valid for one year.

Date:

CenterPoint Energy/Gas Facilities
(Gas service lines are not shown)

No.	Date	Revisions	App.

STATE OF TEXAS
RAMESH KALLURI
68078
REGISTERED PROFESSIONAL ENGINEER
Ramesh Kalluri
9/19/2011

KGI Kalluri Group, Inc.
Consulting Engineers & Project Managers
TBPE Registration No. F-665
10497 Town & Country Way, Suite 220
Houston, Texas 77024
Phone: (713)-365-9288

Binkley & Barfield, Inc
consulting engineers
Texas Registration Number F-257
1710 Seamist Drive
Houston, Texas 77008-3189
(713) 869-3433

SURVEYED BY: AMANI ENG. FIELD BOOK NO. : P-5486

CITY OF HOUSTON
DEPARTMENT OF PUBLIC WORKS AND ENGINEERING

ALMEDA SIMS WWTP & SPF IMPROVEMENTS PACKAGE II

CLARIFIERS EFFLUENT THROUGH SCUM BOX DETAILS

FILE NO:	-
WBS:	R-000298-0005-4
DRAWING SCALE	N.T.S.
CITY OF HOUSTON PM	IRAJ RANJBAR, P.E.
DWG NO. :	M-206
SHEET NO.	70 OF 147

PUBLIC WORKS AND ENGINEERING ACCEPTED & FILED 49061 CITY DRAWING NUMBER HOUSTON, TEXAS

L:\Projects\Active projects\12-6-811 (Almeda Sims)\M-206.dwg, 9/19/2011 4:47:13 PM, HP Designjet 500

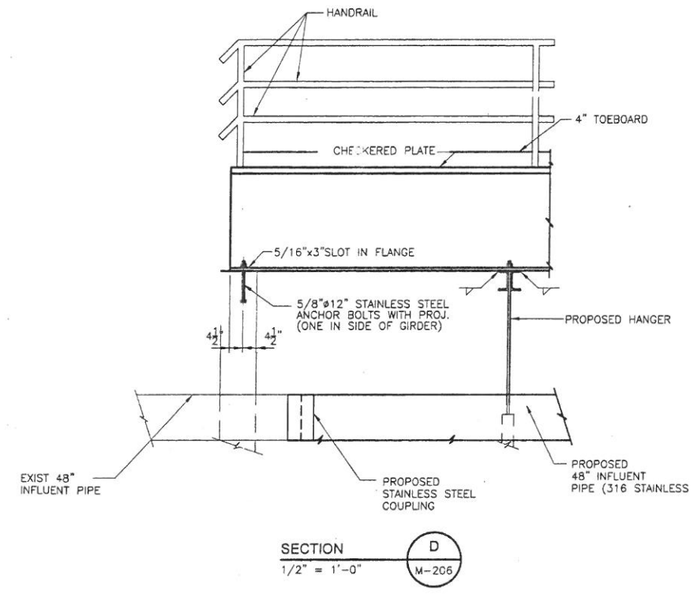

SECTION D
1/2" = 1'-0" M-206

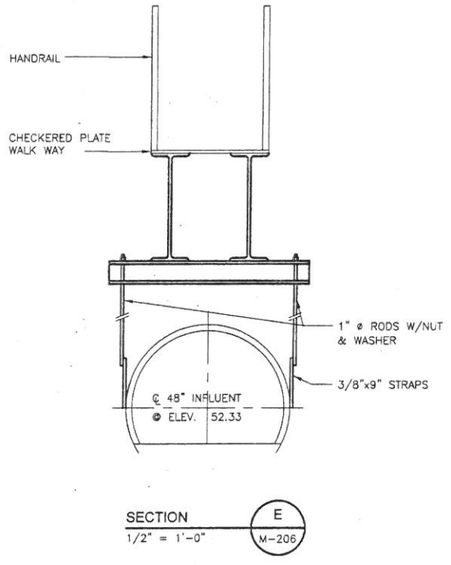

SECTION E
1/2" = 1'-0" M-206

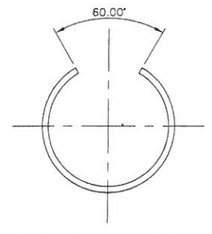

SECTION THRU ROTATING SCUM PIPE
N.T.S.

NOTES:

1. ALL DIMENSIONS AND ELEVATIONS SHOWN ARE BASED ON EXISTING RECORD DRAWINGS. CONTRACTOR SHALL FIELD VERIFY ALL DIMENSIONS INCLUDING ELEVATIONS PRIOR TO THE START OF ANY MATERIAL FABRICATION. INCLUDE THE COST OF SAME IN THE BID PRICE.

TO ARRANGE FOR LINES TO BE TURNED OFF OR MOVED, CALL CENTERPOINT AT 713-207-7777.

PRIVATE UTILITY LINES SHOWN
AT LEAST 48 HOURS BEFORE EXCAVATING IN STREET R.O.W. OR EASEMENTS CALL THE LONE STAR NOTIFICATION 713-223-4567.

Date:

CenterPoint Energy/Electric Facilities
(Approved only for crossing underground ductlines, unless otherwise noted.)
Valid at time of review only.

Date:

SBC Approved for underground conduit facilites only.
Signature valid for one year.

Date:

CenterPoint Energy/Gas Facilities
(Gas service lines are not shown)

No.	Date	Revisions	App.

STATE OF TEXAS
RAMESH KALLURI
68078
REGISTERED PROFESSIONAL ENGINEER
Ramesh Kalluri
9/19/2011

KGI Kalluri Group, Inc.
Consulting Engineers & Project Managers
TBPE Registration No. F-685
10497 Town & Country Way, Suite 220
Houston, Texas 77024
Phone: (713)-365-9288

Binkley & Barfield, Inc
consulting engineers
Texas Registration Number F-257
1710 Seamist Drive
Houston, Texas 77008-3189
(713) 869-3433

SURVEYED BY: AMANI ENG. | FIELD BOOK NO. : P-5486

CITY OF HOUSTON
DEPARTMENT OF PUBLIC WORKS AND ENGINEERING

ALMEDA SIMS WWTP & SPF IMPROVEMENTS PACKAGE II

CLARIFIERS- MISCELLANEOUS DETAILS

FILE NO:	-
WBS: R-000298-0005-4	
DRAWING SCALE	
N.T.S.	
CITY OF HOUSTON PM	
IRAJ RANJBAR, P.E.	
DWG NO. :	M-207
SHEET NO.	71 OF 147

PUBLIC WORKS AND ENGINEERING
ACCEPTED & FILED
49061
CITY DRAWING NUMBER
HOUSTON, TEXAS

WARNING
0 1
IF THIS BAR DOES NOT MEASURE 1" THEN DRAWING IS NOT TO SCALE

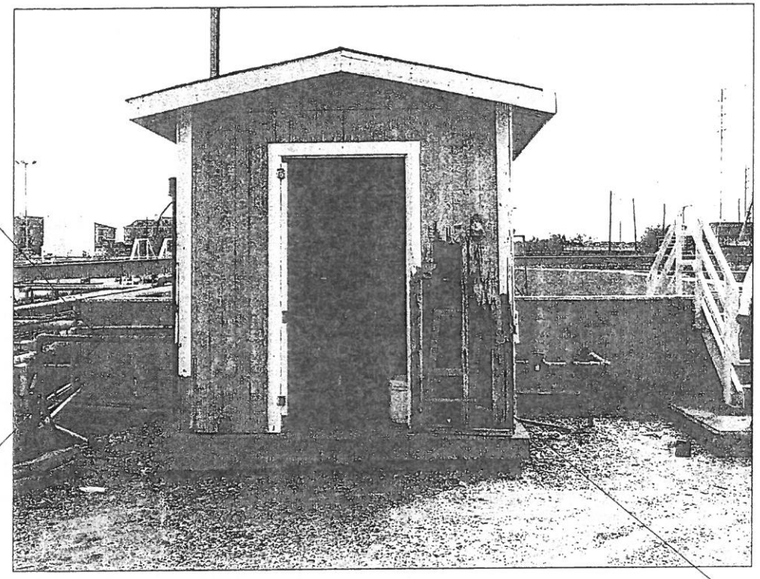

PHOTO 1-EXISTING NaOCl BUILDING FRONT VIEW

SCALE: N.T.S.

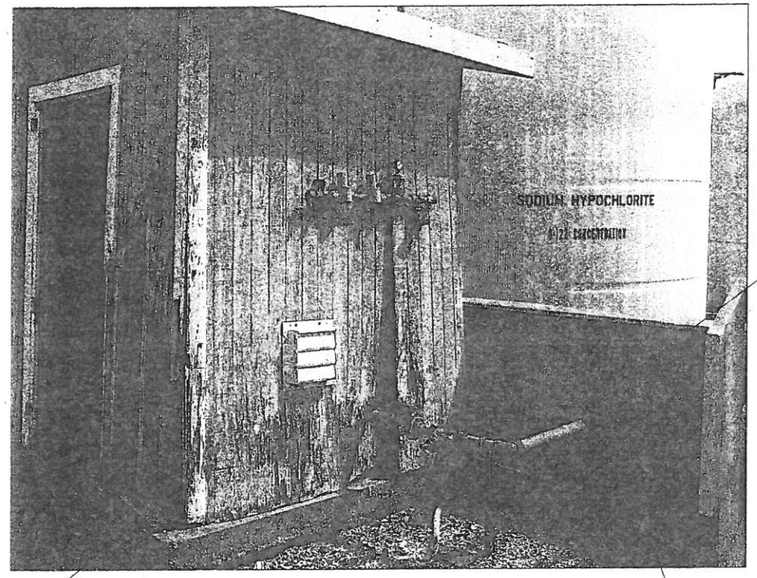

PHOTO 2-EXISTING NaOCl BUILDING SIDE VIEW

SCALE: N.T.S.

PHOTO 3-EXISTING CHLORINE ANALYZER

SCALE: N.T.S.

NOTES:

1. CONTRACTOR SHALL PROVIDE TEMPORARY CHEMICAL FEED SYSTEM DURING DEMOLITION AND INSTALLATION OF NEW SODIUM HYPO-CHLORITE SYSTEM. THE CHEMICAL FEED PUMPS SHALL BE OF THE SAME CAPACITY AS THE PROPOSED SYSTEM. INCLUDE THE COST OF SAME IN BID PRICE.

TO ARRANGE FOR LINES TO BE TURNED OFF OR MOVED, CALL CENTERPOINT AT 713-207-7777.

PRIVATE UTILITY LINES SHOWN

AT LEAST 48 HOURS BEFORE EXCAVATING IN STREET R.O.W. OR EASEMENTS CALL THE LONE STAR NOTIFICATION 713-223-4567.

Date:

CenterPoint Energy/Electric Facilities
(Approval only for crossing underground ductlines, unless otherwise noted.)
Valid at time of review only.

Date:

SBC Approved for underground conduit facilities only.
Signature valid for one year.

Date:

CenterPoint Energy/Gas Facilities
(Gas service lines are not shown)

No.	Date	Revisions	App.

STATE OF TEXAS
RAMESH KALLURI
68078
REGISTERED PROFESSIONAL ENGINEER

Ramesh Kalluri
9/19/2011

KGI Kalluri Group, Inc.
Consulting Engineers & Project Managers
TBPE Registration No. F-665
10497 Town & Country Way, Suite 220
Houston, Texas 77024
Phone: (713)-365-9288

Binkley & Barfield, Inc
consulting engineers
Texas Registration Number F-257
1710 Seamist Drive
Houston, Texas 77008-3189
(713) 869-3433

SURVEYED BY: AMANI ENG. FIELD BOOK NO. : P-5486

CITY OF HOUSTON
DEPARTMENT OF PUBLIC WORKS AND ENGINEERING

ALMEDA SIMS WWTP & SPF IMPROVEMENTS PACKAGE II

SODIUM HYPOCHLORITE BUILDING DEMOLITION

WARNING
0 1
IF THIS BAR DOES NOT MEASURE 1" THEN DRAWING IS NOT TO SCALE

FILE NO:	-
WBS: R-000288-0005-4	
DRAWING SCALE	
N.T.S.	
CITY OF HOUSTON PM	
IRAJ RANJBAR, P.E.	
DWG NO. :	M-208
SHEET NO.	72 OF 147

PUBLIC WORKS AND ENGINEERING
ACCEPTED & FILED
49061
CITY DRAWING NUMBER
HOUSTON, TEXAS

DEMO EXISTING PUMP SUCTION LINES

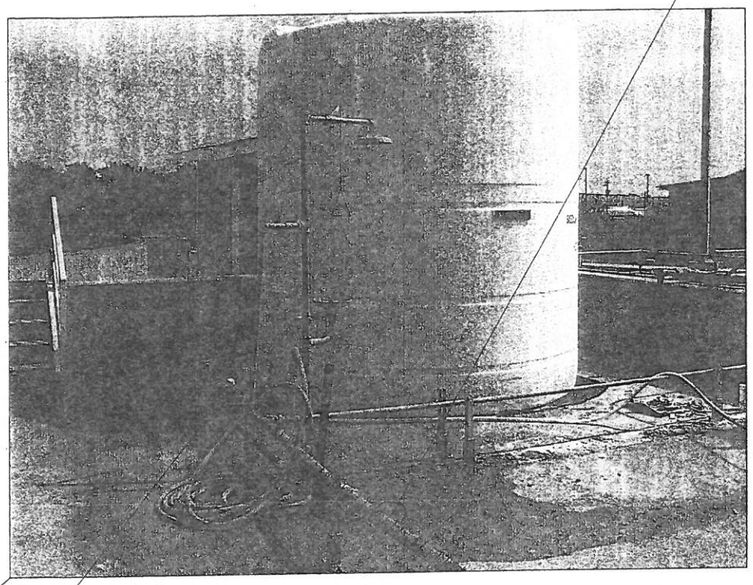

PHOTO 1- EXISTING NaOCl STORAGE TANK NO.1

SCALE: N.T.S.

TIE 251

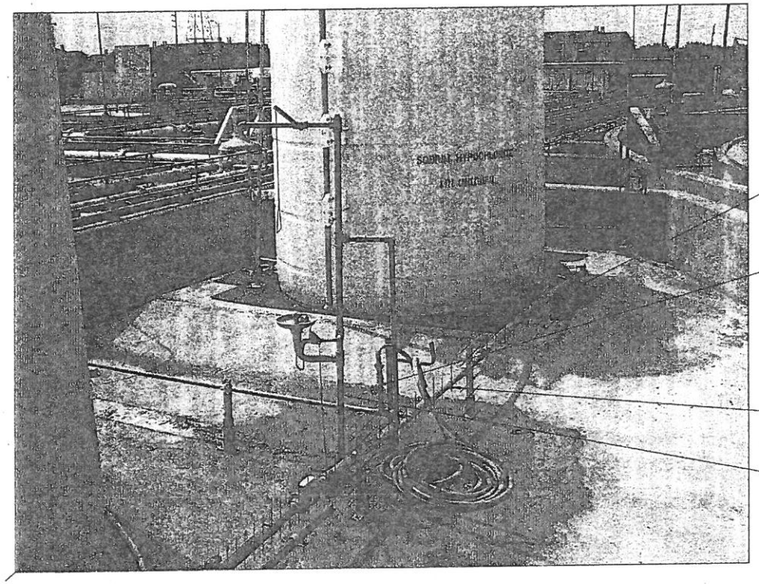

PHOTO 2-EXISTING NaOCl STORAGE TANK NO.2

SCALE: N.T.S.

TIE 252

DEMO EXISTING HOSE BIBB STATION AND INSTALL NEW HOSE BIBB PER DETAIL 91, DWG. NO. D-106

DEMO EXISTING PUMP SUCTION

DEMO EXISTING EYE WASH & SAFETY SHOWER AND REPLACE WITH NEW ONE

TO ARRANGE FOR LINES TO BE TURNED OFF OR MOVED, CALL CENTERPOINT AT 713-207-7777.

PRIVATE UTILITY LINES SHOWN

AT LEAST 48 HOURS BEFORE EXCAVATING IN STREET R.O.W. OR EASEMENTS CALL THE LONE STAR NOTIFICATION 713-223-4567.

Date:

CenterPoint Energy/Electric Facilities
(Approved only for crossing underground ductlines, unless otherwise noted.)
Valid at time of review only.

Date:

SBC Approved for underground conduit facilities only.
Signature valid for one year.

Date:

CenterPoint Energy/Gas Facilities
(Gas service lines are not shown)

No.	Date	Revisions	App.

STATE OF TEXAS
RAMESH KALLURI
68078
REGISTERED PROFESSIONAL ENGINEER

Ramesh Kalluri
9/19/2011

KGI Kalluri Group, Inc.
Consulting Engineers & Project Managers
TBPE Registration No. F-665
10497 Town & Country Way, Suite 220
Houston, Texas 77024
Phone: (713)-365-9288

Binkley & Barfield, Inc
consulting engineers
Texas Registration Number F-257
1710 Seamist Drive
Houston, Texas 77008-3189
(713) 869-3433

SURVEYED BY: AMANI ENG. | FIELD BOOK NO. : P-5486

CITY OF HOUSTON
DEPARTMENT OF PUBLIC WORKS AND ENGINEERING

ALMEDA SIMS WWTP & SPF IMPROVEMENTS PACKAGE II

SODIUM HYPOCHLORITE PIPING DEMOLITION

FILE NO:	–
WBS: R-000298-0005-4	
DRAWING SCALE	
N.T.S.	
CITY OF HOUSTON PM	
IRAJ RANJBAR, P.E.	
DWG NO. : M-209	
SHEET NO. 73 OF 147	

PUBLIC WORKS AND ENGINEERING
ACCEPTED & FILED
49061
CITY DRAWING NUMBER
HOUSTON, TEXAS

WARNING
0 1
IF THIS BAR DOES NOT MEASURE 1" THEN DRAWING IS NOT TO SCALE

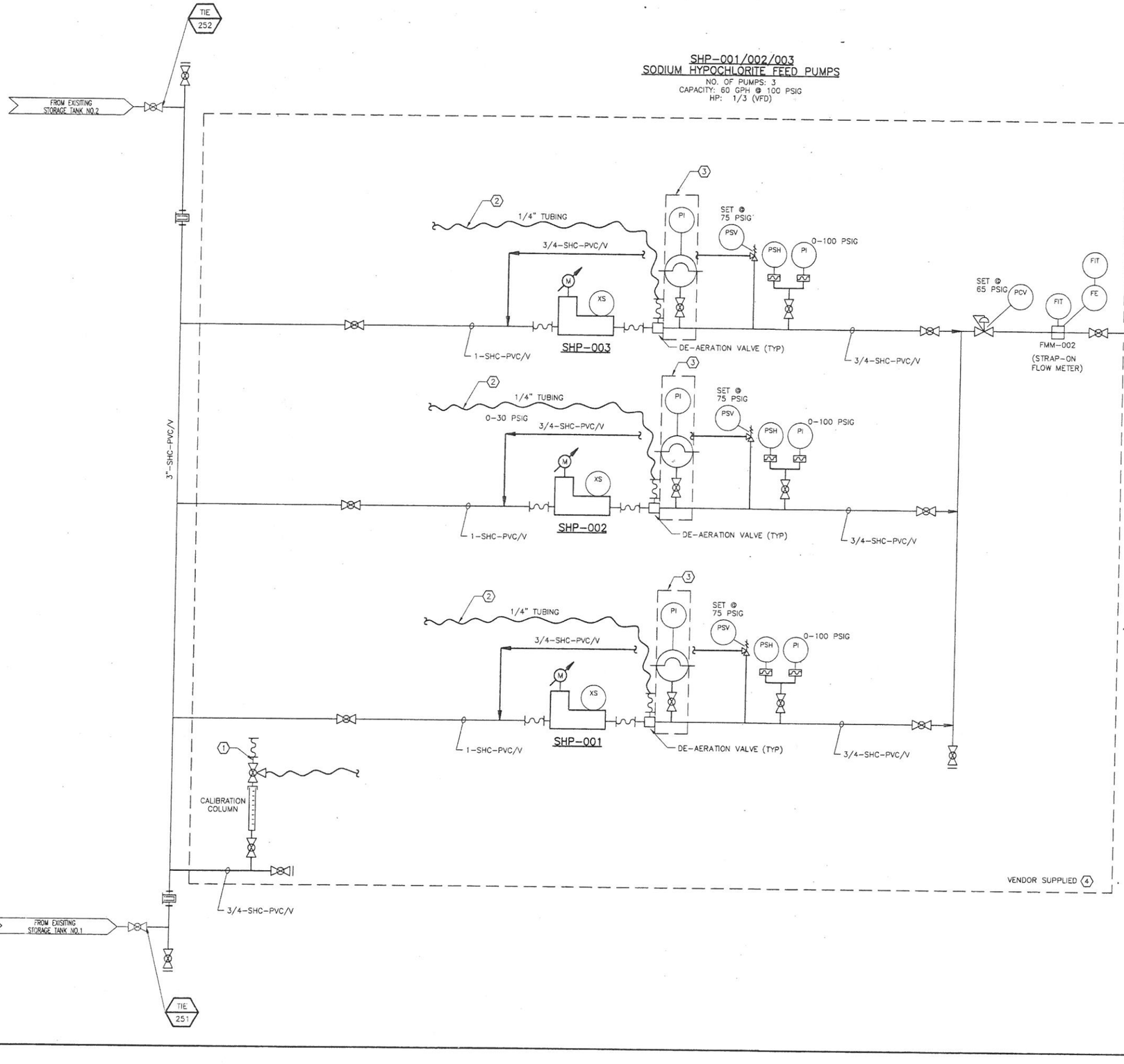

NOTES:

1. VENT TO ATMOSPHERE. TERMINATE VENT A MINIMUM 1'-0" ABOVE EXISTING BULK TANK OVERFLOW PIPE ELEVATION. PROVIDE DOUBLE GOUSE-NECK VENT.
2. ROUTE 1/4" TUBING TO CALIBRATION COLUMN VENT
3. FURNISH AND INSTALL PULSATION DAMPER, IF RECOMMENDED BY PUMP MANUFACTURER FOR WARRANTY PURPOSES.
4. ALL COMPONENTS SHOWN AS VENDOR SUPPLIED SHALL BE FURNISHED BY PUMP SUPPLIER.
5. PROVIDE CERTIFICATION THAT ALL MATERIAL INCLUDING PIPING IS COMPATIBLE AND SUITABLE FOR SODIUM HYPOCHLORITE APPLICATION

TO ARRANGE FOR LINES TO BE TURNED OFF OR MOVED, CALL CENTERPOINT AT 713-207-7777.

PRIVATE UTILITY LINES SHOWN

AT LEAST 48 HOURS BEFORE EXCAVATING IN STREET R.O.W. OR EASEMENTS CALL THE LONE STAR NOTIFICATION 713-223-4567.

Date:

CenterPoint Energy/Electric Facilities
(Approved only for crossing underground ductlines, unless otherwise noted.)
Valid at time of review only.

Date:

SBC Approved for underground conduit facilities only.
Signature valid for one year.

Date:

CenterPoint Energy/Gas Facilities
(Gas service lines are not shown)

No.	Date	Revisions	App.

STATE OF TEXAS
RAMESH KALLURI
68078
REGISTERED PROFESSIONAL ENGINEER
Ramesh Kalluri
9/19/2011

KGI Kalluri Group, Inc.
Consulting Engineers & Project Managers
TBPE Registration No. F-665
10497 Town & Country Way, Suite 220
Houston, Texas 77024
Phone: (713)-365-9288

Binkley & Barfield, Inc
consulting engineers
Texas Registration Number F-257
1710 Seamist Drive
Houston, Texas 77008-3189
(713) 869-3433

SURVEYED BY: AMANI ENG. | FIELD BOOK NO. : P-5486

CITY OF HOUSTON
DEPARTMENT OF PUBLIC WORKS AND ENGINEERING

ALMEDA SIMS WWTP & SPF IMPROVEMENTS PACKAGE II

SODIUM HYPOCHLORITE MECHANICAL FLOW DIAGRAM

FILE NO:	-
WBS: R-000298-0005-4	
DRAWING SCALE	
N.T.S.	
CITY OF HOUSTON PM	
IRAJ RANJBAR, P.E.	
DWG NO. :	M-210
SHEET NO.	74 OF 147

PUBLIC WORKS AND ENGINEERING
ACCEPTED & FILED
49061
CITY DRAWING NUMBER
HOUSTON, TEXAS

WARNING
0 1
IF THIS BAR DOES NOT MEASURE 1" THEN DRAWING IS NOT TO SCALE

20 of 151

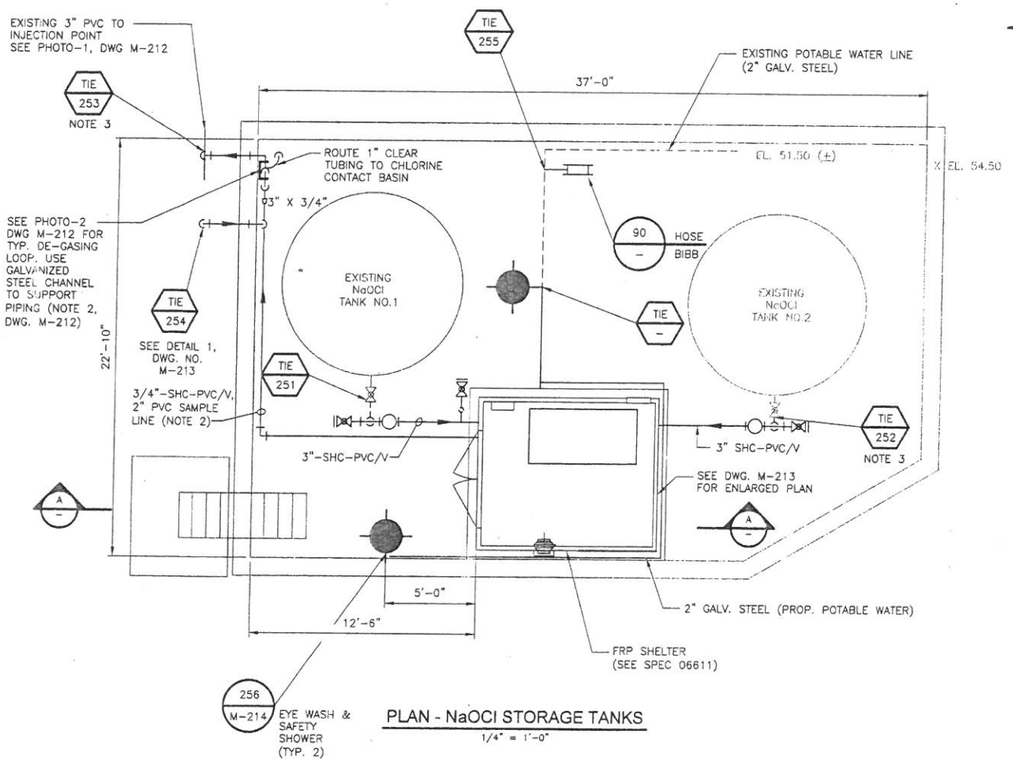

PLAN - NaOCl STORAGE TANKS

1/4" = 1'-0"

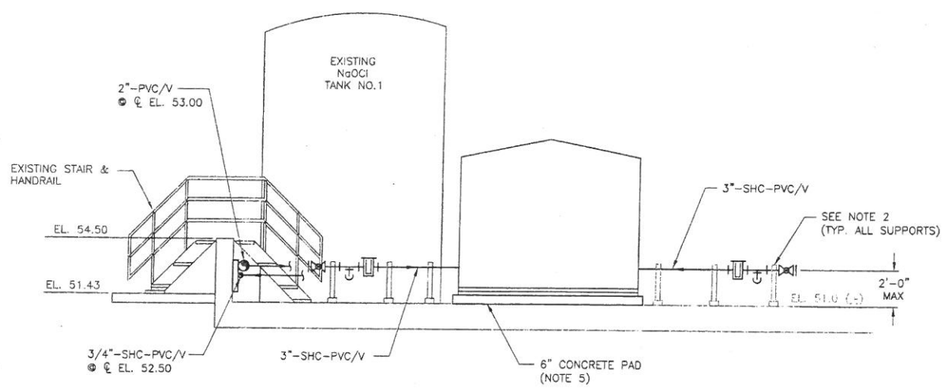

SECTION A

1/4" = 1'-0"

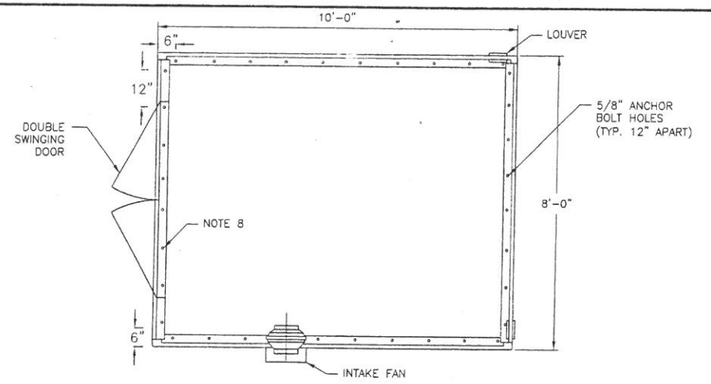

FRP SHELTER PLAN - BELOW ROOF

PLAN

1/2" = 1'-0"

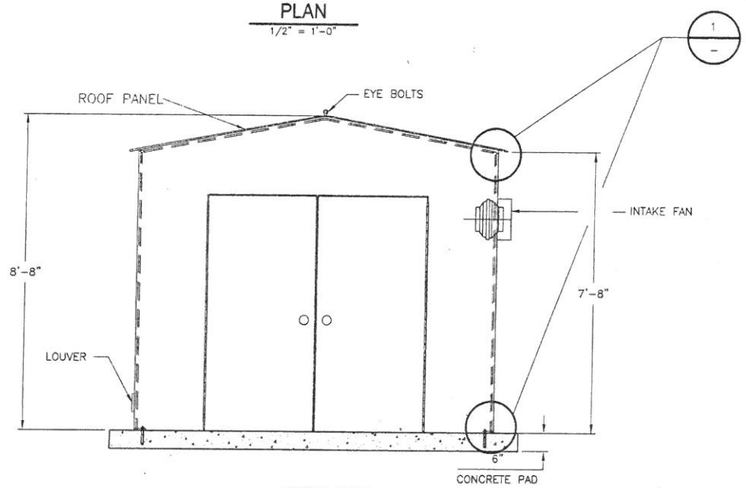

FRONT VIEW ELEVATION

1/2" = 1'-0"

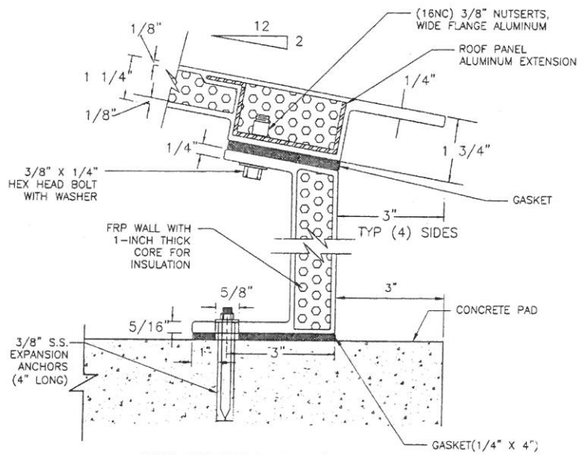

ROOF AND SIDE PANEL W/ FLANGE DETAIL 1

N.T.S.

NOTES:

1. ALL PIPING FOR SODIUM HYPOCHLORITE SHALL BE SCHEDULE 80 CPVC. PROVIDE CERTIFICATION STATING THE PIPE IS SUITABLE FOR HANDLING SODIUM HYPOCHLORITE. MSDS SHEETS ARE AVAILABLE UPON REQUEST FROM CITY OF HOUSTON.
2. PROVIDE PIPE SUPPORTS FOR ALL THE PIPING AS REQUIRED. USE 316 S.S. UNISTRUT PIPE SUPPOTS ANCHORED TO A MINIMUM 6-INCH HIGH CONCRETE BASE OR TO A WALL. SUPPORT SPACING SHALL NOT BE MORE THAN 4'-0".
3. FIELD VERIFY LOCATION AND ELEVATION OF ALL EXISTING PIPING PRIOR TO START OF CONSTRUCTION.
4. PRIOR TO START OF CONSTRUCTION, CONTRACTOR SHALL FIELD VERIFY LOCATION OF EXISTING PIPING, ETC. CONTRACTOR SHALL SUBMIT A SHOP DRAWING SHOWING ALL OF THE PROPOSED EQUIPMENT, PIPING, SUPPORTS AND TIE-INS IN RELATION TO THE EXISTING STRUCTURE FOR OWNER'S REVIEW AND APPROVAL. THE DRAWINGS SHALL BE PREPARED IN AUTOCAD R-2003 OR HIGHER. INCLUDE THE COST OF SAME IN THE BID PRICE.
5. USE DETAIL 248 "TYPICAL EQUIPMENT BASE DETAIL" WITH 6-INCH HEIGHT.
6. FRP SHELTER SHALL BE DESIGNED PER SPECIFICATION 06611.
7. SHELTER AND MOUNTING ANCHOR BOLTS SHALL BE DESIGNED TO WITHSTAND 125 MILES PER HOUR WIND LOAD.
8. ANCHORS SHALL BE 3/8-INCH DIAMETER STAINLESS STEEL EXPANSION TYPE SPACED 12-INCHES APART. USE FLAT HEAD ANCHORS IN FRONT OF DOORS.

TO ARRANGE FOR LINES TO BE TURNED OFF OR MOVED, CALL CENTERPOINT AT 713-207-7777.

PRIVATE UTILITY LINES SHOWN

AT LEAST 48 HOURS BEFORE EXCAVATING IN STREET R.O.W. OR EASEMENTS CALL THE LONE STAR NOTIFICATION 713-223-4567.

Date:

CenterPoint Energy/Electric Facilities (Approved only for crossing underground ductlines, unless otherwise noted.) Valid at time of review only.

Date:

SBC Approved for underground conduit facilities only. Signature valid for one year.

Date:

CenterPoint Energy/Gas Facilities (Gas service lines are not shown)

No.	Date	Revisions	App.

STATE OF TEXAS — RAMESH KALLURI — 88078 — REGISTERED PROFESSIONAL ENGINEER

Ramesh Kalluri 9/19/2011

KGI Kalluri Group, Inc.
Consulting Engineers & Project Managers
TBPE Registration No. F-565
10497 Town & Country Way, Suite 220
Houston, Texas 77024
Phone: (713)-365-9288

Binkley & Barfield, Inc
consulting engineers
Texas Registration Number F-257
1710 Seamist Drive
Houston, Texas 77008-3189
(713) 869-3433

SURVEYED BY: AMANI ENG. | FIELD BOOK NO. : P-5486

CITY OF HOUSTON
DEPARTMENT OF PUBLIC WORKS AND ENGINEERING

ALMEDA SIMS WWTP & SPF IMPROVEMENTS PACKAGE II

SODIUM HYPOCHLORITE PLAN, SECTION & DETAILS

FILE NO:	-
WBS:	R-000298-0005-4
DRAWING SCALE	N.T.S.
CITY OF HOUSTON PM	IRAJ RANJBAR, P.E.
DWG NO. :	M-211
SHEET NO.	75 OF 147

PUBLIC WORKS AND ENGINEERING — ACCEPTED & FILED — 49061 CITY DRAWING NUMBER — HOUSTON, TEXAS

WARNING
0 1
IF THIS BAR DOES NOT MEASURE 1" THEN DRAWING IS NOT TO SCALE

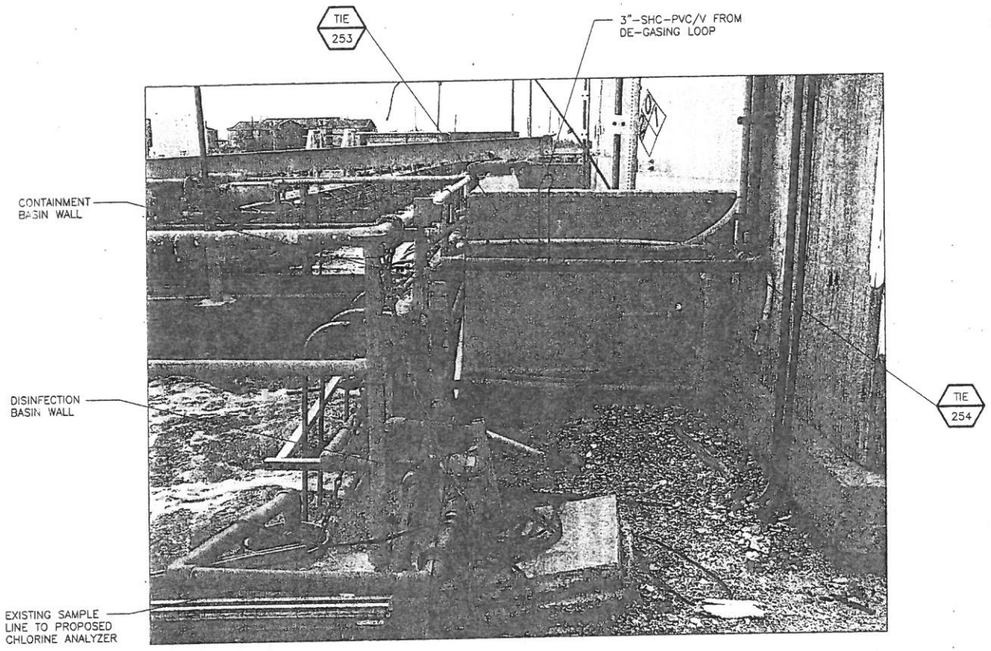

PHOTO 1-NaOCl PUMPS DISCHARGE PIPING AND CHLORINE SAMPLE PUMP PIPING TIE-INS

SCALE: N.T.S.

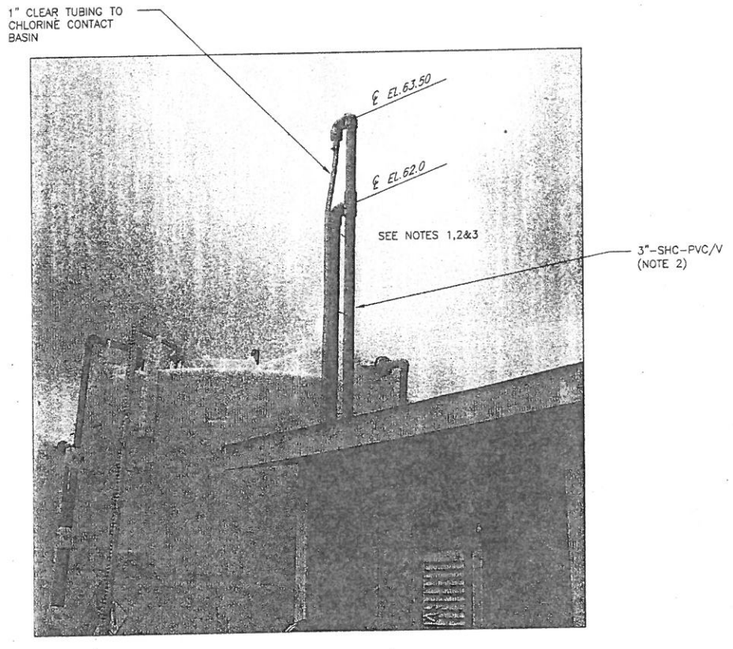

PHOTO 2-TYPICAL PUMP DISCHARGE DE-GASING LOOP

SCALE: N.T.S.

NOTES

1. USE THIS DETAIL AS AN EXAMPLE TO INSTALL DE-GASING LOOP.
2. USE GALV STEEL CHANNEL TO SUPPORT PIPE LOOP. CHANNEL SUPPORT SHALL BE DESIGNED FOR 120 MPH WIND SPEED. ANCHOR THE CHANNEL TO THE DIKE WALL AT THREE DIFFERENT LOCATIONS WITH TWO 1/2-INCH DIA ANCHOR BOLTS AT EACH LOCATION.

TO ARRANGE FOR LINES TO BE TURNED OFF OR MOVED, CALL CENTERPOINT AT 713-207-7777.

PRIVATE UTILITY LINES SHOWN

AT LEAST 48 HOURS BEFORE EXCAVATING IN STREET R.O.W. OR EASEMENTS CALL THE LONE STAR NOTIFICATION 713-223-4567.

Date:

CenterPoint Energy/Electric Facilities
(Approves only for crossing underground ductlines, unless otherwise noted.)
Valid at time of review only.

Date:

SBC Approved for underground conduit facilites only.
Signature valid for one year.

Date:

CenterPoint Energy/Gas Facilities
(Gas service lines are not shown)

No.	Date	Revisions	App.

STATE OF TEXAS
RAMESH KALLURI
68078
REGISTERED PROFESSIONAL ENGINEER
Ramesh Kalluri
9/19/2011

KGI Kalluri Group, Inc.
Consulting Engineers & Project Managers
TBPE Registration No. F-665
10497 Town & Country Way, Suite 220
Houston, Texas 77024
Phone: (713)-365-9288

Binkley & Barfield, Inc
consulting engineers
Texas Registration Number F-257
1710 Seamist Drive
Houston, Texas 77008-3189
(713) 869-3433

SURVEYED BY: AMANI ENG. | FIELD BOOK NO. : P-5486

CITY OF HOUSTON
DEPARTMENT OF PUBLIC WORKS AND ENGINEERING

ALMEDA SIMS WWTP & SPF IMPROVEMENTS PACKAGE II

SODIUM HYPOCHLORITE MISCELLANEOUS DETAILS

FILE NO:	-
WBS: R-000298-0005-4	
DRAWING SCALE	
N.T.S.	
CITY OF HOUSTON PM	
IRAJ RANJBAR, P.E.	
DWG NO. : M-212	
SHEET NO. 76 OF 147	

PUBLIC WORKS AND ENGINEERING
ACCEPTED & FILED
49061
CITY DRAWING NUMBER
HOUSTON, TEXAS

WARNING
0 1
IF THIS BAR DOES NOT MEASURE 1" THEN DRAWING IS NOT TO SCALE

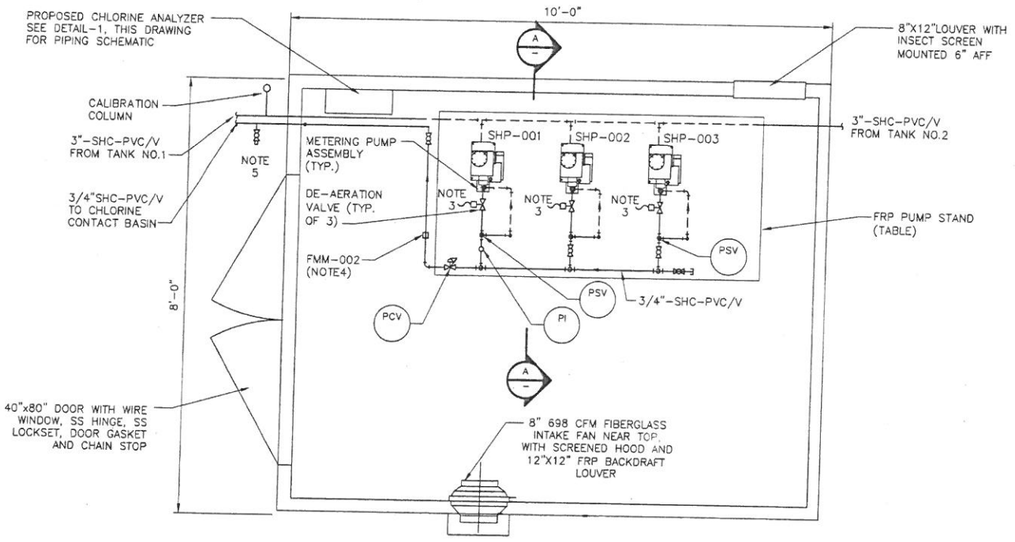

PLAN VIEW
SCALE: 3/4" = 1'-0"

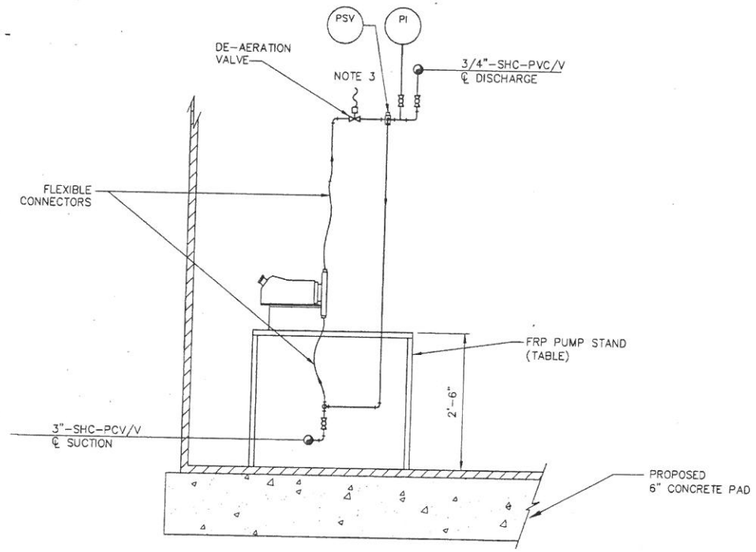

SECTION A
SCALE: NTS

PIPING NOTES:

1. ALL CHEMICAL SAMPLE PIPING FITTINGS AND VALVES SHALL BE SCH. 80 CPVC.
2. ALL PENETRATIONS THROUGH BUILDING WALL SHALL BE SEALED.
3. ALL ANALYZERS, VALVES AND PIPING SHOWN ARE TO BE MOUNTED AT AN ACCESSIBLE HEIGHT OFF THE SHELTER FLOOR.
7. PIPING INSIDE OF SHELTER SHALL BE SUPPORTED ADEQUATELY WITH FRP UNISTRUT SUPPORT ASSEMBLY.
8. PROVIDE ALL UNIONS NECESSARY TO FACILITATE CONVENIENT REMOVAL OF VALVES AND EQUIPMENT.
9. VALVES, GUAGES AND PIPING APPURTENANCES TO BE FIELD LOCATED.

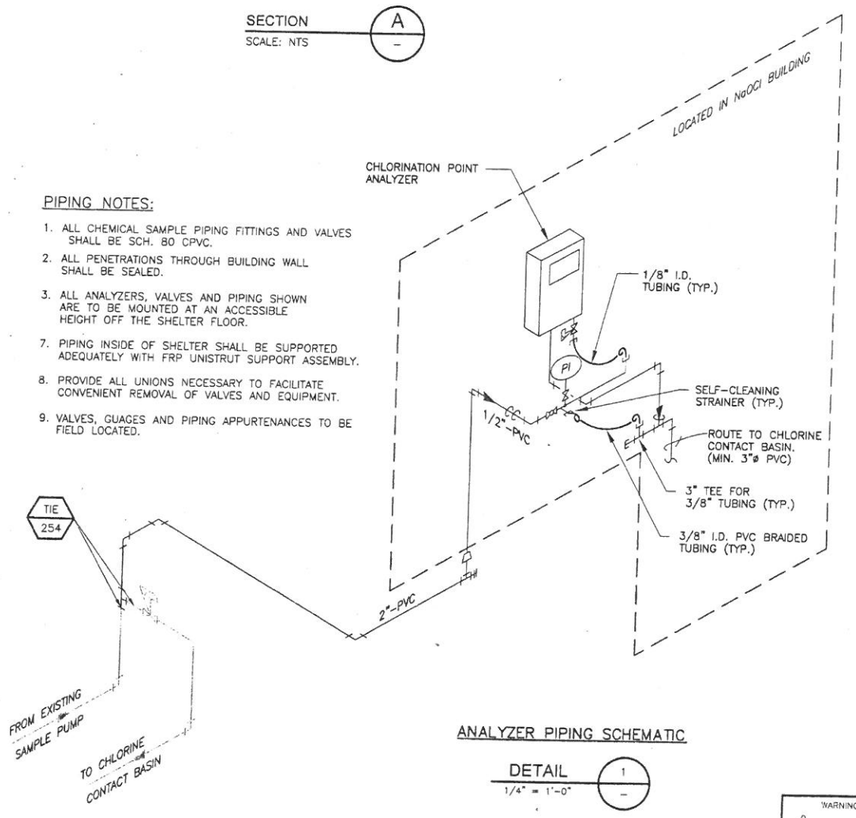

ANALYZER PIPING SCHEMATIC
DETAIL 1
1/4" = 1'-0"

NOTES

1. ALL PIPING AND FITTINGS SHALL BE 3/4" SCH. 80 PVC SOCKET WELD WITH VITON SEALS.
2. ALL BALL VALVES TO BE VENTED.
3. ROUTE TO CALIBRATION COLUMN VENT.
4. FMM-002 SHALL BE STRAP-ON FLOW METER SUITABLE FOR SMALL PIPE DIAMETERS.
5. PROVIDE 1/2" DRAIN AT ALL LOW POINTS.

TO ARRANGE FOR LINES TO BE TURNED OFF OR MOVED, CALL CENTERPOINT AT 713-207-7777.

PRIVATE UTILITY LINES SHOWN
AT LEAST 48 HOURS BEFORE EXCAVATING IN STREET R.O.W. OR EASEMENTS CALL THE LONE STAR NOTIFICATION 713-223-4567.

Date:
CenterPoint Energy/Electric Facilities
(Approval only for crossing underground ductlines, unless otherwise noted.)
Valid at time of review only.

Date:
SBC Approved for underground conduit facilities only.
Signature valid for one year.

Date:
CenterPoint Energy/Gas Facilities
(Gas service lines are not shown)

No.	Date	Revisions	App.

STATE OF TEXAS
RAMESH KALLURI
68074
REGISTERED PROFESSIONAL ENGINEER
Ramesh Kalluri 9/19/2013

KGI Kalluri Group, Inc.
Consulting Engineers & Project Managers
TBPE Registration No. F-665
10497 Town & Country Way, Suite 220
Houston, Texas 77024
Phone: (713)-365-9286

Binkley & Barfield, Inc
consulting engineers
Texas Registration Number F-257
1710 Seamist Drive
Houston, Texas 77008-3189
(713) 869-3433

SURVEYED BY: AMANI ENG. | FIELD BOOK NO. : P-5486

CITY OF HOUSTON
DEPARTMENT OF PUBLIC WORKS AND ENGINEERING

ALMEDA SIMS WWTP & SPF IMPROVEMENTS PACKAGE II

SODIUM HYPOCHLORITE SYSTEM
PLAN, SECTION & DETAILS

FILE NO:	-
WBS: R-000298-0005-4	
DRAWING SCALE	
N.T.S.	
CITY OF HOUSTON PM	
IRAJ RANJBAR, P.E.	
DWG NO. : M-213	
SHEET NO. 77 OF 147	

PUBLIC WORKS AND ENGINEERING
ACCEPTED & FILED
49061
CITY DRAWING NUMBER
HOUSTON, TEXAS

WARNING
0 1
IF THIS BAR DOES NOT MEASURE 1" THEN DRAWING IS NOT TO SCALE

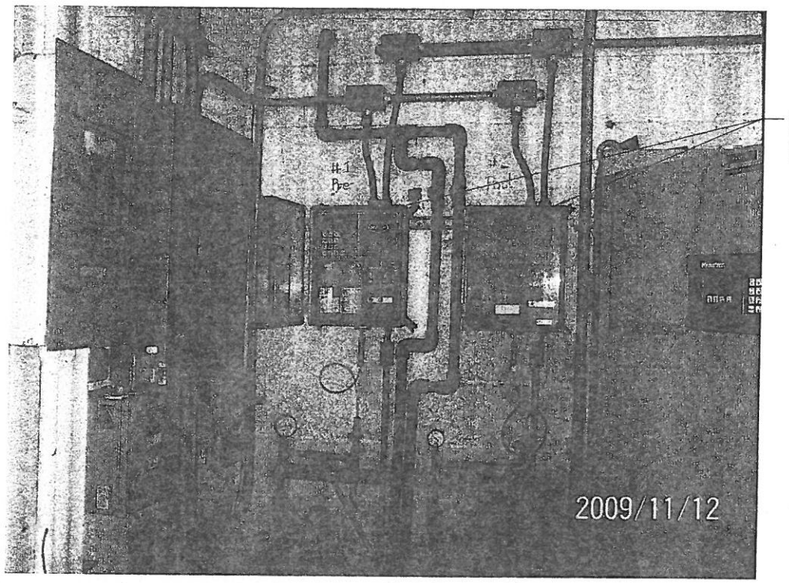

REPLACE EXISTING ANALYZERS WITH NEW ANALYZERS COMPLETE IN PLACE. (NOTE 1)

PHOTO - EXISTING PRE & POST CHLORINE ANALYZERS

SCALE: N.T.S.

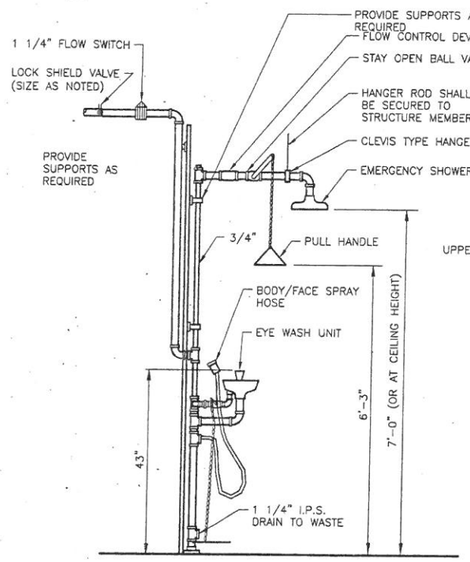

INTERIOR LOCATIONS

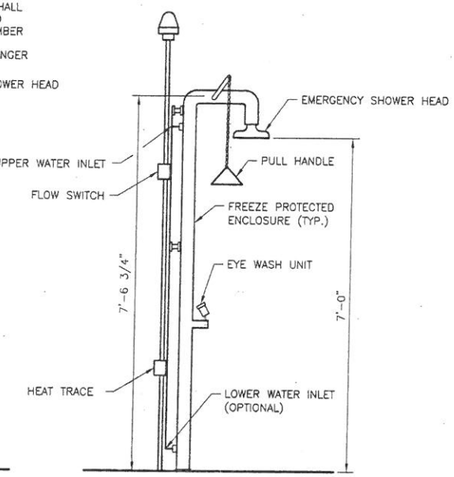

EXTERIOR LOCATIONS

NOTE:
SEE SPECIFICATION SECTION 11700 "EMERGENCY SHOWER AND EYEWASH" FOR FURTHER DETAIL FOR FLOW SWITCH ALARMING AND LIGHTING REQUIREMENTS.

EMERGENCY SHOWER/EYE WASH UNIT

DETAIL 256
N.T.S. –

NOTES

1. EXTRA UNIT PRICES WILL BE USED TO REPLACE THE EXISTING ANALYZERS. REPLACE THE ANALYZERS ONLY IF REQUESTED BY THE CITY IN WRITING.

TO ARRANGE FOR LINES TO BE TURNED OFF OR MOVED, CALL CENTERPOINT AT 713-207-7777.

PRIVATE UTILITY LINES SHOWN
AT LEAST 48 HOURS BEFORE EXCAVATING IN STREET R.O.W. OR EASEMENTS CALL THE LONE STAR NOTIFICATION 713-223-4567.

Date:

CenterPoint Energy/Electric Facilities
(Approved only for crossing underground ductlines, unless otherwise noted.)
Valid at time of review only.

Date:

SBC Approved for underground conduit facilites only.
Signature valid for one year.

Date:

CenterPoint Energy/Gas Facilities
(Gas service lines are not shown)

No.	Date	Revisions	App.

STATE OF TEXAS
RAMESH KALLURI
68078
REGISTERED PROFESSIONAL ENGINEER
Ramesh Kalluri
9/19/2011

KGI Kalluri Group, Inc.
Consulting Engineers & Project Managers
TBPE Registration No. F-665
10497 Town & Country Way, Suite 220
Houston, Texas 77024
Phone: (713)-365-9288

Binkley & Barfield, Inc
consulting engineers
Texas Registration Number F-257
1710 Seamist Drive
Houston, Texas 77008-3189
(713) 869-3433

SURVEYED BY: AMANI ENG. | FIELD BOOK NO. : P-5486

CITY OF HOUSTON
DEPARTMENT OF PUBLIC WORKS AND ENGINEERING

ALMEDA SIMS WWTP & SPF IMPROVEMENTS PACKAGE II

PRE & POST CHLORINE ANALYZER REPLACEMENT

FILE NO:	–
WBS: R-000298-0005-4	
DRAWING SCALE	
N.T.S.	
CITY OF HOUSTON PM	
IRAJ RANJBAR, P.E.	
DWG NO. : M-214	
SHEET NO. 78 OF 147	

ACCEPTED & FILED
49061
CITY DRAWING NUMBER
HOUSTON, TEXAS

WARNING
0 1
IF THIS BAR DOES NOT MEASURE 1" THEN DRAWING IS NOT TO SCALE

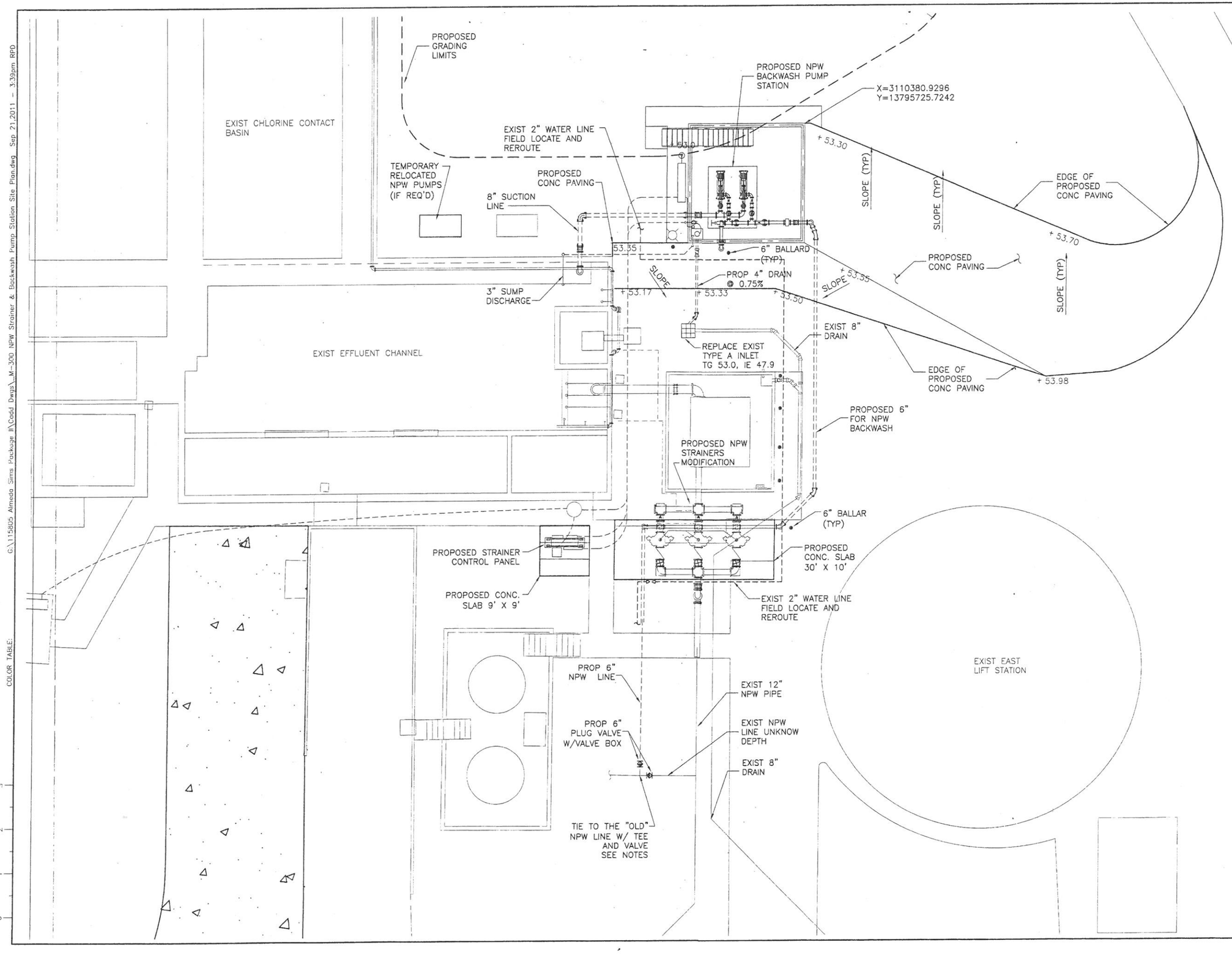

NOTES:

1. IF REQUIRED, TEMPORARILY RELOCATE THE EXISTING SUBMERSIBLE NPW PUMPS INCLUDING CONC PAD, PIPING AND ELECTRICAL, AND SHALL BE ADJUSTED FOR FIELD CONDITIONS.
2. CONTRACTOR SHALL PERFORM FIELD PROBING AND POTHOLE TEST TO LOCATE THE EXISTING UNDERGROUND PIPES & UTILITIES.
3. FIELD LOCATE EXIST NPW LINE. MODIFY EXIST NPW LINE TO MAKE CONNECTION WITH PROPOSED 6" NPW LINE W/ISOLATION VALVES.
4. FIELD LOCATE EXIST 2" WATER LINE. REROUTE EXIST 2" WATER LINE TO ALLOW NEW CONSTRUCTION WORK.
5. PROPOSED YARD PIPING IS SHOWN SCHEMATIC IN NATURE AND SHALL BE ADJUSTED FOR FIELD CONDITIONS. CONTRACTOR SHALL RELOCATE YARD PIPING OR ELEC. DUCTBANK IF IN CONFLICT WITH EXISTING.
6. CONTRACTOR NEEDS TO SAW CUT EXIST CONCRETE PAVEMENT TO INSTALL YARD PIPING AND ELEC. CONDUITS/DUCTBANK. RESTORE CONC. PAVEMENT UPON COMPLETION OF WORK.
7. INSTALL NEW TYPE A INLET TO REPLACE THE EXIST. RECONNECT EXIST 8" DRAIN.

No.	Date	Revisions	App.

STATE OF TEXAS
LI CHUNG CHEN
98576
REGISTERED PROFESSIONAL ENGINEER
9-21-2011

Binkley & Barfield, Inc
consulting engineers
Texas Registration Number F-257
1710 Seamist Drive
Houston, Texas 77008-3189
(713) 869-3433

SURVEYED BY: AMANI ENG. | FIELD BOOK NO. : P-5486

CITY OF HOUSTON
DEPARTMENT OF PUBLIC WORKS AND ENGINEERING

ALMEDA SIMS WWTP & SPF IMPROVEMENTS PACKAGE II

PROPOSED NPW STRAINER AND BACKWASH PUMP STATION SITE PLAN

FILE NO:	–
WBS: R-000298-0005-4	
DRAWING SCALE	1/8" = 1'
CITY OF HOUSTON PM	IRAJ RANJBAR, P.E.
DWG NO. :	M-300
SHEET NO. 79 OF 147	

PUBLIC WORKS AND ENGINEERING
ACCEPTED & FILED
49061-*
CITY DRAWING NUMBER
HOUSTON, TEXAS

ORIGINAL SCALE IN INCHES FOR REDUCED PLANS
0 1 2 3

COLOR TABLE:

G:\115805 Almeda Sims Package II\Cadd Dwgs_M-300 NPW Strainer & Backwash Pump Station Site Plan.dwg Sep 21,2011 - 3:39pm RPD

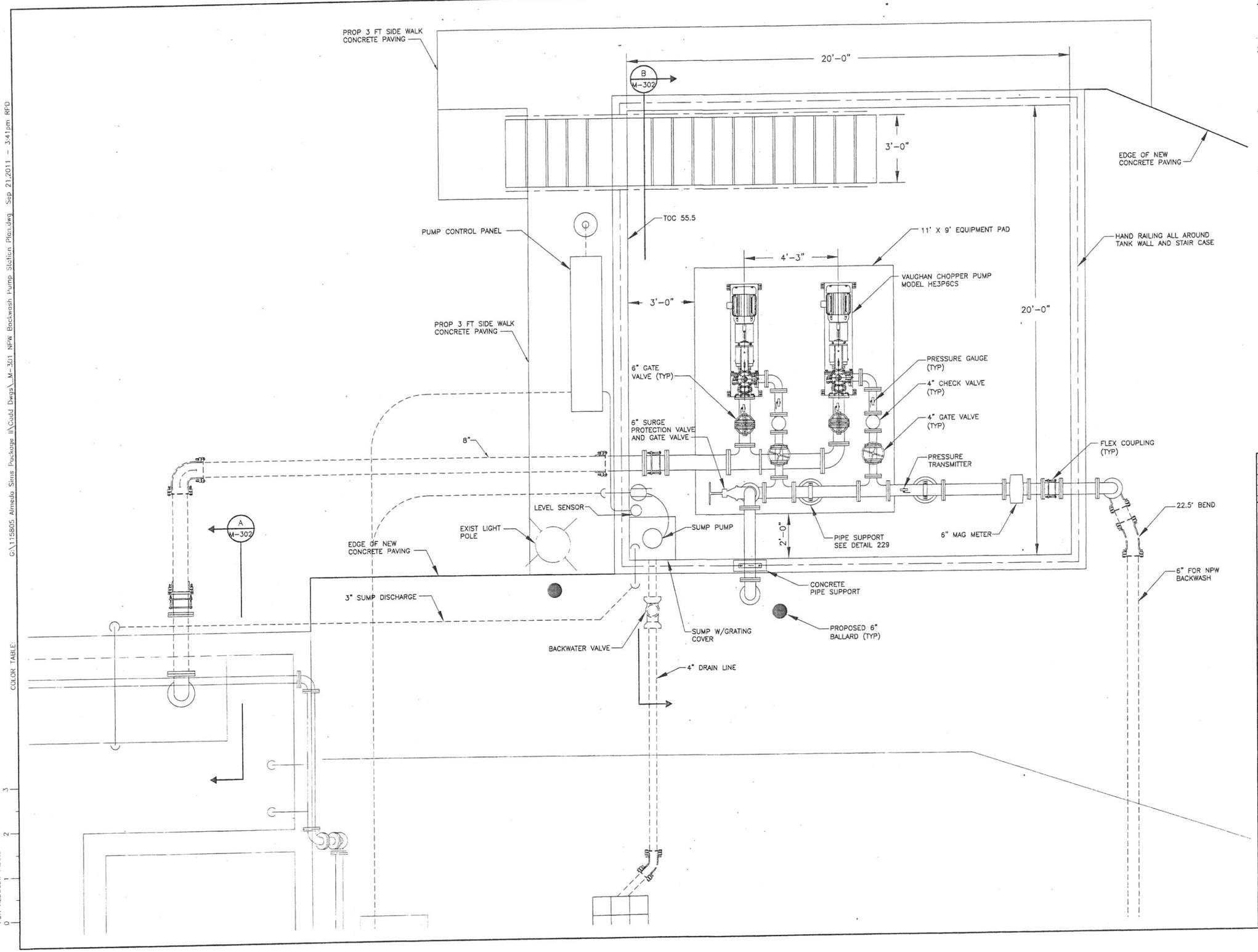

NOTES:

1. CONTRACTOR SHALL PERFORM FIELD PROBING AND POTHOLE TEST TO LOCATE THE EXISTING UNDERGROUND PIPES & UTILITIES.
2. PROPOSED YARD PIPING IS SHOWN SCHEMATIC IN NATURE AND SHALL BE ADJUSTED FOR FIELD CONDITIONS. CONTRACTOR SHALL RELOCATE YARD PIPING OR ELEC. DUCTBANK IF IN CONFLICT WITH EXISTING.
3. CONTRACTOR NEEDS TO SAW CUT EXIST CONCRETE PAVEMENT TO INSTALL YARD PIPING AND ELEC. CONDUITS/DUCTBANK. RESTORE CONC. PAVEMENT UPON COMPLETION OF WORK.
4. INSTALL NEW TYPE A INLET TO REPLACE THE EXIST. RECONNECT EXIST 8" DRAIN.

PIPING REQUIREMENTS:

1. ALL NPW PROCESS PIPING BELOW GRADE SHALL BE POLY OR EPOXY LINED DUCTILE IRON, MJ JOINTS.
2. ALL NPW PROCESS PIPING ABOVE GRADE SHALL BE POLY OR EPOXY LINED DUCTILE IRON, FLG JOINTS.
3. NPW BACKWASH DRAIN DISCHARGE PIPING SHALL BE POLY OR EPOXY LINED DUCTILE IRON, OR SCH 80 PVC.
4. POTABLE WATER LINE 3" AND SMALLER SHALL BE SCH 80 PVC

No.	Date	Revisions	App'd

STATE OF TEXAS
LI CHUNG CHEN
98576
REGISTERED PROFESSIONAL ENGINEER
LC Chen
9-21-2011

Binkley & Barfield, Inc
consulting engineers
Texas Registration Number F-257
1710 Seamist Drive
Houston, Texas 77008-3189
(713) 869-3433

SURVEYED BY: AMANI ENG. | FIELD BOOK NO. : P-5486

CITY OF HOUSTON
DEPARTMENT OF PUBLIC WORKS AND ENGINEERING

ALMEDA SIMS WWTP & SPF IMPROVEMENTS PACKAGE II

NPW BACKWASH PUMP STATION PLAN

FILE NO:	–
WBS: R-000298-0005-4	
DRAWING SCALE	1/2" = 1'
CITY OF HOUSTON PM	IRAJ RANJBAR, P.E.
DWG NO. :	M-301
SHEET NO.	80 OF 147

PUBLIC WORKS AND ENGINEERING
ACCEPTED & FILED
49061
CITY DRAWING NUMBER
HOUSTON, TEXAS

G:\115805 Almeda Sims Package II\Cadd Dwgs\M-301 NPW Backwash Pump Station Plan.dwg Sep 21,2011 - 3:41pm RFD
COLOR TABLE:
ORIGINAL SCALE IN INCHES FOR REDUCED PLANS
0 1 2 3

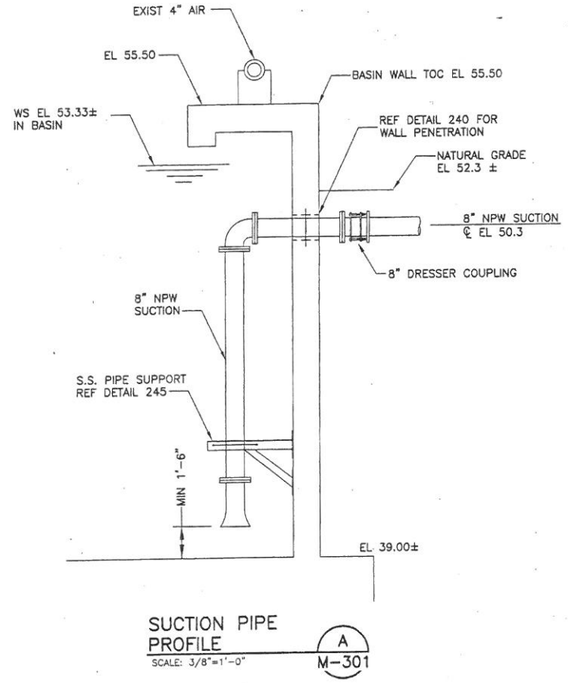

SUCTION PIPE PROFILE (A / M-301)
SCALE: 3/8"=1'-0"

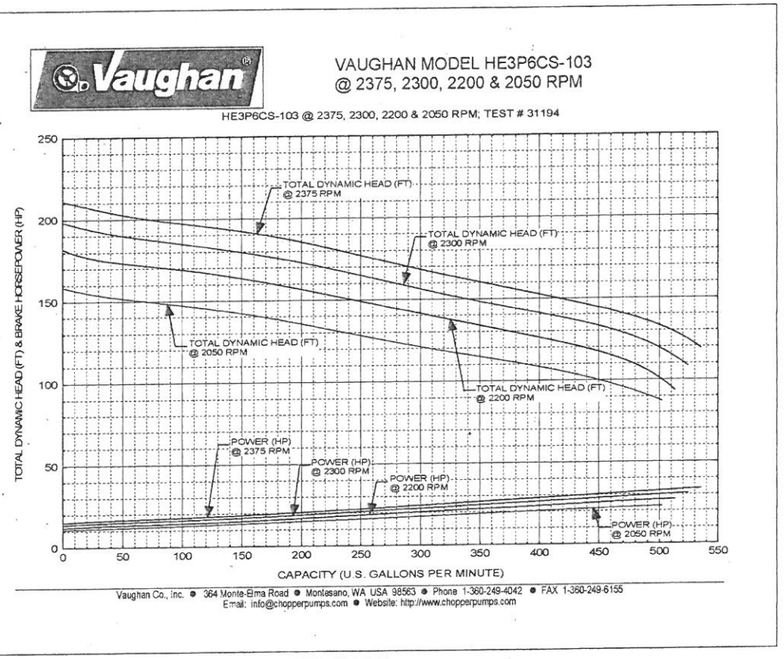

PUMP PERFORMANCE CURVE

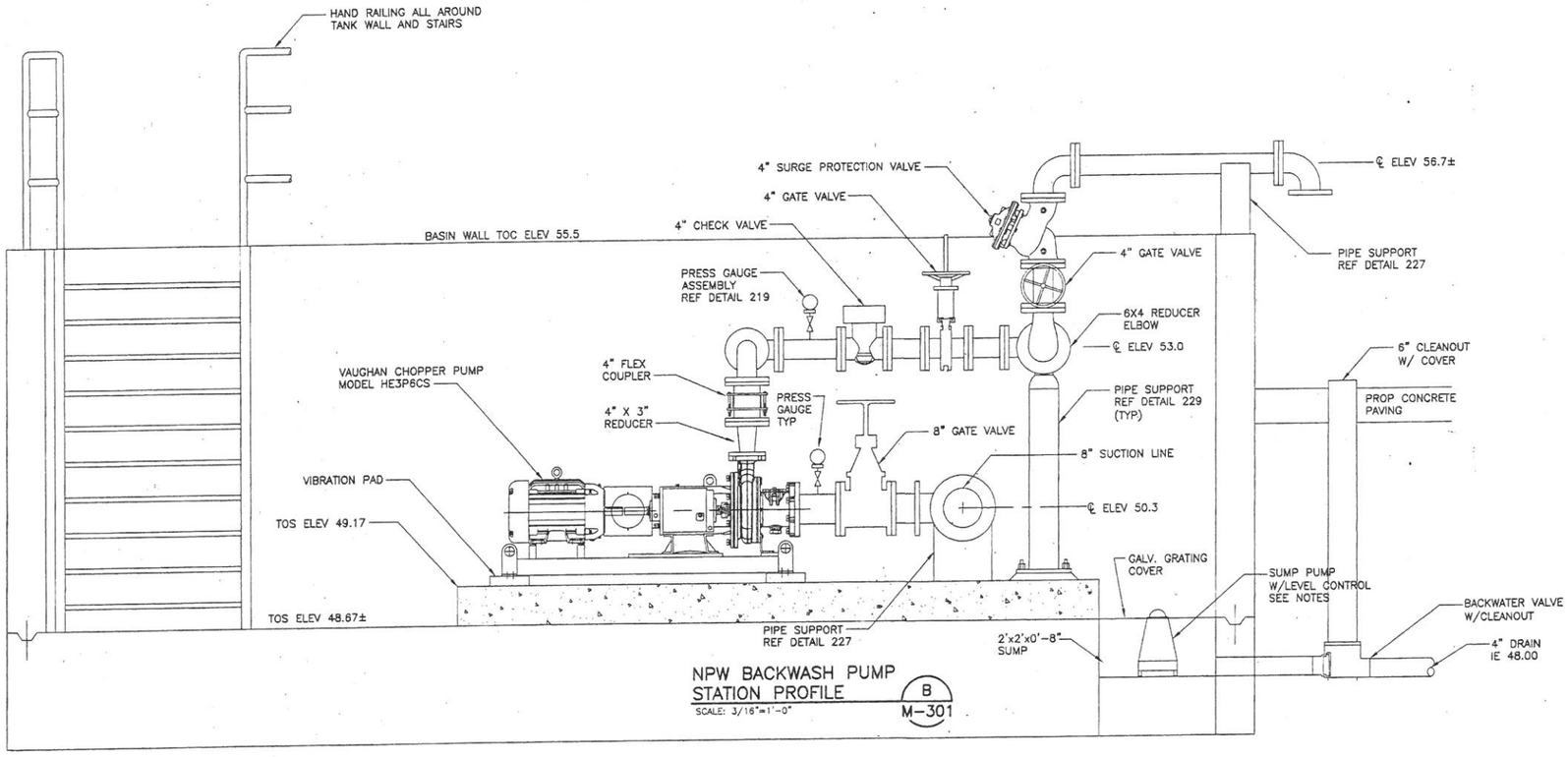

NPW BACKWASH PUMP STATION PROFILE (B / M-301)
SCALE: 3/16"=1'-0"

NOTES:

1. THE SUCTION OPENING SHALL BE PLACED IN SUCH POSITION THAT PROVIDES AT LEAST 1'-6" ABOVE THAN THE FLOOR IN THE CHLORINE CONTACT BASIN.
2. THE 4" DRAIN LINE SHALL HAVE CONSTANT SLOPE TOWARD THE STORM DRAIN SUMP, AND NOT INTERFERE WITH ANY EXISTING UNDERGROUND UTILITIES.
3. CONTRACTOR SHALL PERFORM FIELD PROBING AND POTHOLE TEST TO LOCATE THE EXISTING UNDERGROUND PIPES & UTILITIES.
4. INSTALL SUMP PUMP WITH LEVEL CONTROLS GRAINGER 4HEW5
5. INSTALL A BACKWATER WATER W/CLEANOUT AND COVER. ZURN MODEL Z-1095-15.

PIPING REQUIREMENTS:

1. ALL NPW PROCESS PIPING BELOW GRADE SHALL BE POLY OR EPOXY LINED DUCTILE IRON, MJ JOINTS.
2. ALL NPW PROCESS PIPING ABOVE GRADE SHALL BE POLY OR EPOXY LINED DUCTILE IRON, FLG JOINTS.
3. DRAIN DISCHARGE PIPING SHALL BE POLY OR EPOXY LINED DUCTILE IRON, OR SCH 40 PVC.

No.	Date	Revisions	App.

STATE OF TEXAS
LI CHUNG CHEN
98576
REGISTERED PROFESSIONAL ENGINEER
9-21-2011

Binkley & Barfield, Inc
consulting engineers
Texas Registration Number F-257
1710 Seamist Drive
Houston, Texas 77008-3189
(713) 869-3433

SURVEYED BY: AMANI ENG. | FIELD BOOK NO. : P-5486

CITY OF HOUSTON
DEPARTMENT OF PUBLIC WORKS AND ENGINEERING

ALMEDA SIMS WWTP & SPF IMPROVEMENTS PACKAGE II

NPW BACKWASH PUMP STATION SECTION & DETAILS

FILE NO:	–
WBS:	R-000298-0005-4
DRAWING SCALE	AS SHOWN
CITY OF HOUSTON PM	IRAJ RANJBAR, P.E.
DWG NO. :	M-302
SHEET NO.	81 OF 147

PUBLIC WORKS AND ENGINEERING
ACCEPTED & FILED
49061
CITY DRAWING NUMBER
HOUSTON, TEXAS

G:\115805 Almeda Sims Package II\Cadd Dwgs_M-302 NPW Backwash Pump Sta Section & Detail.dwg Sep 21,2011 - 3:44pm RPD

COLOR TABLE:

ORIGINAL SCALE IN INCHES FOR REDUCED PLANS
0 1 2 3

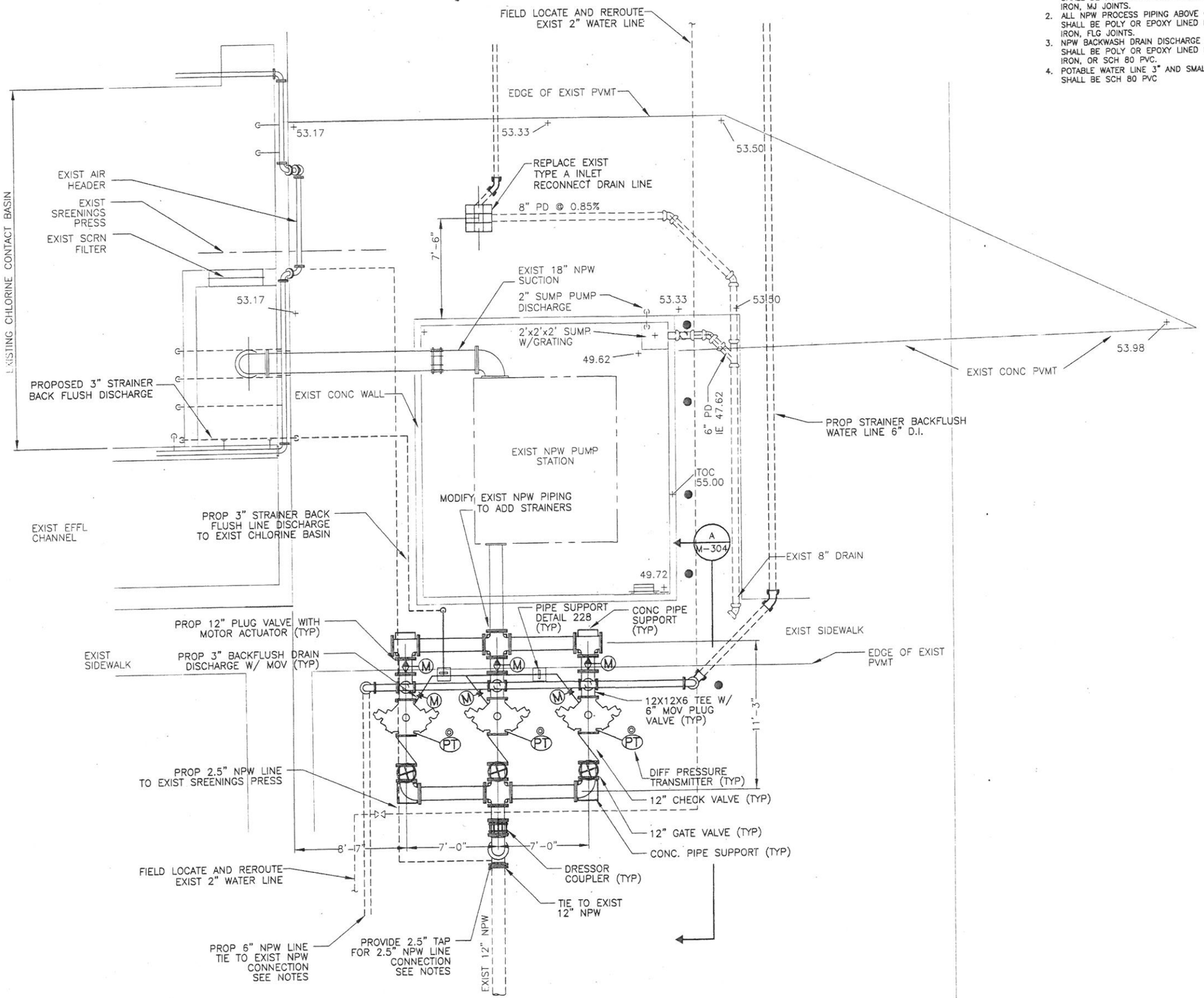

ENLARGED STRAINER MODIFICATION SITE PLAN

PIPING REQUIREMENTS:

1. ALL NPW PROCESS PIPING BELOW GRADE SHALL BE POLY OR EPOXY LINED DUCTILE IRON, MJ JOINTS.
2. ALL NPW PROCESS PIPING ABOVE GRADE SHALL BE POLY OR EPOXY LINED DUCTILE IRON, FLG JOINTS.
3. NPW BACKWASH DRAIN DISCHARGE PIPING SHALL BE POLY OR EPOXY LINED DUCTILE IRON, OR SCH 80 PVC.
4. POTABLE WATER LINE 3" AND SMALLER SHALL BE SCH 80 PVC

NOTES:

1. REFURBISH THE EXISTING NPW STRAINER WITH NEW FILTER ELEMENTS, SCRAPPER, BEARING, O-RING & GASKETS. INSTALL NEW DP TRANSMITTER, WIRING AND CONDUITS, AND NEW STRAINER CONTROLS.
2. MODIFY EXISTING NPW PIPING TO INSTALL NEW PIPING & PIPE SUPPORTS.
3. MODIFY EXISTING 3" STRAINER BACKFLUSH LINE TO CONNECT WITH NEW STRAINER BACKFLUSH LINES. PROVIDE PIPE SUPPORT (DETAIL 228).
4. PROVIDE NEW 2.5" NPW LINE FOR THE EXIST SCREEN.
5. CONTRACTOR SHALL COORDINATE NPW SYSTEM SHUT DOWN WITH PLANT MANAGER. EACH DOWN TIME SHOULD BE LIMITED TO 8 HRS.
6. CONTRACTOR SHALL SAW CUT AND REMOVE CONCRETE TO TIE IN WITH EXIST NPW PIPE BELOW GRADE
7. CONTRACTOR SHALL PERFORM FIELD PROBING AND POTHOLE TESTING TO LOCATE EXISTING UNDERGROUND PIPES
8. FIELD LOCATE EXIST NPW LINE. MODIFY EXIST NPW LINE TO MAKE CONNECTION WITH PROPOSED 6" NPW LINE.
9. CONTRACTOR SHALL RESTORE THE CONCRETE UPON COMPLETION OF THE UNDERGROUND WORK.
10. PROVIDE FREEZE PROTECTION INSULATION FOR DIFF PRESSURE LINES AT DP TRANSMITTERS.

No.	Date	Revisions	App.

STATE OF TEXAS — LI CHUNG CHEN — 98576 — REGISTERED PROFESSIONAL ENGINEER
9-21-2011

Binkley & Barfield, Inc
consulting engineers
Texas Registration Number F-257
1710 Seamist Drive
Houston, Texas 77008-3189
(713) 869-3433

SURVEYED BY: AMANI ENG. | FIELD BOOK NO. : P-5486

CITY OF HOUSTON
DEPARTMENT OF PUBLIC WORKS AND ENGINEERING

ALMEDA SIMS WWTP & SPF IMPROVEMENTS PACKAGE II

PROPOSED NPW STRAINER MODIFICATION DETAILS

FILE NO:	–
WBS: R-000298-0005-4	
DRAWING SCALE	1/4" = 1'
CITY OF HOUSTON PM	IRAJ RANJBAR, P.E.
DWG NO. :	M-303
SHEET NO.	82 OF 147

PUBLIC WORKS AND ENGINEERING — ACCEPTED & FILED — 49061 — CITY DRAWING NUMBER — HOUSTON, TEXAS

ORIGINAL SCALE IN INCHES FOR REDUCED PLANS 0 1 2 3

COLOR TABLE:

G:\115805 Almeda Sims Package II\Cadd Dwgs_M-303 NPW Strainer Modification Plan.dwg Sep 21,2011 - 3:51pm RPD

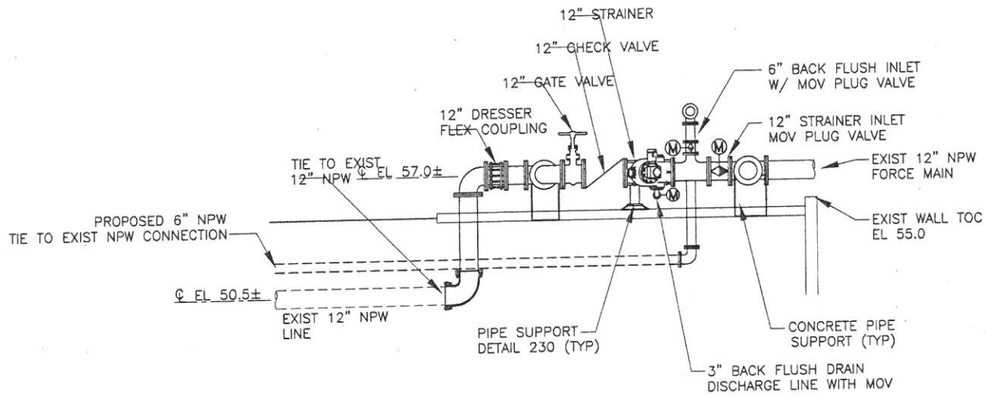

NPW STRAINER MODIFICATION PROFILE (A) M-303
SCALE: 1/4"=1'-0"

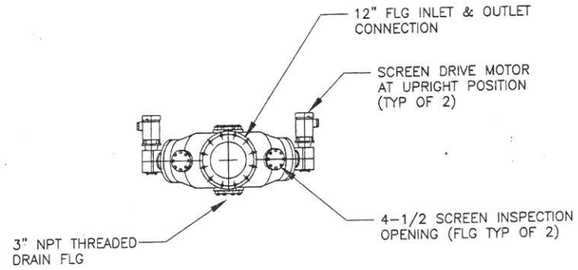

STRAINER INSTALLATION PROFILE (B) –
SCALE: NTS

NOTES:

1. CONTRACTOR SHALL SAW CUT AND REMOVE CONCRETE TO TIE IN WITH EXIST NPW PIPE BELOW GRADE
2. CONTRACTOR SHALL PERFORM FIELD PROBING AND POTHOLE TESTING TO LOCATE EXISTING UNDERGROUND PIPES
3. CONTRACTOR SHALL RESTORE THE CONCRETE UPON COMPLETION OF THE UNDERGROUND WORK.
4. FIELD LOCATE EXIST NPW LINE. MODIFY EXIST NPW LINE TO MAKE CONNECTION WITH PROPOSED 6" NPW LINE.

PIPING REQUIREMENTS:

1. ALL NPW PROCESS PIPING BELOW GRADE SHALL BE POLY OR EPOXY LINED DUCTILE IRON, MJ JOINTS.
2. ALL NPW PROCESS PIPING ABOVE GRADE SHALL BE POLY OR EPOXY LINED DUCTILE IRON, FLG JOINTS.
3. NPW BACKWASH DRAIN DISCHARGE PIPING SHALL BE POLY OR EPOXY LINED DUCTILE IRON, OR SCH 80 PVC.

No.	Date	Revisions	App

STATE OF TEXAS
LI CHUNG CHEN
98576
REGISTERED PROFESSIONAL ENGINEER
9-21-2011

Binkley & Barfield, Inc
consulting engineers
Texas Registration Number F-257
1710 Seamist Drive
Houston, Texas 77008-3189
(713) 869-3433

SURVEYED BY: AMANI ENG. | FIELD BOOK NO. : P-5486

CITY OF HOUSTON
DEPARTMENT OF PUBLIC WORKS AND ENGINEERING

ALMEDA SIMS WWTP & SPF IMPROVEMENTS PACKAGE II

PROPOSED NPW STRAINER MODIFICATION PROFILE

FILE NO:	–
WBS: R-000298-0005-4	
DRAWING SCALE	AS NOTED
CITY OF HOUSTON PM	IRAJ RANJBAR, P.E.
DWG NO. :	M-304
SHEET NO.	83 OF 147

PUBLIC WORKS AND ENGINEERING ACCEPTED & FILED CITY DRAWING NUMBER HOUSTON, TEXAS

G:\115805 Almeda Sims Package II\Cadd Dwgs_M-304 NPW Strainer Modification Profile.dwg Sep 21,2011 - 3:52pm RPD

COLOR TABLE:

ORIGINAL SCALE IN INCHES FOR REDUCED PLANS
0 1 2 3

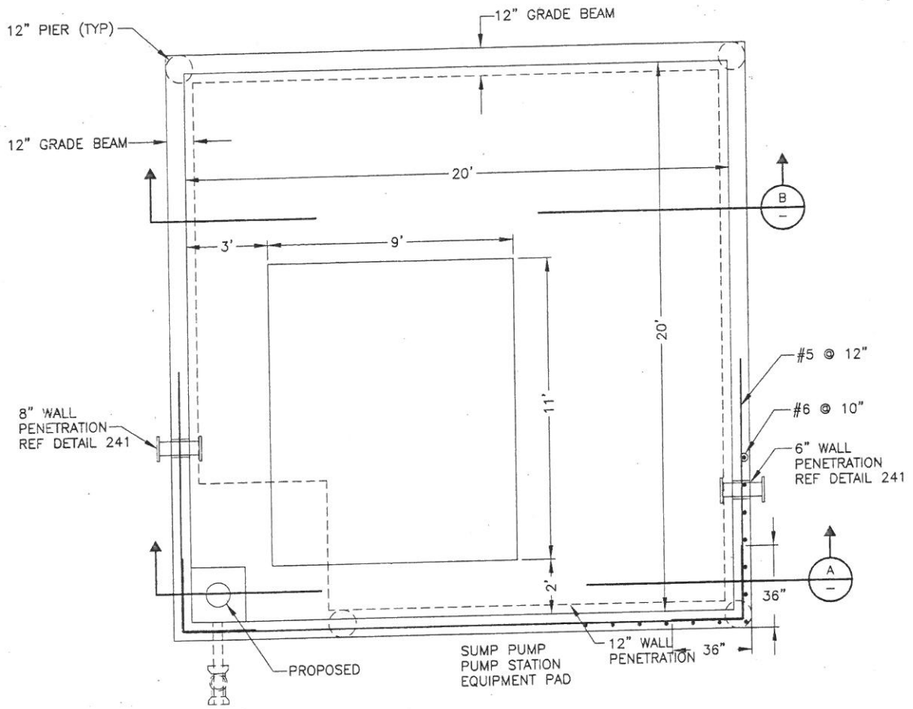

PLAN
SCALE: 3/8"=1'-0"

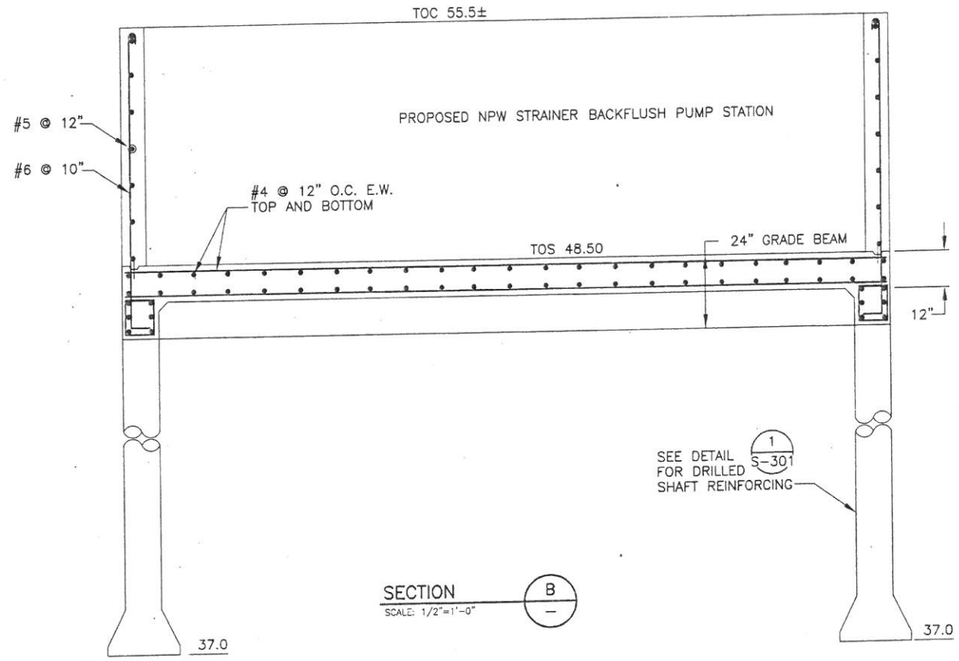

SECTION B
SCALE: 1/2"=1'-0"

NOTES:

1. CONTRACTOR SHALL DOWEL IN EXIST CONCRETE TO TIE WITH THE NEW CONCRETE WALLS.
2. CONTRACTOR SHALL PERFORM FIELD PROBING AND POTHOLE TESTING TO LOCATE EXISTING UNDERGROUND PIPES
3. CONTRACTOR SHALL RESTORE THE CONCRETE UPON COMPLETION OF THE UNDERGROUND WORK.
4. FIELD LOCATE EXIST NPW LINE. MODIFY EXIST NPW LINE TO MAKE CONNECTION WITH PROPOSED 6" NPW LINE.

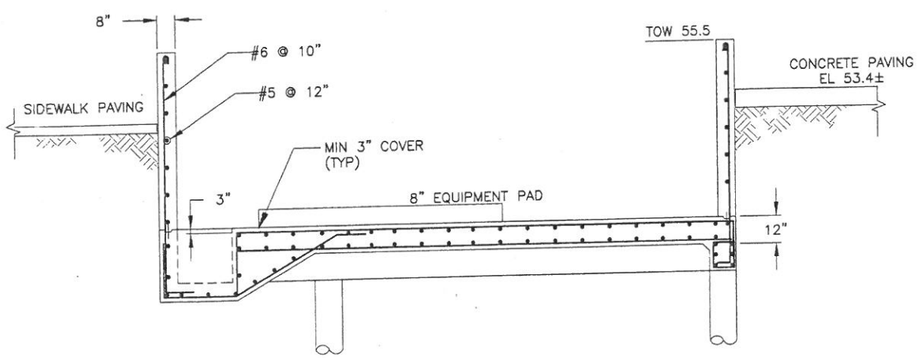

SECTION A
SCALE: 3/8"=1'-0"

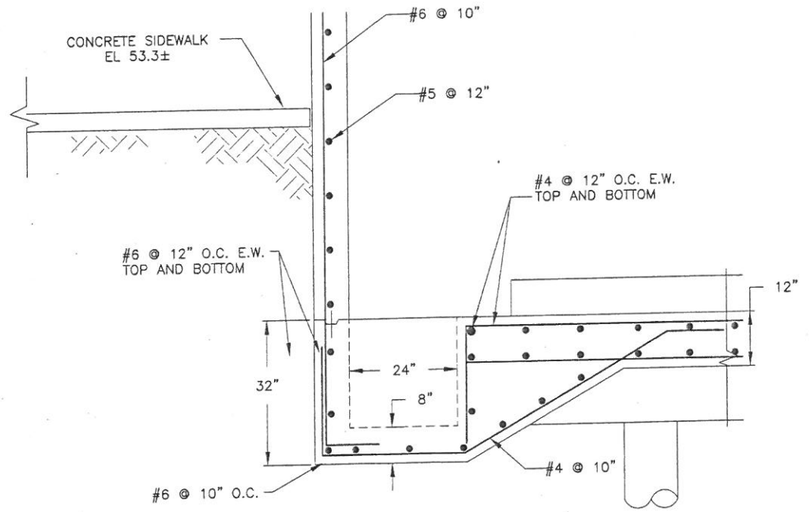

SECTION C
SCALE: 3/4"=1'-0"

No.	Date	Revisions	App.

STATE OF TEXAS
BOBBY T. WHITE
21999
REGISTERED PROFESSIONAL ENGINEER
9/21/2011

Binkley & Barfield, Inc
consulting engineers
Texas Registration Number F-257
1710 Seamist Drive
Houston, Texas 77008-3189
(713) 869-3433

SURVEYED BY: AMANI ENG. | FIELD BOOK NO. : P-5486

CITY OF HOUSTON
DEPARTMENT OF PUBLIC WORKS AND ENGINEERING

ALMEDA SIMS WWTP & SPF IMPROVEMENTS PACKAGE II

NPW STRAINER BACKFLUSH PUMP BASIN STRUCTURE

FILE NO:	-
WBS: R-000298-0005-4	
DRAWING SCALE	
AS NOTED	
CITY OF HOUSTON PM	
IRAJ RANJBAR, P.E.	
DWG NO. :	S-300
SHEET NO.	84 OF 147

PUBLIC WORKS AND ENGINEERING
ACCEPTED & FILED
49061
CITY DRAWING NUMBER
HOUSTON, TEXAS

G:\115805 Almeda Sims Package II\Caud Dwgs_S-300 New Strainer Backflush Pump Basin Structure.dwg Sep 21,2011 - 1:03pm RPD

COLOR TABLE:

ORIGINAL SCALE IN INCHES FOR REDUCED PLANS
0 1 2 3

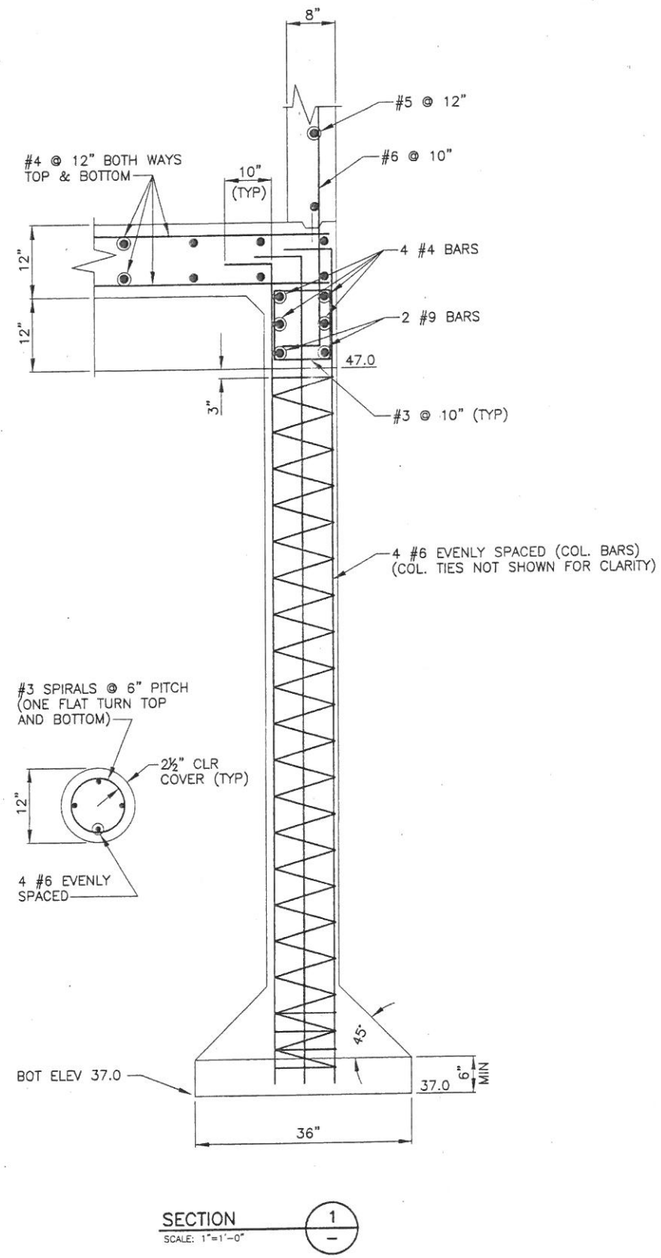

SECTION 1
SCALE: 1"=1'-0"

NOTES:

1. CONTRACTOR SHALL DOWEL IN EXIST CONCRETE TO TIE WITH THE NEW CONCRETE WALLS.
2. CONTRACTOR SHALL PERFORM FIELD PROBING AND POTHOLE TESTING TO LOCATE EXISTING UNDERGROUND PIPES
3. CONTRACTOR SHALL RESTORE THE CONCRETE UPON COMPLETION OF THE UNDERGROUND WORK.
4. FIELD LOCATE EXIST NPW LINE. MODIFY EXIST NPW LINE TO MAKE CONNECTION WITH PROPOSED 6" NPW LINE.

No.	Date	Revisions	App.

STATE OF TEXAS
BOBBY T. WHITE
21999
REGISTERED
PROFESSIONAL ENGINEER
9/24/2011

Binkley & Barfield, Inc
consulting engineers
Texas Registration Number F-257
1710 Seamist Drive
Houston, Texas 77008-3189
(713) 869-3433

SURVEYED BY: AMANI ENG. | FIELD BOOK NO. : P-5486

CITY OF HOUSTON
DEPARTMENT OF PUBLIC WORKS AND ENGINEERING

ALMEDA SIMS WWTP & SPF IMPROVEMENTS PACKAGE II

NPW STRAINER BACKFLUSH PUMP BASIN STRUCTURE DETAIL

FILE NO:	-
WBS: R-000298-0005-4	
DRAWING SCALE	AS NOTED
CITY OF HOUSTON PM	IRAJ RANJBAR, P.E.
DWG NO. :	S-301
SHEET NO.	85 OF 147

PUBLIC WORKS AND ENGINEERING
ACCEPTED & FILED
49061
CITY DRAWING NUMBER
HOUSTON, TEXAS

G:\115805 Almeda Sims Package II\Cadd Dwgs_S-301 New Strainer Backflush Pump Basin STRUCTURE DETAIL.dwg Sep 21,2011 - 1:04pm RPD
COLOR TABLE:
ORIGINAL SCALE IN INCHES FOR REDUCED PLANS
0 1 2 3

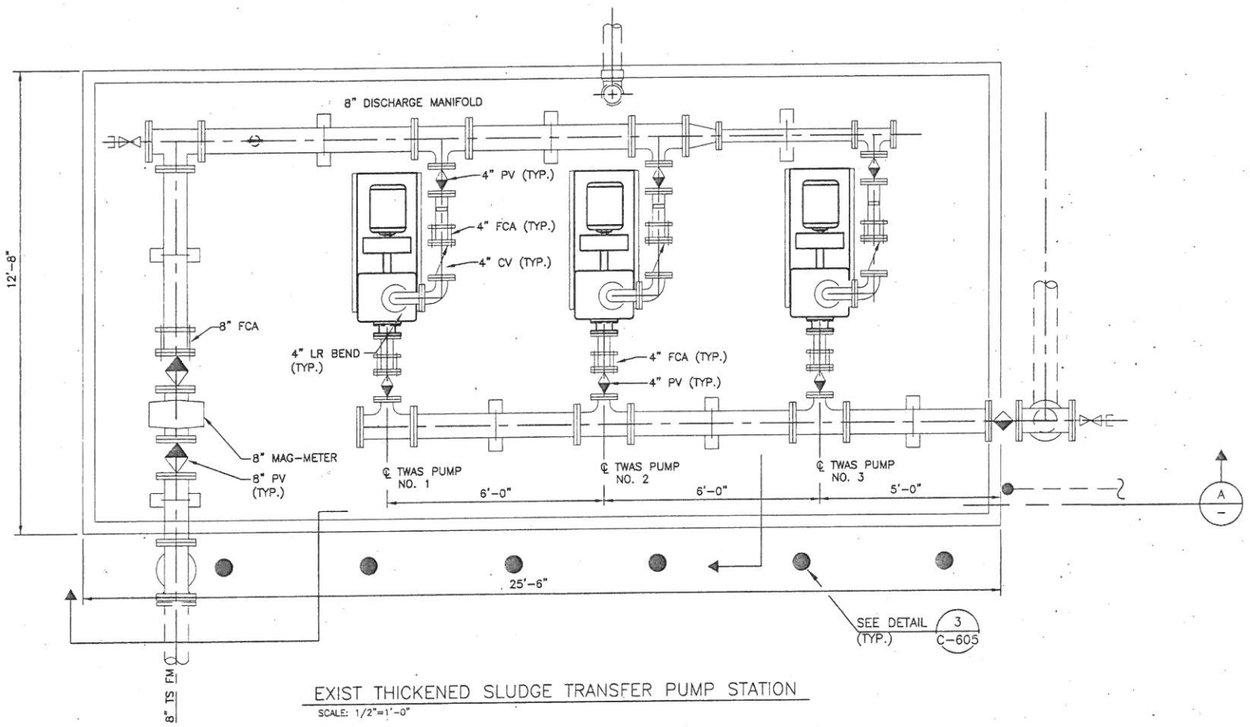

EXIST THICKENED SLUDGE TRANSFER PUMP STATION

SCALE: 1/2"=1'-0"

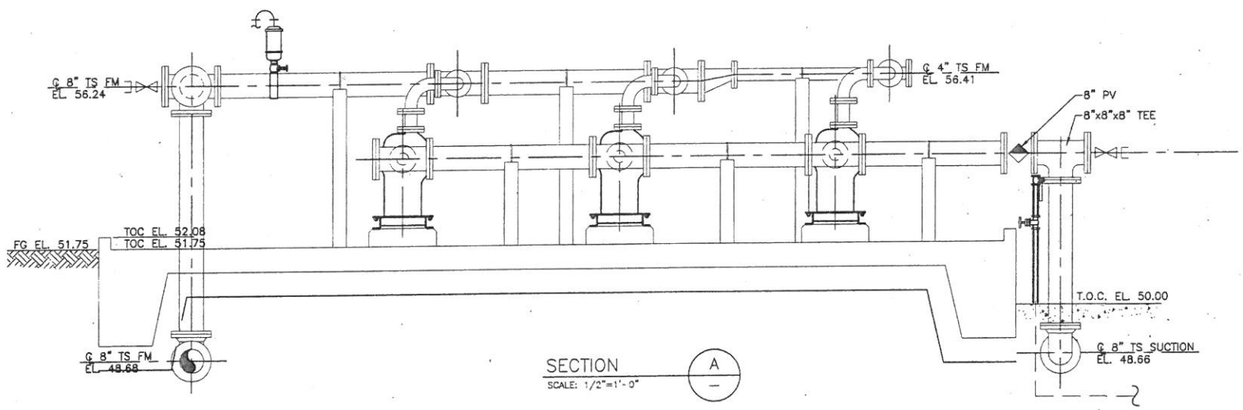

SECTION A

SCALE: 1/2"=1'-0"

EXISTING SLUDGE TRANSFER PUMP STATION MODIFICATION/UPGRADES:

1. EXISTING THICKENED SLUDGE PUMPS: GORMAN-RUPP MODEL T4A3SB WITH 7.5 HP MOTOR.
   TAG NO. TWASP-310, 320 & 330
2. REPLACE EXIT 7.5 HP MOTOR WITH 10 HP MOTOR FOR EACH PUMP.
3. MODIFY EXIST MCC TO INSTALL NEW ELECTRICAL UPGRADES FOR 10 HP MOTOR. SEE ELECTRICAL DRAWINGS FOR DETAILS.
4. RE-SPEED EACH PUMP TO 1300 RPM WITH NEW SHEAVES, BELTS, GEARS AND BUSHINGS. INSTALL NEW PUMP NAME PLATES. RE-ALIGN EACH PUMP AND BALANCE ADJUSTMENT.
5. PERFORM 7-DAY TEST OF PUMP STATION:
   FIRM CAPACITY: 650 GPM AT 45 FT HEAD
   870 GPM AT 40 FT HEAD
   PROVIDE CERTIFIED PUMP TEST REPORT.
6. CONTRACTOR IS RESPONSIBLE FOR LABOR, PARTS, PUMP TESTING AND PUMP STATION STARTUP.

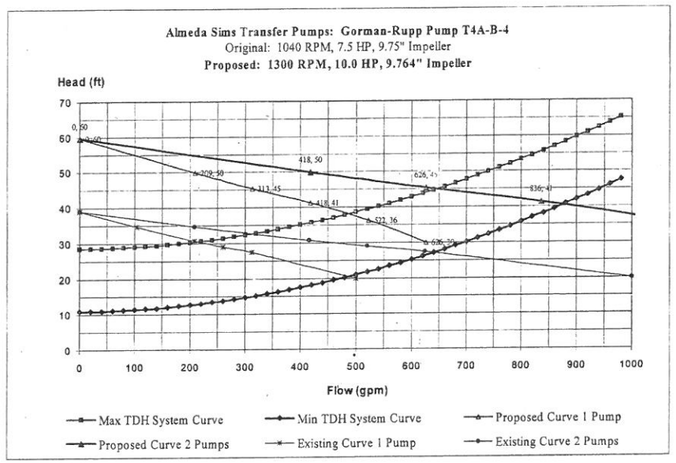

No.	Date	Revisions	App.

STATE OF TEXAS
LI CHUNG CHEN
98576
REGISTERED PROFESSIONAL ENGINEER
1-9-2012

Binkley & Barfield, Inc
consulting engineers
Texas Registration Number F-257
1710 Seamist Drive
Houston, Texas 77008-3189
(713) 869-3433

SURVEYED BY: AMANI ENG. FIELD BOOK NO. : P-5486

CITY OF HOUSTON
DEPARTMENT OF PUBLIC WORKS AND ENGINEERING

ALMEDA SIMS WWTP & SPF IMPROVEMENTS PACKAGE II

SLUDGE TRANSFER PUMP UPGRADE PLAN AND SECTIONS

FILE NO:	-
WBS: R-000298-0005-4	
DRAWING SCALE	
AS SHOWN	
CITY OF HOUSTON PM	
IRAJ RANJBAR, P.E.	
DWG NO. :	M-401
SHEET NO.	86 OF 147

PUBLIC WORKS AND ENGINEERING
ACCEPTED & FILED
49061
CITY DRAWING NUMBER
HOUSTON, TEXAS

G:\115805 Almeda Sims Package II\Cadd Dwgs_M-401 Exist Sludge Pump Station Modification.dwg Jan 10,2012 - 9:45am rpd

COLOR TABLE:

ORIGINAL SCALE IN INCHES FOR REDUCED PLANS
0 1 2 3

G:\115805 Almeda Sims Package II\Cadd Dwgs_E-001 Electrical Site Plan Pkg 1.dwg Jun 10,2012 - 12:45pm rpd

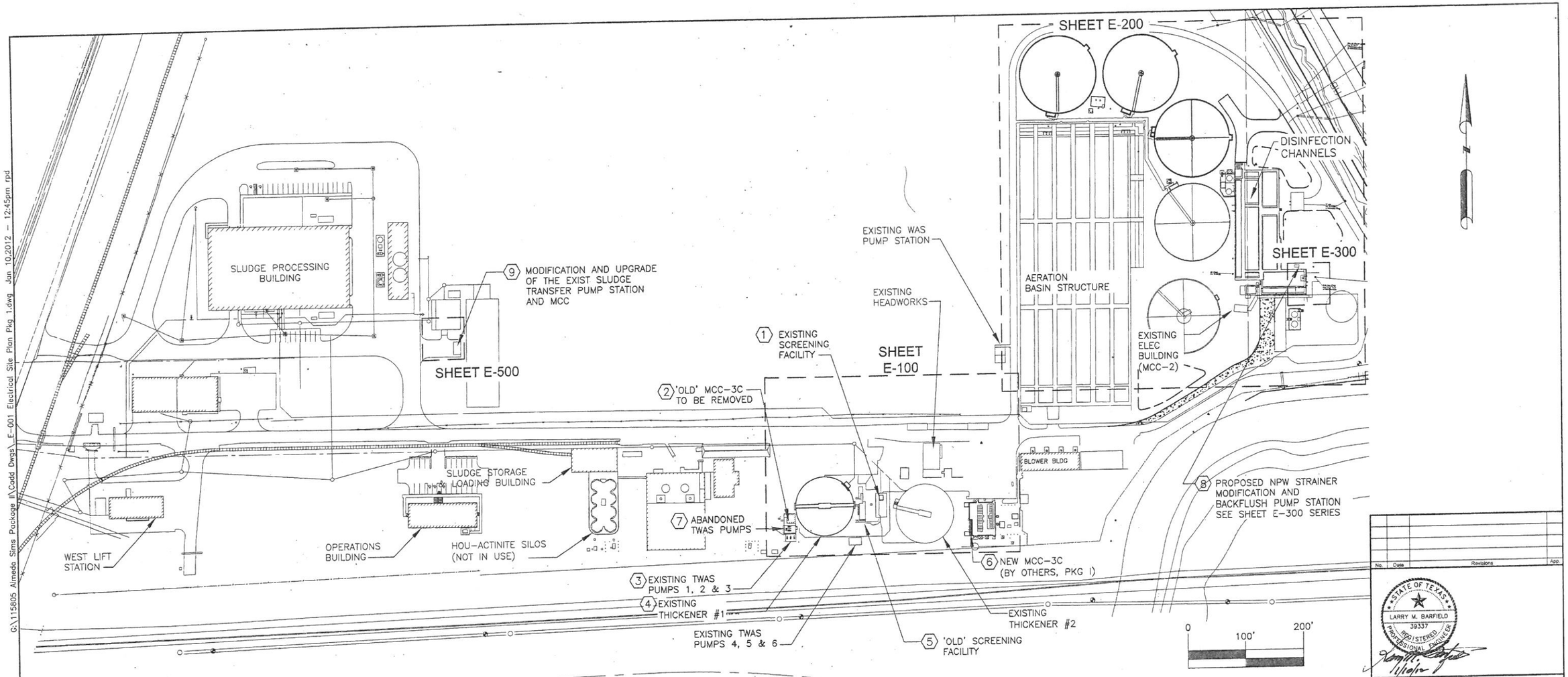

KEYED NOTES:

1. EXISTING SCREENING FACILITY. TO BE PROVIDED WITH THIRD SCREENING MECHANISM. SEE SHEETS E-107 AND E-108
2. 'OLD' MCC-3C TO BE TAKEN OUT OF SERVICE AND DEMOLISHED. SEE SHEET E-109
3. EXISTING TWAS PUMPS 1, 2 & 3. BRANCH CIRCUITS FROM 'OLD' MCC-3C TO BE REPLACED WITH BRANCH CIRCUITS FROM NEW MCC-3C. SEE SHEETS , E-104, & E-105.
4. THICKENER #1 TO BE PROVIDED WITH NEW BRIDGE AND DRIVE MECHANISM. SEE SHEETS E-101, & E-102.
5. 'OLD' SCREENING FACILITY TO BE DEMOLISHED. SEE SHEET E-111.
6. NEW MCC-3C LOCATED IN 2.4KV DISTRIBUTION BUILDING. SEE SHEET E-103.
7. ABANDONED TWAS PUMPS TO BE DEMOLISHED. SEE SHEET E-110.
8. MODIFICATION TO THE EXISTING NPW STRAINERS AND A PROPOSED NPW STRAINER BACKFLUSH PUMP STATION. SEE SHEETS E-300 SERIES.+
9. MODIFICATION TO THE EXISTING SLUDGE TRANSFER PUMP STATION AND ELECTRICAL IN MCC. SEE SHEET E-500 SERIES

COLOR TABLE:

ORIGINAL SCALE IN INCHES FOR REDUCED PLANS
0 1 2 3

No.	Date	Revisions	App.

STATE OF TEXAS
LARRY M. BARFIELD
39337
REGISTERED PROFESSIONAL ENGINEER

Binkley & Barfield, Inc
consulting engineers
Texas Registration Number F-257
1710 Seamist Drive
Houston, Texas 77008-3189
(713) 869-3433

SURVEYED BY: AMANI ENG. | FIELD BOOK NO. : P-5486

CITY OF HOUSTON
DEPARTMENT OF PUBLIC WORKS AND ENGINEERING

ALMEDA SIMS WWTP & SPF IMPROVEMENTS PACKAGE II

ELECTRICAL SITE PLAN OVERALL

FILE NO:	-
WBS: R-000298-0005-4	
DRAWING SCALE	
AS NOTED	
CITY OF HOUSTON PM	
IRAJ RANJBAR, P.E.	
DWG NO. :	E-001
SHEET NO.	87 OF 147

PUBLIC WORKS AND ENGINEERING
ACCEPTED & FILED
49061
CITY DRAWING NUMBER
HOUSTON, TEXAS

G:\15805 Almeda Sims Package II\Cadd Dwgs\E-002 Electrical Legends & Symbols.dwg Sep 20,2011 - 4:15pm RPD

COLOR TABLE:

ORIGINAL SCALE IN INCHES
FOR REDUCED PLANS
0 1 2 3

DRAWING TYPE

SINGLE LINE	CONTROL SCHEMATIC	PLAN

DESCRIPTION

MEDIUM VOLTAGE DRAWOUT POWER CIRCUIT BREAKER CS=CONTROL SWITCH

LOW VOLTAGE AIR CIRCUIT OR MOLDED CASE BREAKER, 3 POLE UNLESS OTHERWISE NOTED

COMBINATION MAGNETIC MOTOR STARTER, FULL VOLTAGE NON-REVERSING UNLESS NOTED OTHERWISE:
* FVR – FULL VOLTAGE REVERSING
RVNR – REDUCED VOLTAGE NON-REVERSING
2S1W – TWO SPEED, ONE WINDING
2S2W – TWO SPEED, TWO WINDING
* SIZE OF STARTER

NON-FUSIBLE DISCONNECT SWITCH, 600 VOLT, 3 POLE, * AMPERE RATING NOTED IF OTHER THAN 30A

FUSIBLE DISCONNECT SWITCH 600 VOLT, 3 POLE. AMPERE RATING AND FUZE SIZE AS NOTED
* AMPERE RATING NOTED IF OTHER THAN 30A
* FUSE RATING EXAMPLE 15

MANUAL MOTOR STARTER WITH THERMAL OVERLOAD HEATER. "P" INDICATES WITH PILOT LIGHT, "2" INDICATES 2 POLE

DRAWOUT TYPE EQUIPMENT OR DEVICE

MEDIUM VOLTAGE CABLE TERMINATION

MEDIUM VOLTAGE AIR INTERRUPTER SWITCH

MEDIUM VOLTAGE FUSED AIR INTERRUPTER SWITCH

MEDIUM VOLTAGE FUSED MOTOR CONTROLLER

TRANSFORMER, RATING AND CONNECTIONS AS NOTED
** TRANSFORMER IDENTIFICATION NUMBER

CURRENT TRANSFORMER
* QUANTITY; A = PRIMARY AMPERES

POTENTIAL TRANSFORMER
* QUANTITY; V = PRIMARY VOLTAGE

GENERATOR, RATINGS CONNECTIONS AS NOTED

AUTOMATIC TRANSFER SWITCH #1 (ATS 1)
"N" INDICATES NORMAL SOURCE.
"S" INDICATES STANDBY SOURCE.
100A INDICATES CONTINUOUS CURRENT RATING.

VARIABLE SPEED DRIVE CONTROLLER
* D.C. = D.C. DRIVE CONTROLLER
SCR = SILICON CONTROLLED RECTIFIER
VFD = VARIABLE FREQUENCY DRIVE

UNIT HEATER – ELECTRIC HEATING COIL AND FAN

MOTOR OPERATED VALVE

MOTOR, NUMERAL INDICATES HORSEPOWER

VOLTMETER WITH SWITCH, 3 PHASE
* RANGE AS NOTED, EXAMPLE 0–600V

AMMETER WITH SWITCH, 3 PHASE
* RANGE AS NOTED, EXAMPLE 0–800A

METER
* WM – WATTMETER
WHM – WATTHOUR METER
WHDM – WATTHOUR DEMAND METER
WHDR – WATTHOUR DEMAND RECORDER
PF – POWER FACTOR METER
RT – RUNNING TIME METER

TRANSDUCER
* AX – CURRENT TRANSDUCER
WX – WATT TRANSDUCER

SPECIAL CAPACITOR – * REPRESENTS:
"SC"= SURGE CAPACITOR
"PF"= POWER FACTOR CORRECTION CAPACITOR

RELAY, NO. AS INDICATED
27 – UNDERVOLTAGE RELAY
38 – BEARING PROTECTIVE DEVICE
40 – LOSS OF EXCITATION RELAY
42 – RUNNING CONTACTOR / PILOT RELAY
46 – REVERSE PHASE, / PHASE BALANCE, CURRENT RELAY
47 – PHASE SEQUENCE VOLTAGE RELAY
49 – MACHINE OR TRANSFORMER THERMAL RELAY
50 – INSTANTANEOUS OVERCURRENT RELAY
51 – TIME OVERCURRENT RELAY
51G – TIME OVERCURRENT RELAY, GROUNDING RESISTOR TYPE
51N – TIME OVERCURRENT RELAY, RESIDUAL TYPE
51V – TIME OVERCURRENT RELAY W/ VOLTAGE RESTRAINT
60 – NEGATIVE SEQUENCE VOLTAGE RELAY
62 – TIME DELAY RELAY
63 – OVERPRESSURE RELAY
86 – LOCKING-OUT RELAY
87 – DIFFERENTIAL PROTECTIVE RELAY
B – SUFFIX INDICATES "BUS"
G – SUFFIX INDICATES "GENERATOR"
T – SUFFIX INDICATES "TRANSFORMER"
X – SUFFIX INDICATES "AUXILIARY"

DRAWING TYPE

SINGLE LINE	CONTROL SCHEMATIC	PLAN

DESCRIPTION

PUSHBUTTON, CONTROL STATION OR SELECTOR SWITCH REFER TO SCHEMATIC FOR TYPE AND SIZE OF STATION

PUSHBUTTON, MOMENTARY CONTACT, SPRING RETURN NORMALLY CLOSED

PUSHBUTTON, MOMENTARY CONTACT, SPRING RETURN NORMALLY OPEN

EMERGENCY STOP PUSHBUTTON WITH RED MUSHROOM HEAD OPERATOR (MAINTAINED CONTACT)

START–STOP PUSHBUTTON CONTROL STATION (MOMENTARY CONTACT)

START–STOP PUSHBUTTON CONTROL STATION, MAINTAINED CONTACT WITH LOCKOUT DEVICE ON STOP

OFF/ON SELECTOR SWITCH

LOCAL/REMOTE SELECTOR SWITCH

THREE POSITION SELECTOR SWITCH, MAINTAINED CONTACT
O–OPEN X–CLOSED

POSITION	TOP CONTACT	BOTTOM CONTACT
A	X	X
B	0	0
C	0	0

* NAMEPLATE (A/B/C)
HOA – HAND/OFF/AUTO
HOR – HAND/OFF/REMOTE
LOR – LOCAL/OFF/REMOTE
RSL – RAISE/STOP/LOWER
TOA – TEST/OFF/AUTO

** = EQUIPMENT IDENTIFICATION

ALL PANELS, STARTERS, DISCONNECT, ETC., WITHIN THE ROOM NOTED TO HAVE ENCLOSURES W/ NEMA TYPE # ENCLOSURES (EXCEPT AS SPECIFICALLY NOTED) AS A MINIMUM. MORE STRINGENT REQUIREMENTS MAY BE REQUIRED BY THE SPECIFICATIONS FOR SPECIFIC PIECES OF EQUIPMENT

MOTOR STARTER COIL, NUMBER AS INDICATED

CONTROL RELAY COIL, NUMBER AS INDICATED

PILOT LIGHT, COLOR AS NOTED
* R – RED B – BLUE A – AMBER
G – GREEN W – WHITE

TIME DELAY RELAY
* = RANGE AS NOTED
* = SETPOINT AS NOTED
TDE – TIME DELAY AFTER ENERGIZATION – ON DELAY
TDD – TIME DELAY AFTER DE_ENERGIZATION – OFF DELAY

PILOT LIGHT, PUSH TO TEST TYPE
* COLOR AS NOTED ABOVE

NOTC –NORMALLY OPEN, TIMED CLOSING WHEN ENERGIZED

NCTO –NORMALLY CLOSED, TIMED OPENING WHEN ENERGIZED

NOTO –NORMALLY OPEN, TIMED OPENING WHEN DE–ENERGIZED

NCTC –NORMALLY CLOSED, TIMED CLOSING WHEN DE–ENERGIZED

RUNNING TIME METER

CONDUCTORS OR CONDUITS CROSSING PATHS BUT NOT CONNECTED

CONDUCTORS ELECTRICALLY CONNECTED

SOLENOID OPERATED VALVE

STRIP HEATER OR HEATING ELEMENT

RESISTOR

DIODE

CONTACT, NORMALLY OPEN (NO)

CONTACT, NORMALLY CLOSED (NC)

OVERLOAD RELAY HEATER

DRAWING TYPE

SINGLE LINE	CONTROL SCHEMATIC	PLAN

DESCRIPTION

RESISTANCE TEMPERATURE DETECTOR

FIELD INSTRUMENT, TAG NO. AS INDICATED
* – INDICATES INSTRUMENT TYPE DEFINED ON LOOP SHEETS
– INDICATES LOOP NO.

PRESSURE OR VACUUM SWITCH
NORMALLY OPEN, CLOSES ON RISING PRESSURE
NORMALLY OPEN, CLOSES ON DROPPING PRESSURE
NORMALLY CLOSED, OPENS ON RISING PRESSURE
NORMALLY CLOSED, OPENS ON DROPPING PRESSURE

TEMPERATURE SWITCH OR THERMOSTAT
NORMALLY OPEN, CLOSES ON RISING TEMPERATURE
NORMALLY OPEN, CLOSES ON DROPPING TEMPERATURE
NORMALLY CLOSED, OPENS ON RISING TEMPERATURE
NORMALLY CLOSED, OPENS ON DROPPING TEMPERATURE

FLOW SWITCH (AIR, WATER, ETC.)
NORMALLY OPEN, CLOSES ON INCREASED FLOW
NORMALLY CLOSED, OPENS ON INCREASED FLOW

POSITION (LIMIT) SWITCH
NORMALLY OPEN
NORMALLY OPEN – HELD CLOSED
NORMALLY CLOSED
NORMALLY CLOSED – HELD OPEN

TORQUE SWITCH
NORMALLY CLOSED, OPENS ON HIGH TORQUE

LIQUID LEVEL (FLOAT) SWITCH
NORMALLY OPEN, CLOSES ON RISING LEVEL
NORMALLY CLOSED, OPENS ON RISING LEVEL

UTILIZED IN CONJUNCTION WITH OTHER CONTROL SCHEMATIC SYMBOLS TO DEPICT THE PHYSICAL LOCATION OF THE DEVICE
# REPRESENTS
1 = DEVICE IN FIELD
2 = DEVICE AT MCC

LIGHTNING ARRESTER

GROUND OR GROUND ROD

EXISTING GROUND WELL

EXISTING GROUND WIRE CONNECTION (EXOTHERMIC WELD)

PROPOSED GROUND WELL

PROPOSED GROUND WIRE CONNECTION (EXOTHERMIC WELD)

PROPOSED GROUND WIRE CONNECTION (MECHANICAL LUG OR FITTING)

SUPPORT COLUMN WITH REBAR CAGE

GROUND WIRE

FUSE, AMPERE RATING AS NOTED.

KEY INTERLOCK

TERMINAL OR TEST BLOCK

MECHANICAL CONNECTION OR INTERLOCK

CONDUIT TURNING UP

CONDUIT TURNING DOWN

CONDUIT STUBBED OUT AND CAPPED

CONDUIT RUN EXPOSED, (3#12, 1#12G, 3/4"C UNLESS OTHERWISE NOTED)

CONDUIT RUN CONCEALED

FLEXIBLE METAL CONDUIT "WHIP" (3#12, 1#12G, 3/4"C UNLESS OTHERWISE NOTED) FOR RECESSED LIGHTING FIXTURES AND LIQUID TITE MOTOR CONNECTIONS

SINGLE HOMERUN TO PANEL, WITH CIRCUIT NUMBER AS INDICATED

MULTIPLE OR 3 PHASE CIRCUIT TO PANEL IN SAME CONDUIT, WITH CIRCUIT NUMBERS AS INDICATED

** = CONDUIT AND CABLE CALLOUT

DRAWING TYPE

SINGLE LINE	CONTROL SCHEMATIC	PLAN

DESCRIPTION

MEDIUM VOLTAGE MANHOLE

POWER PULL BOX OR HAND HOLE

SCADA PULL BOX OR HAND HOLE

CONTROL PULL BOX OR HAND HOLE

JUNCTION BOX

TELEPHONE CABINET OR BACKBOARD AS NOTED

INCANDESCENT, OR H.I.D. TYPE LIGHTING FIXTURE, "A" INDICATES FIXTURE TYPE.

FLUORESCENT LIGHTING FIXTURE, NOTATIONS SAME AS ABOVE

WALL OUTLET AND INCANDESCENT, OR H.I.D. LIGHTING FIXTURE, NOTATIONS SAME AS ABOVE

WALL MOUNTED EXIT LIGHT (WITH OR WITHOUT DIRECTIONAL ARROWS AS INDICATED)

CEILING MOUNTED EXIT LIGHT (WITH OR WITHOUT DIRECTIONAL ARROWS AS INDICATED)

LETTERS INDICATE TYPE OF FIXTURE

SINGLE POLE SWITCH, "b" – LETTER "b" INDICATES SWITCHLEG SHALL CONTROL LIGHT FIXTURES WITH "b" DESIGNATION

DOUBLE POLE SWITCH, "a" – LETTER "a" INDICATES SWITCHLEG SHALL CONROL LIGHT FIXTURES WITH "a" DESIGNATION

THREE WAY SWITCH, "c" – LETTER "c" INDICATES SWITCHLEG SHALL CONTROL LIGHT FIXTURES WITH "c" DESIGNATION

DOUBLE POLE SWITCH, "a" – LETTER "a" INDICATES SWITCHLEG SHALL CONTROL LIGHT FIXTURES WITH "a" DESIGNATION

MOMENTARY CONTACT SWITCH, CENTER OFF

SINGLE POLE SWITCH AND PILOT LIGHT

OCCUPANCY SENSOR SWITCH

OCCUPANCY SENSOR – CEILING MOUNTED

480V OR 480/277V PANEL.

120/240V OR 120/208V PANEL

SINGLE RECEPTACLE. CURRENT & VOLTAGE AS NOTED

DUPLEX RECEPTACLE, 20A, 120V, 2P, 3W
* C – MOUNTED ABOVE COUNTER TOP
GFCI – GROUND FAULT INTERRUPTER TYPE
WP – WEATHERPROOF
T – TRANSIENT VOLTAGE SURGE SUPPRESSOR
IG – ISOLATED GROUND
ORANGE DEVICE – ISOLATED GROUND
RED DEVICE – EMER GEN CIRCUIT

SPECIAL RECEPTACLE, SEE RECEPTACLE SCHEDULE

TELEPHONE HANDSET, DESK TYPE, K=KEY SYSTEM

TELEPHONE HANDSET, WALL TYPE, K=KEY SYSTEM

PAGE/PARTY TELEPHONE HANDSET, DESK TYPE

PAGE/PARTY TELEPHONE HANDSET, WALL TYPE (MOUNT UP 4'–8")

PAGING SPEAKER, WALL MOUNTED, "H1, H2" DENOTES HORN TYPE, "W" DENOTES WIDE ANGLE TYPE

PAGING SPEAKER, BI–DIRECTIONAL, WALL MOUNTED, H = HORN TYPE

PAGING SPEAKER, FLUSH MOUNTED CEILING TYPE

PAGING SPEAKER AMPLIFIER ASSEMBLY

FLOOR OUTLET BOX WITH TYPE OUTLET INDICATED

UNDERFLOOR DUCT SYSTEM WITH TYPE OUTLESTS INDICATED

J–CELL UNDERFLOOR DUCT SYSTEM JUNCTION BOX

GENERAL DRAWING SYMBOLS

TITLE
COMMENTS
/ E–** — DETAIL #, SHEET

DETAIL CALLOUT TITLE

DETAIL #, SHEET #, E–**

DETAIL CALLOUT REFERENCE
SEE DETAIL #, SHEET E–**

No.	Date	Revisions	App.

STATE OF TEXAS
LARRY M. BARFIELD
39337
REGISTERED
PROFESSIONAL ENGINEER
9-7-11

Binkley & Barfield, Inc
consulting engineers
Texas Registration Number F-257
1710 Seamist Drive
Houston, Texas 77008-3169
(713) 868-3433

SURVEYED BY: AMANI ENG. FIELD BOOK NO. : P–5486

CITY OF HOUSTON
DEPARTMENT OF PUBLIC WORKS AND ENGINEERING

ALMEDA SIMS WWTP & SPF IMPROVEMENTS PACKAGE II

ELECTRICAL LEGENDS AND SYMBOLS

FILE NO:	–
WBS: R–000298–0005–4	
DRAWING SCALE	NTS
CITY OF HOUSTON PM	IRAJ RANJBAR, P.E.
DWG NO. :	E–002
SHEET NO. 88 OF 147	

PUBLIC WORKS AND ENGINEERING
ACCEPTED & FILED
49061–
CITY DRAWING NUMBER
HOUSTON, TEXAS

G:\IS603 Almeda Sims Package II\Cadd Dwgs_E-003 Electrical Notes.dwg Sep 20,2011 - 4:19pm RPD

COLOR TABLE:

ORIGINAL SCALE IN INCHES
FOR REDUCED PLANS
0 1 2 3

ELECTRICAL PLAN GENERAL NOTES

1. REFER TO SHEET G-101 FOR DRAWING LIST. REFER TO DIV. 13, 14, 15 & 16 SPECIFICATIONS FOR ADDITIONAL INFORMATION AND REQUIREMENTS.
2. REFER TO STRUCTURAL/CIVIL PLANS FOR THE EXACT LOCATION AND ANY ADDITIONAL REQUIREMENTS FOR ALL STRUCTURAL/CIVIL EQUIPMENT.
3. THE ELECTRICAL CONTRACTOR SHALL PROVIDE RING AND BACK BOX FOR DEVICE SUPPORT, WITH PULL LINE TO CEILING AT EACH POSITION INDICATED TO HAVE A DATA AND /OR TELEPHONE OUTLET.
4. REFER TO THE CIVIL PLANS FOR THE FINISHED, EXACT LOCATION, MOUNTING DETAILS AND HEIGHT OF ALL DEVICES. THE DIV. 16 CONTRACTOR SHALL COORDINATE THE LOCATION OF ALL WALL AND CEILING DEVICES, SWITCHES, RECEPTACLES, OUTLETS, AND ACCESS DOORS WITH THE CIVIL ENGINEER PRIOR TO ROUGH-IN.
5. VERIFY ALL EQUIPMENT DIMENSIONS AND STUB UP LOCATIONS PRIOR TO ORDERING OR INSTALLING ANY EQUIPMENT OR STUBBING UP ANY DUCTS.
6. ROTATING EQUIPMENT ROTATION DIRECTION SHALL BE FIELD-VERIFIED FOR ALL ROTATING LOADS PRIOR TO MAKING ANY FINAL CONNECTIONS. ROTATION OF EXISTING EQUIPMENT SHALL BE NOTED PRIOR TO DE-ENERGIZING AND RECONNECTIONS SHALL BE MADE IDENTICALLY TO PREVIOUS EQUIPMENT CONNECTIONS.
7. REFER TO ELECTRICAL SCHEDULES FOR TABLES FOR CONDUIT ASSIGNMENTS TO SPECIFIC EQUIPMENT AND RACK LOCATIONS.
8. ALL DEDICATED RECEPTACLES (CIRCUITS WITH ONE RECEPTACLE PER 20A CIRCUIT) SHALL BE NEMA 5-20R UNLESS OTHERWISE NOTED. (NO 15 AMP CIRCUIT SHALL BE PERMITTED).
9. GENERAL WIRING NOTES:
   - A) UNLESS OTHERWISE NOTED, ALL OUTDOOR AND CONDUITS IN CORROSIVE AREAS SHALL BE PVC COATED RIGID GALVANIZED. INTERIOR EXPOSED CONDUITS IN BUILDINGS AND ELECTRICAL ROOMS SHALL BE RIGID GALVANIZED.
   - B) ALL REDUCTIONS IN PVC COATED CONDUIT SIZE AT FITTING HUBS SHALL BE MADE WITH PVC COATED TYPE REC REDUCING COUPLINGS AND NIPPLES. TYPE RE REDUCING BUSHINGS SHALL NOT BE APPROVED.
   - C) ALL INDIVIDUAL HOME RUNS INDICATED ON THE DRAWINGS SHALL HAVE INDIVIDUAL PHASE, NEUTRAL, AND GROUND CONDUCTORS BROUGHT BACK TO THE PANELBOARD.
   - D) FOR 20 AMP CIRCUITS, NOT MORE THAN 9-#12AWG CURRENT CARRYING CONDUCTORS SHALL BE INSTALLED IN EACH RACEWAY.
   - E) MULTIWIRE BRANCH CIRCUITS, I.E. COMMON NEUTRAL CONDUCTORS, SHALL NOT BE USED FOR RECEPTACLES IN OFFICES OR AREAS WITH OFFICE OR COMPUTER EQUIPMENT. THESE CIRCUITS SHALL HAVE DEDICATED NEUTRAL CONDUCTORS.
   - F) ALL 120 VOLT, 20 AMP HOME RUNS LONGER THAN 100' AND ALL 277 VOLT, 20 AMP HOME RUNS LONGER THAN 150' SHALL BE #10AWG MINIMUM. THIS SHALL OVERRIDE THE CONDUCTOR SIZE LISTED IN THE PANEL SCHEDULES.
   - G) TYPE AC OR MC CABLE SHALL NOT BE PERMITTED.
   - H) JUNCTION BOXES ABOVE THE CEILING SHALL BE RIGIDLY SUPPORTED FROM THE BUILDING STRUCTURE. BOXES SHALL NOT BE SUPPORTED FROM THE CEILING SUPPORT WIRES.
   - I) EXTERIOR COVER PLATES OF ALL NEW AND EXISTING JUNCTION BOXES SHALL BE CLEARLY MARKED TO INDICATE THE CIRCUIT NUMBER(S) ENCLOSED WITHIN THE JUNCTION BOX.
   - J) ALL CONDUITS CONTAINING CURRENT CARRYING CONDUCTORS SHALL BE SUPPLIED WITH AN EQUIPMENT GROUND WIRE SIZED IN ACCORDANCE WITH THE 2005 N.E.C. AND ALL APPLICABLE CODES. REFER TO THE PANEL SCHEDULES AND DISTRIBUTION DIAGRAM FOR FURTHER SIZING REQUIREMENTS.
   - K) SIZE #12 AWG AND LARGER CONDUCTORS SHALL BE STRANDED COPPER. INSULATION SHALL BE TYPE THHN OR THWN, EXCEPT UNDERGROUND. ALL UNDERGROUND CONDUCTORS SHALL BE TYPE XHHW.
10. HVAC EQUIPMENT CONDUITS SHALL BE ROUTED IN CEILING STRUCTURE. FINAL CONNECTIONS SHALL BE FLEXIBLE CONDUIT, APPROPRIATELY RATED FOR THE APPLICATION. EACH SEGMENT OF FLEXIBLE CONDUIT USED SHALL NOT EXCEED SIX FEET IN LENGTH.
11. ALL WIRE SIZES NOT SPECIFICALLY NOTED ON THE DRAWINGS SHALL BE 2-12 AWG AND 1-12 AWG GROUND.

EQUIPMENT DISPOSAL/RETURN TO OWNER

1. OWNER RESERVES THE RIGHT OF RETURN OF ALL EQUIPMENT REMOVED IN THIS PROJECT TO AN AUTHORIZED STORAGE FACILITY OF HIS CHOICE OR REFUSAL IF EQUIPMENT IS DEEMED NOT RECOVERABLE BY THE OWNER. OWNER SHALL BE CONSULTED PRIOR TO DISPOSAL OF ANY WIRE, CONDUIT, OR OTHER EQUIPMENT REMOVED IN THIS PROJECT.
2. ANY PROPERTY TO BE DISCARDED SHALL BE DISPOSED OF IN AN APPROVED MANNER IN ACCORDANCE WITH ALL APPLICABLE CODES AND REGULATIONS, AT THE COST OF THE CONTRACTOR.

GENERAL LIGHTING NOTES

1. THE MOUNTING HEIGHT AND ARRANGEMENT OF LIGHT FIXTURES MAY REQUIRE ADJUSTMENT DUE TO FIELD CONDITIONS. THE HEIGHT AND LOCATIONS SHALL BE ADJUSTED AS REQUIRED TO ACCOMMODATE CONFLICTS. PROVIDE ADDITIONAL WIRE LENGTHS OF AT LEAST SIX FEET FOR SUCH ADJUSTMENTS.
2. MOUNTING HEIGHTS ARE TO BE EVEN WITH THE LOWEST CEILING STRUCTURAL MEMBER OR LOWEST PIPE, PIPE HANGER, OR HVAC DUCT SO THAT NO DEVICE OR STRUCTURE EXTENDS BELOW THE BOTTOM OF ANY LIGHT FIXTURE.
3. VERIFY ALL LIGHT FIXTURE AND OTHER EQUIPMENT VOLTAGES PRIOR TO ORDERING ANY EQUIPMENT.
4. CONTRACTOR SHALL LIMIT CONSTRUCTION ACTIVITIES TO AVOID CREATION OF EXCESSIVE NOISE OR DUST.
5. CONTRACTOR SHALL PROVIDE ALL NECESSARY SAFETY BARRICADES, LIGHTS, AND FENCE TO PROTECT WORKMEN AND OTHERS AT AL TIMES. PROVIDE SIGNS WHERE NECESSARY TO IDENTIFY HAZARDS OR OTHER SAFETY ALERTS. SEE GENERAL CONSTRUCTION NOTES.
6. CONTRACTOR SHALL MAINTAIN THE WORK SITE IN A NEAT AND CLEAN MANNER AT ALL TIMES.

GENERAL ELECTRICAL NOTES

1. SWITCHBOARDS, TRANSFORMERS AND ANY OTHER FREE STANDING EQUIPMENT SHALL BE SET ON CONCRETE PADS NOT LESS THAN 3" ABOVE FINISHED FLOOR AND EXTEND 6" OUT FROM EQUIPMENT IN ALL DIRECTIONS (INDOORS). EQUIPMENT INSTALLED OUTDOORS SHALL BE ON A PAD AT LEAST 12" ABOVE GRADE AND BASES SHALL EXTEND A MINIMUM OF 24" OUT FROM EQUIPMENT IN ALL DIRECTIONS.
2. 120 VOLT RECEPTACLE CIRCUITS AND 277 VOLT LIGHTING CIRCUITS SHALL BE ROUTED IN SEPARATE RACEWAYS.
3. A GROUNDING CONDUCTOR SHALL BE PROVIDED WITH ALL FEEDERS AND BRANCH CIRCUITS (SIZE BASED ON THE N.E.C.) OR AS INDICATED ON PLANS.
4. ALL BRANCH CIRCUITS CONDUITS SHALL BE ROUTED OVERHEAD. CONDUITS SERVING FLOOR OUTLETS MAY BE ROUTED IN THE SLAB.
5. CONDUIT AND WIRING SHOWN ON DRAWINGS MAY BE COMBINED IN THE SAME RACEWAYS TO REDUCE THE NUMBER OF RACEWAYS TO PANELS AS LONG AS CONDUCTOR AND RACEWAY SIZES ARE IN COMPLIANCE WITH N.E.C. REQUIREMENTS.
6. TRANSFORMERS, INCLUDING UNIT SUBSTATIONS, SHALL BE PROVIDED WITH RESILIENT CUSHION VIBRATION DAMPENERS. ALL SUCH DAMPENERS SHALL BE PROVIDED BY EQUIPMENT MANUFACTURER AND INSTALLED PER MANUFACTURERS' PUBLISHED REQUIREMENTS AND RECOMMENDATIONS.
7. ALL UNDERGROUND RACEWAY CONSTRUCTION SHALL BE IN DUCT BANK PER DETAILS. PROVIDE INTERMEDIATE PULLBOX FOR ALL RUNS GREATER THAN 150 FT.
8. ALL KNOWN EXISTING UNDERGROUND DUCT BANKS AND OTHER CIVIL FEATURES ARE SHOWN ON DRAWINGS. NOT ALL CONSTRUCTION DRAWINGS ARE AVAILABLE, AND AS SUCH, THERE ARE POSSIBLE UNDERGROUND CONFLICTS WHICH ARE NOT SHOWN. THE CONTRACTOR SHALL EXERCISE CAUTION WHEN EXCAVATING AND SHALL HAND DIG AS REQUIRED TO PRESERVE EXISTING DUCTS, CABLES, AND OTHER CIVIL FEATURES. THE CONTRACTOR SHALL NOTIFY THE CITY ENGINEER IN ALL CASES WHERE UNKNOWN UNDERGROUND OBSTACLES ARE DETECTED.
9. WHEN PLANS REQUIRES REUSE OF EXISTING CONDUIT IF IT'S IN GOOD CONDITION, CONTRACTOR SHALL EXAM THE EXISTING CONDUIT BY THE FOLLOWING CRITERIA: PLASTIC COATING UNDAMAGED, NO NICKS OR BREAKS; AND NO RUST IN OR OUTSIDE OF CONDUIT, AND THREADS UNDAMAGED.

LIGHTNING PROTECTION REQUIREMENTS

A LIGHTNING PROTECTION SYSTEM SHALL BE INSTALLED ON THE ROOF OF NEW BUILDINGS AND EQUIPMENT, AND ON BUILDINGS WHERE NEW EQUIPMENT IS BEING INSTALLED. SEE SPECIFICATIONS FOR FURTHER INFORMATION. ALL WORK MUST BE IN COMPLIANCE WITH LIGHTNING PROTECTION SPECIFICATIONS SECTION, NFPA 780, AND INSTALLATION SHALL BE CERTIFIED

MOTOR PROTECTION RELAY SETTINGS

1. CONTRACTOR SHALL PROVIDE MULTILIN RELAY SETTINGS FOR MOTORS AS DESIGNATED AND PERFORM ALL REQUIRED SETTINGS AND PROGRAMMING. WINDING RTD'S SHALL BE SET TO ALARM AT NO HIGHER THAN 140 DEGREE C. (BASED ON 155 DEGREE C. INSULATION SYSTEM) AND TRIP MOTORS AT NO HIGHER THAN 145 DEGREE C. CONTRACTOR SHALL VERIFY THESE SETTINGS WITH MOTOR MANUFACTURER SELECTED AND USE MANUFACTURER'S STANDARD SETTINGS IF DIFFERENT FROM ABOVE.

GENERAL CONSTRUCTION NOTES

1. THESE PLANS DO NOT EXTEND TO OR INCLUDE DESIGNS OR SYSTEMS PERTAINING TO THE SAFETY OF CONSTRUCTION CONTRACTOR OR ITS EMPLOYEES, AGENTS, OF REPRESENTATIVES IN THE PERFORMANCE OF THE WORK. THE SEAL HEREON DOES NOT EXTEND TO ANY SUCH SAFETY SYSTEMS THAT MAY NOW OR HEREAFTER BE INCORPORATED IN THESE PLANS. THE CONSTRUCTION CONTRACTOR SHALL PREPARE OR OBTAIN THE APPROPRIATE SAFETY SYSTEMS, INCLUDING THE PLANS AND SPECIFICATIONS REQUIRED BY THE HOUSE BILLS 662 AND 665 ENACTED BY THE TEXAS LEGISLATURE IN THE 70TH LEGISLATURE - REGULAR SESSION.
2. CONTRACTOR SHALL VERIFY LOCATIONS AND ELEVATIONS PRIOR TO CONSTRUCTION OF PROPOSED FACILITIES.
3. CONTRACTOR'S ACCESS TO THE SITE AND LAYDOWN AREA DESIGNATIONS WILL BE DEFINED AT A FUTURE DATE PRIOR TO CONSTRUCTION. CONTRACTOR ACCESS SHALL REMAIN OPEN TO TRAFFIC FOR THE DURATION OF THE PROJECT, AND ANY DAMAGES CAUSED BY THE CONTRACTOR TO THE ACCESS SHALL BE REPAIRED PRIOR TO COMPLETION OF THE PROJECT.
4. CONTRACTOR TO OBTAIN ALL REQUIRED CONSTRUCTION PERMITS AT HIS EXPENSE PRIOR TO COMMENCEMENT OF WORK.
5. CONTRACTOR STAGING AREA TO BE USED FOR CONTRACTOR'S PERSONNEL, PARKING, MATERIAL, STORAGE, MATERIAL FABRICATION, AND RELATED CONSTRUCTION USES. CONTRACTOR STAGING AREA IS PROVIDED TO CONTRACTOR IN "AS IS" CONDITION. IMPROVEMENTS OR MODIFICATIONS TO BE MADE AT CONTRACTOR'S EXPENSE AND ARE SUBJECT TO OWNER'S APPROVAL. PRIOR TO COMPLETION OF WORK, ALL MATERIALS TO BE REMOVED FROM STAGING AREA AND AREA LEFT CLEAN AND RESTORED TO ORIGINAL CONDITION INCLUDING RESODDING IF REQUIRED.
6. USE THE MANUFACTURER'S CERTIFIED DRAWINGS AND SPECIFICATIONS FOR THE EQUIPMENT ANCHORAGE AND INSTALLATION DETAILS IF AVAILABLE. OTHERWISE, USE ANCHORAGE DRAWINGS AND SPECIFICATIONS CONTAINED HEREIN.
7. PROVIDE EQUIPMENT SLABS FOR EQUIPMENT PER THESE DRAWINGS AND SPECIFICATIONS ONLY.
8. PROVIDE ALL PROJECT COMPONENTS TO SUPPORT, FASTEN, CONNECT AND COMPLETE THE WORK. ALL PROJECT COMPONENTS ARE NOT INDICATED ON DRAWINGS.
9. CONTRACTOR SHALL PROVIDE 72 HOUR WRITTEN NOTICE TO OWNER'S REPRESENTATIVE WHENEVER IT BECOMES NECESSARY FOR THE OWNER TO OPERATE VALVES, PLANT APPURTENANCES OR PLANT EQUIPMENT.
10. CONSTRUCTION METHODS, PROCEDURES, AND SEQUENCES ARE THE CONTRACTOR'S RESPONSIBILITY. CONSTRUCTION SEQUENCE SHALL CONFORM TO SCHEDULE RESTRICTIONS IN THE CONSTRUCTION SCHEDULE PROVIDED. THE CONTRACTOR SHALL TAKE ALL NECESSARY MEANS TO MAINTAIN AND PROTECT THE STRUCTURAL AND OPERATIONAL INTEGRITY OF THE FACILITY DURING ALL STAGES OF CONSTRUCTION.
11. IF REQUIRED, CONTRACTOR SHALL PROVIDE TEMPORARY ELECTRIC POWER AT OWN EXPENSE FOR REQUIRED EQUIPMENT. CONTACT MR. WAYNE WATTS, CENTER POINT ENERGY POWER CONSULTANT, 713-207-3626 FOR PRICE AND AVAILABILITY OF TEMPORARY ELECTRIC POWER PRIOR TO BID.
12. THE LOCATION OF EXISTING UNDERGROUND UTILITIES IS SHOWN IN AN APPROXIMATE WAY ONLY. THE CONTRACTOR SHALL DETERMINE THE EXACT LOCATION OF ALL EXISTING UTILITIES BEFORE COMMENCING WORK. THE CONTRACTOR SHALL PAY FOR AND REPAIR ALL DAMAGES CAUSED BY FAILURE TO EXACTLY LOCATE AND PRESERVE ANY AND ALL UNDERGROUND UTILITIES UNLESS OTHERWISE INDICATED.

SITE WORK NOTES

1. CONTRACTOR TO KEEP MAIN ACCESS ROADS OPEN TO TRAFFIC AT ALL TIMES. CONTRACTOR STAGING AREA USED FOR CONTRACTOR'S PERSONNEL, PARKING, MATERIAL, STORAGE, STOCKPILE, MATERIAL FABRICATION, AND RELATED CONSTRUCTION USES WILL NOT BE ALLOWED TO INTERFERE WITH NORMAL FLOW OF TRAFFIC.
2. COORDINATE ALL PLANT TRAFFIC INTERRUPTIONS INCLUDING ALL STREET CLOSINGS WITH CITY ENGINEER.
3. MAINTAIN DRAINAGE OF SITE DURING ALL PHASES OF CONSTRUCTION. DO NOT BLOCK DRAINAGE FROM ADJACENT AREAS OR ADD FLOW TO ADJACENT AREAS.
4. CONTRACTOR SHALL LIMIT CONSTRUCTION ACTIVITIES TO AVOID CREATION OF EXCESSIVE NOISE OR DUST.
5. CONTRACTOR SHALL PROVIDE ALL NECESSARY SAFETY BARRICADES, LIGHTS, AND FENCE TO PROTECT WORKMEN AND OTHERS AT ALL TIMES. PROVIDE SIGNS WHERE NECESSARY TO IDENTIFY HAZARDS OR OTHER SAFETY ALERTS. SEE GENERAL CONSTRUCTION NOTES.
6. CONTRACTOR SHALL MAINTAIN THE WORK SITE IN A NEAT AND CLEAN MANNER AT ALL TIMES.
7. RESOD OR RESEED ALL DISTURBED AREAS IN ACCORDANCE WITH CITY OF HOUSTON STANDARD SPECIFICATION 02921 AND 02922.

LIGHTING REQUIREMENTS FOR ENERGY CODE COMPLIANCE

1. RECESSED LIGHTING FIXTURES (§502.1.3): RECESSED LIGHTING FIXTURES SHALL BE TYPE IC RATED, MANUFACTURED WITH NO PENETRATIONS BETWEEN THE INSIDE OF THE RECESSED FIXTURE AND CEILING CAVITY AND SEALED TO PREVENT AIR LEAKAGE, OR SHALL BE OF NOT LESS THAN 1" FROM INSTALLED IN A SEALED BOX MAINTAINING THE REQUIRED CLEARANCES COMBUSTIBLE MATERIAL AND NOT LESS THAN 3" FROM INSULATION MATERIAL.
2. CAULKING AND SEALANTS (§502.1.4.2). EXTERIOR JOINTS, SEAMS OR PENETRATIONS IN THE BUILDING ENVELOPE THAT ARE SOURCES OF AIR LEAKAGE, SHALL BE SEALED WITH DURABLE CAULKING MATERIALS, CLOSED GASKETING SYSTEMS, TAPED OR COVERED WITH MOISTURE VAPOR PERMEABLE HOUSE WRAP, THIS INCLUDES SEALING AROUND RECESSED LIGHTS AND ALL ELECTRICAL PENETRATIONS.
3. INTERIOR LIGHTING CONTROLS (§805.2.1). EXCEPT FOR THOSE AREAS LIGHTED FOR SECURITY, EMERGENCY, OR AS A PATH FOR MEANS OF EGRESS, EACH AREA ENCLOSED BY WALLS OR FLOOR TO CEILING PARTITIONS SHALL HAVE AT LEAST ONE MANUAL CONTROL FOR THE LIGHTING SERVING THAT AREA.
4. BI-LEVEL SWITCHING (§805.2.1.1). EACH AREA THAT IS REQUIRED TO HAVE A MANUAL CONTROL SHALL ALSO ALLOW THE OCCUPANT TO REDUCE THE CONNECTED LIGHTING LOAD IN A REASONABLY UNIFORM ILLUMINATION PATTERN AT LEAST 50 PERCENT, EXCEPT IN AREAS WITH ONE 1 LUMINARY, CONTROLLED, BY AN OCCUPANT SENSING DEVICE, CORRIDORS, STOREROOMS, REST ROOMS, OR PUBLIC LOBBIES OR IN GUEST ROOMS.
5. EXTERIOR LIGHTING CONTROLS. AUTOMATIC SWITCHING OR PHOTOCELL CONTROLS SHALL BE PROVIDED FOR ALL EXTERIOR LIGHTING NOT INTENDED FOR 24 HOUR OPERATION. AUTOMATIC TIME SWITCHES SHALL HAVE A COMBINATION SEVEN-DAY AND SEASONAL DAYLIGHT PROGRAM SCHEDULE ADJUSTMENT, AND A MINIMUM FOUR (4) HOUR POWER BACKUP.

GENERAL NOTES - MOUNTING HARDWARE AND EQUIPMENT

1. ALL EQUIPMENT SHALL BE INSTALLED USING MANUFACTURER'S STANDARD MOUNTING HARDWARE, INCLUDING PEDESTALS FOR SECURITY EQUIPMENT. IF SUCH EQUIPMENT IS NOT AVAILABLE OR IS UNSUITABLE FOR THE APPLICATION, FIELD FABRICATED EQUIPMENT IS AUTHORIZED AS LONG AS A SUITABLE SUBMITTAL DETAILING THE FABRICATION IS MADE AND APPROVED BEFORE ANY WORK IS CARRIED OUT. ALL EQUIPMENT SPECIFIED IN THESE DRAWINGS IS CONSIDERED TO BE COMPLETE IN ALL MOUNTING AND INSTALLATION HARDWARE, AND NO ADDITIONAL CHARGES SHALL BE MADE DUE TO INSUFFICIENT HARDWARE FOR MOUNTING OR INSTALLATION.

No.	Date	Revisions	App.

STATE OF TEXAS
LARRY M. BARFIELD
39337
REGISTERED
PROFESSIONAL ENGINEER
9-21-11

Binkley & Barfield, Inc
consulting engineers
Texas Registration Number F-257
1710 Seamist Drive
Houston, Texas 77008-3189
(713) 869-3433

SURVEYED BY: AMANI ENG. | FIELD BOOK NO. : P-5486

CITY OF HOUSTON
DEPARTMENT OF PUBLIC WORKS AND ENGINEERING

ALMEDA SIMS WWTP & SPF IMPROVEMENTS PACKAGE II

ELECTRICAL NOTES GENERAL

FILE NO:	-
WBS: R-000298-0005-4	
DRAWING SCALE	NTS
CITY OF HOUSTON PM	IRAJ RANJBAR, P.E.
DWG NO. :	E-003
SHEET NO.	89 OF 147

PUBLIC WORKS AND ENGINEERING
ACCEPTED & FILED
49061
CITY DRAWING NUMBER
HOUSTON, TEXAS

DUCTBANK SECTION A - A (EXISTING)

3C-P09,P12	3C-P27	3C-C01 *
3C-P06	3C-P07	3C-P08
3C-P16, P-17, P-18	3C-P19, P28, P29	3C-P30, P31, P32, P33
3C-P13	3C-P14	3C-P15

DUCTBANK SECTION B - B (EXISTING)

SPARE	**3C-P27**	**3C-C01 ***
3C-P06	**3C-P07**	**3C-P08**
3C-P09	3C-C07 **	3C-P30, P33 120 V UPS (P32)
3C-P13	3C-P14	3C-P15

** THICKENER #2 HARD WIRE CONTROL CIRCUITS TO CP 700 PER INSTRUMENTATION DRAWINGS.

DUCTBANK SECTION C - C (EXISTING)

SPARE	**3C-P27**	**3C-C01 ***
3C-P06	**3C-P07**	**3C-P08**

* CONSULT INSTRUMENTATION DRAWINGS FOR PROFIBUS CABLING REQUIREMENTS BETWEEN CP 3C, CP 700, CP 710 & CP TWAS

* DUCTBANK SECTION D - D (EXISTING)

SPARE	3C-P30, P33 ***
3C-C07 **	3C-P18

** THICKENER #2 HARD WIRE CONTROL CIRCUITS TO CP 700 PER INST DWGS

*** 120 VOLT UTILITY OUTLET AND STANCHION LIGHT CIRCUITS.

DUCTBANK SECTION E - E (EXISTING)

SPARE	**3C-P30, P33 ***
THICKENER #1 CONTROL WIRES **	**THICKENER #1 POWER (3C-P09)**

** THICKENER #1 HARD WIRE CONTROL CIRCUITS TO CP 700 PER INST DWGS

DUCTBANK SECTION E - E WIRING TO BE INSTALLED IN PACKAGE II

DUCTBANK SECTION E - E WIRING TO BE INSTALLED IN PACKAGE II

*** 120 VOLT UTILITY OUTLET AND STANCHION LIGHT CIRCUITS.

DUCTBANK SECTION F - F (EXISTING)

SPARE	**3C-P27**

CIRCUITS IN BOLD FONT AND WITH BOLD BORDERS ARE TO BE EXTENDED AND/OR INSTALLED IN THIS PROJECT. VERIFY ALL CIRCUITING DETAILS WITH CONDUIT AND CABLE SCHEDULES.

GENERAL NOTES:

1. PROPOSED CONDUIT AND DUCTBANK ROUTING IS SCHEMATIC IN NATURE. THE CONTRACTOR SHALL ADJUST THE ROUTING TO AVOID UNDERGROUND UTILITIES.
2. UNLESS OTHERWISE NOTED ABOVE GRADE CONDUITS SHALL BE PLASTIC COATED RGS. BELOW GRADE CONDUITS SHALL BE SCHEDULE 40 PVC.
3. CONTRACTOR SHALL DOCUMENT THE LOCATION OF ALL UNDERGROUND CONDUITS AND DUCTBANKS, BOTH 'AS FOUND' AND NEW, ON RED LINE MARKUP DRAWINGS SO THAT THEY CAN BE ACCURATELY SHOWN ON 'AS-BUILT' RECORD DRAWINGS.
4. SEE INSTRUMENTATION DRAWINGS FOR PROFIBUS AND CONTROL SYSTEM DETAILS.
5. [P] DESIGNATES POWER HAND HOLE
6. [S] DESIGNATES SCADA/INSTRUMENTATION HAND HOLE
7. THE DUCT BANKS AND HAND HOLES WERE INSTALLED IN PACKAGE I. CONDUITS AND CIRCUITS ARE TO BE EXTENDED AND/OR INSTALLED IN PACKAGE II AS NOTED.

KEYED NOTES:

1. PROPOSED REPLACEMENT BRIDGE STRUCTURE
2. PROPOSED ROTARY SCREENING MECHANISM #3. SEE SHEETS E-107 AND E-108.
3. EXISTING 'OLD' SCREENING FACILITY TO BE DEMOLISHED IN THIS PROJECT.
4. CONDUITS PROVIDED IN PACKAGE I. INSTALL NEMA 4X STAINLESS STEEL JUNCTION BOX OR CONDUIT BODIES AND CONTINUE CONDUIT RUNS AS INDICATED.
5. EXISTING CP TWAS CONTROL CABINET
6. CONDUITS PROVIDED IN PACKAGE I. INSTALL CONDUIT BODIES AS NEEDED TO CONTINUE POWER CONDUITS TO MOTOR DISCONNECT SWITCHES AND CONTROL CONDUIT TO CP TWAS CONTROL CABINET.
7. EXISTING METAL CLAD BUILDING TO REMAIN.
8. CONDUITS PROVIDED IN PACKAGE I. INSTALL CONDUIT BODIES AS NEEDED TO CONTINUE POWER CONDUIT TO DRY TRANSFORMER IN METAL CLAD BUILDING.
9. ROUTE LIGHTING AND 120 VOLT OUTLET CIRCUITS TO POWER HANDHOLE #2. SPLICE INTO EXISTING CIRCUITS USING SCOTCH CAST SPLICE KITS.

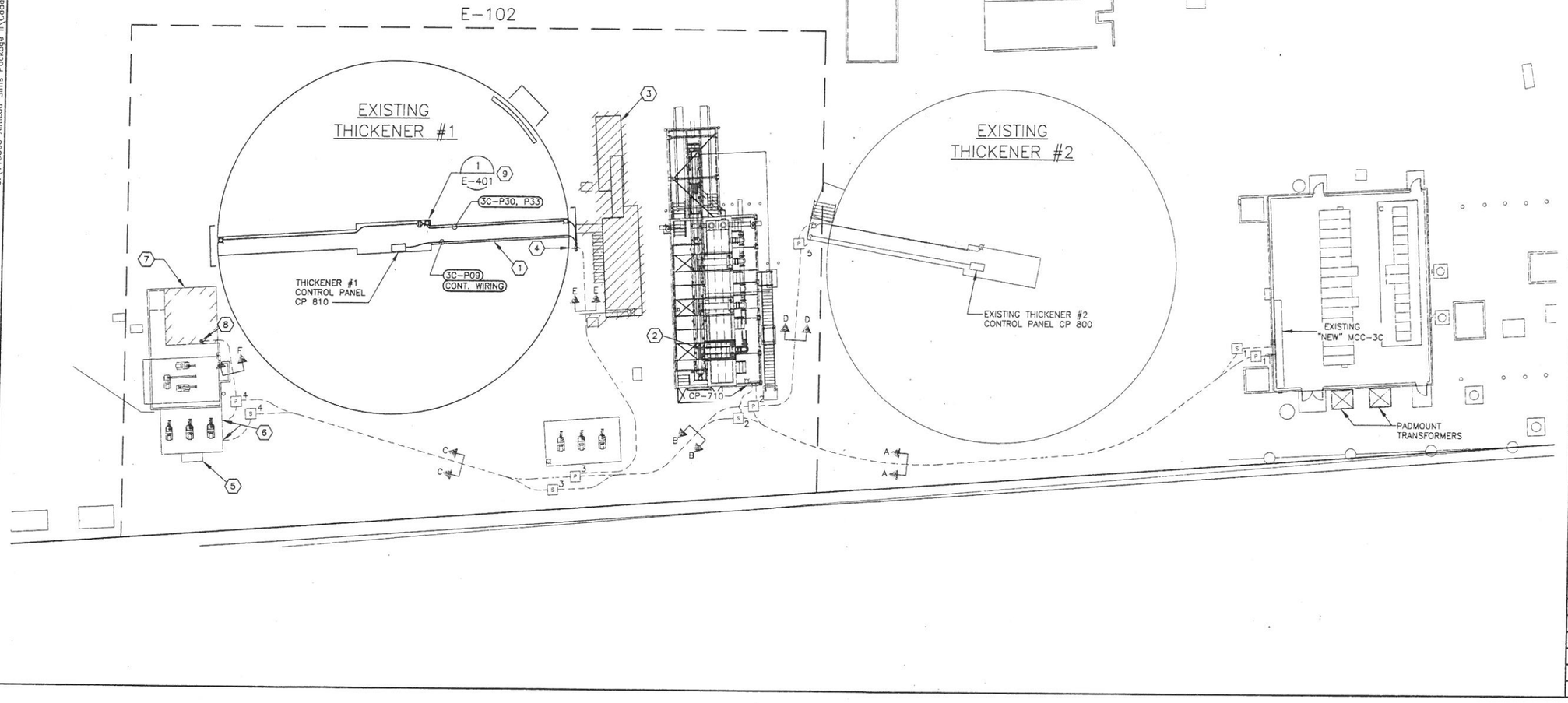

No.	Date	Revisions	App.

STATE OF TEXAS — LARRY M. BARFIELD — 39337 — REGISTERED PROFESSIONAL ENGINEER

Binkley & Barfield, Inc
consulting engineers
Texas Registration Number F-257
1710 Seamist Drive
Houston, Texas 77008-3189
(713) 869-3433

SURVEYED BY: AMANI ENG. | FIELD BOOK NO. : P-5486

CITY OF HOUSTON
DEPARTMENT OF PUBLIC WORKS AND ENGINEERING

ALMEDA SIMS WWTP & SPF IMPROVEMENTS PACKAGE II

ELECTRICAL SITE PLAN THICKENER & SCREENING FACILITY AREA

FILE NO:	-
WBS: R-000298-0005-4	
DRAWING SCALE	
1/16" = 1'-0"	
CITY OF HOUSTON PM	
IRAJ RANJBAR, P.E.	
DWG NO. :	E-100
SHEET NO.	90 OF 147

PUBLIC WORKS AND ENGINEERING — ACCEPTED & FILED — 49061 CITY DRAWING NUMBER — HOUSTON, TEXAS

G:\115805 Almeda Sims Package II\Cadd Dwgs_E-100 Thickener Area Enlarged Site Plan.dwg Jan 10,2012 - 12:36pm rpd

COLOR TABLE:

ORIGINAL SCALE IN INCHES FOR REDUCED PLANS
0 1 2 3

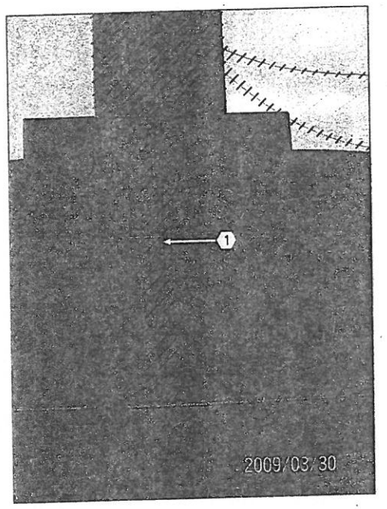

THICKENER #1 WEST ELEVATION (1 / E-101)

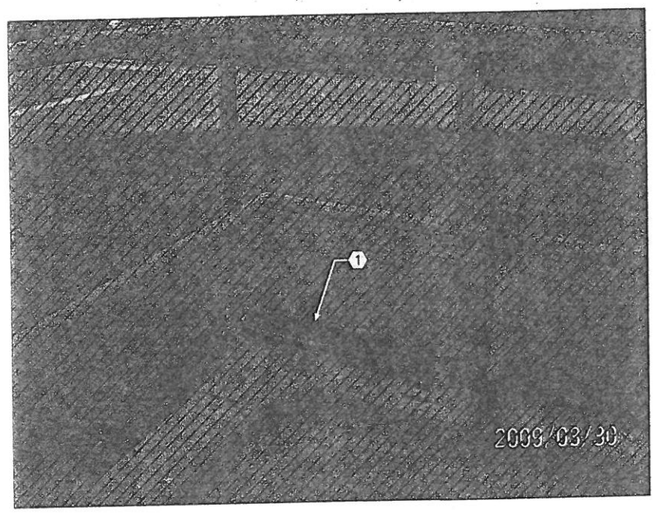

THICKENER #1 CONDUIT ROUTING 1 OF 4 (2 / E-101)

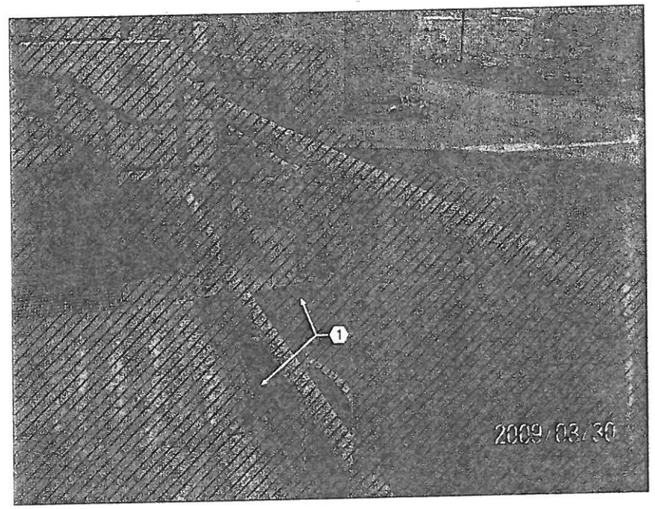

THICKENER #1 CONDUIT ROUTING 2 OF 4 (3 / E-101)

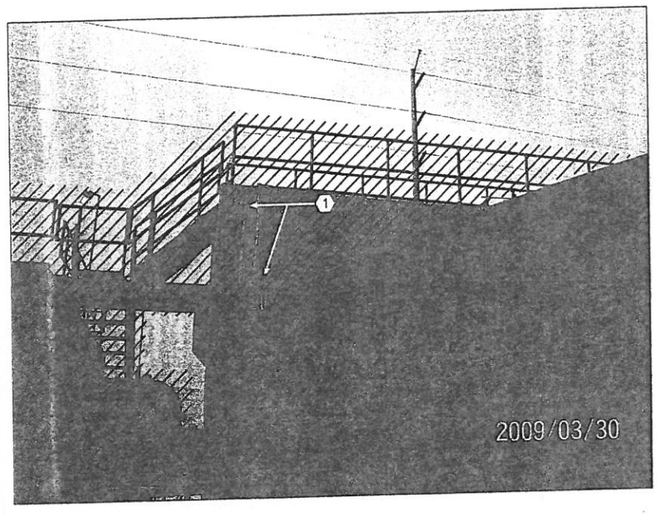

THICKENER #1 CONDUIT ROUTING 3 OF 4 (4 / E-101)

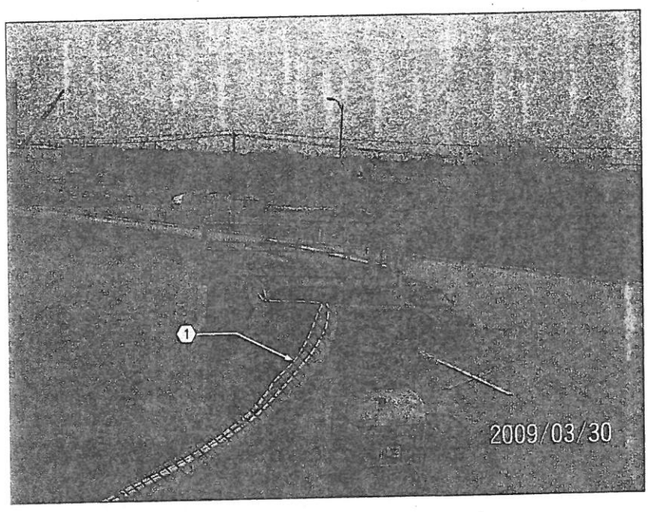

THICKENER #1 CONDUIT ROUTING 4 OF 4 (5 / E-101)

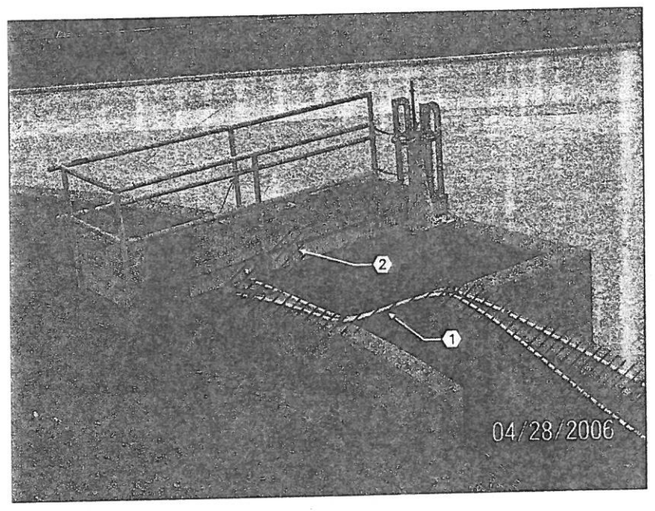

THICKENER #1
EFFLUENT FLOW METER PROBE (6 / E-101)

GENERAL NOTES:

1. THICKENER # 1 BRIDGE IS TO BE DEMOLISHED AND REPLACED.
2. REMOVE ALL ELECTRICAL CONTROLS AND EQUIPMENT TO FACILITATE DEMOLITION.
3. REMOVE ALL ELECTRICAL WIRING BACK TO POINT OF ORIGIN.

KEYED NOTES:

(1) REMOVE ALL CONDUITS, JUNCTION BOXES, FITTINGS AND MOUNTING HARDWARE FROM THICKENER # 1 STRUCTURE.

(2) REMOVE FLOW METER PROBE, TRANSDUCER AND MOUNTING HARDWARE.

No.	Date	Revisions	App.

STATE OF TEXAS
LARRY M. BARFIELD
39337
REGISTERED
PROFESSIONAL ENGINEER
9-21-11

Binkley & Barfield, Inc
consulting engineers
Texas Registration Number F-257
1710 Seamist Drive
Houston, Texas 77008-3189
(713) 869-3433

SURVEYED BY: AMANI ENG. | FIELD BOOK NO. : P-5486

CITY OF HOUSTON
DEPARTMENT OF PUBLIC WORKS AND ENGINEERING

ALMEDA SIMS WWTP & SPF
IMPROVEMENTS PACKAGE II

THICKENER #1
ELECTRICAL DEMOLITION PLAN

FILE NO:	
WBS: R-000298-0005-4	
DRAWING SCALE	NO SCALE
CITY OF HOUSTON PM	IRAJ RANJBAR, P.E.
DWG NO. :	E-101
SHEET NO.	91 OF 147

PUBLIC WORKS AND ENGINEERING
ACCEPTED & FILED
49061
CITY DRAWING NUMBER
HOUSTON, TEXAS

G:\115805 Almeda Sims Package II\Cadd Dwgs_E-101 Thickener #1 Elec Demo Plan.dwg Sep 20,2011 - 4:15pm RPD
COLOR TABLE:
ORIGINAL SCALE IN INCHES
FOR REDUCED PLANS
0 1 2 3

KEYED NOTES:

1. PROPOSED REPLACEMENT BRIDGE STRUCTURE.
2. PROPOSED THICKENER #1 CONTROL PANEL CP 810. FIELD LOCATE FOR PROPER NEC WORKING CLEARANCES. PROVIDE HARD WIRED 'E' STOP FROM OVER TORQUE LIMIT SWITCH TO MCC-3C.
3. EXISTING 'OLD' SCREENING FACILITY TO BE DEMOLISHED.
4. CONDUITS PROVIDED IN PACKAGE I. INSTALL NEMA 4X STAINLESS STEEL JUNCTION BOX OR CONDUIT BODIES AND CONTINUE CONDUIT RUNS AS INDICATED.
5. EXISTING CP TWAS CONTROL CABINET
6. CONDUITS PROVIDED IN PACKAGE I. INSTALL CONDUIT BODIES AS NEEDED TO CONTINUE POWER CIRCUITS TO MOTOR DISCONNECT SWITCHES AND CONTROL CIRCUITS TO CP TWAS CONTROL CABINET.
7. EXISTING METAL CLAD BUILDING TO REMAIN.
8. CONDUITS PROVIDED IN PACKAGE I. INSTALL CONDUIT BODIES AS NEEDED TO CONTINUE POWER CONDUIT TO DRY TRANSFORMER IN METAL CLAD BUILDING. SEE SHEET E-109.
9. ROUTE LIGHTING AND 120 VOLT OUTLET CIRCUITS TO POWER HAND HOLE #2. SPLICE INTO EXISTING CIRCUITS USING SCOTCH CAST SPLICE KITS.
10. OLD SCREENING FACILITY ELECTRICAL HAND HOLES TO BE DEMOLISHED IN CONJUNCTION WITH AREA PAVING.
11. PROPOSED ROTARY SCREENING MECHANISM #3. SEE SHEETS E-107 & E-108

GENERAL NOTES:

1. PROPOSED CONDUIT AND DUCTBANK ROUTING IS SCHEMATIC IN NATURE. THE CONTRACTOR SHALL ADJUST THE ROUTING TO AVOID UNDERGROUND UTILITIES.
2. UNLESS OTHERWISE NOTED ABOVE GRADE CONDUITS SHALL BE PLASTIC COATED RGS. BELOW GRADE CONDUITS SHALL BE SCHEDULE 40 PVC.
3. CONTRACTOR SHALL DOCUMENT THE LOCATION OF ALL UNDERGROUND CONDUITS AND DUCTBANKS, BOTH 'AS FOUND' AND NEW, ON RED LINE MARKUP DRAWINGS SO THAT THEY CAN BE ACCURATELY SHOWN ON 'AS-BUILT' RECORD DRAWINGS.
4. SEE INSTRUMENTATION DRAWINGS FOR PROFIBUS AND CONTROL SYSTEM DETAILS.
5. P DESIGNATES POWER HAND HOLE
6. S DESIGNATES SCADA/INSTRUMENTATION HAND HOLE

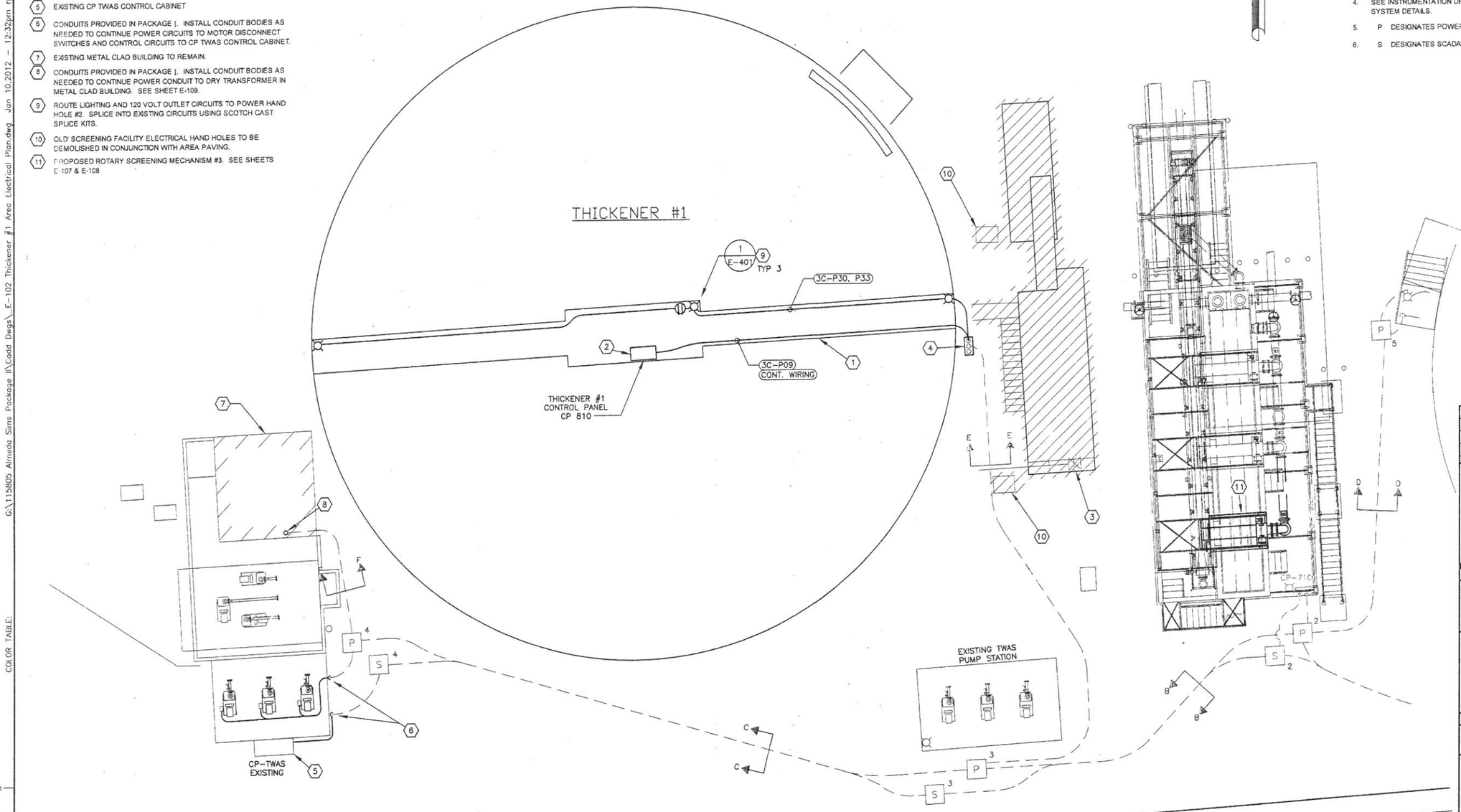

No.	Date	Revisions	App.

STATE OF TEXAS
LARRY M. BARFIELD
39337
REGISTERED
PROFESSIONAL ENGINEER

Binkley & Barfield, Inc
consulting engineers
Texas Registration Number F-257
1710 Seamist Drive
Houston, Texas 77008-3189
(713) 869-3433

SURVEYED BY: AMANI ENG. | FIELD BOOK NO. : P-5486

CITY OF HOUSTON
DEPARTMENT OF PUBLIC WORKS AND ENGINEERING

ALMEDA SIMS WWTP & SPF IMPROVEMENTS PACKAGE II

THICKENER #1 AREA ELECTRICAL PLAN

FILE NO:	–
WBS: R-000298-0005-4	
DRAWING SCALE	
1/16" = 1'-0"	
CITY OF HOUSTON PM	
IRAJ RANJBAR, P.E.	
DWG NO. :	E-102
SHEET NO.	92 OF 147

PUBLIC WORKS AND ENGINEERING
ACCEPTED & FILED
49061
CITY DRAWING NUMBER
HOUSTON, TEXAS

G:\115605 Almeda Sims Package II\Cadd Dwgs_E-102 Thickener #1 Area Electrical Plan.dwg Jan 10,2012 - 12:32pm rpd

COLOR TABLE:

ORIGINAL SCALE IN INCHES
FOR REDUCED PLANS
0 1 2 3

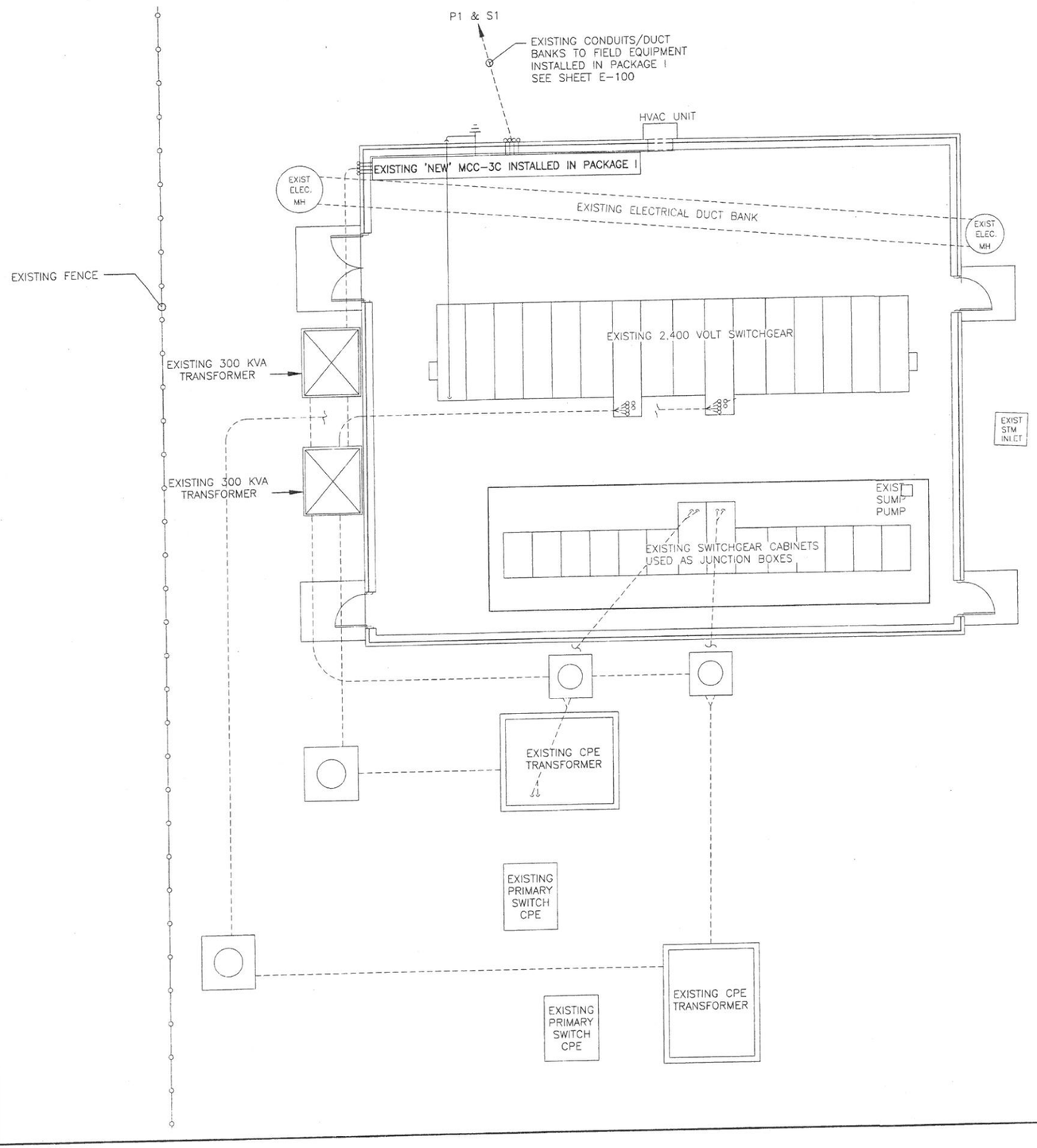

GENERAL NOTES:

1. EXISTING 'NEW' MCC-3C WAS INSTALLED IN PACKAGE I.
2. SHIFT DESIGNATED CIRCUITS FROM 'OLD' MCC-3C TO 'NEW' MCC-3C. SEE SHEETS E-104, E-105 & E-106.
3. INSTALL WIRING FROM 'NEW' MCC-3C TO NEW EQUIPMENT. SEE SHEETS E-104, E-105 & E-106.

No.	Date	Revisions	App.

STATE OF TEXAS
LARRY M. BARFIELD
39337
REGISTERED
PROFESSIONAL ENGINEER
9-21-11

Binkley & Barfield, Inc
consulting engineers
Texas Registration Number F-257
1710 Seamist Drive
Houston, Texas 77008-3189
(713) 869-3433

SURVEYED BY: AMANI ENG. | FIELD BOOK NO. : P-5486

CITY OF HOUSTON
DEPARTMENT OF PUBLIC WORKS AND ENGINEERING

ALMEDA SIMS WWTP & SPF IMPROVEMENTS PACKAGE II

MCC-3C LOCATION
2.4KV SWITCHGEAR BLDG

FILE NO:	-
WBS: R-000298-0005-4	
DRAWING SCALE	3/16" = 1'-0"
CITY OF HOUSTON PM	IRAJ RANJBAR, P.E.
DWG NO. :	E-103
SHEET NO.	93 OF 147

PUBLIC WORKS AND ENGINEERING
ACCEPTED & FILED
49061
CITY DRAWING NUMBER
HOUSTON, TEXAS

G:\115805 Almeda Sims Package II\Cadd Dwgs\E-103 MCC-3C Location.dwg Sep 20,2011 - 4:37pm RPD

COLOR TABLE:

ORIGINAL SCALE IN INCHES FOR REDUCED PLANS
0 1 2 3

G:\115805 Almeda Sims Package II\Cadd Dwgs\E-104 MCC-3C Elevation.dwg Sep 20,2011 - 4:51pm RPD

MCC-3C (EXISTING)

LOCATED IN 2.4KV SWITCHGEAR BUILDING

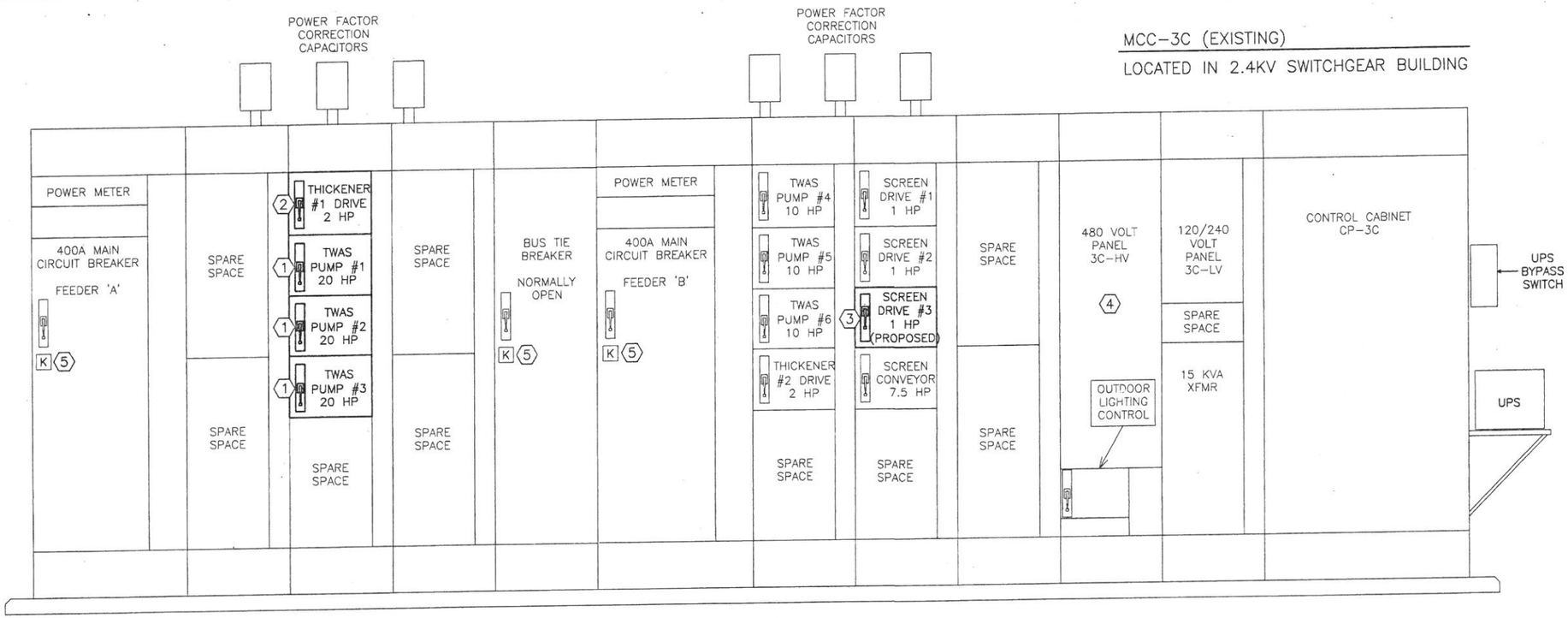

PANEL '3C-LV' - PANEL SCHEDULE (EXISTING)

120/240 VOLT, 1 PHASE, 3 WIRE, 80 AMP MAIN CIRCUIT BREAKER, 25 KA RMS SYM,

NEMA 1 CIRCUIT BREAKER PANEL WITH NEUTRAL AND GROUND BARS. INSTALLED IN MCC-3C

DESCRIPTION	LOAD VA	WIRE DATA or TAG #	BKR. SIZE	CKT. NO.	PHASE AMPS A Ø	PHASE AMPS B Ø	CKT. NO.	BKR. SIZE	WIRE DATA or TAG #	LOAD VA	DESCRIPTION
OUTSIDE LIGHTS MOUNTED ON BUILDING	1,500	2 x #12 #12 GND	15 A 2 POLE	1	10.4 / 6.3		2	15 A 1 POLE	2 x #12 #12 GND	1,250	INSIDE LIGHTS
				3		10.4 / 6.3	4	15 A 1 POLE	2 x #12 #12 GND	1,250	INSIDE LIGHTS
EMERGENCY LIGHTING	48	2 x #12 #12 GND	15 A 1 POLE	5	9.0 / 0.4		6	20 A 1 POLE	2 x #12 #12 GND	1,080	RECEPTACLES
EXIT LIGHTS	48	2 x #12 #12 GND	15 A 1 POLE	7		9.8 / 0.4	8	20 A 1 POLE	2 x #12 #12 GND	1,176	SUMP PUMP 1/2 HP
CONTROL PANEL 3C-CP UPS	1,500	2 x #12 #12 GND	20 A 1 POLE	9	12.5 / 12.5		10	20 A 1 POLE	2 x #8, #8 GND	1,500	LIGHT STANCHION RECEPTACLES 3C-P30
NON UPS PWR TO FIELD CONT PANELS	1,500	3C-P32	20 A 1 POLE	11		0.0 / 12.5	12				
				13			14				
				15			16				
				17			18				
				19			20				
				21			22				
				23			24				
				25			26				
				27			28				
				29			30				

51.1	39.4	TOTAL CONNECTED LOAD
55.4	57.0	TOTAL NEC LOAD

PANEL '3C-HV' - PANEL SCHEDULE (EXISTING)

480/277 VOLT, 3 PHASE, 4 WIRE, 200 AMP MAIN CIRCUIT BREAKER, 42 KA RMS SYM,

NEMA 1 CIRCUIT BREAKER PANEL WITH NEUTRAL AND GROUND BARS. INSTALLED IN MCC-3C

DESCRIPTION	LOAD VA	WIRE DATA or TAG #	BKR. SIZE	CKT. NO.	PHASE AMPS A Ø	PHASE AMPS B Ø	PHASE AMPS C Ø	CKT. NO.	BKR. SIZE	WIRE DATA or TAG #	LOAD VA	DESCRIPTION
					A Ø	B Ø	C Ø					
AIR CONDITIONER (SWITCHGEAR BLDG)	19,944	3 x #10 #10 GND	30 A* 3 POLE HACR	1	15.6 / 24.0			2	40 A 2 POLE	3C-P27		15KVA DRY TRANSFORMER (EXISTING MCC-3C BLDG)
				3		15.6 / 24.0		4				
				5			5.7 / 24.0	6	20 A 1 POLE	3 x #12, #12 NEUTRAL	1,575	LIGHTING CONTACTOR
MOV FV 711 (SCREENING STRUCTURE)	2,493	3 x #10, #10 GND 3C-P28	15 A 3 POLE	7	0.0 / 3.0			8	20 A 1 POLE			LIGHTING CONTACTOR
				9		0.0 / 3.0		10	20 A 1 POLE			LIGHTING CONTACTOR
				11			0.0 / 3.0	12				
MOV FV 721 (SCREENING STRUCTURE)	2,493	3 x #10, #10 GND 3C-P29	15 A 3 POLE	13	0.0 / 3.0			14				
				15		0.0 / 3.0		16				
				17			0.0 / 3.0	18				
MOV FV 731 (SCREENING STRUCTURE) ADD IN PACKAGE II	2,493	3 x #10, #10 GND 3C-P35	15 A 3 POLE	19	0.0 / 3.0			20				
				21		0.0 / 3.0		22				
				23			0.0 / 3.0	24				
				25				26				
				27				28				
				29				30				

* COORDINATE CIRCUIT BREAKER SIZE WITH MANUFACTURER'S NAMEPLATE DATA

48.6	48.6	38.7	TOTAL CONNECTED LOAD
54.6	54.6	44.1	TOTAL NEC LOAD

GENERAL NOTES:

1. SPARE SPACES IN MCC ARE EQUIPPED WITH VERTICAL BUSING FOR FUTURE USE.
2. MCC BUCKETS WITH STARTERS AND CONTROL DEVICES AND POWER FACTOR CORRECTION CAPACITORS FOR THE 6 TWAS PUMPS WERE PROVIDED IN PACKAGE I.

KEYED NOTES:

(1) DISCONNECT TWAS PUMPS 1, 2 & 3 FROM OLD MCC-3C AND RE-FEED FROM THIS MCC.

(2) PROVIDE FEEDER CIRCUIT TO THICKENER #1 REPLACEMENT DRIVE.

(3) PROVIDE FEEDER AND CONTROL CIRCUITRY TO PROPOSED SCREEN DRIVE #3.

(4) PROVIDE NEW FEEDER CIRCUIT FROM BREAKER PANEL '3C-HV', SLOTS 2 & 4 TO 15 KVA TRANSFORMER IN 'OLD' MCC-3C BUILDING. SEE SHEET E-109, DETAIL 5

(5) KIRK KEY INTERLOCK

No.	Date	Revisions	App.

STATE OF TEXAS — LARRY M. BARFIELD — 39337 — REGISTERED PROFESSIONAL ENGINEER — 9-21-11

Binkley & Barfield, Inc
consulting engineers
Texas Registration Number F-257
1710 Seamist Drive
Houston, Texas 77008-3189
(713) 869-3433

SURVEYED BY: AMANI ENG. | FIELD BOOK NO. : P-5486

CITY OF HOUSTON
DEPARTMENT OF PUBLIC WORKS AND ENGINEERING

ALMEDA SIMS WWTP & SPF IMPROVEMENTS PACKAGE II

MCC-3C ELEVATION & PANEL SCHEDULES

FILE NO:	-
WBS: R-000298-0005-4	
DRAWING SCALE	NO SCALE
CITY OF HOUSTON PM	IRAJ RANJBAR, P.E.
DWG NO. :	E-104
SHEET NO.	94 OF 147

PUBLIC WORKS AND ENGINEERING — ACCEPTED & FILED — 49061 CITY DRAWING NUMBER — HOUSTON, TEXAS

COLOR TABLE: 3 2 1 0

ORIGINAL SCALE IN INCHES FOR REDUCED PLANS

G:\115805 Almeda Sims Package II\Cadd Dwgs\E-105 MCC-3C One Line Dia 1 of 2.dwg Sep 20,2011 - 4:57pm RPD

COLOR TABLE:

ORIGINAL SCALE IN INCHES
FOR REDUCED PLANS
0 1 2 3

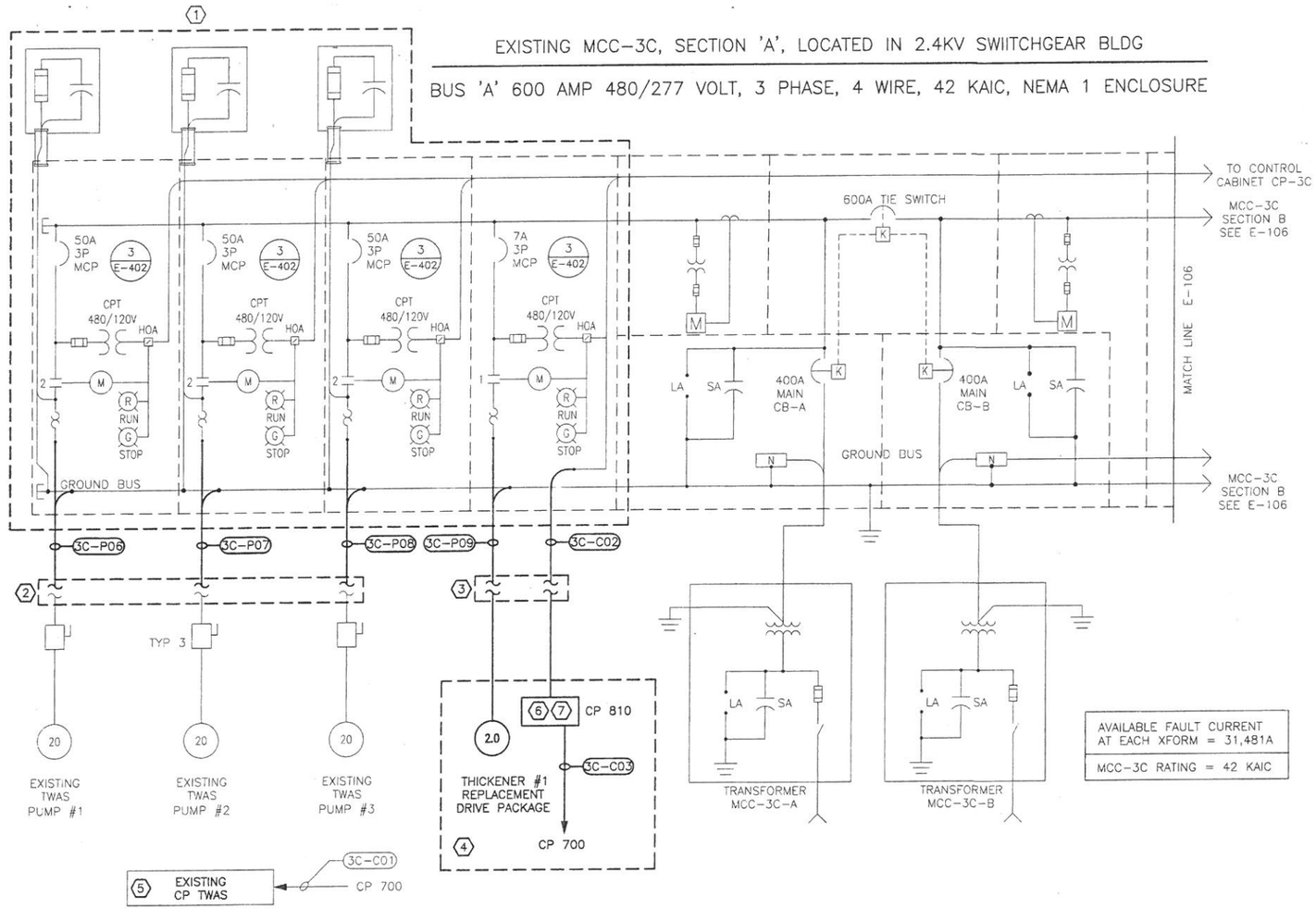

AVAILABLE FAULT CURRENT AT EACH XFORM = 31,481A
MCC-3C RATING = 42 KAIC

GENERAL NOTES:

1. SPARE SPACES IN MCC ARE EQUIPPED WITH VERTICAL BUSING FOR FUTURE USE.

KEYED NOTES:

(1) MCC BUCKETS WITH STARTERS AND CONTROL DEVICES AND POWER FACTOR CORRECTION CAPACITORS FOR THE 6 TWAS PUMPS WERE PROVIDED IN PACKAGE I.

(2) DISCONNECT TWAS PUMPS 1, 2 & 3 FROM OLD MCC-3C AND RE-FEED FROM THIS MCC.

(3) EXTEND CONDUITS PROVIDED IN PACKAGE I TO THICKENER #1 REPLACEMENT DRIVE AND CONTROL PANEL LOCATED ON THICKENER BRIDGE STRUCTURE.

(4) PROVIDE FEEDER AND CONTROL CIRCUITS TO THICKENER #1 REPLACEMENT DRIVE AND CONTROL PANEL.

(5) EXISTING CP TWAS. SIEMENS S7/300. SEE INSTRUMENTATION DRAWING I-101

(6) LOCAL CONTROL PANEL PROVIDED BY MANUFACTURER.

(7) PROVIDE HARD WIRED 'E' STOP FROM OVER TORQUE LIMIT SWITCH TO MCC-3C BUCKET.

ELECTRICAL LOAD ANALYSIS MCC-3C

LOAD DESCRIPTION	SECTION 'A' CONNECTED LOAD AMPS @480/277V	SECTION 'A' MULT.	SECTION 'A' NEC LOAD AMPS @ 480/277V	SECTION 'B' CONNECTED LOAD AMPS @480/277V	SECTION 'B' MULT.	SECTION 'B' NEC LOAD AMPS @ 480/277V	TOTAL LOAD CONNECTED LOAD AMPS @480/277V	TOTAL LOAD MULT.	TOTAL LOAD NEC LOAD AMPS @ 480/277V
20 HP TWAS PUMPS (3)	81.0	1.00	81.0				81.0	1.00	81.0
10 HP TWAS PUMPS (3)				42.0	1.00	42.0	42.0	1.00	42.0
7.5 HP SCREEN CONVEYOR		1.00	0.0	11.0	1.00	11.0	11.0	1.00	11.0
2 HP THICKENER DRIVE (2)	3.4	1.00	3.4	3.4	1.00	3.4	6.8	1.00	6.8
1 HP SCREEN DRIVE (3)	0.0	1.00	0.0	6.3	1.00	6.3	6.3	1.00	6.3
EXTERIOR LIGHTING		1.25	0.0	5.7	1.25	7.1	5.7	1.25	7.1
EXTERIOR UTILITY OUTLETS (7 x 180 VA)		1.00	0.0	1.8	1.00	1.8	1.8	1.00	1.8
EXISTING BUILDING LOADS	5.0	1.25	6.3	31.3	1.25	39.1	36.3	1.25	45.3
EXISTING AIR CONDITIONER		1.00	0.0	24.0	1.00	24.0	24.0	1.00	24.0
25% OF LARGEST MOTOR	6.8	1.00	6.8	6.8	1.00	6.8	6.8	1.00	6.8
	SECTION 'A' LOAD		97.5	SECTION 'B' LOAD		141.5	TOTAL LOAD		232.1

TOTAL LOAD = 232.1 AMPS

No.	Date	Revisions	Appr.

STATE OF TEXAS
LARRY M. BARFIELD
39337
REGISTERED PROFESSIONAL ENGINEER
9-21-11

Binkley & Barfield, Inc
consulting engineers
Texas Registration Number F-257
1710 Seamist Drive
Houston, Texas 77008-3189
(713) 869-3433

SURVEYED BY: AMANI ENG. | FIELD BOOK NO. : P-5486

CITY OF HOUSTON
DEPARTMENT OF PUBLIC WORKS AND ENGINEERING

ALMEDA SIMS WWTP & SPF IMPROVEMENTS PACKAGE II

MCC-3C ONE LINE DIAGRAM
SHEET 1 OF 2

FILE NO:	-
WBS: R-000298-0005-4	
DRAWING SCALE	
NTS	
CITY OF HOUSTON PM	
IRAJ RANJBAR, P.E.	
DWG NO. :	E-105
SHEET NO.	95 OF 147

PUBLIC WORKS AND ENGINEERING
ACCEPTED & FILED
49061
CITY DRAWING NUMBER
HOUSTON, TEXAS

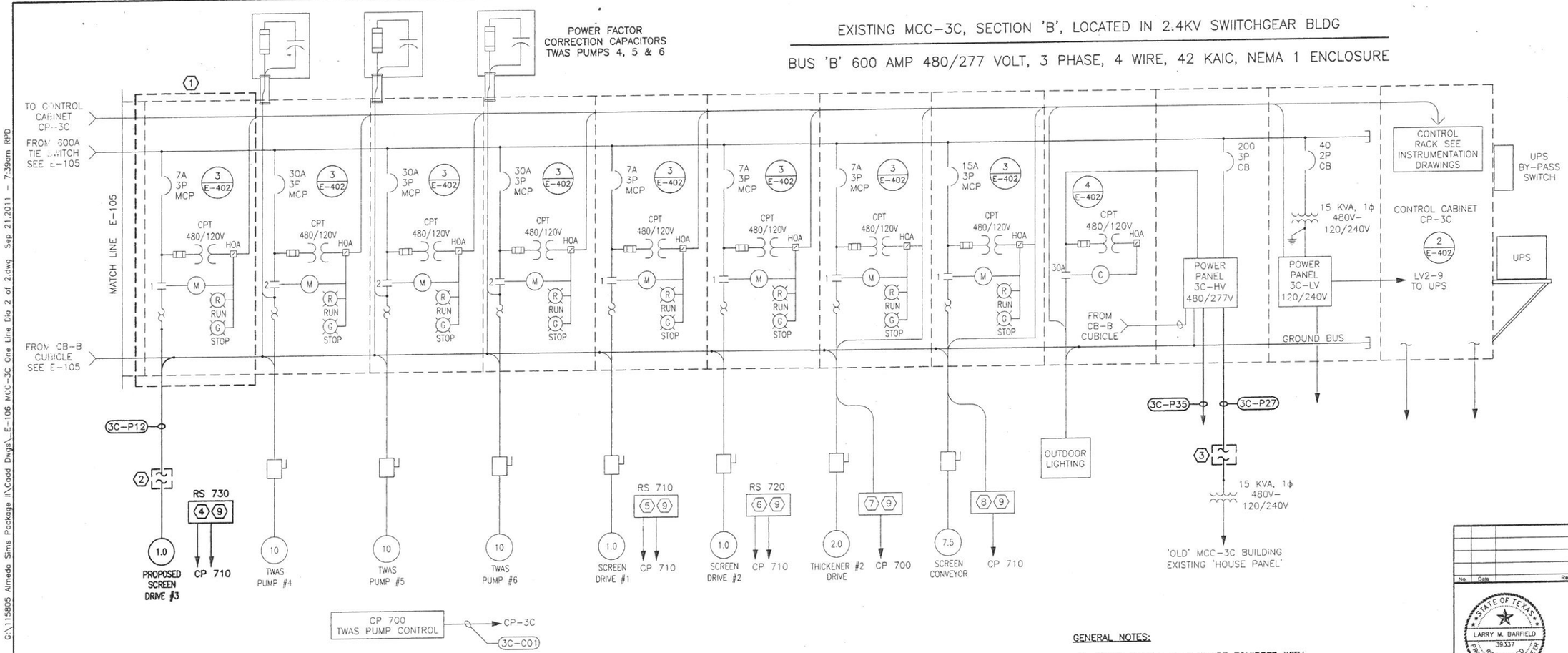

GENERAL NOTES:

1. SPARE SPACES IN MCC ARE EQUIPPED WITH VERTICAL BUSING FOR FUTURE USE.

KEYED NOTES:

(1) MCC BUCKET WITH STARTER AND CONTROL DEVICES FOR PROPOSED SCREEN DRIVE #3. PROVIDED IN PACKAGE I.

(2) COMPLETE CONDUIT INSTALLATION PROVIDED IN PACKAGE I. INSTALL FEEDER AND CONTROL CIRCUITS TO PROPOSED SCREEN DRIVE #3.

(3) COMPLETE CONDUIT INSTALLATION PROVIDED BY PACKAGE I & INSTALL FEEDER CIRCUIT FROM BREAKER PANEL '3C-HV', SLOTS 2 & 4 TO 15 KVA TRANSFORMER IN OLD MCC-3C BUILDING

(4) PROPOSED SKID MOUNTED SCREEN CONTROL PANEL RS 730

(5) EXISTING SKID MOUNTED SCREEN CONTROL PANEL RS 710

(6) EXISTING SKID MOUNTED SCREEN CONTROL PANEL RS 720

(7) EXISTING THICKENER #2 CONTROL PANEL CP 750

(8) EXISTING SCREEN CONVEYOR CONTROL PANEL CP 750

(9) LOCAL CONTROL PANEL PROVIDED BY EQUIPMENT MANUFACTURER. CONTROLS CONNECT TO SCADA SYSTEM.

No	Date	Revisions	App.

STATE OF TEXAS
LARRY M. BARFIELD
39337
REGISTERED
PROFESSIONAL ENGINEER
9-21-11

Binkley & Barfield, Inc
consulting engineers
Texas Registration Number F-257
1710 Seamist Drive
Houston, Texas 77008-3189
(713) 869-3433

SURVEYED BY: AMANI ENG. FIELD BOOK NO. : P-5486

CITY OF HOUSTON
DEPARTMENT OF PUBLIC WORKS AND ENGINEERING

ALMEDA SIMS WWTP & SPF IMPROVEMENTS PACKAGE II

MCC-3C ONE LINE DIAGRAM
SHEET 2 OF 2

FILE NO:	-
WBS: R-000298-0005-4	
DRAWING SCALE	
NTS	
CITY OF HOUSTON PM	
IRAJ RANJBAR, P.E.	
DWG NO. :	E-106
SHEET NO.	96 OF 147

PUBLIC WORKS AND ENGINEERING
ACCEPTED & FILED
49061
CITY DRAWING NUMBER
HOUSTON, TEXAS

G:\115805 Almeda Sims Package II\Cadd Dwgs_E-106 MCC-3C One Line Dia 2 of 2.dwg Sep 21,2011 - 7:39am RPD
COLOR TABLE:
ORIGINAL SCALE IN INCHES FOR REDUCED PLANS
0 1 2 3

C:\115805 Almeda Sims Package II\Cadd Dwgs\E-107 Screening Facility Mod. 1 of 2 - Plan View.dwg Jan 10,2012 - 12:30pm rpd

GENERAL NOTES:

1. CONDUIT ROUTING IS SCHEMATIC IN NATURE. THE CONTRACTOR SHALL DETERMINE THE BEST CONDUIT ROUTES FOR BOTH POWER AND CONTROL OF THE SCREENING EQUIPMENT.
2. CONDUITS ON SCREENING STRUCTURE SHALL BE 3/4" PVC COATED RGS MINIMUM. ALL MOUNTING HARDWARE SHALL BE STAINLESS STEEL.
3. THE CONTRACTOR SHALL ROUTE CONDUITS TO AVOID INTERFERENCE WITH MAINTENANCE AND/OR REPLACEMENT OF MECHANICAL AND PIPING SYSTEM COMPONENTS.
4. CONTRACTOR SHALL DOCUMENT THE LOCATION OF ALL CONDUITS ON RED LINE MARKUP DRAWINGS SO THAT THEY CAN BE ACCURATELY SHOWN ON 'AS-BUILT' RECORD DRAWINGS.
5. SEE SHEETS E-107 AND E-400 FOR PACKAGE II CONDUIT SCHEDULES
6. SEE INSTRUMENTATION DRAWINGS FOR PROFIBUS AND CONTROL SYSTEM DETAILS.
7. [P] DESIGNATES POWER HAND HOLE
8. [S] DESIGNATES SCADA/INSTRUMENTATION HAND HOLE

KEYED NOTES:

(1) CONTROL CABINET CP 710 IS PROVIDED WITH 120 VOLT UPS POWER FOR THE SCADA I/O EQUIPMENT ONLY AND 120 VOLT UTILITY POWER FOR THE SCREEN LUBRICATION PUMPS, CONVEYOR WASH DOWN SOLENOID, AND ANCILLARY EQUIPMENT. SEE SHEET E-401, DETAIL 1.

(2) ROUTE CIRCUIT FROM HAND HOLE P2 TO SCREEN DRIVE PACKAGE DISCONNECT SWITCH

DUCTBANK SECTION A - A (EXISTING)

3C-P09, P-12, P-35	3C-P27	3C-C01 *
3C-P06	3C-P07	3C-P08
3C-P16, P-17, P-18	3C-P19, P28, P29	3C-P30, P31, P32, P33
3C-P13	3C-P14	3C-P15

DUCTBANK SECTION B - B (EXISTING)

SPARE	3C-P27	3C-C01 *
3C-P06	3C-P07	3C-P08
3C-P09	3C-C07 **	3C-P30, P33 120 V UPS (P32)
3C-P13	3C-P14	3C-P15

** THICKENER #2 HARD WIRE CONTROL CIRCUITS TO CP 700 PER INSTRUMENTATION DRAWINGS.

* CONSULT INSTRUMENTATION DRAWINGS FOR PROFIBUS CABLING REQUIREMENTS BETWEEN CP 3C, CP 700, CP 710 & CP TWAS

DUCTBANK SECTION D - D (EXISTING)

SPARE	3C-P30, P33 ***
3C-C07 **	3C-P18

** THICKENER #2 HARD WIRE CONTROL CIRCUITS TO CP 700 PER INST DWGS

*** 120 VOLT UTILITY OUTLET AND STANCHION LIGHT CIRCUITS.

SEE CORRESPONDING CONDUIT & CABLE SCHEDULES FOR ADDITIONAL DETAILS

CIRCUITS IN BOLD FONT AND WITH BOLD BORDERS ARE TO BE EXTENDED AND/OR INSTALLED IN THIS PROJECT. VERIFY ALL CIRCUITING DETAILS WITH CONDUIT AND CABLE SCHEDULES.

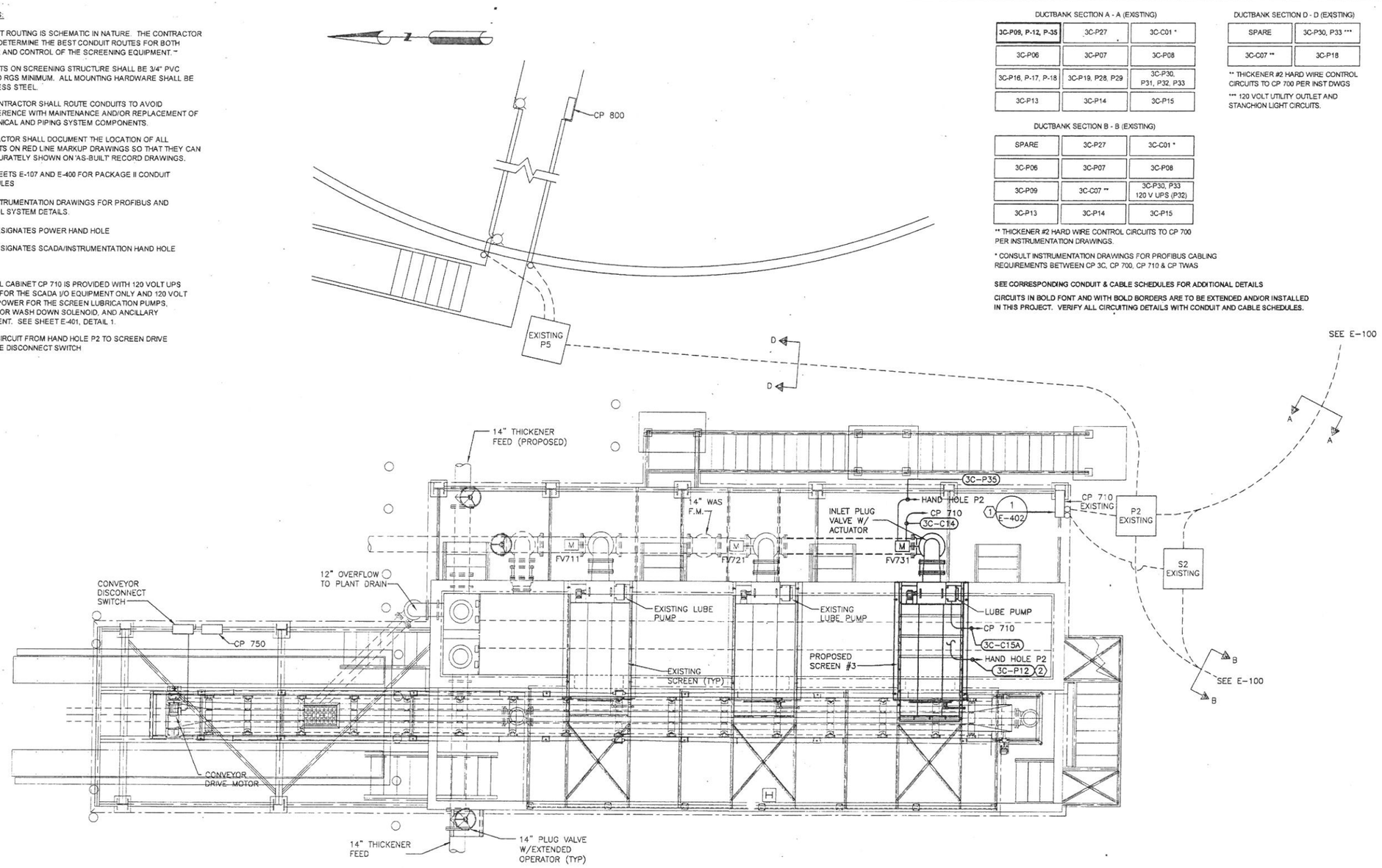

PACKAGE II SCREENING FACILITY CONDUIT and CABLE SCHEDULE

(SEE SHEET E-400 FOR PACKAGE I CONDUIT SCHEDULES)

CONDUIT TAG No.	CABLE SIZE & QUANTITY	CONDUIT SIZE	VOLTAGE	FROM	TO	COMMENTS/REMARKS
3C-P12	3 x #10, #10 GND		480	SCREEN DRIVE #3 STARTER	SCREEN DRIVE #3 R.D. DISCONNECT SW	SHARE DUCT BANK CONDUIT WITH 3C-P09
3C-P35	3 x #10, #10 GND		480	PANEL 3C-HV	MOV FV 731	
3C-C11	2 PAIR #16	3/4"	CONTROL SIGNALS	BYPASS VALVE	CP 710	VALVE POSITION INDICATOR SWITCH
3C-C12	6 PAIR #16	3/4"	CONTROL SIGNALS	MOV FV711	CP 710	
3C-C13	6 PAIR #16	3/4"	CONTROL SIGNALS	MOV FV721	CP 710	
3C-C14	6 PAIR #16	3/4"	CONTROL SIGNALS	MOV FV731	CP 710	
3C-C15	12 PAIR #16	3/4"	CONTROL SIGNALS	RS 710 SCREEN PACKAGE #3	CP 710	ROTARY SCREEN CONTROLS
3C-C15A	6 x #14	3/4"	120 VOLT	RS 710 SCREEN PACKAGE #3	CP 710 SEE SHEET E-405 DETAIL 2	120 VOLT POWER FOR SOLENOIDS AND LUBRICATION PUMP

No.	Date	Revisions	App.

STATE OF TEXAS
LARRY M. BARFIELD
39337
REGISTERED
PROFESSIONAL ENGINEER

Binkley & Barfield, Inc
consulting engineers
Texas Registration Number F-257
1710 Seamist Drive
Houston, Texas 77008-3189
(713) 869-3433

SURVEYED BY: AMANI ENG. | FIELD BOOK NO. : P-5486

CITY OF HOUSTON
DEPARTMENT OF PUBLIC WORKS AND ENGINEERING

ALMEDA SIMS WWTP & SPF IMPROVEMENTS PACKAGE II

SCREENING FACILITY MODIFICATION PLAN 1 OF 2 PLAN VIEW

FILE NO:	–
WBS:	R-000298-0005-4
DRAWING SCALE	1/4" = 1'-0"
CITY OF HOUSTON PM	IRAJ RANJBAR, P.E.
DWG NO. :	E-107
SHEET NO.	97 OF 147

PUBLIC WORKS AND ENGINEERING
ACCEPTED & FILED
490614
CITY DRAWING NUMBER
HOUSTON, TEXAS

COLOR TABLE:

ORIGINAL SCALE IN INCHES FOR REDUCED PLANS
0 1 2 3

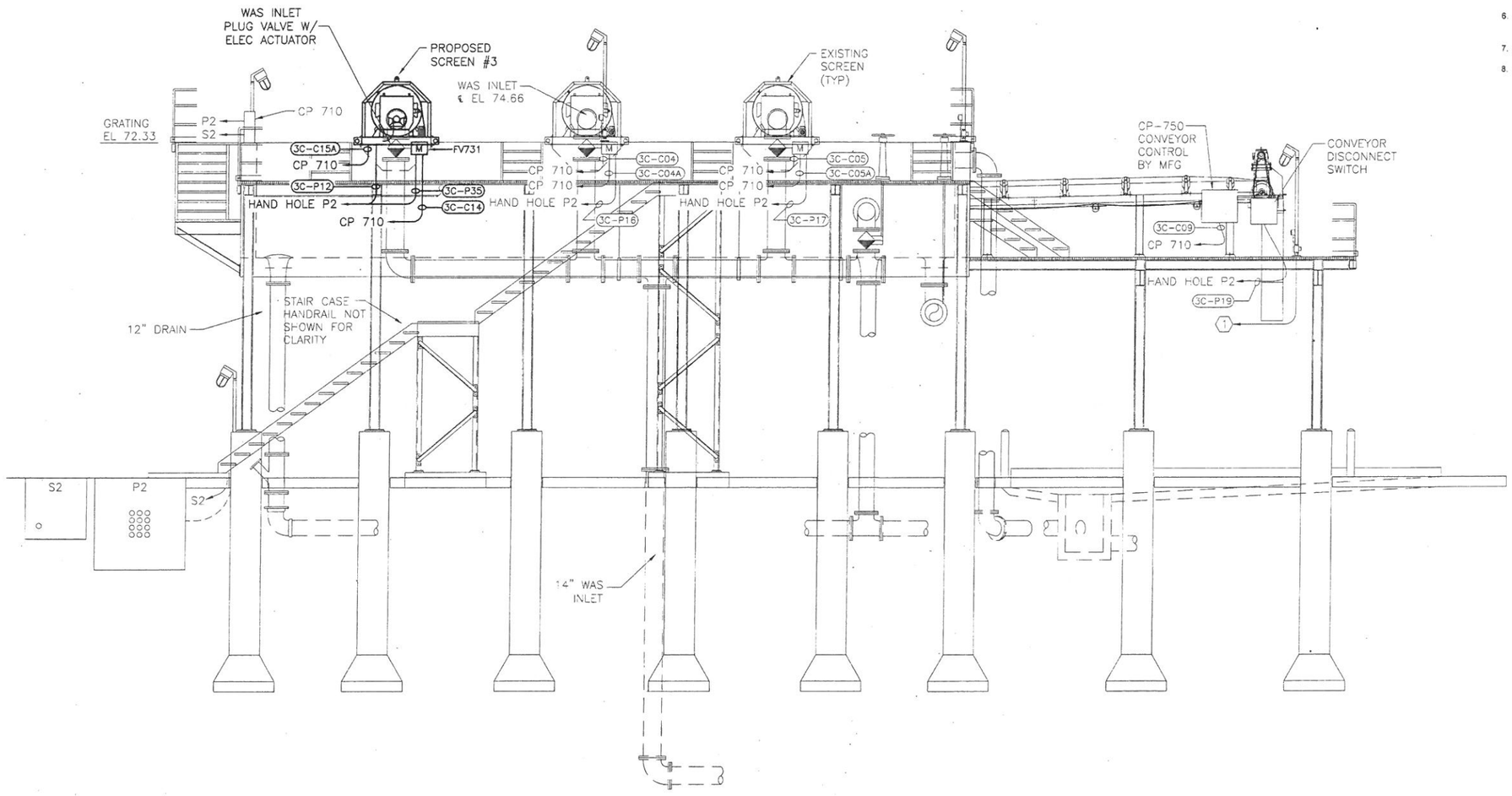

SCREENS FACILITY PROFILE EAST ELEVATION

GENERAL NOTES:

1. CONDUIT ROUTING IS SCHEMATIC IN NATURE. THE CONTRACTOR SHALL DETERMINE THE BEST CONDUIT ROUTES FOR BOTH POWER AND CONTROL OF THE SCREENING EQUIPMENT.
2. CONDUITS ON SCREENING STRUCTURE SHALL BE 3/4" PVC COATED RGS MINIMUM. ALL MOUNTING HARDWARE SHALL BE STAINLESS STEEL.
3. THE CONTRACTOR SHALL ROUTE CONDUITS TO AVOID INTERFERENCE WITH MAINTENANCE AND/OR REPLACEMENT OF MECHANICAL AND PIPING SYSTEM COMPONENTS.
4. CONTRACTOR SHALL DOCUMENT THE LOCATION OF ALL CONDUITS ON RED LINE MARKUP DRAWINGS SO THAT THEY CAN BE ACCURATELY SHOWN ON 'AS-BUILT' RECORD DRAWINGS.
5. SEE SHEETS E-107 AND E-400 FOR PACKAGE II CONDUIT SCHEDULES
6. SEE INSTRUMENTATION DRAWINGS FOR PROFIBUS AND CONTROL SYSTEM DETAILS.
7. [P] DESIGNATES POWER HAND HOLE
8. [S] DESIGNATES SCADA/INSTRUMENTATION HAND HOLE

No.	Date	Revisions	App.

STATE OF TEXAS
LARRY M. BARFIELD
39337
REGISTERED
PROFESSIONAL ENGINEER
1/14/13

Binkley & Barfield, Inc
consulting engineers
Texas Registration Number F-257
1710 Seamist Drive
Houston, Texas 77008-3169
(713) 869-3433

SURVEYED BY: AMANI ENG. | FIELD BOOK NO. : P-5486

CITY OF HOUSTON
DEPARTMENT OF PUBLIC WORKS AND ENGINEERING

ALMEDA SIMS WWTP & SPF IMPROVEMENTS PACKAGE II

SCREENING FACILITY
MODIFICATION PLAN 2 OF 2
EAST ELEVATION

FILE NO:	–
WBS: R-000298-0005-4	
DRAWING SCALE	
1/4" = 1'-0"	
CITY OF HOUSTON PM	
IRAJ RANJBAR, P.E.	
DWG NO. :	E-108
SHEET NO.	98 OF 147

PUBLIC WORKS AND ENGINEERING
ACCEPTED & FILED
49061
CITY DRAWING NUMBER
HOUSTON, TEXAS

G:\115805 Almeda Sims Package II\Cadd Dwgs_E-108 Screening Facility Mod. 2 of 2 – East Elev.dwg Jan 10,2012 – 12:01pm rpd

COLOR TABLE:

ORIGINAL SCALE IN INCHES
FOR REDUCED PLANS
0 1 2 3

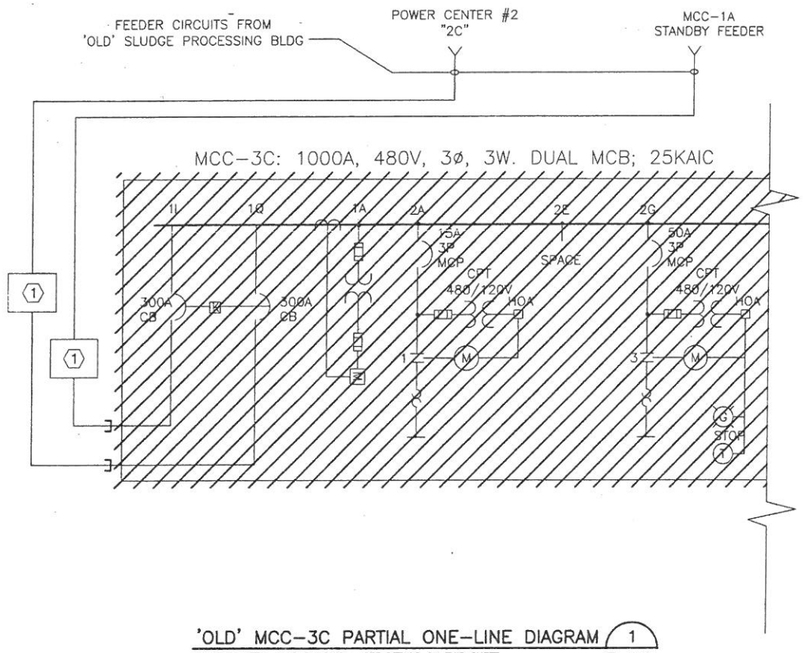

'OLD' MCC-3C PARTIAL ONE-LINE DIAGRAM (1) E-109

LOCATION METAL CLAD BUILDING - SEE DETAILS ON THIS SHEET

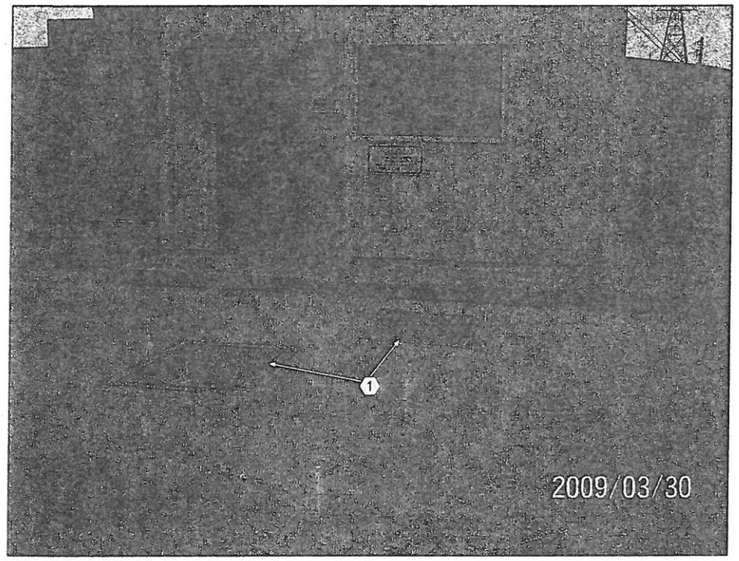

'OLD' MCC-3C BUILDING (2) E-109

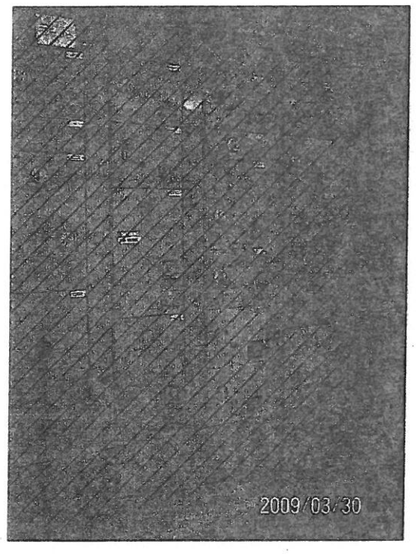

'OLD' MCC-3C 1 of 2 (3) E-109

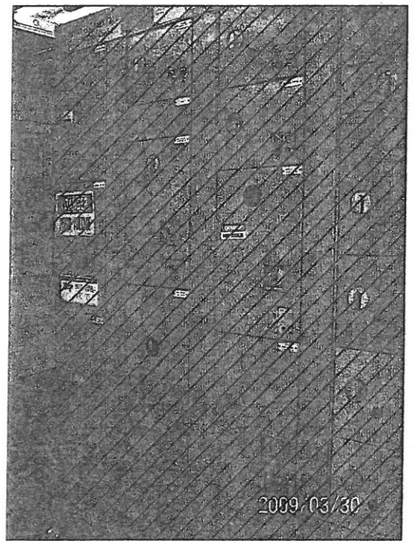

'OLD' MCC-3C 2 of 2 (4) E-109

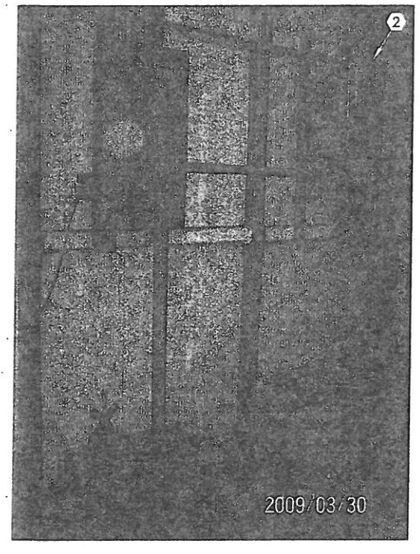

'OLD' MCC-3C BUILDING BREAKER PANEL & TRANSFORMER (5) E-109

GENERAL NOTES:

1. LOCATE AND DISCONNECT FEEDER CIRCUITS TO 'OLD' MCC-3C (MCC) AT THEIR SOURCE. IF PRACTICAL, REMOVE CABLES FROM SOURCE TO HAND HOLES INDICATED BY KEYED NOTE #1. IF NOT, TAPE ENDS OF DISCONNECTED CABLES AND ABANDON IN PLACE.
2. CUT FEEDER CABLES IN HAND HOLES INDICATED BY KEYED NOTE #1 AND REMOVE CABLES FROM MCC TO HAND HOLES.
3. DISCONNECT AND REMOVE ALL CONDUITS FROM MCC.
4. REMOVE ALL SECTIONS OF MCC. DISPOSE OF ALL PARTS THAT THE CITY DOES NOT WISH TO KEEP.
5. DEMOLISH HOUSEKEEPING PAD AND CONDUITS ENTERING MCC THROUGH THE SLAB. REPAIR SLAB WITH SUITABLE GROUT TO PROVIDE A SMOOTH, LEVEL FLOOR.

KEYED NOTES:

(1) MCC FEEDER CIRCUIT HAND HOLES.

(2) 15 KVA TRANSFORMER FOR 'HOUSE' PANEL. RE-FEED WITH CIRCUIT 3C-P27 FROM 'NEW' MCC-3C. SEE SHEETS E-100 AND E-106 FOR DETAILS.

No.	Date	Revisions	App.

STATE OF TEXAS
LARRY M. BARFIELD
39337
REGISTERED
PROFESSIONAL ENGINEER
9-21-11

Binkley & Barfield, Inc
consulting engineers
Texas Registration Number F-257
1710 Seamist Drive
Houston, Texas 77008-3189
(713) 869-3433

SURVEYED BY: AMANI ENG. | FIELD BOOK NO. : P-5486

CITY OF HOUSTON
DEPARTMENT OF PUBLIC WORKS AND ENGINEERING

ALMEDA SIMS WWTP & SPF
IMPROVEMENTS PACKAGE II

ELECTRICAL DEMOLITION
'OLD' MCC-3C

FILE NO:	-
WBS: R-000298-0005-4	
DRAWING SCALE	NTS
CITY OF HOUSTON PM	IRAJ RANJBAR, P.E.
DWG NO. :	E-109
SHEET NO.	99 OF 147

PUBLIC WORKS AND ENGINEERING
ACCEPTED & FILED
49061
CITY DRAWING NUMBER
HOUSTON, TEXAS

C:\115805 Almeda Sims Package II\Cadd Dwgs\E-109 OLD MCC-3C Demo.dwg Sep 21,2011 - 7:46am RPD
COLOR TABLE:
ORIGINAL SCALE IN INCHES FOR REDUCED PLANS
0 1 2 3

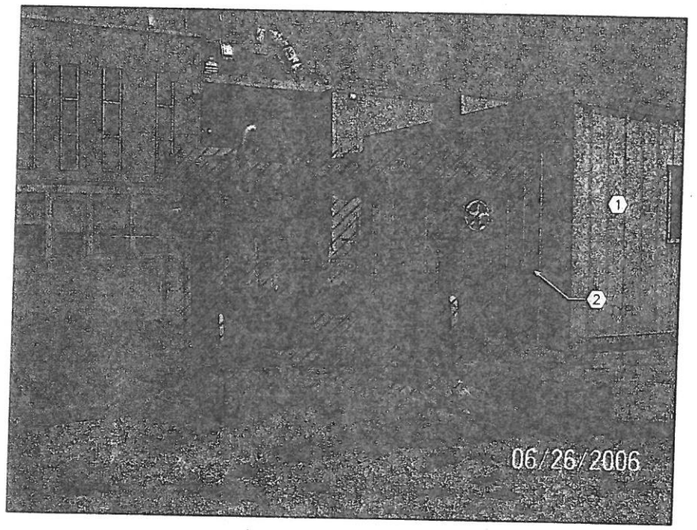

'OLD' TWAS PUMPS VIEW 1 OF 4 (1 / E-110)

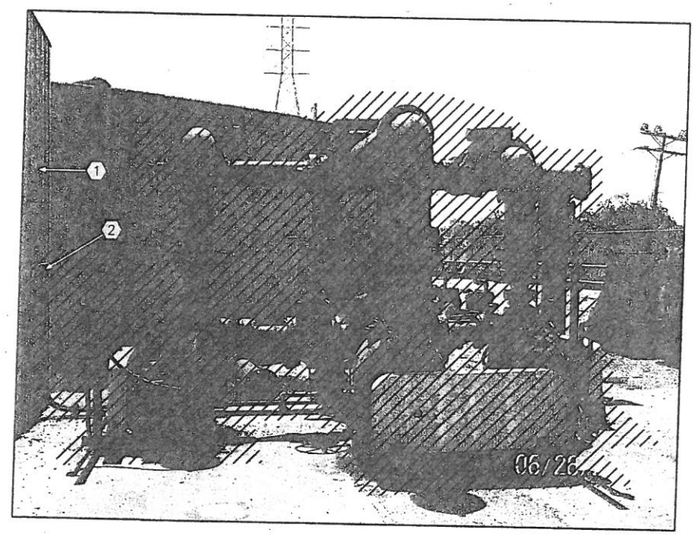

'OLD' TWAS PUMPS VIEW 2 OF 4 (2 / E-110)

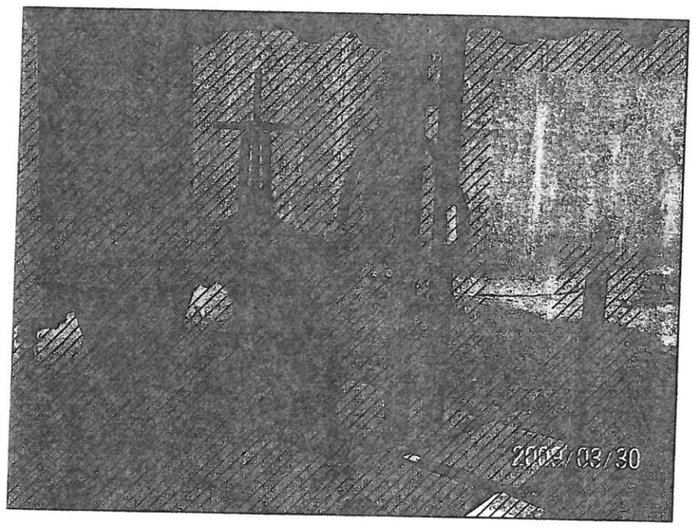

'OLD' TWAS PUMPS VIEW 3 OF 4 (3 / E-110)

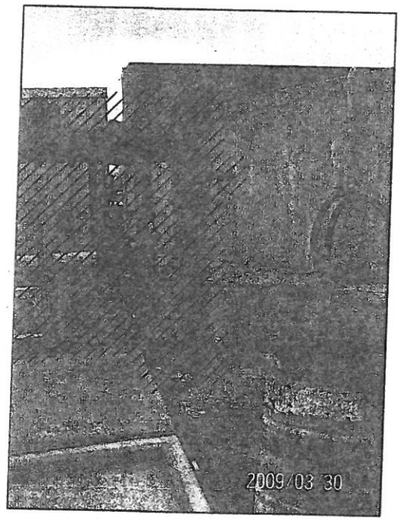

'OLD' TWAS PUMPS VIEW 4 OF 4 (4 / E-110)

GENERAL NOTES:

1. ABANDONED TWAS PUMPS ARE LOCATED ON THE SOUTH SIDE OF THE 'OLD' MCC-3C BUILDING.
2. CLOSE AND SEAL ALL BUILDING PENETRATIONS.
3. SEE MECHANICAL AND PIPING DEMOLITION DRAWINGS FOR FURTHER INSTRUCTIONS

KEYED NOTES:

(1) 'OLD' MCC-3C BUILDING

(2) DISCONNECT AND REMOVE ALL CONDUITS AND WIRING BACK TO 'OLD' MCC-3C.

No	Date	Revisions	App.

STATE OF TEXAS
LARRY M. BARFIELD
39337
REGISTERED PROFESSIONAL ENGINEER
4-21-11

Binkley & Barfield, Inc
consulting engineers
Texas Registration Number F-257
1710 Seamist Drive
Houston, Texas 77008-3189
(713) 869-3433

SURVEYED BY: AMANI ENG. | FIELD BOOK NO. : P-5486

CITY OF HOUSTON
DEPARTMENT OF PUBLIC WORKS AND ENGINEERING

ALMEDA SIMS WWTP & SPF IMPROVEMENTS PACKAGE II

'OLD' TWAS PUMPS 1, 2 & 3 ELECTRICAL DEMOLITION

FILE NO:	-
WBS: R-000298-0005-4	
DRAWING SCALE	3/16" = 1'-0"
CITY OF HOUSTON PM	IRAJ RANJBAR, P.E.
DWG NO. :	E-110
SHEET NO. 100 OF 147	

PUBLIC WORKS AND ENGINEERING
ACCEPTED & FILED
49061
CITY DRAWING NUMBER
HOUSTON, TEXAS

C:\115805 Almeda Sims Package II\Cadd Dwgs_E-110 Old TWAS Pump Demo.dwg Sep 21,2011 - 7:48am RPD

COLOR TABLE:

ORIGINAL SCALE IN INCHES FOR REDUCED PLANS
0 1 2 3

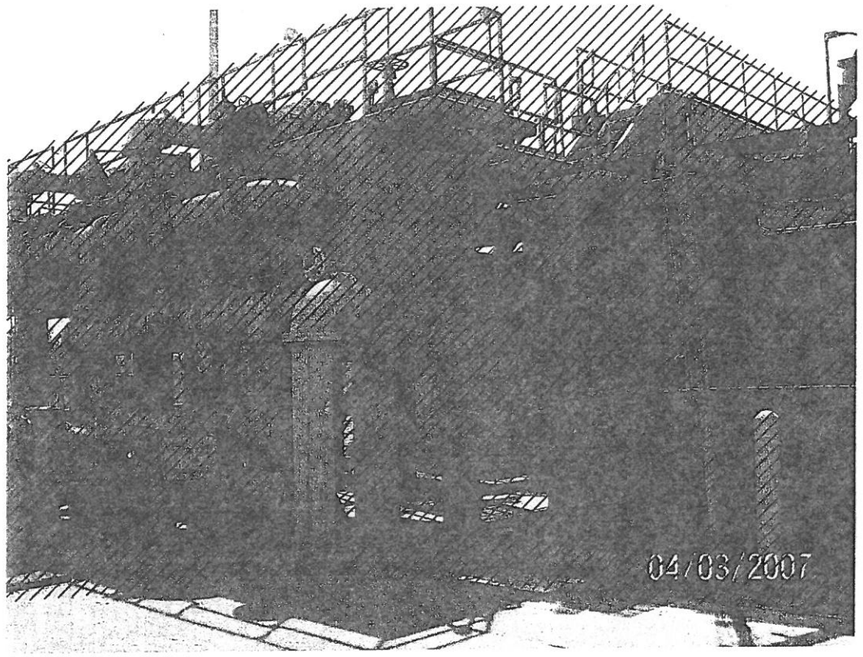

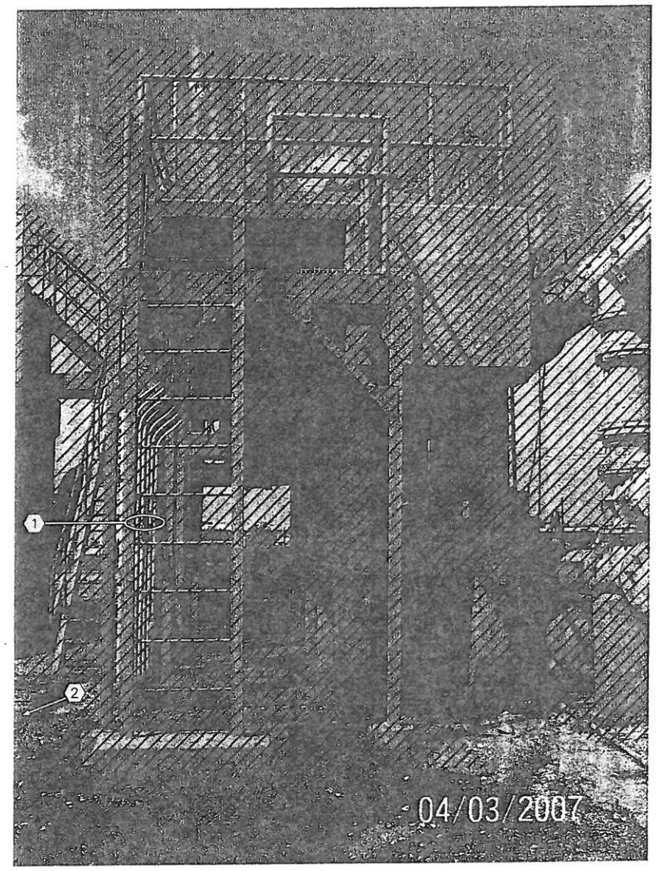

GENERAL NOTES:

1. IDENTIFY, DISCONNECT AND REMOVE ALL CIRCUIT WIRING BACK TO POINT OF ORIGIN.
2. DISCONNECT AND DISPOSE OF ALL ELECTRICAL EQUIPMENT THAT THE COH DOES NOT WISH TO KEEP.
3. SEE SHEET C-103 FOR ADDITIONAL INFORMATTION

KEYED NOTES:

(1) CONDUITS ON STRUCTURE COMING FROM ADJACENT HAND HOLE.

(2) APPROXIMATE HAND HOLE LOCATION.

No.	Date	Revisions	App.

STATE OF TEXAS
LARRY M. BARFIELD
39337
REGISTERED
PROFESSIONAL ENGINEER
9-21-11

Binkley & Barfield, Inc
consulting engineers
Texas Registration Number F-257
1710 Seamist Drive
Houston, Texas 77008-3189
(713) 869-3433

SURVEYED BY: AMANI ENG. | FIELD BOOK NO. : P-5486

CITY OF HOUSTON
DEPARTMENT OF PUBLIC WORKS AND ENGINEERING

ALMEDA SIMS WWTP & SPF IMPROVEMENTS PACKAGE II

EXISTING SCREENING FACILITY STRUCTURE ELECTRICAL DEMOLITION

FILE NO:	-
WBS: R-000298-0005-4	
DRAWING SCALE	
NO SCALE	
CITY OF HOUSTON PM	
IRAJ RANJBAR, P.E.	
DWG NO. :	E-111
SHEET NO. 101 OF 147	

PUBLIC WORKS AND ENGINEERING
ACCEPTED & FILED
49061
CITY DRAWING NUMBER
HOUSTON, TEXAS

G:\115805 Advanced Bidset\Package II\Cadd Dwgs_E-111 Old Screening Facility Elec Demo.dwg Sep 21,2011 - 7:50am RPD
COLOR TABLE:
ORIGINAL SCALE IN INCHES FOR REDUCED PLANS
0 1 2 3

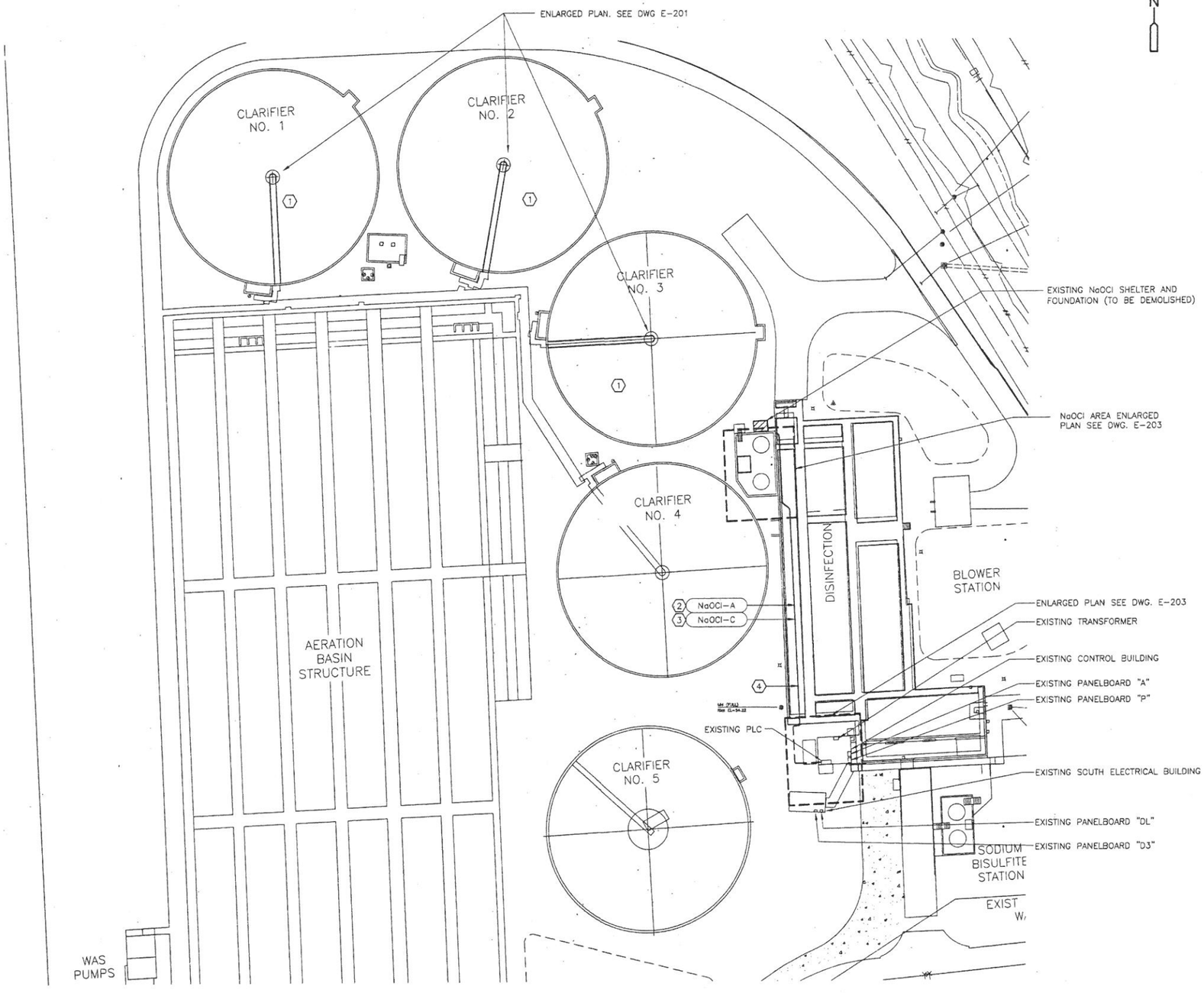

SITE PLAN
1:30

NOTES:

1. PROJECT REQUIRES REPLACEMENT OF EXISTING CLARIFIERS NO. 1,2,3 MECHANISMS AND REPLACEMENT OF EXISTING NaOCl SHELTER. CLARIFIER REPLACEMENT INCLUDES BUT IS NOT LIMITED TO CLARIFIER WALKWAY BRIDGE, SKIMMER ARM, CONTROL PANEL, DRIVE MOTOR, LIGHTING AND REVERSING CONTROL CIRCUIT/DEVICES. DISCONNECT POWER AND CONTROLS FOR EXISTING CLARIFIER BACK TO PULL BOXES ON THE OUTSIDE OF THE CLARIFIER CONCRETE BASIN, PROTECT CONDUCTORS.
2. 8 2/C #16TSP, 2"C.
3. 10 #12, #12 GND, 1"C.
4. ROUTE CONDUITS ON 316 S.S. STRUT ALONG HANDRAIL OF BASIN.

TO ARRANGE FOR LINES TO BE TURNED OFF OR MOVED, CALL CENTERPOINT AT 713-207-7777.

PRIVATE UTILITY LINES SHOWN
AT LEAST 48 HOURS BEFORE EXCAVATING IN STREET R.O.W. OR EASEMENTS CALL THE LONE STAR NOTIFICATION 713-223-4567.

N/A Date:
CenterPoint Energy/Electric Facilities
(Approval only for crossing underground ductlines, unless otherwise noted.)
Valid at time of review only.

N/A Date:
SBC Approved for underground conduit facilites only.
Signature valid for one year.

N/A Date:
CenterPoint Energy/Gas Facilities
(Gas service lines are not shown)

No.	Date	Revisions	App.

STATE OF TEXAS
MICHAEL R. MOSLEY
40433
LICENSED PROFESSIONAL ENGINEER
9-20-11

KGI Kalluri Group, Inc.
Consulting Engineers & Project Managers
TBPE Registration No. F-985
10497 Town & Country Way, Suite 220
Houston, Texas 77024
Phone: (713)-365-9288

Binkley & Barfield, Inc
consulting engineers
Texas Registration Number F-257
1710 Seamist Drive
Houston, Texas 77008-3189
(713) 869-3433

SURVEYED BY: AMANI ENG. | FIELD BOOK NO. : P-5486

CITY OF HOUSTON
DEPARTMENT OF PUBLIC WORKS AND ENGINEERING

ALMEDA SIMS WWTP & SPF IMPROVEMENTS PACKAGE II

CLARIFIER / NaOCl AREA SITE PLAN
ELECTRICAL

FILE NO:	-
WBS:	R-000298-0005-4
DRAWING SCALE	AS SHOWN
CITY OF HOUSTON PM	IRAJ RANJBAR, P.E.
DWG NO. :	E-200
SHEET NO.	102 OF 147

PUBLIC WORKS AND ENGINEERING
ACCEPTED & FILED
49061
CITY DRAWING NUMBER
HOUSTON, TEXAS

WARNING
0 1
IF THIS BAR DOES NOT MEASURE 1" THEN DRAWING IS NOT TO SCALE

FIT 570Z SCHEDULE	
CLARIFIER NO.	Z
1	A
2	B
3	C

PROVIDE CONDUITS, WIRING AND APPURTENANCES TO CONNECT ALL CLARIFIER EQUIPMENT, DEVICES AND INSTRUMENTS ADDRESSED IN SPECIFICATION 11386 AND INDICATED ON BID DOCUMENT DRAWINGS. COORDINATE WITH THE CLARIFIER VENDORS DURING THE BID PERIOD AND PROVIDE ALL MATERIALS, LABOR AND SUPERVISION REQUIRED FOR A COMPLETE WORKING SYSTEM.

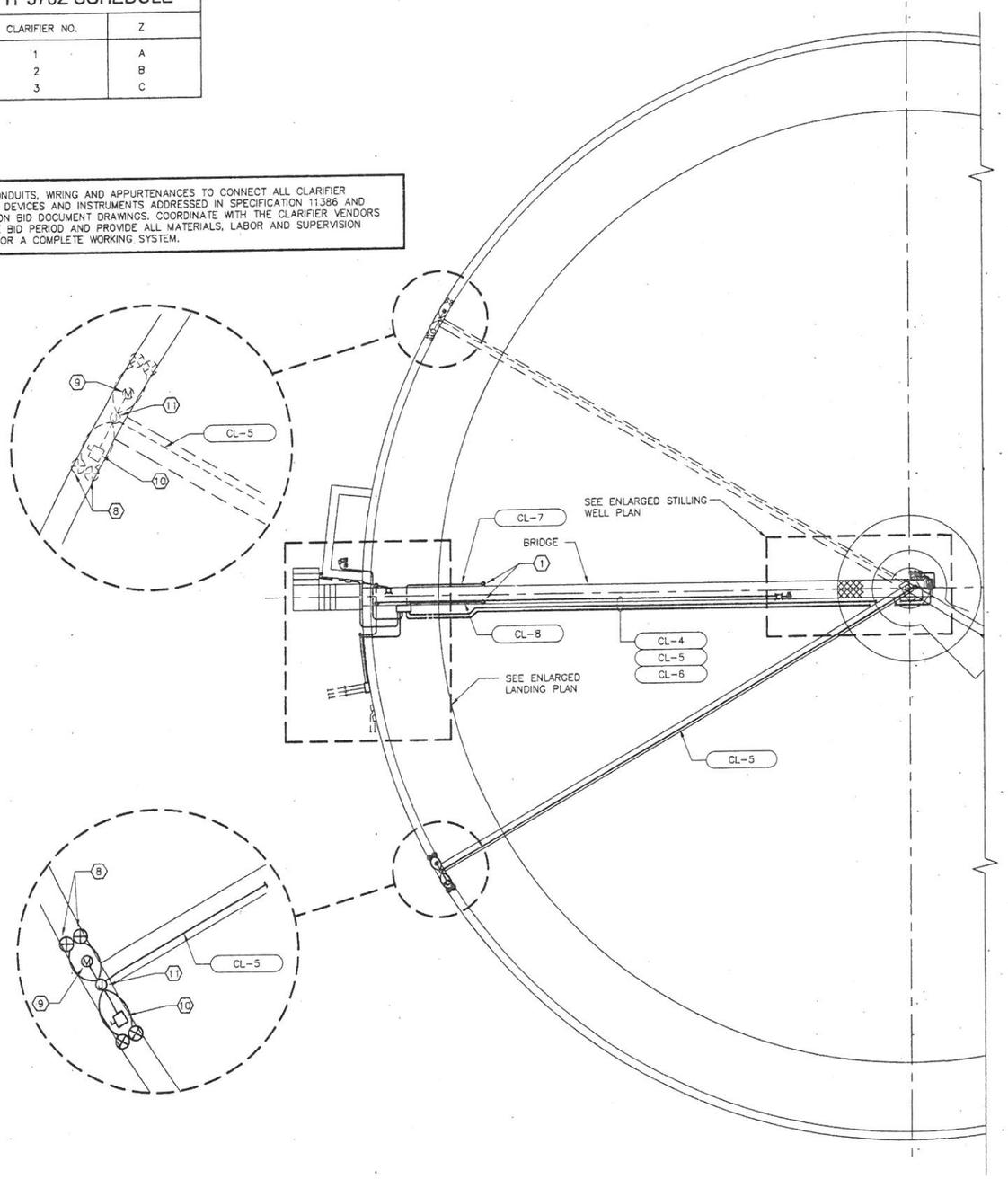

CLARIFIER No. 3 PLAN (TYP FOR CLARIFIER No. 1 AND No. 2)
1/8"=1'-0"

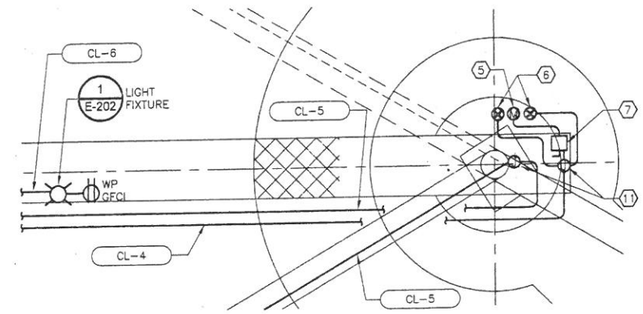

ENLARGED STILLING WELL PLAN
N.T.S

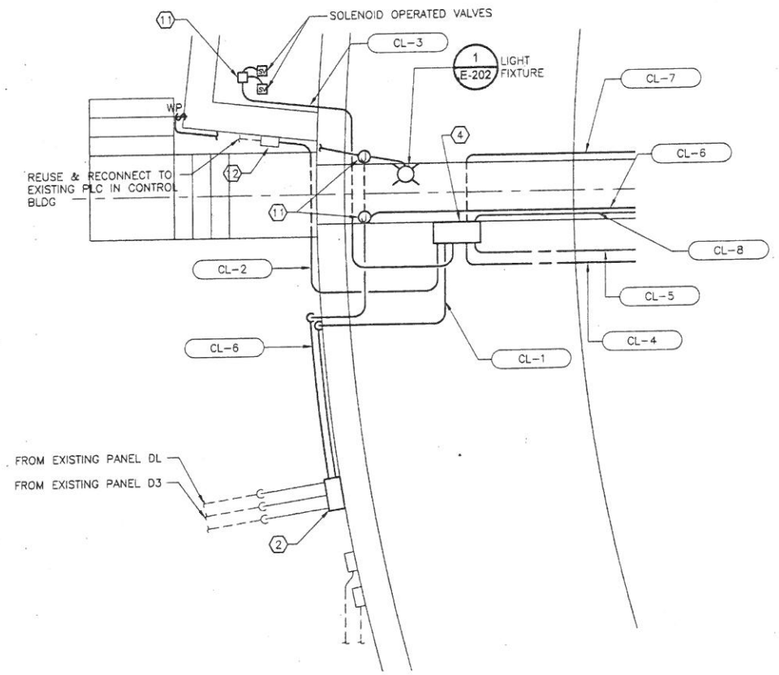

ENLARGED LANDING PLAN
N.T.S

GENERAL NOTES:

A. FIELD ROUTE ALL CONDUIT ON THE BRIDGE STRUCTURE TO PREVENT ANY POSSIBLE TRIPPING HAZARDS.

NOTES:

1. SCUM TROUGH ACTUATOR MOTOR.
2. REPLACE EXISTING PULL BOX WITH A 16"HX12"WX6"D NEMA 4X-316 S.S. JUNCTION BOX.
3. NOT USED.
4. CLARIFIER CONTROL PANEL IN A NEMA 4X-316 S.S ENCLOSURE. POSITION CONTROL PANEL FOR PROPER WORK SPACE IN FRONT OF PANEL AS INDICATED IN THE NATIONAL ELECTRICAL CODE. SEE DETAIL 2 AND 3 ON DWG. E-202.
5. CLARIFIER MOTOR. VERIFY LOCATION WITH MECHANICAL AND EQUIPMENT SPECS.
6. CLARIFIER DRIVE TORQUE SWITCHES. VERIFY LOCATION OF DEVICES WITH EQUIPMENT DWGS.
7. CLARIFIER MOTOR DISCONNECT SWITCH.
8. SCUM BOOM LIMIT SWITCH.
9. SCUM BOOM MOTOR.
10. SCUM BOOM MOTOR DISCONNECT SWITCH.
11. NEMA 4X-316 S.S. PULL BOX.
12. REUSE EXISTING PULL BOX UNDER STAIRWAY.

TO ARRANGE FOR LINES TO BE TURNED OFF OR MOVED, CALL CENTERPOINT AT 713-207-7777.

PRIVATE UTILITY LINES SHOWN
AT LEAST 48 HOURS BEFORE EXCAVATING IN STREET R.O.W. OR EASEMENTS CALL THE LONE STAR NOTIFICATION 713-223-4567.

N/A Date:
CenterPoint Energy/Electric Facilities
(Approval only for crossing underground ductlines, unless otherwise noted.)
Valid at time of review only.

N/A Date:
SBC Approved for underground conduit facilities only.
Signature valid for one year.

N/A Date:
CenterPoint Energy/Gas Facilities
(Gas service lines are not shown)

No.	Date	Revisions	App.

STATE OF TEXAS
MICHAEL H. WOOLEY
40433
LICENSED PROFESSIONAL ENGINEER
9-20-11

KGI Kalluri Group, Inc.
Consulting Engineers & Project Managers
TBPE Registration No. F-665
10497 Town & Country Way, Suite 220
Houston, Texas 77024
Phone: (713)-365-9288

Binkley & Barfield, Inc
consulting engineers
Texas Registration Number F-257
1710 Seamist Drive
Houston, Texas 77008-3189
(713) 869-3433

SURVEYED BY: AMANI ENG. | FIELD BOOK NO. : P-5486

CITY OF HOUSTON
DEPARTMENT OF PUBLIC WORKS AND ENGINEERING

ALMEDA SIMS WWTP & SPF IMPROVEMENTS PACKAGE II

CLARIFIER PROPOSED PLAN

ELECTRICAL

FILE NO:	-
WBS: R-000298-0005-4	
DRAWING SCALE	AS SHOWN
CITY OF HOUSTON PM	IRAJ RANJBAR, P.E.
DWG NO. :	E-201
SHEET NO.	103 OF 147

PUBLIC WORKS AND ENGINEERING
ACCEPTED & FILED
49061
CITY DRAWING NUMBER
HOUSTON, TEXAS

WARNING
0 1
IF THIS BAR DOES NOT MEASURE 1" THEN DRAWING IS NOT TO SCALE

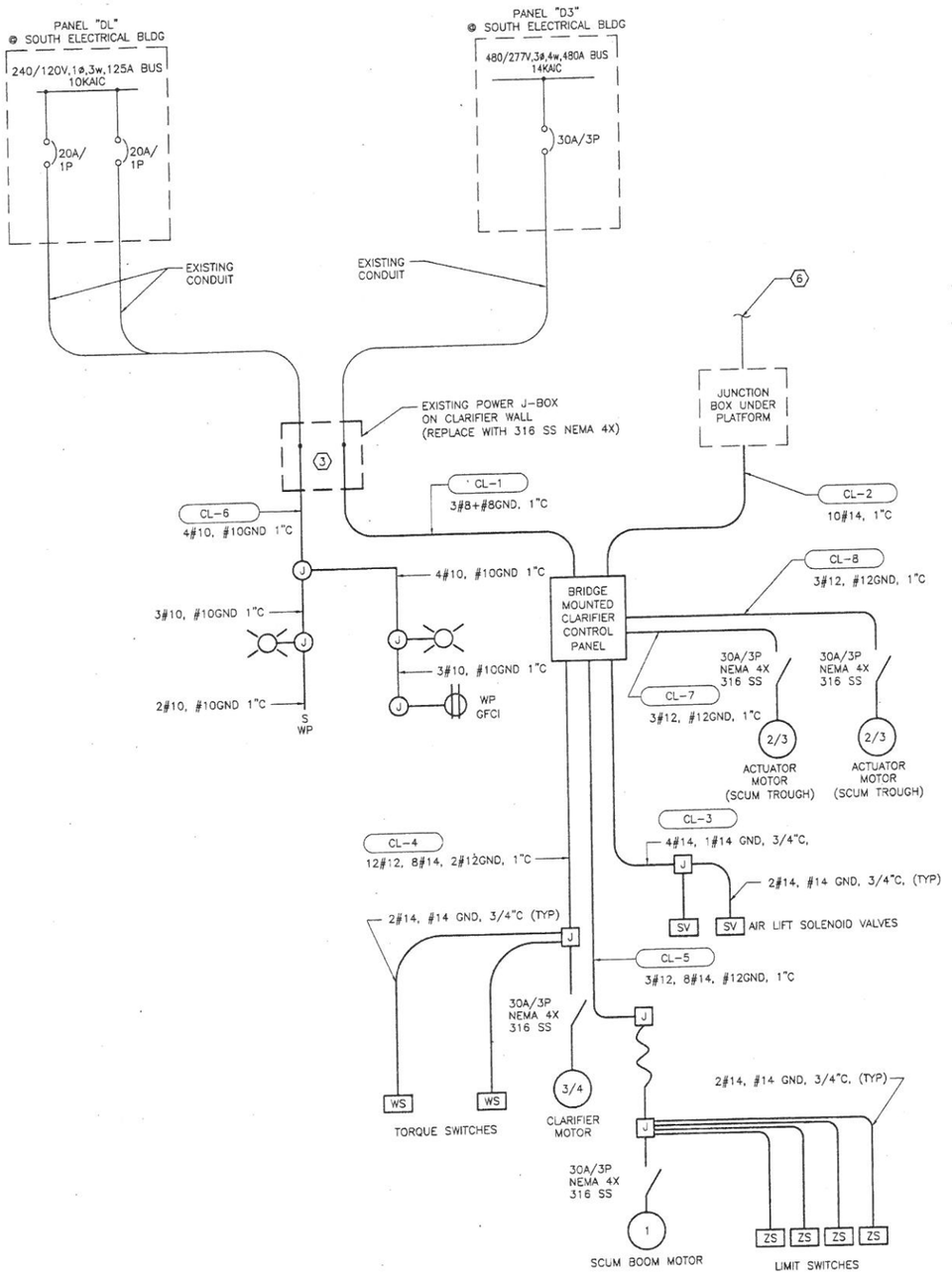

CLARIFIER TYPICAL SCHEMATIC DIAGRAM (TYP FOR No.1, 2 & 3)

REFER TO SHEET E-200 & E-201 FOR CLARIFIER LOCATIONS

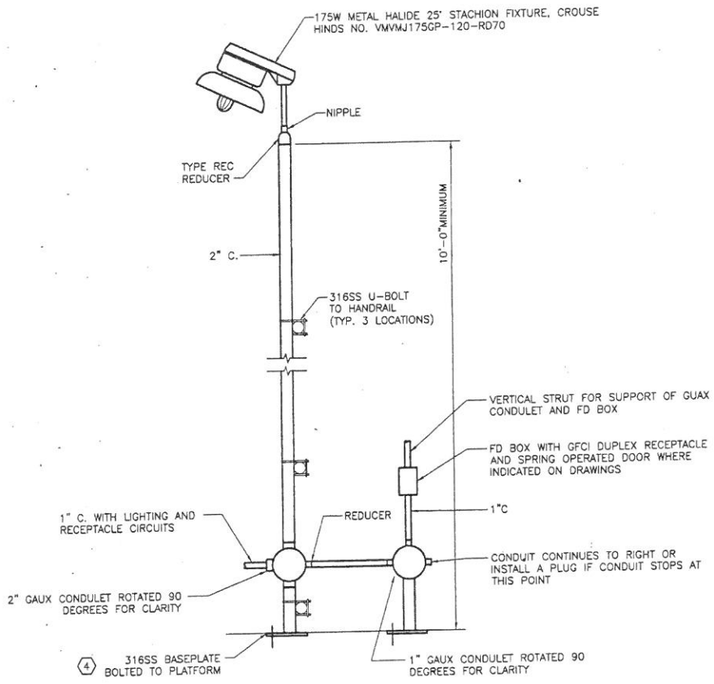

HANDRAIL MOUNTED LIGHT FIXTURE DETAIL

N.T.S

1 / E-201

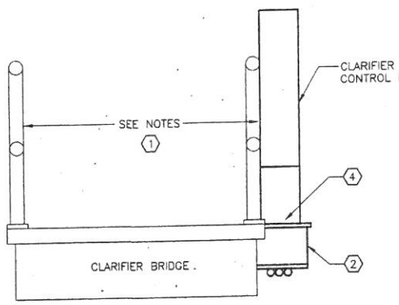

DETAIL 2 / E-201

1" = 1'-0"

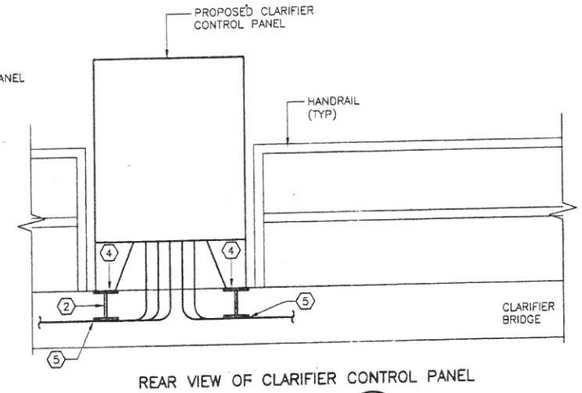

REAR VIEW OF CLARIFIER CONTROL PANEL

DETAIL 3 / E-201

1" = 1'-0"

NOTES:

1. PROVIDE MINIMUM OF 42" CLEARANCE BETWEEN CONTROL PANEL AND HANDRAIL.
2. PROVIDE SOLID STRUCTURAL SUPPORT AS REQUIRED FOR CLARIFIER CONTROL PANEL. PANEL MOUNTING IS FREE STANDING WITHOUT ATTACHMENT TO HAND RAILS.
3. EXISTING JUNCTION BOX WILL BE REPLACED WITH 316 SS NEMA 4X JUNCTION BOX IN THIS CONTRACT. REPLACE EXISTING CONDUITS BETWEEN CLARIFIER ELECTRICAL COMPONENTS AND JUNCTION BOX. RECONNECT CONDUCTORS TO EXISTING WIRING IN JUNCTION BOX ON CORROSION RESISTANT TERMINAL BLOCKS. (PHOENIX CONTACT UT SERIES OR APPROVED EQUAL)
4. ALL FASTENERS TO BE 316 SS.
5. ATTACH CONDUITS TO STRUCTURAL SUPPORTS WITH KORNS CLAMP.
6. TERMINATE EXISTING FIELD CONDUIT AND WIRING INSIDE JUNCTION BOX UNDER STAIRWAY PLATFORM ON CORROSION RESISTANT TERMINALS, (PHOENIX CONTACT UT SERIES OR APPROVED EQUAL). NEW CONDUITS BETWEEN THIS JUNCTION BOX AND CLARIFIER CONTROL PANEL SHALL BE INSTALLED WITH NEW CLARIFIER EQUIPMENT.

TO ARRANGE FOR LINES TO BE TURNED OFF OR MOVED, CALL CENTERPOINT AT 713-207-7777.

PRIVATE UTILITY LINES SHOWN

AT LEAST 48 HOURS BEFORE EXCAVATING IN STREET R.O.W. OR EASEMENTS CALL THE LONE STAR NOTIFICATION 713-223-4567.

N/A Date:
CenterPoint Energy/Electric Facilities
(Approved only for crossing underground ductlines, unless otherwise noted.) Valid at time of review only.

N/A Date:
SBC Approved for underground conduit facilites only. Signature valid for one year.

N/A Date:
CenterPoint Energy/Gas Facilities
(Gas service lines are not shown)

No.	Date	Revisions	App.

STATE OF TEXAS
MICHAEL H. MOGLEY
40433
LICENSED PROFESSIONAL ENGINEER
9-20-11

KGI Kalluri Group, Inc.
Consulting Engineers & Project Managers
TBPE Registration No. F-665
10497 Town & Country Way, Suite 220
Houston, Texas 77024
Phone: (713)-365-9286

Binkley & Barfield, Inc
consulting engineers
Texas Registration Number F-257
1710 Seamist Drive
Houston, Texas 77008-3189
(713) 869-3433

SURVEYED BY: AMANI ENG. | FIELD BOOK NO. : P-5486

CITY OF HOUSTON
DEPARTMENT OF PUBLIC WORKS AND ENGINEERING

ALMEDA SIMS WWTP & SPF IMPROVEMENTS PACKAGE II

ELECTRICAL DETAILS & ONE-LINE DIAGRAM

ELECTRICAL

FILE NO:	–
WBS: R-000298-0005-4	
DRAWING SCALE	N.T.S.
CITY OF HOUSTON PM	IRAJ RANJBAR, P.E.
DWG NO. :	E-202
SHEET NO.	104 OF 147

PUBLIC WORKS AND ENGINEERING
ACCEPTED & FILED
49061
CITY DRAWING NUMBER
HOUSTON, TEXAS

WARNING
0 1
IF THIS BAR DOES NOT MEASURE 1" THEN DRAWING IS NOT TO SCALE

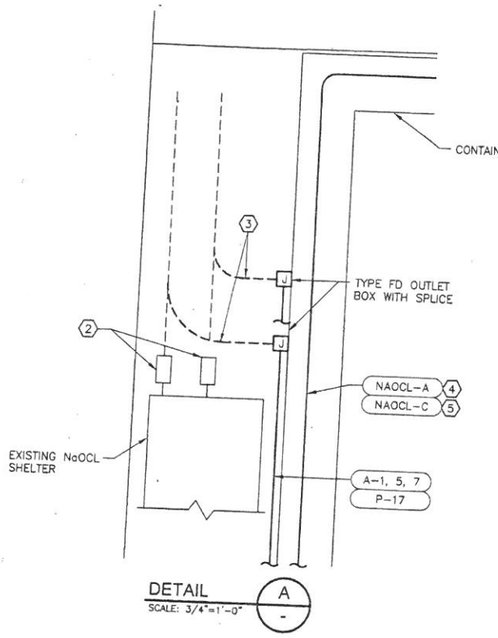

DETAIL A
SCALE: 3/4"=1'-0"

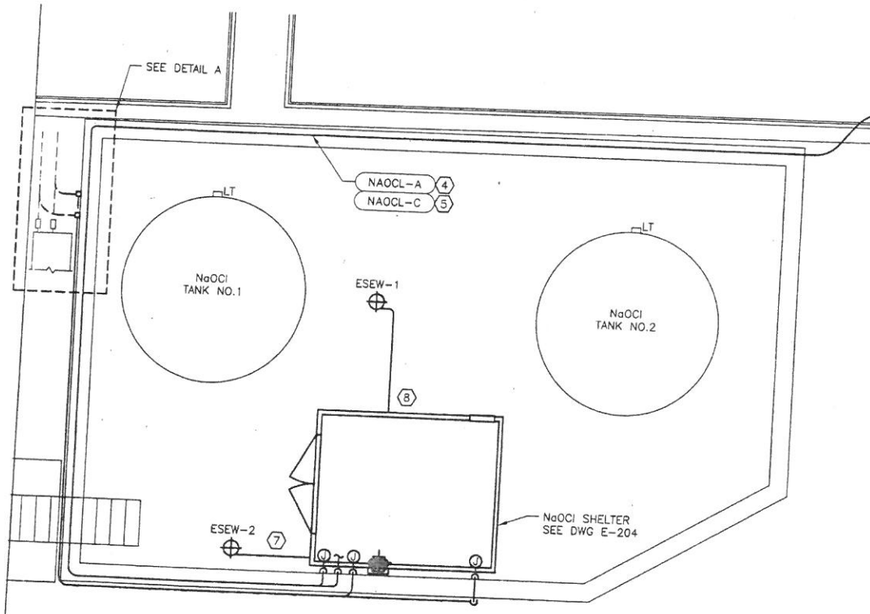

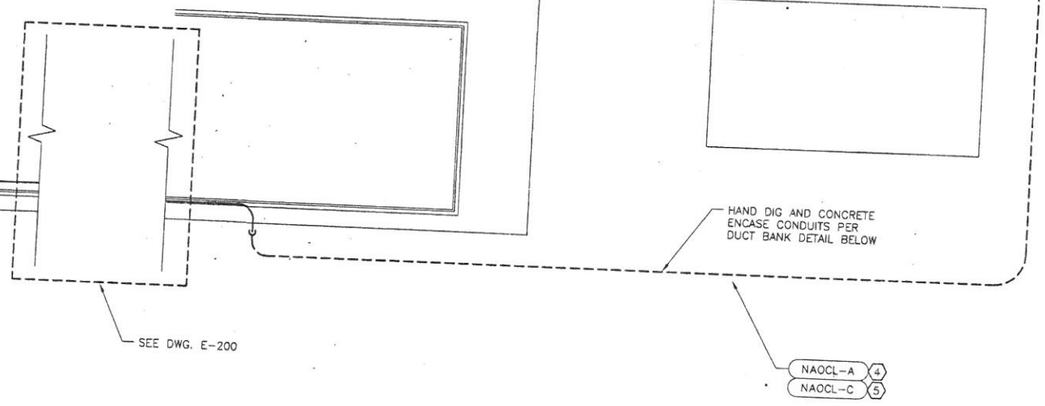

NaOCL AREA ENLARGED ELECTRICAL PLAN
1/4"=1'-0"

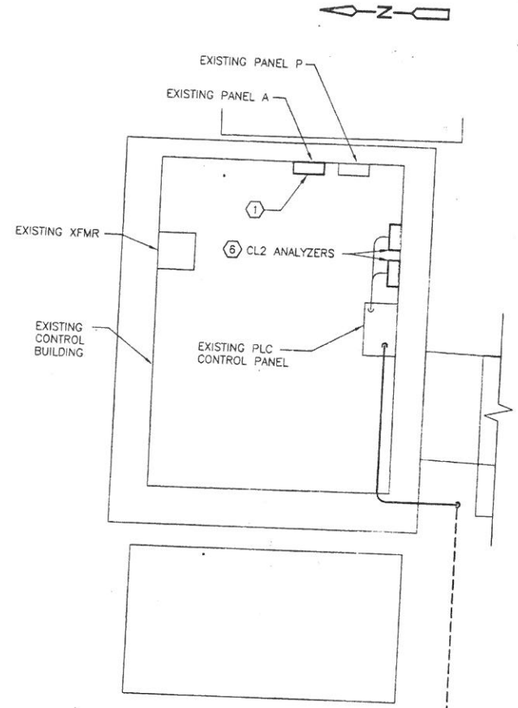

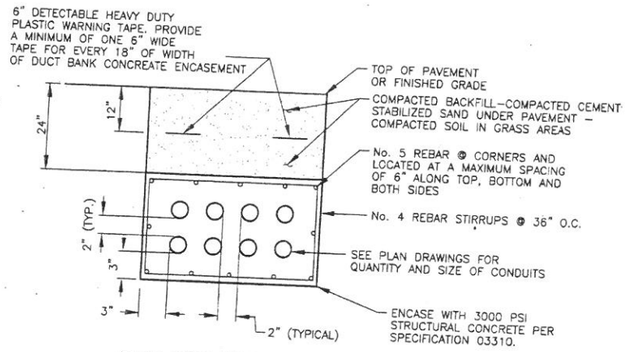

DUCT BANK INSTALLATION

NOTES:

1. REPLACE EXISTING PANELBOARD "A" WITH NEW 20 CKT MINIMUM PANELBOARD. SEE DWG. E-205.
2. REMOVE TYPE LB CONDULETS.
3. ROUTE EXISTING CONDUITS AND CONDUCTORS TO NEW TYPE FD BOX.
4. 8-2/C#16TSP, 2"C
5. 10 #12, #12 GND, 1"C.
6. DISCONNECT POWER AND SIGNAL CONDUITS AND CABLES TO EXISTING UNITS. CONNECT POWER AND SIGNAL CONDUITS AND CABLES TO NEW UNITS. IF EXISTING CONDUITS AND CABLES ARE TOO SHORT TO CONNECT TO NEW UNITS, REPLACE CONDUITS AND CABLES WITH SAME CHARACTERISTICS AS EXISTING.
7. ROUTE POWER AND CONTROL CONDUIT ALONG CONTAINMENT WALL WITH WATER PIPING TO EMERGENCY WASH STATION, UTILIZING 316 S.S. STRUT, ANCHORS AND HARDWARE.
8. ROUTE POWER AND CONTROL CONDUIT WITH WATER PIPING, UTILIZING 316 S.S. STRUT, ANCHORS AND HARDWARE.

TO ARRANGE FOR LINES TO BE TURNED OFF OR MOVED, CALL CENTERPOINT AT 713-207-7777.

PRIVATE UTILITY LINES SHOWN
AT LEAST 48 HOURS BEFORE EXCAVATING IN STREET R.O.W. OR EASEMENTS CALL THE LONE STAR NOTIFICATION 713-223-4567.

N/A Date:
CenterPoint Energy/Electric Facilities
(Approval only for crossing underground ductlines, unless otherwise noted.)
Valid at time of review only.

N/A Date:
SBC Approved for underground conduit facilites only.
Signature valid for one year.

N/A Date:
CenterPoint Energy/Gas Facilities
(Gas service lines are not shown)

No	Date	Revisions	App

STATE OF TEXAS
MICHAEL R. MOSLEY
40433
LICENSED PROFESSIONAL ENGINEER
9-20-11

KGI Kalluri Group, Inc.
Consulting Engineers & Project Management
TBPE Registration No. F-645
10497 Town & Country Way, Suite 260
Houston, Texas 77024
Phone: (713)-365-9288

Binkley & Barfield, Inc
consulting engineers
Texas Registration Number F-257
1710 Seamist Drive
Houston, Texas 77008-3189
(713) 899-3433

SURVEYED BY: AMANI ENG. | FIELD BOOK NO. : P-5486

CITY OF HOUSTON
DEPARTMENT OF PUBLIC WORKS AND ENGINEERING

ALMEDA SIMS WWTP & SPF IMPROVEMENTS PACKAGE II

NaOCl AREA ENLARGED PLAN
ELECTRICAL

FILE NO:	-
WBS: R-000298-0005-4	
DRAWING SCALE	AS SHOWN
CITY OF HOUSTON PM	IRAJ RANJBAR, P.E.
DWG NO. :	E-203
SHEET NO. 105 OF 147	

PUBLIC WORKS AND ENGINEERING
ACCEPTED & FILED
49061
CITY DRAWING NUMBER
HOUSTON, TEXAS

WARNING
0 1
IF THIS BAR DOES NOT MEASURE 1" THEN DRAWING IS NOT TO SCALE

USE SCHEDULE 80 PVC CONDUITS, BOXES AND FITTINGS IN NaOCL BUILDING

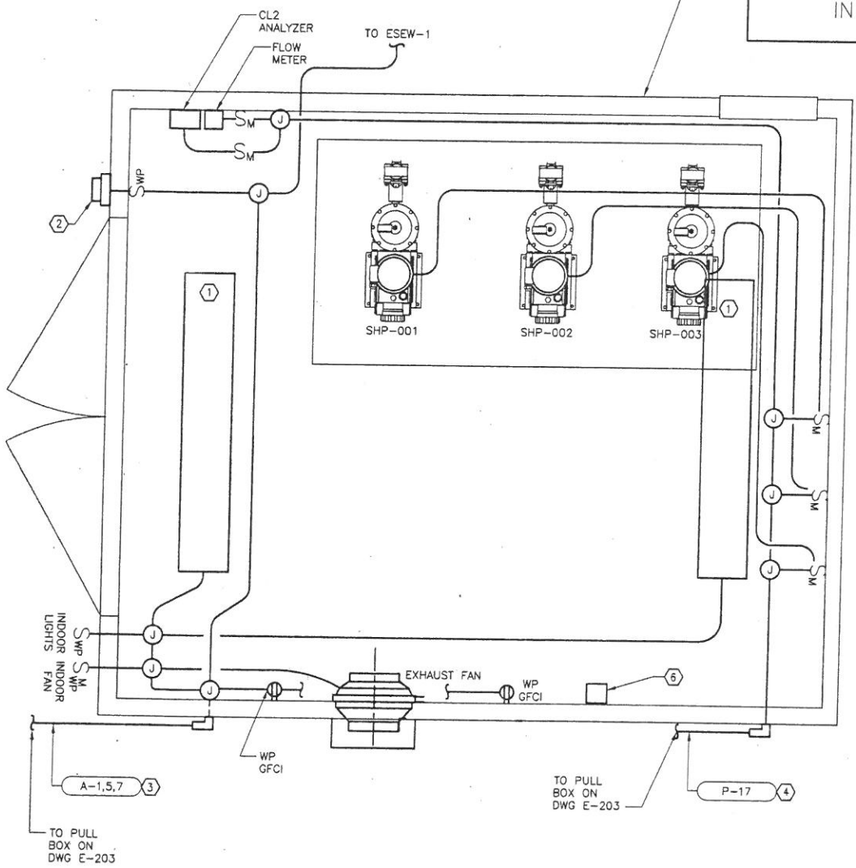

NaOCl SHELTER LIGHTING AND POWER PLAN
1"=1'-0"

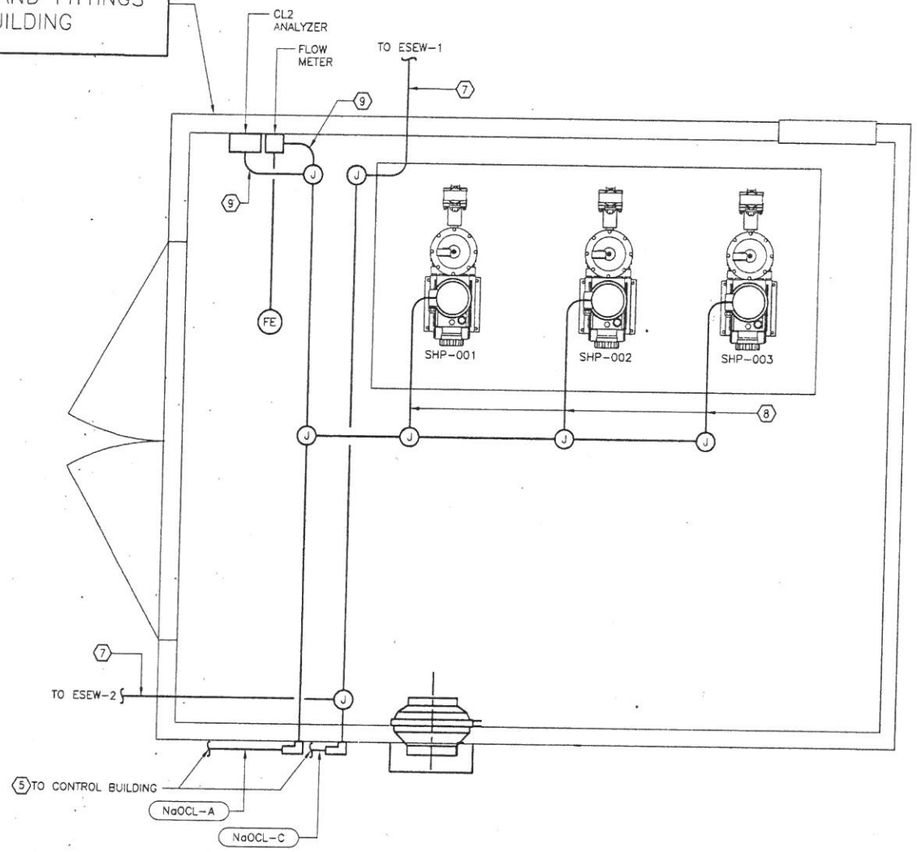

NaOCl BUILDING INSTRUMENT PLAN
1"=1'-0"

PROVIDE CONDUITS, WIRING AND APPURTENANCES TO CONNECT ALL METERING PUMPS, DEVICES AND INSTRUMENTS ADDRESSED IN SPECIFICATIONS AND INDICATED ON BID DOCUMENT DRAWINGS. COORDINATE WITH THE METERING PUMP SKID VENDORS DURING THE BID PERIOD AND PROVIDE ALL MATERIALS, LABOR AND SUPERVISION REQUIRED FOR A COMPLETE WORKING SYSTEM.

NOTES:

1. ENCLOSED FIBERGLASS LIGHTING FIXTURE LITHONIA NO DMW-2-32-AR-120-GEB10RS.
2. METAL HALIDE MICROWALL PACK WITH PE CELL, LITHONIA NO. TWS-50M-120-PE-LPI.
3. PANELBOARD "A" CIRCUIT NUMBERS.
4. PANELBOARD "P" CIRCUIT NUMBER.
5. ROUTE TO PLC IN CONTROL BUILDING.
6. PROVIDE A PORTABLE ELECTRIC HEATER, DAYTON MODEL 3VU33.
7. CONNECT EACH ESEW FLOW SWITCH TO A SPARE PLC DISCRETE INPUT, MODIFY PLANT HMI.
8. 1-2/C#16TSP, 3/4"C.

TO ARRANGE FOR LINES TO BE TURNED OFF OR MOVED, CALL CENTERPOINT AT 713-207-7777.

PRIVATE UTILITY LINES SHOWN
AT LEAST 48 HOURS BEFORE EXCAVATING IN STREET R.O.W. OR EASEMENTS CALL THE LONE STAR NOTIFICATION 713-223-4567.

N/A Date:
CenterPoint Energy/Electric Facilities
(Approval only for crossing underground ductlines, unless otherwise noted.)
Valid at time of review only.

N/A Date:
SBC Approved for underground conduit facilities only.
Signature valid for one year.

N/A Date:
CenterPoint Energy/Gas Facilities
(Gas service lines are not shown)

No.	Date	Revisions	App.

STATE OF TEXAS
MICHAEL H. WOOLEY
40433
LICENSED PROFESSIONAL ENGINEER
9-20-11

KGI Kalluri Group, Inc.
Consulting Engineers & Project Managers
TBPE Registration No. F-665
10497 Town & Country Way, Suite 220
Houston, Texas 77024
Phone: (713)-365-9288

Binkley & Barfield, Inc
consulting engineers
Texas Registration Number F-257
1710 Seamist Drive
Houston, Texas 77008-3189
(713) 869-3433

SURVEYED BY: AMANI ENG. | FIELD BOOK NO. : P-5486

CITY OF HOUSTON
DEPARTMENT OF PUBLIC WORKS AND ENGINEERING

ALMEDA SIMS WWTP & SPF IMPROVEMENTS PACKAGE II

NaOCl BUILDING PLAN
ELECTRICAL

FILE NO:	-
WBS: R-000298-0005-4	
DRAWING SCALE	AS SHOWN
CITY OF HOUSTON PM	IRAJ RANJBAR, P.E.
DWG NO. :	E-204
SHEET NO.	106 OF 147

PUBLIC WORKS AND ENGINEERING
ACCEPTED & FILED
49061
CITY DRAWING NUMBER
HOUSTON, TEXAS

WARNING
0 1
IF THIS BAR DOES NOT MEASURE 1" THEN DRAWING IS NOT TO SCALE

NOTES:

(1) REPLACE EXISTING PANEL "A" WITH NEW LIGHTING PANEL AND RECONNECT EXISTING CIRCUITS. PROVIDE 1-POLE 20A CIRCUIT BREAKERS IN ALL BREAKER POSITIONS.

PANEL "A" (EXISTING TO BE REPLACED)

BUS AMPS 100 MLO ✓
MAIN BRKR. AMPS 100 WIRE SIZE ____
VOLTS 240/120 AIC 10,000
PHASE 1 WIRE 3 SN ✓

NOTES
1. BREAKERS 1P/20A UNLESS MARKED OTHERWISE
2. ADJ. CKTS. TO BAL. PNL.
3. SURFACE MOUNT, NEMA 1

CKT. DESCRIPTION	WIRE	LOAD	BKR.	A	B		BKR.	LOAD	WIRE	CKT. DESCRIPTION
(2) EF, RECEPTACLE AND LTG.			20	1		2	20			ELECTRICAL BUILDING A/C
			20	3		4	20			
CL2 BUILDING-3			20	5		6	20			
NaOCl BUILDING			20	7		8	20			
			20	9		10	20			
			20	11		12	20			
			20	13		14	20			
			20	15		16	20			
			20	17		18	20			
			20	19		20	20			

N

PANEL REPLACEMENT AND RECONNECTION OF EXISTING LOADS (PANEL "A")

PANEL "D3" (EXISTING)

BUS AMPS 480 MLO ✓
MAIN BRKR. AMPS ____ WIRE SIZE ____
VOLTS 480/277 AIC ____
PHASE 3 WIRE 4 SN ✓

NOTES
1. BREAKERS 1P/20A UNLESS MARKED OTHERWISE
2. ADJ. CKTS. TO BAL. PNL.
3. SURFACE MOUNT, NEMA 1

CKT. DESCRIPTION	WIRE	LOAD	BKR.	A	B	C		BKR.	LOAD	WIRE	CKT. DESCRIPTION
CLARIFIER 1&2			30	1			2	20			
			30	3			4	20			
			30	5			6	20			
CLARIFIER 3&4			30	7			8	20			
			30	9			10	20			
			30	11			12	20			
			30	13			14	70			TRANSFORMER FOR DL
			30	15			16	70			TRANSFORMER FOR DL
			30	17			18				

N

RECONNECTION OF EXISTING LOADS (PANEL "D3")

PANEL "DL" (EXISTING)

BUS AMPS 125 MLO ____
MAIN BRKR. AMPS 100 WIRE SIZE 2
VOLTS 240/120 AIC 10,000
PHASE 1 WIRE 3 SN ✓

NOTES
1. BREAKERS 1P/20A UNLESS MARKED OTHERWISE
2. ADJ. CKTS. TO BAL. PNL.
3. SURFACE MOUNT, NEMA 1

CKT. DESCRIPTION	WIRE	LOAD	BKR.	A	C	BKR.	LOAD	WIRE	CKT. DESCRIPTION
FT570A			20	1	2	20			FT730
FT570B			20	3	4	20			
FT570C			20	5	6	20			FLUID STRAINER CONTROL
FT570D			20	7	8	20			SUMP PUMP RECEPTACLE
FT560B			20	9	10	20			MCC2
FP550B			20	11	12	20			
FP560A			20	13	14	20			NON POTABLE WATER
FP550A			20	15	16	20			FIT750 NON POTABLE WATER
FIT560E			20	17	18	20			HYDRO RANGER
FP500			20	19	20	20			
			20	21	22	20			
			20	23	24	20			LIGHTING CONTACTOR
			20	25	26	20			PHOTO CELL
			20	27	28	20			CLARIFIER 1&2 LIGHTING
			20	29	30	20			CLARIFIER 3&4 LIGHTING
			60	31	32	20			CLARIFIER 1&2 RECEPTACLE
EXISTING DECLOR PLANT			60	33	34	20			CLARIFIER 3&4 RECEPTACLE
				35	36	20			
				37	38	20			ELECTRICAL BUILDING
				39	40	20			AIR CONDITIONING
				41	42	20			

N

RECONNECTION OF EXISTING LOADS (PANEL "DL")

PANEL "P" (EXISTING)

BUS AMPS 100 MLO ✓
MAIN BRKR. AMPS ____ WIRE SIZE 2
VOLTS 240/120 AIC 10,000
PHASE 1 WIRE 3 SN ✓

NOTES
1. BREAKERS 1P/20A UNLESS MARKED OTHERWISE
2. ADJ. CKTS. TO BAL. PNL.
3. SURFACE MOUNT, NEMA 1

CKT. DESCRIPTION	WIRE	LOAD	BKR.	A	B	C		BKR.	LOAD	WIRE	CKT. DESCRIPTION
CONTROL PANEL			20	1			2	20			NaHSO3 METERING PUMPS
FLOW METER			20	3			4	20			HEATER AND PIPEHEAT TRAIL
CONTROL BLDG AIR CONDITION			20	5			6	20			NaHSO3 AREA HEAT TRACING
CONTROL BLDG AIR CONDITION			20	7			8	20			NaHSO3 AREA HEAT TRACING
CL2 ANALYZERS			20	9			10	20			SODIUM
CHLORINATION POINT PUMP			20	11			12	20			SPARE
PRE CHLORINATION P. PUMP			20	13			14	20			
PRE CL2 PUMP 2			20	15			16	20			
NaOCl SYSTEM			20	17			18	20			
SPARE			20	19			20	20			SPARE

N

RECONNECTION OF EXISTING LOADS (PANEL "P")

TO ARRANGE FOR LINES TO BE TURNED OFF OR MOVED, CALL CENTERPOINT AT 713-207-7777.

PRIVATE UTILITY LINES SHOWN
AT LEAST 48 HOURS BEFORE EXCAVATING IN STREET R.O.W. OR EASEMENTS CALL THE LONE STAR NOTIFICATION 713-223-4567.

N/A Date:
CenterPoint Energy/Electric Facilities
(Approved only for crossing underground ductlines, unless otherwise noted.) Valid at time of review only.

N/A Date:
SBC Approved for underground conduit facilites only. Signature valid for one year.

N/A Date:
CenterPoint Energy/Gas Facilities
(Gas service lines are not shown)

No.	Date	Revisions	App.

STATE OF TEXAS
MICHAEL H. WOOLEY
40433
LICENSED PROFESSIONAL ENGINEER
9-20-11

KGI Kalluri Group, Inc.
Consulting Engineers & Project Managers
TBPE Registration No. F-565
10497 Town & Country Way, Suite 220
Houston, Texas 77024
Phone: (713)-365-9288

Binkley & Barfield, Inc
consulting engineers
Texas Registration Number F-257
1710 Seamist Drive
Houston, Texas 77008-3189
(713) 869-3433

SURVEYED BY: AMANI ENG. FIELD BOOK NO. : P-5485

CITY OF HOUSTON
DEPARTMENT OF PUBLIC WORKS AND ENGINEERING

ALMEDA SIMS WWTP & SPF IMPROVEMENTS PACKAGE II

PANELBOARD SCHEDULES

ELECTRICAL

FILE NO: -
WBS: R-000298-0005-4
DRAWING SCALE
N.T.S.
CITY OF HOUSTON PM
IRAJ RANJBAR, P.E.
DWG NO. : E-205
SHEET NO. 107 OF 147

PUBLIC WORKS AND ENGINEERING ACCEPTED & FILED 49061 CITY DRAWING NUMBER HOUSTON, TEXAS

WARNING
0 1
IF THIS BAR DOES NOT MEASURE 1" THEN DRAWING IS NOT TO SCALE

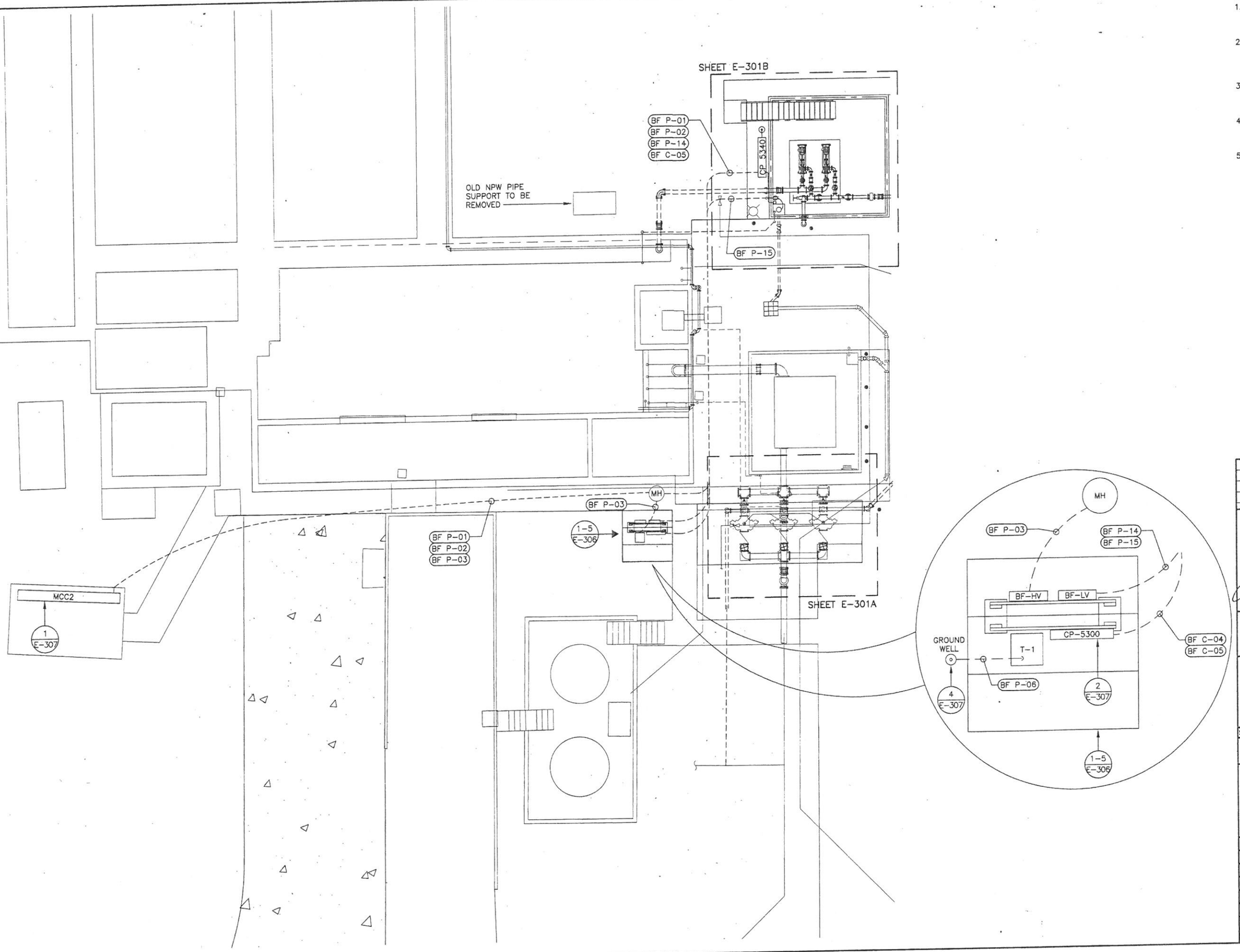

NOTES:

1. CONDUIT ROUTING IS SCHEMATIC IN NATURE AND SHALL BE ADJUSTED FOR FIELD CONDITIONS.
2. CONTRACTOR SHALL SAW CUT AND REMOVE CONCRETE TO INSTALL CONDUITS BELOW GRADE WHERE INDICATED.
3. CONTRACTOR SHALL HAND DIG TO AVOID DAMAGE TO EXISTING UNDERGROUND UTILITIES
4. CONTRACTOR SHALL RESTORE THE CONCRETE UPON COMPLETION OF THE UNDERGROUND WORK.
5. CONTRACTOR SHALL IDENTIFY, CLEAN OUT AND RE-USE EXISTING CONDUITS BETWEEN MCC 2 AND MANHOLE MH.

No.	Date	Revisions	App.

STATE OF TEXAS
LARRY M. BARFIELD
39337
REGISTERED PROFESSIONAL ENGINEER

Binkley & Barfield, Inc
consulting engineers
Texas Registration Number F-257
1710 Seamist Drive
Houston, Texas 77008-3189
(713) 889-3433

SURVEYED BY: AMANI ENG. | FIELD BOOK NO. : P-5486

CITY OF HOUSTON
DEPARTMENT OF PUBLIC WORKS AND ENGINEERING

ALMEDA SIMS WWTP & SPF IMPROVEMENTS PACKAGE II

ELECTRICAL SITE PLAN NPW AREA

FILE NO:	-
WBS:	R-000298-0005-4
DRAWING SCALE	1/8"=1'
CITY OF HOUSTON PM	IRAJ RANJBAR, P.E.
DWG NO. :	E-300
SHEET NO.	108 OF 147

ACCEPTED & FILED
49061
CITY DRAWING NUMBER

G:\115805 Almeda Sims Package II\Cadd Dwgs\E-300 Elec Site Plan.dwg Jan. 10,2012 - 11:56am rpd

COLOR TABLE:

ORIGINAL SCALE IN INCHES FOR REDUCED PLANS
0 1 2 3

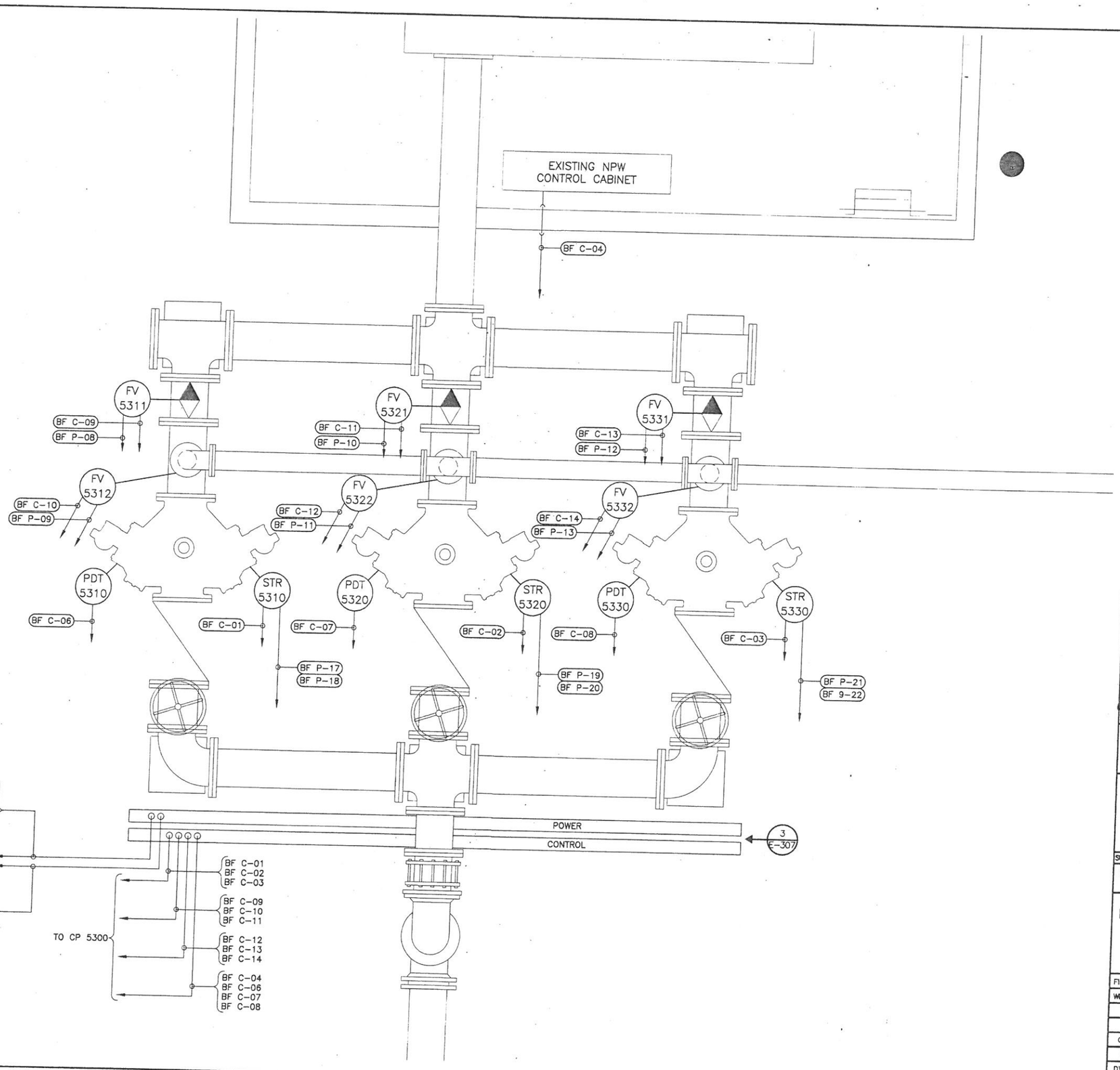

NOTES:

1. ROUTE CONDUITS BF P-XX TO POWER WIREWAY
2. ROUTE CONDUITS BF C-XX TO CONTROL WIREWAY

No	Date	Revisions	App.

STATE OF TEXAS
LARRY M. BARFIELD
39337
REGISTERED
PROFESSIONAL ENGINEER
9-21-11

Binkley & Barfield, Inc
consulting engineers
Texas Registration Number F-257
1710 Seamist Drive
Houston, Texas 77008-3189
(713) 868-3433

SURVEYED BY: AMANI ENG. | FIELD BOOK NO. : P-5486

CITY OF HOUSTON
DEPARTMENT OF PUBLIC WORKS AND ENGINEERING

ALMEDA SIMS WWTP & SPF IMPROVEMENTS PACKAGE II

ELECTRICAL SITE PLAN NPW STRAINER AREA

FILE NO:	–
WBS: R-000298-0005-4	
DRAWING SCALE	1"=10'
CITY OF HOUSTON PM	IRAJ RANJBAR, P.E.
DWG NO. :	E-301A
SHEET NO. 109 OF 147	

PUBLIC WORKS AND ENGINEERING
ACCEPTED & FILED
49061
CITY DRAWING NUMBER
HOUSTON, TEXAS

G:\115805 Almeda Sims Package II\Cadd Dwgs\E-301A Electrical Site Plan NPW Strainer Area.dwg Sep 21,2011 -- 8:06am RPD
COLOR TABLE:
ORIGINAL SCALE IN INCHES
FOR REDUCED PLANS
0 1 2 3

G:\115805 Almeda Sims Package II\Could Dwgs\E-301B Enlarged Elec Site Plan.dwg Sep 21,2011 - 8:09am RPD

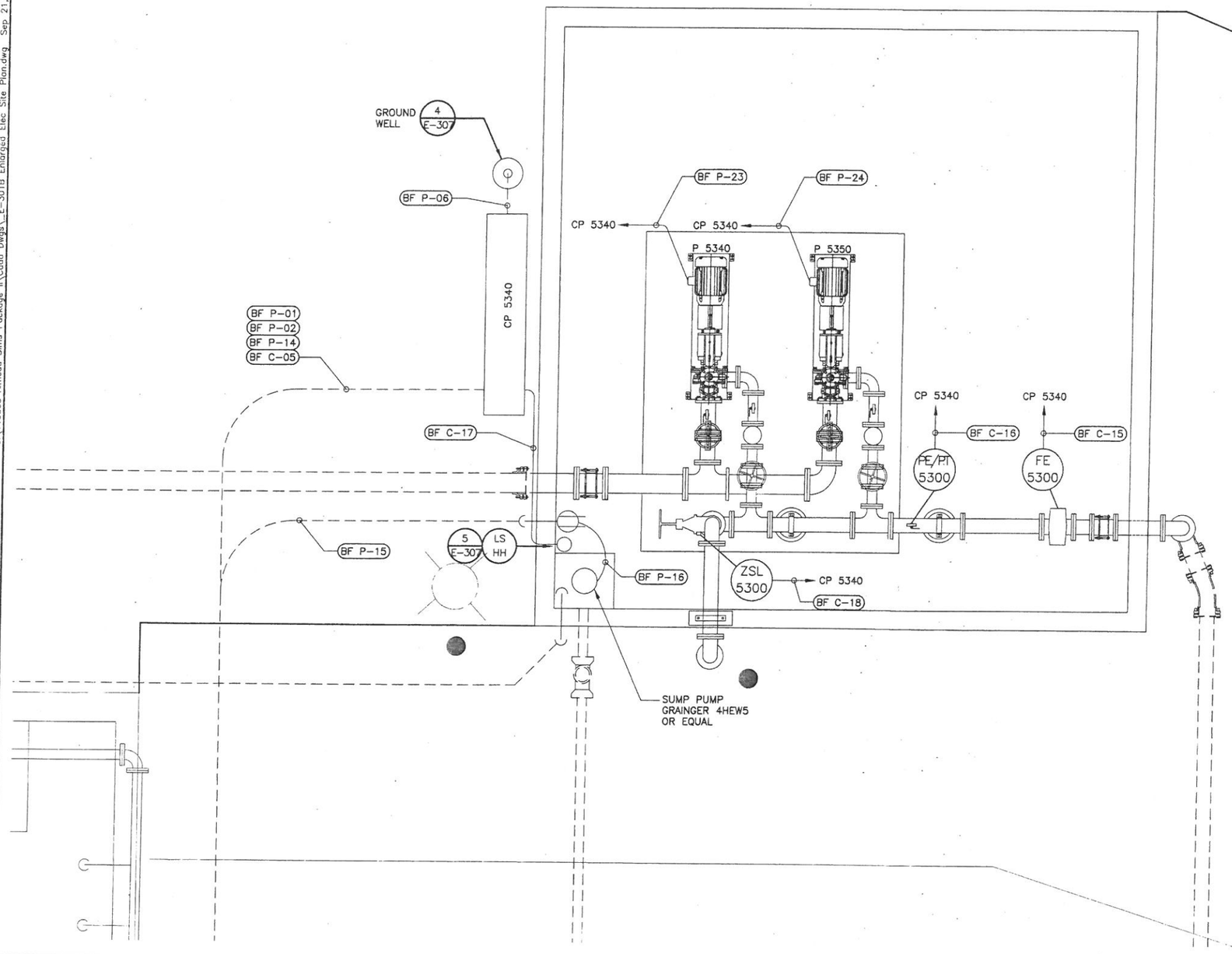

COLOR TABLE:

ORIGINAL SCALE IN INCHES FOR REDUCED PLANS
0 1 2 3

No.	Date	Revisions	App.

STATE OF TEXAS
LARRY M. BARFIELD
39337
REGISTERED PROFESSIONAL ENGINEER
9-21-11

Binkley & Barfield, Inc
consulting engineers
Texas Registration Number F-257
1710 Seamist Drive
Houston, Texas 77008-3189
(713) 869-3433

SURVEYED BY: AMANI ENG. | FIELD BOOK NO. : P-5486

CITY OF HOUSTON
DEPARTMENT OF PUBLIC WORKS AND ENGINEERING

ALMEDA SIMS WWTP & SPF IMPROVEMENTS PACKAGE II

ELECTRICAL SITE PLAN
BACK FLUSH PUMP AREA

FILE NO:	–
WBS: R-000298-0005-4	
DRAWING SCALE	1/2"=1'
CITY OF HOUSTON PM	IRAJ RANJBAR, P.E.
DWG NO. :	E-301B
SHEET NO. 110 OF 147	

PUBLIC WORKS AND ENGINEERING
ACCEPTED & FILED
49061
CITY DRAWING NUMBER
HOUSTON, TEXAS

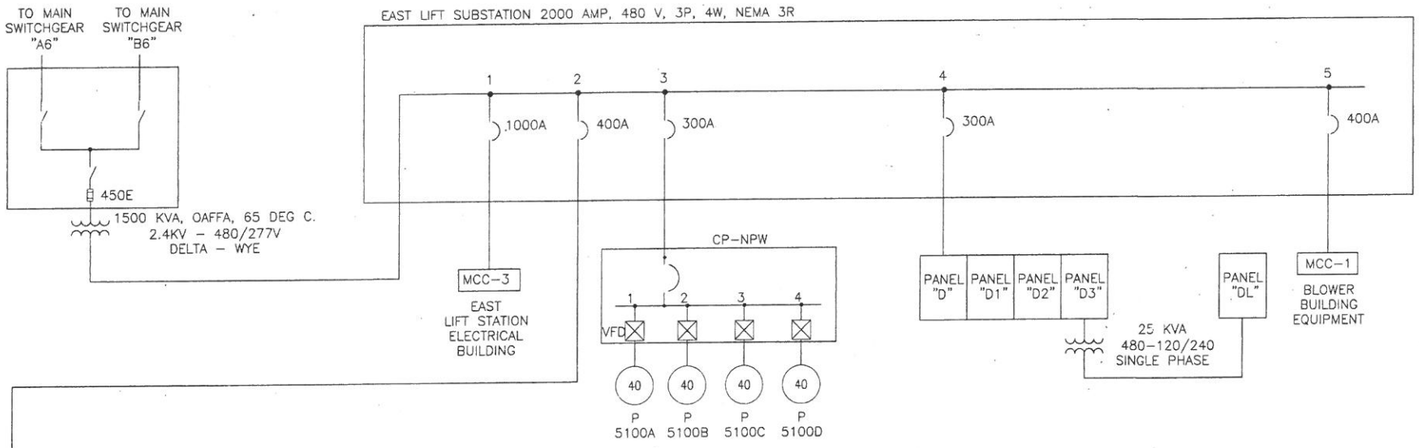

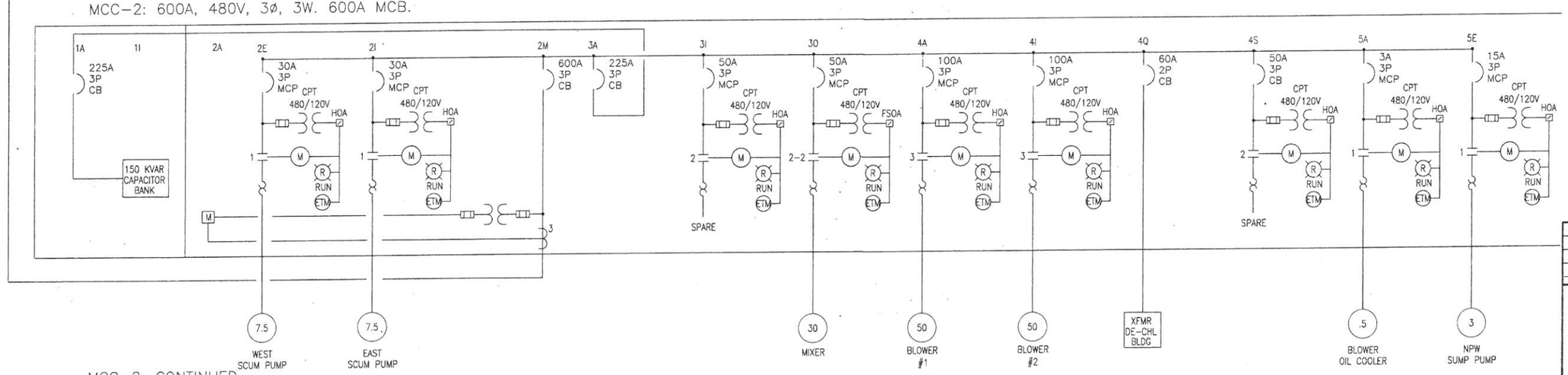

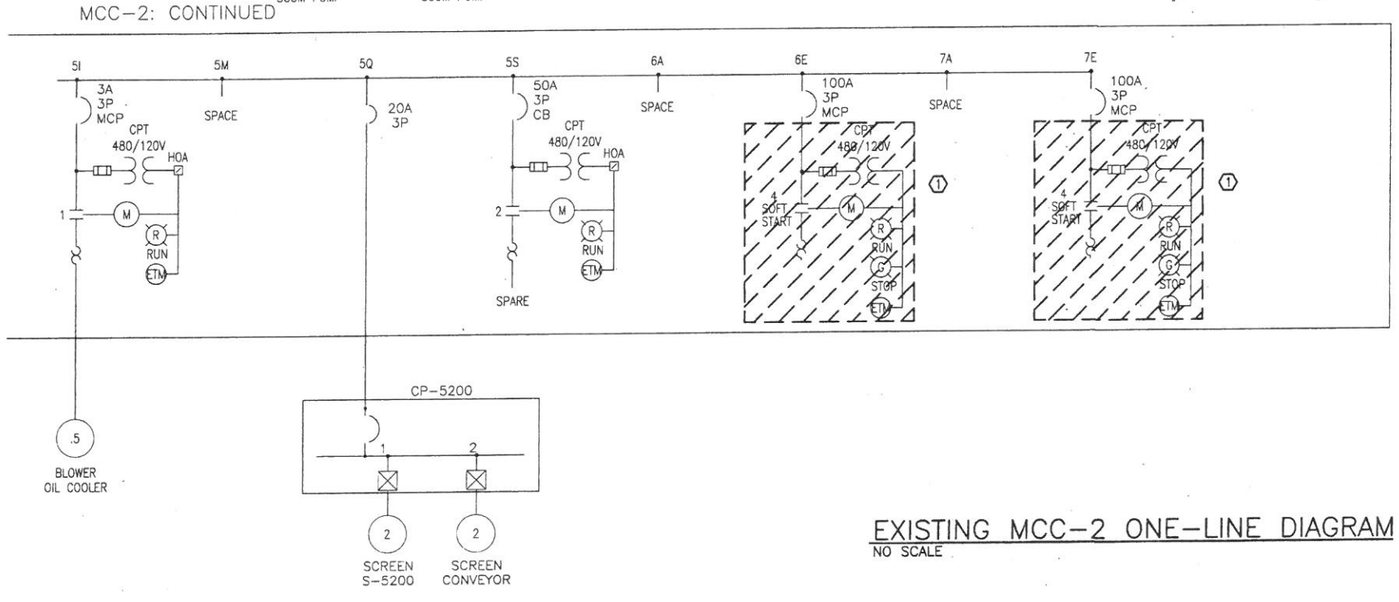

EXISTING MCC–2 ONE–LINE DIAGRAM
NO SCALE

PACKAGE II

KEYED NOTES:

(1) REMOVE EXISTING SOFT START MOTOR STARTERS FROM EXISTING BUCKETS. LEAVE MCP CIRCUIT BREAKEERS AND BUCKETS INTACT FOR REUSE. SEE DWG E–303.

LEGEND:

EQUIPMENT TO BE REMOVED (1)

No	Date	Revisions	App.

STATE OF TEXAS
LARRY W. BARFIELD
39337
REGISTERED PROFESSIONAL ENGINEER
9-21-11

Binkley & Barfield, Inc
consulting engineers
Texas Registration Number F-257
1710 Seamist Drive
Houston, Texas 77008-3189
(713) 869-3433

SURVEYED BY: AMANI ENG. | FIELD BOOK NO. : P–5486

CITY OF HOUSTON
DEPARTMENT OF PUBLIC WORKS AND ENGINEERING

ALMEDA SIMS WWTP & SPF IMPROVEMENTS PACKAGE II

MCC-2 REVISIONS DEMOLITION

FILE NO:	–
WBS: R–000298–0005–4	
DRAWING SCALE	
NO SCALE	
CITY OF HOUSTON PM	
IRAJ RANJBAR, P.E.	
DWG NO. :	E–302
SHEET NO.	111 OF 147

ACCEPTED & FILED
49061
CITY DRAWING NUMBER
HOUSTON, TEXAS

G:\115805 Almeda Sims Package II\Cadd Dwgs\E–302 MCC 2 One–Line Dia Demo.dwg Sep 21,2011 – 8:17am RPD

COLOR TABLE:

PLOT SCALE: SWPH: SYMBOL ID:

ORIGINAL SCALE IN INCHES FOR REDUCED PLANS

0 1 2 3

G141577

G:\115805 Almeda Sims Package II\Cadd Dwgs\E-303 Prop MCC 2 Revisions One-Line Dia.dwg Sep 21,2011 - 8:19am RPD

COLOR TABLE:

ORIGINAL SCALE IN INCHES FOR REDUCED PLANS
0 1 2 3

TO MAIN SWITCHGEAR "A6"

TO MAIN SWITCHGEAR "B6"

450E

1500 KVA, OAFFA, 65 DEG C.
. 2.4KV – 480/277V
DELTA – WYE

EAST LIFT SUBSTATION 2000 AMP, 480 V, 3P, 4W, NEMA 3R

1 — 1000A — MCC-3 — EAST LIFT STATION ELEC BLDG

2 — 400A

3 — ② 300A — FSUB-3

CP-NPW
1 2 3 4
VFD
40 40 40 40
P 5100A P 5100B P 5100C P 5100D

4 — 300A
PANEL "D" | PANEL "D1" | PANEL "D2" | PANEL "D3"
25 KVA 480–120/240 SINGLE PHASE

5 — 400A
PANEL "DL" — MCC-1 — AERATION BLOWER BLDG

PACKAGE II

KEYED NOTES:-

1. INSTALL NEW FEEDER CIRCUIT WIRING FROM EACH 100 AMP MCP TO PUMP CONTROL CABINET CP 5340.
2. INSTALL NEW 50 AMP THERMOMAGNETIC CIRCUIT BREAKER AND INSTALL FEEDER CIRCUIT WIRING TO PROPOSED CIRCUIT BREAKER PANEL 'BF-HV'.
3. SKID MOUNTED PUMP ASSEMBLY.
4. 10' X ¾" COPPER CLAD GROUND ROD INSTALLED IN GROUND WELL. SEE DRAWING E-307, DETAIL 4.
5. NEMA L-6, 250 VOLT, 20 AMP, 2 WIRE WITH GROUND, TWIST LOCK RECEPTACLE WITH NEMA 3R RATED HINGED RECEPTACLE COVER. COVER SHALL PROVIDE 3R PROTECTION WITH CORD/PLUG INSERTED.

MCC-2: 600A, 480V, 3ø, 3W. 600A. MCB.

1A 225A 3P CB — 150 KVAR CAPACITOR BANK

1I — 225A 3P CB

2A — 600A 3P CB

2E — 30A 3P MCP CPT 480/120V HOA — 1 — M — R RUN ETM — 7.5 — WEST SCUM PUMP

2I — 30A 3P MCP CPT 480/120V HOA — 1 — M — R RUN ETM — 7.5 — EAST SCUM PUMP

2M — 600A 3P CB — M — 3

3A — 225A 3P CB

3I — 50A 3P MCP CPT 480/120V HOA — 2 — M — R RUN ETM — SPARE

3O — 50A 3P MCP CPT 480/120V FSOA — 2 — M — R RUN ETM — 30 — MIXER

4A — 100A 3P MCP CPT 480/120V HOA — 3 — M — R RUN ETM — 50 — BLOWER #1

4I — 100A 3P MCP CPT 480/120V HOA — 3 — M — R RUN ETM — 50 — BLOWER #2

4Q — 60A 2P CB — XFMR DE-CHL BLDG

4S — 50A 3P CB CPT 480/120V HOA — 2 — M — R RUN ETM — SPARE

5A — 3A 3P MCP CPT 480/120V HOA — 1 — M — R RUN ETM — .5 — BLOWER OIL COOLER

5E — 15A 3P MCP CPT 480/120V HOA — 1 — M — R RUN ETM — 3 — NPW SUMP PUMP

MCC-2: CONTINUED

5I — 3A 3P MCP CPT 480/120V HOA — 1 — M — R RUN ETM — .5 — BLOWER OIL COOLER

5M — ② 50A 3P — M — 3

5Q — 20A 3P — CP-5200 — 1 2 — 2 2 — SCREEN S-5200 — SCREEN CONVEYOR

5S — 50A 3P CB CPT 480/120V HOA — 2 — M — R RUN ETM — SPARE

6A — SPACE

6E — ① 100A 3P MCP — BF P-01 — CP 5340 — VFD 5340 — VFD 5350 — BF P-23 — BF P-24 — 40 — 40 — ③ — BACK FLUSH PUMP P 5340 — BACK FLUSH PUMP P 5350

7A — SPACE

7E — ① 100A 3P MCP — BF P-02 — BF P-03

BF P-03 — BF P-04 — BF-HV 480V DIST PANEL — BF P-08 BF P-10 BF P-12 — BRANCH CIRCUITS TO MOV's PER PANEL SCHEDULE

BF P-04 — BF P-05 — 480V TO 208/120V 15kVA — BF T-1 — BF P-06 — ④

BF P-05 — BF P-07 — BF-LV 208/120V DIST PANEL — BF P-14 — BF P-15 — ⑤ BF P-16 — 2 — BACK FLUSH PUMP PIT SUMP PUMP

BF P-07 — CP 5300 — BACK FLUSH CONTROLS — BF P-17 BF P-19 BF P-21 — BF P-18 BF P-20 BF P-22 — STRAINER ASSEMBLIES

1-5 E-306

EQUIPMENT AIR CONDITIONER

PROPOSED MCC-2 REVISIONS ONE-LINE DIAGRAM

NO SCALE

No.	Date	Revisions	App.

STATE OF TEXAS — LARRY M. BARFIELD 39337 REGISTERED PROFESSIONAL ENGINEER — 10-21-11

Binkley & Barfield, Inc
consulting engineers
Texas Registration Number F-257
1710 Seamist Drive
Houston, Texas 77008-3189
(713) 869-3433

SURVEYED BY: AMANI ENG. — FIELD BOOK NO. : P-5486

CITY OF HOUSTON
DEPARTMENT OF PUBLIC WORKS AND ENGINEERING

ALMEDA SIMS WWTP & SPF IMPROVEMENTS PACKAGE II

PROPOSED MCC-2 REVISIONS ONE-LINE DIAGRAM

FILE NO:	–
WBS: R-000298-0005-4	
DRAWING SCALE	
NO SCALE	
CITY OF HOUSTON PM	
IRAJ RANJBAR, P.E.	
DWG NO. :	E-303
SHEET NO.	112 OF 147

PUBLIC WORKS AND ENGINEERING ACCEPTED & FILED — 49061 CITY DRAWING NUMBER — HOUSTON, TEXAS

ELECTRICAL LOAD ANALYSIS MCC-2 LOCATION: CLARIFIER/EFFLUENT POWER DISTRIBUTION BUILDING			
LOAD DESCRIPTION	CONNECTED LOAD AMPS @ 480/277V	MULT.	NEC LOAD AMPS @ 480/277V
EXISTING			
3 MOTOR @ 1/2 HP	3.3	1.00	3.3
1 MOTOR @ 3 HP	4.8	1.00	4.8
2 MOTORS @ 2 HP	6.8	1.00	6.8
1 MOTORS @ 7.5 HP	22.0	1.00	22.0
2 MOTOR @ 30 HP	40.0	1.00	40.0
2 MOTOR @ 50 HP	130.0	1.00	130.0
1 TRANSFORMER @ 25 KVA	52.1	1.00	52.1
PROPOSED			
2 MOTORS @ 40 HP	**104.0**	**1.00**	**104.0**
2 MOTORS @ 1-1/2 HP	**6.0**	**1.00**	**6.0**
TRANSFORMER T-1 (PANEL 'BF-LV)	**10.8**	**1.00**	**10.8**
SUB TOTAL			**379.8**
25% OF LARGEST MOTOR - 50 HP	65.0	0.25	16.3
	TOTAL NEC LOAD		**396.1**

208/120 VOLT ELECTRICAL LOAD ANALYSIS PANEL 'BF-LV'			
LOAD DESCRIPTION	CONNECTED LOAD AMPS	MULT.	NEC LOAD AMPS
2 HP SUMP PUMP	**8.8**	**1.00**	**8.8**
AIR CONDITIONER	**4.0**	**1.00**	**4.0**
2 X 1/3 HP CLEANING MOTORS	**4.8**	**1.00**	**4.8**
VALVE MOTOR	**0.7**	**1.00**	**0.7**
INSTRUMENTATION	**2.8**	**1.00**	**2.8**
SUBTOTAL			**21.1**
25% OF LARGEST MOTOR - 2 HP	**8.8**	**0.25**	**2.2**
	TOTAL NEC LOAD		**23.3**

ELECTRICAL LOAD ANALYSIS SOUTHEAST SUBSTATION LOCATION: SOUTHEAST OF EAST LIFT STATION			
LOAD DESCRIPTION	CONNECTED LOAD AMPS @ 480/277V	MULT.	NEC LOAD AMPS @ 480/277V
MCC-1 SUBTOTAL	274.9	1.00	274.9
MCC-2 SUBTOTAL	**379.8**	**1.00**	**379.8**
MCC-3 SUBTOTAL	578.1	1.00	578.1
PANELS D, D1, D2, D3, DL SUBTOTAL	174.6	1.00	174.6
NPW SYSTEM	232.9	1.00	232.9
25% OF LARGEST MOTOR - 250 HP	300.0	0.25	75.0
	TOTAL NEC LOAD		**1,715**

1500kVA TRANSFORMER CURRENT AT 480 VOLTS = 1804 AMPS MAXIMUM

NEW AND REVISED LOADS

ELECTRICAL LOAD ANALYSIS 480 VOLT PANELS D, D1, D2, D3, DL LOCATION: CLARIFIER/EFFLUENT POWER DISTRIBUTION BUILDING			
LOAD DESCRIPTION	CONNECTED LOAD AMPS @ 480/277V	MULT.	NEC LOAD AMPS @ 480/277V
PANEL D			
AREA LIGHTING 15,386 VA @ 480 VOLTS	18.5	1.25	23.1
*GATE ACTIVATORS 11 @ 3.2 HP	55.0	0.50	27.5
PANEL D1			
*GATE ACTIVATORS 12 @ 3.2 HP	60.0	0.50	30.0
PANEL D2			
*GATE ACTIVATORS 4 @ 3.2 HP	20.0	0.50	10.0
*GATE ACTIVATORS 4 @ 1.5 HP	12.0	0.50	6.0
PANEL D3			
*GATE ACTIVATORS 2 @ 5 HP	15.2	0.50	7.6
CLARIFIERS 5 @ 1.5 HP	15.0	1.00	15.0
EQUIPMENT BUILDING	3.3	1.00	3.3
PANEL DL via 1 TRANSFORMER @ 25kVA	52.1	1.00	52.1
SUBTOTAL			174.6
25% OF LARGEST MOTOR - 5 HP	7.8	0.25	1.9
	TOTAL NEC LOAD		**176.5**

ELECTRICAL LOAD ANALYSIS MCC-3 LOCATION: EAST LIFT STATION			
LOAD DESCRIPTION	CONNECTED LOAD AMPS @ 480/277V	MULT.	NEC LOAD AMPS @ 480/277V
1 MOTOR @ 1 HP	2.1	1.00	2.1
1 MOTOR @ 50 HP	65.0	1.00	65.0
1 MOTOR @ 150 HP	180.0	1.00	180.0
1 MOTOR @ 250 HP	300.0	1.00	300.0
1 TRANSFORMER @ 15 KVA	31.0	1.00	31.0
SUBTOTAL			578.1
25% OF LARGEST MOTOR - 250 HP	300.0	0.25	75.0
	TOTAL NEC LOAD		**653.1**

HISTORICAL LOADS FROM RECORD DRAWINGS

ELECTRICAL LOAD ANALYSIS MCC-1 LOCATION: MAIN AERATION BLOWER BUILDING			
LOAD DESCRIPTION	CONNECTED LOAD AMPS @ 480/277V	MULT.	NEC LOAD AMPS @ 480/277V
4 MOTORS @ 1/2 HP	4.4	1.00	4.4
1 MOTOR @ 3/4 HP	1.6	1.00	1.6
5 MOTORS @ 1 HP	10.5	1.00	10.5
1 MOTOR @ 2-1/2 HP	4.1	1.00	4.1
2 BAR SCREENS @ 3 HP	9.6	1.00	9.6
1 MOTOR @ 5 HP	7.6	1.00	7.6
3 MOTORS @ 15 HP	63.0	1.00	63.0
2 MOTORS @ 20 HP	54.0	1.00	54.0
2 MOTORS @ 25 HP	68.0	1.00	68.0
1 TRANSFORMER @ 25 KVA	52.1	1.00	52.1
SUBTOTAL			274.9
25% OF LARGEST MOTOR - 25 HP	34.0	0.25	8.5
	TOTAL NEC LOAD		**283.4**

ELECTRICAL LOAD ANALYSIS NPW LOCATION: NPW PUMP SKID			
LOAD DESCRIPTION	CONNECTED LOAD AMPS @ 480/277V	MULT.	NEC LOAD AMPS @ 480/277V
4 MOTOR @ 40 HP	208.0	1.00	208.0
1 MOTOR @ 3 HP	4.8	1.00	4.8
1 TRANSFORMER @ 10 KVA	20.1	1.00	20.1
SUBTOTAL			232.9
25% OF LARGEST MOTOR - 40 HP	52.0	0.25	13.0
	TOTAL NEC LOAD		**245.9**

No.	Date	Revisions	App.

STATE OF TEXAS
LARRY M. BARFIELD
39337
REGISTERED PROFESSIONAL ENGINEER
9-21-11

Binkley & Barfield, Inc
consulting engineers
Texas Registration Number F-257
1710 Seamist Drive
Houston, Texas 77008-3189
(713) 869-3433

SURVEYED BY: AMANI ENG. FIELD BOOK NO. : P-5486

CITY OF HOUSTON
DEPARTMENT OF PUBLIC WORKS AND ENGINEERING

ALMEDA SIMS WWTP & SPF IMPROVEMENTS PACKAGE II

ELECTRICAL LOAD ANALYSES

FILE NO:	–
WBS: R-000298-0005-4	
DRAWING SCALE	
NTS	
CITY OF HOUSTON PM	
IRAJ RANJBAR, P.E.	
DWG NO. :	E-304
SHEET NO. 113 OF 147	

PUBLIC WORKS AND ENGINEERING
ACCEPTED & FILED
49061
CITY DRAWING NUMBER
HOUSTON, TEXAS

G:\115805 Almeda Sims Package II\Cadd Dwgs\E-304 Load Analyses.dwg Sep 21,2011 - 8:23am RPD

COLOR TABLE:

ORIGINAL SCALE IN INCHES FOR REDUCED PLANS
0 1 2 3

PANEL 'BF-HV' PANEL SCHEDULE

480 VOLT, 3 PHASE, 3 WIRE, 125 MLO, 42 KA RMS SYM,

NEMA 4X STAINLESS STEEL CIRCUIT BREAKER PANEL WITH GROUND BAR

DESCRIPTION	LOAD VA	WIRE DATA or TAG #	BKR. SIZE	CKT. NO.	PHASE AMPS A Ø	PHASE AMPS B Ø	PHASE AMPS C Ø	CKT. NO.	BKR. SIZE	WIRE DATA or TAG #	LOAD VA	DESCRIPTION
MOV FV 5311	2,493	3#12 #12 GND (BF P-08)	15 A 3 POLE	1	3.0			2	15 A 3 POLE	3#12 #12 GND (BF P-09)	2,493	MOV FV 5312
				3	3.0	3.0		4				
				5		3.0	3.0	6				
MOV FV 5321	2,493	3#12 #12 GND (BF P-10)	15 A 3 POLE	7	3.0			8	15 A 3 POLE	3#12 #12 GND (BF P-11)	2,493	MOV FV 5322
				9	3.0	3.0		10				
				11		3.0	3.0	12				
MOV FV 5331	2,493	3#12 #12 GND (BF P-12)	15 A 3 POLE	13	3.0			14	15 A 3 POLE	3#12 #12 GND (BF P-13)	2,493	MOV FV 5332
				15		3.0		16				
				17			3.0	18				
TRANSFORMER T-1	8,360	3#10 #10 GND (BF P-04)	25 A 3 POLE	19	0.0 17.4			20				SPARE
				21		0.0 17.4		22				
				23				24				
SPARE				25				26				SPARE
				27				28				
				29				30				
SPARE				31				32				SPARE
				33				34				
				35				36				
SPARE				37				38				SPARE
				39				40				
				41				42				

NOTE: MOV's ARE INTERLOCKED ONLY TWO MAY RUN AT A TIME.

23.4	23.4	6.0	TOTAL LOAD

PANEL 'BF-LV' PANEL SCHEDULE

208/120 VOLT, 3 PHASE, 4 WIRE, 50 AMP MAIN BREAKER 25 KA RMS SYM,

NEMA 4X STAINLESS STEEL CIRCUIT BREAKER PANEL WITH NEUTRAL AND GROUND BAR

DESCRIPTION	LOAD VA	WIRE DATA or TAG #	BKR. SIZE	CKT. NO.	PHASE AMPS A Ø	PHASE AMPS B Ø	PHASE AMPS C Ø	CKT. NO.	BKR. SIZE	WIRE DATA or TAG #	LOAD VA	DESCRIPTION
AIR CONDITIONER	1,440	2 #10 2 #12 #10 GND	20 A 1 POLE	1	13.7			2	20 A 2 POLE	2 #10 #10 GND	3,288	PUMP PIT SUMP PUMP
CP 5340 CONTROL CIRCUIT	500	(BF P-14)	20 A 1 POLE	3		13.7		4				
CONTROL PANEL CP 5300	3,175	2 #10 #10 GND	30 A 1 POLE	5			0.0 28.4	6				
				7				8				
				9				10				
				11				12				
				13				14				
				15				16				
				17				18				

25.7	17.9	26.4	TOTAL LOAD

BACK FLUSH SYSTEM POWER CONDUIT and CABLE SCHEDULE

CONDUIT TAG No.	CABLE TYPE & QUANTITY	CONDUIT SIZE	FROM	TO	DETAILS/REMARKS
BF P-01	3 x #2, #8 GND	1-1/2"	MCC-2	CP 5340 (VFD 5340)	SEE DWGS E-300, & 301B FOR ROUTING AND INSTALLATION NOTES.
BF P-02	3 x #2, #6 GND	1-1/2"	MCC-2	CP 5340 (VFD 5350)	SEE DWGS E-300 & E-301A FOR ROUTING AND INSTALLATION NOTES.
BF P-03	3 x #6, #8 GND	1-1/2"	MCC-2	CIRCUIT BREAKER PANEL 'BF-HV'	SEE DWGS E-300 & E-301A FOR ROUTING AND INSTALLATION NOTES.
BF P-04	3 x #10, #10 GND	1"	CIRCUIT BREAKER PANEL 'BF-HV'	TRANSFORMER T-1	
BF P-05	3 x #6, #8 GND	1-1/2"	TRANSFORMER T-1	CIRCUIT BREAKER PANEL 'BF-LV'	
BF P-06	#8	3/4" SCHED 80 PVC	TRANSFORMER T-1 CONTROL PANEL CP	GROUND WELL	SEE DWGS E-300, E-301B & E-307, DETAIL 4
BF P-07	2 x #10, #10 GND	3/4"	CIRCUIT BREAKER PANEL 'BF-LV'	CONTROL PANEL CP 5300	
BF P-08	3 x #12, #12 GND	SEE DETAILS REMARKS COLUMN	CIRCUIT BREAKER PANEL 'BF-HV'	MOV FV 5311	1-1/2" CONDUIT FROM PANEL 'BF-HV TO WIREWAY, FROM WIREWAY TO EACH MOV WITH 3/4" CONDUIT. SEE DWGS E-300 & 301A
BF P-09	3 x #12, #12 GND		CIRCUIT BREAKER PANEL 'BF-HV'	MOV FV 5312	
BF P-10	3 x #12, #12 GND		CIRCUIT BREAKER PANEL 'BF-HV'	MOV FV 5321	
BF P-11	3 x #12, #12 GND		CIRCUIT BREAKER PANEL 'BF-HV'	MOV FV 5322	
BF P-12	3 x #12, #12 GND		CIRCUIT BREAKER PANEL 'BF-HV'	MOV FV 5331	
BF P-13	3 x #12, #12 GND		CIRCUIT BREAKER PANEL 'BF-HV'	MOV FV 5332	
BF P-14	2 x #10, 2 x #12, #10 GND	1"	CIRCUIT BREAKER PANEL 'BF-LV'	CP 5340	ONE AIR CONDITIONER CIRCUIT & ONE CONTROL POWER CIRCUIT SEE DWGS E-300 & E-301B
BF P-15	2 x #10, #10 GND	3/4"	CIRCUIT BREAKER PANEL 'BF-LV'	SUMP PUMP RECEPTACLE	
BF P-16	2 x #12, #12 GND	FLEXIBLE LINE CORD	SUMP PUMP RECEPTACLE	SUMP PUMP	
BF P-17	2 x #12, #12 GND	SEE DETAILS REMARKS COLUMN	CP 5300	STR 5310 CLEANING MOTORS	1-1/2" CONDUIT FROM PANEL 'BF-HV TO WIREWAY, FROM WIREWAY TO EACH MOV WITH 3/4" CONDUIT. SEE DWGS E-300 & 301A
BF P-18					
BF P-19	2 x #12, #12 GND		CP 5300	STR 5320 CLEANING MOTORS	
BF P-20					
BF P-21	2 x #12, #12 GND		CP 5300	STR 5330 CLEANING MOTORS	
BF P-22					
BF P-23	3 x #2, 2 x #14, #6 GND	1-1/2"	CP 5340 (VFD 5340)	BACK FLUSH PUMP MOTOR P 5340	CONNECT IMBEDDED THERMAL SWITCHES FROM MOTORS TO CP 5340 I/O MODULE SEE DRAWING E-314
BF P-24	3 x #2, 2 x #14, #6 GND	1-1/2"	CP 5340 (VFD 5350)	BACK FLUSH PUMP MOTOR P 5350	

UNLESS OTHERWISE NOTED ABOVE GRADE CONDUITS AND FITTINGS SHALL BE PVC COATED RGS

SUN LIGHT RESISTANT, LIQUIDTIGHT, METALLIC CONDUIT SHALL BE USED WHERE FLEXIBILITY IS REQUIRED.

UNLESS OTHERWISE NOTED ALL CONDUCTORS SHALL BE XHHW COPPER

BACK FLUSH SYSTEM CONTROL CONDUIT and CABLE SCHEDULE

CONDUIT TAG No.	CABLE TYPE & QUANTITY	CONDUIT SIZE	FROM	TO	DETAILS/REMARKS
BF C-01	6 PAIR #16 CONTROL CABLE	SEE DETAILS REMARKS COLUMN	CP 5300	STRAINER STR 5310	2" CONDUIT FROM CONTROL PANEL CP 5300 TO WIREWAY, FROM WIREWAY TO EACH DEVICE WITH 3/4" CONDUIT. SEE DWGS E-300 & E-301A
BF C-02	6 PAIR #16 CONTROL CABLE		CP 5300	STRAINER STR 5320	
BF C-03	6 PAIR #16 CONTROL CABLE		CP 5300	STRAINER STR 5330	
BF C-04	CAT 6 ETHERNET CABLE		CP 5300	NPW CONTROL CABINET OPTICAL SWITCH X-204-2	
BF C-05	PROFIBUS CABLE RS-485, COPPER	1"	CP 5300	CP 5340 BACK FLUSH PUMP CONTROL CABINET	SEE DWGS E-300, & E-301B
BF C-06	2 PAIR #16 SHIELDED CABLE	SEE DETAILS REMARKS COLUMN	CP 5300	PDT 5310	2" CONDUIT FROM CONTROL PANEL CP 5300 TO WIREWAY, FROM WIREWAY TO EACH DEVICE WITH 3/4" CONDUIT. SEE DWGS E-300 & E-301A
BF C-07	2 PAIR #16 SHIELDED CABLE		CP 5300	PDT 5320	
BF C-08	2 PAIR #16 SHIELDED CABLE		CP 5300	PDT 5330	
BF C-09	6 PAIR #16 CONTROL CABLE		CP 5300	MOV FV 5311	2" CONDUIT FROM CONTROL PANEL CP 5300 TO WIREWAY, FROM WIREWAY TO EACH DEVICE WITH 3/4" CONDUIT. SEE DWGS E-300 & E-301A
BF C-10	6 PAIR #16 CONTROL CABLE		CP 5300	MOV FV 5312	
BF C-11	6 PAIR #16 CONTROL CABLE		CP 5300	MOV FV 5321	
BF C-12	6 PAIR #16 CONTROL CABLE		CP 5300	MOV FV 5322	
BF C-13	6 PAIR #16 CONTROL CABLE		CP 5300	MOV FV 5331	2" CONDUIT FROM CONTROL PANEL CP 5300 TO WIREWAY, FROM WIREWAY TO EACH DEVICE WITH 3/4" CONDUIT. SEE DWGS E-300 & E-301A
BF C-14	6 PAIR #16 CONTROL CABLE		CP 5300	MOV FV 5332	
BF C-15	MANUFACTURER'S CABLE	3/4"	CP 5340 FIT 5300 FLOW METER PKG.	FE 5300 FLOW METER	
BF C-16	2 PAIR #16 SHIELDED CABLE	3/4"	CP 5340	PDT 5310 DIFFERENTIAL PRESSURE TRANSDUCER	
BF C-17	MANUFACTURER'S CABLE	3/4"	FLOAT SWITCH LSHH 5300	CP 5340 I/O MODULE	BACK FLUSH PUMP PIT
BF C-18	2 PAIR #16 CABLE	3/4"	ZSL 5300	CP 5340 I/O MODULE	

UNLESS OTHERWISE NOTED ABOVE GRADE CONDUITS AND FITTINGS SHALL BE PVC COATED RGS

SUN LIGHT RESISTANT, LIQUIDTIGHT, METALLIC CONDUIT SHALL BE USED WHERE FLEXIBILITY IS REQUIRED.

UNLESS OTHERWISE NOTED ALL CONDUCTORS SHALL BE XHHW COPPER

No.	Date	Revisions	App.

STATE OF TEXAS
LARRY M. BARFIELD
39337
REGISTERED PROFESSIONAL ENGINEER
4-21-11

Binkley & Barfield, Inc
consulting engineers
Texas Registration Number F-257
1716 Seamist Drive
Houston, Texas 77008-3189
(713) 869-3433

SURVEYED BY: AMANI ENG. | FIELD BOOK NO. : P-5486

CITY OF HOUSTON
DEPARTMENT OF PUBLIC WORKS AND ENGINEERING

ALMEDA SIMS WWTP & SPF IMPROVEMENTS PACKAGE II

BACK FLUSH SYSTEM BREAKER PANEL AND CONDUIT/CABLE SCHEDULES

FILE NO:	-
WBS:	R-000298-0005-4
DRAWING SCALE	NTS
CITY OF HOUSTON PM	IRAJ RANJBAR, P.E.
DWG NO. :	E-305
SHEET NO.	114 OF 147

PUBLIC WORKS AND ENGINEERING ACCEPTED & FILED 49061 CITY DRAWING NUMBER HOUSTON, TEXAS

G:\115805 Almeda Sims Package II\Cadd Dwgs_E-305 Panel & Cable Schedules.dwg Sep 21,2011 - 9:24am RPD

COLOR TABLE:

ORIGINAL SCALE IN INCHES FOR REDUCED PLANS
0 1 2 3

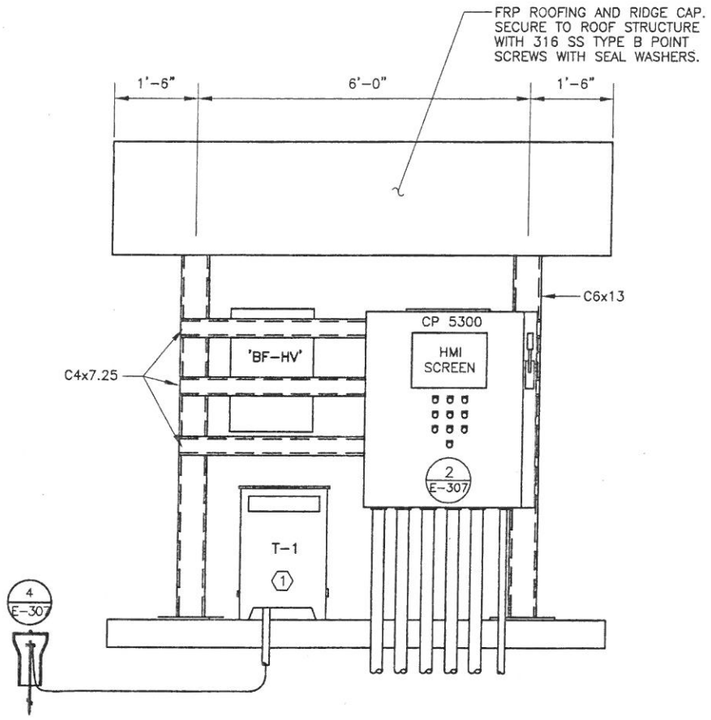

SWITCHRACK – NORTH ELEVATION 1 / E-306
SCALE: NTS

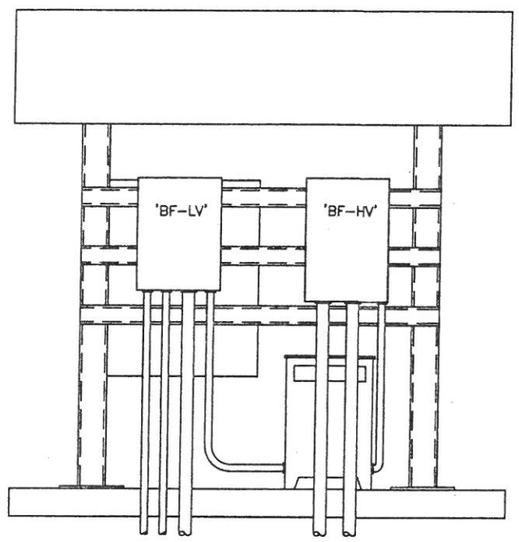

SWITCHRACK – SOUTH ELEVATION 2 / E-306
SCALE: NTS

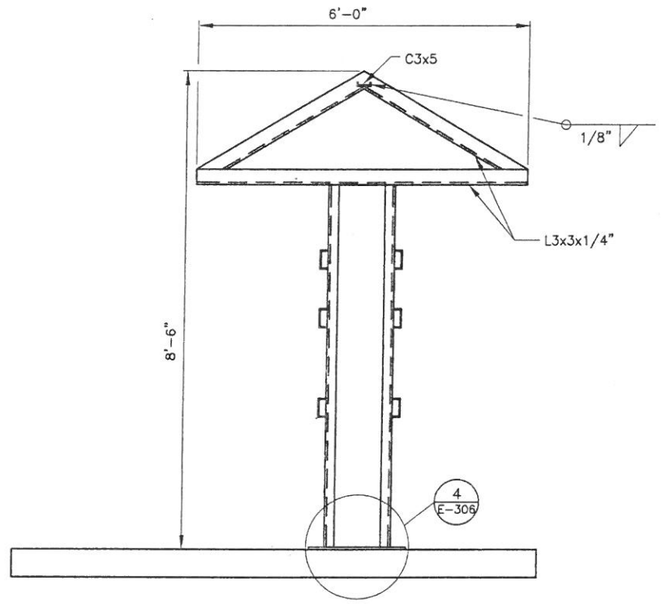

SWITCHRACK END DETAIL 3 / E-306
SCALE: NTS

KEYED NOTES:

1. LOCATE TRANSFORMER T-1 ON EAST SIDE OF EQUIPMENT PAD TO MAINTAIN REQUIRED NEC WORKING CLEARANCES UNDER CIRCUIT BREAKER PANELS 'BF-HV' AND 'BF-LV'.

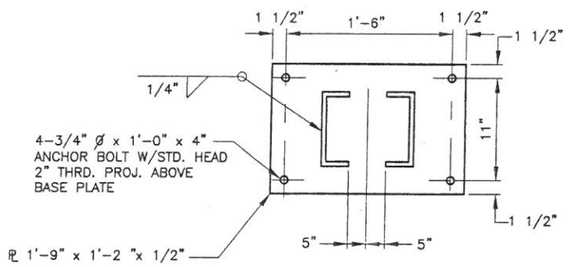

BASE PLATE DETAIL 4 / E-306
SCALE: NTS

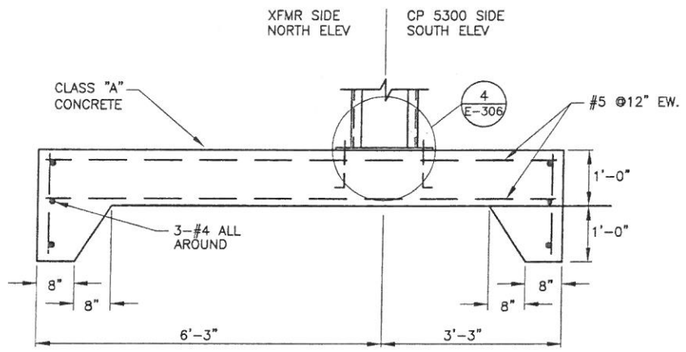

SWITCHRACK FOUNDATION DETAIL 5 / E-306
SCALE: NTS

ORIGINAL SCALE IN INCHES FOR REDUCED PLANS
0 1 2 3
COLOR TABLE:
G:\115805 Almeda Sims Package II\Cadd Dwgs\E-306 Equipment Rack.dwg Sep 21,2011 - 10:26am RPD

No.	Date	Revisions	App.

STATE OF TEXAS
LARRY M. BARFIELD
39337
REGISTERED PROFESSIONAL ENGINEER
9-21-11

Binkley & Barfield, Inc
consulting engineers
Texas Registration Number F-257
1710 Seamist Drive
Houston, Texas 77008-3189
(713) 869-3433

SURVEYED BY: AMANI ENG. | FIELD BOOK NO. : P-5486

CITY OF HOUSTON
DEPARTMENT OF PUBLIC WORKS AND ENGINEERING

ALMEDA SIMS WWTP & SPF IMPROVEMENTS PACKAGE II

BACK FLUSH SYSTEM EQUIPMENT RACK

FILE NO:	–
WBS: R-000298-0005-4	
DRAWING SCALE	NO SCALE
CITY OF HOUSTON PM	IRAJ RANJBAR, P.E.
DWG NO. :	E-306
SHEET NO.	115 OF 147

PUBLIC WORKS AND ENGINEERING
ACCEPTED & FILED
49061
CITY DRAWING NUMBER
HOUSTON, TEXAS

MCC-2 CHLORINATION AREA ELECTRICAL BUILDING

BAY 1	BAY 2	BAY 3	BAY 4	BAY 5	BAY 6	BAY 7
150 KVAR CAPACITOR DISCONNECT SWITCH	AMMETER & VOLTMETER	150 KVAR CAPACITOR FEEDER BREAKER	BLOWER #1	BLOWER OIL COOLER	SPACE	SPACE
	WEST SCUM PUMP			NPW SUMP PUMP	BACK FLUSH PUMP P 5340 ①	BACK FLUSH PUMP P 5350 ①
150 KVAR CAPACITOR	EAST SCUM PUMP	SPARE	BLOWER #2	BLOWER OIL COOLER		
	600 A MAIN BREAKER WITH GF	MIXER		BREAKER PANEL 'BF-HV' ②		
			XFMR DECHL CNTRL BLDG	SCREEN		
			SPARE	SPARE		

MCC-2 ELEVATION — SCALE: NTS — 1 / E-307

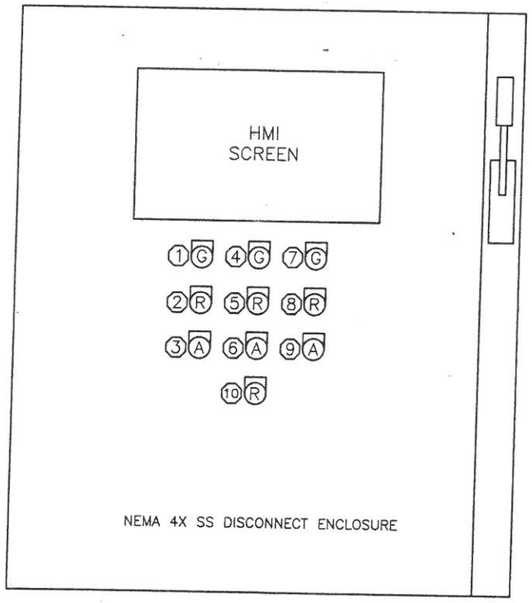

CONTROL CABINET CP 5300 ELEVATION — SCALE: NTS — 2 / E-307

LEGEND PLATE TEXT

1. WEST STRAINER STR 5310 IN SERVICE
2. WEST STRAINER STR 5310 IN FLUSH CYCLE
3. WEST STRAINER STR 5310 IN STANDBY
4. CENTER STRAINER STR 5320 IN SERVICE
5. CENTER STRAINER STR 5320 IN FLUSH CYCLE
6. CENTER STRAINER STR 5320 IN STANDBY
7. EAST STRAINER STR 5330 IN SERVICE
8. EAST STRAINER STR 5330 IN FLUSH CYCLE
9. EAST STRAINER STR 5330 IN STANDBY
1. MAIN POWER ON

KEYED NOTES:

① DISCONNECT AND REMOVE EXISTING SOFT START COMPONENTS. LEAVE 100 AMP MCP'S INTACT FOR REUSE AS PER MCC-2 ONE-LINE DIAGRAM, SEE DRAWING E-303. RE-LABEL CUBICLES AS NOTED.

② PROVIDE NEW 50A/3P CIRCUIT BREAKER FOR FEEDER CIRCUIT TO BREAKER PANEL 'BF-HV'

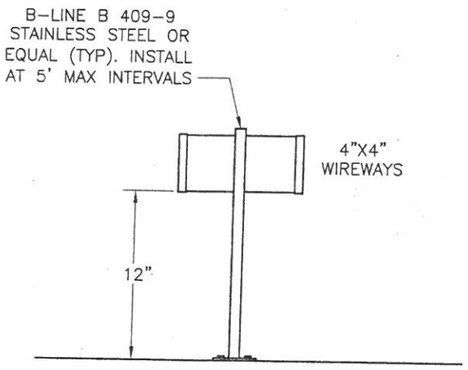

WIREWAY INSTALLATION DETAIL — SCALE: NTS — 3 / E-307

NOTES:

1. INSTALL TWO 4" x 4" NEMA 4X STAINLESS STEEL WIREWAYS. LOCATE AS SHOWN ON ENLARGED ELECTRICAL SITE PLAN. SEE DWG E-301A.
2. SPACE BOTTOM OF WIREWAYS 12" ABOVE FINISHED GRADE.

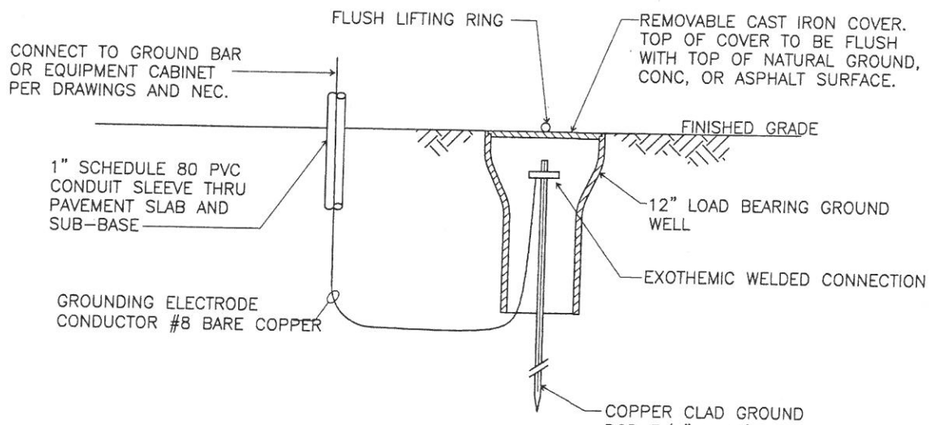

GROUND WELL DETAIL — SCALE: NTS — 4 / E-307

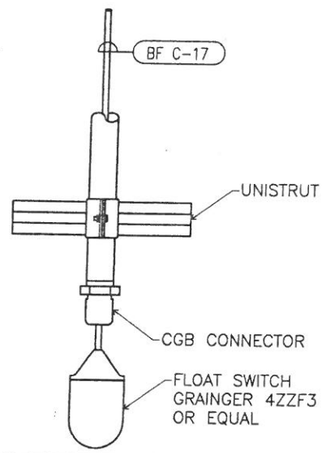

BOTTOM OF BACK FLUSH PUMP PIT

HIGH LEVEL FLOAT SWITCH DETAIL — SCALE: NTS — 5 / E-307

No.	Date	Revisions	App.

STATE OF TEXAS — LARRY M. BARFIELD — 39337 — REGISTERED PROFESSIONAL ENGINEER — 9-21-11

Binkley & Barfield, Inc
consulting engineers
Texas Registration Number F-257
1710 Seamist Drive
Houston, Texas 77008-3189
(713) 869-3433

SURVEYED BY: AMANI ENG. — FIELD BOOK NO. : P-5486

CITY OF HOUSTON
DEPARTMENT OF PUBLIC WORKS AND ENGINEERING

ALMEDA SIMS WWTP & SPF IMPROVEMENTS PACKAGE II

BACK FLUSH SYSTEM ELECTRICAL DETAILS

FILE NO:	–
WBS: R-000298-0005-4	
DRAWING SCALE	NO SCALE
CITY OF HOUSTON PM	IRAJ RANJBAR, P.E.
DWG NO. :	E-307
SHEET NO. 116 OF 147	

PUBLIC WORKS AND ENGINEERING — ACCEPTED & FILED — 49061 — CITY DRAWING NUMBER — HOUSTON, TEXAS

G:\115805 Almeda Sims Package II\Cadd Dwgs\E-307 Elec Details.dwg Sep 21,2011 - 9:31am RHD

COLOR TABLE:

ORIGINAL SCALE IN INCHES FOR REDUCED PLANS
0 1 2 3

FIELD

CONTROL PANEL CP 5300

120 VOLT POWER BUS

(L) (N)

BF P-07

POWER ON

1FU 10A

120 VOLT CONTROL POWER

CONTROL POWER SURGE PROTECTOR

120 VAC CONTROL POWER

PLC 5300

(L) 120 VAC CONTROL POWER (N)

24 VDC PLC POWER

24(+) 24(-)

WEST STRAINER BACK FLUSH SYSTEM
STR 5310

OPEN MTR OPEN

CLOSE MTR CLOSE

R1

WEST BACK FLUSH VALVE OPERATOR
FV 5313

BF C-01

WEST SCREEN FLUSH VALVE FV 5313 OPEN

DI WEST VALVE FV 5313 OPEN

WEST SCREEN FLUSH VALVE FV 5313 CLOSED

DI WEST VALVE FV 5313 CLOSED

DO WEST VALVE FV 5313 CONTROL

BF P-17 & P-18

WEST SCREEN CLEANING MOTORS

1 MTR 2 MTR

1CB 15A

2CB 15A

WM

R2

DO START WEST STR 5310 MOTORS

WEST SCREEN STR 5310 CLEANING MOTOR O.L.

DI WEST STR 5310 MOTOR O.L.

CENTER STRAINER BACK FLUSH SYSTEM
STR 5320

OPEN MTR OPEN

CLOSE MTR CLOSE

R3

CENTER BACK FLUSH VALVE OPERATOR
FV 5323

BF C-02

CENTER SCREEN FLUSH VALVE FV 5323 OPEN

DI CENTER VALVE FV 5323 OPEN

CENTER SCREEN FLUSH VALVE FV 5323 CLOSED

DI CENTER VALVE FV 5323 CLOSED

DO CENTER VALVE FV 5323 CONTROL

BF P-19 & P-20

CENTER SCREEN CLEANING MOTORS

1 MTR 2 MTR

3CB 15A

4CB 15A

CM

R4

DO START CENTER STR 5320 MOTORS

CENTER SCREEN STR 5320 CLEANING MOTOR O.L.

DI CENTER STR 5320 MOTOR O.L.

(L) (N) (L) (N) +24 -24

MATCHLINE 1 – SEE SHEET E-309

SEE SPECIFICATION SECTION 13440 FOR PLC REQUIREMENTS

SEE SPECIFICATION SECTION 11176 NPW BACKUP PUMP SYSTEM FOR PUMP AND VFD REQUIREMENTS

(1) SINGLE POLE, DIN RAIL MOUNTED, FEED THROUGH CIRCUIT BREAKER. TYPICAL OF 6.

No.	Date	Revisions	Apd

STATE OF TEXAS
DARRELL J. McADAMS
54522
LICENSED
PROFESSIONAL ENGINEER
9-21-11

Binkley & Barfield, Inc
consulting engineers
Texas Registration Number F-257
1710 Seamist Drive
Houston, Texas 77008-3189
(713) 869-3433

SURVEYED BY: AMANI ENG. | FIELD BOOK NO. : P-5486

CITY OF HOUSTON
DEPARTMENT OF PUBLIC WORKS AND ENGINEERING

ALMEDA SIMS WWTP & SPF IMPROVEMENTS PACKAGE II

NPW STRAINER
BACK FLUSH SYSTEM
CONTROL SCHEMATIC 1 OF 7

FILE NO:	–
WBS: R-000298-0005-4	
DRAWING SCALE	
NO SCALE	
CITY OF HOUSTON PM	
IRAJ RANJBAR, P.E.	
DWG NO. :	E-308
SHEET NO. 117 OF 147	

PUBLIC WORKS AND ENGINEERING
ACCEPTED & FILED
49061
CITY DRAWING NUMBER
HOUSTON, TEXAS

COLOR TABLE:

ORIGINAL SCALE IN INCHES FOR REDUCED PLANS
0 1 2 3

G:\115805 Almeda Sims Package II\Cadd Dwgs_E-308 Inst Cntrl Schematic 1 of 7.DWG Sep 21,2011 - 11:36am RPD

G:\115805 Almeda Sims Package II\Cadd Dwgs\E-309 Inst Cntrl Schematic 2 of 7.DWG Sep 21,2011 - 11:39am RHD

COLOR TABLE:

ORIGINAL SCALE IN INCHES
FOR REDUCED PLANS
0 1 2 3

FIELD

CONTROL PANEL CP 5300

EAST STRAINER BACK FLUSH SYSTEM
STR 5330

MATCHLINE 1 – SEE SHEET E-308

120 VAC POWER BUS (L) (N)

120 VAC CONTROL POWER (L) (N)

24 VDC PLC POWER Z4(+) 24(–)

PLC 5300

OPEN MTR

OPEN

CLOSE MTR

CLOSE

R5

R5

EAST SCREEN FLUSH VALVE FV 5333 OPEN — DI — EAST VALVE FV 5333 OPEN

EAST SCREEN FLUSH VALVE FV 5333 CLOSED — DI — EAST VALVE FV 5333 CLOSED

EAST BACK FLUSH VALVE OPERATOR
FV 5333

BF C–03

DO — EAST VALVE FV 5333 CONTROL

R5

EAST SCREEN CLEANING MOTORS

1 MTR 2 MTR

BF P–21 & P–22

5CB 15A

6CB 15A

DO — START EAST STR 5330 MOTORS

R6

EM

EAST SCREEN STR 5330 CLEANING MOTOR O.L. — DI — EAST STR 5330 MOTOR O.L.

R6

EXISTING NPW CONTROL CABINET

EXISTING OPTICAL SWITCH MODULE

PLC NPW — X–204–2

BF C–04

CAT 6 ETHERNET CABLE — ETHERNET PORT

SEE NOTE 1

SIEMENS HMI

(+) 24VDC (–)

24(+)

24(–)

BACK FLUSH PUMP CONTROL CABINET
CP 5340

BF C–05

PROFIBUS CABLE
COPPER, RS–485

PROFIBUS CABLE
COPPER, RS–485 — PROFIBUS PORT

REMOTE I/O MODULE

SEE SPECIFICATION SECTIONS 11176 & 13440 FOR REMOTE I/O's

VFD 5350 — VFD 5340

120 VAC CONTROL POWER (L) (N) 24(+) 24(–)

MATCHLINE 2 – SEE SHEET E-310

NOTES

1. CONNECT NEW ETHERNET CABLE TO A SPARE PORT AT THE EXISTING OPTICAL SWITCH MODULE

No.	Date	Revisions	App.

STATE OF TEXAS
DARRELL J. McADAMS
54522
LICENSED PROFESSIONAL ENGINEER
9-21-11

Binkley & Barfield, Inc
consulting engineers
Texas Registration Number F-257
1710 Seamist Drive
Houston, Texas 77008-3189
(713) 869-3433

SURVEYED BY: AMANI ENG. | FIELD BOOK NO. : P–5486

CITY OF HOUSTON
DEPARTMENT OF PUBLIC WORKS AND ENGINEERING

ALMEDA SIMS WWTP & SPF IMPROVEMENTS PACKAGE II

NPW STRAINER
BACK FLUSH SYSTEM
CONTROL SCHEMATIC 2 OF 7

FILE NO:	–
WBS: R–000298–0005–4	
DRAWING SCALE	
NO SCALE	
CITY OF HOUSTON PM	
IRAJ RANJBAR, P.E.	
DWG NO. :	E–309
SHEET NO.	118 OF 147

PUBLIC WORKS AND ENGINEERING ACCEPTED & FILED 49061 CITY DRAWING NUMBER HOUSTON, TEXAS

FIELD

CONTROL PANEL CP 5300

MATCHLINE 2 – SEE SHEET E-309

120 VAC CONTROL POWER

(L)

(N)

24 VDC POWER SUPPLY

L

N

1A

3A

24(+)

24V

24(–)

24 VDC

24 VDC PLC POWER

24(+)

24(–)

PLC 5300

BF C-06

4–20ma SIGNAL

2 PR 16 GA SHIELDED CABLE

PDT 5310

WEST STRAINER PRESSURE TRANSDUCER

LOOP SURGE PROTECTOR

L

1

2

AI

WEST STRAINER DIFFERENTIAL PRESSURE

BF C-07

4–20ma SIGNAL

2 PR 16 GA SHIELDED CABLE

PDT 5320

CENTER STRAINER PRESSURE TRANSDUCER

LOOP SURGE PROTECTOR

AI

CENTER STRAINER DIFFERENTIAL PRESSURE

BF C-08

4–20ma SIGNAL

2 PR 16 GA SHIELDED CABLE

PDT 5330

EAST STRAINER PRESSURE TRANSDUCER

LOOP SURGE PROTECTOR

AI

EAST STRAINER DIFFERENTIAL PRESSURE

120 VAC CONTROL POWER

24 VDC CONTROL POWER

24 VDC PLC POWER

MATCHLINE 3 – SEE SHEET E-311

G:\115805 Almeda Sims Package II\Cadd Dwgs\E-310 Inst Cntrl Schematic 3 of 7.DWG Sep 21,2011 – 11:40am RPD

COLOR TABLE:

ORIGINAL SCALE IN INCHES FOR REDUCED PLANS

0 1 2 3

No.	Date	Revisions	App.

STATE OF TEXAS
DARRELL J. McADAMS
54522
LICENSED PROFESSIONAL ENGINEER
9-21-11

Binkley & Barfield, Inc
consulting engineers
Texas Registration Number F-257
1710 Seamist Drive
Houston, Texas 77008-3189
(713) 869-3433

SURVEYED BY: AMANI ENG. | FIELD BOOK NO. : P-5486

CITY OF HOUSTON
DEPARTMENT OF PUBLIC WORKS AND ENGINEERING

ALMEDA SIMS WWTP & SPF IMPROVEMENTS PACKAGE II

NPW STRAINER
BACK FLUSH SYSTEM
CONTROL SCHEMATIC 3 OF 7

FILE NO:	–
WBS: R-000298-0005-4	
DRAWING SCALE	NO SCALE
CITY OF HOUSTON PM	IRAJ RANJBAR, P.E.
DWG NO. :	E-310
SHEET NO. 119 OF 147	

PUBLIC WORKS AND ENGINEERING ACCEPTED & FILED
49061
CITY DRAWING NUMBER
HOUSTON, TEXAS

G:\115805 Almeda Sims Package II\Cadd Dwgs\E-311 Inst Cntrl Schematic 4 of 7.DWG Sep 21,2011 - 11:42am RPD

FIELD

CONTROL PANEL CP 5300

MATCHLINE 3 – SEE SHEET E-310

24(+)
24(–)
WEST MOV FV 5311
OPEN WEST MOV FV 5311
CLOSE WEST MOV FV 5311
WEST MOV FV 5311 OPEN
WEST MOV FV 5311 CLOSED
480 VAC BF–HV 1,3,5
BF P–08
BF C–09

24(+)
24(–)
WEST MOV FV 5312
OPEN WEST MOV FV 5312
CLOSE WEST MOV FV 5312
WEST MOV FV 5312 OPEN
WEST MOV FV 5312 CLOSED
480 VAC BF–HV 2,4,6
BF P–09
BF C–10

24(+)
24(–)
CENTER MOV FV 5321
OPEN CENTER MOV FV 5321
CLOSE CENTER MOV FV 5321
CENTER MOV FV 5321 OPEN
CENTER MOV FV 5321 CLOSED
480 VAC BF–HV 7,9,11
BF P–10
BF C–11

PLC 5300

24 VDC PLC POWER
24(+) 24(–)
DO OPEN WEST MOV FV 5311
DO CLOSE WEST MOV FV 5311
DI WEST MOV FV 5311 OPEN
DI WEST MOV FV 5311 CLOSED

24 VDC PLC POWER
24(+) 24(–)
DO OPEN WEST MOV FV 5312
DO CLOSE WEST MOV FV 5312
DI WEST MOV FV 5312 OPEN
DI WEST MOV FV 5312 CLOSED

24 VDC PLC POWER
24(+) 24(–)
DO OPEN CENTER MOV FV 5321
DO CLOSE CENTER MOV FV 5321
DI CENTER MOV FV 5321 OPEN
DI CENTER MOV FV 5321 CLOSED

24 VDC PLC POWER
24(+) 24(–)

MATCHLINE 4 – SEE SHEET E-312

COLOR TABLE:

ORIGINAL SCALE IN INCHES FOR REDUCED PLANS
0 1 2 3

No.	Date	Revisions	App.

STATE OF TEXAS
DARRELL J. McADAMS
54522
LICENSED PROFESSIONAL ENGINEER
9-21-11

Binkley & Barfield, Inc
consulting engineers
Texas Registration Number F-257
1710 Seamist Drive
Houston, Texas 77008-3189
(713) 869-3433

SURVEYED BY: AMANI ENG. | FIELD BOOK NO. : P–5486

CITY OF HOUSTON
DEPARTMENT OF PUBLIC WORKS AND ENGINEERING

ALMEDA SIMS WWTP & SPF IMPROVEMENTS PACKAGE II

NPW STRAINER
BACK FLUSH SYSTEM
CONTROL SCHEMATIC 4 OF 7

FILE NO:	–
WBS: R–000298–0005–4	
DRAWING SCALE	
NO SCALE	
CITY OF HOUSTON PM	
IRAJ RANJBAR, P.E.	
DWG NO. :	E–311
SHEET NO. 120 OF 147	

PUBLIC WORKS AND ENGINEERING
ACCEPTED & FILED
49061-
CITY DRAWING NUMBER
HOUSTON, TEXAS

FIELD

CONTROL PANEL CP 5300 -

MATCHLINE 4 – SEE SHEET E-311

24(+)
24(–)
CENTER MOV FV 5322
OPEN CENTER MOV FV 5322
CLOSE CENTER MOV FV 5322
CENTER MOV FV 5322 OPEN
CENTER MOV FV 5322 CLOSED
BF C-12
480 VAC BF-HV 8,10,12
BF P-11

24(+)
24(–)
EAST MOV FV 5331
OPEN EAST MOV FV 5331
CLOSE EAST MOV FV 5331
EAST MOV FV 5331 OPEN
EAST MOV FV 5331 CLOSED
BF C-13
480 VAC BF-HV 13,15,17
BF P-12

24(+)
24(–)
EAST MOV FV 5332
OPEN EAST MOV FV 5332
CLOSE EAST MOV FV 5332
EAST MOV FV 5332 OPEN
EAST MOV FV 5332 CLOSED
BF C-14
480 VAC BF-HV 14,16,18
BF P-13

PLC 5300

24 VDC PLC POWER
24(+) 24(–)
DO OPEN CENTER MOV FV 5322
DO CLOSE CENTER MOV FV 5322
DI CENTER MOV FV 5322 OPEN
DI CENTER MOV FV 5322 CLOSED

24 VDC PLC POWER
24(+) 24(–)
DO OPEN EAST MOV FV 5331
DO CLOSE EAST MOV FV 5331
DI EAST MOV FV 5331 OPEN
DI EAST MOV FV 5331 CLOSED

24 VDC PLC POWER
24(+) 24(–)
DO OPEN EAST MOV FV 5332
DO CLOSE EAST MOV FV 5332
DI EAST MOV FV 5332 OPEN
DI EAST MOV FV 5332 CLOSED

24 VDC PLC POWER
24(+) 24(–)

MATCHLINE 5 – SEE SHEET E-313

G:\115805 Almeda Sims Package II\Cadd Dwgs\E-312 Inst Cntrl Schematic 5 of 7.DWG Sep 21,2011 – 2:16pm RPD

COLOR TABLE:

ORIGINAL SCALE IN INCHES FOR REDUCED PLANS
0 1 2 3

No.	Date	Revisions	App.

STATE OF TEXAS
DARRELL J. McADAMS
54522
LICENSED
PROFESSIONAL ENGINEER
9-21-11

Binkley & Barfield, Inc
consulting engineers
Texas Registration Number F-257
1770 Seamist Drive
Houston, Texas 77008-3189
(713) 869-3433

SURVEYED BY: AMANI ENG. | FIELD BOOK NO. : P-5486

CITY OF HOUSTON
DEPARTMENT OF PUBLIC WORKS AND ENGINEERING

ALMEDA SIMS WWTP & SPF IMPROVEMENTS PACKAGE II

NPW STRAINER
BACK FLUSH SYSTEM
CONTROL SCHEMATIC 5 OF 7

FILE NO:	–
WBS: R-000298-0005-4	
DRAWING SCALE	
NO SCALE	
CITY OF HOUSTON PM	
IRAJ RANJBAR, P.E.	
DWG NO. :	E-312
SHEET NO.	121 OF 147

PUBLIC WORKS AND ENGINEERING
ACCEPTED & FILED
49061
CITY DRAWING NUMBER
HOUSTON, TEXAS

FIELD	CONTROL PANEL CP 5300

MATCHLINE 5 – SEE SHEET E-312

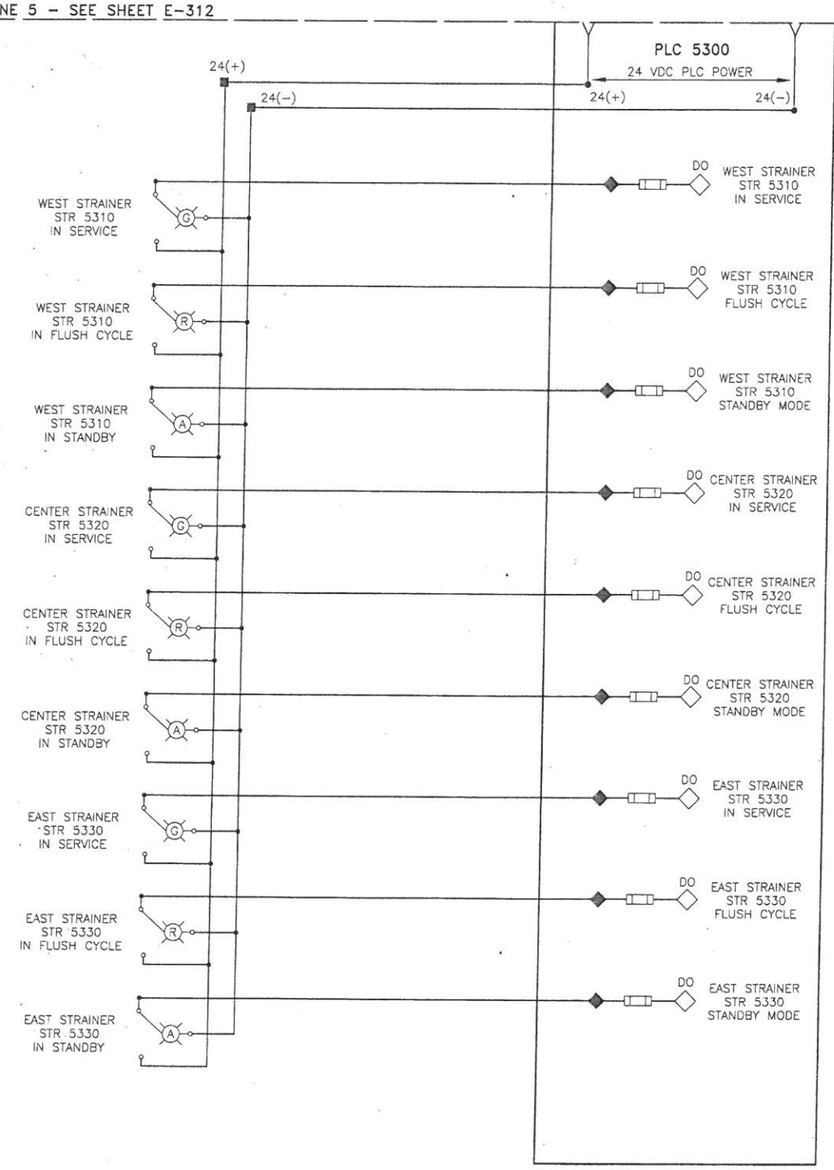

No.	Date	Revisions	App.

STATE OF TEXAS
DARRELL J. McADAMS
54522
LICENSED
PROFESSIONAL ENGINEER
9-21-11

Binkley & Barfield, Inc
consulting engineers
Texas Registration Number F-257
1710 Seamist Drive
Houston, Texas 77008-3189
(713) 869-3433

SURVEYED BY: AMANI ENG. | FIELD BOOK NO. : P-5486

CITY OF HOUSTON
DEPARTMENT OF PUBLIC WORKS AND ENGINEERING

ALMEDA SIMS WWTP & SPF IMPROVEMENTS PACKAGE II

NPW STRAINER
BACK FLUSH SYSTEM
CONTROL SCHEMATIC 6 OF 7

FILE NO:	–
WBS: R-000298-0005-4	
DRAWING SCALE	
NO SCALE	
CITY OF HOUSTON PM	
IRAJ RANJBAR, P.E.	
DWG NO. :	E-313
SHEET NO. 122 OF 147	

ACCEPTED & FILED
49061
CITY DRAWING NUMBER

G:\115805 Almeda Sims Package II\Cadd Dwgs\ E-313 Inst Cntrl Schematic 6 of 7.DWG Sep 21,2011 - 2:17pm (RP)
COLOR TABLE:
ORIGINAL SCALE IN INCHES FOR REDUCED PLANS
0 1 2 3

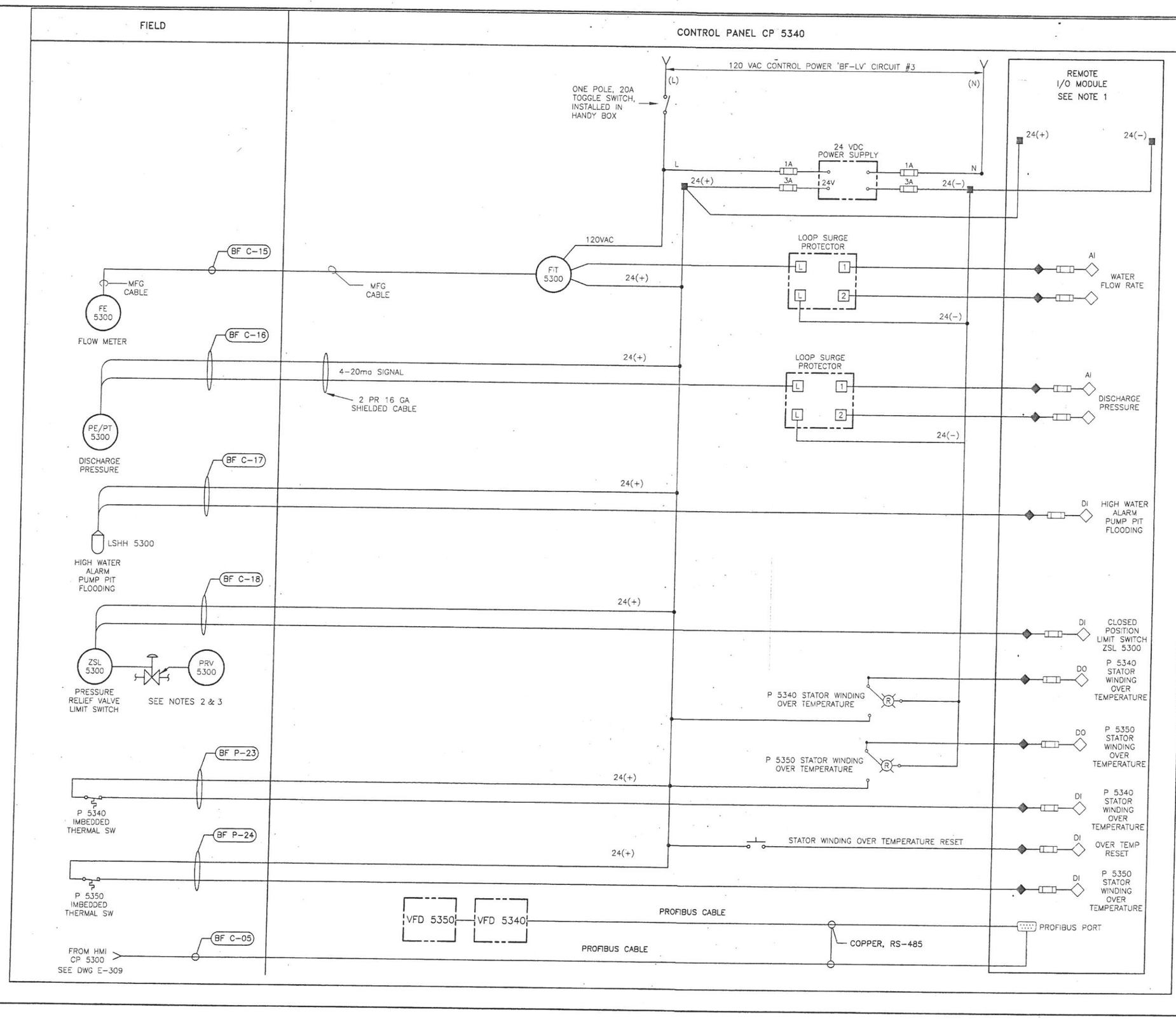

NOTES:

1. REMOTE I/O MODULE, REFER TO SPECIFICATION SECTIONS 11176 AND 13440.
2. PRV 5300 IS NORMALLY CLOSED. FLOW THROUGH PRV 5300 IS INDICATED BY ZSL 5300 CHANGING STATE.
3. PRV 5300 IS LOCATED ON THE NEW BACK FLUSH PUMP DISCHARGE LINE.

No.	Date	Revisions	App.

STATE OF TEXAS
DARRELL J. McADAMS
54522
LICENSED PROFESSIONAL ENGINEER
9-21-11

Binkley & Barfield, Inc
consulting engineers
Texas Registration Number F-257
1710 Seamist Drive
Houston, Texas 77008-3189
(713) 869-3433

SURVEYED BY: AMANI ENG. | FIELD BOOK NO. : P-5486

CITY OF HOUSTON
DEPARTMENT OF PUBLIC WORKS AND ENGINEERING

ALMEDA SIMS WWTP & SPF IMPROVEMENTS PACKAGE II

NPW STRAINER
BACK FLUSH SYSTEM
CONTROL SCHEMATIC 7 OF 7

FILE NO:	–
WBS: R-000298-0005-4	
DRAWING SCALE	
NO SCALE	
CITY OF HOUSTON PM	
IRAJ RANJBAR, P.E.	
DWG NO. :	E-314
SHEET NO.	123 OF 147

PUBLIC WORKS AND ENGINEERING ACCEPTED & FILED
49061
CITY DRAWING NUMBER
HOUSTON, TEXAS

G:\115805 Almeda Sims Package II\Cadd Dwgs_E-314 Instl Cntrl Schematic 7 of 7.DWG Sep 21,2011 - 2:18pm RPD

COLOR TABLE:

ORIGINAL SCALE IN INCHES FOR REDUCED PLANS
0 1 2 3

G:\115805 Almeda Sims Package II\Cadd Dwgs\E-400 Conduit Cable Schedules.dwg Sep 21,2011 - 9:38am RPD

COLOR TABLE:

ORIGINAL SCALE IN INCHES
FOR REDUCED PLANS
0 1 2 3

PACKAGE II

PACKAGE II CONDUIT and CABLE SCHEDULE

CONDUIT TAG No.	CABLE SIZE & QUANTITY	CONDUIT SIZE	VOLTAGE	FROM	TO	COMMENTS/REMARKS
3C-P08	3x #8, #10 GND (FUTURE)	1-1/2"	480	TWAS PUMP #1 STARTER	TWAS PUMP #1 FIELD DISCONNECT SW	
3C-P07	3x #8, #10 GND (FUTURE)	1-1/2"	480	TWAS PUMP #2 STARTER	TWAS PUMP #2 FIELD DISCONNECT SW	
3C-P08	3x #8, #10 GND	1-1/2"	480	TWAS PUMP #3 STARTER	TWAS PUMP #3 FIELD DISCONNECT SW	
3C-P09	6 x #10, #10 GND	1-1/2"	480	THICKENER #1 STARTER	THICKENER #1	SHARE DUCT BANK CONDUIT WITH 3C-P12 & P35
3C-P12			480	SCREEN DRIVE #3 STARTER	SCREEN DRIVE #3 FLD DISCONNECT SW	SHARE DUCT BANK CONDUIT WITH 3C-P09 & P35
3C-P27	2 x #4, #8 GND	1-1/2"	480 1Ø PHASE	PANEL 3C-HV	OLD MCC-3C BLDG 15KVA XFORM	
3C-P30	2 x #8, #12 GND	3/4"	120	HAND HOLE P2 WAP3	LIGHT STANCHIONS	120 VOLT POWER FOR UTILITY OUTLETS SHARES #8 COMMON GROUND
3C-P33	1 x #12, #12 NEUTRAL	3/4"	277	HAND HOLE P2 WAP3	OUTSIDE LIGHTS	OUTSIDE LIGHTS ON SCREENING AND THICKENER STRUCTURES.
3C-P35	3 x #10, #10 GND		480	PANEL 3C-HV	MOV FV 731	SHARE DUCT BANK CONDUIT WITH 3C-P09 & P12
3C-C01	PROFIBUS	1-1/2"	DIGITAL DATA	PROFIBUS CABLE IS 'DAISY CHAIN' CONNECTED FROM CP TWAS TO CP 700 TO CP 710 TO CP 3C. SEE SHEET I-101		
3C-C02	4 x #12	3/4"	120 VOLT	MCC-3C THICKENER #1 STARTER BUCKET	CP 810	THICKENER #1 HARD WIRED OVER TORQUE 'E' STOP
3C-C03	10 PAIR #16	1-1/2"	CONTROL SIGNALS	CP 810	CP TWAS	THICKENER #1 CONTROL SIGNALS
3C-C14	6 PAIR #16	3/4"	CONTROL SIGNALS	MOV FV731	CP 710	
3C-C15	12 PAIR #16	3/4"	CONTROL SIGNALS	RS 710 SCREEN PACKAGE #3	CP 710	ROTARY SCREEN CONTROLS
3C-C15A	6 x #14	3/4"	120 VOLT	RS 710 SCREEN PACKAGE #3	CP 710 SEE SHEET E-405 DETAIL 2	120 VOLT POWER FOR SOLENOIDS AND LUBRICATION PUMP

NOTES:
3C-P'XX DENOTES POWER
3C-C'XX DENOTES CONTROL
SEE SHEET E-107 FOR SUPPLEMENTAL SCREENING FACILITY CONDUIT AND CABLE SCHEDULE

PACKAGE I REFERENCE INFORMATION

MCC – 3C CONDUIT and CABLE SCHEDULE 1 OF 3 PACKAGE I (BY OTHERS)

CONDUIT TAG No.	CABLE SIZE & QUANTITY	CONDUIT SIZE	VOLTAGE	FROM	TO	COMMENTS/REMARKS
3C-P01	3 x 500 Kcmil, 1/0 NEUTRAL	* 4" PVC SCHED 80	480	PAD/MOUNT TRANSFORMER MCC-3C A	MCC-3C SECTION 'A'	* SEE DRAWING E-100 FOR ADDITIONAL DETAILS
3C-P02	3 x 500 Kcmil, 1/0 NEUTRAL	* 4" PVC SCHED 80	480	PAD/MOUNT TRANSFORMER MCC-3C B	MCC-3C SECTION 'B'	* SEE DRAWING E-100 FOR ADDITIONAL DETAILS
3C-P03	1/0 BARE GND	1" PVC SCHED 80	GND POTENTIAL	PAD/MOUNT TRANSFORMERS	GROUNDING ELECTRODE SYSTEM	* SEE DRAWING E-100 FOR ADDITIONAL DETAILS
3C-P04	1/0 BARE GND	1" PVC SCHED 80	GND POTENTIAL	MCC-3C GROUND BUS	GROUNDING ELECTRODE SYSTEM	* SEE DRAWING E-100 FOR ADDITIONAL DETAILS
3C-P05	1/0 BARE GND	MCC INTERNAL	GND POTENTIAL	NEUTRAL BARS	GROUND BUS	MAIN BONDING JUMPERS, INTERNAL TO MCC
3C-P06	3x #8, #10 GND (FUTURE)	1-1/2"	480	TWAS PUMP #1 STARTER	TWAS PUMP #1 FIELD DISCONNECT SW	CONDUIT ONLY AT THIS TIME
3C-P07	3x #8, #10 GND (FUTURE)	1-1/2"	480	TWAS PUMP #2 STARTER	TWAS PUMP #2 FIELD DISCONNECT SW	CONDUIT ONLY AT THIS TIME
3C-P08	3x #8, #10 GND (FUTURE)	1-1/2"	480	TWAS PUMP #3 STARTER	TWAS PUMP #3 FIELD DISCONNECT SW	CONDUIT ONLY AT THIS TIME
3C-P08C	3 x #8, #10 GND	3/4" NIPPLE	480	TWAS PUMP #1 STARTER	P.F. CORRECTION CAPACITOR	MOUNTED ON TOP OF MCC-3C
3C-P07C	3 x #8, #10 GND	3/4" NIPPLE	480	TWAS PUMP #2 STARTER	P.F. CORRECTION CAPACITOR	MOUNTED ON TOP OF MCC-3C
3C-P08C	3 x #8, #10 GND	3/4" NIPPLE	480	TWAS PUMP #3 STARTER	P.F. CORRECTION CAPACITOR	MOUNTED ON TOP OF MCC-3C
3C-P09	6 x #10, #10 GND (FUTURE)	1-1/2"	480	EXISTING THICKENER STARTER	EXISTING THICKENER	CONDUIT ONLY AT THIS TIME SHARE WITH 3C-P12
3C-P10	#4	MCC INTERNAL	GND POTENTIAL	NEUTRAL BAR	POWER PANEL 3C-HV	PANEL 3C-HV NEUTRAL CONDUCTOR, INTERNAL TO MCC
3C-C01	PROFIBUS	1-1/2"	DIGITAL DATA	PROFIBUS CABLE IS 'DAISY CHAIN' CONNECTED FROM CP TWAS TO CP 700 TO CP 710 TO CP 3C. SEE SHEET I-101		

NOTES:
3C-P'XX DENOTES POWER
3C-C'XX DENOTES CONTROL

PACKAGE I REFERENCE INFORMATION

MCC – 3C CONDUIT and CABLE SCHEDULE 2 OF 3 PACKAGE I (BY OTHERS)

CONDUIT TAG No.	CABLE SIZE & QUANTITY	CONDUIT SIZE	VOLTAGE	FROM	TO	COMMENTS/REMARKS
3C-P10	#4	MCC INTERNAL	GND POTENTIAL	MCC NEUTRAL BAR	POWER PANEL 3C-HV NEUTRAL BAR	PANEL 3C-HV NEUTRAL CONDUCTOR, INTERNAL TO MCC
3C-P11	#4	MCC INTERNAL	GND POTENTIAL	POWER PANEL 3C-HV GROUND BAR	MCC GROUND BAR	PANEL 3C-HV NEUTRAL GROUND CONDUCTOR, INTERNAL TO MCC
3C-P12	SEE 3C-P09	1-1/2" PVC IN DUCTBANK	480	SCREEN DRIVE #3 STARTER	SCREEN DRIVE #3 FLD DISCONNECT SW	CONDUIT ONLY AT THIS TIME SHARE WITH 3C-P09
3C-P13	3 x #8, #10 GND	1-1/2" PVC IN DUCTBANK	480	TWAS PUMP #4 STARTER	TWAS PUMP #4 FIELD DISCONNECT SW	
3C-P14	3 x #8, #10 GND	1-1/2" PVC IN DUCTBANK	480	TWAS PUMP #5 STARTER	TWAS PUMP #5 FIELD DISCONNECT SW	
3C-P15	3 x #8, #10 GND	1-1/2" PVC IN DUCTBANK	480	TWAS PUMP #6 STARTER	TWAS PUMP #6 FIELD DISCONNECT SW	
3C-P13C	3 x #8, #10 GND	3/4" NIPPLE	480	TWAS PUMP #4 STARTER	P.F. CORRECTION CAPACITOR	
3C-P14C	3 x #8, #10 GND	3/4" NIPPLE	480	TWAS PUMP #5 STARTER	P.F. CORRECTION CAPACITOR	
3C-P15C	3 x #8, #10 GND	3/4" NIPPLE	480	TWAS PUMP #6 STARTER	P.F. CORRECTION CAPACITOR	
3C-P16	9 x #10, #10 GND 4 x #12 CONTROL WIRES*	1-1/2" PVC IN DUCTBANK WITH #10 GND COMMON	480	SCREEN DRIVE #1 STARTER	SCREEN DRIVE #1 FLD DISCONNECT SW	SHARE 1-1/2" CONDUIT IN DUCTBANK * CONTROL WIRES FROM THICKENER DRIVE HIGH TORQUE SWITCH TO MCC-3C STARTER BUCKET FOR HARD WIRED 'E' STOP
3C-P17			480	SCREEN DRIVE #2 STARTER	SCREEN DRIVE #2 FLD DISCONNECT SW	
3C-P18			480	THICKENER #2 DRIVE STARTER	THICKENER #2 DRIVE FLD DISCONNECT SW	
3C-P19	SEE 3C-P28,P29	1-1/2" PVC IN DUCTBANK	480 & 120 CONTROL	SCREEN CONVEYOR STARTER	SCREEN CONVEYOR DISCONNECT SW	* INCLUDES E-STOP CONTROL WIRES FROM LANYARD SWITCHES. SHARE CONDUIT WITH 3C-P28,P29
3C-P20	3 x #8, #10 GND	3/4"	480	TWAS PUMP #4 FIELD DISCONNECT SW	TWAS PUMP #4	
3C-P21	3 x #8, #10 GND	3/4"	480	TWAS PUMP #5 FIELD DISCONNECT SW	TWAS PUMP #5	
3C-P22	3 x #8, #10 GND	3/4"	480	TWAS PUMP #6 FIELD DISCONNECT SW	TWAS PUMP #6	
3C-P23	3 x #12, #12 GND	3/4"	480	SCREEN DRIVE #1 FLD DISCONNECT SW	SCREEN DRIVE #1	
3C-P24	3 x #12, #12 GND	3/4"	480	SCREEN DRIVE #2 FLD DISCONNECT SW	SCREEN DRIVE #2	
3C-P25	3 x #12, #12 GND	3/4"	480	THICKENER #2 DRIVE FLD DISCONNECT SW	THICKENER #2 DRIVE	
3C-P28	3 x #12, #12 GND	3/4"	480	SCREEN CONVEYOR DISCONNECT SW	SCREEN CONVEYOR	

PACKAGE I REFERENCE INFORMATION

MCC – 3C CONDUIT and CABLE SCHEDULE 3 OF 3 PACKAGE I (BY OTHERS)

CONDUIT TAG No.	CABLE SIZE & QUANTITY	CONDUIT SIZE	VOLTAGE	FROM	TO	COMMENTS/REMARKS
3C-PZ7	2 x #4, #8 GND (FUTURE)	1-1/2"	480 1Ø PHASE	PANEL 3C-HV	OLD MCC-3C BLDG 15KVA XFORM	CONDUIT ONLY AT THIS TIME
3C-P28	3 x #10, 6 x #12, #10 GND 4 x #12 CONTROL WIRES *	SHARE 1-1/2" PVC IN DUCTBANK WITH 3C-P19	480 & 120 CONTROL	PANEL 3C-HV	MOV FV 711	* INCLUDES E-STOP CONTROL WIRES FROM LANYARD SWITCHES. SHARE CONDUIT WITH 3C-P19
3C-P29				PANEL 3C-HV	MOV FV 721	
3C-P30	2 x #8,	1-1/2" PVC IN DUCTBANK #8 GND COMMON TO ALL	120	PANEL 3C-LV	LIGHT STANCHIONS	120 VOLT POWER FOR UTILITY OUTLETS
3C-P31	1 x #12 #12 NEUTRAL		120	PANEL 3C-LV	SCREENING FACILITY CONTROL CABINET CP710	120 VOLT POWER FOR LUBRICATION PUMPS AND SOLENOIDS
3C-P32	2 x #12 2 #12 NEUTRALS		120 VOLT UPS POWER	MCC-3C CONTROL CABINET CP3C	ONE CIRCUIT EACH TO CP 700 & CP 710	120 VOLT UPS POWER FOR SCADA I/O EQUIPMENT ONLY
3C-P33	1 x #12, #12 NEUTRAL		277	MCC-3C LIGHTING CONTACTOR	OUTSIDE LIGHTS	OUTSIDE LIGHTS ON SCREENING AND THICKENER STRUCTURES.
3C-P34	3 x #12, #12 NEUTRAL	MCC INTERNAL	480/277	PANEL 3C-HV	MCC-3C LIGHTING CONTACTOR	
3C-C01	PROFIBUS	1-1/2"	DIGITAL DATA	PROFIBUS CABLE IS 'DAISY CHAIN' CONNECTED FROM CP TWAS TO CP 700 TO CP 710 TO CP 3C. SEE SHEET I-101		
3C-C02	4 x #12	3/4"	120 VOLT	MCC-3C THICKENER #1 STARTER BUCKET	CP XXX	THICKENER #1 HARD WIRED OVER TORQUE 'E' STOP FUTURE
3C-C03	10 PAIR #16	1-1/2"	CONTROL SIGNALS	CP XXX	CP TWAS	THICKENER #1 CONTROL SIGNALS FUTURE
3C-C04	12 PAIR #16	1-1/2"	CONTROL SIGNALS	RS 710 SCREEN PACKAGE #1	CP 710	ROTARY SCREEN CONTROLS
3C-C04A	6 x #14	3/4"	120 VOLT	RS 710 SCREEN PACKAGE #1	CP 710	120 VOLT POWER FOR SOLENOIDS AND LUBRICATION PUMP
3C-C05	12 PAIR #16	1-1/2"	CONTROL SIGNALS	RS 720 SCREEN PACKAGE #2	CP 710	ROTARY SCREEN CONTROLS
3C-C05A	6 x #14	3/4"	120 VOLT	RS 720 SCREEN PACKAGE #2	CP 710	120 VOLT POWER FOR SOLENOIDS AND LUBRICATION PUMP
3C-C06	4 x #12	3/4"	120 VOLT	MCC-3C THICKENER #2 STARTER BUCKET	CP 800	THICKENER #2 HARD WIRED OVER TORQUE 'E' STOP
3C-C07	10 PAIR #16	1-1/2"	CONTROL SIGNALS	CP 800	CP 700	THICKENER #2 CONTROL SIGNALS
3C-C08	4 x #12	3/4"	120 VOLT	MCC-3C SCREEN CONVEYOR STARTER BUCKET	CP 750	SCREEN CONVEYOR HARD WIRED 'E' STOP LANYARD SWITCH
3C-C09	10 PAIR #16	1-1/2"	CONTROL SIGNALS	CP 750	CP 710	SCREEN CONVEYOR CONTROL SIGNALS
3C-C10	2 x #14, #14 GND	3/4"	120 VOLT	CONVEYOR WASH DOWN SOLENOID	CP 710	

No.	Date	Revisions	App.

STATE OF TEXAS
LARRY M. BARFIELD
39337
REGISTERED PROFESSIONAL ENGINEER
4-21-11

Binkley & Barfield, Inc
consulting engineers
Texas Registration Number F-257
1710 Seamist Drive
Houston, Texas 77008-3189
(713) 869-3433

SURVEYED BY: AMANI ENG. | FIELD BOOK NO. : P-5486

CITY OF HOUSTON
DEPARTMENT OF PUBLIC WORKS AND ENGINEERING

ALMEDA SIMS WWTP & SPF IMPROVEMENTS PACKAGE II

CONDUIT & CABLE SCHEDULES

FILE NO:	-
WBS: R-000298-0005-4	
DRAWING SCALE	NO SCALE
CITY OF HOUSTON PM	IRAJ RANJBAR, P.E.
DWG NO. :	E-400
SHEET NO. 124 OF 147	

PUBLIC WORKS AND ENGINEERING
ACCEPTED & FILED
49061
CITY DRAWING NUMBER
HOUSTON, TEXAS

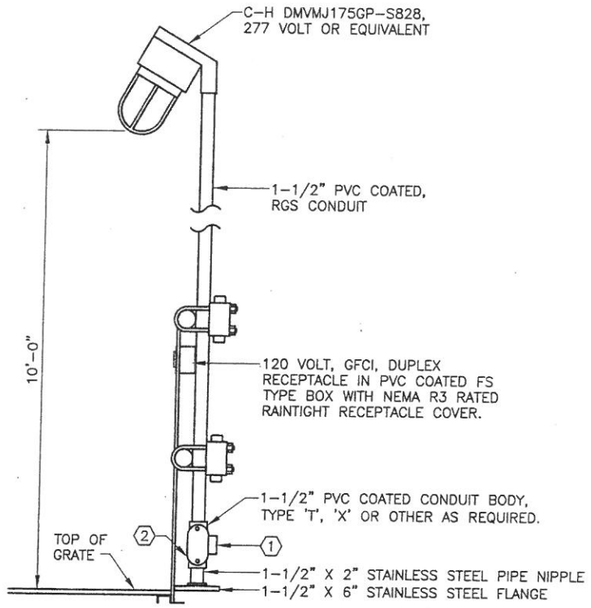

LIGHT STANCHION DETAIL (1) E-401
SCALE: NTS

GENERAL NOTES:

1. STANCHIONS SHALL NOT BE SOLELY DEPENDENT ON RAILINGS FOR SUPPORT. SECURE BASE OF STANCHION TO STRUCTURE AS SHOW. ALTERNATE BRACING, UTILIZING CORROSION RESISTANT FITTINGS MAY BE SUBMITTED TO THE ENGINEER FOR APPROVAL.
2. INSTALL A WEATHERPROOF 120 VOLT GFCI RECEPTACLE ON EACH LIGHT STANCHION, CIRCUIT PER APPLICABLE PANEL AND CONDUIT SCHEDULE.
3. WHERE PRACTICABLE, RECEPTACLE CIRCUIT MAY SHARE CONDUIT SYSTEM WITH LIGHTING CIRCUIT.
4. ALL REDUCTIONS IN PVC COATED CONDUIT SIZE SHALL BE MADE WITH PVC COATED TYPE REC REDUCING COUPLINGS AND NIPPLES. TYPE RE REDUCING BUSHINGS SHALL NOT BE APPROVED.

KEYED NOTES:

(1) TO ACCOMMODATE BRANCH CIRCUIT CONDUIT(S), ORIENT HUB(S) AND REDUCE SIZE WITH TYPE REC PVC COATED FITTING(S) AS PER GENERAL NOTE 1.

(2) PACK THE BOTTOM HUB OF THE CONDUIT BODY WITH DUCT SEAL TO PREVENT PENETRATION OF CORROSIVE GASES

TYPICAL PVC COATED, TYPE 'REC', REDUCING COUPLING

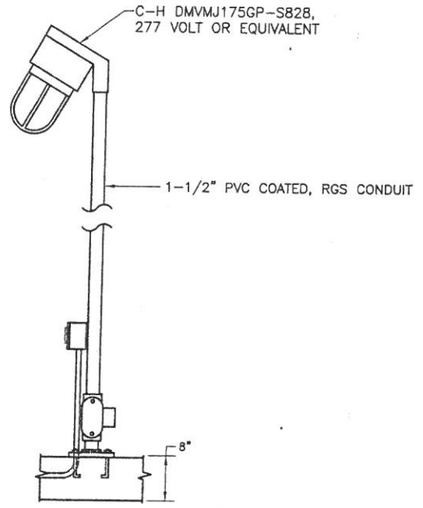

ALTERNATE MOUNTING
FOR SLAB INSTALLATION (1A) E-401
SCALE: NTS

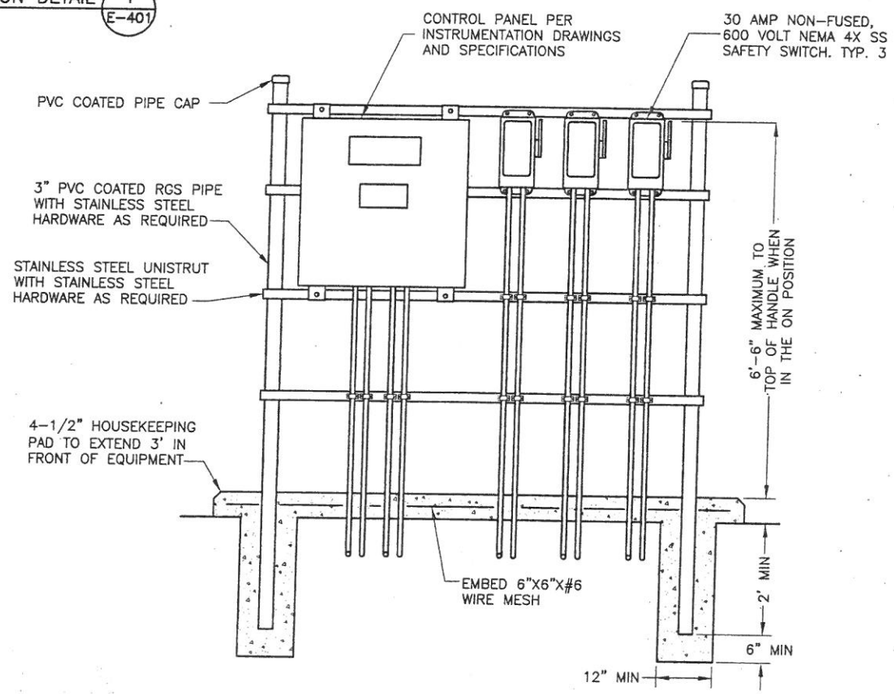

TYPICAL MOUNTING RACK (2) E-401
SCALE: NTS

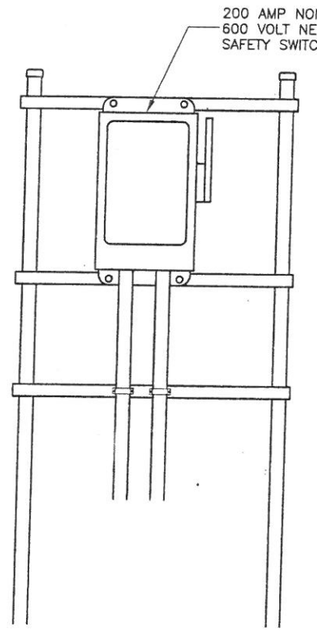

ALL NOTES OF DETAIL 2 APPLY

ALTERNATE MOUNTING RACK (2A) E-401
SCALE: NTS

No.	Date	Revisions	App.

STATE OF TEXAS
LARRY M. BARFIELD
39337
REGISTERED
PROFESSIONAL ENGINEER
4-21-11

Binkley & Barfield, Inc
consulting engineers
Texas Registration Number F-257
1710 Seamist Drive
Houston, Texas 77008-3189
(713) 868-3433

SURVEYED BY: AMANI ENG.	FIELD BOOK NO. : P-5486

CITY OF HOUSTON
DEPARTMENT OF PUBLIC WORKS AND ENGINEERING

ALMEDA SIMS WWTP & SPF
IMPROVEMENTS PACKAGE II

ELECTRICAL DETAILS
LIGHT STANCHIONS &
EQUIPMENT Rracks

FILE NO:	–
WBS: R-000298-0005-4	
DRAWING SCALE	3/16" = 1'-0"
CITY OF HOUSTON PM	IRAJ RANJBAR, P.E.
DWG NO. :	E-401
SHEET NO. 125 OF 147	

PUBLIC WORKS AND ENGINEERING
ACCEPTED & FILED
49061-4
CITY DRAWING NUMBER
HOUSTON, TEXAS

C:\115805 Almeda Sims Package II\Cadd Dwgs\E-401 Light Stanchions & Equip Racks.dwg Sep 21,2011 - 9:44am RPD

COLOR TABLE:

ORIGINAL SCALE IN INCHES
FOR REDUCED PLANS
0 1 2 3

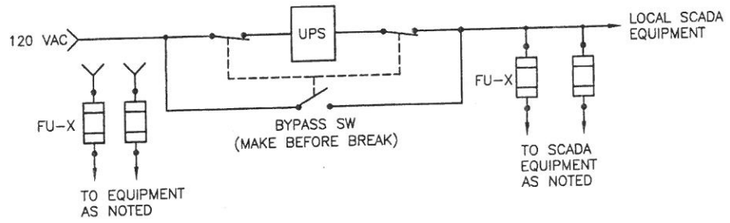

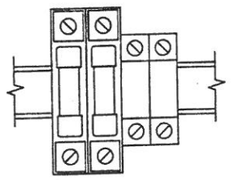

1. PROVIDE AND INSTALL DIN RAIL MOUNTED FUSE HOLDERS AND NEUTRAL CONDUCTOR TERMINAL BLOCKS TO ACCOMMODATE UPS POWER TO SCADA EQUIPMENT AND 120 VOLT CONTROL POWER TO ANCILLARY DEVICES SUCH AS SOLENOIDS.
2. PROVIDE INDIVIDUAL, TYPE FNQ TIME DELAY FUSES, FOR UPS CIRCUITS GOING TO REMOTE SCADA EQUIPMENT LOCATIONS.
3. PROVIDE INDIVIDUAL, TYPE FNQ TIME DELAY FUSES, FOR EACH ANCILLARY DEVICE.

120 VOLT CONTROL POWER DISTRIBUTION TABLE						
FUSE LOCATION	POWER SOURCE	TAG #	LOAD SERVED	FUSE NUMBER	FUSE RATING	
CR BREAKER 2C-LV 1	2C-LV 1	INTERNAL	CP 200 UPS VIA BYPASS SWITCH		20A CB	
CP 200 CABINET	2C-LV 1	2C-11	CP 300 FLOW XMITTER	FU-1	5A	
CP 200 CABINET	2C-LV 1	2C-P27	SLUDGE TANK FLOW XMITTER	FU-2	5A	
CP 200 CABINET	2C-LV 1	2C-C13A	WEST AIR FLOW METER	FU-3	5A	
CP 200 CABINET	2C-LV 1	2C-C14A	EAST AIR FLOW METER	FU-4	5A	
CP 200 CABINET	CP 200 UPS	2C-11	CP 300 REMOTE I/O	FU-5	5A	
CP 200 CABINET	CP 200 UPS	INTERNAL	CP 200 PLC EQUIPMENT	FU-6	5A	
CP 430 CABINET	120 VOLT PWR	WP-08	CP 600 FLOW XMITTER	FU-1	5A	
CP 430 CABINET	CP 430 UPS	WP-07	CP 600 REMOTE I/O	FU-2	5A	
CR BREAKER 3C-LV 9	3C-LV 9	INTERNAL	CP 3C UPS VIA BYPASS SWITCH	FU-1	20A CB	
CP 3C CABINET	3C-LV 9	3C-P32	CP 710 REMOTE I/O	FU-2	10A	
CP 3C CABINET	CP 3C UPS	3C-P32	CP 700 REMOTE I/O	FU-3	5A	
CP 3C CABINET	CP 3C UPS	3C-P32	CP 710 REMOTE I/O	FU-4	5A	
CP 3C CABINET	CP 3C UPS	INTERNAL	CP 3C REMOTE I/O	FU-5	5A	
CP 710 CABINET	CP 3C CABINET FUSE FU-2	3C-C10	CONVEYOR WASH DOWN SOLENOID	FU-1	5A	
CP 710 CABINET		3C-C04A	ROTARY SCREEN #1 LUBE PUMP	FU-2	5A	
CP 710 CABINET		3C-C04A	ROTARY SCREEN #1 SOLENOIDS	FU-3	5A	
CP 710 CABINET		3C-C05A	ROTARY SCREEN #2 LUBE PUMP	FU-4	5A	
CP 710 CABINET		3C-C05A	ROTARY SCREEN #2 SOLENOIDS	FU-5	5A	
CP 710 CABINET	CP 3C CABINET FUSE FU-2	**3C-C14**	**ROTARY SCREEN #3 LUBE PUMP**	**FU-6**	**5A**	**TO BE INSTALLED IN PACKAGE II**
CP 710 CABINET		**3C-C14A**	**ROTARY SCREEN #3 SOLENOIDS**	**FU-7**	**5A**	

120 VOLT CONTROL POWER PROTECTION (1 / E-402)

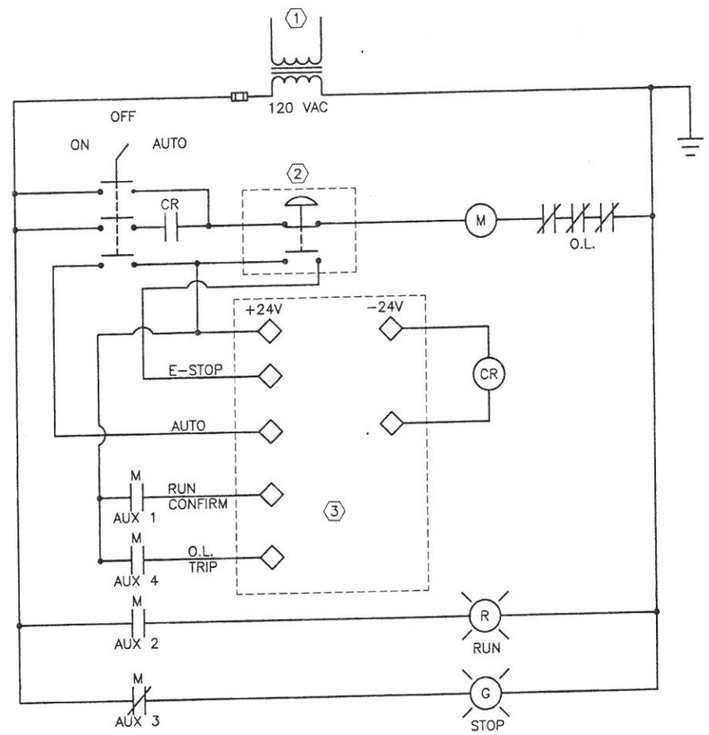

SWITCH STATUS TABLE

OPERATOR POSITION			
CONTACT A	ON	X	X
CONTACT B	X	X	ON
CONTACT C	X	X	ON

SWITCH LEGEND PLATE

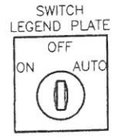

KEYED NOTES:
1. INTERNAL CONTROL TRANSFORMER
2. REMOTE E-STOP PUSHBUTTON OR LANYARD TYPE MECHANISM AS REQUIRED - SEE DRAWINGS
3. PLC OR REMOTE I/O BLOCK - SEE INSTRUMENTATION DRAWINGS FOR WIRE AND TERMINAL ASSIGNMENTS.

TYPICAL MCC FVNR MOTOR STARTER CONTROL WIRING (2 / E-402)

No.	Date	Revisions	App.

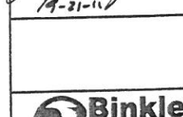

Binkley & Barfield, Inc
consulting engineers
Texas Registration Number F-257
1710 Seamist Drive
Houston, Texas 77008-3189
(713) 869-3433

SURVEYED BY: AMANI ENG. | FIELD BOOK NO. : P-5486

CITY OF HOUSTON
DEPARTMENT OF PUBLIC WORKS AND ENGINEERING

ALMEDA SIMS WWTP & SPF IMPROVEMENTS PACKAGE II

ELECTRICAL DETAILS - CONTROL SCHEMATICS

FILE NO:	–
WBS: R-000298-0005-4	
DRAWING SCALE	3/16" = 1'-0"
CITY OF HOUSTON PM	IRAJ RANJBAR, P.E.
DWG NO. :	E-402
SHEET NO. 126 OF 147	

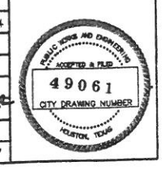

G:\115805 Almeda Sims Package II\Cadd Dwgs\ E-402 Details – Control Schematics.dwg Sep 21,2011 – 9:49am RPD
COLOR TABLE:
ORIGINAL SCALE IN INCHES FOR REDUCED PLANS
0 1 2 3

G:\115805 Almeda Sims Package II\Cadd Dwgs\E-500 MCC-2C 'A' One Line Diagram.dwg Sep 21,2011 - 9:51am RPD

COLOR TABLE:

ORIGINAL SCALE IN INCHES
FOR REDUCED PLANS
0 1 2 3

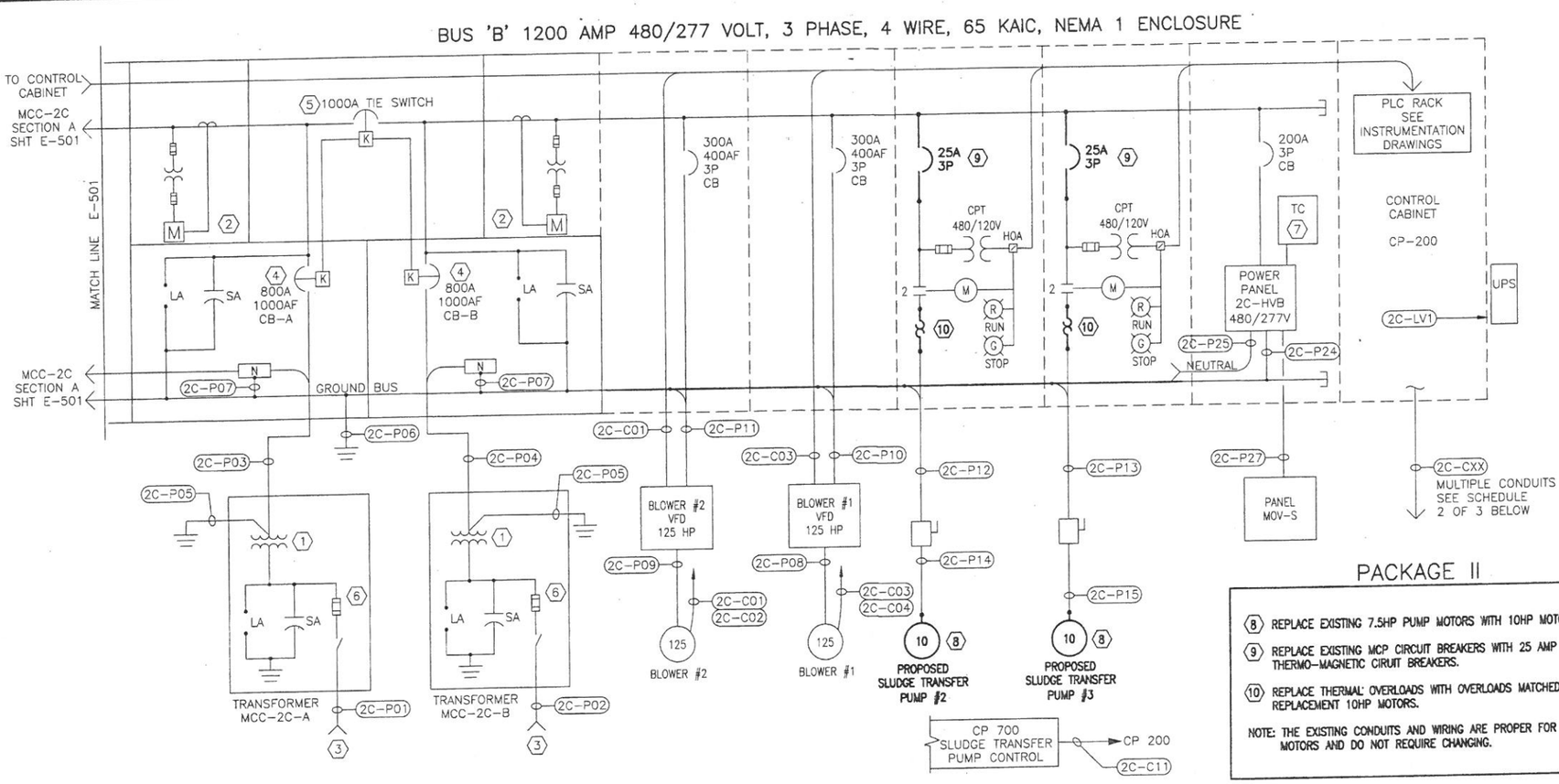

PACKAGE II

(8) REPLACE EXISTING 7.5HP PUMP MOTORS WITH 10HP MOTORS.

(9) REPLACE EXISTING MCP CIRCUIT BREAKERS WITH 25 AMP THERMO-MAGNETIC CIRUIT BREAKERS.

(10) REPLACE THERMAL OVERLOADS WITH OVERLOADS MATCHED TO REPLACEMENT 10HP MOTORS.

NOTE: THE EXISTING CONDUITS AND WIRING ARE PROPER FOR 10HP MOTORS AND DO NOT REQUIRE CHANGING.

MCC-2C SECTION B - PROPOSED SLUDGE TRANSFER PUMP UPGRADE

LOCATION - SLUDGE HOLDING TANK ELECTRICAL EQUIPMENT ROOM

MCC - 2C CONDUIT and CABLE SCHEDULE 1 OF 3

CONDUIT TAG No.	CABLE TYPE & QUANTITY	CONDUIT SIZE	VOLTAGE	FROM	TO	COMMENTS/REMARKS
2C-P01	3 x #1 15 KV CABLE	2 x 4" (1 IS SPARE)	12.47 KV	SLUDGE PROCESSING BUILDING MAIN SWITCHGEAR	TRANSFORMER MCC-2C-A	SEE DRAWING E-401
2C-P02	3 x #1 15 KV CABLE	2 x 4" (1 IS SPARE)	12.47 KV	SLUDGE PROCESSING BUILDING MAIN SWITCHGEAR	TRANSFORMER MCC-2C-B	SEE DRAWING E-401
2C-P03	2 PARALLEL SETS 3 x 500 Kcmil, 1/0 NEUTRAL	2 x 4"	480	TRANSFORMER MCC-2C-A	MCC-2C SECTION 'A'	
2C-P04	2 PARALLEL SETS 3 x 500 Kcmil, 1/0 NEUTRAL	2 x 4"	480	TRANSFORMER MCC-2C-B	MCC-2C SECTION 'B'	
2C-P05	2/0 BARE	PER DRAWINGS	Ground Potential	PADMOUNT TRANSFORMERS	GROUNDING ELECTRODE SYSTEM	
2C-P06	2/0 BARE	INTERNAL TO MCC	Ground Potential	MCC-2C GROUND BUS	GROUNDING ELECTRODE SYSTEM	SEE DRAWING E-602, DETAIL 2
2C-P07	2/0 BARE	INTERNAL TO MCC	Ground Potential	NEUTRAL BARS	GROUND BUS	MAIN BONDING JUMPERS
2C-P08	3 x 3/0, #4 GND	2"	480 VOLTS VARIABLE FREQUENCY	VFD #1 MCC-2C SECTION B	BLOWER #1	
2C-P09	3 x 3/0, #4 GND	2"	480 VOLTS VARIABLE FREQUENCY	VFD #2 MCC-2C SECTION B	BLOWER #2	
2C-P10	3 x 3/0	INTERNAL TO MCC	480	MCC-2C SECTION 'B' CIRCUIT BREAKER	VFD #1 MCC-2C SECTION B	
2C-P11	3 x 3/0	INTERNAL TO MCC	480	MCC-2C SECTION 'B' CIRCUIT BREAKER	VFD #2 MCC-2C SECTION B	
2C-P12	3 x #10, #10 GND	1-1/2"	480	SLUDGE TRANSFER PUMP #2 STARTER	SLUDGE TRANSFER PUMP #2 DISCONNECT SWITCH	
2C-P13	3 x #10, #10 GND	1-1/2"	480	SLUDGE TRANSFER PUMP #3 STARTER	SLUDGE TRANSFER PUMP #3 DISCONNECT SWITCH	
2C-P14	3 x #10, #10 GND	3/4"	480	SLUDGE TRANSFER PUMP #2 DISCONNECT SWITCH	SLUDGE TRANSFER PUMP #2	
2C-P15	3 x #10, #10 GND	3/4"	480	SLUDGE TRANSFER PUMP #3 DISCONNECT SWITCH	SLUDGE TRANSFER PUMP #3	
2C-P27	3 x #4, #4 GND 2 x #12, #12 GND	4"	480	PANEL 2C HVB	PANEL MOV-S	PANEL MOV-S FEEDER CIRCUIT & 120 CIRCUIT FROM 2C-LV 1 VIA CP 200. SEE DWG E-604, DETAIL 2.

MCC - 2C CONDUIT and CABLE SCHEDULE 2 OF 3

CONDUIT TAG No.	CABLE SIZE & QUANTITY	CONDUIT SIZE	VOLTAGE	FROM	TO	COMMENTS/REMARKS
2C-C01	PROFIBUS	2"	DIGITAL DATA	BLOWER #2 LOCAL PLC	VFD #2	VIA MASTER PLC CP 200 CONTROL CABINET
2C-C02	ETHERNET		DIGITAL DATA	BLOWER #2 LOCAL PLC	MASTER PLC CP 200	
2C-C03	PROFIBUS	2"	DIGITAL DATA	BLOWER #1 LOCAL PLC	VFD #1	VIA MASTER PLC CP 200 CONTROL CABINET
2C-C04	ETHERNET		DIGITAL DATA	BLOWER #1 LOCAL PLC	MASTER PLC CP 200	
2C-C09	8 x 8 PAIR #16 CONTROL CABLES	4"	CONTROL SIGNALS	CONTROL CABINET CP 200	NORTH SIDE MOTOR OPERATED VALVES	INSTALL LEVEL DETECTOR CABLES 2C-C15 & 2C-C16 WITH MOV CONTROL CABLES
2C-C10	7 x 6 PAIR #16 CONTROL CABLES	4"	CONTROL SIGNALS	CONTROL CABINET CP 200	SOUTH SIDE MOV'S & FLOW XMITTER @ SE CORNER OF TANKS	
2C-10A	FACTORY CABLE BY MANUFACTURER	3/4"	SIGNAL	MAGNETIC FLOW METER	FLOW XMITTER @ SE CORNER OF TANKS	
2C-C11	PROFIBUS, 4 x #12, #12 GND	1-1/2"	DATA & 120 VOLTS	CONTROL CABINET CP 200	CP 300 AT SLUDGE TRANSFER PUMP SITE	SCADA AND 120 CIRCUITS FROM CP 200 UPS AND 2C-LV 1. SEE DWG E-604, DETAIL 2.
2C-C12	12 STRAND FIBER OPTIC CABLE PER SPECIFICATIONS	2 x 2" DUCTBANK	DATA	CONTROL CABINET CP 200	FIBER OPTIC PATCH PANEL TRUCK LOADING BLDG.	
2C-C13	2 PAIR #16	1"	SIGNAL	CONTROL CABINET CP 200	WEST AIR FLOW METER	FLOW METER (THERMAL DISPERSION TYPE)
2C-C13A	2 x #12, #12 GND	3/4"	120	CONTROL CABINET CP 200	WEST AIR FLOW METER	120 CIRCUIT FROM CP 200 UPS AND 2C-LV 1. SEE DWG E-604, DETAIL 2.
2C-C14	2 PAIR #16	1"	SIGNAL	CONTROL CABINET CP 200	EAST AIR FLOW METER	FLOW METER (THERMAL DISPERSION TYPE)
2C-C14A	2 x #12, #12 GND	3/4"	120	CONTROL CABINET CP 200	EAST AIR FLOW METER	120 CIRCUIT FROM CP 200 UPS AND 2C-LV 1. SEE DWG E-604, DETAIL 2.
2C-C15	2 PAIR #16	1"	SIGNAL	CONTROL CABINET CP 200	WEST LEVEL DETECTOR	INSTALL LEVEL DETECTOR CABLES WITH MOV CONTROL CABLES 2C-C09
2C-C16	2 PAIR #16	1"	SIGNAL	CONTROL CABINET CP 200	EAST LEVEL DETECTOR	INSTALL LEVEL DETECTOR CABLES WITH MOV CONTROL CABLES 2C-C09

NOTES TO CONDUIT/CABLE SCHEDULES: 2C-PXX DENOTES POWER, 2C-CXX DENOTES CONTROL

KEYED NOTES:

(1) 500 KVA, 12,470 VOLT TO 480/277 VOLT PADMOUNT TRANSFORMER WITH INTERNAL FUSES, SURGE AND LIGHTNING PROTECTION.

(2) DIGITAL PANEL METERS.

(3) FROM 12,470 VOLT ELECTRICAL SWITCHGEAR IN SLUDGE PROCESSING BUILDING. SEE DRAWINGS E-400 & E-401

(4) 1000 AMP FRAME CIRCUIT BREAKER WITH 800 AMP RATING PLUG. 100% RATED

(5) 1000 AMP MOLDED CASE SWITCH. NO OCP REQUIRED.

(6) CLASS E, 50 AMP, CURRENT LIMITING FUSE PER TRANSFORMER MANUFACTURER.

(7) PROVIDE AND INSTALL 277 VOLT, PROGRAMMABLE TIME CLOCK WITH BATTERY BACKUP FOR CONTROL OF BLOWER ROOM LIGHTING. TIME CLOCK TO PROVIDE SWITCHED LEG DERIVED FROM CIRCUIT 'HVB-8'

No.	Date	Revisions	App.

STATE OF TEXAS
LARRY M. BARFIELD
39337
REGISTERED PROFESSIONAL ENGINEER
9-21-11

Binkley & Barfield, Inc
consulting engineers
Texas Registration Number F-257
1710 Seamist Drive
Houston, Texas 77008-3189
(713) 869-3433

SURVEYED BY: AMANI ENG. | FIELD BOOK NO. : P-5485

CITY OF HOUSTON
DEPARTMENT OF PUBLIC WORKS AND ENGINEERING

ALMEDA SIMS WWTP & SPF IMPROVEMENTS PACKAGE II
UPSIZING OF SLUDGE TRANSFER PUMPS
MCC-2C ONE-LINE DIAGRAM & DETAILS, SHEET 1 OF 2

FILE NO:	-
WBS: R-000298-0005-4	
DRAWING SCALE	
NTS	
CITY OF HOUSTON PM	
IRAJ RANJBAR, P.E.	
DWG NO. :	E-500
SHEET NO. 127 OF 147	

PUBLIC WORKS AND ENGINEERING
ACCEPTED & FILED
49061
CITY DRAWING NUMBER
HOUSTON, TEXAS

G:\115805 Almeda Sims Package II\Cadd Dwgs\E-501 MCC-2C 'B' One Line Diagram.dwg Sep 21,2011 - 9:22am RPD

PACKAGE II

(3) REPLACE EXISTING 7.5HP PUMP MOTOR WITH 10HP MOTOR.

(4) REPLACE EXISTING MCP CIRCUIT BREAKER WITH 25 AMP THERMO-MAGNETIC CIRUIT BREAKER.

(5) REPLACE THERMAL OVERLOADS WITH OVERLOADS MATCHED TO REPLACEMENT 10HP MOTOR.

NOTE: THE EXISTING CONDUITS AND WIRING ARE PROPER FOR 10HP MOTORS AND DO NOT REQUIRE CHANGING.

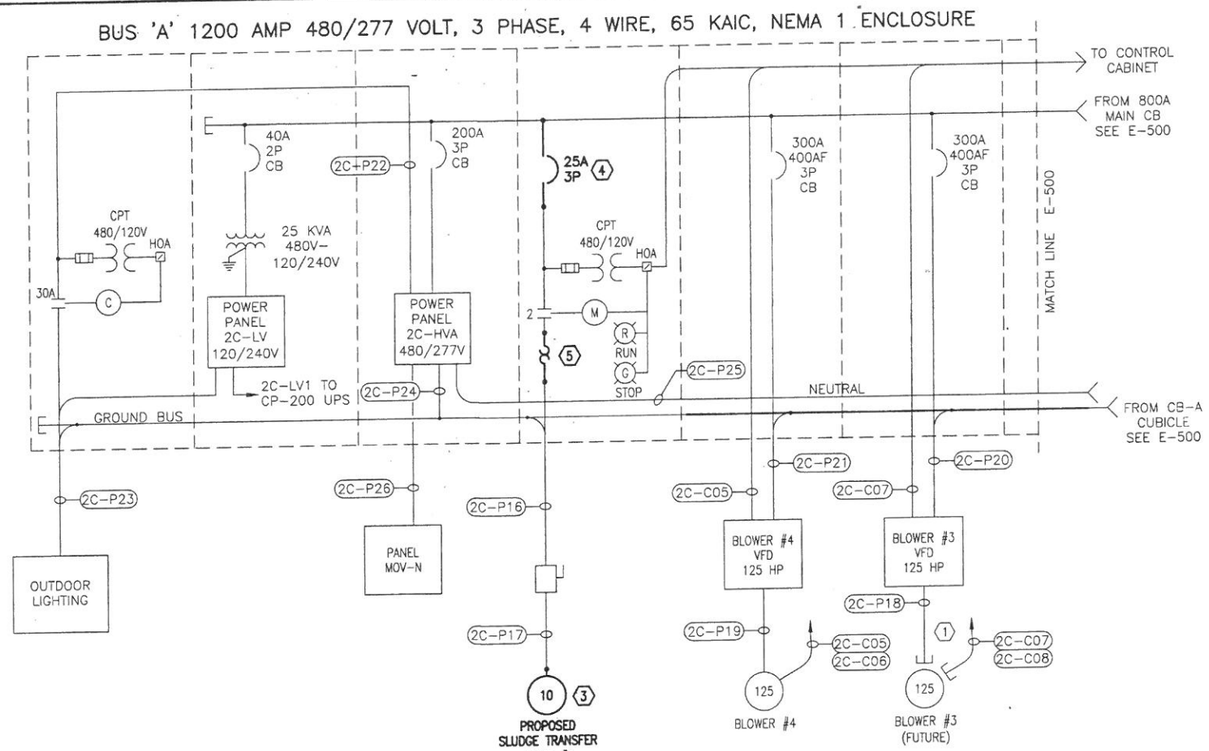

MCC-2C SECTION A - PROPOSED SLUDGE TRANSFER PUMP UPGRADE

LOCATION - SLUDGE HOLDING TANK ELECTRICAL EQUIPMENT ROOM

KEYED NOTES:

(1) PROVIDE & CAP CONDUITS FOR THE CONNECTION OF FUTURE BLOWER #3

MCC - 2C CONDUIT and CABLE SCHEDULE 3 OF 3

CONDUIT TAG No.	CABLE SIZE & QUANTITY	CONDUIT SIZE	VOLTAGE	FROM	TO	COMMENTS/REMARKS
2C-P16	3 x #10, #10 GND	1-1/2"	480	SLUDGE TRANSFER PUMP #1 STARTER	SLUDGE TRANSFER PUMP #1 DISCONNECT SWITCH	
2C-P17	3 x #10, #10 GND	3/4"	480	SLUDGE TRANSFER PUMP #1 DISCONNECT SWITCH	SLUDGE TRANSFER PUMP #1	
2C-P18	3 x 3/0, #4 GND	2"	480 VOLTS VARIABLE FREQUENCY	VFD #3 MCC-2C SECTION A	BLOWER #3 (FUTURE)	CONDUIT ONLY AT THIS TIME
2C-P19	3 x 3/0, #4 GND	2"	480 VOLTS VARIABLE FREQUENCY	VFD #4 MCC-2C SECTION A	BLOWER #4	
2C-P20	3 x 3/0	INTERNAL TO MCC	480	MCC-2C SECTION 'A' CIRCUIT BREAKER	VFD #3 MCC-2C SECTION B	
2C-P21	3 x 3/0	INTERNAL TO MCC	480	MCC-2C SECTION 'A' CIRCUIT BREAKER	VFD #4 MCC-2C SECTION B	
2C-P22	3 x #12 #12 NEUTRAL	INTERNAL TO MCC	480/277	PANEL 2C HVA	LIGHTING CONTACTOR	
2C-P23N	2 x #12, #12 GND (LTG) 2 x #8, #8 GND (RECPT)	1-1/2"	277 & 120	LIGHTING CONTACTOR AND PANEL 2C-LV	OUTSIDE LIGHTING STANCHIONS	277 VOLTS FROM 2C-HVA 13 VIA LTG CONTACTOR. 120 VOLTS FROM 2C-LV 8
2C-P23S	2 x #12, #12 GND (LTG) 2 x #8, #8 GND (RECPT)	1-1/2"	277 & 120	LIGHTING CONTACTOR AND PANEL 2C-LV	OUTSIDE LIGHTING STANCHIONS	277 VOLTS FROM 2C-HVA 13 VIA LTG CONTACTOR. 120 VOLTS FROM 2C-LV 10
2C-P24	#4	INTERNAL TO MCC	GND POTENTIAL	PANEL 2C HVA	MCC 2C GROUND BUS	
2C-P25	#4	INTERNAL TO MCC	GND POTENTIAL	PANEL 2C HVA	MCC 2C NEUTRAL BAR	
2C-P26	3 x #4, #4 GND	4"	480	PANEL 2C HVA	PANEL MOV-N	NORTH SIDE MOV POWER
2C-C05	PROFIBUS	2"	DIGITAL DATA	BLOWER #4 LOCAL PLC	VFD #4	VIA MASTER PLC CP 200 CONTROL CABINET
2C-C06	ETHERNET		DIGITAL DATA	BLOWER #4 LOCAL PLC	MASTER PLC CP 200	
2C-C07	PROFIBUS CONDUIT ONLY AT THIS TIME	2"	DIGITAL DATA	BLOWER #3 LOCAL PLC	VFD #3	VIA MASTER PLC CP 200 CONTROL CABINET
2C-C08	ETHERNET CONDUIT ONLY AT THIS TIME		DIGITAL DATA	BLOWER #3 LOCAL PLC	MASTER PLC CP 200	

NOTES:

3C-PXX DENOTES POWER
3C-CXX DENOTES CONTROL

ELECTRICAL LOAD ANALYSIS MCC-2C

LOAD DESCRIPTION	SECTION 'A' CONNECTED LOAD AMPS @ 480/277V	SECTION 'A' MULT.	SECTION 'A' NEC LOAD AMPS @ 480/277V	SECTION 'B' CONNECTED LOAD AMPS @ 480/277V	SECTION 'B' MULT.	SECTION 'B' NEC LOAD AMPS @ 480/277V	TOTAL LOAD CONNECTED LOAD AMPS @ 480/277V	TOTAL LOAD MULT.	TOTAL LOAD NEC LOAD AMPS @ 480/277V
125 HP AERATION BLOWERS (4)	312.0	1.00	312.0	312.0	1.00	312.0	* 468.0	1.00	468.0
ANCILLARY BLOWER LOADS (4)	15.0	1.00	15.0	30.0	1.00	30.0	* 45.0	1.00	45.0
10 HP SLUDGE TRANSFER PUMPS (3)	**14.0**	**1.00**	**14.0**	**28.0**	**1.00**	**28.0**	**42.0**	**1.00**	**42.0**
MOV'S	42.0	1.00	42.0	42.0	1.00	42.0	84.0	1.00	84.0
AIR CONDITIONER	5.0	1.00	5.0	0.0	1.00	0.0	5.0	1.00	5.0
EXHAUST FANS (2)	3.4	1.00	3.4	3.4	1.00	3.4	6.8	1.00	6.8
5 TON HOIST (5.5 HP)	8.4	1.00	8.4		1.00	0.0	8.4	1.00	8.4
		1.00	0.0	1.1	1.00	1.1	1.1	1.00	1.1
INTERIOR LIGHTING		1.25	0.0	6.6	1.25	8.3	6.6	1.00	6.6
EXTERIOR LIGHTING	20.4	1.25	25.5		1.25	0.0	20.4	1.00	20.4
LARGEST MOTOR @ 25%	156.0	0.25	39.0	156.0	0.25	39.0	156.0	0.25	39.0
	SECTION 'A' LOAD		464.3	SECTION 'B' LOAD		463.8	TOTAL LOAD		726.3

* BLOWERS ARE INTERLOCKED SO THAT ONLY 3 CAN RUN AT ANY TIME

TOTAL LOAD = 726.3 AMPS

No.	Date	Revisions	App.

STATE OF TEXAS
LARRY M. BARFIELD
39337
REGISTERED PROFESSIONAL ENGINEER
9/21/11

Binkley & Barfield, Inc
consulting engineers
Texas Registration Number F-257
1710 Seamist Drive
Houston, Texas 77008-3189
(713) 869-3433

SURVEYED BY: AMANI ENG. | FIELD BOOK NO. : P-5486

CITY OF HOUSTON
DEPARTMENT OF PUBLIC WORKS AND ENGINEERING

ALMEDA SIMS WWTP & SPF IMPROVEMENTS PACKAGE II
UPSIZING OF SLUDGE TRANSFER PUMPS
MCC-2C ONE-LINE DIAGRAM & DETAILS, SHEET 2 OF 2

FILE NO:	-
WBS: R-000298-0005-4	
DRAWING SCALE	NTS
CITY OF HOUSTON PM	IRAJ RANJBAR, P.E.
DWG NO. :	E-501
SHEET NO. 128 OF 147	

PUBLIC WORKS AND ENGINEERING ACCEPTED & FILED 49061 CITY DRAWING NUMBER HOUSTON, TEXAS

COLOR TABLE:

ORIGINAL SCALE IN INCHES FOR REDUCED PLANS
0 1 2 3

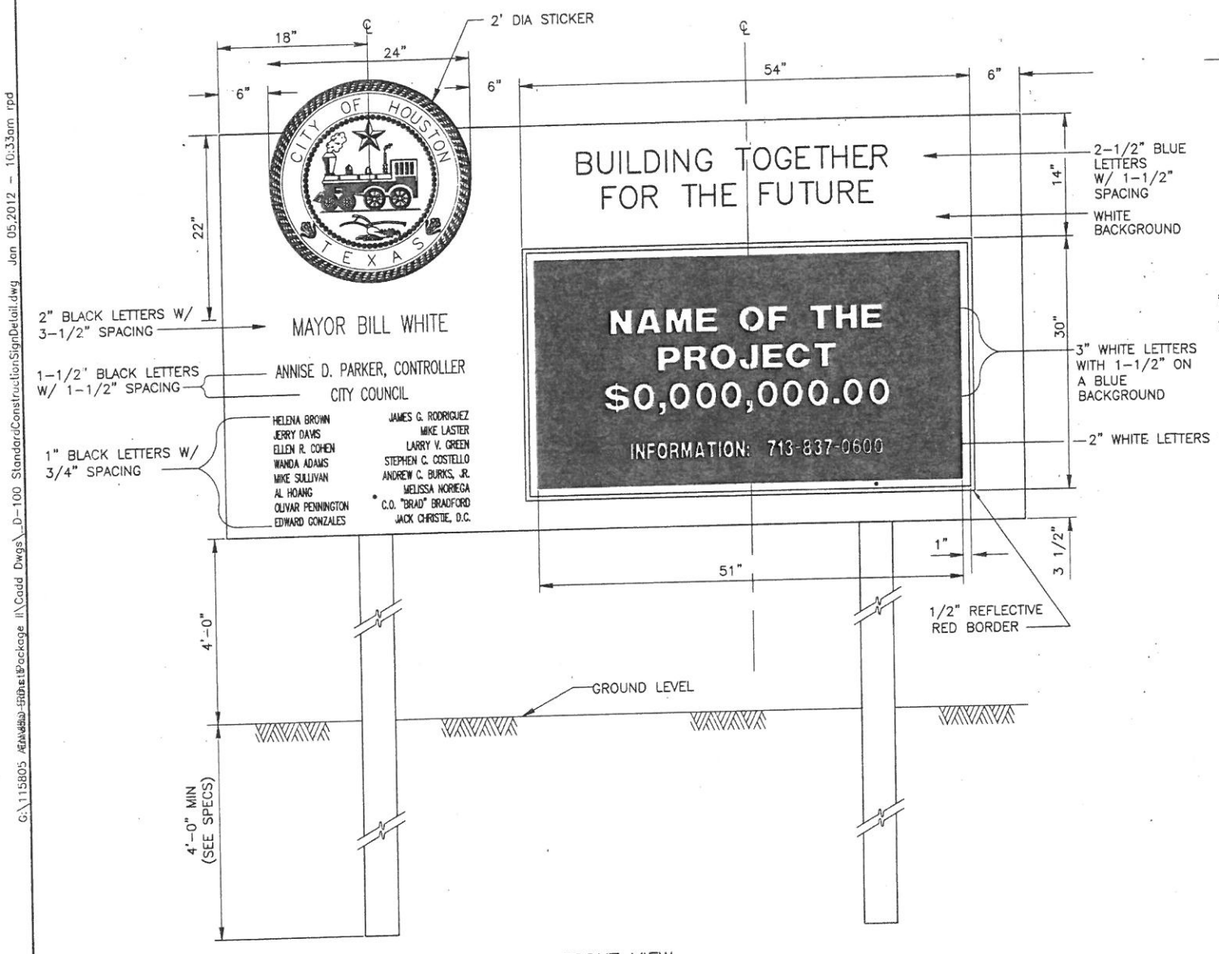

FRONT VIEW

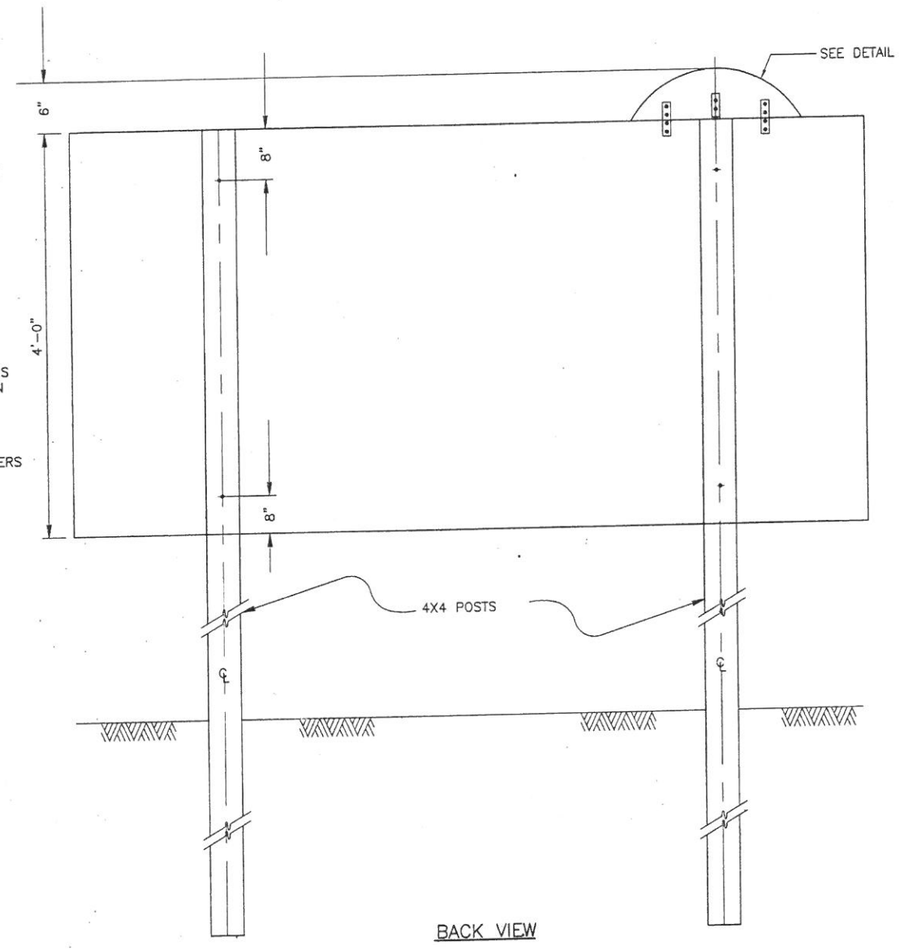

BACK VIEW

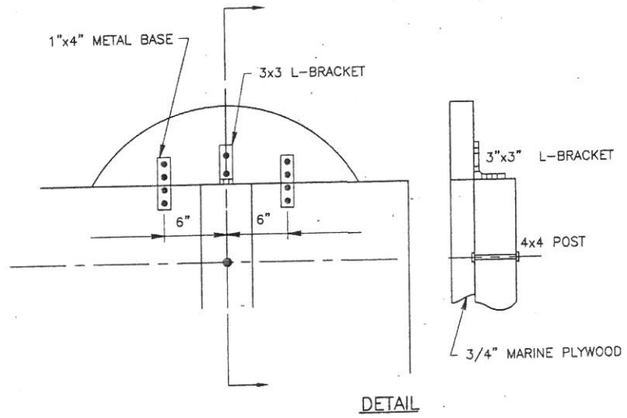

DETAIL

PROJECT SIGN 9
SCALE: NO SCALE

NOTES:

1. 2' x 2" x 4" SUPPORTS FASTENED WITH 1/2"ϕ x 3 1/2" BUTTON HEAD CARRIAGE BOLTS, NUTS AND FLAT WASHERS.
2. 4" x 4" POSTS FASTENED TO SIGN WITH 1/2"ϕ x 5 1/2" BUTTON HEAD CARRIAGE BOLTS, NUTS AND FLAT WASHERS.

No.	Date	Revisions	App.

STATE OF TEXAS
LI CHUNG CHEN
98576
REGISTERED PROFESSIONAL ENGINEER
1-9-2012

Binkley & Barfield, Inc
consulting engineers
Texas Registration Number F-257
1710 Seamist Drive
Houston, Texas 77008-3189
(713) 868-3433

SURVEYED BY: AMANI ENG. | FIELD BOOK NO. : P-5486

CITY OF HOUSTON
DEPARTMENT OF PUBLIC WORKS AND ENGINEERING

ALMEDA SIMS WWTP & SPF IMPROVEMENTS PACKAGE II

STANDARD CONSTRUCTION SIGN DETAIL

FILE NO:	–
WBS:	R-000298-0005-4
DRAWING SCALE	NO SCALE
CITY OF HOUSTON PM	IRAJ RANJBAR, P.E.
DWG NO. :	D-100
SHEET NO.	129 OF 147

PUBLIC WORKS AND ENGINEERING ACCEPTED & FILED
49061
CITY DRAWING NUMBER
HOUSTON, TEXAS

G:\115805 ALMEDA-SIMS\Package II\Cadd Dwgs\D-100 StandardConstructionSignDetail.dwg Jan 05,2012 - 10:33am rpd

COLOR TABLE:

ORIGINAL SCALE IN INCHES FOR REDUCED PLANS
0 1 2 3

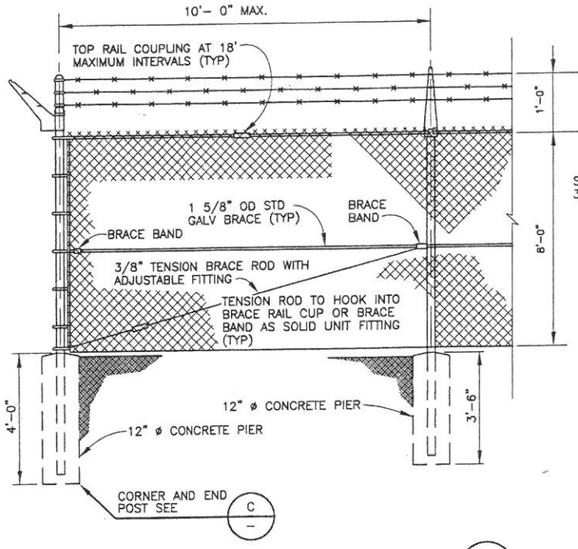

CORNER AND LINE POST CONNECTION 1

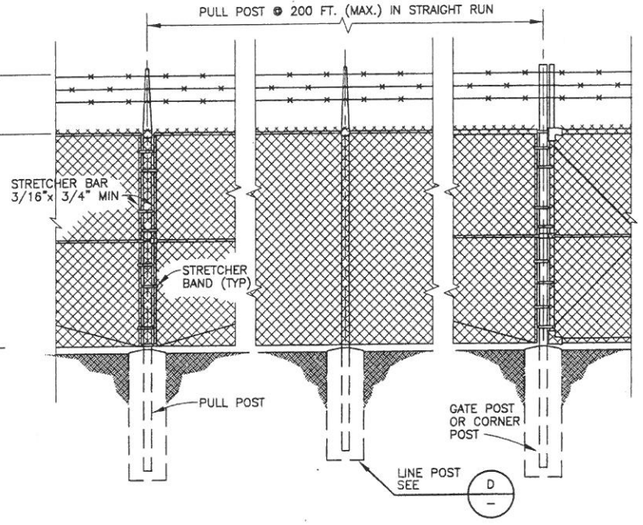

STRAIGHT RUN DETAIL 2

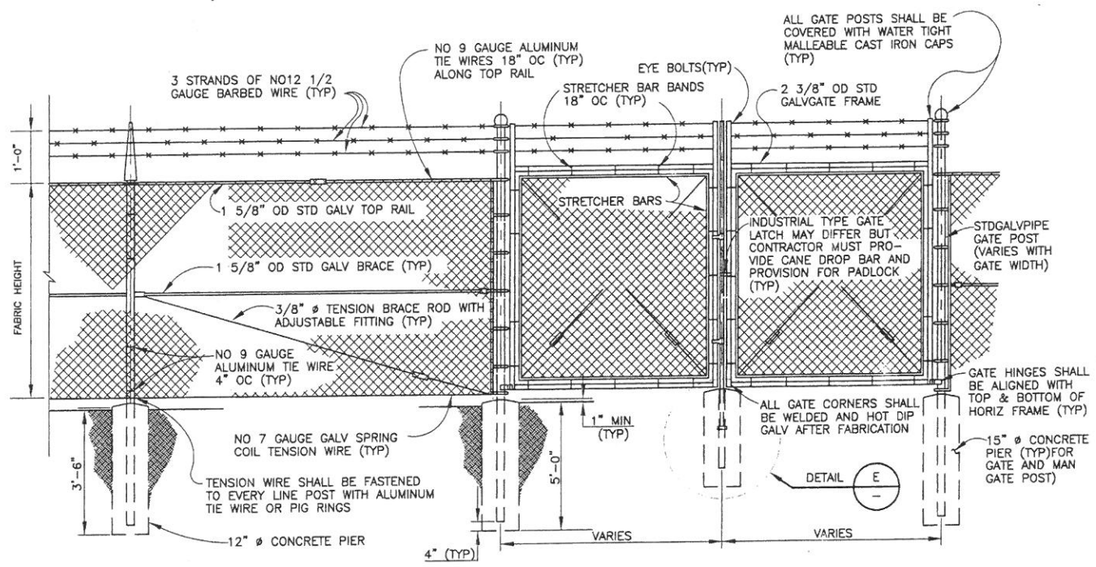

SWINGING GATE DETAIL 3

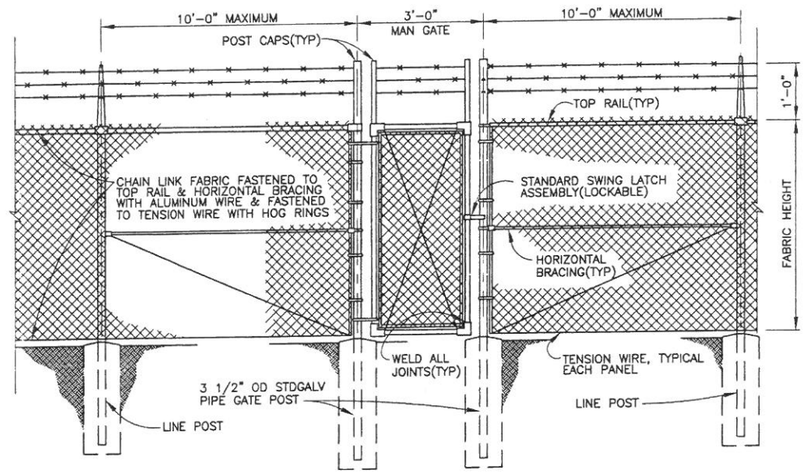

PERSONNEL GATE DETAIL 4

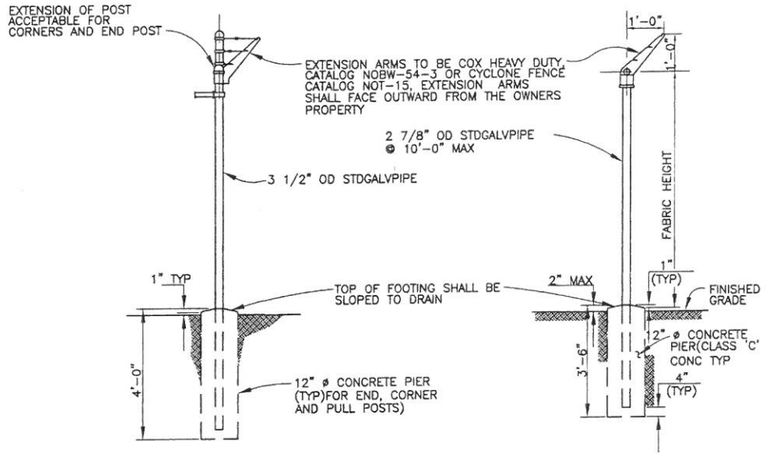

CORNER, PULL AND END POST DETAIL C

LINE POST DETAIL D

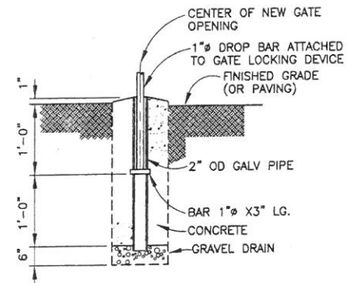

PLUNGER DETAIL E

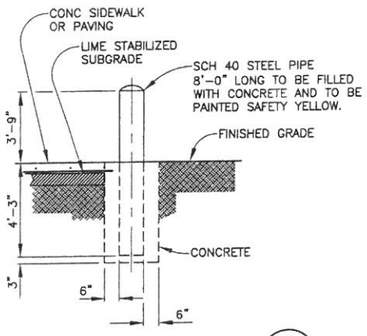

PIPE BOLLARD (GUARD) DETAIL 61

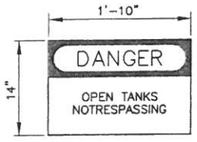

WARNING SIGN 5
100' SPACING MAX. ON FENCE

FENCE DETAILS 60

No.	Date	Revisions	App

STATE OF TEXAS
LI CHUNG CHEN
98576
REGISTERED PROFESSIONAL ENGINEER
9-21-2011

Binkley & Barfield, Inc
consulting engineers
Texas Registration Number F-257
1710 Seamist Drive
Houston, Texas 77008-3189
(713) 869-3433

SURVEYED BY: AMANI ENG. FIELD BOOK NO. : P-5486

CITY OF HOUSTON
DEPARTMENT OF PUBLIC WORKS AND ENGINEERING

ALMEDA SIMS WWTP & SPF IMPROVEMENTS PACKAGE II

FENCE AND GATE DETAILS

FILE NO:	-
WBS: R-000298-0005-4	
DRAWING SCALE	NOSCALE
CITY OF HOUSTON PM	IRAJ RANJBAR, P.E.
DWG NO. :	D-101
SHEET NO. 130 OF 147	

PUBLIC WORKS AND ENGINEERING ACCEPTED & FILED 49061 CITY DRAWING NUMBER HOUSTON, TEXAS

COLOR TABLE:

ORIGINAL SCALE IN INCHES FOR REDUCED PLANS
0 1 2 3

G:\115805\Working Files\Construction Package II\Cadd Dwgs_D-101 Standard Fences and Gates Details.dwg Sep 22,2011 - 10:06am RPD

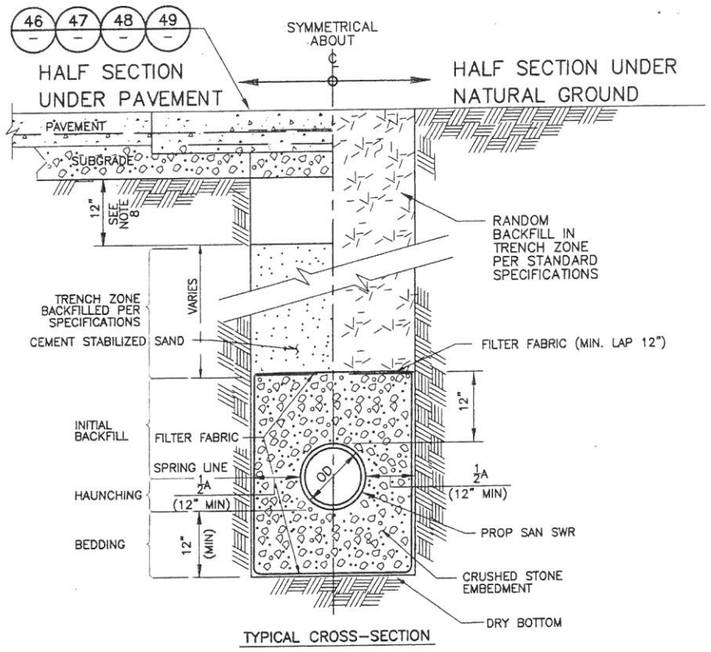

TYPICAL CROSS-SECTION

BEDDING AND BACKFILL OF PIPE UNDER PAVEMENT STRUCTURES AND IN OTHER IMPROVED AREAS FOR DRY OR WET STABLE TRENCH — 11

COH STANDARD DETAIL 02317-01C
EFFECTIVE DATE JULY 1, 1997

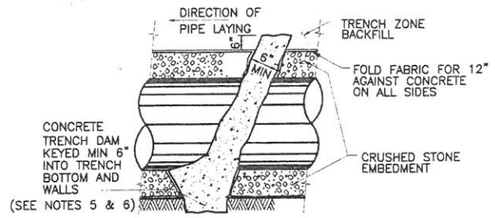

OPEN CUT LONGITUDINAL SECTION ALONG PIPE ℄ AT EMBEDMENT TRENCH DAM — 12

COH STANDARD DETAIL 02317-01C
EFFECTIVE DATE JULY 1, 1997

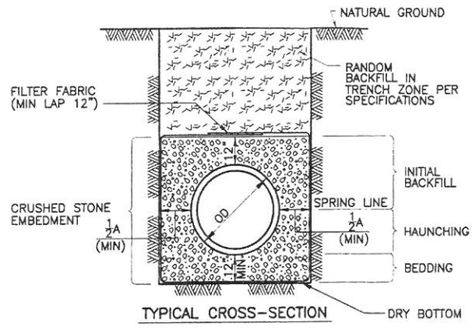

TYPICAL CROSS-SECTION

BEDDING AND BACKFILL OF PIPE NOT UNDER PAVEMENT FOR DRY OR WET STABLE TRENCH — 14

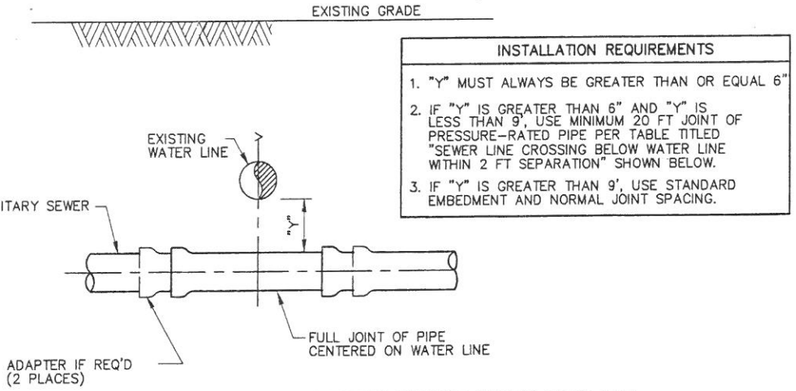

NEW SANITARY SEWER CROSSING EXISTING WATER LINE

INSTALLATION REQUIREMENTS

1. "Y" MUST ALWAYS BE GREATER THAN OR EQUAL 6"
2. IF "Y" IS GREATER THAN 6" AND "Y" IS LESS THAN 9', USE MINIMUM 20 FT JOINT OF PRESSURE-RATED PIPE PER TABLE TITLED "SEWER LINE CROSSING BELOW WATER LINE WITHIN 2 FT SEPARATION" SHOWN BELOW.
3. IF "Y" IS GREATER THAN 9', USE STANDARD EMBEDMENT AND NORMAL JOINT SPACING.

INSTALLING SANITARY SEWERS CROSSING WATER LINES — 13

SEE NOTES 9, 10, 11, 12, & 13

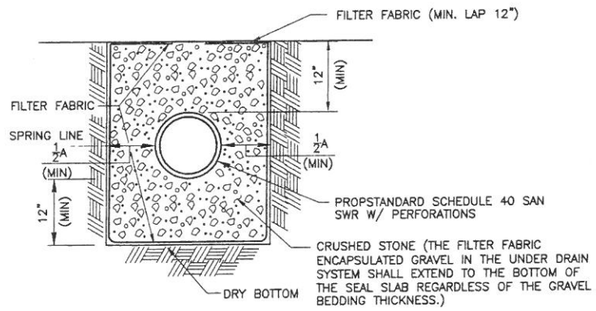

TYPICAL CROSS-SECTION

UNDERDRAIN DETAILS — 15

SEWER LINE CROSSING BELOW WATER LINE WITHIN 2 FT SEPARATION		
GRAVITY SANITARY SEWER PIPE SIZE	PRESSURE-RATED PIPE SIZE & TYPE (NOTE 8)	ADAPTERS REQUIRED
6" TO 12" (ASTM D-3034)	SAME SIZE ASTM D-2241, SDR 26	ASTM D-3034 TO D-2665 (SEWER TO D.W.V.) ADAPTER COUPLING
15" (ASTM D-3034)	14" LINED DUCTILE IRON OR AWWA C-905, DR-25	NONE REQUIRED
18" AND 24"	SAME SIZE AWWA C-905, PRESSURE-RATED FRP, OR LINED DUCTILE IRON, MANHOLE TO MANHOLE	NONE REQUIRED
21" AND 27"	PRESSURE PIPE NOT AVAILABLE. SEE CASING ALTERNATIVE	NOT APPLICABLE
30" AND LARGER	SAME SIZE PRESSURE-RATED FRP OR LINED DUCTILE IRON, MANHOLE TO MANHOLE	NOT APPLICABLE
CASING ALTERNATIVE: ANY SIZE AND TYPE	INSTALL AS CASING PIPE MIN 18 FT JOINT OF PRESSURE PIPE AT LEAST 2 NOMINAL SIZES LARGER THAN SAN. SEWER CARRIER PIPE. GROUT ANNULAR SPACE WITH TUNNEL GROUT	NOT APPLICABLE

NOTES:

1. EXCESS EXCAVATION SHALL BE BACKFILLED AT NO EXTRA COST TO THE CITY.
2. TRENCH SAFETY SHALL BE INSTALLED IN ACCORDANCE WITH TRENCH SAFETY SPECIFICATION SECTION.
3. MIN TRENCH WIDTH SHALL BE PIPE OD PLUS AN ALLOWANCE "A" FOR THE NOMINAL PIPE SIZE:

NOMINAL PIPE SIZE:	"A"
LESS THAN 18"	18"
18" TO 30"	24"
OVER 30"	36"

4. MAX TRENCH WIDTH SHALL BE NOT GREATER THAN MIN TRENCH WIDTH PLUS 24 INCHES, UNLESS OTHERWISE NOTED.
5. TRENCH DAM MAY BE FORMED OR UNFORMED. ACTUAL SHAPE OF CONCRETE TRENCH DAM ACROSS SECTION MAY BE DETERMINED BY CONTRACTOR IN FIELD, MEETING MINIMUM THICKNESS AND KEY DEPTH REQUIREMENTS.
6. TRENCH DAM SHALL BE PLACED AT LEAST 5 FT AWAY FROM ANY PIPELINE STRUCTURE. SEE SECTION 02317 FOR OTHER REQUIREMENTS.
7. PLACE TRENCH DAMS IN CLASS I EMBEDMENT AT THE MIDPOINT OF LINE SEGMENTS LONGER THAN 100 FT. BETWEEN MANHOLES.
8. SELECT BACKFILL FOR RIGID PAVEMENT: FLEXIBLE BASE MATERIAL FOR ASPHALT PAVEMENT.
9. SANITARY SEWER MUST BE BELOW WATER LINE WHEREVER POSSIBLE. WHEN WATER LINE IS BELOW THE SANITARY SEWER PROVIDE MINIMUM 2 FT SEPARATION AND INSTALL PIPE SAME AS FOR SEWER BELOW WATER.
10. WHEN PRESSURE-RATED PIPE IS REQUIRED, PROVIDE PIPE MINIMUM 150 psi PRESSURE RATING.
11. ADAPTERS MUST BE FACTORY MOLDED OR FABRICATED, WITH RING STIFFNESS AT LEAST EQUAL TO THE ADJOINING SANITARY SEWER PIPE, AND USING RESILIENT GASKET OR SEAL MATERIAL. FLEXIBLE RUBBER "BOOT" TYPE ADAPTERS WILL NOT BE ACCEPTED.
12. ALTERNATIVES MAY BE SHOWN ON THE DRAWINGS OR DESCRIBED IN THE SPECIFICATIONS.
13. SEPARATION REQUIREMENTS SHOWN HERE DO NOT APPLY TO SERVICE CONNECTIONS – REFER TO PLUMBING CODE FOR APPLICABLE REQUIREMENTS.

No.	Date	Revisions	App.

12/17/12

STATE OF TEXAS
CARLOS E. QUINTERO
94948
LICENSED PROFESSIONAL ENGINEER

Binkley & Barfield, Inc
consulting engineers
Texas Registration Number F-257
1710 Seamist Drive
Houston, Texas 77008-3189
(713) 869-3433

SURVEYED BY: AMANI ENG. | FIELD BOOK NO. : P-5486

CITY OF HOUSTON
DEPARTMENT OF PUBLIC WORKS AND ENGINEERING

ALMEDA SIMS WWTP & SPF IMPROVEMENTS PACKAGE II

BEDDING AND BACKFILL DETAILS

FILE NO:	–
WBS: R-000298-0005-4	
DRAWING SCALE	
NO SCALE	
CITY OF HOUSTON PM	
IRAJ RANJBAR, P.E.	
DWG NO. :	D-102
SHEET NO. 131 OF 147	

PUBLIC WORKS AND ENGINEERING ACCEPTED & FILED 49061 CITY DRAWING NUMBER HOUSTON, TEXAS

DRAWING FILE NAME: DWGFILENAME
G:\1158\05\Standard Figures\Block Details\D-102 BeddingAndBackfillDetails.dwg Sep 22,2011 - 10:07am RPD
BASE DRAWING FILE NAME: DWGFILENAME
DATE LAST MODIFIED: DATE
PC3 file used: PC3
COLOR TABLE:
ORIGINAL SCALE IN INCHES FOR REDUCED PLANS
0 1 2

G:\115805 Almeda Sims Package II\Cadd Dwgs_D-103 Storm Sewer Type C Inlet Detail.dwg Sep 22,2011 - 10:08am RPD

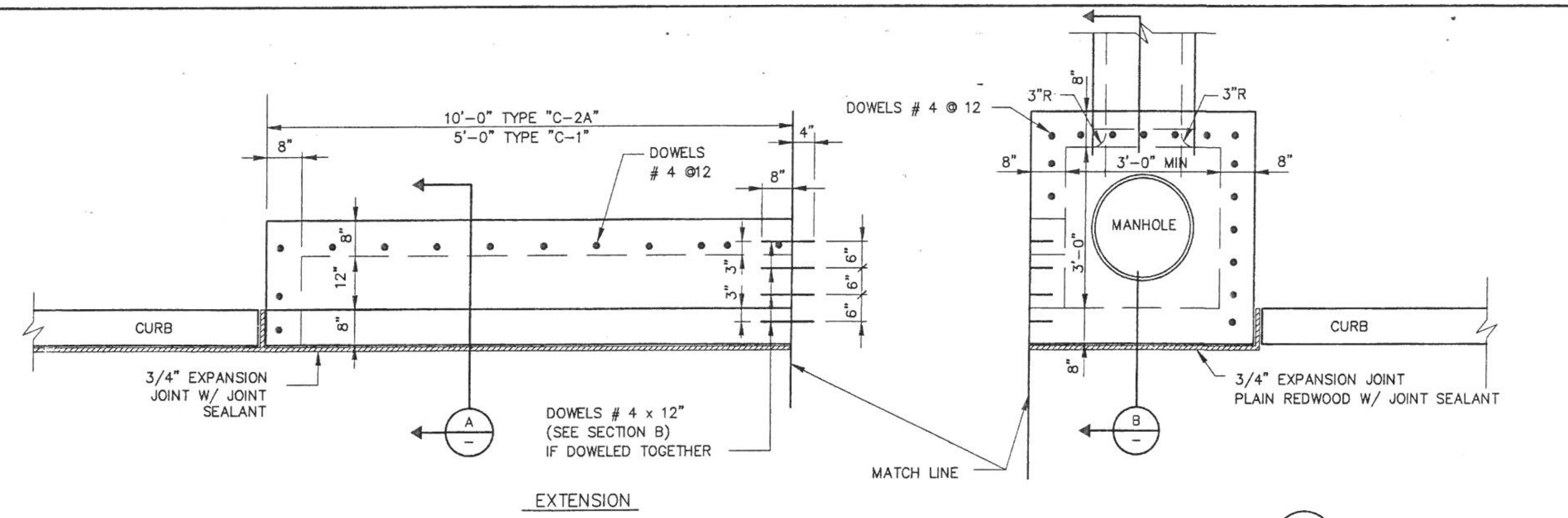

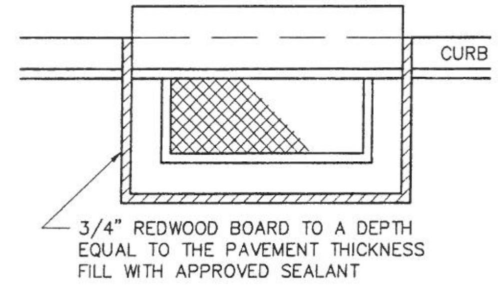

PLAN VIEW CURB INLET OPTION

NOTES:

1. FOR TYPE "C-2A" INLETS PROVIDE A CENTER 6"X6" COLUMNS IN THE CURB LINE BETWEEN ALL EXTENSIONS.
2. WALLS TO BE 6" IF BUILT WITH REINFORCED CONCRETE. WHEN BUILT WITH BRICK WALL, USE STRAIGHT WALL IN BACK WITH 6" REINFORCED CONCRETE TOP SLABS DOWELLED INTO BRICK WALLS WITH # 4 X 8" @ 12.

INLET TYPE	INLET CAPACITY	OPENING WIDTH
TYPE C	5.0 CFS	7'-0"
TYPE C-1	10.0 CFS	7'-8"
TYPE C-2	15.0 CFS	12'-4"
TYPE C-2A	20.0 CFS	17'-4"

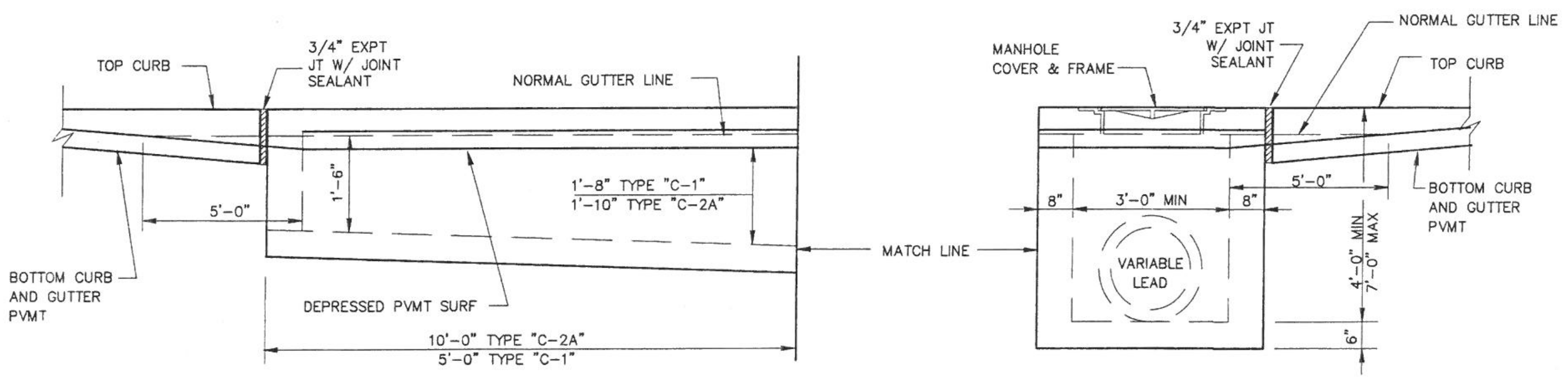

FRONT ELEVATION

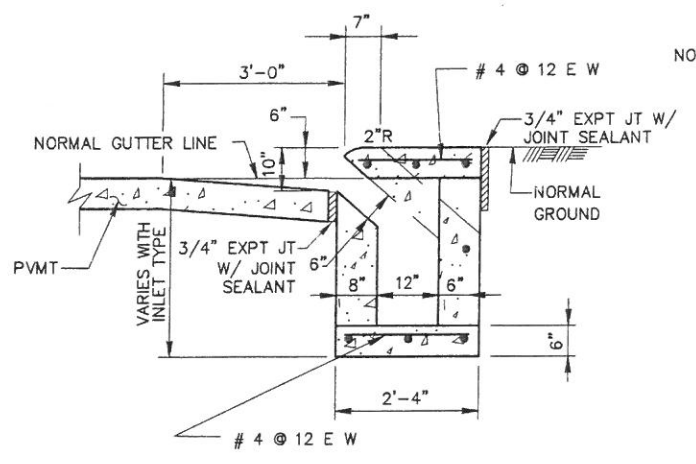

SECTION A

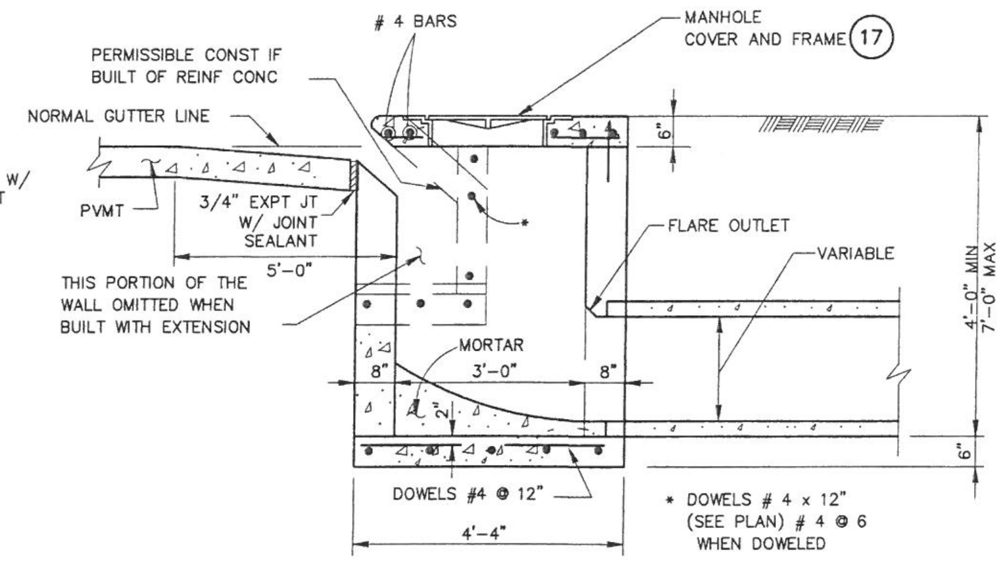

SECTION B

BASE DRAWING FILE NAME: DWGFILENAME
DATE LAST MODIFIED: DATE
PC3 file used: PC3
COLOR TABLE:

ORIGINAL SCALE IN INCHES FOR REDUCED PLANS 0 1 2

No.	Date	Revisions	App.

STATE OF TEXAS — CARLOS E. QUINTERO — 94948 — LICENSED PROFESSIONAL ENGINEER — 12/11/09

Binkley & Barfield, Inc
consulting engineers
Texas Registration Number F-257
1710 Seamist Drive
Houston, Texas 77008-3189
(713) 869-3433

SURVEYED BY: AMANI ENG. | FIELD BOOK NO. : P-5486

CITY OF HOUSTON
DEPARTMENT OF PUBLIC WORKS AND ENGINEERING

ALMEDA SIMS WWTP & SPF IMPROVEMENTS PACKAGE II

STORM DRAIN
TYPE "C" INLET DETAIL

FILE NO: -
WBS: R-000298-0005-4
DRAWING SCALE
NO SCALE
CITY OF HOUSTON PM
IRAJ RANJBAR, P.E.
DWG NO. : D-103
SHEET NO. 132 OF 147

PUBLIC WORKS AND ENGINEERING — ACCEPTED & FILED — 43061 — CITY DRAWING NUMBER — HOUSTON, TEXAS

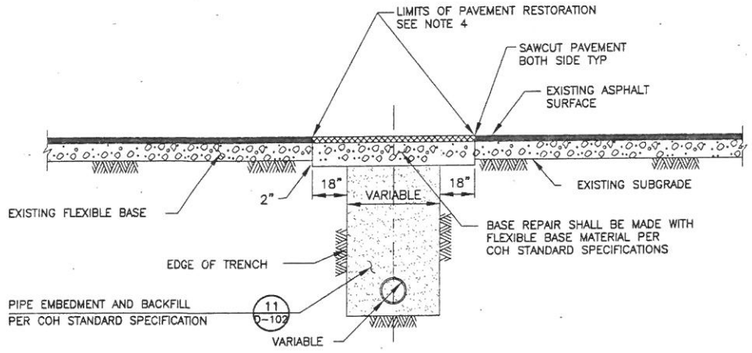

SECTION SHOWING METHOD OF REPAIR OF FLEXIBLE BASE PAVEMENT 46

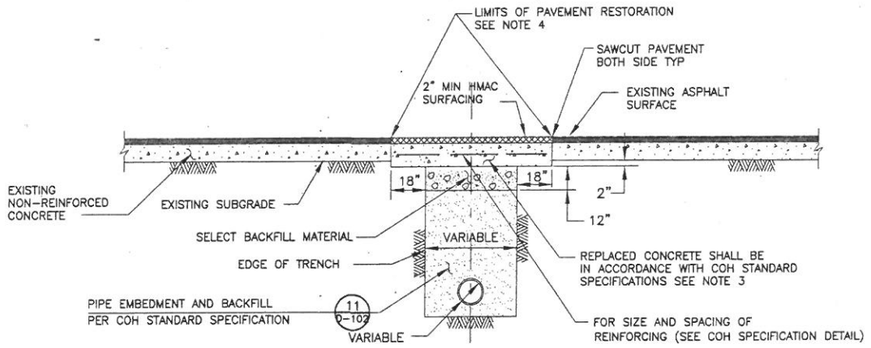

SECTION SHOWING METHOD OF REPAIR OF NON-REINFORCED CONCRETE PAVEMENT 47

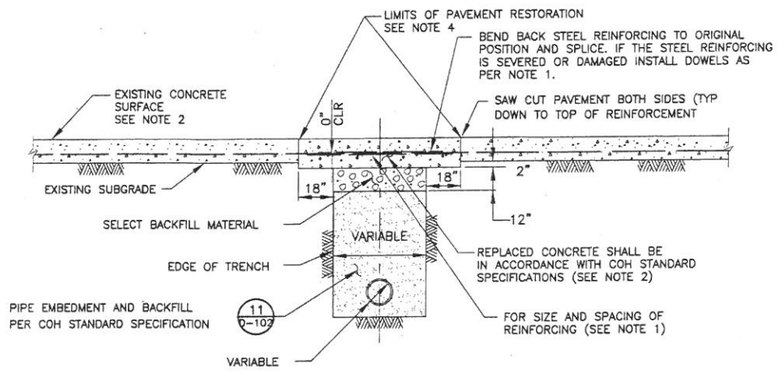

SECTION SHOWING METHOD OF REPAIR OF REINFORCED CONCRETE PAVEMENT 48

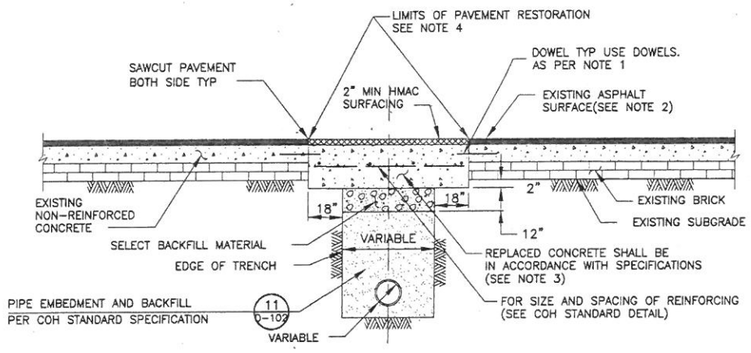

SECTION SHOWING METHOD OF REPAIR OF NON-REINFORCED CONCRETE PAVEMENT WITH BRICK 49

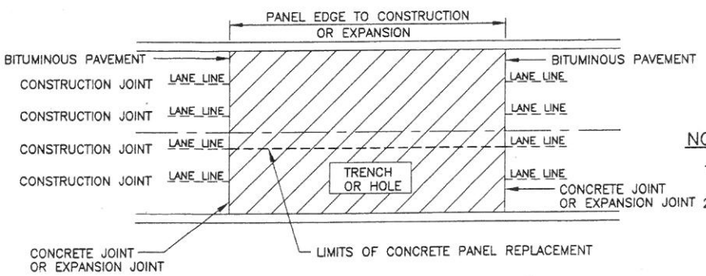

TYPICAL RESTORATION BITUMINOUS PAVEMENT 50

NOTES:

1. REFER TO SHEET D-102, DETAIL 11, BEDDING AND BACKFILL OF PIPE UNDER PAVEMENT STRUCTURES AND IN OTHER APPROVED AREAS.
2. BITUMINOUS PAVEMENT
   MILL FULL LANE OR LANES AND OVERLAY WIDTH MINIMUM 2" TO THE NEAREST CONSTRUCTION JOINT OR TRANSVERSE CRACK EXCEPT AS PROVIDED FOR CURB LANE.
   FULL LANE OR LANES, MILL AND OVERLAY OF WEARING COURSE TO THE NEAREST CONSTRUCTION JOINT OR TRANSVERSE CRACK.
3. CONCRETE PAVEMENT
   REPLACE FULL PANELS
4. FOR CONCRETE PAVEMENT WITH BITUMINOUS OVERLAY, REFER TO NOTE 2.
5. ALL OTHER TYPES OF SURFACES AND PAVEMENT, REPLACE WITH IN-KIND MATERIALS.

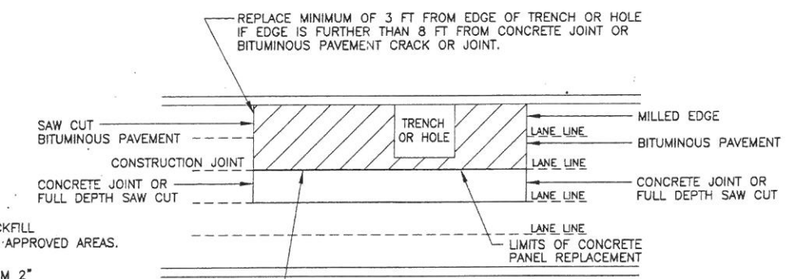

TYPICAL RESTORATION CONCRETE PAVEMENT 51

NOTES:

1. EXPOSE 15" OF REINFORCING STEEL AT PROPOSED SAWED JOINT. IF NO REINFORCING STEEL EXISTS, USE HORIZONTAL DOWELS. WHERE HORIZONTAL DOWELS ARE REQUIRED ALL HORIZONTAL DOWELS SHALL BE #6 BARS, 24" LONG, 24" C-C, DRILLED AND EMBEDDED 8" INTO THE CENTER OF THE EXISTING SLAB WITH "PO ROC".
2. IF REINFORCED CONCRETE IS OVERLAYED WITH ASPHALT REPLACE WITH 2" MIN HMAC TYPE "D" SURFACING.
3. CENTER REINFORCING IN SLAB THICKNESS.
4. REFER TO STANDARD DETAIL 0295-01 FOR PAVEMENT
5. CENTER REINFORCING IN SLAB THICKNESS.
6. REFER TO STANDARD DETAIL 0295-01 FOR PAVEMENT RESTORATION LIMITS.

No.	Date	Revisions	App.

STATE OF TEXAS
BOBBY T. WHITE
21999
REGISTERED
PROFESSIONAL ENGINEER
9/21/2011

Binkley & Barfield, Inc
consulting engineers
Texas Registration Number F-257
1710 Seamist Drive
Houston, Texas 77008-3189
(713) 869-3433

SURVEYED BY: AMANI ENG. | FIELD BOOK NO. : P-5486

CITY OF HOUSTON
DEPARTMENT OF PUBLIC WORKS AND ENGINEERING

ALMEDA SIMS WWTP & SPF IMPROVEMENTS PACKAGE II

SURFACE PAVING REPAIR DETAILS

FILE NO:	-
WBS:	R-000298-0005-4
DRAWING SCALE	NO SCALE
CITY OF HOUSTON PM	IRAJ RANJBAR, P.E.
DWG NO. :	D-104
SHEET NO.	133 OF 147

PUBLIC WORKS AND ENGINEERING
ACCEPTED & FILED
49061
CITY DRAWING NUMBER
HOUSTON, TEXAS

G:\115805 ALMEDA SIMS WWTP & SPF Improvements Package II\Cadd Dwgs\D-104 Surface Pavement Repair Details.dwg Sep 21,2011 - 12:30pm RHD
COLOR TABLE:
ORIGINAL SCALE IN INCHES
FOR REDUCED PLANS
0 1 2 3

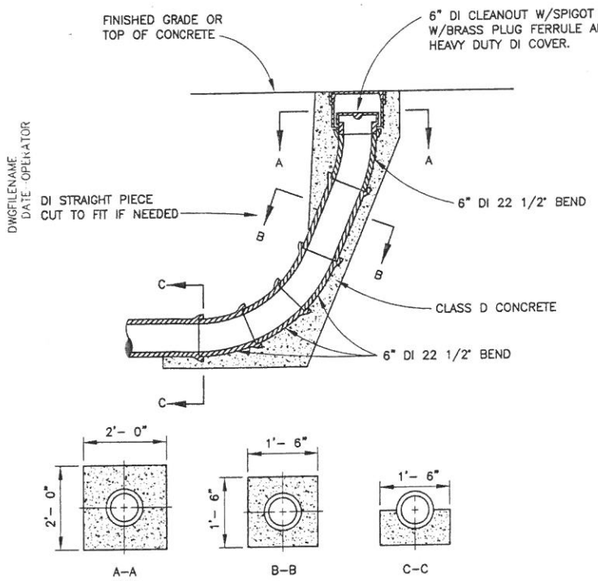

CLEANOUT DETAIL 86

SCALE: NO SCALE

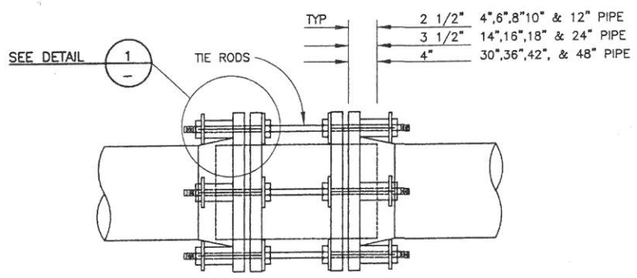

DOUBLE MECHANICAL JOINT "DMJ" DETAIL 87

SCALE: NO SCALE

PIPE DIA	TIE RODS	
	NO.	SIZE
4", 6" & 8"	2	3/4"
10" & 12"	4	3/4"
14"	6	3/4"
16" & 18"	10	3/4"
20"	12	3/4"
24"	16	3/4"
30" & 36"	16	1"
48" PIPE	18	1 1/8"

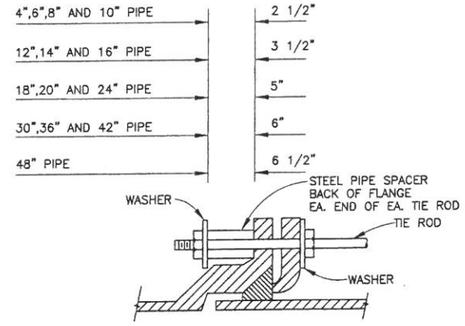

DETAIL 1

SCALE: NO SCALE

NOTE:

EXCEPT WHERE SPECIFICALLY SHOWN OTHERWISE, DETAILS ON THIS SHEET APPLY TO THE ENTIRE SET OF DRAWINGS, WHETHER SPECIFICALLY REFERENCED OR NOT.

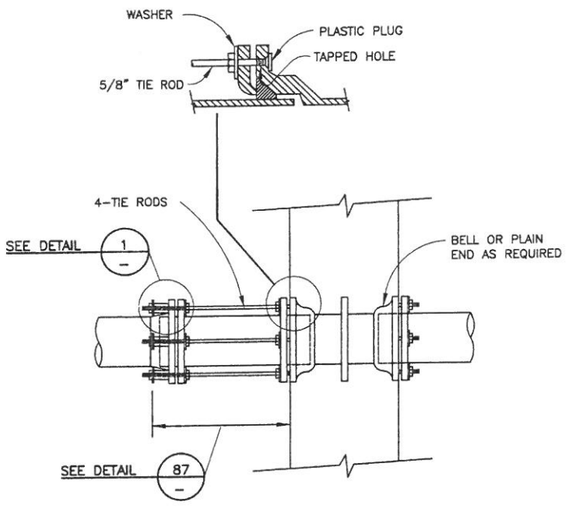

MJ AND MJ WALL PIPE DETAIL 88

SCALE: NO SCALE

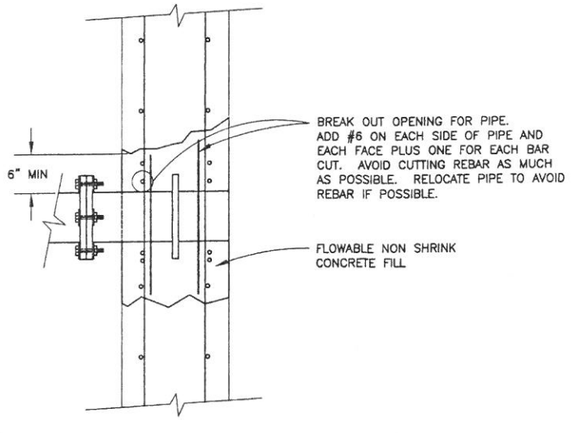

WALL PIPE IN EXISTING WALL DETAIL 89

SCALE: NO SCALE

No. Date Revisions A.D.

STATE OF TEXAS
LI CHUNG CHEN
98576
REGISTERED PROFESSIONAL ENGINEER
9-21-2011

Binkley & Barfield, Inc
consulting engineers
Texas Registration Number F-257
1710 Seamist Drive
Houston, Texas 77008-3189
(713) 869-3433

SURVEYED BY: AMANI ENG. | FIELD BOOK NO. : P-5486

CITY OF HOUSTON
DEPARTMENT OF PUBLIC WORKS AND ENGINEERING

ALMEDA SIMS WWTP & SPF IMPROVEMENTS PACKAGE II

STANDARD PIPING DETAILS

FILE NO:	-
WBS: R-000298-0005-4	
DRAWING SCALE	NO SCALE
CITY OF HOUSTON PM	IRAJ RANJBAR, P.E.
DWG NO. :	D-105
SHEET NO. 134 OF 147	

PUBLIC WORKS AND ENGINEERING ACCEPTED & FILED 49061 CITY DRAWING NUMBER HOUSTON, TEXAS

G:\115805 AEA\0660-3R\dist\Package II\Cadd Dwgs_D-105 STANDARD PIPING.dwg Sep 22,2011 - 10:10cm RPD

BASE DRAWING FILE NAME: DWGFILENAME
DATE LAST MODIFIED: DATE
PC3 file used: PC3
COLOR TABLE:

ORIGINAL SCALE IN INCHES FOR REDUCED PLANS
0 1 2
B=5 10/24/99

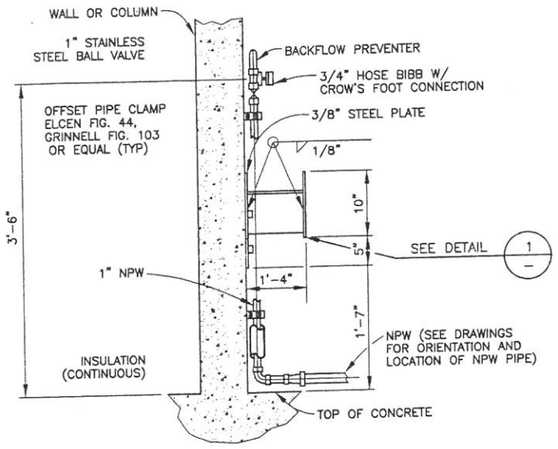

TYPICAL WALL OR COLUMN MOUNT
HOSE BIBB ASSEMBLY DETAIL

HOSE BIBB 90

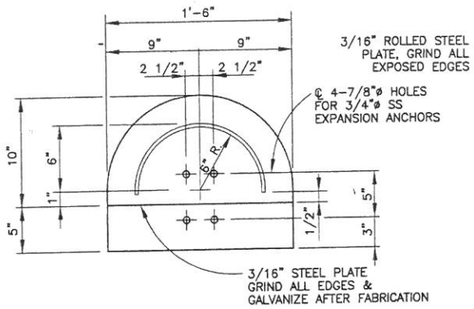

DETAIL 1

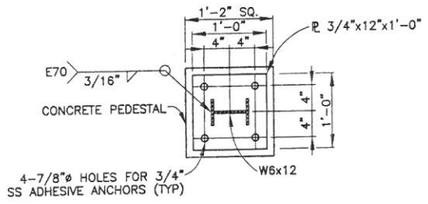

DETAIL 2

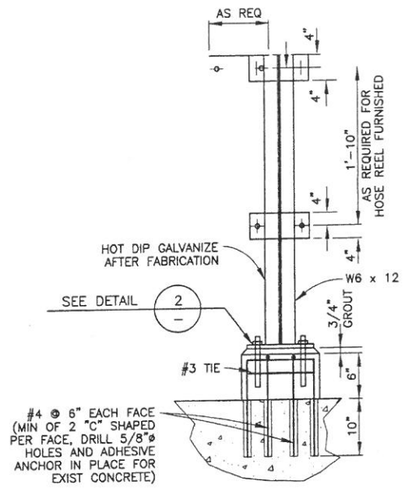

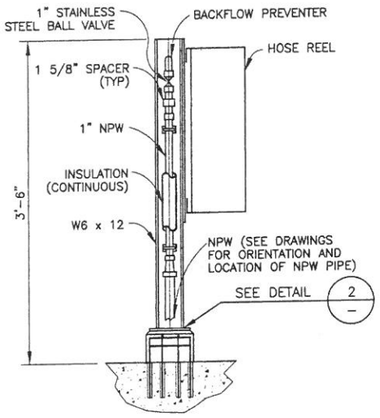

TYPICAL BASE MOUNT
HOSE REEL ASSEMBLY DETAIL 91

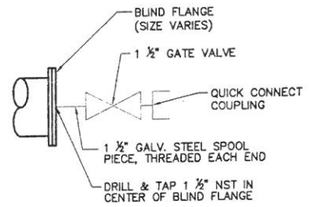

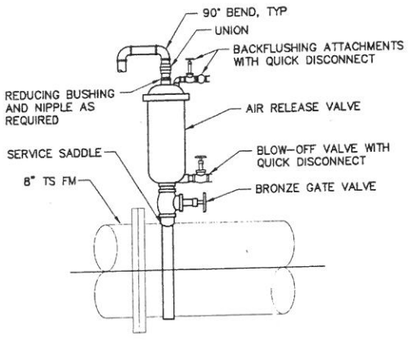

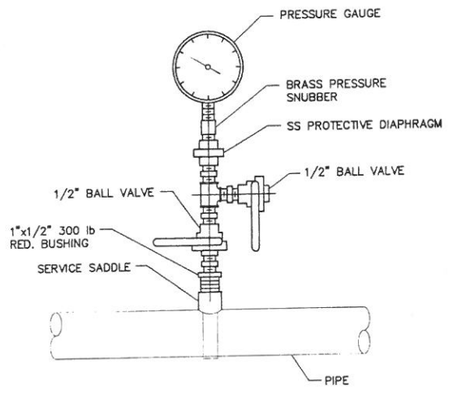

PRESSURE GAUGE TAP AND
AIR RELIEF VALVE ASSEMBLY 219
SCALE: NONE

No.	Date	Revisions	App

STATE OF TEXAS
LI CHUNG CHEN
98576
REGISTERED PROFESSIONAL ENGINEER
9-21-2011

Binkley & Barfield, Inc
consulting engineers
Texas Registration Number F-257
1710 Seamist Drive
Houston, Texas 77008-3189
(713) 869-3433

SURVEYED BY: AMANI ENG. FIELD BOOK NO. : P-5486

CITY OF HOUSTON
DEPARTMENT OF PUBLIC WORKS AND ENGINEERING

ALMEDA SIMS WWTP & SPF IMPROVEMENTS PACKAGE II

MISCELLANEOUS DETAILS

FILE NO:	–
WBS: R-000298-0005-4	
DRAWING SCALE	NO SCALE
CITY OF HOUSTON PM	IRAJ RANJBAR, P.E.
DWG NO. :	D-106
SHEET NO.	135 OF 147

PUBLIC WORKS AND ENGINEERING
ACCEPTED & FILED
49061
CITY DRAWING NUMBER
HOUSTON, TEXAS

G:\115805 Alameda Sims\Backup II\Cadd Dwgs_D-106 MISCELLANEOUS DETAILS.dwg Sep 22,2011 - 10:13am RPD
COLOR TABLE:
ORIGINAL SCALE IN INCHES FOR REDUCED PLANS
0 1 2 3

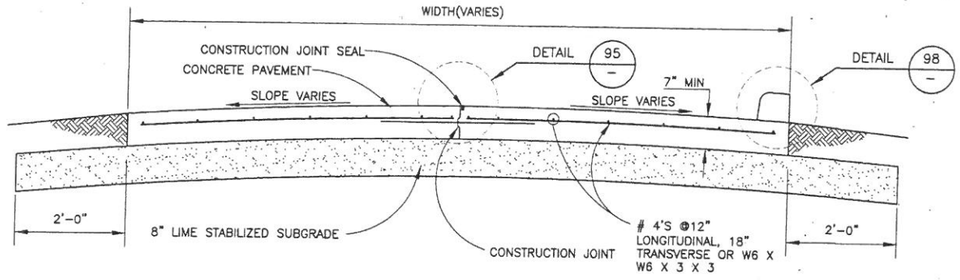

CONCRETE PAVEMENT SECTION 94
SCALE: NO SCALE

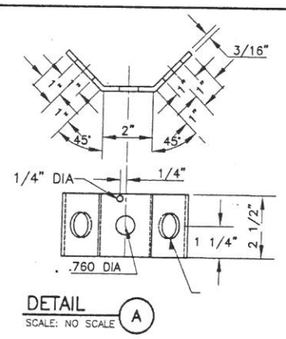

DETAIL A
SCALE: NO SCALE

NOTES:

1. STEEL TO MEET ASTM STANDARD SPECIFICATIONS FOR CONCRETE REINFORCING BARS. UNITS TO BE SPACED ON 12" CENTERS
2. EXPANSION JOINT TO BE PLACED AT THE END OF EACH CURB RADIUS AND SPACED AT A MAXIMUM DISTANCE OF 80 FEET
3. CENTER DOWEL HORIZONTALLY ON JOINT
4. CENTER DOWEL VERTICALLY IN CONCRETE BASE. EXTEND THICKENED CONCRETE AS NEEDED TO MAINTAIN 3" MIN COVER
5. PAVEMENT CONCRETE SHALL BE MINIMUM 3000 PSI WITH GRADE 60 REINFORCEMENT

TABLE 2

PAVEMENT THICKNESS (IN)	DOWEL SIZES AND SPACINGS		
	DIAMETER (IN)	LENGTH (IN)	SPACING (IN)
6	3/4	18	12
7	1	18	12
8	1	18	12
9	1	20	12
10	1	20	12
11	1	20	12
12	1	20	12

LONGITUDINAL CONSTRUCTION JOINT
SCALE: NO SCALE

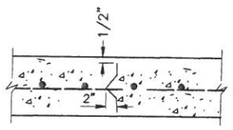

SECTION
DEFORMED METAL STRIP

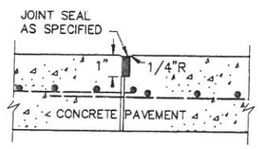

SECTION
CONSTRUCTION JOINT SEAL

PAVING CONNECTION JOINT 95
SCALE: NO SCALE

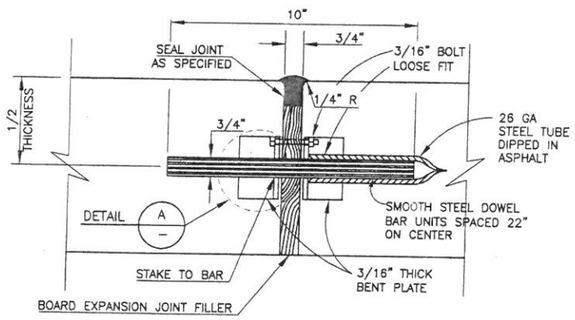

(MAXIMUM SPACING OF 40'-0" UNLESS OTHERWISE NOTED)

PAVING DOWEL TYPE EXPANSION JOINT
SCALE: NO SCALE

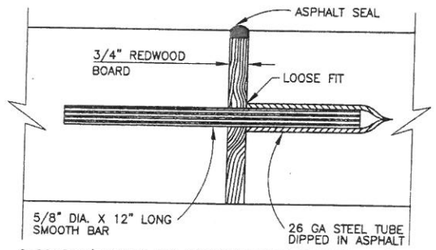

2-DOWELS (SMOOTH) PER EXPANSION IN 2'-6" WALK @ 18" C-C
3-DOWELS (SMOOTH) PER EXPANSION IN 4'-0" WALK @ 18" C-C
4-DOWELS (SMOOTH) PER EXPANSION IN 6'-0" WALK @ 18" C-C
6-DOWELS (SMOOTH) PER EXPANSION IN 8'-0" WALK @ 18" C-C
7-DOWELS (SMOOTH) PER EXPANSION IN 10'-0" WALK @ 18" C-C
9-DOWELS (SMOOTH) PER EXPANSION IN 14'-0" WALK @ 18" C-C

SIDEWALK EXPANSION JOINT DETAIL 96
SCALE: NO SCALE

No.	Date	Revisions	App.

STATE OF TEXAS
BOBBY T. WHITE
21999
REGISTERED PROFESSIONAL ENGINEER
9/21/2011

Binkley & Barfield, Inc
consulting engineers
Texas Registration Number F-257
1710 Seamist Drive
Houston, Texas 77008-3189
(713) 869-3433

SURVEYED BY: AMANI ENG. | FIELD BOOK NO. : P-5486

CITY OF HOUSTON
DEPARTMENT OF PUBLIC WORKS AND ENGINEERING

ALMEDA SIMS WWTP & SPF IMPROVEMENTS PACKAGE II

STANDARD CONCRETE PAVING & EXPANSION JOINT DETAILS

FILE NO:	-
WBS: R-000298-0005-4	
DRAWING SCALE	
NO SCALE	
CITY OF HOUSTON PM	
IRAJ RANJBAR, P.E.	
DWG NO. : D-107	
SHEET NO. 136 OF 147	

PUBLIC WORKS AND ENGINEERING
ACCEPTED & FILED
49061
CITY DRAWING NUMBER
HOUSTON, TEXAS

G:\115805 ALMEDA SIMS WWTP & SPF IMPROVEMENTS Package II\Cadd Dwgs_D-107 Standard Concrete Paving & Expansion Joint Details.dwg Sep 21,2011 - 12:37pm RPD
BASE DRAWING FILE NAME: DWGFILENAME
DATE LAST MODIFIED: DATE
PC3 file used: PC3
COLOR TABLE:
ORIGINAL SCALE IN INCHES FOR REDUCED PLANS
0 1 2

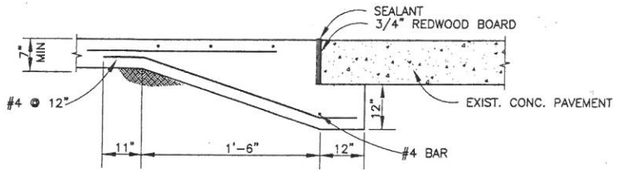

CONCRETE PAVING TO EXIST CONCRETE

SCALE: NO SCALE

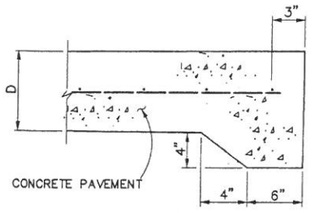

STANDARD CONCRETE PAVING HEADER

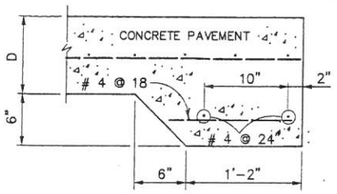

STANDARD RAILROAD HEADER

NOTE:

RAILROAD HEADER TO BE POURED MONOLITHICALLY WITH CONCRETE PAVEMENT.

PAVING HEADERS 98

SCALE: NO SCALE

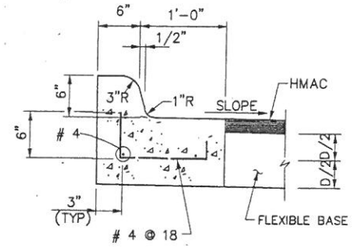

ESPLANADE CURB CONNECTED TO FLEXIBLE BASE

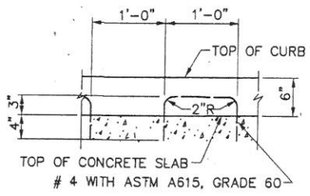

ALTERNATE CONCRETE CURB REINFORCEMENT

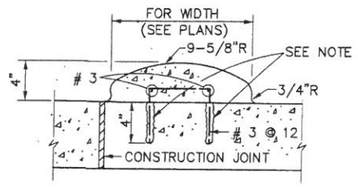

MOUNTABLE CURB

NOTE:

WHERE MOUNTABLE CURB IS TO BE PLACED ON EXISTING BASE, VERTICAL REBAR SHALL BE DOWELLED AND SET IN SULFUR OR QUICK SETTING CEMENT.

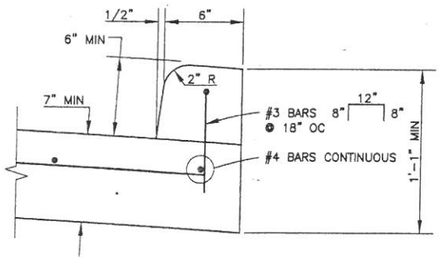

TYPICAL CURB DETAIL

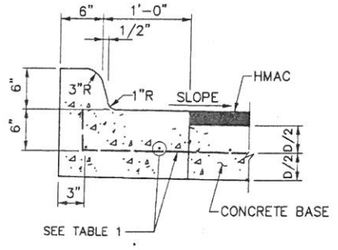

ESPLANADE CURB CONNECTED TO CONCRETE BASE

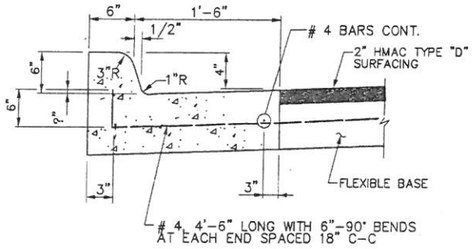

MONOLITHIC CURB AND GUTTER

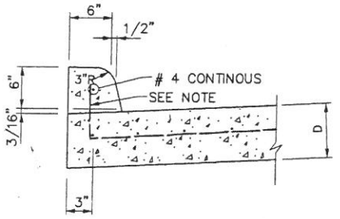

CONCRETE CURB

NOTE:

WHEN CONCRETE CURB IS TO BE PLACED ON EXISTING CONCRETE BASE USE # 4 @ 18 X 10" LONG, DOWELLED AND SET IN SULFUR OR QUICK SETTING CEMENT. SET # 4 DOWELS, 25" LONG AT 12" C-C WHEN PAVEMENT SECTION POURED.

CURB DETAILS 99

SCALE: NO SCALE

No.	Date	Revisions	App.

STATE OF TEXAS
BOBBY T. WHITE
21999
REGISTERED PROFESSIONAL ENGINEER
10/24/11

Binkley & Barfield, Inc
consulting engineers
Texas Registration Number F-257
1710 Seamist Drive
Houston, Texas 77008-3189
(713) 869-3433

SURVEYED BY: AMANI ENG. | FIELD BOOK NO. : P-5486

CITY OF HOUSTON
DEPARTMENT OF PUBLIC WORKS AND ENGINEERING

ALMEDA SIMS WWTP & SPF IMPROVEMENTS PACKAGE II

STANDARD PAVEMENT DETAILS

FILE NO:	–
WBS:	R-000298-0005-4
DRAWING SCALE	NO SCALE
CITY OF HOUSTON PM	IRAJ RANJBAR, P.E.
DWG NO. :	D-108
SHEET NO.	137 OF 147

PUBLIC WORKS AND ENGINEERING
ACCEPTED & FILED
49061
CITY DRAWING NUMBER
HOUSTON, TEXAS

G:\115805 ALMEDA-SIMS WWTP\Package II\Cadd Data_D-108 Standard Pavement Details.dwg Sep 21,2011 - 12:39pm RPD

COLOR TABLE:

ORIGINAL SCALE IN INCHES FOR REDUCED PLANS
0 1 2 3

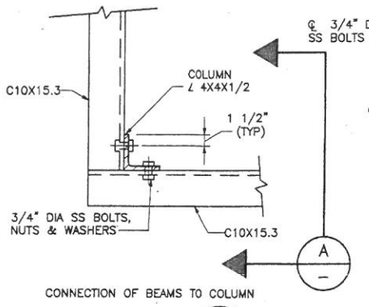

DETAIL 1 — SCALE: NONE

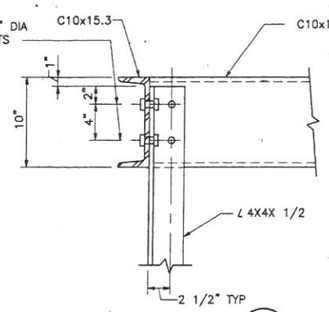

SECTION A — SCALE: NONE

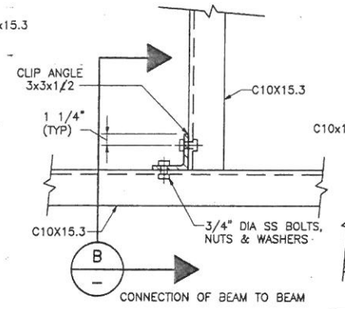

DETAIL 2 — SCALE: NONE

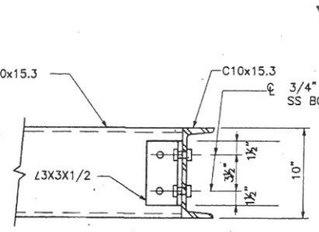

SECTION B — SCALE: NONE

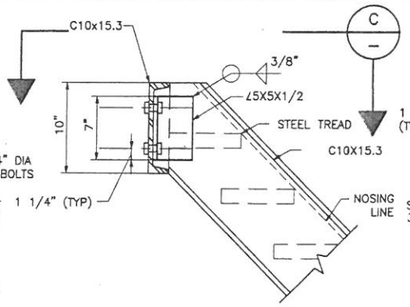

DETAIL 3 — SCALE: NONE

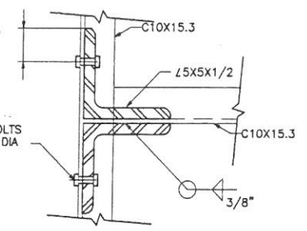

SECTION C — SCALE: NONE

NOTES:

1. HEIGHT OF STEPOVER WALKWAY SHALL BE IN EVEN 7 INCH INCREMENTS AND AT LEAST HIGH ENOUGH AND WIDE ENOUGH TO CLEAR ALL OBSTACLES BY AT LEAST 2 INCHES.
2. A LANDING AT LEAST 48"x48"x12" THICK WITH #5 @ 12 EW TOP SHALL BE PROVIDED AT ALL LOCATIONS WHERE STEPOVER LANDING ENDS WHERE THE EXISTING WALKWAY IS INSUFFICIENT.

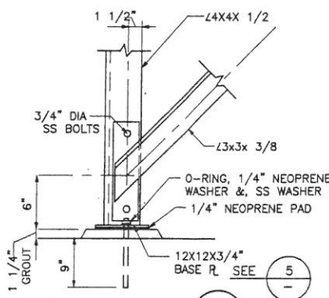

DETAIL 4 — SCALE: NONE

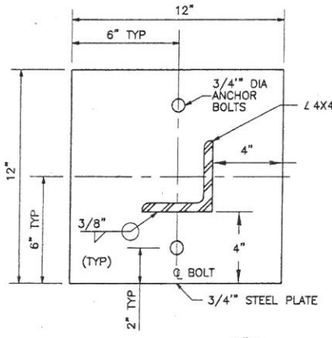

DETAIL 5 — SCALE: NONE

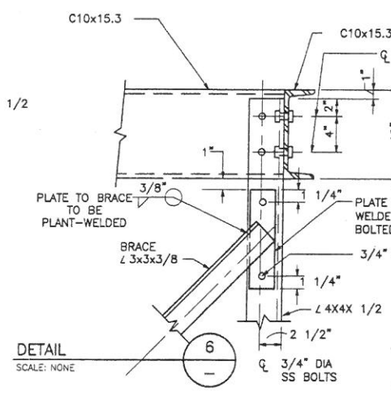

DETAIL 6 — SCALE: NONE

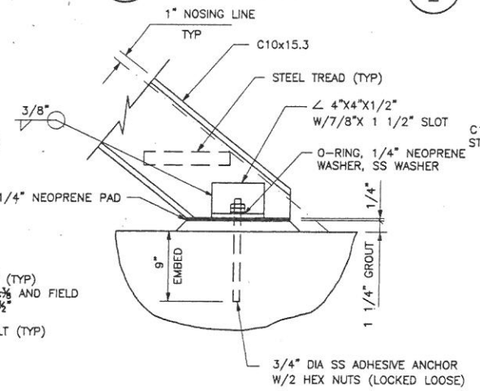

DETAIL 7 — SCALE: NONE

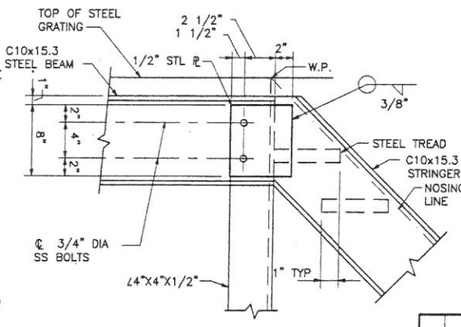

DETAIL 8 — SCALE: NONE

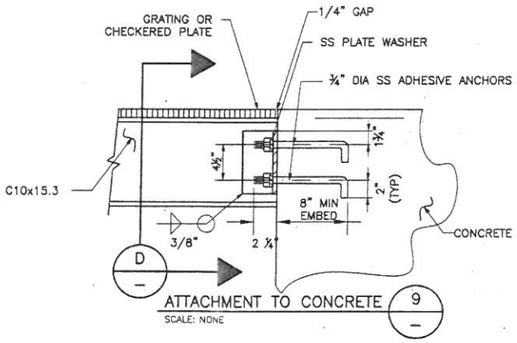

ATTACHMENT TO CONCRETE 9 — SCALE: NONE

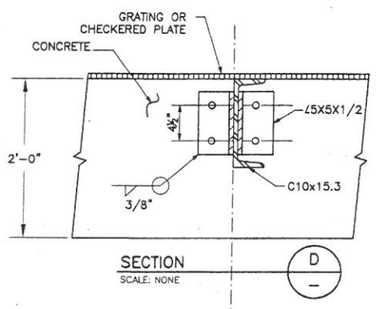

SECTION D — SCALE: NONE

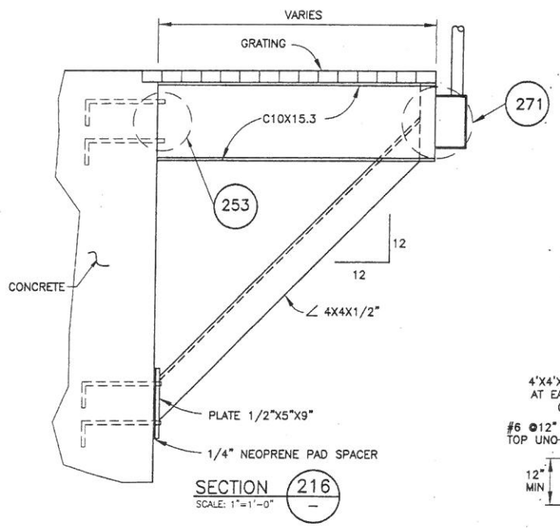

SECTION 216 — SCALE: 1"=1'-0"

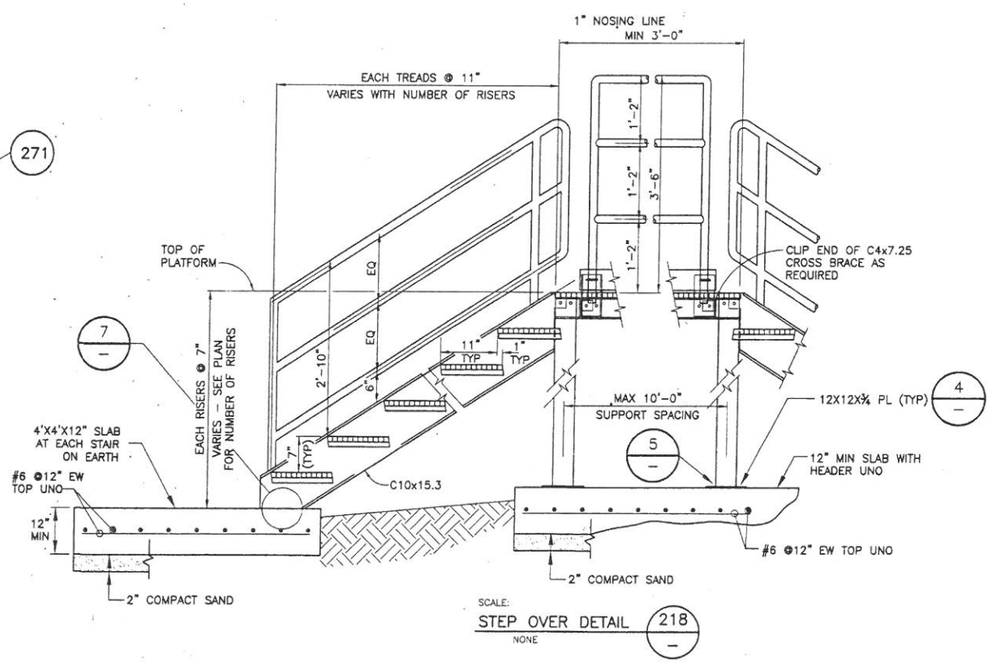

SCALE: STEP OVER DETAIL 218 — NONE

No.	Date	Revisions	App.

STATE OF TEXAS — BOBBY T. WHITE — 21999 — REGISTERED PROFESSIONAL ENGINEER — 9/27/2011

Binkley & Barfield, Inc
consulting engineers
Texas Registration Number F-257
1710 Seamist Drive
Houston, Texas 77008-3189
(713) 869-3433

SURVEYED BY: AMANI ENG. | FIELD BOOK NO. : P-5486

CITY OF HOUSTON
DEPARTMENT OF PUBLIC WORKS AND ENGINEERING

ALMEDA SIMS WWTP & SPF IMPROVEMENTS PACKAGE II

STAIR DETAILS

FILE NO:	–
WBS: R-000298-0005-4	
DRAWING SCALE	NONE
CITY OF HOUSTON PM	IRAJ RANJBAR, P.E.
DWG NO. :	D-109
SHEET NO. 138 OF 147	

PUBLIC WORKS AND ENGINEERING — ACCEPTED & FILED — 49061 CITY DRAWING NUMBER — HOUSTON, TEXAS

ORIGINAL SCALE IN INCHES FOR REDUCED PLANS 0 1 2 3

COLOR TABLE:

G:\115805 /ALMEDA-SIMS-WWTP Package II\Cadd Dwgs_D-109 Stair Details.dwg Sep 21,2011 - 12:42pm RPD

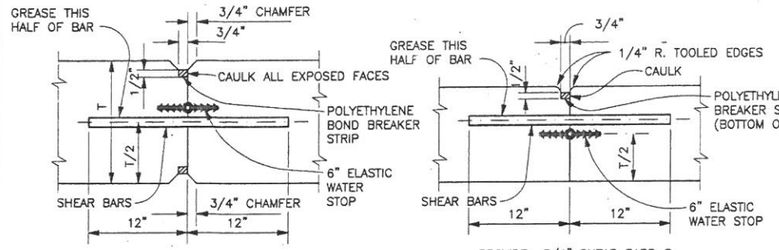

PROVIDE 3/4" DIA SHEAR BARS @ 18" CTRS ACROSS JOINT.

WALLS

PROVIDE 3/4" SHEAR BARS @ 18" CTRS ACROSS JOINT.

SLABS

CONTRACTION JOINTS 210

SCALE: NO SCALE

TYPE A – WITH ELASTIC WATER STOP
TYPE B – WITHOUT ELASTIC WATER STOP

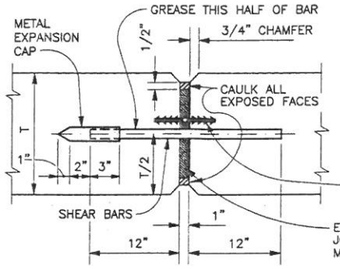

PROVIDE 3/4" DIA SHEAR BARS @ 18" CTRS ACROSS JOINT.

WALLS

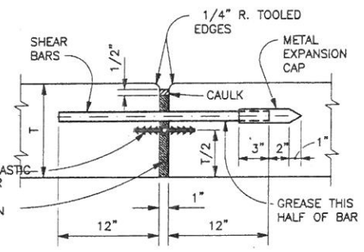

PROVIDE 3/4" DIA SHEAR BARS @ 18" CTRS ACROSS JOINT.

SLABS

EXPANSION JOINTS 211

SCALE: NO SCALE

TYPE C – WITH ELASTIC WATER STOP
TYPE D – WITHOUT ELASTIC WATER STOP

NOTES: 1. REINFORCING SHALL NOT BE EXTENDED ACROSS JOINT.
2. SHEAR BARS SHALL BE SMOOTH AND FREE FROM RUST OR SCALE.

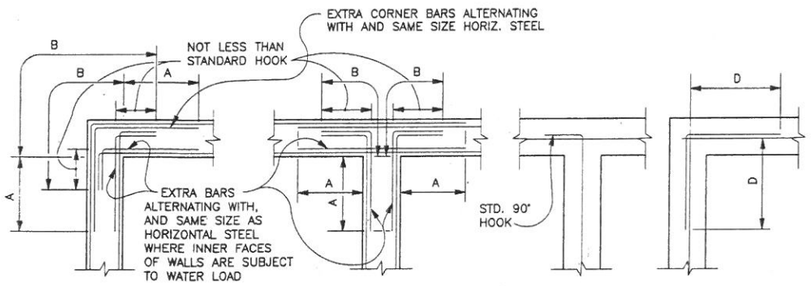

NOTE: VERTICAL REINFORCING NOT SHOWN FOR CLARITY.

A = 1/5 THE CLEAR SPAN DISTANCE MEASURED HORIZONTALLY OR VERTICALLY, WHICHEVER IS THE SMALLER, BUT IN NO CASE LESS THEN THE REQUIRED LENGTH OF LAPPED SPLICES FOR TOP BARS AS SHOWN ON THIS SHEET.

B = SUFFICIENT LENGTH TO PERMIT BARS TO EXTEND THROUGH THE WALL TO THE OPPOSITE FACE AND TERMINATE IN A STANDARD HOOK.

D = NOT LESS THAN THE LENGTH REQUIRED FOR LAPPED SPLICES FOR TOP BARS AS SHOWN ON THIS SHEET.

TYPICAL CORNER REINFORCING DETAILS 213

SCALE: NO SCALE

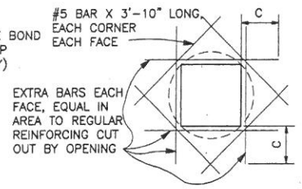

FOR SLAB THICKER THAN 7"

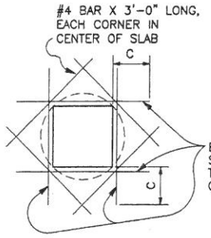

FOR SLAB 7" AND LESS IN THICKNESS

SLABS

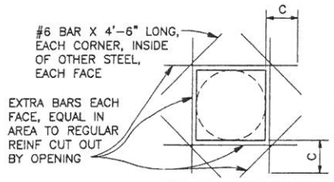

OPENINGS LARGER THAN 21" IN DIAM OR DIAGONAL

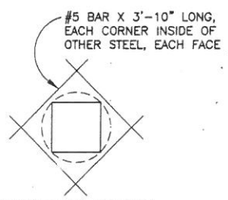

OPENINGS 21" AND LESS IN DIAM OR DIAGONAL

WALLS

TYPICAL EXTRA REINFORCING AT OPENINGS 214

SCALE: NO SCALE

C = THE REQUIRED LENGTH FOR LAPPED SPLICE FOR TOP BARS AS SHOWN ON THIS SHEET.

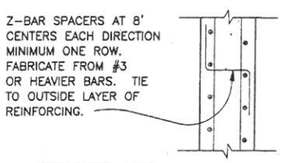

SPACERS FOR WALL REINFORCEMENT 215

SCALE: NO SCALE

CONCRETE COVER FOR REINFORCEMENT

LOCATION	MINIMUM COVER
UNFORMED SURFACES ADJACENT TO EXCAVATION	3"
FORMED, TOP SURFACE OR UNFORMED EXPOSED TO LIQUID OR WATER CONDENSATION	3"
FORMED, OR UNFORMED SURFACE EXPOSED TO OR ABOVE SANITARY SEWAGE	3"
UNFORMED SURFACES OVER SEAL SLAB	2"
FORMED OR TOP SURFACES EXPOSED TO WEATHER OR SATURATED AIR, SUBMERGED OR IN CONTACT WITH EARTH:	
#6 OR LARGER BARS	2"
#5 OR SMALLER BARS	1 1/2"
OTHER LOCATIONS:	
BARS IN BEAMS OR GIRDERS INCLUDING STIRRUPS	1 1/2"
COLUMN SPIRALS OR TIES	1 1/2"
OTHER BARS	
#7 OR LARGER	BAR DIAMETER
#6 OR SMALLER	3/4"

COVER FOR REINFORCING STEEL SHALL NOT BE LESS THAN THE MINIMUM GIVEN ABOVE (NO MINUS TOLERANCE) AND SHALL NOT EXCEED THE MINIMUM BY MORE THAN 1/4 INCH WHERE THE CONCRETE THICKNESS IS < 24 INCHES OR MORE THAN 1/2 INCH WHERE THE CONCRETE THICKNESS IS > 24 INCHES.

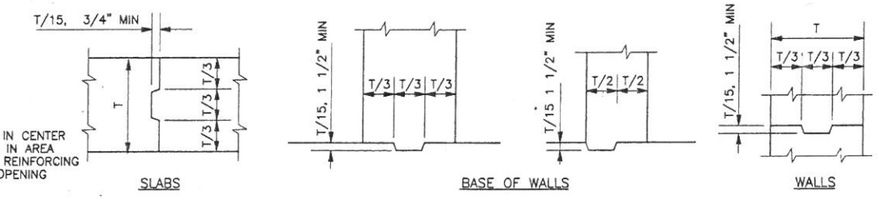

JOINTS WITHOUT WATER STOPS

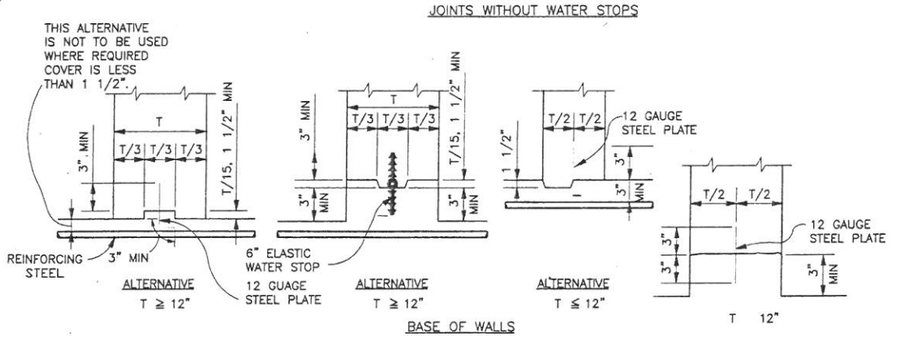

BASE OF WALLS

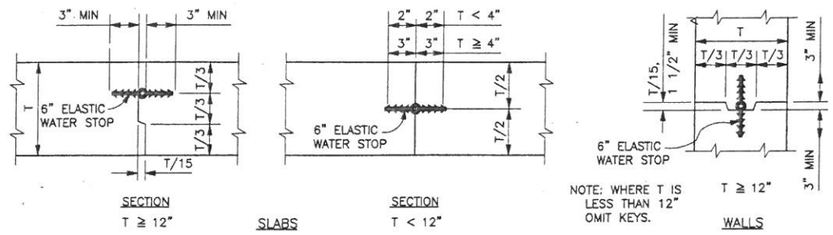

WATERTIGHT JOINTS

TYPICAL CONSTRUCTION JOINTS 212

SCALE: NO SCALE

NOTE: REINFORCING STEEL IS TO BE CARRIED ACROSS ALL CONSTRUCTION JOINTS.

BAR SIZE	LENGTH OF LAPPED SPLICES FOR REINFORCING IN INCHES			
	SPLICES NOT STAGGERED		WITH STAGGERED SPLICES	
	*TOP BARS	OTHERS	*TOP BARS	OTHERS
3	20	20	15	15
4	23	20	17	15
5	30	24	24	18
6	42	30	30	24
7	50	36	38	27
8	66	47	50	36
9	83	60	64	46
10	106	76	81	58
11	130	93	100	71

* TOP BARS ARE HORIZONTAL BARS SO PLACED THAT MORE THAN 12" OF CONCRETE IS CAST IN THE MEMBER BELOW THE BAR. HORIZONTAL BARS IN WALLS ARE TO BE PROVIDED WITH LAPS AS REQUIRED FOR TOP BARS.

LENGTHS FOR LAPPED SPLICES SHALL BE NOT LESS THAN (NO MINUS TOLERANCE) SHOWN ABOVE.

LAPPED SPLICES SHALL NOT BE MADE AT POINTS OF MAX. STRESS AS DETERMINED BY THE ENGINEER AND SHALL NOT BE SPACED CLOSER THAN 6" ON CTRS SPLICES ARE STAGGERED IF NOT MORE THAN 1/2 ARE SPLICED IN A LAP SPLICE LENGTH.

GENERAL NOTES:

WHETHER SPECIFICALLY REFERENCED OR NOT, EXCEPT WHERE SPECIFICALLY SHOWN OTHERWISE, DETAILS ON THIS SHEET APPLY TO THE ENTIRE SET OF DRAWINGS.

No.	Date	Revisions	App.

STATE OF TEXAS
BOBBY T. WHITE
21999
REGISTERED PROFESSIONAL ENGINEER
9/21/11

Binkley & Barfield, Inc
consulting engineers
Texas Registration Number F-257
1710 Seamist Drive
Houston, Texas 77008-3189
(713) 869-3433

SURVEYED BY: AMANI ENG. | FIELD BOOK NO. : P-5488

CITY OF HOUSTON
DEPARTMENT OF PUBLIC WORKS AND ENGINEERING

ALMEDA SIMS WWTP & SPF IMPROVEMENTS PACKAGE II

STANDARD REINFORCEMENT CONCRETE DETAILS

FILE NO:	–
WBS: R-000298-0005-4	
DRAWING SCALE	NO SCALE
CITY OF HOUSTON PM	IRAJ RANJBAR, P.E.
DWG NO. :	D-110
SHEET NO.	139 OF 147

PUBLIC WORKS AND ENGINEERING ACCEPTED & FILED
49061
CITY DRAWING NUMBER
HOUSTON, TEXAS

ORIGINAL SCALE IN INCHES FOR REDUCED PLANS 0 1 2

BASE DRAWING FILE NAME: DWG FILENAME
DATE LAST MODIFIED: DATE
PCS file used: PCS
COLOR TABLE:

G:\115805 /Revised - Bid set\Package II\Cadd Dwgs\D-110 Standard Reinforced Concrete Details.dwg Sep 21,2011 - 12:41pm RPD

NOTES:

1. EXCEPT WHERE SPECIFICALLY SHOWN OTHERWISE, DETAILS ON THIS SHEET APPLY TO THE ENTIRE SET OF DRAWINGS, WHETHER SPECIFICALLY REFERENCED OR NOT.
2. SUPPORT SPACING SHALL BE AS PER SPECIFICATIONS.

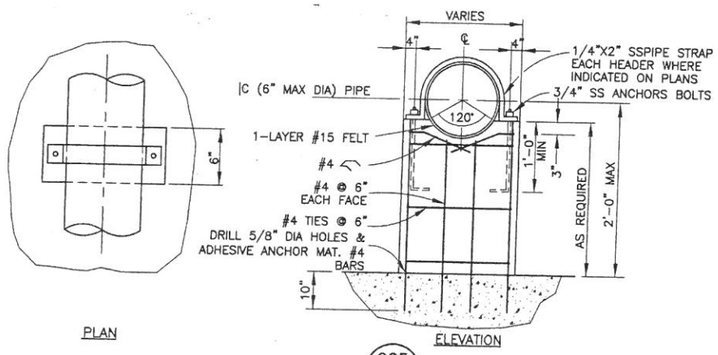

PIPE SUPPORT DETAIL 225 –

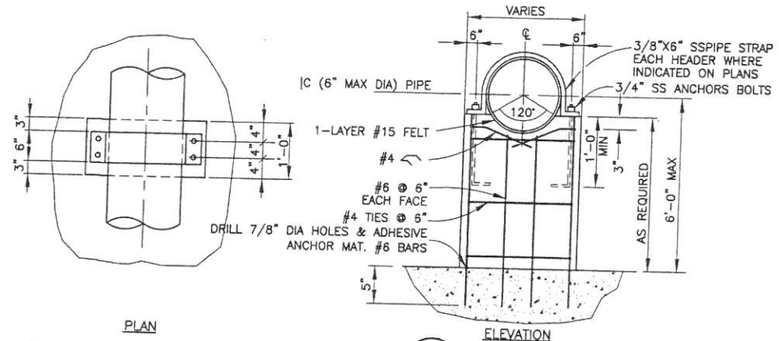

PIPE SUPPORT DETAIL 226 –

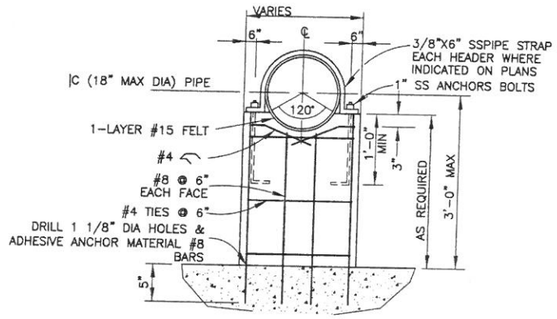

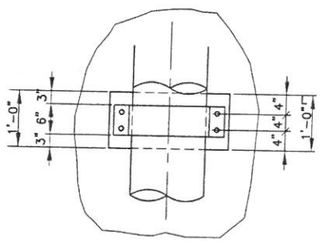

PIPE SUPPORT DETAIL 227 –

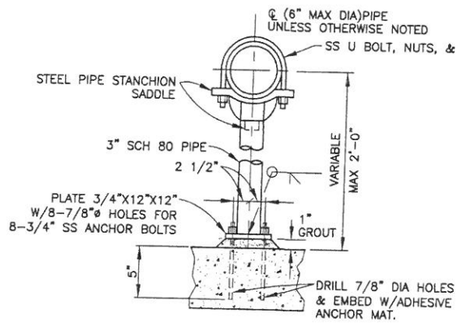

NOTE: HOT DIP GALV AFTER FABRICATION AND RECEIVE PROTECTIVE COATING

TYPICAL PIPE SUPPORT DETAIL 228 –

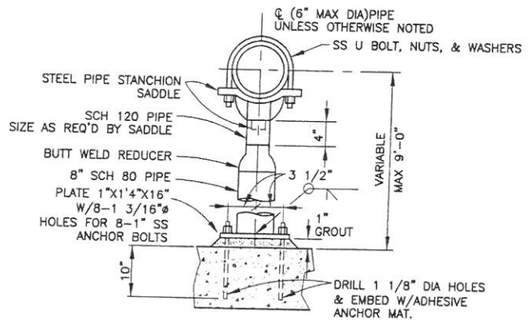

NOTE: HOT DIP GALV AFTER FABRICATION AND RECEIVE PROTECTIVE COATING

TYPICAL PIPE SUPPORT DETAIL 229 –

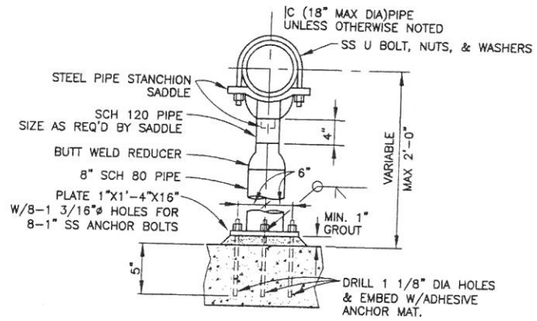

NOTE: HOT DIP GALV AFTER FABRICATION AND RECEIVE PROTECTIVE COATING

TYPICAL PIPE SUPPORT DETAIL 230 –

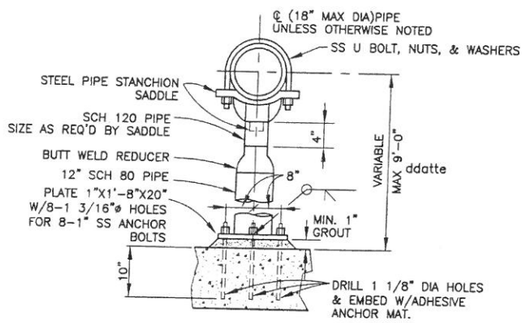

NOTE: HOT DIP GALV AFTER FABRICATION AND RECEIVE PROTECTIVE COATING

TYPICAL PIPE SUPPORT DETAIL 231 –

No.	Date	Revisions	App.

STATE OF TEXAS
LI CHUNG CHEN
98576
REGISTERED PROFESSIONAL ENGINEER
JC Chen
9-21-2011

Binkley & Barfield, Inc
consulting engineers
Texas Registration Number F-257
1110 Searmist Drive
Houston, Texas 77008-3189
(713) 869-3433

SURVEYED BY: AMANI ENG. | FIELD BOOK NO. : P-5486

CITY OF HOUSTON
DEPARTMENT OF PUBLIC WORKS AND ENGINEERING

ALMEDA SIMS WWTP & SPF IMPROVEMENTS PACKAGE II

STANDARD PIPE SUPPORT DETAILS

FILE NO:	–
WBS: R-000298-0005-4	
DRAWING SCALE	
NO SCALE	
CITY OF HOUSTON PM	
IRAJ RANJBAR, P.E.	
DWG NO. :	D-111
SHEET NO. 140 OF 147	

ACCEPTED & FILED
49061
CITY DRAWING NUMBER

ddatte

G:\115805 ADMEDA-SIMS\Package II\Cadd Dwgs_D-111 Standard Pipe Support Details.dwg Sep 22,2011 - 10:16am, RPD

BASE DRAWING FILE NAME:DWGFILENAME
DATE LAST MODIFIED:DATE
PCB file used:PCB
COLOR TABLE:

ORIGINAL SCALE IN INCHES FOR REDUCED PLANS
0 1 2

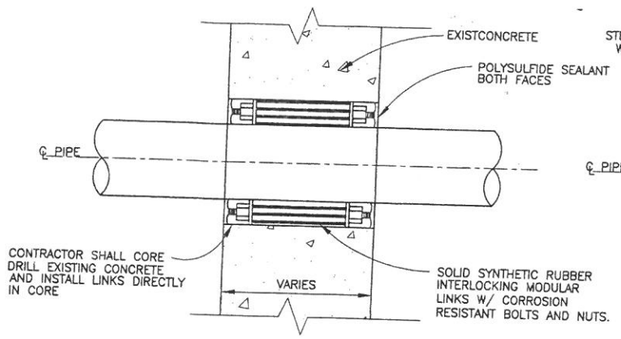

CONCRETE WALL PENETRATION (EXISTING) 240
SCALE: NONE

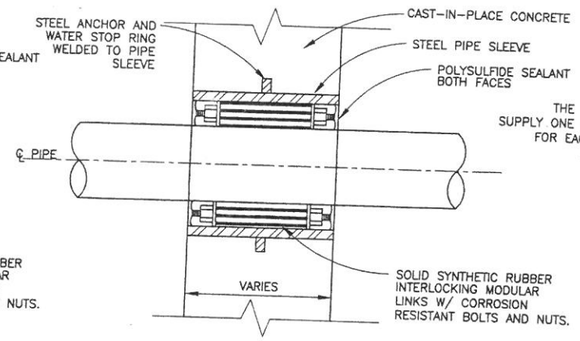

CONCRETE WALL PENETRATION (NEW) 241
SCALE: NONE

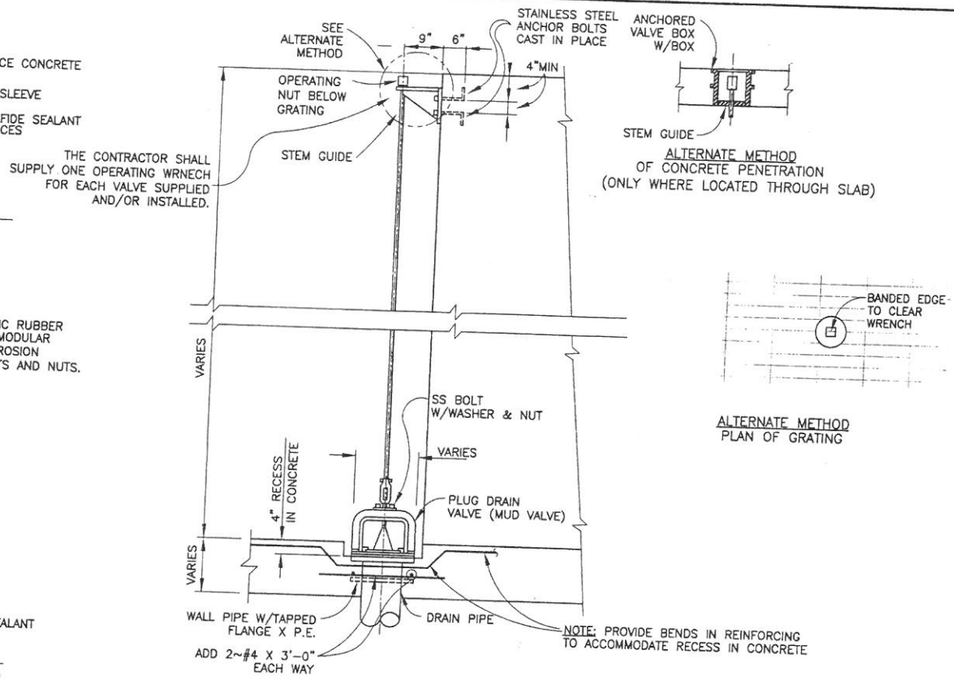

TYPICAL MUD VALVE DETAIL 242
SCALE: NONE

ALTERNATE METHOD
OF CONCRETE PENETRATION
(ONLY WHERE LOCATED THROUGH SLAB)

ALTERNATE METHOD
PLAN OF GRATING

NOTES:

1. EXCEPT WHERE SPECIFICALLY SHOWN OTHERWISE, DETAILS ON THIS SHEET APPLY TO THE ENTIRE SET OF DRAWINGS, WHETHER SPECIFICALLY REFERENCED OR NOT.

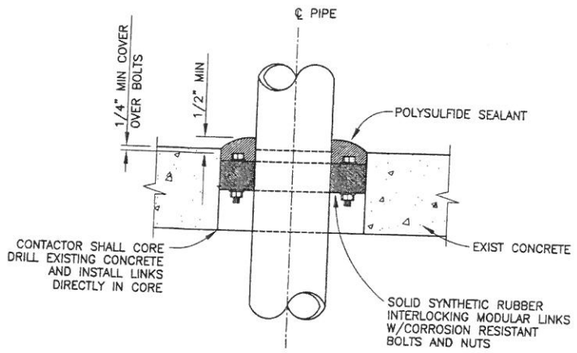

SLEEVE DETAIL 243
SCALE: NONE

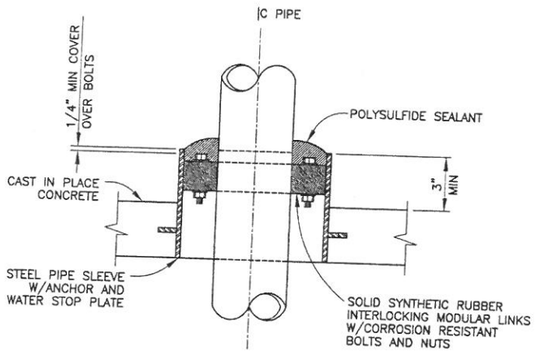

SLEEVE DETAIL 244
SCALE: NONE

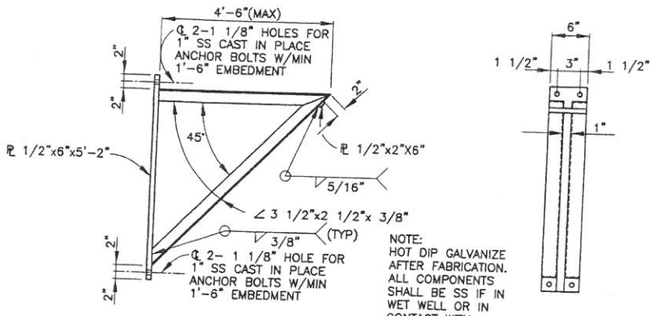

WALL BRACKET DETAIL 245
SCALE: NONE

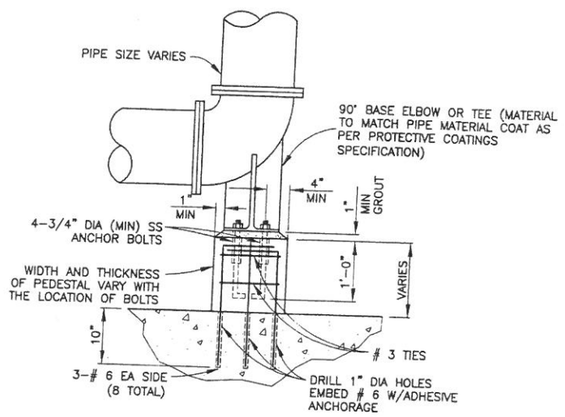

PIPE SUPPORT DETAIL 247
SCALE: NONE

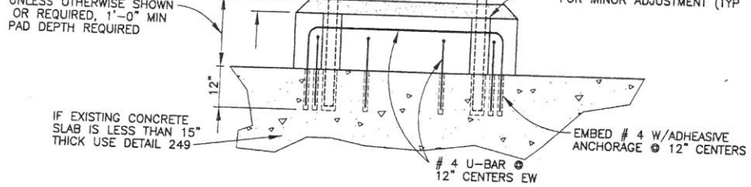

TYPICAL EQUIPMENT BASE DETAIL 248
SCALE: NONE

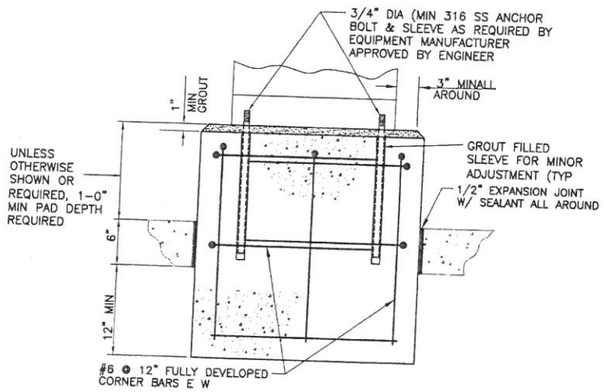

EQUIPMENT PAD DETAIL 249
SCALE: NONE

No.	Date	Revisions	App.

STATE OF TEXAS
LI CHUNG CHEN
98576
REGISTERED PROFESSIONAL ENGINEER
9-21-2011

Binkley & Barfield, Inc
consulting engineers
Texas Registration Number F-257
1710 Seamist Drive
Houston, Texas 77008-3189
(713) 869-3433

SURVEYED BY: AMANI ENG. | FIELD BOOK NO. : P-5486

CITY OF HOUSTON
DEPARTMENT OF PUBLIC WORKS AND ENGINEERING

ALMEDA SIMS WWTP & SPF IMPROVEMENTS PACKAGE II

MISCELLANEOUS STANDARD DETAILS

FILE NO:	-
WBS: R-000298-0005-4	
DRAWING SCALE	NO SCALE
CITY OF HOUSTON PM	IRAJ RANJBAR, P.E.
DWG NO. :	D-112
SHEET NO.	141 OF 147

PUBLIC WORKS AND ENGINEERING
ACCEPTED & FILED
49061
CITY DRAWING NUMBER
HOUSTON, TEXAS

BASE DRAWING FILE NAME: DWGFILENAME
DATE LAST MODIFIED: DATE
PC3 file used: PC3
COLOR TABLE:
ORIGINAL SCALE IN INCHES FOR REDUCED PLANS
0 1 2
C:\115805 AE\WORKING\Package II\Cadd Dwgs\D-112 Miscellaneous Standard Details.dwg Sep 22,2011 - 10:17am RPD

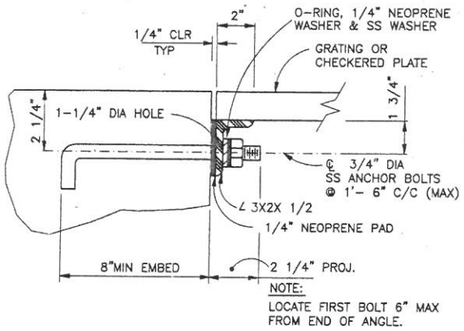

LEDGER ANGLE DETAIL 250

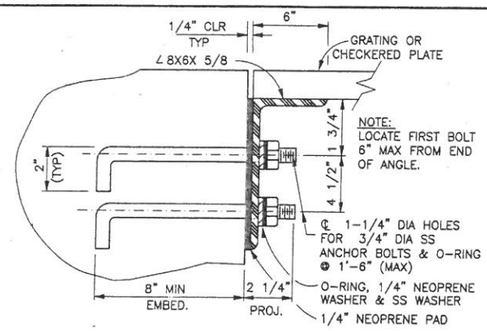

LEDGER HEAVY ANGLE DETAIL 251

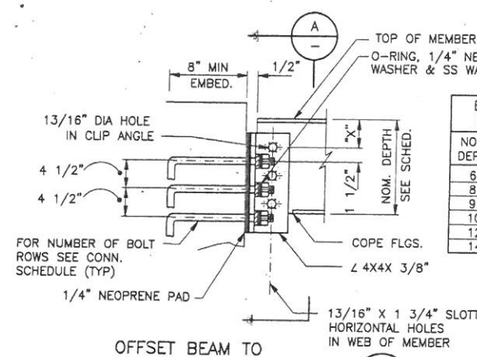

BEAM TO CONCRETE CONN. SCHEDULE

NOM. DEPTH	"X"	NUMBER OF BOLT ROWS
6	2"	2
8	2 1/2"	2
9	3"	2
10	3"	2
12	3"	3
14	3"	3

OFFSET BEAM TO CONCRETE CONNECTION 252

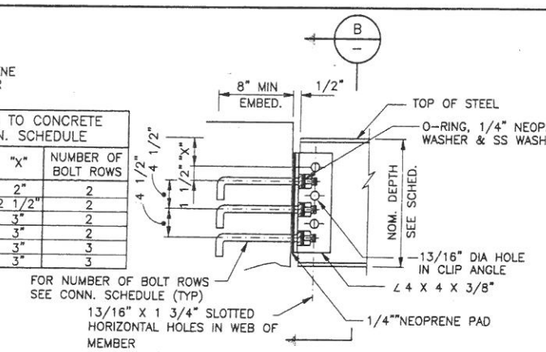

BEAM TO CONCRETE CONNECTION 253

NOTES:

1. EXCEPT WHERE SPECIFICALLY SHOWN OTHERWISE. DETAILS ON THIS SHEET APPLY TO THE ENTIRE SET OF DRAWINGS, WHETHER SPECIFICALLY REFERENCED OR NOT.
2. USE 3/4" DIA SS ANCHORS EPOXY/VINYL ESTER SET FOR EXISTING CONCRETE.

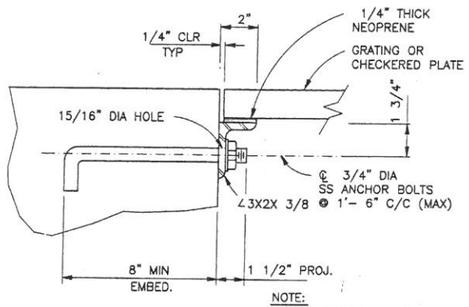

LEDGER ANGLE W/NEOPRENE DETAIL 254

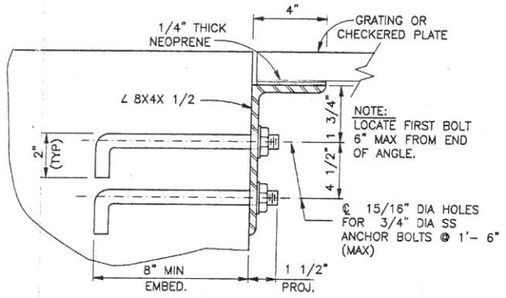

HEAVY LEDGER ANGLE W/NEOPRENE DETAIL 255

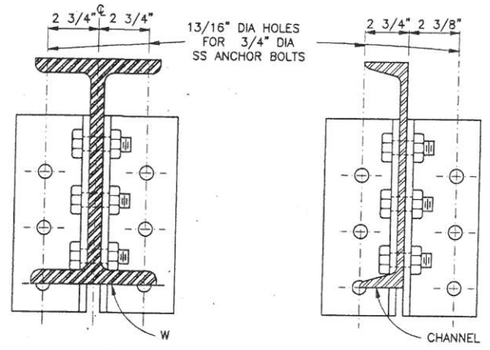

SECTION A 255

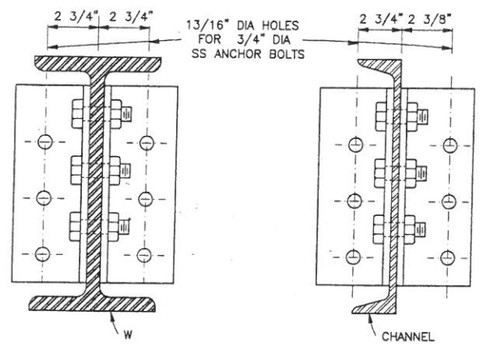

SECTION B 255

No.	Date	Revisions	App.

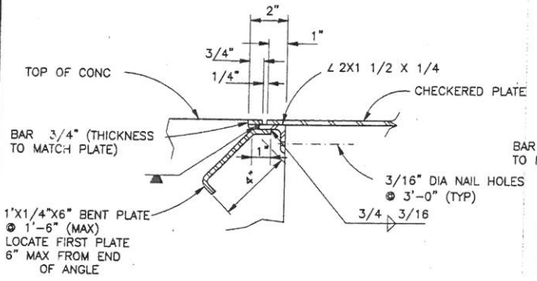

CURB ANGLE DETAIL 256

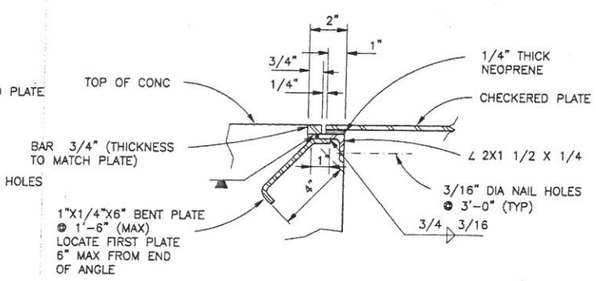

CURB ANGLE W/NEOPRENE DETAIL 257

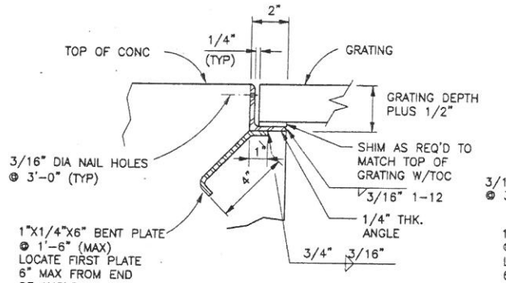

CURB ANGLE DETAIL 258

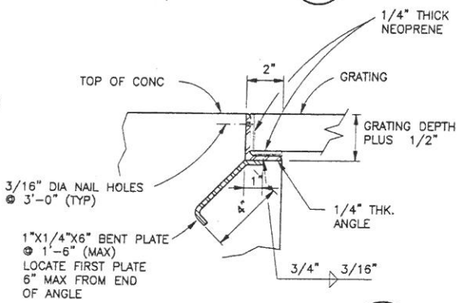

CURB ANGLE W/NEOPRENE DETAIL 259

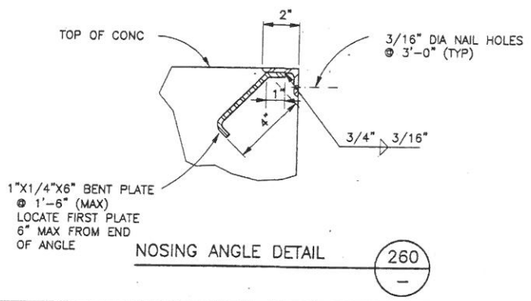

NOSING ANGLE DETAIL 260

Binkley & Barfield, Inc
consulting engineers
Texas Registration Number F-257
1710 Seamist Drive
Houston, Texas 77008-3189
(713) 869-3433

SURVEYED BY: AMANI ENG. | FIELD BOOK NO. : P-5486

CITY OF HOUSTON

DEPARTMENT OF PUBLIC WORKS AND ENGINEERING

ALMEDA SIMS WWTP & SPF IMPROVEMENTS PACKAGE II

STANDARD STRUCTURAL DETAILS

FILE NO:	–
WBS: R-000298-0005-4	
DRAWING SCALE	NO SCALE
CITY OF HOUSTON PM	IRAJ RANJBAR, P.E.
DWG NO. :	D-113
SHEET NO. 142 OF 147	

ACCEPTED & FILED
49061
CITY DRAWING NUMBER

COLOR TABLE:

ORIGINAL SCALE IN INCHES FOR REDUCED PLANS
0 1 2 3

G:\115805 ATA\Almeda-Sims\Package II\Cadd Dwgs_D-113 Standard Structural Details.dwg Sep 21,2011 - 12:47pm RPD

C:\11-805 Awarded Bid Package II\Cadd Dwgs_D-114 Standard Structural Details Handrails.dwg Sep 21,2011 - 12:49pm RPD

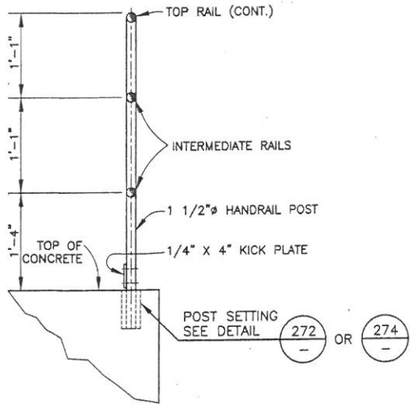

TYPICAL HANDRAIL POST W/O CURB DETAIL 270

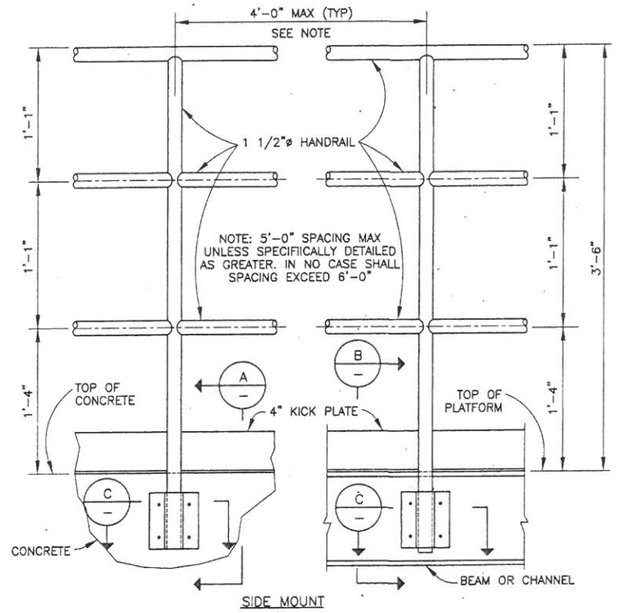

SIDE MOUNT

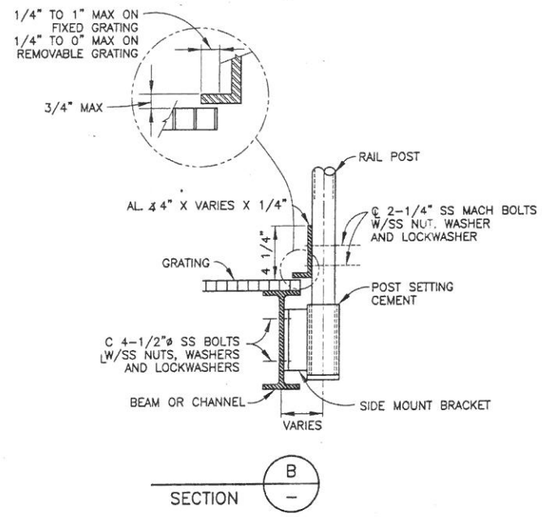

SECTION B

NOTES:

1. EXCEPT WHERE SPECIFICALLY SHOWN OTHERWISE, DETAILS ON THIS SHEET APPLY TO THE ENTIRE SET OF DRAWINGS, WHETHER SPECIFICALLY REFERENCED OR NOT.
2. COMPONENT OF HANDRAIL MAY BE ALUMINUM OR 316 SS, UNLESS MATERIAL IS SPECIFICALLY IDENTIFIED.

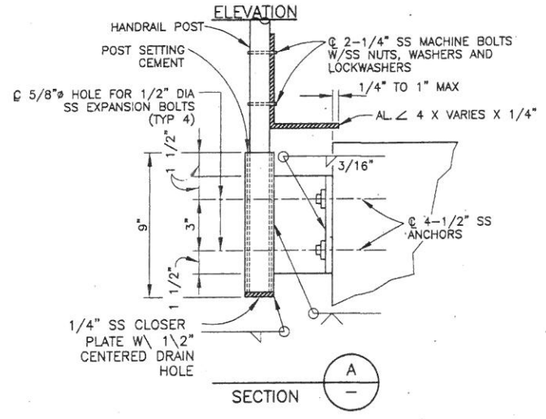

SECTION A

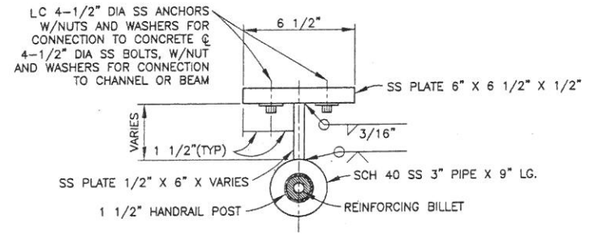

HANDRAIL SIDE MOUNT DETAIL C

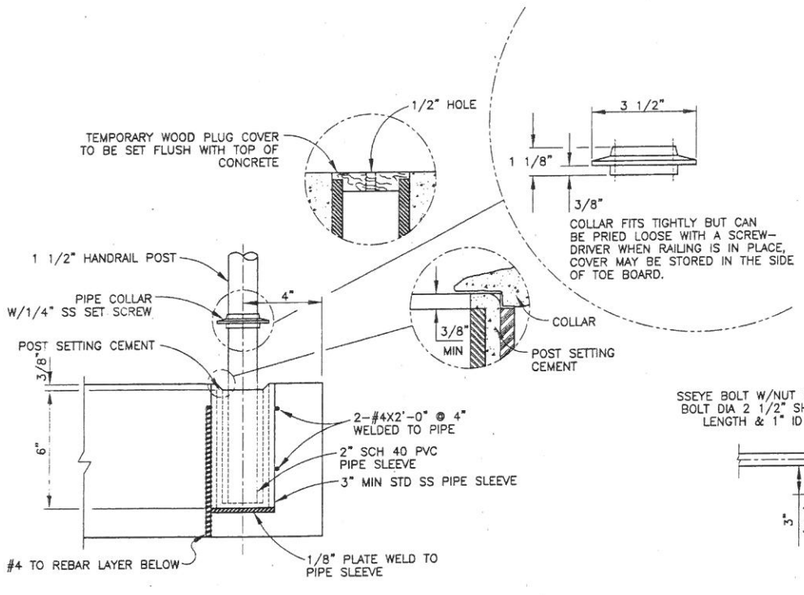

REMOVABLE HANDRAIL POST SETTING DETAIL 272

TYPICAL SIDE MOUNT HANDRAIL DETAIL 271

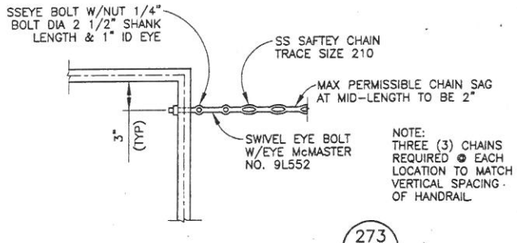

TYPICAL SAFETY CHAIN DETAIL 273

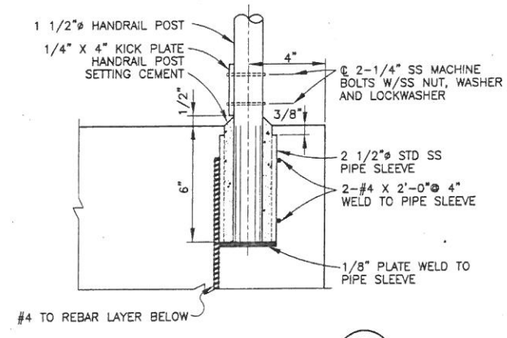

POST SETTING DETAIL 274

No.	Date	Revisions	App.

STATE OF TEXAS
BOBBY T. WHITE
21999
REGISTERED PROFESSIONAL ENGINEER
9/21/11

Binkley & Barfield, Inc
consulting engineers
Texas Registration Number F-257
1710 Seamist Drive
Houston, Texas 77008-3189
(713) 869-3433

SURVEYED BY: AMANI ENG. | FIELD BOOK NO. : P-5486

CITY OF HOUSTON
DEPARTMENT OF PUBLIC WORKS AND ENGINEERING

ALMEDA SIMS WWTP & SPF IMPROVEMENTS PACKAGE II

STANDARD STRUCTURAL DETAILS HANDRAILS

FILE NO:	-
WBS: R-000298-0005-4	
DRAWING SCALE	
NO SCALE	
CITY OF HOUSTON PM	
IRAJ RANJBAR, P.E.	
DWG NO. :	D-114
SHEET NO. 143 OF 147	

PUBLIC WORKS AND ENGINEERING ACCEPTED & FILED 49061 CITY DRAWING NUMBER HOUSTON, TEXAS

COLOR TABLE:
ORIGINAL SCALE IN INCHES FOR REDUCED PLANS
0 1 2 3

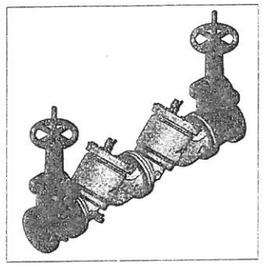

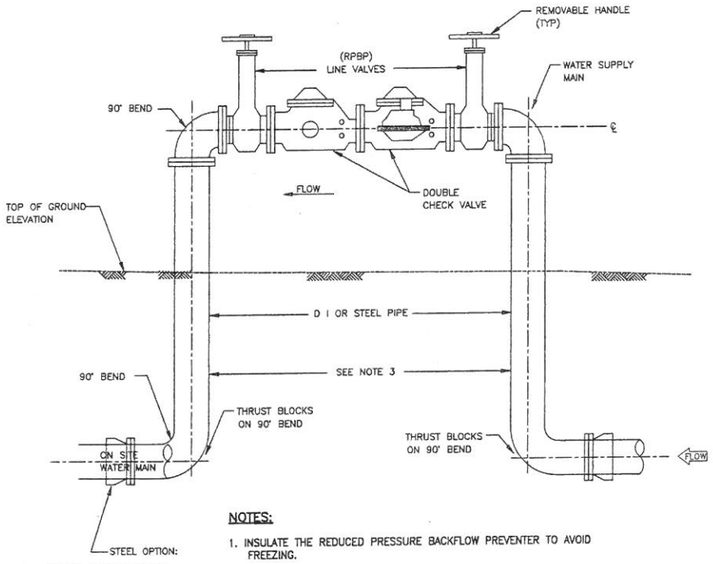

NOTES:

1. INSULATE THE REDUCED PRESSURE BACKFLOW PREVENTER TO AVOID FREEZING.
2. THE REDUCED PRESSURE BACKFLOW PREVENTER'S DISCHARGE OPENING IS TO BE A MINIMUM OF 12 INCHES ABOVE THE GROUND ELEVATION OR 100 YEAR FLOOD ELEVATION WHICHEVER IS GREATER.
3. PROVIDE RESTRAINED JOINT PIPE AS SHOWN ON PLAN & PROFILE SHEETS.

REDUCED PRESSURE BACKFLOW – PREVENTER (R P B P)

2

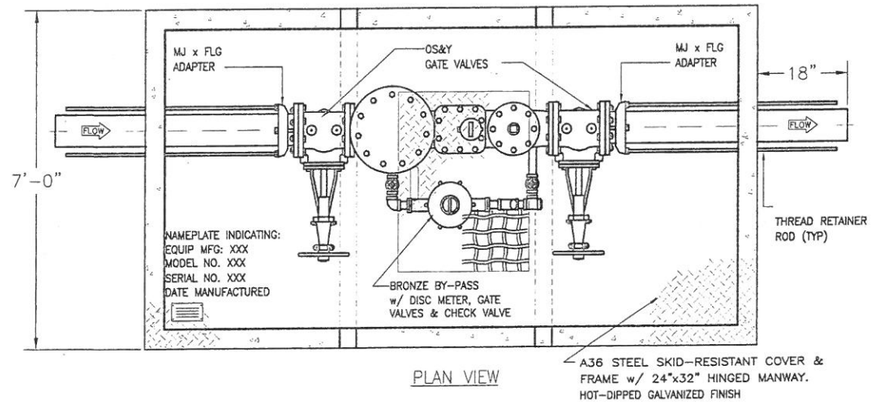

PLAN VIEW

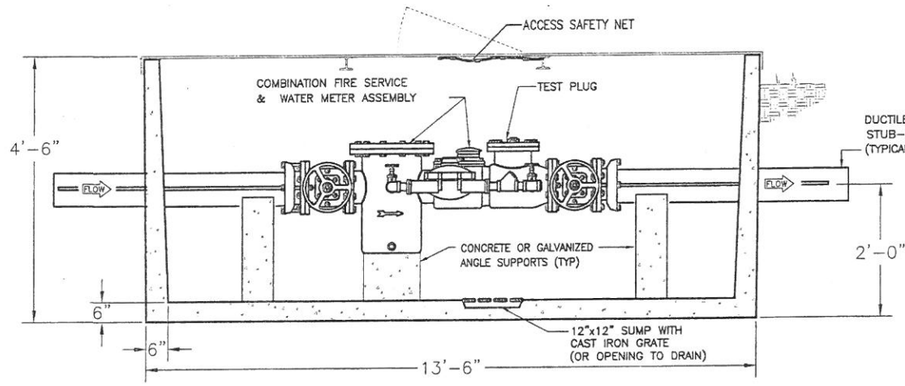

ELEVATION

COMBINATION 8" FIRE AND 4" DOMESTIC METER ASSEMBLY WITH IN–GROUND VAULT

1

MODEL	SIZE	BY PASS	L1	W1	H1	WEIGHT LBS
FMTCOH3	3"	2"	11'–6"	6'–0"	4'–3"	14,500
FMTCOH4	4"	2"	11'–6"	6'–0"	4'–3"	15,000
FMTCOH6	6"	4"	13'–6"	6'–0"	4'–3"	19,500
FMTCOH8	8"	4"	13'–6"	7'–0"	4'–3"	20,000
FMTCOH10	10"	4"	16'–0"	7'–0"	4'–3"	25,000

NOTES:

1. FOR USE ON EXISTING PIPES AND PROPOSED LINES SMALLER THAN 12" ONLY.
2. ALL THRUST BLOCKS TO BE CLASS B CONCRETE ALL CONCRETE TO BE POURED AGAINST FIRM UNDISTURBED SOIL.
3. FOR PIPE SMALLER THAN 4" DIA., USE 1 (ONE) S.F. BEARING AREA FOR ALL BENDS, TEES AND PLUGS.

90° BEND	
PIPE SIZE	BEARING AREA
4"	3 S.F.
6"	6 S.F.
8"	10 S.F.
10"	16 S.F.
12"	22 S.F.
14"	30 S.F.
18"	49 S.F.
24"	87 S.F.

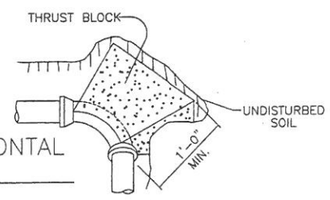

CONCRETE HORIZONTAL THRUST BLOCK

3

N.T.S.

NOTES:

1. CONTRACTOR SHALL FIELD VERIFY SITE CONDITIONS, AND PERFORM FIELD PROBING AND POTHOLE TEST TO VERIFY EXISTING UNDERGROUND CONDITIONS.
2. REMOVAL OF THE EXIST WATER METER AND REDUCED PRESSURE BACKFLOW PREVENTER (RPBP), AND INSTALLATION OF NEW METER AND RPBP MUST BE PERFORMED BY A CITY OF HOUSTON AUTHORIZED PLUMBER. CONTACT CITY OF HOUSTON UTILITY DEPT. TO OBTAIN THE CURRENT LIST OF AUTHORIZED PLUMBERS.
3. OLD METER SHALL BE RETURNED TO THE CITY OF HOUSTON ASSIGNED LOCATION. NEW METER INSTALLATION SHALL BE APPROVED BY THE CITY OF HOUSTON METER INSPECTOR.
4. WATER METER SHALL BE TESTED AND APPROVED BY THE CITY OF HOUSTON METER INSPECTOR.
5. REFER TO SPEC 02526 FOR DETAILS OF WATER METER REQUIREMENTS.

No.	Date	Revisions	App.

STATE OF TEXAS
LI CHUNG CHEN
98576
REGISTERED PROFESSIONAL ENGINEER
9-21-2011

Binkley & Barfield, Inc
consulting engineers
Texas Registration Number F-257
1710 Seamist Drive
Houston, Texas 77008-3189
(713) 869-3433

SURVEYED BY: AMANI ENG. | FIELD BOOK NO. : P-5486

CITY OF HOUSTON
DEPARTMENT OF PUBLIC WORKS AND ENGINEERING

ALMEDA SIMS WWTP & SPF IMPROVEMENTS PACKAGE II
FIRE SERVICE WATER METER AND WATER LINE STANDARD DETAILS

FILE NO:	–
WBS: R–000298–0005–4	
DRAWING SCALE	NO SCALE
CITY OF HOUSTON PM	IRAJ RANJBAR, P.E.
DWG NO. :	D–115
SHEET NO.	144 OF 147

PUBLIC WORKS AND ENGINEERING ACCEPTED & FILED 49061 CITY DRAWING NUMBER HOUSTON, TEXAS

G:\115805 Almeda Sims Package II\Cadd Dwgs_D–115 Fire Service Meter and Standard Water Line Details.dwg Sep 22,2011 – 10:21am RPD

COLOR TABLE:

ORIGINAL SCALE IN INCHES FOR REDUCED PLANS
0 1 2 3

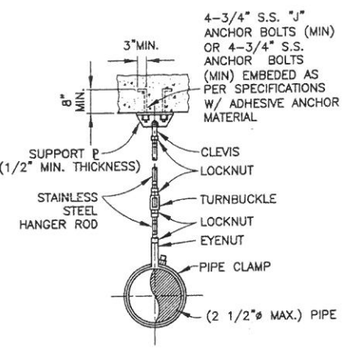

PIPE HANGER DETAILS 220 / –

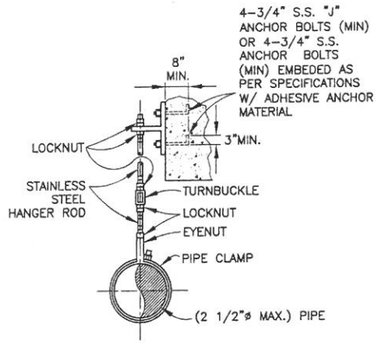

PIPE HANGER DETAILS 221 / –

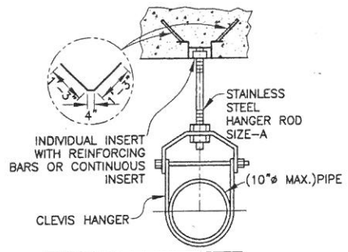

PIPE SIZE	A HANGER ROD
2"& SMALLER	3/8"
2 1/2"	1/2"
3" THRU 4"	5/8"
6" THRU 10"	3/4"
12"	7/8"

PIPE HANGER DETAILS 222 / –

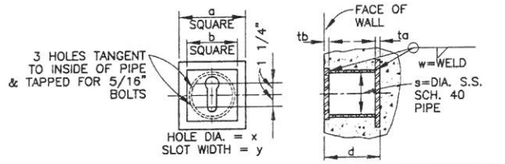

BOLT SIZE	DIMENSIONS IN INCHES								
	a	ta	b	tb	d	s	w	x	y
3/4	7	1/2	5 1/2	3/8	5 1/2	4	1/4	1 7/16	7/8
7/8	9	5/8	7	3/4	7 1/2	5	3/8	1 13/16	1
1	9	5/8	7	3/4	7 1/2	5	3/8	1 13/16	1 1/8
1 1/8	11	7/8	8	3/4	9	6	3/8	2 1/4	1 1/4
1 1/4	11	7/8	8	3/4	9	6	3/8	2 1/4	1 3/8

PIPE HANGER DETAILS 223 / –

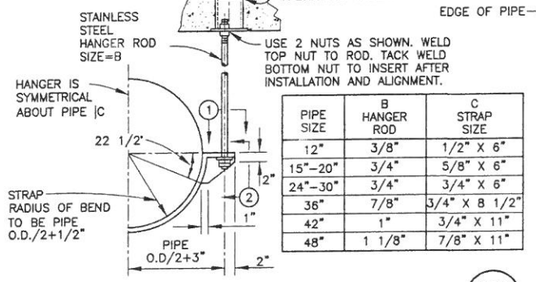

PIPE SIZE	B HANGER ROD	C STRAP SIZE
12"	3/8"	1/2" X 6"
15"-20"	3/4"	5/8" X 6"
24"-30"	3/4"	3/4" X 6"
36"	7/8"	3/4" X 8 1/2"
42"	1"	3/4" X 11"
48"	1 1/8"	7/8" X 11"

PIPE HANGER DETAILS 224 / –

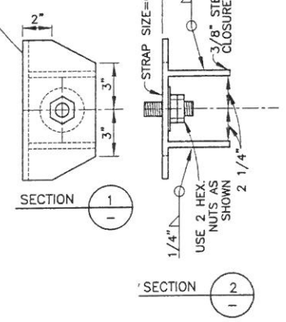

NOTES:

1. EXCEPT WHERE SPECIFICALLY SHOWN OTHERWISE, DETAILS ON THIS SHEET APPLY TO THE ENTIRE SET OF DRAWINGS, WHETHER SPECIFICALLY REFERENCED OR NOT.
2. SUPPORT SPACING SHALL BE AS PER SPECIFICATIONS.

No.	Date	Revisions	App.

STATE OF TEXAS
LI CHUNG CHEN
98576
REGISTERED PROFESSIONAL ENGINEER
9-21-2011

Binkley & Barfield, Inc
consulting engineers
Texas Registration Number F-257
1710 Seamist Drive
Houston, Texas 77008-3189
(713) 869-3433

SURVEYED BY: AMANI ENG. | FIELD BOOK NO. : P-5486

CITY OF HOUSTON
DEPARTMENT OF PUBLIC WORKS AND ENGINEERING

ALMEDA SIMS WWTP & SPF IMPROVEMENTS PACKAGE II

STANDARD PIPE HANGER DETAILS

FILE NO:	–
WBS:	R-000298-0005-4
DRAWING SCALE	NO SCALE
CITY OF HOUSTON PM	IRAJ RANJBAR, P.E.
DWG NO. :	D-116
SHEET NO.	145 OF 147

PUBLIC WORKS AND ENGINEERING ACCEPTED & FILED 49061 CITY DRAWING NUMBER HOUSTON, TEXAS

G:\115805 Almeda Sims Package II\Cadd Dwgs_D-116 Standard Pipe Hanger Details.dwg Sep 22,2011 - 10:43am RPD
COLOR TABLE:
ORIGINAL SCALE IN INCHES FOR REDUCED PLANS
0 1 2 3

V:\Cadd\2009\U9017 B&B-AlmedaSimsPlant\TCP\TCP Rev 1.dwg Sep 21,2011 - 9:31am calpough

TYPICAL POSTED SPEED ON ALMEDA RD. (FM 521) - 45MPH
DATE TIME WORK ONLY.

CONTRACTOR HAS TO SUBMIT THIS TCP TO TxDOT AND OBTAIN APPROVAL

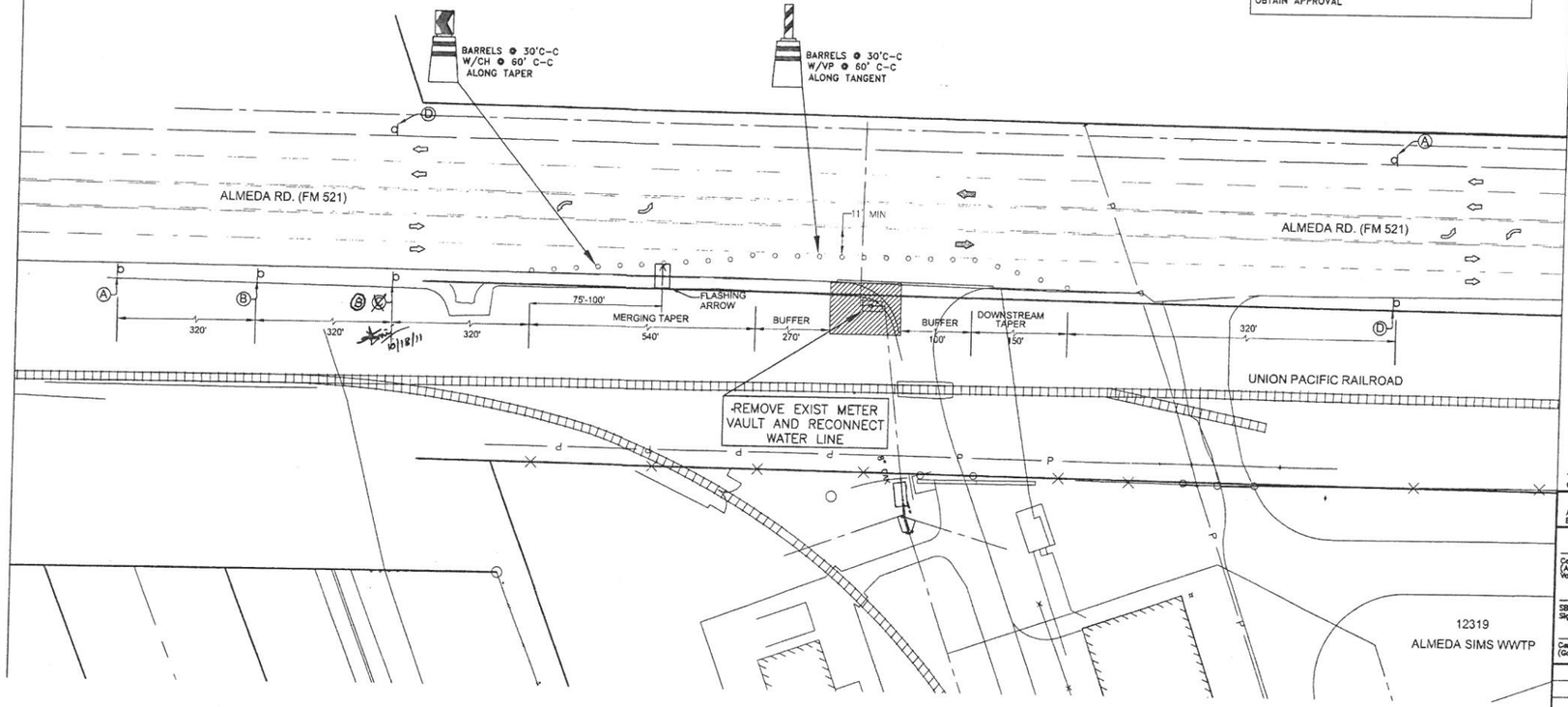

TYPICAL TRAFFIC CONTROL PLAN ALONG ALMEDA RD.

CITY OF HOUSTON
Department of Public Works and Engineering
Traffic and Transportation Division
Traffic Notes

1. CONTRACTOR SHALL PROVIDE AND INSTALL TRAFFIC CONTROL DEVICES IN CONFORMANCE WITH PART VI OF THE TEXAS MANUAL ON UNIFORM TRAFFIC CONTROL DEVICES (T.M.U.T.C.D., MOST RECENT EDITION WITH REVISIONS) DURING CONSTRUCTION.
2. NO WORK AND LANES SHALL BE CLOSED IN RESIDENTIAL AREA FROM 7:00 PM TO 7:00 AM. NO LANES CLOSED 7-9 AM. AND 4-6 PM., MONDAY THROUGH FRIDAY
3. CONTRACTOR SHALL MAINTAIN ONE LANE OF TRAFFIC IN EACH DIRECTION DURING WORKING HOURS.

3a. CONTRACTOR SHALL MAINTAIN LANE(S) ACCORDING TO TRAFFIC CONTROL PLAN(S) DURING WORKING HOURS.

4. CONTRACTOR SHALL COVER OPEN EXCAVATIONS WITH STEEL PLATES ANCHORED PROPERLY DURING NON-WORKING HOURS AND OPEN LANE FOR NORMAL TRAFFIC FLOW.
5. OFF DUTY UNIFORMED POLICE OFFICER(S)/FLAGGER(S) IS/ARE REQUIRED TO DIRECT TRAFFIC WHEN LANES ARE BLOCKED.

6a. IN THE EVENT WHEN NO "TRAFFIC CONTROL PLANS" EXIST AS A PART OF CONTRACT DRAWINGS, CONTRACTOR SHALL PREPARE PLANS* AND SUBMIT TO PLAN REVIEW SECTION FOR APPROVAL TEN WORKING DAYS PRIOR TO IMPLEMENTATION.

6b. IF THE CONTRACTOR CHOOSES TO USE A DIFFERENT METHOD OF "TRAFFIC CONTROL PLANS" DURING THE CONSTRUCTION THAN WHAT IS OUTLINED IN THE CONTRACT DRAWINGS, (S)HE SHALL BE RESPONSIBLE TO PREPARE AND SUBMIT AN ALTERNATE SET OF PLANS* TO PLAN REVIEW SECTION FOR APPROVAL TEN WORKING DAYS PRIOR TO IMPLEMENTATION.

*THESE PLANS SHALL BE DRAWN TO ACCEPTABLE SCALE ON REPRODUCIBLE MYLARS AND SEALED BY A REGISTERED PROFESSIONAL ENGINEER IN THE STATE OF TEXAS. PLANS SHALL BECOME A PART OF THE CONTRACT DRAWINGS.

7. APPROVED COPIES OF "TRAFFIC CONTROL PLANS AND LANE/SIDEWALK CLOSURE PERMITS SHALL BE AVAILABLE FOR INSPECTION AT JOB SITE AT ALL TIMES.

*CONTRACTOR MUST SECURE "LANE/SIDEWALK CLOSURE PERMITS" FROM CITY'S TRAFFIC MANAGEMENT AND MAINTENANCE BRANCH BEFORE CLOSING A LANE OR SIDEWALK. THE REQUEST MUST BE MADE AT LEAST TEN BUSINESS DAYS PRIOR TOT THE DATE FOR WHICH THE CLOSURE IS SOUGHT. NOTE THAT WORKING HOURS MAY BE RESTRICTED OR THE REQUEST MAY BE DENIED. CALL 713-837-7280 FOR AN APPLICATION.

SPACING FOR CHANNELING DEVICES

A. PLASTIC DRUMS ON MERGING TAPER @ 30' C-C WITH CHEVRON SIGN @ 60' C-C AND TYPE "C" WARNING LIGHT (FOR OVERNIGHT CLOSURE)
B. PLASTIC DRUMS ON DOWNSTREAM TAPER @35' C-C
C. PLASTIC DRUMS ON RADII @5'C-C
D. PLASTIC DRUMS ON TANGENT @35'C-C WITH VERTICAL PANEL @70'C-C AND TYPE "C" WARNING LIGHT @70'C-C (FOR OVERNIGHT CLOSURE)
E. PLASTIC DRUMS IN FRONT OF CONSTRUCTION ZONE @20' C-C WITH VERTICAL PANEL @40' C-C AND TYPE "A" WARNING LIGHT @ 40' C-C (FOR OVERNIGHT CLOSURE)
F. CONCRETE TRAFFIC BARRIER (C.T.B.) OR LOW PROFILE CONCRETE TRAFFIC BARRIER (L.P.C.T.B) WITH REFLECTORS @11' C-C IF PAVEMENT DROP IS MORE THAN TWELVE INCHES (12") OR PLASTIC DRUMS W/GUARD RAIL MOUNTED.

NOTE:- SPACINGS SHOWN ON TRAFFIC CONTROL PLANS SHALL BE SUPERSEDED BY THE ABOVE SPACINGS. SPACINGS MAY BE ADJUSTED TO PROVIDE DRIVEWAYS, INTERSECTIONS AND/OR MEDIAN OPENINGS.

LEGEND

- EXISTING TRAFFIC PATTERN
- PROPOSED TRAFFIC PATTERN
- PLASTIC DRUMS

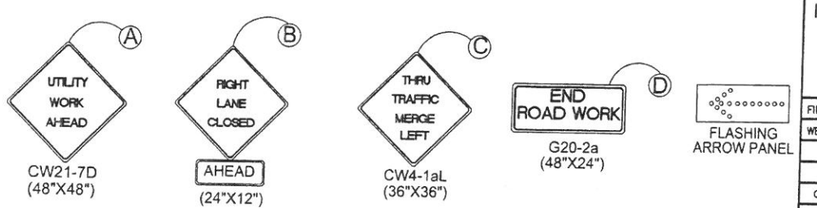

COLOR TABLE:

ORIGINAL SCALE IN INCHES FOR REDUCED PLANS
3
2
1
0

TO ARRANGE FOR LINES TO BE TURNED OFF OR MOVED, CALL CENTERPOINT AT 713-207-7777.

PRIVATE UTILITY LINES SHOWN
AT LEAST 48 HOURS BEFORE EXCAVATING IN STREET R.O.W. OR EASEMENTS CALL THE LONE STAR NOTIFICATION 713-223-4567.

Date:
CenterPoint Energy/Electric Facilities
(Approval only for crossing underground ductlines, unless otherwise n
Valid at time of review only.

Date:
SBC Approved for underground conduit facilities only.
Signature valid for one year.

Date:
CenterPoint Energy/Gas Facilities
(Gas service lines are not shown)

No.	Date	Revisions	Apr

STATE OF TEXAS
SRINIVAS A. VELLORE
99425
LICENSED PROFESSIONAL ENGINEER
01/26/12

AMANI ENGINEERING, INC.
8313 SOUTHWEST FREEWAY
SUITE 350
HOUSTON, TEXAS 77074
TEL: (713) 270-5700
TBPE REG. NO.: F-4528

Binkley & Barfield, Inc
consulting engineers
Texas Registration Number F-257
1710 Seamist Drive
Houston, Texas 77008-3189
(713) 869-3433

SURVEYED BY: AMANI ENG. | FIELD BOOK NO. : P-5486

CITY OF HOUSTON
DEPARTMENT OF PUBLIC WORKS AND ENGINEERING

ALMEDA SIMS WWTP & SPF IMPROVEMENTS PACKAGE II

TRAFFIC CONTROL PLAN FOR WATER METER WORKS

FILE NO:	-
WBS: R-000298-0005-4	
DRAWING SCALE	1:40
CITY OF HOUSTON PM	IRAJ RANJBAR, P.E.
DWG NO. :	T-100
SHEET NO.	146 OF 147

PUBLIC WORKS AND ENGINEERING
ACCEPTED & FILED
19061
CITY DRAWING NUMBER
HOUSTON, TEXAS

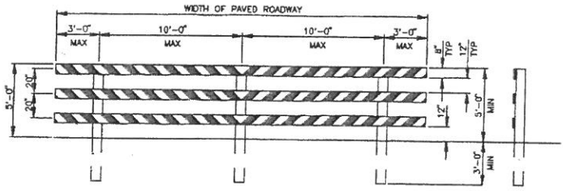

TYPE III BARRICADE
FOR END OF ROAD

FOR TYPE III BARRICADE FOR END OF ROAD, THE THREE (3) RAILS SHALL BE REFLECTIVE RED AND RELFLECTIVE WHITE SRIPES ON SIDE FACING TRAFFIC

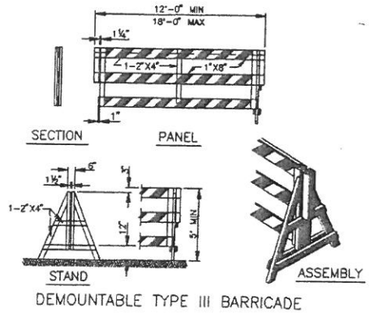

DEMOUNTABLE TYPE III BARRICADE

BARRICADE NOTES

THE MOST RECENT EDITION OF THE TEXAS MANUAL ON UNIFORM TRAFFIC CONTROL DEVICES, AND IT'S REVISIONS, SHALL GOVERN THE CONSTRUCTION AND USE OF ALL ITEMS HEREIN DESCRIBED.

CHANNELIZATION DEVICES OTHER THAN BARRICADES SHOULD NORMALLY BE USED FOR CHANNELIZATION PURPOSES.

BARRICADES SHOULD NORMALLY BE PLACED PERPENDICULAR TO THE TRAFFIC FLOW. OTHER CHANNELIZING DEVICES, SUCH AS DRUMS, VERTICAL PANELS OR PORTABLE BARRIERS, SHOULD BE USED WHERE NEEDED TO SEPARATE TRAFFIC FROM THE WORK AREA. IN ALL CASES, THE BARRICADES SHOULD BE SO LOCATED AS TO MOST ADVANTAGEOUSLY WARN AND DIRECT TRAFFIC.

BARRICADES MAY BE DESIGNED AND CONSTRUCTED FROM WOOD OR ANY OTHER SUITABLE MATERIAL IN A MANNER APPROVED BY THE DEPARTMENT OF TRAFFIC AND TRANSPORTATION. THE CONSTRUCTION DETAILS SHOWN HEREON ARE TYPICAL AND ARE SUGGESTED DETAILS FOR WOOD SUPPORT SYSTEMS FOR BARRICADES. THE DETAILS OF RAIL WIDTH AND STRIPING, NUMBER AND SPACING OF RAILS, MINIMUM LENGTH AND HEIGHT (ABOVE PAVEMENT) OF RAILS MUST BE ADHERED TO WHEN ALTERNATE DESIGNS ARE USED.

BARRICADES ARE TO BE CONSTRUCTED OF CLEAN SOUND MATERIAL. ALL SURFACES ABOVE GROUND, WHICH ARE NOT STRIPED, SHALL BE WHITE EXCEPT THE UNPAINTED GALVANIZED METAL OR ALUMINUM COMPONENTS MAY BE USED.
COMPONENTS MADE OF LUMBER SHALL BE PAINTED WITH A MINIMUM OF TWO COATS OF AN APPROVED BRAND OF WHITE PAINT TO SECURE THOROUGH COVERAGE AND A UNIFORM WHITE COLOR.

THE REFLECTORIZED WHITE AND REFLECTORIZED ORANGE (REFLECTORIZED RED) STRIPES FOR BARRICADES, DRUMS AND VERTICAL PANELS SHALL BE CONSTRUCTED OF "HIGH INTESITY SHEETING AND SHALL BE MAINTAINED TO MEET THE APPEARANCE, COLOR AND REFLECTIVITY REQUIREMENTS SET BY DOTT.

THE CONTRACTOR SHALL MAINTAIN EACH BARRICADE IN A CLEAN AND GOOD CONDITION.

BARRICADES SHALL BE REMOVED UPON COMPLETION OF THE WORK AND/OR THE ELIMINATION OF THE HAZARD ON ANY SECTION.

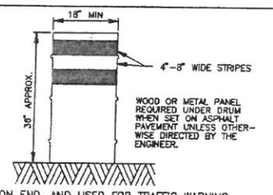

DRUMS

DRUMS, SET ON END, AND USED FOR TRAFFIC WARNING OR CHANNELIZATION SHALL BE APPROX 36" IN HEIGHT AND A MIN OF 18" IN DIAMETER. THE CONTRACTOR, AT HIS OPTION, MAY USE DRUMS MADE FROM STEEL BARRELS OR BLACK POLYETHYLENE PLASTIC DRUM LINERS WEIGHING APPROX EIGHT POUNDS EACH. THE MARKINGS ON DRUMS SHALL BE HORIZONTAL, CIRCUMFERENTIAL, REFLECTORIZED ORANGE AND REFLECTORIZED WHITE STRIPES, 4 TO 8 INCHES WIDE. THE FIRST REFLECTORIZED STRIPE SHOULD START WITHIN TWO (2) INCHES OF THE TOP OF THE DRUM. THERE SHALL BE AT LEAST TWO ORANGE AND TWO WHITE STRIPES ON EACH DRUM. IF THERE ARE NON-REFLECTORIZED SPACES BETWEEN THE HORIZONTAL ORANGE AND WHITE STRIPES, THEY SHALL BE NO MORE THAN 2 INCHES WIDE. METAL DRUMS SHALL BE PAINTED BLACK OR ORANGE BEFORE REFLECTORIZED STRIPES ARE ADDED. ALL DRUMS ON PROJECT WILL BE THE SAME COLOR. WHEN DRUMS ARE PLACED IN THE ROADWAY, APPROPIATE WARNING SIGNS SHOULD BE USED. DURING HOURS OF DARKNESS, A FLASHING WARNING LIGHT SHOULD BE PLACED ON DRUMS USED SINGLY AS A WARNING DEVICE. STEADY BURN ELECTRIC LIGHTS OR DELINEATORS SHOULD BE PLACED ON DRUMS USED IN SERIES FOR TRAFFIC CHANNELIZATION. DRUMS SHALL BE WEIGHTED WITH SAND TO THE EXTENT INDICATED IN THE PLANS.

CWI-8 CHEVRON SIGNS, CWI-6A ARROW SIGNS OR VP-1 VERTICAL PANELS MOUNTED ABOVE DRUMS MAY BE USED AS SUPPLEMENTS TO DRUM DELINEATION.

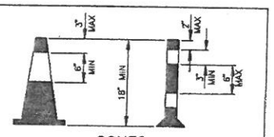

CONES

TRAFFIC CONES AND TUBULAR MARKERS SHALL BE A MIN OF 18" INCHES IN HEIGHT WITH A BROADENED BASE AND MAY BE MADE OF VARIOUS MATERIALS TO WITHSTAND IMPACT WITHOUT DAMAGE TO THEMSELVES OR TO VEHICLES. LARGER SIZES SHOULD BE USED ON FREEWAYS AND OTHER ROADWAYS WHERE SPEED ARE RELATIVELY HIGH OR WHERE EVER MORE CONSPICUOUS GUIDANCE IS NEEDED. ORANGE SHALL BE THE PREDOMINANT COLOR ON CONES AND TUBULAR MARKERS. THEY SHOULD BE KEPT CLEAN AND BRIGHT FOR MAX TARGET VALUE. FOR NIGHTTIME USE THEY SHALL BE REFLECTORIZED OR EQUIPPED WITH LIGHTING DEVICES FOR MAX VISIBILITY. REFLECTORIZED MATERIAL SHALL HAVE A SMOOTH, SEALED OUTER SURFACE WHICH WILL DISPLAY THE SAME APPROX COLOR DAY AND NIGHT.

REFLECTORIZATION OF TUBULAR MARKERS SHALL BE A MIN OF TWO THREE-INCH BANDS PLACED A MAX OF 2" FROM THE TOP WITH A MAX OF 6" BETWEEN THE BANDS. REFLECTORIZATION OF CONES SHALL BE PROVIDED BY A MIN 6" BAND PLACED A MAX OF 3" FROM THE TOP.

CONES OR TUBULAR MARKERS ARE GENERALLY ONLY SUITABLE FOR TEMPORARY USAGE (UP TO 8 HOURS) WITH OTHER CHANNELIZATION DEVICES SUCH AS VERTICAL PANELS OR BARRICADES PREFERRED FOR LONGER TERM USAGE. CARE SHOULD BE TAKEN TO INSURE THAT THEY REMAIN IN THEIR PROPER LOCATION AND IN AN UPRIGHT POSITION.

VERTICAL PANELS (VP)

VERTICAL PANELS ARE NORMALLY USED AS CHANNELIZING DEVICES TO INDICATE TANGENT OR NEARLY TANGENT ROADWAY ALIGNMENT WHERE GOOD TARGET VALUE OF A DEVICE IS NEEDED IN DAYTIME AS WELL AS THE NIGHTTIME. IN ADDITION, VERTICAL PANELS SHOULD BE USED AT THE EDGE OF SHOULDER DROP-OFFS AND OTHER SUCH AREAS AS LANE TRANSITIONS WHERE POSITIVE DAY AND NIGHT DELINEATION MAY BE REQUIRED. VERTICAL PANELS SHOULD BE MOUNTED BACK TO BACK IF USED AT THE EDGE OF CUTS ADJACENT TO TWO-WAY TWO LANE ROADWAYS. STRIPES SHOULD ALWAYS SLOPE DOWNWARD TOWARD THE TRAVELED WAY.

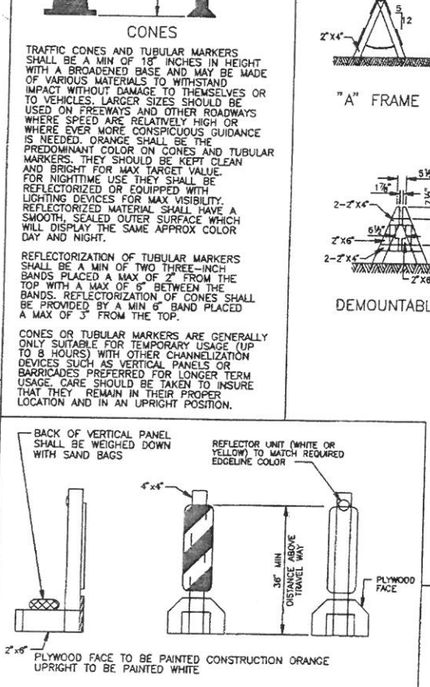

TYPICAL PORTABLE VERTICAL PANEL
OR DELINEATOR

OTHER SIMILAR SUPPORTS MAY BE USED WHEN APPROVED OR DIRECTED BY THE COH DEPT OF TRAFFIC AND TRANSPORTATION

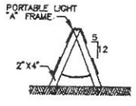

"A" FRAME

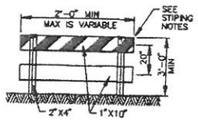

TYPE I

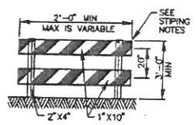

TYPE II

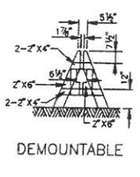

DEMOUNTABLE

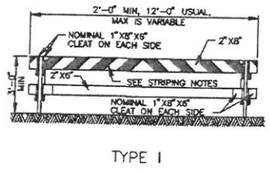

TYPE I

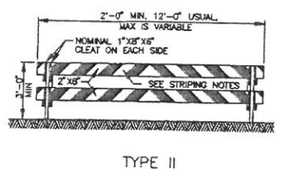

TYPE II

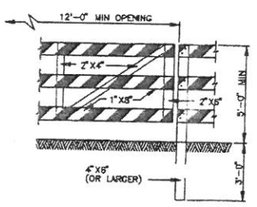

GATE FOR
TYPE III BARRICADE

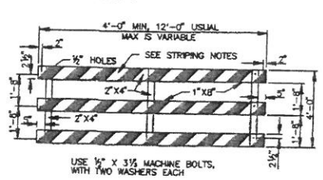

PANEL FOR
TYPE III BARRICADE

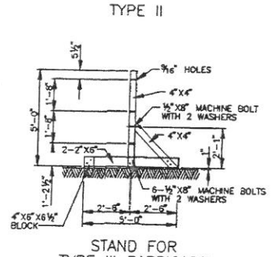

STAND FOR
TYPE III BARRICADE

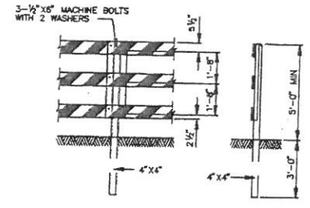

POST FOR
TYPE III BARRICADE

STRIPING FOR BARRICADE

FOR ALL TYPES OF BARRICADES WITH RAILS LESS THAN 3'-0" LONG, STRIPES 4" WIDE SHALL BE USED. IDENTIFICATION MARKINGS MAY BE SHOWN ONLY ON BACK SIDE OF BARRICADE RAILS.

STRIPING SHOULD COVER THE FULL WIDTH OF THE RAIL. STRIPING OF RAILS, PANELS, ETC. SHOULD SLOPE DOWNWARD AT AN ANGLE OF 45° DEGREES IN DIRECTIONS TRAFFIC IS TO PASS.

WHERE A BARRICADE EXTENDS ENTIRELY ACROSS A ROADWAY, IT IS DESIRABLE THAT THE STRIPES SLOPE DOWNWARD IN THE DIRECTION TOWARD WHICH TRAFFIC MUST TURN IN DETOURING. WHEN BOTH RIGHT AND LEFT TURNS ARE PROVIDED FOR, THE CHEVRON STRIPING MAY SLOPE DOWNWARD IN BOTH DIRECTIONS FROM THE CENTER OF THE BARRICADE.

CITY OF HOUSTON
DEPARTMENT OF PUBLIC WORKS AND ENGINEERING
ENGINEERING, CONSTRUCTION AND REAL ESTATE DIVISION

BARRICADE STANDARD

(NOT TO SCALE)

APPROVED BY: CITY ENGINEER	APPROVED BY: DIRECTOR OF PUBLIC WORKS AND ENGINEERING
EFF DATE: OCT-01-2002	DWG NO: 01580-01

COLOR TABLE:

ORIGINAL SCALE IN INCHES FOR REDUCED PLANS
0 1 2 3

V:\Cadd\2009\09017 B&B-AlmedaSimsPlant\TCP\TCP Details.dwg Sep 21,2011 - 8:11am calpaugh

No.	Date	Revisions

STATE OF TEXAS
SRINIVAS A. VELLORE
99425
REGISTERED PROFESSIONAL ENGINEER
01/26/12

AMANI ENGINEERING, INC.
8313 SOUTHWEST FREEWAY
SUITE 350
HOUSTON, TEXAS 77074
TEL: (713) 270-5700
TBPE REG. NO.: F-4528

Binkley & Barfield, Inc
consulting engineers
Texas Registration Number F-257
1710 Seamist Drive
Houston, Texas 77008-3189
(713) 869-3433

SURVEYED BY: AMANI ENG. | FIELD BOOK NO. : P-548

CITY OF HOUSTON
DEPARTMENT OF PUBLIC WORKS AND ENGINEERING

ALMEDA SIMS WWTP & SPF IMPROVEMENTS PACKAGE II

PROPOSED CHEMICAL FEED FACILITY DRIVEWAY

TRAFFIC CONTROL PLAN
BARRICADE DETAILS

FILE NO:	-
WBS: R-000298-0005-4	
DRAWING SCALE	AS SHOWN
CITY OF HOUSTON PM	IRAJ RANJBAR, P.E.
DWG NO. :	T-101
SHEET NO.	147 OF 147

PUBLIC WORKS AND ENGINEERING ACCEPTED & FILED 49061- CITY DRAWING NUMBER HOUSTON, TEXAS

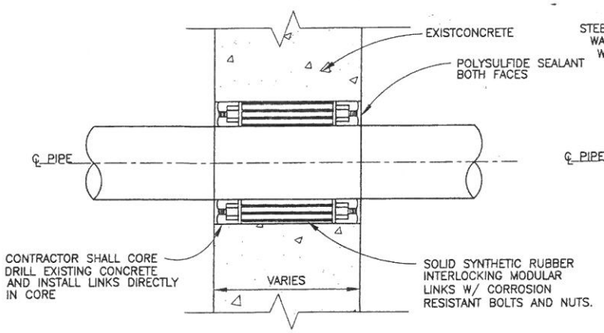

CONCRETE WALL PENETRATION (EXISTING) 240
SCALE: NONE

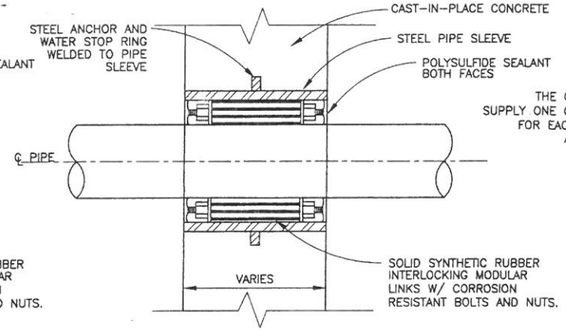

CONCRETE WALL PENETRATION (NEW) 241
SCALE: NONE

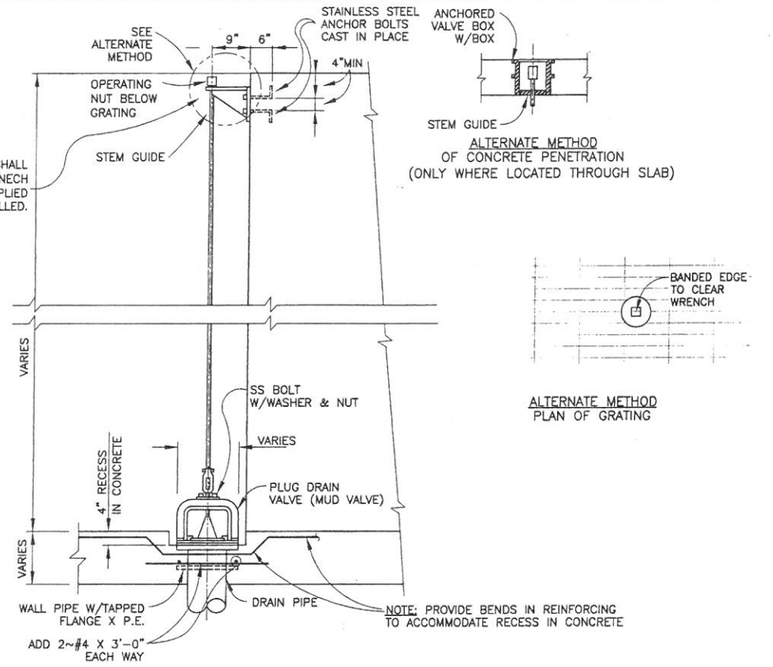

TYPICAL MUD VALVE DETAIL 242
SCALE: NONE

ALTERNATE METHOD
OF CONCRETE PENETRATION
(ONLY WHERE LOCATED THROUGH SLAB)

ALTERNATE METHOD
PLAN OF GRATING

NOTES:

1. EXCEPT WHERE SPECIFICALLY SHOWN OTHERWISE, DETAILS ON THIS SHEET APPLY TO THE ENTIRE SET OF DRAWINGS, WHETHER SPECIFICALLY REFERENCED OR NOT.

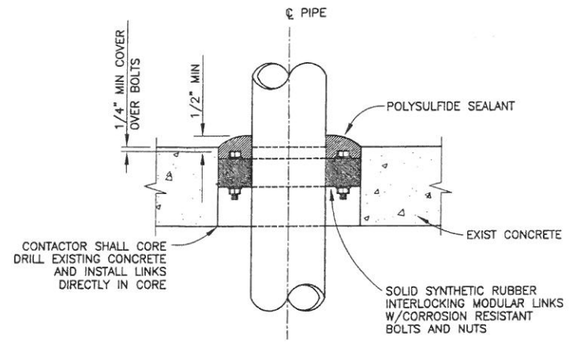

SLEEVE DETAIL 243
SCALE: NONE

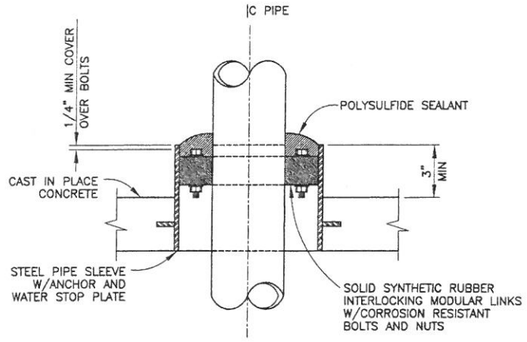

SLEEVE DETAIL 244
SCALE: NONE

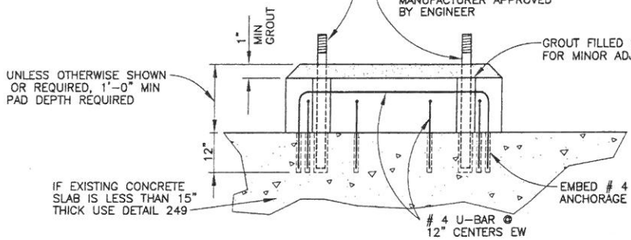

TYPICAL EQUIPMENT BASE DETAIL 248
SCALE: NONE

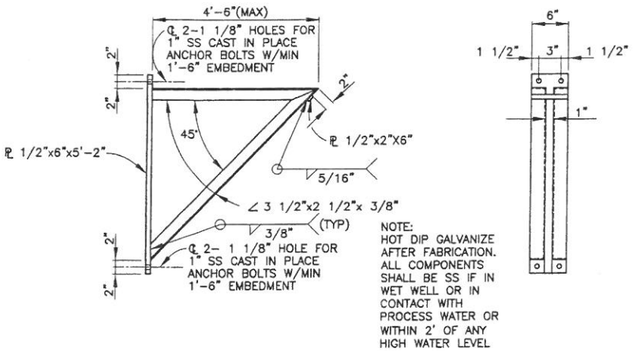

NOTE:
HOT DIP GALVANIZE AFTER FABRICATION. ALL COMPONENTS SHALL BE SS IF IN WET WELL OR IN CONTACT WITH PROCESS WATER OR WITHIN 2' OF ANY HIGH WATER LEVEL

WALL BRACKET DETAIL 245
SCALE: NONE

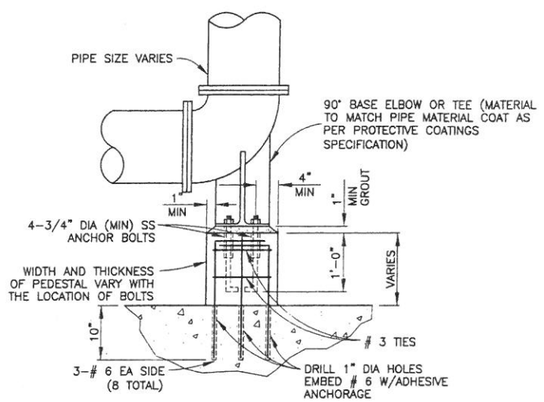

PIPE SUPPORT DETAIL 247
SCALE: NONE

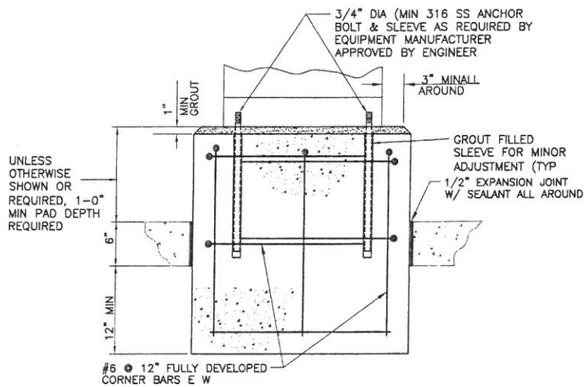

EQUIPMENT PAD DETAIL 249
SCALE: NONE

No.	Date	Revisions	App.

STATE OF TEXAS
LI CHUNG CHEN
98576
REGISTERED PROFESSIONAL ENGINEER
9-21-2011

Binkley & Barfield, Inc
consulting engineers
Texas Registration Number F-257
1710 Seamist Drive
Houston, Texas 77008-3189
(713) 869-3433

SURVEYED BY: AMANI ENG. | FIELD BOOK NO. : P-5486

CITY OF HOUSTON
DEPARTMENT OF PUBLIC WORKS AND ENGINEERING

ALMEDA SIMS WWTP & SPF IMPROVEMENTS PACKAGE II

MISCELLANEOUS STANDARD DETAILS

FILE NO:	–
WBS: R-000298-0005-4	
DRAWING SCALE	
NO SCALE	
CITY OF HOUSTON PM	
IRAJ RANJBAR, P.E.	
DWG NO. :	D-112
SHEET NO.	141 OF 147

ACCEPTED & FILED
49061
CITY DRAWING NUMBER
HOUSTON, TEXAS

BASE DRAWING FILE NAME: DWGFILENAME
DATE LAST MODIFIED: DATE
PC3 file used: PC3
COLOR TABLE:

ORIGINAL SCALE IN INCHES
FOR REDUCED PLANS
0 1 2

C:\115805 ALMEDA SIMS WWTP Package II\Cadd Dwgs_D-112 Miscellaneous Standard Details.dwg Sep 22,2011 - 10:17am RPD

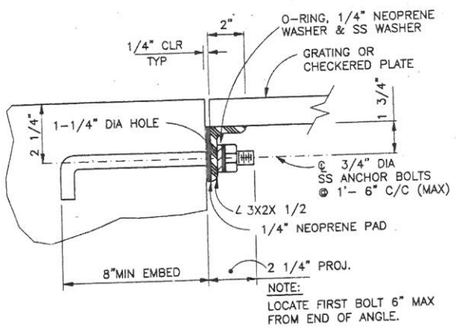

LEDGER ANGLE DETAIL 250

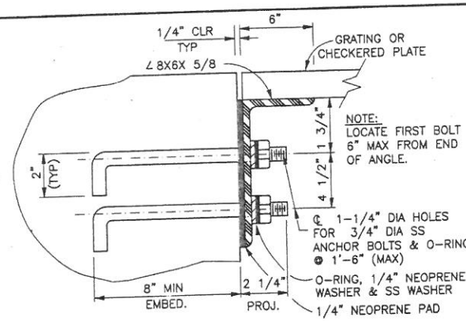

LEDGER HEAVY ANGLE DETAIL 251

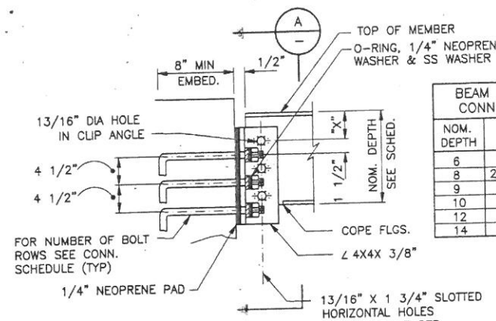

OFFSET BEAM TO CONCRETE CONNECTION 252

BEAM TO CONCRETE CONN. SCHEDULE

NOM. DEPTH	"X"	NUMBER OF BOLT ROWS
6	2"	2
8	2 1/2"	2
9	3"	2
10	3"	2
12	3"	3
14	3"	3

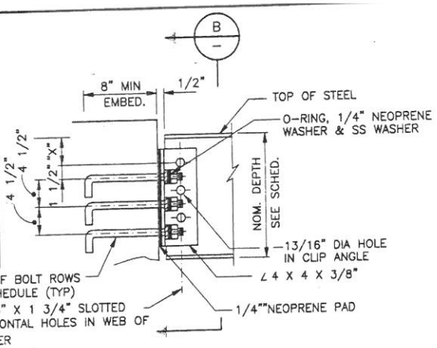

BEAM TO CONCRETE CONNECTION 253

NOTES:

1. EXCEPT WHERE SPECIFICALLY SHOWN OTHERWISE. DETAILS ON THIS SHEET APPLY TO THE ENTIRE SET OF DRAWINGS, WHETHER SPECIFICALLY REFERENCED OR NOT.
2. USE 3/4" DIA SS ANCHORS EPOXY/VINYL ESTER SET FOR EXISTING CONCRETE.

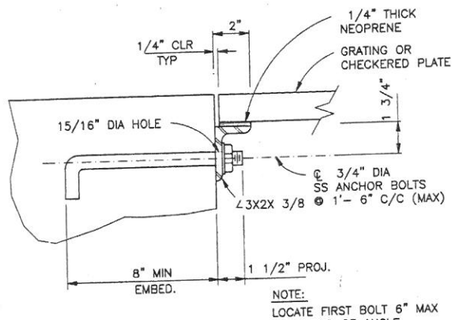

LEDGER ANGLE W/NEOPRENE DETAIL 254

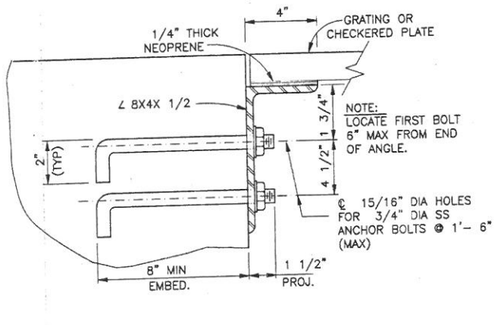

HEAVY LEDGER ANGLE W/NEOPRENE DETAIL 255

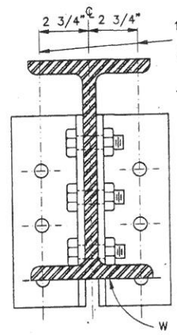

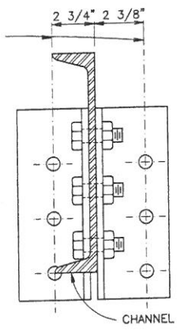

SECTION A

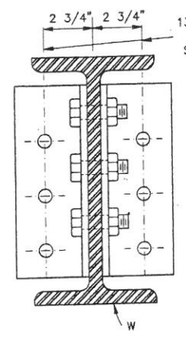

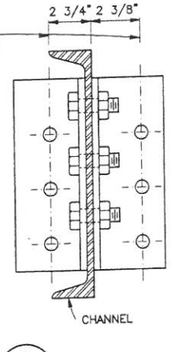

SECTION B

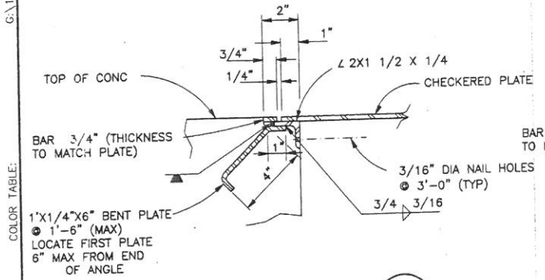

CURB ANGLE DETAIL 256

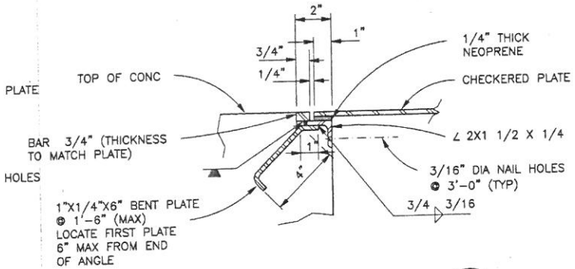

CURB ANGLE W/NEOPRENE DETAIL 257

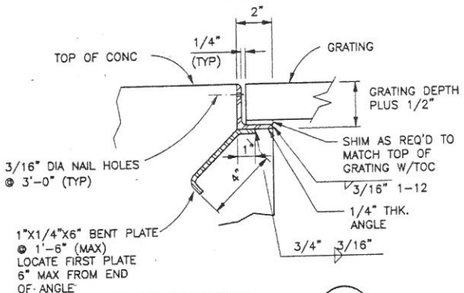

CURB ANGLE DETAIL 258

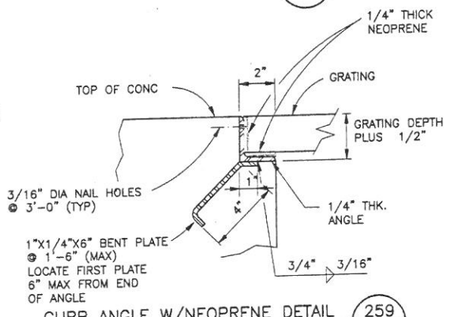

CURB ANGLE W/NEOPRENE DETAIL 259

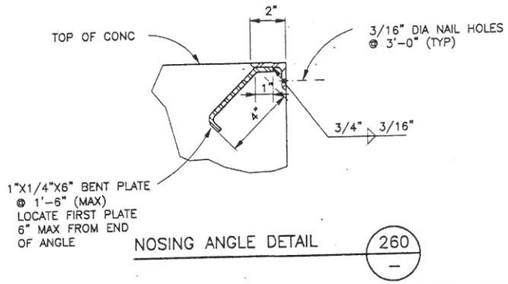

NOSING ANGLE DETAIL 260

No.	Date	Revisions	App.

STATE OF TEXAS
BOBBY T. WHITE
21999
REGISTERED
PROFESSIONAL ENGINEER
6/21/11

Binkley & Barfield, Inc
consulting engineers
Texas Registration Number F-257
1710 Seamist Drive
Houston, Texas 77008-3189
(713) 869-3433

SURVEYED BY: AMANI ENG. FIELD BOOK NO. : P-5486

CITY OF HOUSTON
DEPARTMENT OF PUBLIC WORKS AND ENGINEERING

ALMEDA SIMS WWTP & SPF IMPROVEMENTS PACKAGE II

STANDARD STRUCTURAL DETAILS

FILE NO:	–
WBS: R-000298-0005-4	
DRAWING SCALE	NO SCALE
CITY OF HOUSTON PM	IRAJ RANJBAR, P.E.
DWG NO. :	D-113
SHEET NO.	142 OF 147

PUBLIC WORKS AND ENGINEERING
ACCEPTED & FILED
49061
CITY DRAWING NUMBER
HOUSTON, TEXAS

G:\115805 ALMEDA SIMS WWTP Package II\Cadd Dwgs_D-113 Standard Structural Details.dwg Sep 21,2011 - 12:47pm RPD

COLOR TABLE:

ORIGINAL SCALE IN INCHES
FOR REDUCED PLANS
0 1 2 3

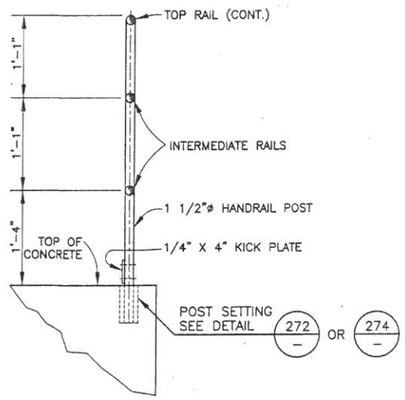

TYPICAL HANDRAIL POST W/O CURB DETAIL 270 –

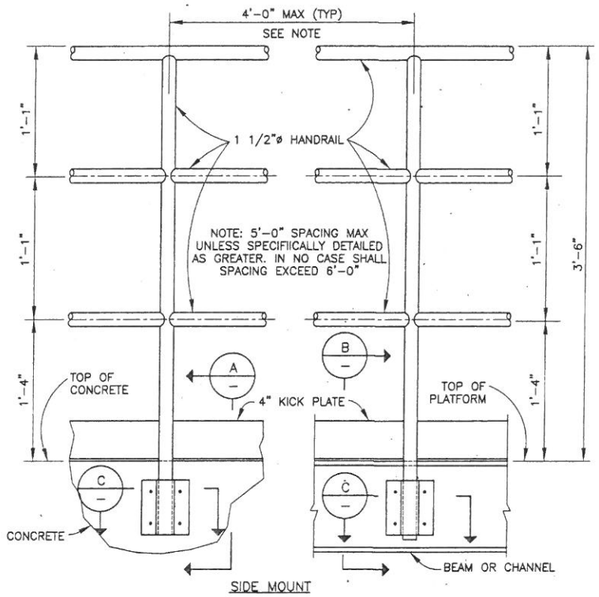

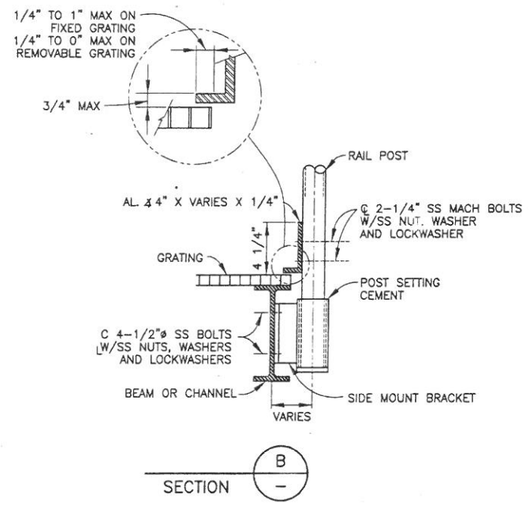

SECTION B –

NOTES:

1. EXCEPT WHERE SPECIFICALLY SHOWN OTHERWISE, DETAILS ON THIS SHEET APPLY TO THE ENTIRE SET OF DRAWINGS, WHETHER SPECIFICALLY REFERENCED OR NOT.
2. COMPONENT OF HANDRAIL MAY BE ALUMINUM OR 316 SS, UNLESS MATERIAL IS SPECIFICALLY IDENTIFIED.

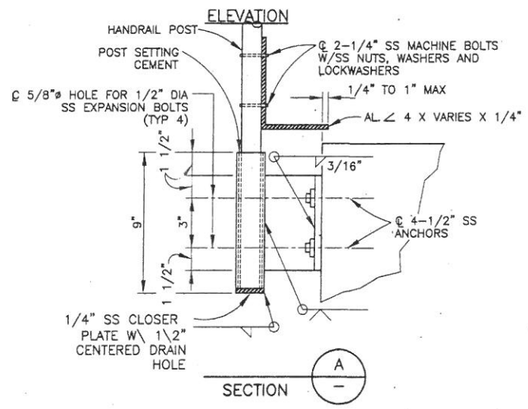

SECTION A –

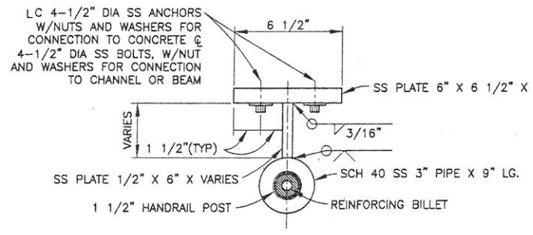

HANDRAIL SIDE MOUNT DETAIL C –

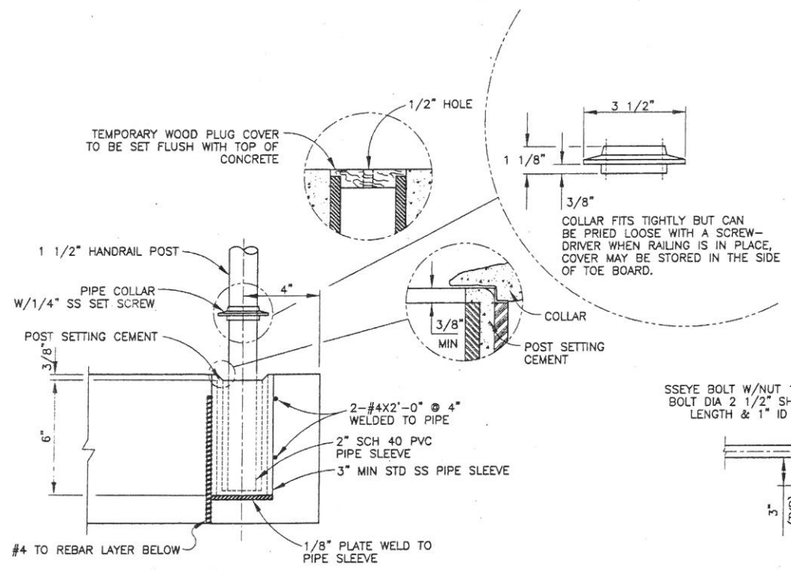

REMOVABLE HANDRAIL POST SETTING DETAIL 272 –

TYPICAL SIDE MOUNT HANDRAIL DETAIL 271 –

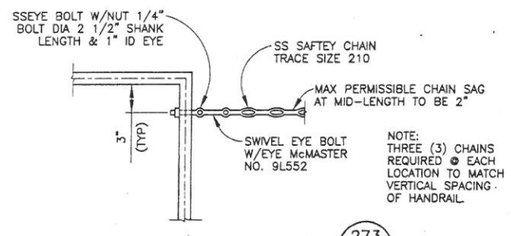

TYPICAL SAFETY CHAIN DETAIL 273 –

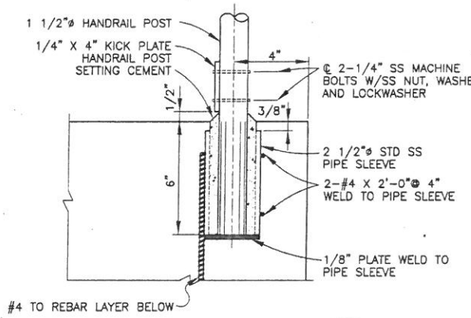

POST SETTING DETAIL 274 –

No.	Date	Revisions	App.

STATE OF TEXAS
BOBBY T. WHITE
21999
REG/LICENSED
PROFESSIONAL ENGINEER
12-21-11

Binkley & Barfield, Inc
consulting engineers
Texas Registration Number F-257
1710 Seamist Drive
Houston, Texas 77008-3189
(713) 869-3433

SURVEYED BY: AMANI ENG. | FIELD BOOK NO. : P-5486

CITY OF HOUSTON
DEPARTMENT OF PUBLIC WORKS AND ENGINEERING

ALMEDA SIMS WWTP & SPF IMPROVEMENTS PACKAGE II

STANDARD STRUCTURAL DETAILS HANDRAILS

FILE NO:	–
WBS: R-000298-0005-4	
DRAWING SCALE	
NO SCALE	
CITY OF HOUSTON PM	
IRAJ RANJBAR, P.E.	
DWG NO. :	D-114
SHEET NO.	143 OF 147

PUBLIC WORKS AND ENGINEERING
ACCEPTED & FILED
49061
CITY DRAWING NUMBER
HOUSTON, TEXAS

C:\115805 Almeda-Sims\Package II\Cadd Dwgs\D-114 Standard Structural Details Handrails.dwg Sep 21,2011 – 12:49pm RPD

COLOR TABLE:

ORIGINAL SCALE IN INCHES FOR REDUCED PLANS
0 1 2 3

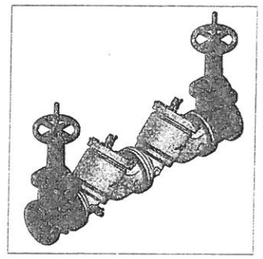

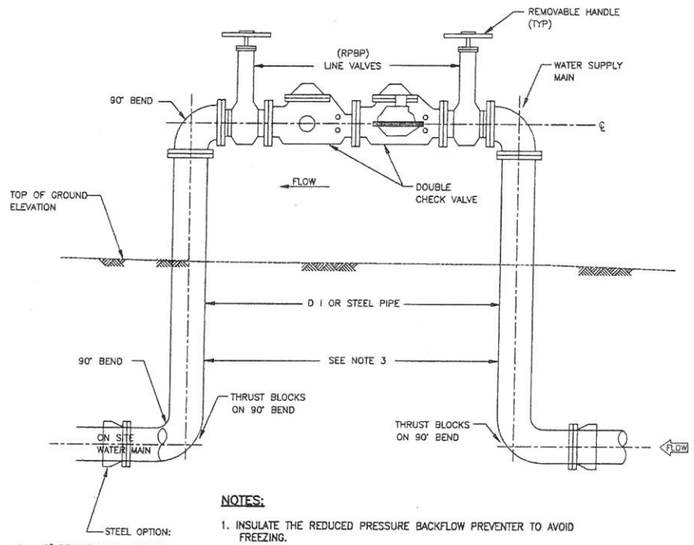

NOTES:

1. INSULATE THE REDUCED PRESSURE BACKFLOW PREVENTER TO AVOID FREEZING.
2. THE REDUCED PRESSURE BACKFLOW PREVENTER'S DISCHARGE OPENING IS TO BE A MINIMUM OF 12 INCHES ABOVE THE GROUND ELEVATION OR 100 YEAR FLOOD ELEVATION WHICHEVER IS GREATER.
3. PROVIDE RESTRAINED JOINT PIPE AS SHOWN ON PLAN & PROFILE SHEETS.

REDUCED PRESSURE BACKFLOW – PREVENTER (R P B P)

2

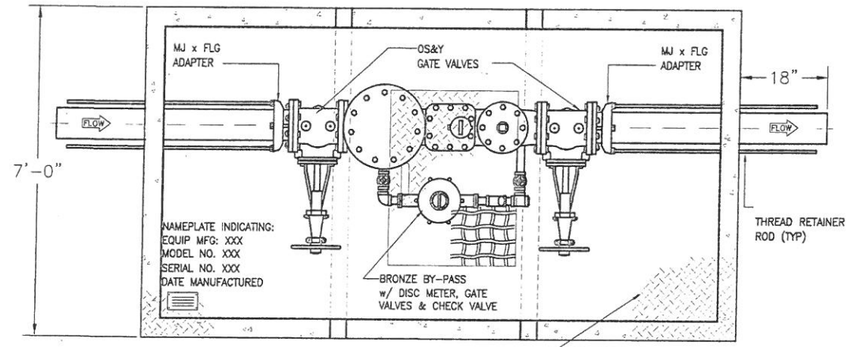

PLAN VIEW

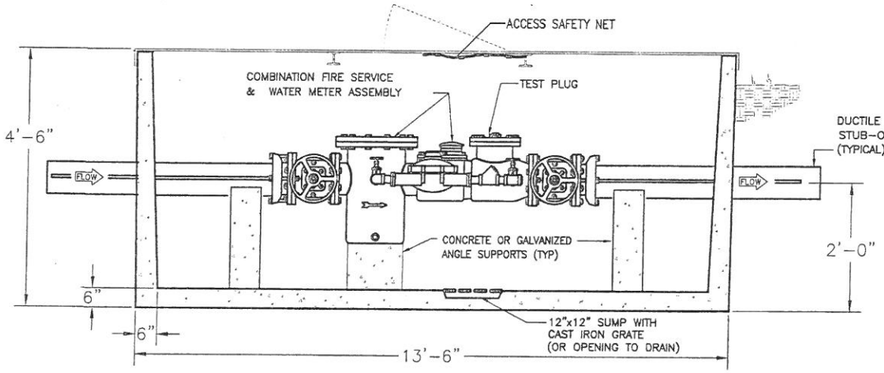

ELEVATION

COMBINATION 8" FIRE AND 4" DOMESTIC METER ASSEMBLY WITH IN–GROUND VAULT

1

MODEL	SIZE	BY PASS	L1	W1	H1	WEIGHT LBS
FMTCOH3	3"	2"	11'–6"	6'–0"	4'–3"	14,500
FMTCOH4	4"	2"	11'–6"	6'–0"	4'–3"	15,000
FMTCOH6	6"	4"	13'–6"	6'–0"	4'–3"	19,500
FMTCOH8	8"	4"	13'–6"	7'–0"	4'–3"	20,000
FMTCOH10	10"	4"	16'–0"	7'–0"	4'–3"	25,000

90° BEND	
PIPE SIZE	BEARING AREA
4"	3 S.F.
6"	6 S.F.
8"	10 S.F.
10"	16 S.F.
12"	22 S.F.
14"	30 S.F.
18"	49 S.F.
24"	87 S.F.

NOTES:

1. FOR USE ON EXISTING PIPES AND PROPOSED LINES SMALLER THAN 12" ONLY.
2. ALL THRUST BLOCKS TO BE CLASS B CONCRETE ALL CONCRETE TO BE POURED AGAINST FIRM UNDISTURBED SOIL.
3. FOR PIPE SMALLER THAN 4" DIA., USE 1 (ONE) S.F. BEARING AREA FOR ALL BENDS, TEES AND PLUGS.

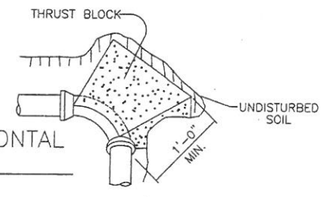

CONCRETE HORIZONTAL THRUST BLOCK

3

N.T.S.

NOTES:

1. CONTRACTOR SHALL FIELD VERIFY SITE CONDITIONS, AND PERFORM FIELD PROBING AND POTHOLE TEST TO VERIFY EXISTING UNDERGROUND CONDITIONS.
2. REMOVAL OF THE EXIST WATER METER AND REDUCED PRESSURE BACKFLOW PREVENTER (RPBP), AND INSTALLATION OF NEW METER AND RPBP MUST BE PERFORMED BY A CITY OF HOUSTON AUTHORIZED PLUMBER. CONTACT CITY OF HOUSTON UTILITY DEPT. TO OBTAIN THE CURRENT LIST OF AUTHORIZED PLUMBERS.
3. OLD METER SHALL BE RETURNED TO THE CITY OF HOUSTON ASSIGNED LOCATION. NEW METER INSTALLATION SHALL BE APPROVED BY THE CITY OF HOUSTON METER INSPECTOR.
4. WATER METER SHALL BE TESTED AND APPROVED BY THE CITY OF HOUSTON METER INSPECTOR.
5. REFER TO SPEC 02526 FOR DETAILS OF WATER METER REQUIREMENTS.

No.	Date	Revisions	Apr.

STATE OF TEXAS
LI CHUNG CHEN
98576
REGISTERED PROFESSIONAL ENGINEER
9-21-2011

Binkley & Barfield, Inc
consulting engineers
Texas Registration Number F-257
1710 Seamist Drive
Houston, Texas 77008-3189
(713) 869-3433

SURVEYED BY: AMANI ENG. | FIELD BOOK NO. : P–5486

CITY OF HOUSTON
DEPARTMENT OF PUBLIC WORKS AND ENGINEERING

ALMEDA SIMS WWTP & SPF IMPROVEMENTS PACKAGE II
FIRE SERVICE WATER METER AND WATER LINE STANDARD DETAILS

FILE NO:	–
WBS:	R–000298–0005–4
DRAWING SCALE	NO SCALE
CITY OF HOUSTON PM	IRAJ RANJBAR, P.E.
DWG NO. :	D–115
SHEET NO.	144 OF 147

PUBLIC WORKS AND ENGINEERING ACCEPTED & FILED
49061
CITY DRAWING NUMBER
HOUSTON, TEXAS

G:\115805 Almeda Sims Package II\Cadd Dwgs\D–115 Fire Service Meter and Standard Water Line Details.dwg Sep 22,2011 – 10:21am RPD

COLOR TABLE:

ORIGINAL SCALE IN INCHES FOR REDUCED PLANS
0 1 2 3

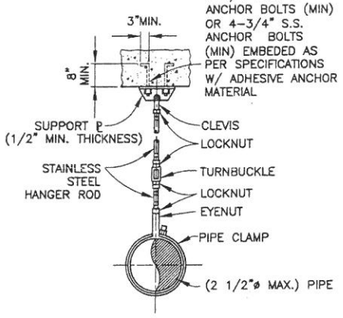

PIPE HANGER DETAILS 220 –

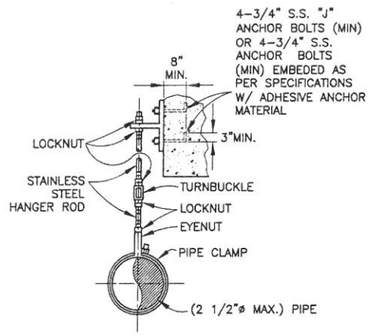

PIPE HANGER DETAILS 221 –

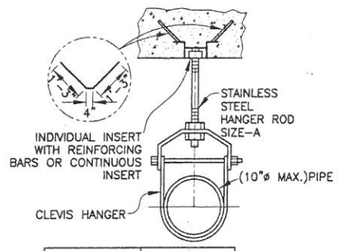

PIPE SIZE	A HANGER ROD
2"& SMALLER	3/8"
2 1/2"	1/2"
3" THRU 4"	5/8"
6" THRU 10"	3/4"
12"	7/8"

PIPE HANGER DETAILS 222 –

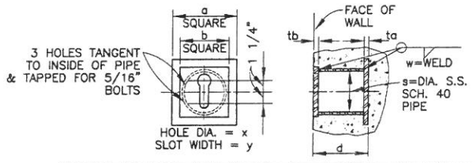

BOLT SIZE	DIMENSIONS IN INCHES								
	a	ta	b	tb	d	s	w	x	y
3/4	7	1/2	5 1/2	3/8	5 1/2	4	1/4	1 7/16	7/8
7/8	9	5/8	7	3/4	7 1/2	5	3/8	1 13/16	1
1	9	5/8	7	3/4	7 1/2	5	3/8	1 13/16	1 1/8
1 1/8	11	7/8	8	3/4	9	6	3/8	2 1/4	1 1/4
1 1/4	11	7/8	8	3/4	9	6	3/8	2 1/4	1 3/8

PIPE HANGER DETAILS 223 –

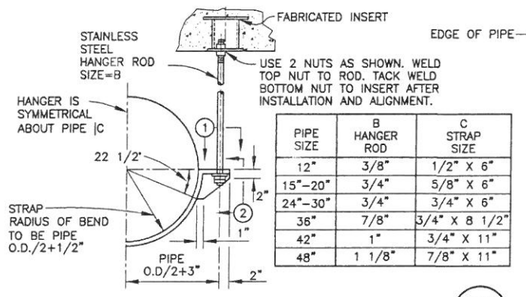

PIPE SIZE	B HANGER ROD	C STRAP SIZE
12"	3/8"	1/2" X 6"
15"–20"	3/4"	5/8" X 6"
24"–30"	3/4"	3/4" X 6"
36"	7/8"	3/4" X 8 1/2"
42"	1"	3/4" X 11"
48"	1 1/8"	7/8" X 11"

PIPE HANGER DETAILS 224 –

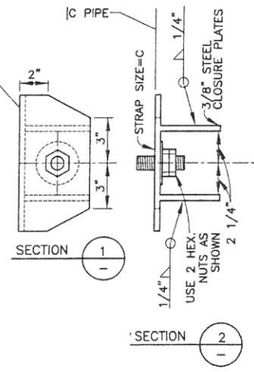

NOTES:

1. EXCEPT WHERE SPECIFICALLY SHOWN OTHERWISE, DETAILS ON THIS SHEET APPLY TO THE ENTIRE SET OF DRAWINGS, WHETHER SPECIFICALLY REFERENCED OR NOT.
2. SUPPORT SPACING SHALL BE AS PER SPECIFICATIONS.

No.	Date	Revisions	App.

STATE OF TEXAS
LI CHUNG CHEN
98576
REGISTERED PROFESSIONAL ENGINEER
9-21-2011

Binkley & Barfield, Inc
consulting engineers
Texas Registration Number F-257
1710 Seamist Drive
Houston, Texas 77008-3189
(713) 869-3433

SURVEYED BY: AMANI ENG. | FIELD BOOK NO. : P–5486

CITY OF HOUSTON
DEPARTMENT OF PUBLIC WORKS AND ENGINEERING

ALMEDA SIMS WWTP & SPF IMPROVEMENTS PACKAGE II

STANDARD PIPE HANGER DETAILS

FILE NO:	–
WBS: R–000298–0005–4	
DRAWING SCALE	
NO SCALE	
CITY OF HOUSTON PM	
IRAJ RANJBAR, P.E.	
DWG NO. :	D–116
SHEET NO. 145 OF 147	

PUBLIC WORKS AND ENGINEERING ACCEPTED & FILED 49061 CITY DRAWING NUMBER HOUSTON, TEXAS

G:\115805 Almeda Sims Package II\Cadd Dwgs_D-116 Standard Pipe Hanger Details.dwg Sep 22,2011 - 10:43am RPD

COLOR TABLE:

ORIGINAL SCALE IN INCHES FOR REDUCED PLANS
0 1 2 3

V:\Cadd\2009\09017 B&B-AlmedaSimsPlant\TCP\TCP Rev 1.dwg Sep 21,2011 - 9:31am calpough

TYPICAL POSTED SPEED ON ALMEDA RD. (FM 521) - 45MPH
DATE TIME WORK ONLY.

CONTRACTOR HAS TO SUBMIT THIS TCP TO TxDOT AND OBTAIN APPROVAL

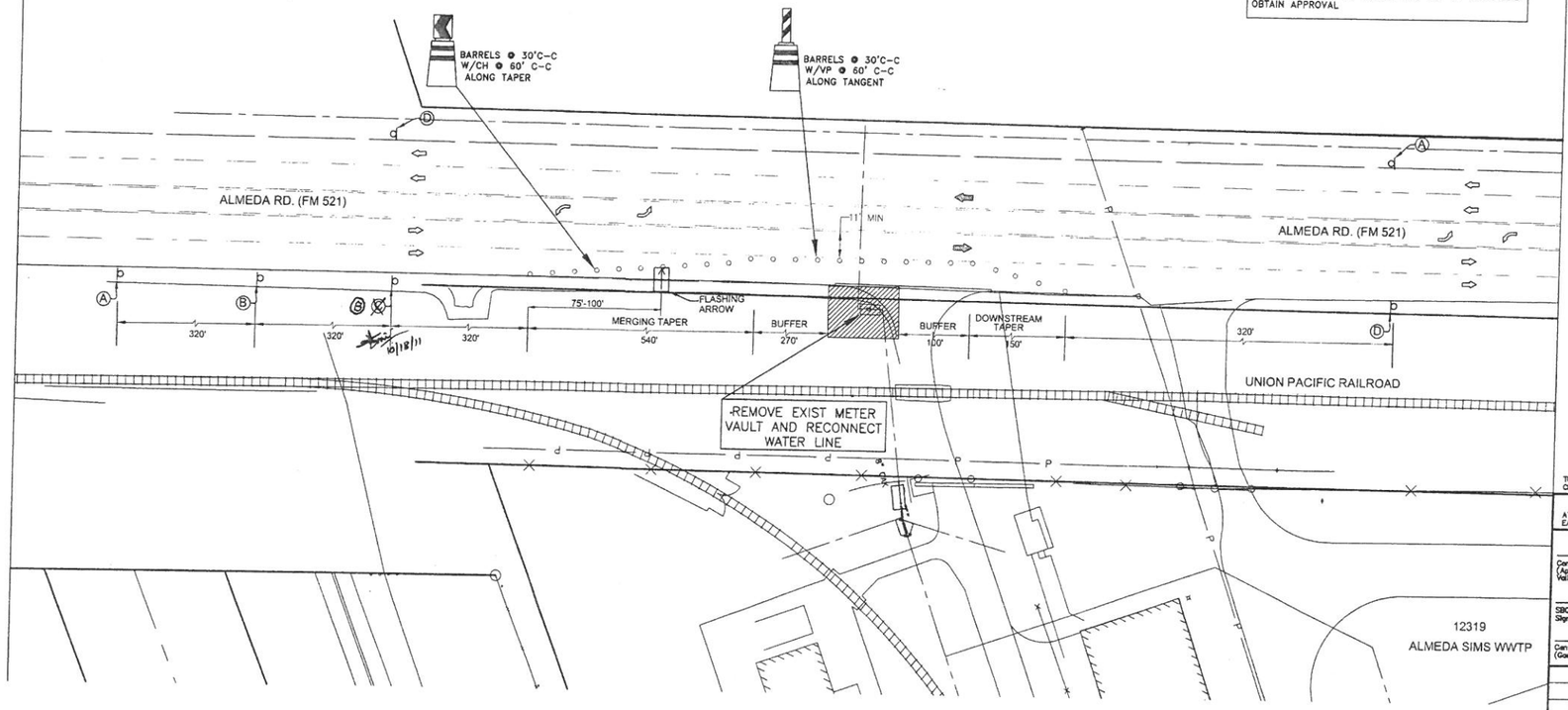

TYPICAL TRAFFIC CONTROL PLAN ALONG ALMEDA RD.

CITY OF HOUSTON
Department of Public Works and Engineering
Traffic and Transportation Division
Traffic Notes

1. CONTRACTOR SHALL PROVIDE AND INSTALL TRAFFIC CONTROL DEVICES IN CONFORMANCE WITH PART VI OF THE TEXAS MANUAL ON UNIFORM TRAFFIC CONTROL DEVICES (T.M.U.T.C.D., MOST RECENT EDITION WITH REVISIONS) DURING CONSTRUCTION.
2. NO WORK AND LANES SHALL BE CLOSED IN RESIDENTIAL AREA FROM 7:00 PM TO 7:00 AM.
   NO LANES CLOSED 7-9 AM. AND 4-6 PM., MONDAY THROUGH FRIDAY
3. CONTRACTOR SHALL MAINTAIN ONE LANE OF TRAFFIC IN EACH DIRECTION DURING WORKING HOURS.

3a. CONTRACTOR SHALL MAINTAIN LANE(S) ACCORDING TO TRAFFIC CONTROL PLAN(S) DURING WORKING HOURS.

4. CONTRACTOR SHALL COVER OPEN EXCAVATIONS WITH STEEL PLATES ANCHORED PROPERLY DURING NON-WORKING HOURS AND OPEN LANE FOR NORMAL TRAFFIC FLOW.
5. OFF DUTY UNIFORMED POLICE OFFICER(S)/FLAGGER(S) IS/ARE REQUIRED TO DIRECT TRAFFIC WHEN LANES ARE BLOCKED.

6a. IN THE EVENT WHEN NO 'TRAFFIC CONTROL PLANS' EXIST AS A PART OF CONTRACT DRAWINGS, CONTRACTOR SHALL PREPARE PLANS* AND SUBMIT TO PLAN REVIEW SECTION FOR APPROVAL TEN WORKING DAYS PRIOR TO IMPLEMENTATION.

6b. IF THE CONTRACTOR CHOOSES TO USE A DIFFERENT METHOD OF "TRAFFIC CONTROL PLANS" DURING THE CONSTRUCTION THAN WHAT IS OUTLINED IN THE CONTRACT DRAWINGS, (S)HE SHALL BE RESPONSIBLE TO PREPARE AND SUBMIT AN ALTERNATE SET OF PLANS* TO PLAN REVIEW SECTION FOR APPROVAL TEN WORKING DAYS PRIOR TO IMPLEMENTATION.

*THESE PLANS SHALL BE DRAWN TO ACCEPTABLE SCALE ON REPRODUCIBLE MYLARS AND SEALED BY A REGISTERED PROFESSIONAL ENGINEER IN THE STATE OF TEXAS. PLANS SHALL BECOME A PART OF THE CONTRACT DRAWINGS.

7. APPROVED COPIES OF 'TRAFFIC CONTROL PLANS AND LANE/SIDEWALK CLOSURE PERMITS SHALL BE AVAILABLE FOR INSPECTION AT JOB SITE AT ALL TIMES.

*CONTRACTOR MUST SECURE 'LANE/SIDEWALK CLOSURE PERMITS' FROM CITY'S TRAFFIC MANAGEMENT AND MAINTENANCE BRANCH BEFORE CLOSING A LANE OR SIDEWALK. THE REQUEST MUST BE MADE AT LEAST TEN BUSINESS DAYS PRIOR TOT THE DATE FOR WHICH THE CLOSURE IS SOUGHT. NOTE THAT WORKING HOURS MAY BE RESTRICTED OR THE REQUEST MAY BE DENIED. CALL 713-837-7280 FOR AN APPLICATION.

SPACING FOR CHANNELING DEVICES

A. PLASTIC DRUMS ON MERGING TAPER @ 30' C-C WITH CHEVRON SIGN @ 60' C-C AND TYPE "C" WARNING LIGHT (FOR OVERNIGHT CLOSURE)
B. PLASTIC DRUMS ON DOWNSTREAM TAPER @35' C-C
C. PLASTIC DRUMS ON RADII @5'C-C
D. PLASTIC DRUMS ON TANGENT @35'C-C WITH VERTICAL PANEL @70'C-C AND TYPE "C" WARNING LIGHT @70'C-C (FOR OVERNIGHT CLOSURE)
E. PLASTIC DRUMS IN FRONT OF CONSTRUCTION ZONE @20' C-C WITH VERTICAL PANEL @40' C-C AND TYPE "A" WARNING LIGHT @ 40' C-C (FOR OVERNIGHT CLOSURE)
F. CONCRETE TRAFFIC BARRIER (C.T.B.) OR LOW PROFILE CONCRETE TRAFFIC BARRIER (L.P.C.T.B) WITH REFLECTORS @11' C-C IF PAVEMENT DROP IS MORE THAN TWELVE INCHES (12") OR PLASTIC DRUMS W/GUARD RAIL MOUNTED.

NOTE:- SPACINGS SHOWN ON TRAFFIC CONTROL PLANS SHALL BE SUPERSEDED BY THE ABOVE SPACINGS. SPACINGS MAY BE ADJUSTED TO PROVIDE DRIVEWAYS, INTERSECTIONS AND/OR MEDIAN OPENINGS.

LEGEND

- EXISTING TRAFFIC PATTERN
- PROPOSED TRAFFIC PATTERN
- PLASTIC DRUMS

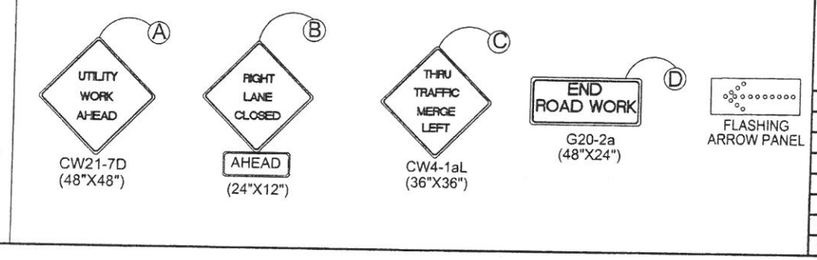

TO ARRANGE FOR LINES TO BE TURNED OFF OR MOVED, CALL CENTERPOINT AT 713-207-7777.

PRIVATE UTILITY LINES SHOWN
AT LEAST 48 HOURS BEFORE EXCAVATING IN STREET R.O.W. OR EASEMENTS CALL THE LONE STAR NOTIFICATION 713-223-4567.

Date:
CenterPoint Energy/Electric Facilities
(Approval only for crossing underground ductlines, unless otherwise noted.)
Valid at time of review only.

Date:
SBC Approved for underground conduit facilities only.
Signature valid for one year.

Date:
CenterPoint Energy/Gas Facilities
(Gas service lines are not shown)

No.	Date	Revisions	App.

STATE OF TEXAS
SRINIVAS A. VELLORE
99425
REGISTERED PROFESSIONAL ENGINEER
01/26/14

AMANI ENGINEERING, INC.
8313 SOUTHWEST FREEWAY
SUITE 350
HOUSTON, TEXAS 77074
TEL: (713) 270-5700
TBPE REG. NO.: F-4528

Binkley & Barfield, Inc
consulting engineers
Texas Registration Number F-257
1710 Seamist Drive
Houston, Texas 77008-3189
(713) 869-3433

SURVEYED BY: AMANI ENG. | FIELD BOOK NO. : P-5486

CITY OF HOUSTON
DEPARTMENT OF PUBLIC WORKS AND ENGINEERING

ALMEDA SIMS WWTP & SPF IMPROVEMENTS PACKAGE II

TRAFFIC CONTROL PLAN FOR WATER METER WORKS

FILE NO:	-
WBS: R-000298-0005-4	
DRAWING SCALE	1:40
CITY OF HOUSTON PM	IRAJ RANJBAR, P.E.
DWG NO. :	T-100
SHEET NO.	146 OF 147

PUBLIC WORKS AND ENGINEERING
ACCEPTED & FILED
490614
CITY DRAWING NUMBER
HOUSTON, TEXAS

COLOR TABLE:

ORIGINAL SCALE IN INCHES FOR REDUCED PLANS
0 1 2 3

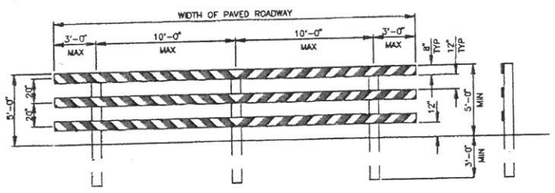

TYPE III BARRICADE
FOR END OF ROAD

FOR TYPE III BARRICADE FOR END OF ROAD, THE THREE (3) RAILS SHALL BE REFLECTIVE RED AND RELFLECTIVE WHITE STRIPES ON SIDE FACING TRAFFIC

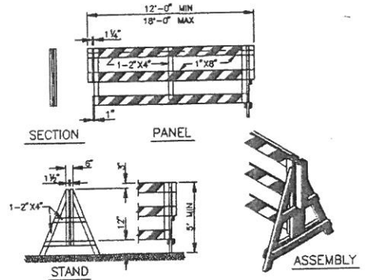

DEMOUNTABLE TYPE III BARRICADE

BARRICADE NOTES

THE MOST RECENT EDITION OF THE TEXAS MANUAL ON UNIFORM TRAFFIC CONTROL DEVICES, AND IT'S REVISIONS, SHALL GOVERN THE CONSTRUCTION AND USE OF ALL ITEMS HEREIN DESCRIBED.

CHANNELIZATION DEVICES OTHER THAN BARRICADES SHOULD NORMALLY BE USED FOR CHANNELIZATION PURPOSES.

BARRICADES SHOULD NORMALLY BE PLACED PERPENDICULAR TO THE TRAFFIC FLOW. OTHER CHANNELIZING DEVICES, SUCH AS DRUMS, VERTICAL PANELS OR PORTABLE BARRIERS, SHOULD BE USED WHERE NEEDED TO SEPARATE TRAFFIC FROM THE WORK AREA. IN ALL CASES, THE BARRICADES SHOULD BE SO LOCATED AS TO MOST ADVANTAGEOUSLY WARN AND DIRECT TRAFFIC.

BARRICADES MAY BE DESIGNED AND CONSTRUCTED FROM WOOD OR ANY OTHER SUITABLE MATERIAL IN A MANNER APPROVED BY THE DEPARTMENT OF TRAFFIC AND TRANSPORTATION. THE CONSTRUCTION DETAILS SHOWN HEREON ARE TYPICAL AND ARE SUGGESTED DETAILS FOR WOOD SUPPORT SYSTEMS FOR BARRICADES. THE DETAILS OF RAIL WIDTH AND STRIPING, NUMBER AND SPACING OF RAILS, MINIMUM LENGTH AND HEIGHT (ABOVE PAVEMENT) OF RAILS MUST BE ADHERED TO WHEN ALTERNATE DESIGNS ARE USED.

BARRICADES ARE TO BE CONSTRUCTED OF CLEAN SOUND MATERIAL. ALL SURFACES ABOVE GROUND, WHICH ARE NOT STRIPED, SHALL BE WHITE EXCEPT THE UNPAINTED GALVANIZED METAL OR ALUMINUM COMPONENTS MAY BE USED. COMPONENTS MADE OF LUMBER SHALL BE PAINTED WITH A MINIMUM OF TWO COATS OF AN APPROVED BRAND OF WHITE PAINT TO SECURE THOROUGH COVERAGE AND A UNIFORM WHITE COLOR.

THE REFLECTORIZED WHITE AND REFLECTORIZED ORANGE (REFLECTORIZED RED) STRIPES FOR BARRICADES, DRUMS AND VERTICAL PANELS SHALL BE CONSTRUCTED OF "HIGH INTESITY SHEETING AND SHALL BE MAINTAINED TO MEET THE APPEARANCE, COLOR AND REFLECTIVITY REQUIREMENTS SET BY DOTT.

THE CONTRACTOR SHALL MAINTAIN EACH BARRICADE IN A CLEAN AND GOOD CONDITION.

BARRICADES SHALL BE REMOVED UPON COMPLETION OF THE WORK AND/OR THE ELIMINATION OF THE HAZARD ON ANY SECTION.

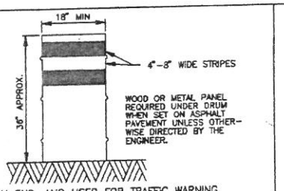

DRUMS

DRUMS, SET ON END, AND USED FOR TRAFFIC WARNING OR CHANNELIZATION SHALL BE APPROX 36" IN HEIGHT AND A MIN OF 18" IN DIAMETER. THE CONTRACTOR, AT HIS OPTION, MAY USE DRUMS MADE FROM STEEL BARRELS OR BLACK POLYETHYLENE PLASTIC DRUM LINERS WEIGHING APPROX EIGHT POUNDS EACH. THE MARKINGS ON DRUMS SHALL BE HORIZONTAL, CIRCUMFERENTIAL, REFLECTORIZED ORANGE AND REFLECTORIZED WHITE STRIPES, 4 TO 8 INCHES WIDE. THE FIRST REFLECTORIZED STRIPE SHOULD START WITHIN TWO (2) INCHES OF THE TOP OF THE DRUM. THERE SHALL BE AT LEAST TWO ORANGE AND TWO WHITE STRIPES ON EACH DRUM. IF THERE ARE NON-REFLECTORIZED SPACES BETWEEN THE HORIZONTAL ORANGE AND WHITE STRIPES, THEY SHALL BE NO MORE THAN 2 INCHES WIDE. METAL DRUMS SHALL BE PAINTED BLACK OR ORANGE BEFORE REFLECTORIZED STRIPES ARE ADDED. ALL DRUMS ON PROJECT WILL BE THE SAME COLOR. WHEN DRUMS ARE PLACED IN THE ROADWAY, APPROPIATE WARNING SIGNS SHOULD BE USED. DURING HOURS OF DARKNESS, A FLASHING WARNING LIGHT SHOULD BE PLACED ON DRUMS USED SINGLY AS A WARNING DEVICE. STEADY BURN ELECTRIC LIGHTS OR DELINEATORS SHOULD BE PLACED ON DRUMS USED IN SERIES FOR TRAFFIC CHANNELIZATION. DRUMS SHALL BE WEIGHTED WITH SAND TO THE EXTENT INDICATED IN THE PLANS.

CWI-8 CHEVRON SIGNS, CWI-6A ARROW SIGNS OR VP-I VERTICAL PANELS MOUNTED ABOVE DRUMS MAY BE USED AS SUPPLEMENTS TO DRUM DELINEATION.

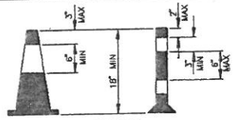

CONES

TRAFFIC CONES AND TUBULAR MARKERS SHALL BE A MIN OF 18" INCHES IN HEIGHT WITH A BROADENED BASE AND MAY BE MADE OF VARIOUS MATERIALS TO WITHSTAND IMPACT WITHOUT DAMAGE TO THEMSELVES OR TO VEHICLES. LARGER SIZES SHOULD BE USED ON FREEWAYS AND OTHER ROADWAYS WHERE SPEED ARE RELATIVELY HIGH OR WHERE EVER MORE CONSPICUOUS GUIDANCE IS NEEDED. ORANGE SHALL BE THE PREDOMINANT COLOR ON CONES AND TUBULAR MARKERS. THEY SHOULD BE KEPT CLEAN AND BRIGHT FOR MAX TARGET VALUE. FOR NIGHTTIME USE THEY SHALL BE REFLECTORIZED OR EQUIPPED WITH LIGHTING DEVICES FOR MAX VISIBILITY. REFLECTORIZED MATERIAL SHALL HAVE A SMOOTH, SEALED OUTER SURFACE WHICH WILL DISPLAY THE SAME APPROX COLOR DAY AND NIGHT.

REFLECTORIZATION OF TUBULAR MARKERS SHALL BE A MIN OF TWO THREE-INCH BANDS PLACED A MAX OF 2" FROM THE TOP WITH A MAX OF 5" BETWEEN THE BANDS. REFLECTORIZATION OF CONES SHALL BE PROVIDED BY A MIN 6" BAND PLACED A MAX OF 3" FROM THE TOP.

CONES OR TUBULAR MARKERS ARE GENERALLY ONLY SUITABLE FOR TEMPORARY USAGE (UP TO 8 HOURS) WITH OTHER CHANNELIZATION DEVICES SUCH AS VERTICAL PANELS OR BARRICADES PREFERRED FOR LONGER TERM USAGE. CARE SHOULD BE TAKEN TO INSURE THAT THEY REMAIN IN THEIR PROPER LOCATION AND IN AN UPRIGHT POSITION.

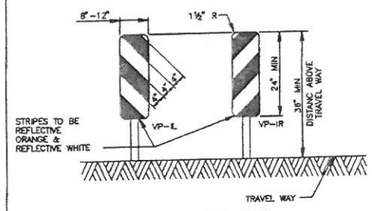

VERTICAL PANELS (VP)

VERTICAL PANELS ARE NORMALLY USED AS CHANNELIZING DEVICES TO INDICATE TANGENT OR NEARLY TANGENT ROADWAY ALIGNMENT WHERE GOOD TARGET VALUE OF A DEVICE IS NEEDED IN DAYTIME AS WELL AS THE NIGHTTIME. IN ADDITION, VERTICAL PANELS SHOULD BE USED AT THE EDGE OF SHOULDER DROP-OFFS AND OTHER SUCH AREAS AS LANE TRANSITIONS WHERE POSITIVE DAY AND NIGHT DELINEATION MAY BE REQUIRED. VERTICAL PANELS SHOULD BE MOUNTED BACK TO BACK IF USED AT THE EDGE OF CUTS ADJACENT TO TWO-WAY TWO LANE ROADWAYS. STRIPES SHOULD ALWAYS SLOPE DOWNWARD TOWARD THE TRAVELED WAY.

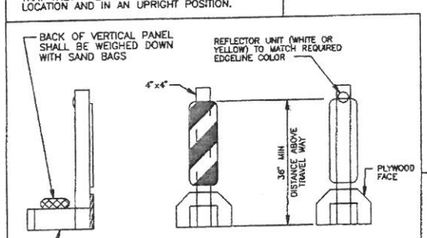

TYPICAL PORTABLE VERTICAL PANEL OR DELINEATOR

OTHER SIMILAR SUPPORTS MAY BE USED WHEN APPROVED OR DIRECTED BY THE COH DEPT OF TRAFFIC AND TRANSPORTATION

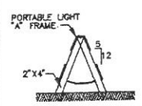

"A" FRAME

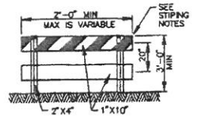

TYPE I

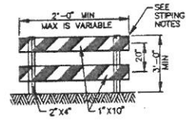

TYPE II

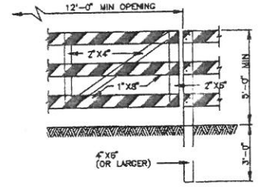

GATE FOR
TYPE III BARRICADE

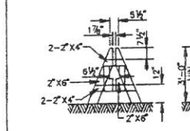

DEMOUNTABLE

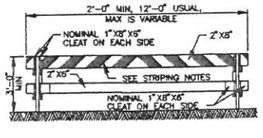

TYPE I

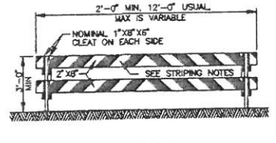

TYPE II

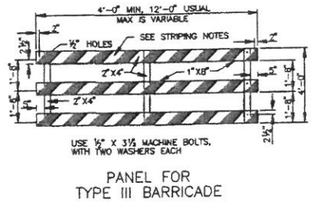

PANEL FOR
TYPE III BARRICADE

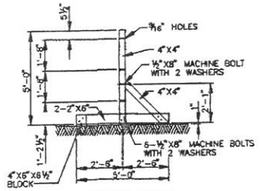

STAND FOR
TYPE III BARRICADE

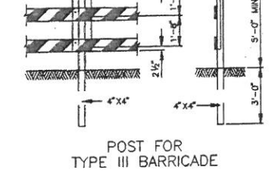

POST FOR
TYPE III BARRICADE

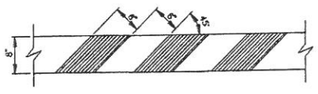

STRIPING FOR BARRICADE

FOR ALL TYPES OF BARRICADES WITH RAILS LESS THAN 3'-0" LONG, STRIPES 4" WIDE SHALL BE USED. IDENTIFICATION MARKINGS MAY BE SHOWN ONLY ON BACK SIDE OF BARRICADE RAILS.

STRIPING SHOULD COVER THE FULL WIDTH OF THE RAIL. STRIPING OF RAILS, PANELS, ETC. SHOULD SLOPE DOWNWARD AT AN ANGLE OF 45° DEGREES IN DIRECTIONS TRAFFIC IS TO PASS.

WHERE A BARRICADE EXTENDS ENTIRELY ACROSS A ROADWAY, IT IS DESIRABLE THAT THE STRIPES SLOPE DOWNWARD IN THE DIRECTION TOWARD WHICH TRAFFIC MUST TURN IN DETOURING. WHEN BOTH RIGHT AND LEFT TURNS ARE PROVIDED FOR, THE CHEVRON STRIPING MAY SLOPE DOWNWARD IN BOTH DIRECTIONS FROM THE CENTER OF THE BARRICADE.

CITY OF HOUSTON
DEPARTMENT OF PUBLIC WORKS AND ENGINEERING
ENGINEERING, CONSTRUCTION AND REAL ESTATE DIVISION

BARRICADE STANDARD

(NOT TO SCALE)

APPROVED BY: CITY ENGINEER	APPROVED BY: DIRECTOR OF PUBLIC WORKS AND ENGINEERING
EFF DATE: OCT-01-2002	DWG NO: 01580-01

No.	Date	Revisions	App.

STATE OF TEXAS
SRINIVAS A. VELLORE
99425
REGISTERED PROFESSIONAL ENGINEER
01/26/11

AMANI ENGINEERING, INC.
8313 SOUTHWEST FREEWAY
SUITE 350
HOUSTON, TEXAS 77074
TEL: (713) 270-5700
TBPE REG. NO.: F-4528

Binkley & Barfield, Inc
consulting engineers
Texas Registration Number F-257
1710 Seamist Drive
Houston, Texas 77008-3189
(713) 869-3433

SURVEYED BY: AMANI ENG. | FIELD BOOK NO.: P-5486

CITY OF HOUSTON
DEPARTMENT OF PUBLIC WORKS AND ENGINEERING

ALMEDA SIMS WWTP & SPF IMPROVEMENTS PACKAGE II

PROPOSED CHEMICAL FEED FACILITY DRIVEWAY

TRAFFIC CONTROL PLAN
BARRICADE DETAILS

FILE NO: -	
WBS: R-000298-0005-4	
DRAWING SCALE	AS SHOWN
CITY OF HOUSTON PM	IRAJ RANJBAR, P.E.
DWG NO.: T-101	
SHEET NO. 147 OF 147	

ACCEPTED & FILED
49061-
CITY DRAWING NUMBER

COLOR TABLE:

ORIGINAL SCALE IN INCHES FOR REDUCED PLANS
0 1 2 3

V:\Cadd\2009\09017 B&B-AlmedaSimsPlant\TCP\TCP Details.dwg Sep 21,2011 - 8:11am calpough

CITY OF HOUSTON

DEPARTMENT OF PUBLIC WORKS AND ENGINEERING
ENGINEERING AND CONSTRUCTION DIVISION

ALMEDA SIMS WASTEWATER TREATMENT PLANT AND SLUDGE PROCESSING FACILITIES IMPROVEMENTS PACKAGE - 3

WBS NO. R-000298-0008-4

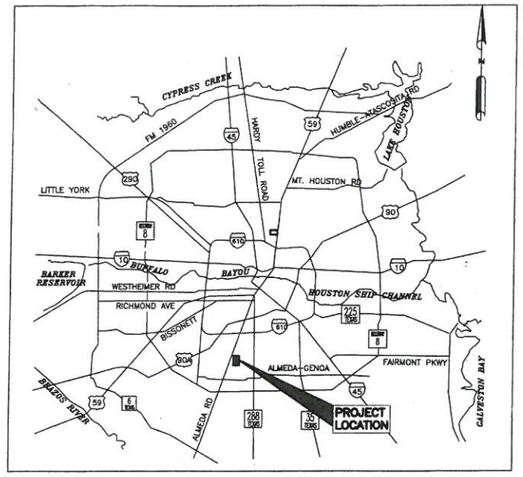

LOCATION MAP

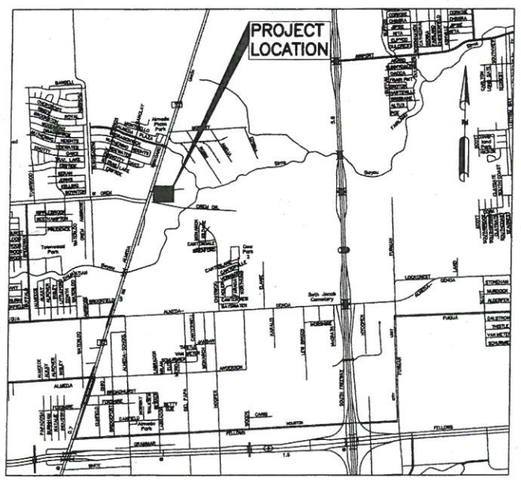

VICINITY MAP

KEY MAP NO: 572 L & M
GIMS MAP NO: 5352C
COUNCIL DISTRICT: D

3/26/13

MAYOR
ANNISE D. PARKER

CONTROLLER
RONALD C. GREEN

DISTRICT COUNCIL MEMBERS

HELENA BROWN DISTRICT A	JERRY DAVIS DISTRICT B	ELLEN COHEN DISTRICT C	WANDA ADAMS DISTRICT D
DAVE MARTIN DISTRICT E	AL HOANG DISTRICT F	OLIVER PENNINGTON DISTRICT G	EDWARD GONZALEZ DISTRICT H
JAMES G. RODRIGUEZ DISTRICT I	MIKE LASTER DISTRICT J	LARRY GREEN DISTRICT J	

COUNCIL MEMBERS AT-LARGE

STEPHEN C. COSTELLO POSITION 1	ANDREW C. BURKS JR. POSITION 2
MELISSA NORIEGA POSITION 3	C.O. "BRAD" BRADFORD POSITION 4
JACK CHRISTIE POSITION 5	

LJA Engineering, Inc.
2929 Briarpark Drive Phone 713.953.5200
Suite 600 Fax 713.953.5026
Houston, Texas 77042 FRN - F-1386

SURVEYED BY: AMANI ENGINEERING, INC.
FB No. P-5679

STATE OF TEXAS
MELEDA SIERRA
96809
LICENSED PROFESSIONAL ENGINEER
3/18/2013

N/A
WATER

3/19/13
WASTEWATER

N/A
STORMWATER

N/A
STREET & BRIDGE

3/26/13
CONSTRUCTION

N/A
TRAFFIC AND TRANSPORTATION

N/A
SIGNALS

3/25/13
MANAGING ENGINEER/ASSISTANT DIRECTOR

N/A
PARK-FORESTRY DEPT.

3/19/2013
SPONSOR DIV. / DEPT.

3/27/13
8/27/13
CITY ENGINEER DATE

8/27/13
DIRECTOR OF PUBLIC WORKS AND ENGINEERING DATE

SHEET No: 1 OF 117 SHEETS

FOR CITY OF HOUSTON USE ONLY

PUBLIC WORKS AND ENGINEERING
50431
CITY REGISTERED
HOUSTON, TEXAS

INDEX OF DRAWINGS

SHT NO.	DWG NO.	DESCRIPTION
		GENERAL DRAWINGS
1	G-1	COVER SHEET
2	G-2	INDEX SHEET
3	G-3	GENERAL NOTES
4	G-4	LEGEND & ABBREVIATIONS
5	G-5	PROCESS FLOW DIAGRAM 1 OF 2
6	G-6	PROCESS FLOW DIAGRAM 2 OF 2
		SURVEY DRAWINGS
7	C-1	PARTIAL TOPOGRAPHIC SURVEY & SURVEY CONTROL MAP
		CIVIL DRAWINGS
8	C-2	EXISTING OVERALL PLAN
9	C-3	PROPOSED OVERALL AND DEMOLITION PLAN
10	C-4	PROPOSED SITE PLAN 1
11	C-5	PROPOSED SITE PLAN 2
		MECHANICAL DRAWINGS
12	M-101	WEST LIFT STATION GROUND LEVEL PLAN
13	M-102	WEST LIFT STATION MECHANICAL PLAN AT ELEVATION 53.00
14	M-103	WEST LIFT STATION MECHANICAL PLAN AT ELEVATION 7.16
15	M-104	WEST LIFT STATION MECHANICAL PLAN AT ELEVATION -2.00
16	M-105	WEST LIFT STATION MECHANICAL SECTION (SHEET 1 OF 4)
17	M-106	WEST LIFT STATION MECHANICAL SECTION (SHEET 2 OF 4)
18	M-107	WEST LIFT STATION MECHANICAL SECTION (SHEET 3 OF 4)
19	M-108	WEST LIFT STATION MECHANICAL SECTION (SHEET 4 OF 4)
20	M-109	WEST LIFT STATION CONCEPTUAL BYPASS PUMPING PLAN
21	M-201	AERATION BASIN CLEANING AND BYPASS PLAN 1 OF 2
22	M-202	AERATION BASIN CLEANING AND BYPASS PLAN 2 OF 2
23	M-203	AERATION BASIN IMPROVEMENT PLAN
24	M-204	AERATION BASIN IMPROVEMENT ELEVATION
25	M-205	AERATION BASIN IMPROVEMENT DETAILS
26	M-301	EXIST CLARIFIER NO. 4 MECHANISM DEMOLITION PLAN
27	M-302	EXIST CLARIFIER NO. 4 MECHANISM DEMOLITION SECTION
28	M-303	EXISTING CLARIFIER NO. 4 STRUCTURAL DETAILS
29	M-304	CLARIFIER NO. 4 PROPOSED MECHANISM PLAN
30	M-305	CLARIFIER NO. 4 PROPOSED MECHANISM SECTIONS
31	M-306	CLARIFIER NO. 4 PROPOSED MECHANISM DETAILS
32	M-401	DRAIN BOX NO. 2 VALVE REPLACEMENT
33	M-501	EXISTING SCUM PUMP STATION DEMOLITION PLAN
34	M-502	EXISTING SCUM PUMP STATION DEMOLITION SECTIONS
35	M-503	PROPOSED SCUM PUMPS PLAN
36	M-504	PROPOSED SCUM PUMPS ELEVATION
37	M-505	PROPOSED SCUM FORCEMAIN DISCHARGE PLAN
38	M-506	PROPOSED SCUM FORCEMAIN DISCHARGE ELEVATION
39	M-601	EXISTING CHLORINE CONTACT BASIN DEMOLITION PLAN
40	M-602	EXISTING CHLORINE CONTACT BASIN DEMOLITION ELEVATION
41	M-603	EXISTING BLOWER BUILDING DEMOLITION 1 OF 2
42	M-604	EXISTING BLOWER BUILDING DEMOLITION 2 OF 2
43	M-605	PROPOSED CHLORINE CONTACT BASIN IMPROVEMENT PLAN
44	M-606	PROPOSED CHLORINE CONTACT BASIN IMPROVEMENT ELEVATIONS
45	M-607	PROPOSED POST-AERATION BLOWERS
46	M-608	DISINFECTION AND POST-AERATION MECHANICAL DETAILS
47	M-701	EXISTING SODIUM HYPOCHLORITE TANKS DEMOLITION PLAN AND ELEVATION
48	M-702	PROPOSED SODIUM HYPOCHLORITE TANKS PLAN AND ELEVATION
		STANDARD DETAIL DRAWINGS
49	D-101	CIVIL DETAILS
50	D-102	PAVEMENT DETAILS
51	D-103	BARRICADE DETAILS
52	D-104	CONSTRUCTION SIGN DETAIL

SHT NO.	DWG NO.	DESCRIPTION
		STORM WATER POLLUTION PREVENTION DRAWINGS
53	S-1	STORM WATER POLLUTION PREVENTION PLAN SHEET 1 OF 2
54	S-2	STORM WATER POLLUTION PREVENTION PLAN SHEET 2 OF 2
55	S-3	STORM WATER POLLUTION PREVENTION PLAN DETAILS
		ELECTRICAL & INSTRUMENTATION DRAWINGS
56	E-01	ELECTRICAL LEGEND & SYMBOLS
57	E-02	GENERAL NOTES
58	E-03	CABLE CODES
59	E-04	OVERALL SITE PLAN
60	EA-01	WEST LIFT STATION PARTIAL SITE PLAN
61	EA-02	WEST LIFT STATION 480V MCC MODIFIED ONE-LINE DIAGRAM W/ EXISTING MCC ELEVATION
62	EA-03	WEST LIFT STATION ELECTRICAL ROOM PLAN AND ELEVATIONS
63	EA-04	WEST LIFT STATION DRY WELL LIGHTING - I
64	EA-05	WEST LIFT STATION DRY WELL LIGHTING - II
65	EB-01	EAST LIFT STATION PARTIAL DEMOLITION & MODIFICATION PARTIAL SITE PLAN & PHOTOS
66	EB-02	EAST LIFT STATION SUBSTATION DEMOLITION ONE-LINE DIAGRAM AND PHOTO
67	EB-03	EAST LIFT STATION SUBSTATION DEMOLITION AND MODIFICATION PLAN AND ELEVATIONS
68	EB-04	EAST LIFT STATION SUBSTATION MODIFICATION ONE-LINE DIAGRAM
69	EC-01	CLARIFIER AREAS AND CHLORINE CONTACT BASINS DEMOLITION PARTIAL SITE PLAN & PHOTOS
70	EC-02	CLARIFIER AREAS AND CHLORINE CONTACT BASINS MODIFICATION PARTIAL SITE PLAN
71	EC-03	CLARIFIER NO1 , NO2, & NO3 PARTIAL SITE PLAN & DETAILS
72	EC-04	CLARIFIER NO4 , & NO5, CHLORINE CONTACT BASINS MODIFICATION PARTIAL SITE PLAN & DETAILS
73	EC-05	MCC-2 DEMOLITION ONE-LINE DIAGRAM & ELEVATION
74	EC-06	MCC-2 MODIFICATION ONE-LINE DIAGRAM & ELEVATION
75	EC-07	MCC-2 BUILDING PLAN MODIFICATION ELECTRICAL PLAN
76	EC-08	PANEL "DP" ONE-LINE DIAGRAM AND PANEL D THRU D3 MODIFICATION PHOTO
77	EC-09	PANEL D, D1, D2, & D3 PANEL SCHEDULES
78	EC-10	AERATION TANKS POWER PLAN & PARTIAL ONE-LINE DIAGRAM
79	EC-11	CONTROL BUILDING MODIFICATION POWER PLAN
80	EC-12	SCUM PUMPS SC-P510 AND SC-P520 ENLARGED ELECTRICAL PLANS
81	EC-13	SCUM PUMPS SC-P530 AND SC-P540 ENLARGED ELECTRICAL PLANS
82	EC-14	SCUM PUMPS SC-P550 ENLARGED ELECTRICAL PLAN & DETAILS
83	EC-15	SCUM PUMPS RISER DIAGRAM
84	EC-16	CLARIFIER NO.CL-540 MODIFICATIONS PLANS
85	EC-17	CLARIFIER NO.CL-540 RISER DIAGRAM AND DETAILS
86	EC-18	MCC-4 ONE-LINE DIAGRAM
87	EC-19	MCC-4 BUILDING PLAN AND ELEVATIONS
88	EC-20	CHLORINE CONTACT BASIN ELECTRICAL PLAN
89	EC-21	MIXERS RISER DIAGRAM
90	EC-22	ELECTRICAL DETAILS
91	EC-23	ELECTRICAL INTERFACE DIAGRAM
92	EC-24	SODIUM HYPOCHLORITE TANKS & SODIUM BIOSULFITE TANK PLANS & RISER DIAGRAMS
93	EC-25	ELECTRICAL LOAD ANALYSIS
94	EY-01	SCHEMATICS - I
95	EY-02	SCHEMATICS - II
96	EZ-01	ELECTRICAL STANDARD DETAILS
97	EZ-02	ELECTRICAL STANDARD DETAILS
98	EZ-03	ELECTRICAL STANDARD DETAILS
99	EZ-04	ELECTRICAL STANDARD DETAILS
100	I-01	INSTRUMENTATION LEGEND & SYMBOLS
101	I-02	LOGICAL NETWORK DIAGRAM
102	I-03	ELECTRICAL BUILDING FP-500 PLC ENCLOSURE
103	I-04	INSTRUMENTATION CLARIFIER AREA SCUM PUMP P&ID
104	I-05	INSTRUMENTATION AERATION NEW EQUIPMENT P&ID - I
105	I-06	INSTRUMENTATION AERATION NEW EQUIPMENT P&ID - II
106	I-07	CONTROL BUILDING NEW PLC LAYOUT
107	I-08	CONTROL BUILDING NEW PLC DETAIL
108	I-09	CONTROL BUILDING NEW PLC WIRING DIAGRAM - I
109	I-10	CONTROL BUILDING NEW PLC WIRING DIAGRAM - II
110	I-11	CONTROL BUILDING NEW PLC WIRING DIAGRAM - III
111	I-12	CONTROL BUILDING NEW PLC WIRING DIAGRAM - IV
112	I-13	CONTROL BUILDING NEW PLC WIRING DIAGRAM - V
113	I-14	CONTROL BUILDING NEW PLC WIRING DIAGRAM - VI
114	I-15	CONTROL BUILDING NEW PLC WIRING DIAGRAM - VII
115	I-16	PANEL FP-500 DEMOLITION & MODIFICATION DETAIL
116	I-17	PLC FP-500 REMOTE RACK PANEL LAYOUT DETAIL
117	IZ-01	INSTRUMENTATION INSTALLATION DETAILS

DATE	REVISION	BY

STATE OF TEXAS
MELISSA SIERRA
96809
LICENSED
PROFESSIONAL ENGINEER
3/18/2013

LJA Engineering Inc.
2929 Briarpark Drive
Suite 600
Houston, Texas 77042
Phone 713.953.5200
Fax 713.953.5026
FRN - F-1386

SURVEYED BY: AMANI ENG. | FB NO.: P-5679

CITY OF HOUSTON
DEPARTMENT OF PUBLIC WORKS AND ENGINEERING

ALMEDA SIMS WWTP & SPF IMPROVEMENTS PACKAGE-3

INDEX SHEET

WBS NUMBER	R-000298-0008-4
DRAWING SCALE	SCALE: N.T.S.
CITY OF HOUSTON, P.M.	IRAJ RANJBAR, P.E.
SHEET NO.	2 OF 117

DWG: G-2

HOUSTON, TEXAS

E:\Projects\2005\2011\PHASE II\2 Index Sheet.dwg

ORIGINAL SCALE IN INCHES

AT&T TEXAS/SWBT FACILITIES

1. THE LOCATIONS OF AT&T TEXAS/SWBT FACILITIES ARE SHOWN IN AN APPROXIMATE WAY ONLY. THE CONTRACTOR SHALL DETERMINE THE EXACT LOCATION BEFORE COMMENCING WORK. HE AGREES TO BE FULLY RESPONSIBLE FOR ANY AND ALL DAMAGES WHICH MIGHT BE OCCASIONED BY THIS FAILURE TO EXACTLY LOCATE AND PRESERVE THESE UNDERGROUND UTILITIES.

2. THE CONTRACTOR SHALL CALL 1-800-344-8377 A MINIMUM OF 48 HOURS PRIOR TO CONSTRUCTION TO HAVE UNDERGROUND LINES FIELD LOCATED.

3. WHEN EXCAVATING WITHIN EIGHTEEN INCHES (18') OF THE INDICATED LOCATION OF AT&T TEXAS/SWBT FACILITIES, ALL EXCAVATIONS MUST BE ACCOMPLISHED USING NON-MECHANIZED EXCAVATION PROCEDURES. WHEN BORING, THE CONTRACTOR SHALL EXPOSE THE AT&T TEXAS/SWBT FACILITIES.

4. WHEN AT&T TEXAS/SWBT FACILITIES ARE EXPOSED, THE CONTRACTOR WILL PROVIDE SUPPORT TO PREVENT DAMAGE TO THE CONDUIT DUCTS OR CABLES. WHEN EXCAVATING NEAR TELEPHONE POLES THE CONTRACTOR SHALL BRACE THE POLE FOR SUPPORT.

5. THE PRESENCE OR ABSENCE OF AT&T TEXAS/SWBT UNDERGROUND CONDUIT FACILITIES OR BURIED CABLE FACILITIES SHOWN ON THESE PLANS DOES NOT MEAN THAT THERE ARE NO DIRECT BURIED CABLES OR OTHER CABLES IN CONDUIT IN THE AREA.

6. PLEASE CONTACT THE AT&T TEXAS DAMAGE PREVENTION MANAGER MR. ROOSEVELT LEE JR. AT (713)567-4552 OR E-MAIL HIM AT RL7259@ATT.COM, IF THERE ARE QUESTIONS ABOUT BORING OR EXCAVATING NEAR OUR AT&T TEXAS/SWBT FACILITIES.

CENTERPOINT ENERGY (GAS)

CAUTION: UNDERGROUND GAS FACILITIES

LOCATIONS OF CENTERPOINT ENTERGY MAIN LINES (TO INCLUDE CENTERPOINT ENERGY, INTRASTATE PIPELINE, LLC. WHERE APPLICABLE) ARE SHOWN IN AN APPROXIMATE LOCATION ONLY. SERVICE LINES ARE USUALLY NOT SHOWN. OUR SIGNATURE ON THESE PLANS ONLY INDICATES THAT OUR FACILITIES ARE SHOWN IN APPROXIMATE LOCATION. IT DOES NOT IMPLY THAT A CONFLICT ANALYSIS HAS BEEN MADE. THE CONTRACTOR SHALL CONTACT THE UTILITY COORDINATING COMMITTEE AT (713) 223-4567 OR 1-800-669-8344 A MINIMUM OF 48 HOURS PRIOR TO CONSTRUCTION TO HAVE MAIN AND SERVICE LINES FIELD LOCATED.

- WHEN CENTERPOINT ENERGY PIPE LINE MARKINS ARE NOT VISIBLE, CALL (713) 967-8037 (7:00 A.M. TO 4:30 P.M.) FOR STATUS OF LINE LOCATION REQUEST BEFORE EXCAVATION BEGINS.
- WHEN EXCAVATING WITHIN EIGHTEEN INCHES (18") OF THE INDICATED LOCATION OF CENTERPOINT ENERGY FACILITIES, ALL EXCAVATION MUST BE ACCOMPLISHED USING NON-MECHANIZED EXCAVATION PROCEDURES.
- WHEN CENTERPOINT ENERGY FACILITIES ARE EXPOSED, SUFFICIENT SUPPORT MUST BE PROVIDED TO THE FACILITIES TO PREVENT EXCESSIVE STRESS ON THE PIPING.

THE CONTRACTOR IS FULLY RESPONSIBLE FOR ANY DAMAGES CAUSED BY HIS FAILURE TO EXACTLY LOCATE AND PRESERVE THESE UNDERGROUND FACILITIES.

CENTERPOINT ENERGY (ELECTRIC)

WARNING: OVERHEAD ELECTRICAL LINES

OVERHEAD LINES MAY EXIST ON THE PROPERTY. THE LOCATION OF OVERHEAD LINES HAS NOT BEEN SHOWN ON THESE DRAWINGS AS THE LINES ARE CLEARLY VISIBLE, BUT YOU SHOULD LOCATE THEM PRIOR TO BEGINNING ANY CONSTRUCTION. TEXAS LAW, SECTION 752, HEALTH & SAFETY CODE FORBIDS ACTIVITIES THAT OCCUR IN CLOSE PROXIMITY TO HIGH VOLTAGE LINES, SPECIFICALLY:

- ANY ACTIVITY WHERE PERSON OR THINGS MAY COME WITHIN SIX (6) FEET OF LIVE OVERHEAD HIGH VOLTAGE LINES; AND
- OPERATING A CRANE, DERRICK, POWER SHOVEL, DRILLING RIG, PILE DRIVER, HOISTING EQUIPMENT, OR SIMILAR APPARATUS WITHIN 10 FEET OF LIVE OVERHEAD HIGH VOLTAGE LINES.

PARTIES RESPONSIBLE FOR THE WORK, INCLUDING CONTRACTORS, ARE LEGALLY RESPONSIBLE FOR THE SAFETY OF CONSTRUCTION WORKERS UNDER THIS LAW. THIS LAW CARRIES BOTH CRIMINAL AND CIVIL LIABILITY. TO ARRANGE FOR LINES TO BE TURNED OFF OR REMOVED CALL CENTERPOINT ENERGY AT (713) 207-2222.

ACTIVITIES ON OR ACROSS CENTERPOINT ENERGY FEE OR EASEMENT PROPERTY

NO APPROVAL TO USE, CROSS OR OCCUPY CENTERPOINT FEE OR EASEMENT PROPERTY IS GIVEN. IF YOU NEED TO USE CENTERPOINT PROPERTY, PLEASE CONTACT OUR SURVEYING AND RIGHT OF WAY DIVISION AT (713) 207-6248 OR (713) 207-5769.

GENERAL CONSTRUCTION NOTES

1. CONSTRUCT WASTEWATER COLLECTION SYSTEMS, WATER LINES, STORM DRAINAGE, AND STREET PAVING IN ACCORDANCE WITH THE LATEST EDITION OF THE PUBLICATIONS STANDARD CONSTRUCTION SPECIFICATIONS FOR WASTEWATER COLLECTION SYSTEMS, WATER LINES, STORM DRAINAGE, AND STREET PAVING AND STANDARD CONSTRUCTION DETAILS FOR WASTEWATER COLLECTION SYSTEMS, WATER LINES, STORM DRAINAGE, AND STREET PAVING PUBLISHED BY THE CITY OF HOUSTON, DEPARTMENT OF PUBLIC WORKS AND ENGINEERING.

2. UTILITIES PRESENTED ON THESE DRAWINGS ARE SHOWN BASED ON THE BEST AVAILABLE INFORMATION. CONTRACTOR SHALL VERIFY THE EXACT LOCATIONS IN THE FIELD PRIOR TO COMMENCING CONSTRUCTION. CONTRACTOR SHALL NOTIFY TEXAS ONE CALL AT (713) 223-4567 / 1-800-245-4545 AND LONE STAR ONE CALL AT 1-800-669-8344 AT LEAST 48 HOURS BEFORE PROCEEDING WITH ANY EXCAVATION.

3. CONTRACTOR SHALL BE RESPONSIBLE FOR DAMAGES TO EXISTING WATER, WASTEWATER, STORM WATER LINES AND FACILITIES, AND TRAFFIC CONTROL DEVICES. DAMAGES SHALL BE REPAIRED IN ACCORDANCE WITH THE CITY OF HOUSTON, DEPARTMENT OF PUBLIC WORKS AND ENGINEERING'S STANDARD CONSTRUCTION SPECIFICATIONS FOR WASTEWATER COLLECTION SYSTEMS, WATER LINES, STORM DRAINAGE, AND STREET PAVING AND STANDARD CONSTRUCTION DETAILS FOR WASTEWATER COLLECTION SYSTEMS, WATER LINES, STORM DRAINAGE, AND STREET PAVING, REFERENCED ABOVE, AT NO ADDITIONAL COST.

4. CONTRACTOR SHALL NOTIFY THE OFFICE OF THE CITY ENGINEER, DEPARTMENT OF PUBLIC WORKS AND ENGINEERING AT (713) 863-1450 FOR INSPECTION AT LEAST 48 HOURS PRIOR TO COMMENCING CONSTRUCTION.

5. ADEQUATE DRAINAGE SHALL BE MAINTAINED AT ALL TIMES DURING CONSTRUCTION AND ANY DRAINAGE DITCH OR STRUCTURE DISTURBED DURING CONSTRUCTION SHALL BE RESTORED TO EXISTING CONDITIONS OR BETTER.

6. CONTRACTOR SHALL TAKE NECESSARY PRECAUTIONS TO PROTECT ROOT SYSTEMS OF SHRUBS, PLANTS AND TREES ALONG THE AREA OF EXCAVATION.

7. CONTRACTOR SHALL COMPLY WITH LATEST EDITION OF OSHA REGULATIONS AND THE STATE OF TEXAS LAWS CONCERNING EXCAVATION.

8. CONTRACTOR SHALL MAINTAIN A SET OF REDLINE DRAWINGS RECORDING AS-BUILT CONDITIONS DURING CONSTRUCTION. THESE REDLINE MARKED UP DRAWINGS WILL BE SUBMITTED TO THE DESIGN CONSULTANT WHO WILL MAKE THE CHANGES ON THE ORIGINAL TRACINGS, LABELING EACH SHEET IN THE SET AS "RECORD DRAWINGS", AND RETURNING SAME TO THE CITY ENGINEER.

9. CONTRACTOR MUST REFER TO THE CITY OF HOUSTON STANDARD DETAIL DRAWINGS INCLUDED IN THE CITY OF HOUSTON'S "STANDARD CONSTRUCTION DETAILS FOR WASTEWATER COLLECTION SYSTEMS, WATER LINES, STORM DRAINAGE, AND STREET PAVING" DATED OCTOBER, 2002, FOR ANY OTHER DETAILS NOT INCLUDED IN THE CONSTRUCTION DRAWINGS.

10. UNDERGROUND INFORMATION IS TAKEN FROM DRAWINGS BY BINKLEY AND HOLMES, INC DATED 1972 AND TOPOGRAPHIC SURVEY AND BINKLEY AND BARFIELD FEBRUARY 2008. PIPE AND FACILITY DELINEATION IS BASED ON ENGINEER'S INTERPRETATION OF THIS DATA.

11. CONTRACTOR SHALL REMOVE SOILS, DEBRIS, SALVAGED MATERIAL AND ITEMS IDENTIFIED TO BE REMOVED IN THE DRAWING AND/OR SPECIFICATION AND DISPOSE OFF OF THE CITY PROPERTY AT THE STATE APPROVED DISPOSAL FACILITY WITH CONTRACTOR TRUCKS AT NO ADDITIONAL COST TO CITY OF HOUSTON.

12. EXISTING UTILITY INFORMATION SHOWN IS NOT GUARANTEED TO BE ACCURATE AND ALL INCLUSIVE. ALL EXISTING UTILITY LOCATIONS ARE APPROXIMATE AND SHOULD BE VERIFIED BY THE CONTRACTOR IN ADVANCE OF HIS CONSTRUCTION. ANY CONFLICT OR DISCREPANCY DISCOVERED MUST BE IMMEDIATELY BROUGHT TO THE ENGINEER'S ATTENTION.

13. CONTRACTOR IS CAUTIONED THAT THIS IS AN OPERATING WASTEWATER TREATMENT PLANT AND THE CONTRACTOR MUST TAKE ALL PRECAUTIONS REQUIRED TO INSURE THE OPERABILITY OF THE PLANT INCLUDING, BUT NOT LIMITED TO , COORDINATING THE CONTINUOUS OPERATION OF THE FACILITY WITH THE CITY ENGINEER.

14. THE CONTRACTOR SHALL BE RESPONSIBLE FOR SAFEGUARDING AND PROTECTING ALL MATERIAL AND EQUIPMENT STORED ON THE JOB SITE. THE CONTRACTOR SHALL BE RESPONSIBLE FOR THE STORAGE OF MATERIALS IN A SAFE AND WORKMANLIKE MANNER TO PREVENT INJURIES, DURING AND AFTER WORKING HOURS, UNTIL PROJECT COMPLETION AND CITY ACCEPTANCE.

15. THE LOADING AND UNLOADING OF ALL PIPE, VALVES, HYDRANTS, MANHOLES AND OTHER ACCESSORIES SHALL BE IN ACCORDANCE WITH THE MANUFACTURERS' RECOMMENDED PRACTICES AND SHALL AT ALL TIMES BE PERFORMED WITH CARE TO AVOID ANY DAMAGE TO THE MATERIAL. THE CONTRACTOR SHALL LOCATE AND PROVIDE THE NECESSARY STORAGE AREAS FOR THE MATERIALS AND EQUIPMENT.

16. THE CONTRACTOR SHALL BE RESPONSIBLE FOR THE SHIPPING AND STORING OF ALL MATERIALS. IT SHALL BE THE CONTRACTOR'S RESPONSIBILITY TO EXAMINE SUCH MATERIAL AT THE POINT OF DELIVERY AND TO REJECT ALL DEFECTIVE MATERIAL. ANY DEFECTIVE MATERIAL INCORPORATED INTO THE WORK SHALL BE REMOVED AND REPLACED AT THE CONTRACTOR'S EXPENSE. THERE SHALL BE NO PAYMENT MADE FOR STORED MATERIAL.

17. SURFACE RESTORATION: AT THE END OF ALL CONSTRUCTION PROJECTS, THE CONTRACTOR SHALL RESTORE THE EXISTING FACILITIES, I.E., THE PROPERTY, EQUAL TO OR BETTER THAN EXISTING SITE CONDITIONS PRIOR TO CONSTRUCTION.

18. CONTRACTOR SHALL REMOVE ALL TRASH, EXCESS MATERIAL DEBRIS, ETC. FROM THE SITE UPON COMPLETION OF PROJECT PRIOR TO INSPECTION AND APPROVAL BY THE CITY AND APPROVING AGENCIES.

19. THE CONTRACTOR ON BEHALF OF THE CITY IS TO OBTAIN ALL APPLICABLE AND REQUIRED PERMITS PRIOR TO STARTING CONSTRUCTION.

20. ALL WORK SHALL BE COMPLETED TO THE SATISFACTION OF THE CITY ENGINEER.

STANDARD HCFCD NOTES FOR PLANS

1. NOTIFY THE HARRIS COUNTY FLOOD CONTROL DISTRICT, PROPERTY MANAGEMENT DEPARTMENT IN WRITING AT LEAST 48 HOURS PRIOR TO CONSTRUCTION. SUBMIT THE HCFCD 48 HOUR PRE-CONSTRUCTION NOTIFICATION FORM AND A COPY OF THE APPROVED CONSTRUCTION DRAWINGS TO HCFCD, 9900 NORTHWEST FREEWAY, HOUSTON, TEXAS 77092, ATTN: PROPERTY MANAGEMENT DEPT.

2. ENGINEER SHALL SUBMIT CERTIFICATION LETTER AND RECORD DRAWINGS TO THE HARRIS COUNTY FLOOD CONTROL DISTRICT, PROPERTY MANAGEMENT DEPARTMENT, REQUESTING INSPECTION OF ITEMS CONSTRUCTED IN HARRIS COUNTY FLOOD DISTRICT RIGHT-OFWAY. PRIOR TO REQUESTING INSPECTION, THE DRAINAGE RIGHT-OFWAY AND/OR EASEMENTS SHALL BE STAKED AND FLAGGED.

3. PROTECT, MAINTAIN, AND RESTORE EXISTING BACKSLOPE DRAINAGE SYSTEMS.

4. BACKSLOPE SWALE AND INTERCEPTOR STRUCTURE ELEVATIONS AND LOCATIONS SHOWN ON PLANS ARE APPROXIMATE. FINAL ELEVATIONS AND LOCATIONS SHALL BE FIELD VERIFIED BY THE ENGINEER PRIOR TO INSTALLATION.

5. ESTABLISH TURF GRASS ON ALL DISTURBED ARES WITHIN THE CHANNEL OR DETENTION RIGHT-OF-WAY, EXCEPT THE CHANNEL BOTTOM AND WHERE STRUCTURAL EROSION MEASURES ARE USED. MINIMUM ACCEPTANCE CRITERIA ARE 75% COVERAGE OF LIVE BERMUDA GRASS AND NO EROSION OR RILLS DEEPER THAN 4".

6. BACKFILL IN ACCORDANCE WITH THE HARRIS COUNTY FLOOD CONTROL DISTRICT STANDARD SPECIFICATION, SECTION 02315 – EXCAVATING AND BACKFILLING, OR EQUIVALENT.

7. EXCAVATE CHANNEL FLOWLINE TO DESIGN ELEVATION AS SHOWN ON PLANS AND DOWNSTREAM, AS NECESSARY, TO ENSURE NO WATER SEWER DURING "DRY" CONDITIONS.

8. MAINTAIN FLOW CHANNEL DURING CONSTRUCTION AND RESTORE CHANNEL TO ORIGINAL CONDITION.

9. REMOVE ALL EXCAVATED MATERIAL FROM THE HARRIS COUNTY FLOOD CONTROL DISTRICT OR DRAINAGE RIGHT-OF-WAY. NO FILL IS TO BE PLACED WITHIN A DESIGNATED FLOOD PLAIN AREA WITHOUT FIRST OBTAINING A FILL PERMIT FROM THE APPROPRIATE JURISDICTIONAL AUTHORITY.

10. OBTAIN AND COMPLY WITH ALL APPLICABLE CITY, COUNTY, STATE, AND FEDERAL PERMITS AND APPROVALS, WITH ASSISTANCE FROM ENGINEER, IF NECESSARY.

SANITARY NOTES

1. ALL SEWERS SHALL BE CONSTRUCTED IN ACCORDANCE WITH THE CITY OF HOUSTON'S "STANDARD CONSTRUCTION SPECIFICATION FOR WASTEWATER COLLECTION SYSTEMS, WATER LINES, STORM DRAINAGE, STREET PAVING, AND TRAFFIC" AND ALL CURRENT AMENDMENTS THERETO AND BE SUBJECT TO A STANDARD EXFILTRATION TEST. TESTS ARE TO BE PERFORMED ON THE TOTAL FOOTAGE OF SEWER LINE INCLUDED IN THE PROJECT. REQUIREMENTS OF TEXAS ADMINISTRATIVE CODE, TITLE 30 CHAPTER 317, "DESIGN CRITERIA FOR SEWERAGE SYSTEMS" SHALL GOVERN WHERE CONFLICTS EXIST EXCEPT WHERE CITY REQUIREMENTS ARE OF HIGHER STANDARDS.
2. ALL MANHOLES ARE TO BE PER CITY OF HOUSTON DRAWING NUMBERS 02082-01, 02082-02, 02082N-02, 02082-03, AND 02082N-03 UNLESS OTHERWISE NOTED. USE 2010 VERSION AS APPLICABLE.
3. SANITARY SEWERS MANHOLES WILL HAVE BEDDING AND BACKFILL PER CITY OF HOUSTON DRAWING NO. 02317-08 UNLESS OTHERWISE NOTED.
4. SANITARY SEWER PIPE 6" AND SMALLER SHALL BE SCHEDULE 40 PVC. SANITARY SEWER PIPE 8" AND LARGER SHALL BE SDR-26 PVC.
5. ALL SDR-26 PVC PIPE SHALL MEET ASTM SPECIFICATION D3034 AND USE "FULL BODIED" SDR-26 PVC FITTINGS WITH APPROPRIATE ADAPTERS AND SHALL HAVE A CELL CLASSIFICATION OF 12364-B AS DEFINED IN ASTM D-1784 AND SHALL HAVE DIP SIZE OD AND RUBBER GASKET BELL-AND-SPIGOT TYPE JOINT ENDS, UNLESS OTHERWISE NOTED.
6. AWWA C-900 DR-18 PVC PIPE USES EITHER AWWA C900 DR-18 PVC FITTINGS OR DIP FITTINGS.
7. ALL SANITARY SEWER LINES UNDER PROPOSED OR FUTURE PAVEMENT AND TO A POINT ONE (1) FOOT BACK OF ALL PROPOSED OR FUTURE CURBS SHALL HAVE BEDDING PER CITY OF HOUSTON DRAWING NUMBERS 02317-01, 02317-02, OR 02317-03 AS APPLICABLE, WITH 1 ½ SACK CEMENT/CY STABILIZED SAND BACKFILL UP TO THE BOTTOM OF THE PAVEMENT SUBGRADE. 100 PSI PERFORMANCE RESULTS ARE STILL REQUIRED.
8. ALL SANITARY SEWERS CROSSING WATER LINES WITH A CLEARANCE BETWEEN 12 INCHES AND 9 FEET SHALL HAVE A MINIMUM OF ONE 18' JOINT OF 150 PSI DUCTILE IRON OR (GREEN) C900 PVC PIPE MEETING ASTM SPECIFICATION D2241 CENTERED ON WATER LINE. WHEN WATER LINE IS BELOW SANITARY SEWER PROVIDE MINIMUM 2 FOOT SEPARATION.
9. CONTRACTOR SHALL PROVIDE FOR A MINIMUM HORIZONTAL CLEARANCE OF 9' FEET BETWEEN WATER LINES AND SANITARY SEWER MANHOLES AND LINES.
10. SANITARY SEWER MANHOLE RIMS OUTSIDE OF PROPOSED PAVING WILL BE SET 3' – 6" ABOVE THE SURROUNDING LEVEL FINISHED GRADE AFTER PAVING WITH SLOPED BACKFILL ADDED FOR STORM WATER DRAINAGE AWAY FROM MANHOLE RIM.
11. IN WET STABLE TRENCH AREAS USE BEDDING PER CITY OF HOUSTON DRAWING NUMBER 02317-02 (2002).
12. DEFLECTION TEST: DEFLECTION TESTS SHALL BE PERFORMED ON ALL FLEXIBLE AND SEMI-RIGID SEWER PIPE. THE TEST SHALL BE CONDUCTED AFTER THE FINAL BACKFILL HAS BEEN IN PLACE AT LEAST 30 DAYS. NO PIPE SHALL EXCEED A DEFLECTION OF 5% IF THE DEFLECTION TEST IS TO BE RUN USING A RIGID MANDREL, IT SHALL HAVE A DIAMETER EQUAL TO 95% OF THE INSIDE DIAMETER OF THE PIPE. THE TEST SHALL BE PERFORMED AS PER 30 TAC 317.2 LATEST AMENDMENT AND WITHOUT MECHANICAL PULLING DEVICES. NO BALL-TYPE MANDRELS ALLOWED.
13. INFILTRATION, EXFILTRATION OR LOW-PRESSURE AIR TEST: EITHER OF THE FOLLOWING TESTS SHALL BE PERFORMED AS PER TAC, TITLE 30 317.2 WITHIN THE SPECIFIED TOLERANCES ON ALL GRAVITY SEWERS.
    A. INFILTRATION OR EXFILTRATION TEST: TOTAL LEAKAGE AS DETERMINED BY A HYDROSTATIC HEAD TEST SHALL NOT EXCEED 50 GALLONS PER INCH DIAMETER PER MILE OF PIPE PER 24 HOURS AT A MINIMUM TEST HEAD OF TWO (2) FEET.
    B. LOW-PRESSURE AIR TEST: PERFORM TEST ACCORDING TO UNI-B-6-90 OR OTHER APPROPRIATE PROCEDURES. FOR SECTIONS OF PIPE LESS THAN 36" (INCH) AVERAGE INSIDE DIAMETER, THE MINIMUM ALLOWABLE TIME FOR PRESSURE DROP FROM 3.5 P.S.I.G. TO 2.5 P.S.I.G. SHALL BE AS FOLLOWS:
        - 6" 340 SECONDS OR 0.855(L) FOR TEST LENGTHS GREATER THAN 398'
        - 8" 454 SECONDS OR 1.520(L) FOR TEST LENGTHS GREATER THAN 298'
        - 10" 567 SECONDS OR 2.374(L) FOR TEST LENGTHS GREATER THAN 239'
        - 15" 850 SECONDS OR 5.342(L) FOR TEST LENGTHS GREATER THAN 159'
        - 18" 1020 SECONDS OR 7.693(L) FOR TEST LENGTHS GREATER THAN 133'

        WHERE L = LENGTH OF LINE OF SAME PIPE SIZE IN FEET.
14. "SAN. S. E." INDICATES "SANITARY SEWER EASEMENT"
15. FOR SANITARY MANHOLES (MH) RIMS SET INSIDE OF OR @ CURB & GUTTER PAVEMENT AND/OR BELOW T.C., MH RIMS WILL BE SET FLUSHED WITH AN ABUTTING/CONTAINING PAVED SURFACE. THE (VALCUN, NEENAH OR EQUAL) HEAVY DUTY BOLTED SOLID MH COVER WILL BE PROPERLY (AND SECURELY) ATTACHED AND SEALED TO ITS COMPATIBLE GASKETED FRAME BY USING BOTH: A NEOPRENE GASKET: AND (AT LEAST) 4 COUNTER-SUNK HEX-HEAD COARSE THREADED ½"-13 UNC STAINLESS STEEL BOLTS. THE HEAVY DUTY FRAME MH COVER WILL BE SOLID (NO AIR HOLES). SAID FRAME SHALL BE BOTH EMBEDDED INTO THE MH'S TOP ALSO SECURELY ANCHORED TO THE UNERLYING MH STRUCTURE WITH: EITHER SECURELY ATTACHED EMBEDDED ANCHOR BOLTS; OR THE CONCRETE MH'S EXPOSED REBARS WELDED TO THE FRAME: OR OTHER EQUALLY SECURED METHODS TO PREVENT MH COVER/FRAME BLOW-OFFS/EJECTIONS.

STORM WATER

1. EXISTING ROADSIDE DITCHES AND HCFC DITCHES SHALL BE RESTORED TO THIER ORIGINAL CONDITION BY THE CONTRACTOR IF DISTURBED DURING CONSTRUCTION.

TO ARRANGE FOR LINES TO BE TURNED OFF OR MOVED, CALL CENTERPOINT AT 713-207-2222

PRIVATE UTILITY LINES SHOWN

AT LEAST 48 HOURS BEFORE EXCAVATING IN STREET R.O.W. OR EASEMENTS CALL THE LONE STAR NOTIFICATION 713-223-4567.

Date: 3-14-13
CenterPoint Energy/Electric Facilities
Signature indicates underground electric lines are properly shown. No approval for construction is given.

Date:
Approved for SBC underground facilities only.
Signature valid for one year.

Date: 3-14-13
CenterPoint Energy/Gas Facilities/ENTEX Incorporated
(Gas service lines are not shown)

CABLE COMPANY

DATE	REVISION	BY

STATE OF TEXAS — WILLIAM SIERRA — 96809 — LICENSED PROFESSIONAL ENGINEER
3/14/2013

LJA Engineering Inc.
2929 Briarpark Drive
Suite 600
Houston, Texas 77042
Phone 713.953.5200
Fax 713.953.5026
FRN - F-1386

SURVEYED BY: AMANI ENG. | FB NO.: P-5679

CITY OF HOUSTON
DEPARTMENT OF PUBLIC WORKS AND ENGINEERING

ALMEDA SIMS WWTP & SPF IMPROVEMENTS PACKAGE-3

GENERAL NOTES

WBS NUMBER	R-000298-0008-4
DRAWING SCALE	VERT. 1"=2' HORIZ. 1"=20'
CITY OF HOUSTON, PM	IRAJ RANJBAR, P.E.
SHEET NO.	3 OF 117

DWG: G-3

REGISTERED ENGINEER

I:\Projects\2005\2011\PHASE III\3 General Notes.dwg

DRAWING SYMBOLS LEGEND

EXISTING

- EXISTING STRUCTURES AND SITE BACKGROUND
- EXISTING BARBED WIRE FENCE
- EXISTING CHAINLINK FENCE
- EXISTING ABOVE GROUND PIPING
- EXISTING UNDERGROUND PIPING
- EXISTING DITCH LINE TOP OF BANK
- EXISTING CENTERLINE OF DITCH
- EXISTING EDGE OF ROAD
- EXISTING EDGE OF ASPHALT
- EXISTING CURB LINE
- EXISTING CENTERPOINT ENERGY CONDUIT
- EXISTING PROPERTY LINE, R.O.W., MATCHLINE
- EXISTING GAS LINE
- EXISTING TO BE REMOVED
- EXIST SANITARY LINE 30" AND SMALLER
- EXIST SANITARY LINE LARGER THAN 30"
- EXIST STORM SEWER LINE 30" AND SMALLER
- EXIST STORM SEWER LINE LARGER THAN 30"
- EXIST WATER LINE 24" AND SMALLER
- EXIST WATER LINE LARGER THAN 24"
- EXIST OVERHEAD POWER LINE
- WATER VALVE
- POWER POLE
- CENTERPOINT ENERGY MANHOLE
- INLET (GRATE TYPE)
- TRAVERSE POINT
- ELECTRICAL LIGHT POLE
- POWER POLE w/GUY
- GUARD POST
- EXISTING ELECTRIC JUNCTION BOX
- EXISTING MANHOLE
- EXISTING SPOT ELEVATION
- TEMPORARY BENCHMARK (TBM)
- DIRECTION OF FLOW

PROPOSED

- TO BE REMOVED
- PROPOSED STRUCTURES
- PROPOSED ABOVE GROUND PIPING
- PROPOSED BURIED PIPING < 24"
- PROPOSED BURIED PIPING > 24"
- X 46.00 PROPOSED FINISHED GRADE

GENERAL ABBREVIATIONS

ABS	ABSOLUTE	NFV	NOT FIELD VERIFIED
AC	ASBESTOS CEMENT PIPE	NFIF	NOT FOUND IN FIELD
ADJ	ADJUSTMENT	NG	NATURAL GROUND
ALUM	ALUMINUM	NO	NUMBER
APPROX	APPROXIMATE	ø	DIAMETER
AVG	AVERAGE	NTS	NOT TO SCALE
B	BASELINE	OC	ON CENTER
BLDG	BUILDING	OD	OUTSIDE DIAMETER
BOC	BACK OF CURB	PC	POINT OF CURVATURE
BOT	BOTTOM	PI	POINT OF INTERSECTION
CC	CENTER TO CENTER	PCCP	PRESTRESSED CONCRETE CYLINDER PIPE
CI	CAST IRON	PPCA	POTENTIALLY PETROLEUM CONTAMINATED AREA
CB	CATCH BASIN	PROP	PROPOSED
CO	CLEAN OUT	PH	POST HYDRANT
℄	CENTER LINE	PLA	PLASTIC
CEIP	CENTER POINT INTRASTATE PIPELINE	PT	POINT OF TANGENCY
CLR	CLEARANCE	PVMT	PAVEMENT
COH	CITY OF HOUSTON	R	RADIUS
CONC	CONCRETE	R & R	REMOVE AND REPLACE
CONT	CONTROL OR CONTINUATION	RCP	REINFORCED CONCRETE PIPE
CU.FT.	CUBIC FOOT	REF	REFERENCE
DI	DUCTILE IRON PIPE	REINF	REINFORCING
DIA	DIAMETER	REQ'D	REQUIRED
DWG	DRAWING	RFB	REINFORCED FILTER FABRIC BARRIER
ELEV	ELEVATION	ROW	RIGHT OF WAY
ELECT	ELECTRICAL	SAN	SANITARY
ESMT	EASEMENT	SEC	SECTION
EQUIP	EQUIPMENT	SC	SERVICE CONNECTION
EXIST	EXISTING	SC	STABILIZED CONSTRUCTION EXIT (IN SWPPP)
F	FLOW (IN SWPPP)	SD	SANITARY DRAIN
FF	FACE TO FACE	STL	STEEL
FG	FILTER FABRIC FENCE (ON SWPPP) FINISHED GRADE	SBC	SOUTHWESTERN BELL TELEPHONE
		SWR	SEWER
FH	FIRE HYDRANT	SHT	SHEET
FL	FLOW LINE	STD	STANDARD
FLR	FLOOR	STA	STATION
FM	FORCE MAIN	STM	STORM
GAL	GALLONS	TC	TOP OF CURB
HB	HIGH BANK	TEMP	TEMPORARY
HMAC	HOT MIXED ASPHALT CONCRETE	TOC	TOP OF CONCRETE
HP	HIGH PRESSURE	TOS	TOP OF SLAB
ID	INSIDE DIAMETER	TP	TOP OF PAVEMENT
INV	INVERT	TYP	TYPICAL
IP	INTERMEDIATE PRESSURE	UE	UTILITY EASEMENT
IPB	INLET PROTECTION BARRIER	UHMW	ULTRAHIGH MOLECULAR WEIGHT POLYETHYLENE
LF	LINEAR FEET	VCP	VITRIFIED CLAY PIPE
MAX	MAXIMUM	WL	WATER LINE
MH	MANHOLE	WV	WATER VALVE
MIN	MINIMUM	WM	WATER METER
MON	MONUMENT	WSEL	WATER SURFACE ELEVATION
NA	NOT APPLICABLE		

PIPING ABBREVIATIONS

BOP	BOTTOM OF PIPE	PE	PLAIN END
DIP	DUCTILE IRON PIPE	PO	PUSH ON
DIPUL	DUCTILE IRON UNLINED PIPE	PT	POLYETHLYENE TUBING
FCA	FLANGED COUPLING ADAPTER	PVC	POLYVININYL CHLORIDE
FE	FLANGED END	SCH	SCHEDULE
GALV. STL.	GALVANIZED STEEL	SS	STAINLESS STEEL
MJ	MECHANICAL JOINT	WC	WALL COLLAR
		ø	DIAMETER

SERVICE ABBREVIATIONS

INF FM	INFLUENT FORCE MAIN	EFF	EFFLUENT
INF	INFLUENT	PMR	POLYMER
ML	MIXED LIQUOR	WL	POTABLE WATER
CE	CLARIFIED EFFLUENT	SAN	SANITARY SEWER
DE	DISINFECTED EFFLUENT	SC	SCUM
DR	DRAIN	SHC	SODIUM HYPOCHLORITE
RAS	RETURN ACTIVATED SLUDGE	STM	STORM SEWER
WAS	WASTE ACTIVATED SLUDGE	UV	ULTRA VIOLET
TWAS	THICKENED WASTE ACTIVATED SLUDGE	FM	FORCE MAIN
ADS	AEROBICALLY DIGESTED SLUDGE	GR	GRIT
NPW	NON-POTABLE WATER	PA	PRESSURE AIR
SN	SUPERNATANT	DR	PLANT DRAIN

NOTES:

1. SEE SHEET 56 AND 100 FOR ELECTRICAL, CONTROL AND INSTRUMENTATION LEGEND

DETAIL AND SECTION CROSS REFERENCE SYSTEM

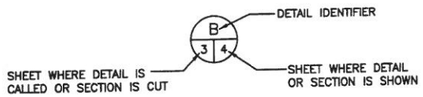

PICTURE REFERENCE SYSTEM

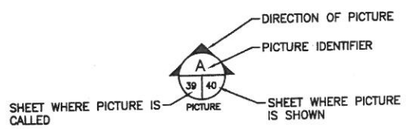

DATE	REVISION	BY

STATE OF TEXAS — MELEDA SIERRA — 96809 — LICENSED PROFESSIONAL ENGINEER
3/18/2013

LJA Engineering Inc.
2929 Briarpark Drive
Suite 600
Houston, Texas 77042
Phone 713.953.5200
Fax 713.953.5026
FRN - F-1386

SURVEYED BY: AMANI ENG. | FB NO.: P-5679

CITY OF HOUSTON

DEPARTMENT OF PUBLIC WORKS AND ENGINEERING

ALMEDA SIMS WWTP & SPF IMPROVEMENTS PACKAGE-3

LEGEND & ABBREVIATIONS

WBS NUMBER	R-000298-0008-4
DRAWING SCALE	SCALE: N.T.S.
CITY OF HOUSTON, PM	IRAJ RANJBAR, P.E.
SHEET NO.	4 OF 117

DWG: G-4

PUBLIC WORKS AND ENGINEERING — 50431 — REGISTERED — CITY ENGINEER — HOUSTON, TEXAS

\\Whou-0002a-fpa\cad\Projdsk1\2005\2011\PHASE II\4 Legend & Abbreviations.dwg

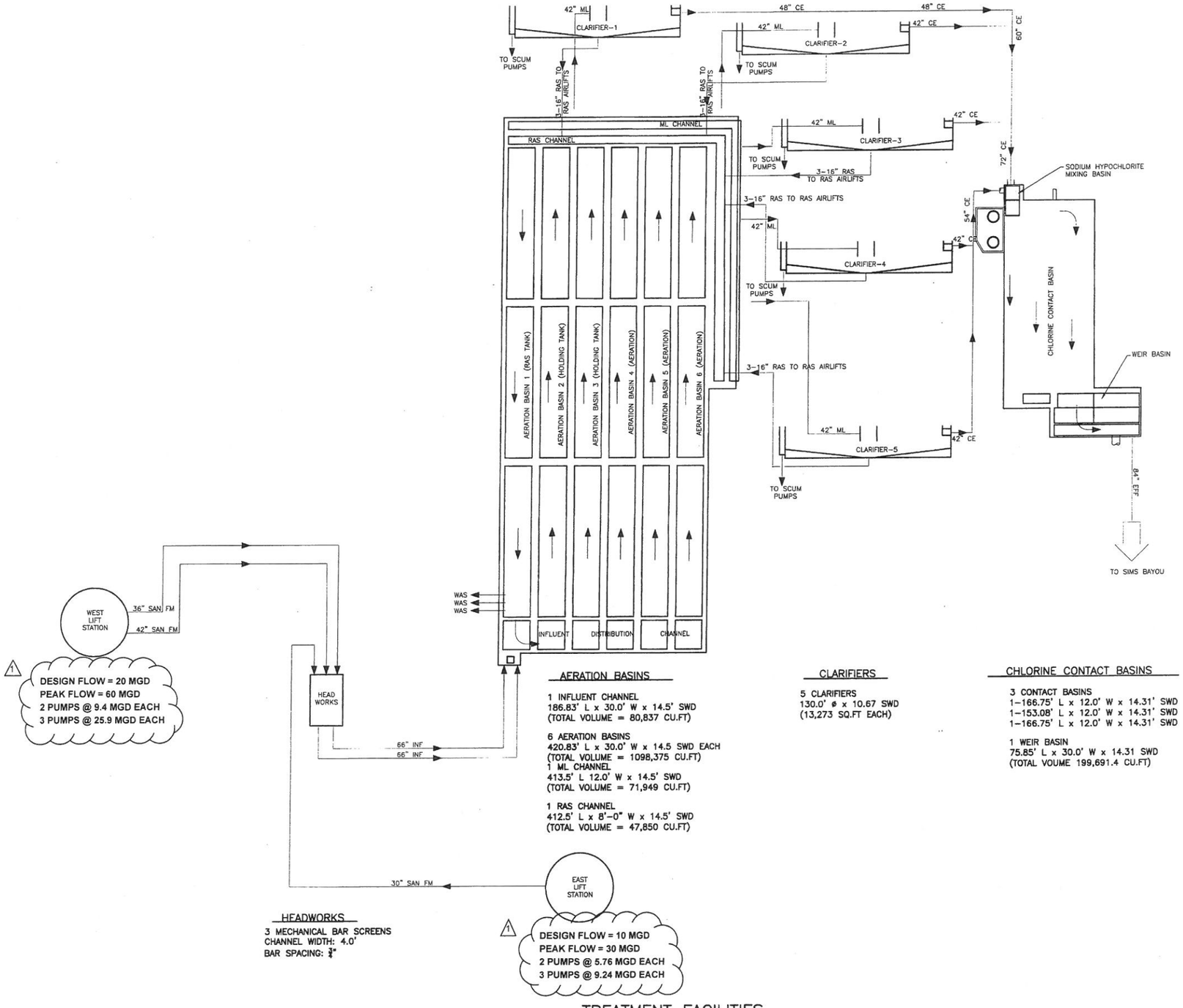

AERATION BASINS

1 INFLUENT CHANNEL
186.83' L x 30.0' W x 14.5' SWD
(TOTAL VOLUME = 80,837 CU.FT)

6 AERATION BASINS
420.83' L x 30.0' W x 14.5 SWD EACH
(TOTAL VOLUME = 1098,375 CU.FT)
1 ML CHANNEL
413.5' L 12.0' W x 14.5' SWD
(TOTAL VOLUME = 71,949 CU.FT)

1 RAS CHANNEL
412.5' L x 8'-0" W x 14.5' SWD
(TOTAL VOLUME = 47,850 CU.FT)

CLARIFIERS

5 CLARIFIERS
130.0' ø x 10.67 SWD
(13,273 SQ.FT EACH)

CHLORINE CONTACT BASINS

3 CONTACT BASINS
1-166.75' L x 12.0' W x 14.31' SWD
1-153.08' L x 12.0' W x 14.31' SWD
1-166.75' L x 12.0' W x 14.31' SWD

1 WEIR BASIN
75.85' L x 30.0' W x 14.31 SWD
(TOTAL VOUME 199,691.4 CU.FT)

HEADWORKS

3 MECHANICAL BAR SCREENS
CHANNEL WIDTH: 4.0'
BAR SPACING: ⅜"

TREATMENT FACILITIES

DATE	REVISION	BY
04/22/13	Lift Stations Flow Revisions	M.S

STATE OF TEXAS
MELEDA SIERRA
95809
LICENSED PROFESSIONAL ENGINEER
3/18/2013

LJA Engineering Inc.
2929 Briarpark Drive
Suite 600
Houston, Texas 77042
Phone 713.953.5200
Fax 713.953.5026
FRN - F-1386

SURVEYED BY: AMANI ENG. | FB NO.: P-5679

CITY OF HOUSTON

DEPARTMENT OF PUBLIC WORKS AND ENGINEERING

ALMEDA SIMS WWTP & SPF IMPROVEMENTS PACKAGE-3

PROCESS FLOW DIAGRAM 1 OF 2

WBS NUMBER	R-000298-0008-4
DRAWING SCALE	SCALE: N.T.S.
CITY OF HOUSTON, PM	IRAJ RANJBAR, P.E.
SHEET NO.	5 OF 117

PUBLIC WORKS & ENGINEERING 56431 CITY ENGINEER HOUSTON, TEXAS

DWG: G-5

ADDENDUM NO. 1

I:\Projdsk1\2005\2011\PHASE II\5 Process Flow Diagrom 1 of 2.dwg

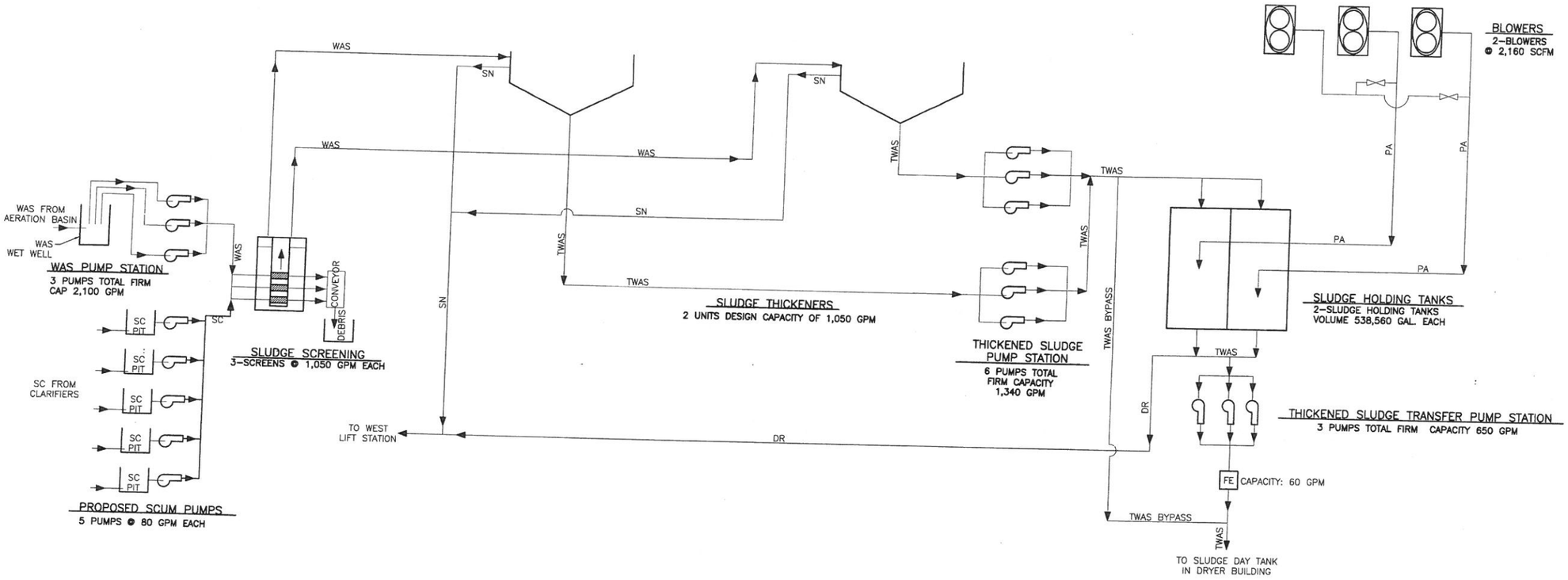

SLUDGE AND SCUM FACILITY

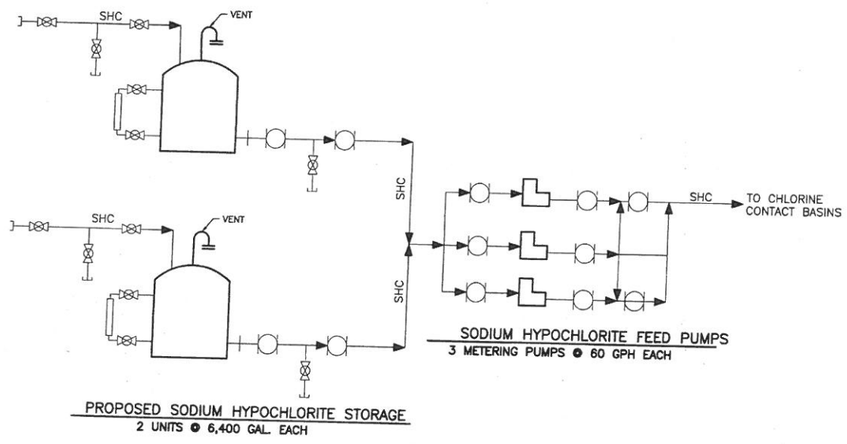

CHLORINE FEED SYSTEM

DATE	REVISION	BY

STATE OF TEXAS
MELIDA SIERRA
96809
LICENSED PROFESSIONAL ENGINEER
3/19/2013

LJA Engineering Inc.
2929 Briarpark Drive
Suite 600
Houston, Texas 77042
Phone 713.953.5200
Fax 713.953.5026
FRN - F-1386

SURVEYED BY: AMANI ENG. | FB NO.: P-5679

CITY OF HOUSTON
DEPARTMENT OF PUBLIC WORKS AND ENGINEERING

ALMEDA SIMS WWTP & SPF IMPROVEMENTS PACKAGE-3

PROCESS FLOW DIAGRAM 2 OF 2

WBS NUMBER	R-000298-0008-4
DRAWING SCALE	SCALE: N.T.S.
CITY OF HOUSTON, PM	IRAJ RANJBAR, P.E.

PUBLIC WORKS & ENGINEERING 50421 HOUSTON, TEXAS

DWG: G-6

\\Whou-0002a-fps\ccd\Projdesk1\2005\2011\PHASE II\6 Process Flow Diagram 2 of 2.dwg

TBM/CONTROL POINTS (GRID COORDINATES)

CP #	NORTHING	EASTING	ELEVATION	DESCRIPTION
1	13793767.92	3109489.22	54.84	"X" Cut In CONC
2	13794091.49	3109680.04	54.83	"X" Cut In CONC
3	13794067.40	3109921.34	51.19	"X" Cut In CONC

PROJECT BENCH MARK

CITY OF HOUSTON MONUMENT	GRID COORDINATES		ELEVATION	DESCRIPTION
	NORTHING	EASTING		
5351-7301	13793740.42	3109518.63	50.13	Brass Disk

AMANI SURVEY ELEVATIONS ARE WITH RESPECT TO A NEW CITY OF HOUSTON MARKER 5351-7301 (NAVD88, GEOID 12) – 0.13' = HARRIS COUNTY FLOODPLAIN REFERENCE MARKER NO. 030085 ELEVATION (NAVD88 (2001 ADJUSTMENT) GEOID '99)

CP-1 -- 'X' IN CONCRETE

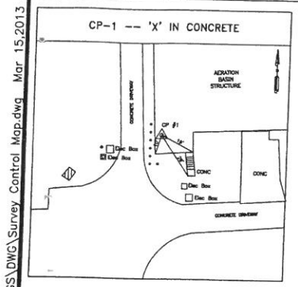

CP-2 -- 'X' IN CONCRETE

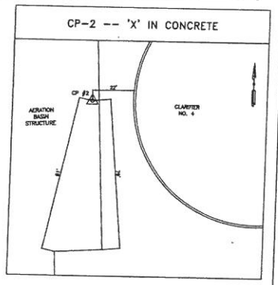

CP-3 -- 'X' IN CONCRETE

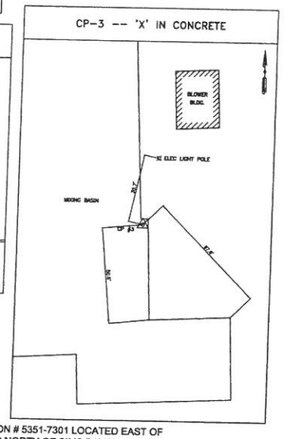

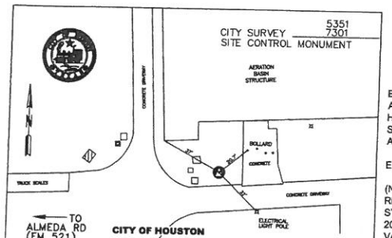

Project WBS# R-000298-0008-4
Texas Coordinate System of 1983, South Central Zone, U. S. Survey Feet
X= 3109518.63
Y= 13793740.42
Lat.= N029° 37' 44.103208"
Lon.= W95° 24' 28.058474"
Reference Frame Used: N/A
Vertical Adjustment used: CONVENTIONAL
GENERAL LOCATION: East of Almeda Rd. (FM 521) and North of Sims Bayou in City of Houston Almeda Sims Wastewater Treatment Plant.
Date Set: 08/08/2012
KEYMAP PAGE: 572 M
Orthometric Elevation = 50.13
Ellipsoid Height= NA
Geoid: 12
Datum Source & Adjustment: STATIC GPS OBSERVATION MADE ON CP # 1 ON 07-31-2012
Type of Mark: COH BRASS DISK

3 Nearest project control points (bearings and distances stated below):
1. CP #1, SET "X" IN CONCRETE, N06°55'02"W, 40.27'
2. CP #2, SET "X" IN CONCRETE, N24°41'28"E, 386.40'
3. CP #3, SET "X" IN CONCRETE, N50°55'30"E, 518.74'

NOTE:
1. Bearings are grid bearings.
2. Scale Factor (S.F.)= 0.999876359710.
3. Surface= Grid S.F.

RICKY R. RICHARDSON 5445 REGISTERED PROFESSIONAL LAND SURVEYOR

BENCHMARK: COH MON # 5351-7301 LOCATED EAST OF ALMEDA (FM 521) AND NORTH OF SIMS BAYOU IN CITY OF HOUSTON ALMEDA SIMS TREATMENT PLANT BEING SOUTHEAST 37 FEET FROM THE SOUTHWEST CORNER OF AERATION BASIN STRUCTURE.

ELEV.= 50.13 [NAVD88 (Computed using GEOID12)]

(NOTE: BEARINGS AND COORDINATES SHOWN HEREON ARE REFERENCED TO THE TEXAS STATE PLANE COORDINATE SYSTEM, SOUTH CENTRAL ZONE, NAD_83 (2011) (EPOCH: 2010.0000). ALL DISTANCES SHOWN HEREON ARE SURFACE VALUES THAT CAN BE CONVERTED TO GRID BY MULTIPLYING BY A COMBINED SCALE FACTOR OF 0.999876359710 . ALL COORDINATES SHOWN HEREON ARE STATE PLANE COORDINATES THAT CAN BE CONVERTED TO SURFACE COORDINATES BY DIVIDING BY THE SAME COMBINED SCALE FACTOR OF 0.999876359710 .)

SCALE FACTOR= 0.999876359710
SURFACE COORDINATES = GRID COORINATES / 0.999876359710

THIS PROJECT IS PARTIALLY IN SHADED ZONE X (AREAS DETERMINED TO BE SPECIAL FLOOD HAZARD AREA SUBJECT TO INUNDATION BY THE 0.2% ANNUAL CHANCE FLOOD EVENT, 500 YEAR FLOODPLAIN), A PORTION IS WITHIN ZONE AE (100 YEAR FLOODPLAIN) AND REMAINING IN UNSHADED ZONE X (ABOVE 500 YEAR FLOODPLAIN). BASE FLOOD ELEVATIONS DETERMINED,ACCORDING TO F.I.R.M. MAP PANEL 48201C0870L, DATED JUNE 18, 2007 LOCATION BY GRAPHIC PLOTTING ONLY. WE DO NOT ASSUME RESPONSIBILITY FOR EXACT DETERMINATION.
BASE FLOOD ELEV = 48.00
500 YEAR FLOOD ELEV = 50.20

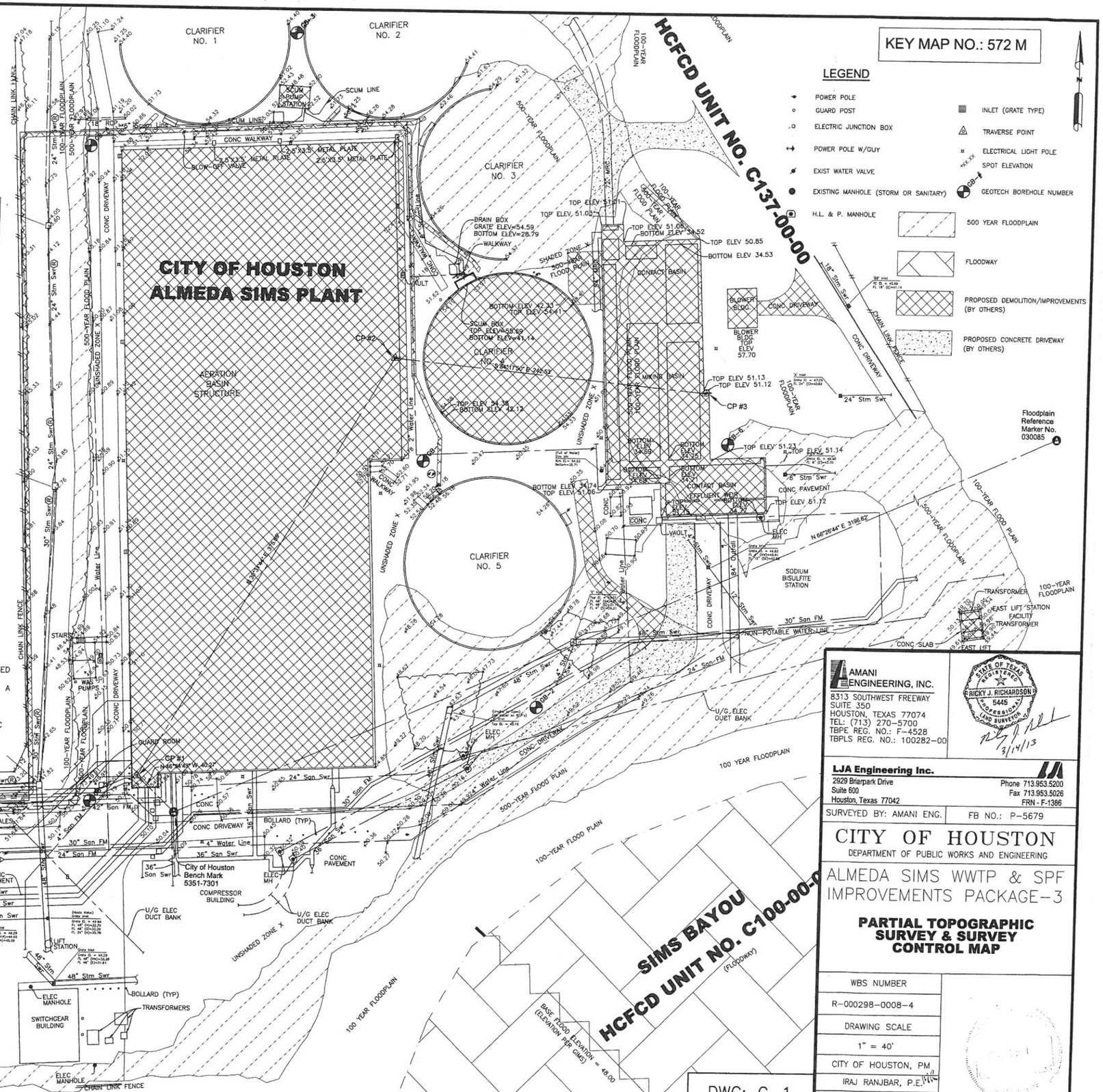

KEY MAP NO.: 572 M

LEGEND

- POWER POLE
- GUARD POST
- ELECTRIC JUNCTION BOX
- POWER POLE W/GUY
- EXIST WATER VALVE
- EXISTING MANHOLE (STORM OR SANITARY)
- H.L. & P. MANHOLE
- INLET (GRATE TYPE)
- TRAVERSE POINT
- ELECTRICAL LIGHT POLE
- SPOT ELEVATION
- GEOTECH BOREHOLE NUMBER
- 500 YEAR FLOODPLAIN
- FLOODWAY
- PROPOSED DEMOLITION/IMPROVEMENTS (BY OTHERS)
- PROPOSED CONCRETE DRIVEWAY (BY OTHERS)

AMANI ENGINEERING, INC.
8313 SOUTHWEST FREEWAY
SUITE 350
HOUSTON, TEXAS 77074
TEL: (713) 270-5700
TBPE REG. NO.: F-4528
TBPLS REG. NO.: 100282-00

RICKY J. RICHARDSON 5445 REGISTERED PROFESSIONAL LAND SURVEYOR
3/14/13

LJA Engineering Inc.
2929 Briarpark Drive
Suite 600
Houston, Texas 77042
Phone 713.953.5200
Fax 713.953.5026
FRN - F-1386

SURVEYED BY: AMANI ENG. | FB NO.: P-5679

CITY OF HOUSTON
DEPARTMENT OF PUBLIC WORKS AND ENGINEERING

ALMEDA SIMS WWTP & SPF IMPROVEMENTS PACKAGE-3

PARTIAL TOPOGRAPHIC SURVEY & SURVEY CONTROL MAP

WBS NUMBER	R-000298-0008-4
DRAWING SCALE	1" = 40'
CITY OF HOUSTON, PM	IRAJ RANJBAR, P.E.
SHEET NO.	7 OF 108

DWG: C-1

V:\Cadd\2012\12028 LJA-AlmedoSimsWWTP\CAD DRAWINGS\DWG\Survey Control Map.dwg Mar 15,2013 - 2:03pm mdutta

COLOR TABLE:

ORIGINAL SCALE IN INCHES FOR REDUCED PLANS

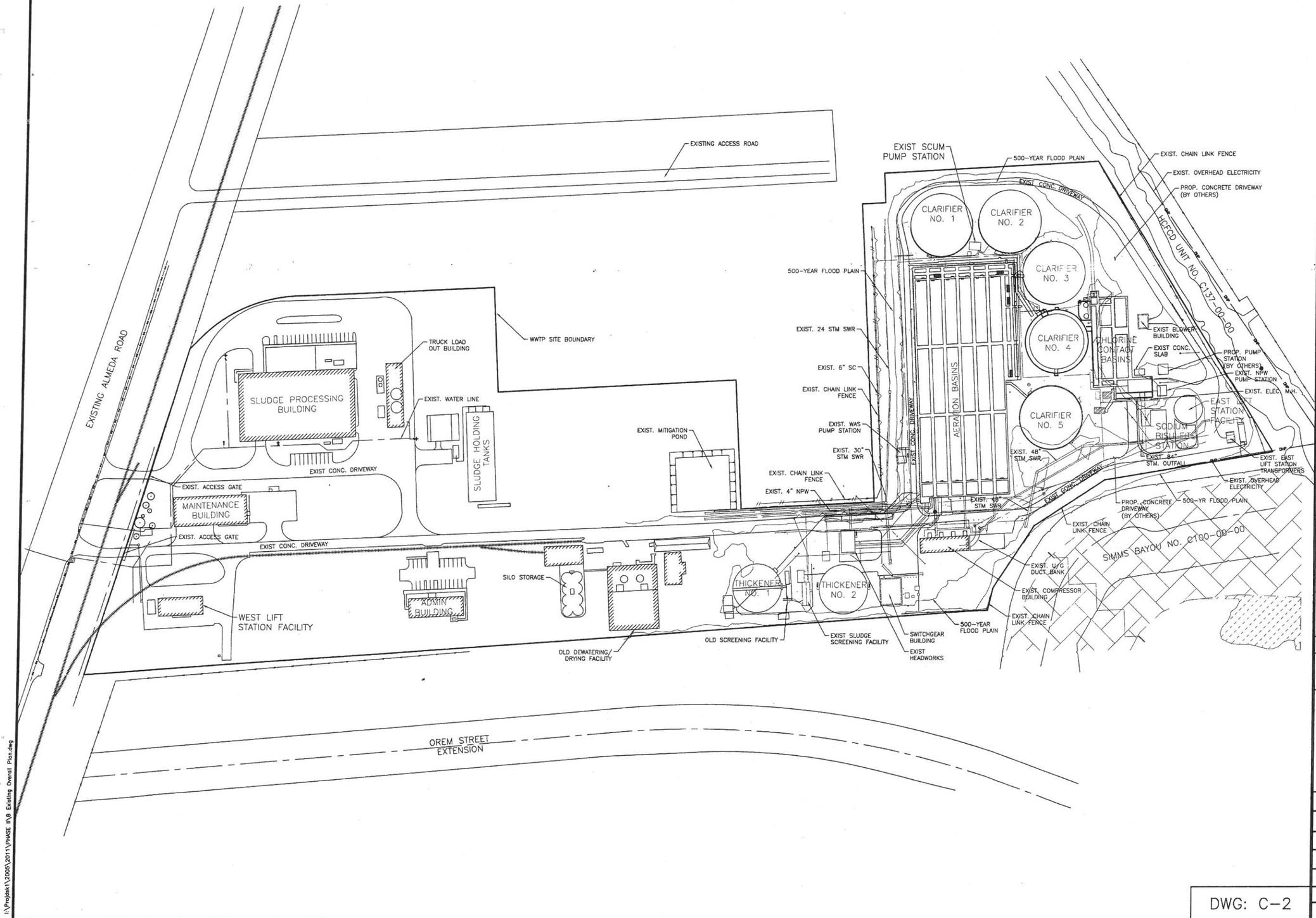

TO ARRANGE FOR LINES TO BE TURNED OFF OR MOVED, CALL CENTERPOINT AT 713-207-2222

PRIVATE UTILITY LINES SHOWN

AT LEAST 48 HOURS BEFORE EXCAVATING IN STREET R.O.W. OR EASEMENTS CALL THE LONE STAR NOTIFICATION 713-223-4567.

Date: 3-14-13
CenterPoint Energy/Electric Facilities
Signature indicates underground electric lines are properly shown. No approval for construction is given.

Date:
Approved for SBC underground facilities only.
Signature valid for one year.

Date: 3-14-13
CenterPoint Energy/Gas Facilities/ENTEX Incorporated
(Gas service lines are not shown)

CABLE COMPANY

DATE	REVISION	BY

STATE OF TEXAS
HELEDA SIERRA
96809
LICENSED PROFESSIONAL ENGINEER
3/14/2013

LJA Engineering Inc.
2929 Briarpark Drive
Suite 600
Houston, Texas 77042
Phone 713.953.5200
Fax 713.953.5026
FRN - F-1386

SURVEYED BY: AMANI ENG. | FB NO.: P-5679

CITY OF HOUSTON
DEPARTMENT OF PUBLIC WORKS AND ENGINEERING

ALMEDA SIMS WWTP & SPF IMPROVEMENTS PACKAGE-3

EXISTING OVERALL PLAN

WBS NUMBER	R-000298-0008-4
DRAWING SCALE	PLAN: 1" = 100'
CITY OF HOUSTON, PM	IRAJ RANJBAR, P.E.
SHEET NO.	8 OF 117

DWG: C-2

PUBLIC WORKS AND ENGINEERING
CONSTRUCTION
50431
CITY ENGINEER
HOUSTON, TEXAS

I:\Projects\2005\2011\PHASE II\8 Existing Overall Plan.dwg

ORIGINAL SCALE IN INCHES

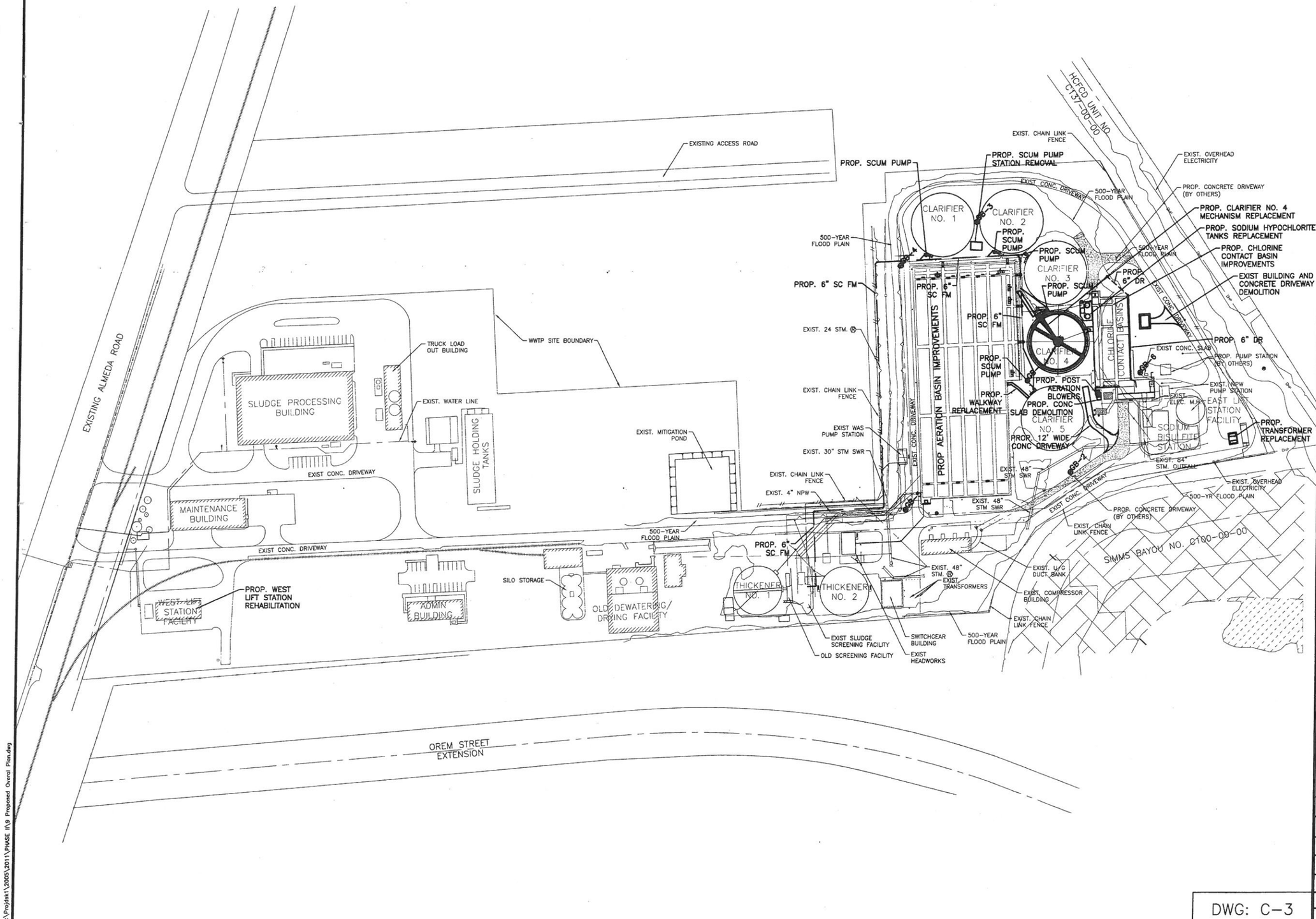

NOTES:

1. UNDERGROUND INFORMATION IS TAKEN FROM DRAWINGS BY BINKLEY AND HOLMES, INC, (RECORD DRAWINGS 16575) DATED 1972 AND BINKLEY AND BARFIELD (RECORD DRAWINGS 44488) DATED FEBRUARY 2008. SOME SURFACE AND MECHANICAL INFORMATION IS TAKEN FROM DRAWINGS BY WESTON (RECORD DRAWINGS P32664) DATED FEBRUARY 1997 AND DRAWINGS BY BINKLEY AND BARFIELD, INC. DATED JANUARY 2012. PIPE AND FACILITY DELINEATION IS BASED ON ENGINEER'S INTERPRETATION OF THIS DATA.
2. RESTORE ANY EXISTING FACILITIES DAMAGED BY CONSTRUCTION ACTIVITIES TO MEET OR EXCEED EXISTING CONDITIONS PRIOR TO THIS PROJECT.
3. EXISTING UTILITIES ARE SHOWN APPROXIMATELY ONLY. IT IS THE CONTRACTOR'S RESPONSIBILITY TO FIELD VERIFY EXACT HORIZONTAL AND VERTICAL LOCATION OF ALL SUCH EXISTING UTILITIES PRIOR TO START OF WORK AND REPORT ANY DISCREPANCIES TO THE CITY ENGINEER IMMEDIATELY.
4. COORDINATE ALL CONSTRUCTION ACTIVITIES WITH THE FACILITY OPERATOR.

TO ARRANGE FOR LINES TO BE TURNED OFF OR MOVED, CALL CENTERPOINT AT 713-207-2222

PRIVATE UTILITY LINES SHOWN

AT LEAST 48 HOURS BEFORE EXCAVATING IN STREET R.O.W. OR EASEMENTS CALL THE LONE STAR NOTIFICATION 713-223-4567.

Date: 3-14-13
CenterPoint Energy/Electric Facilities
Signature indicates underground electric lines are properly shown. No approval for construction is given.

Date:
Approved for SBC underground facilities only.
Signature valid for one year,

Date: 3-14-13
CenterPoint Energy/Gas Facilities/ENTEX Incorporated
(Gas service lines are not shown)

CABLE COMPANY

DATE	REVISION	BY

STATE OF TEXAS
MELINDA SIERRA
96809
LICENSED PROFESSIONAL ENGINEER
3/14/2013

LJA Engineering Inc.
2929 Briarpark Drive
Suite 600
Houston, Texas 77042
Phone 713.953.5200
Fax 713.953.5026
FRN - F-1386

SURVEYED BY: AMANI ENG. | FB NO.: P-5679

CITY OF HOUSTON
DEPARTMENT OF PUBLIC WORKS AND ENGINEERING

ALMEDA SIMS WWTP & SPF IMPROVEMENTS PACKAGE-3

PROPOSED OVERALL AND DEMOLITION PLAN

WBS NUMBER	R-000298-0008-4
DRAWING SCALE	SCALE: 1" = 100'
CITY OF HOUSTON, PM	IRAJ RANJBAR, P.E.
SHEET NO.	9 OF 117

DWG: C-3

PUBLIC WORKS AND ENGINEERING
50431
HOUSTON, TEXAS

I:\Projdata\12005\2011\PHASE II\9 Proposed Overal Plan.dwg

9

NOTES:

1. GRADE SITE TO DRAIN AS SHOWN ON SITE PLAN. MATCH NATURAL GROUND WHERE REQUIRED USING MAXIMUM 10:1 SLOPE.
2. GRADE ALL DISTURBED AREA TO DRAIN.
3. RESTORE ANY EXISTING FACILITIES DAMAGED BY CONSTRUCTION ACTIVITIES TO MEET OR EXCEED EXISTING CONDITIONS PRIOR TO THIS PROJECT.
4. EXISTING UTILITIES ARE SHOWN APPROXIMATELY ONLY. IT IS THE CONTRACTOR'S RESPONSIBILITY TO FIELD VERIFY EXACT HORIZONTAL AND VERTICAL LOCATION OF ALL SUCH EXISTING UTILITIES PRIOR TO START OF WORK.
5. PROCESS PIPE SMALLER THAN 4" SHALL BE HOT DIP GALVANIZED PIPE.
6. PROCESS AND AIR SERVICE PIPE 4" AND LARGER SHALL BE DUCTILE IRON PIPE PER SPECIFICATION.
7. PROVIDE PUSH-ON JOINTS FOR ALL BELOW GROUND PIPING UNLESS OTHERWISE NOTED.
8. ALL PROPOSED FITTINGS SHALL BE STANDARD 45° AND 90° BENDS UNLESS OTHERWISE NOTED.
9. PROVIDE THRUST BLOCK FOR ALL BURIED PRESSURE PIPING IN ACCORDANCE WITH DETAIL ON SHEET 49.
10. CONTRACTOR TO FIELD VERIFY VERTICAL LOCATION OF ALL EXISTING PIPING BEING CROSSED BY PROPOSED YARD PIPING PRIOR TO CONSTRUCTION. USE CAUTION DURING EXCAVATION TO AVOID DAMAGE OF EXISTING UNDERGROUND UTILITIES. CONTRACTOR SHALL PERFORM GROUND PROBING AND POTHOLE TESTING TO AVOID EXISTING DUCTBANK OR PIPES.
11. DEFLECT PROPOSED PIPING UNDER EXISTING ELECTRICAL DUCT BANKS AND PIPING UTILIZING ALL NECESSARY FITTINGS AS REQUIRED.
12. PROVIDE INSULATION FOR ALL LINES SMALLER THAN 4" DIAMETER.
13. ALL ABOVE AND BELOW GRADE PIPING TO BE COLOR CODED ACCORDING TO CITY REQUIREMENTS. SUBMIT TO THE ENGINEER FOR APPROVAL.
14. HYDROMULCH ALL DISTURBED AREAS AND SWALES.
15. COORDINATE CONSTRUCTION ACTIVITIES WITH THE FACILITY OPERATOR.
16. ACCORDING TO THE FEDERAL EMERGENCY MANAGEMENT AGENCY (FEMA) AND THE TROPICAL STORM ALLISON RECOVERY PROJECT (TSARP) MAP 48201C0870L, DATED JUNE 2007, THE PROJECT AREA LIES PARTLY OUTSIDE OF THE 100 YEAR FLOOD PLAIN (UNSHADED ZONE X), AND PARTLY IN THE 500 YEAR FLOOD PLAIN (SHADED ZONE X) OR IN THE 100 YEAR FLOOD PLAIN (ZONE AE). THE CLOSEST 100 YEAR FLOOD PLAIN ELEVATION IS 48.00' ON SIMS BAYOU C100-00-00. THE ALMEDA SIMS WASTEWATER AND SLUDGE PROCESSING FACILITIES FINISHED ELEVATIONS VARY FROM 51 FEET TO 55 FEET. THE ELEVATIONS OF THE AREAS IN THE SOUTH BOUNDARY ARE UNDER THE 100 YEAR FLOOD PLAIN ELEVATION, BUT NO WASTEWATER FACILITIES ARE IN THIS PART OF THE SITE.
17. REPLACE CONCRETE WALKWAY WITH CONCRETE PAVEMENT PER CITY OF HOUSTON DWG 02902-01. PAVEMENT TO MATCH GRADE OF EXIST NATURAL GROUND.
18. ALL PROPOSED EQUIPMENT SHALL BE INSTALLED AT LEAST ONE FOOT OVER THE 500 YR FLOOD PLAIN ELEVATION.
19. CUT AND PLUG EXIST 6" SC FM AT EXIST WAS PUMP STATION (FIELD VERIFY ELEVATION).
20. SEE SHEET 38 FOR CLEAN OUT DETAIL.

N

EXIST SCREENING FACILITY
EXIST CHAIN LINK FENCE
BORE AND JACK PROP 6" SC FM UNDER EXIST CONCRETE PAVEMENT
CONNECT PROP 6" SC FM TO EXIST 14" WAS HEADER SEE SHEET 37
PROP 6" SC FM ℄=30.96'
PROP 6" SC FM
EXIST STM PS
EXIST CONCRETE DRIVEWAY
EXIST THICKENER NO.1
EXIST HEADWORKS
PROP 6" SC FM ℄=30.96'
PROP 6"x45° BEND
PROP 6"x45° BEND
PROP AERATION BASIN CLEANING AND IMPROVEMENTS
4'-0"
EXIST 6" SC FM (ABANDON) SEE NOTE 19
EXIST CHAIN LINK FENCE
PROP 6" SC FM ℄=44.00'
EXIST ELEC MH
EXIST SWITCHGEAR BUILDING
EXIST 48" STM SWR
EXIST 30" STM SWR
EXIST 6" SC FM SEE NOTE 19
EXIST ELEC MH
EXIST GUARD ROOM
EXIST SAN MH
EXIST STAIRS
EXIST WAS PUMP STATION
EXIST HB
EXIST PIPE BOLLARDS (TYP.)
EXIST CHAIN LINK FENCE
EXIST TRANSFORMERS
EXIST U/G ELEC DUCT BANK
EXIST 24" SAN FM
EXIST 30" SAN FM
EXIST CONCRETE DRIVEWAY
PROP 6" SC FM
PROP 6" WYE, ℄=44.00
PROP SC PUMP
EXIST 6" SC FM
EXIST 36" SAN
EXIST 4" WL
EXIST CONCRETE PVMT
AERATION BASIN 1 (RAS TANK)
AERATION BASIN 2 (HOLDING TANK)
AERATION BASIN 3 (HOLDING TANK)
AERATION BASIN 4 (AERATION)
AERATION BASIN 5 (AERATION)
AERATION BASIN 6 (AERATION)
EXIST CLARIFIER NO.1
EXIST DRAIN BOX NO.1
RAS CHANNEL
LIQUOR CHANNEL
EXIST MIXED
EXIST CONCRETE WALKWAY
EXIST COMPRESSOR BUILDING
EXIST U/G ELEC DUCT BANK
EXIST PIPE BOLLARDS (TYP.)
EXIST 36" SAN
EXIST 24" SAN
EXIST 36" SAN SWR
EXIST CONCRETE PVMT
EXIST 30" SAN FM
EXIST CLARIFIER NO.2
EXIST CONCRETE STEP
MATCH LINE A-A
ELEV 52.71 (MATCH EXIST)
PROP REMOVAL AND REPLACEMENT OF CONCRETE WALKWAY (SEE NOTE 17). FILL AREA UNDER EXIST STEPS AND WALKWAY AS NEEDED. DOWEL INTO EXIST CONCRETE STEP.
PROP 6" WYE ℄=44.00
PROP 6" SC FM
PROP SC PUMP

DWG: C-4

DATE	REVISION	BY

STATE OF TEXAS
MELISSA SIERRA
96809
LICENSED PROFESSIONAL ENGINEER
3/15/2013

LJA Engineering Inc.
2929 Briarpark Drive
Suite 600
Houston, Texas 77042
Phone 713.953.5200
Fax 713.953.5026
FRN - F-1386

SURVEYED BY: AMANI ENG. | FB NO.: P-5679

CITY OF HOUSTON
DEPARTMENT OF PUBLIC WORKS AND ENGINEERING

ALMEDA SIMS WWTP & SPF IMPROVEMENTS PACKAGE-3

PROPOSED SITE PLAN I

WBS NUMBER	R-000298-0008-4
DRAWING SCALE	SCALE: 1" = 30'
CITY OF HOUSTON, PM	IRAJ RANJBAR, P.E.
SHEET NO.	10 OF 117

F-10421
HOUSTON, TEXAS

ORIGINAL SCALE IN INCHES

\\ehou-0002a--fps\CAD\Projdat1\2005\2011\PHASE II\10 Prop Site Plan 1.dwg

PROPOSED PAVEMENT CONTROL POINTS			
PT	NORTHING	EASTING	ELEV.
1	13795569.63	3110250.85	MATCH EX.
2	13795617.02	3110280.07	MATCH EX.
3	13795602.94	3110251.66	49.43
4	13795608.64	3110264.11	49.55
5	13795617.41	3110232.25	50.08
6	13795627.03	3110239.42	50.20
7	13795638.32	3110216.78	50.20
8	13795641.99	3110229.32	50.20
9	13795670.62	3110210.73	50.20
10	13795672.82	3110222.50	50.20

1

NOTES:

1. GRADE SITE TO DRAIN AS SHOWN ON SITE PLAN. MATCH NATURAL GROUND WHERE REQUIRED USING MAXIMUM 10:1 SLOPE.
2. GRADE ALL DISTURBED AREA TO DRAIN.
3. RESTORE ANY EXISTING FACILITIES DAMAGED BY CONSTRUCTION ACTIVITIES TO MEET OR EXCEED EXISTING CONDITIONS PRIOR TO THIS PROJECT.
4. EXISTING UTILITIES ARE SHOWN APPROXIMATELY ONLY. IT IS THE CONTRACTOR'S RESPONSIBILITY TO FIELD VERIFY EXACT HORIZONTAL AND VERTICAL LOCATION OF ALL SUCH EXISTING UTILITIES PRIOR TO START OF WORK.
5. PROCESS PIPE SMALLER THAN 4" SHALL BE HOT DIP GALVANIZED PIPE.
6. PROCESS AND AIR SERVICE PIPE 4" AND LARGER SHALL BE DUCTILE IRON PIPE PER SPECIFICATION.
7. PROVIDE PUSH-ON JOINTS FOR ALL BELOW GROUND PIPING UNLESS OTHERWISE NOTED.
8. ALL PROPOSED FITTINGS SHALL BE STANDARD 45° AND 90° BENDS UNLESS OTHERWISE NOTED.
9. PROVIDE THRUST BLOCK FOR ALL BURIED PRESSURE PIPING IN ACCORDANCE WITH DETAIL ON SHEET 49.
10. CONTRACTOR TO FIELD VERIFY VERTICAL LOCATION OF ALL EXISTING PIPING BEING CROSSED BY PROPOSED YARD PIPING PRIOR TO CONSTRUCTION. USE CAUTION DURING EXCAVATION TO AVOID DAMAGE OF EXISTING UNDERGROUND UTILITIES. CONTRACTOR SHALL PERFORM GROUND PROBING AND POTHOLE TESTING TO AVOID EXISTING DUCTBANK OR PIPES.
11. DEFLECT PROPOSED PIPING UNDER EXISTING ELECTRICAL DUCT BANKS AND PIPING UTILIZING ALL NECESSARY FITTINGS AS REQUIRED.
12. PROVIDE INSULATION FOR ALL LINES SMALLER THAN 4" DIAMETER.
13. ALL ABOVE AND BELOW GRADE PIPING TO BE COLOR CODED ACCORDING TO CITY REQUIREMENTS. SUBMIT TO THE ENGINEER FOR APPROVAL.
14. HYDROMULCH ALL DISTURBED AREAS AND SWALES.
15. COORDINATE CONSTRUCTION ACTIVITIES WITH THE FACILITY OPERATOR.
16. ACCORDING TO THE FEDERAL EMERGENCY MANAGEMENT AGENCY (FEMA) AND THE TROPICAL STORM ALLISON RECOVERY PROJECT (TSARP) MAP 48201C0870L, DATED JUNE 2007, THE PROJECT AREA LIES PARTLY OUTSIDE OF THE 100 YEAR FLOOD PLAIN (UNSHADED ZONE X), AND PARTLY IN THE 500 YEAR FLOOD PLAIN (SHADED ZONE X) OR IN THE 100 YEAR FLOOD PLAIN (ZONE AE). THE CLOSEST 100 YEAR FLOOD PLAIN ELEVATION IS 48.00' ON SIMS BAYOU C100-00-00. THE ALMEDA SIMS WASTEWATER AND SLUDGE PROCESSING FACILITIES FINISHED ELEVATIONS VARY FROM 51 FEET TO 55 FEET. THE ELEVATIONS OF THE AREAS IN THE SOUTH BOUNDARY ARE UNDER THE 100 YEAR FLOOD PLAIN ELEVATION, BUT NO WASTEWATER FACILITIES ARE IN THIS PART OF THE SITE.
17. REPLACE CONCRETE WALKWAY WITH CONCRETE PAVEMENT PER CITY OF HOUSTON DWG 02902-01. PAVEMENT TO MATCH GRADE OF EXIST NATURAL GROUND.
18. ALL PROPOSED EQUIPMENT SHALL BE INSTALLED AT LEAST ONE FOOT OVER THE 500 YR FLOOD PLAIN ELEVATION.
19. CUT AND PLUG EXIST 6" SC FM AT EXIST WAS PUMP STATION (FIELD VERIFY ELEVATION).
20. SEE SHEET 38 FOR CLEAN OUT DETAIL.

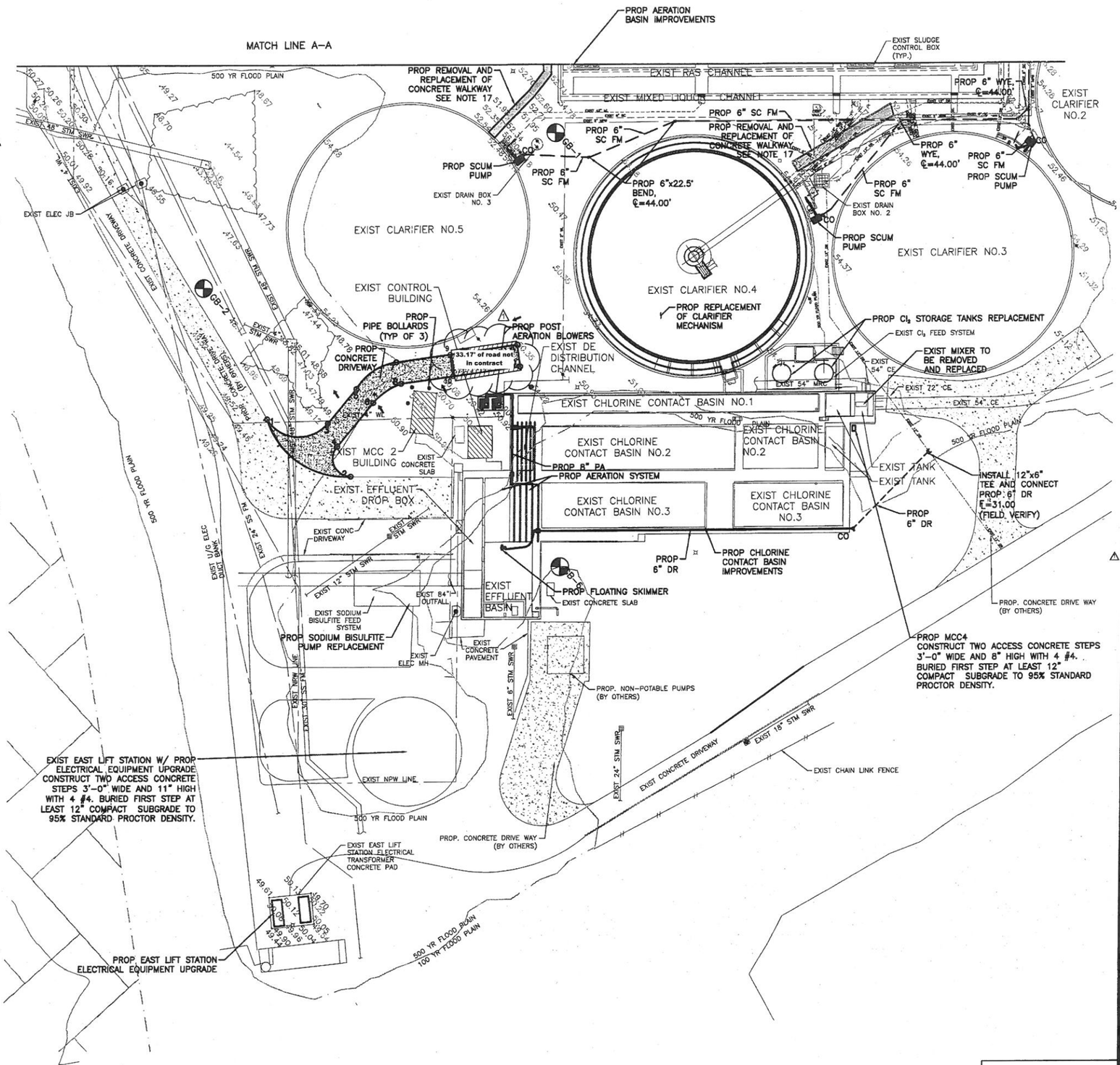

DATE	REVISION	BY
04/24/13	Prop Driveway Revision	MS

STATE OF TEXAS
MELEIDA SIERRA
86809
LICENSED PROFESSIONAL ENGINEER
3/18/2013

LJA Engineering Inc.
2929 Briarpark Drive
Suite 600
Houston, Texas 77042
Phone 713.953.5200
Fax 713.953.5026
FRN - F-1386

SURVEYED BY: AMANI ENG. | FB NO.: P-5679

CITY OF HOUSTON
DEPARTMENT OF PUBLIC WORKS AND ENGINEERING

ALMEDA SIMS WWTP & SPF IMPROVEMENTS PACKAGE-3

PROPOSED SITE PLAN 2

WBS NUMBER
R-000298-0008-4
DRAWING SCALE
SCALE: 1" = 30'
CITY OF HOUSTON, PM
IRAJ RANJBAR, P.E.
SHEET NO. 11 OF 117

DWG: C-5

ADDENDUM NO. 1

\\lhou-0002a-fpa\CAD\Projects1\2005\2011\PHASE II\11 Prop Site Plan 2.dwg

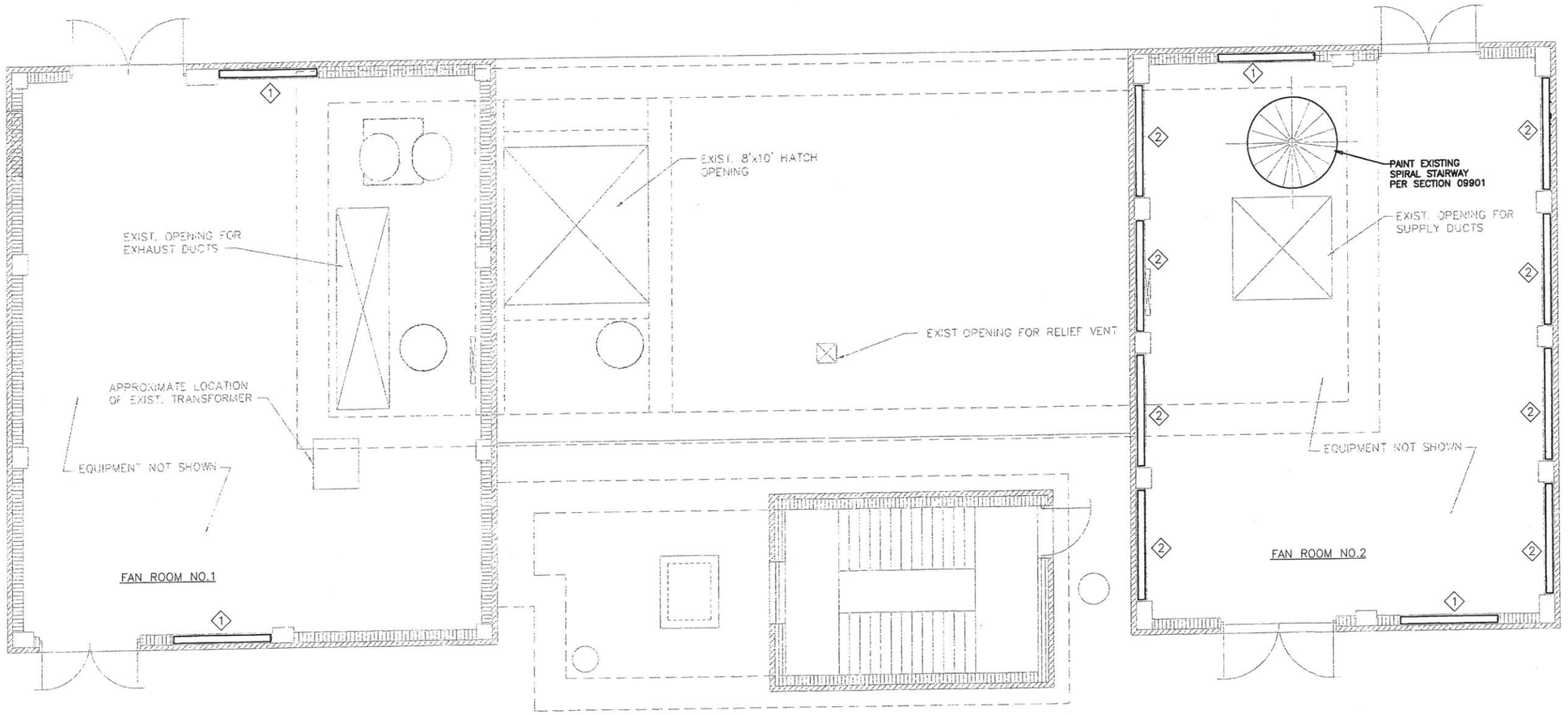

PUMP ROOF SLAB LEVEL (EL. 55.00)

Scale:1/4"=1'-0"

GENERAL NOTES:

1. THIS DRAWING IS A REPRODUCTION OF THE EXISTING LIFT STATION CONSTRUCTION DRAWINGS (RECORD DRAWING NO. P32664, DATED FEBRUARY 1997) AND IS INTENDED TO PROVIDE GENERAL INFORMATION OF THE EQUIPMENT AND ACCESSORIES.
2. CONTRACTOR SHALL DISPOSE OF ANY SLUDGE OR SOLID WASTE IN THE WET WELL. CONTRACTOR SHALL BE RESPONSIBLE FOR TESTING SLUDGE OR SOLID WASTE AND FOR DISPOSAL OF SAME AT A SOLID WASTE DISPOSAL FACILITY IN ACCORDANCE WITH LOCAL STATE AND FEDERAL REGULATIONS AT NO ADDITIONAL COST TO CITY OF HOUSTON.
3. CONTRACTOR SHALL REMOVE SOILS, DEBRIS, SALVAGED MATERIAL AND ITEMS IDENTIFIED TO BE REMOVED IN THE DRAWING AND/OR SPECIFICATION AND DISPOSE OFF OF THE CITY PROPERTY AT STATE APPROVED DISPOSAL FACILITY WITH CONTRACTOR TRUCKS AT NO ADDITIONAL COST TO CITY OF HOUSTON.

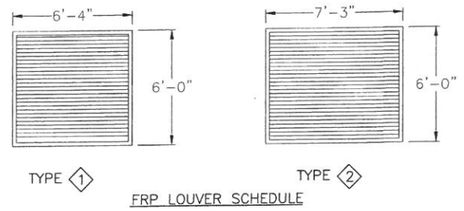

FRP LOUVER SCHEDULE

FRP LOUVER	QTY
TYPE 1	4 NOS.
TYPE 2	8 NOS.

NOTES:

1. REMOVE AND DISPOSE EXISTING LOUVERS AND INSTALL NEW FRP LOUVERS (12 NOS.).
2. FIELD VERIFY ALL DIMENSIONS.
3. ALL PAINTING SHALL CONFORM TO SPECIFICATION SECTION 09901.
4. CONTRACTOR TO CUT SUBMIT SHEETS FOR LOUVERS, INCLUDING ANCHORING DETAILS, FOR THE CITY's REVIEW AND APPROVAL.
5. FRP LOWERS SHALL BE INSTALLED AS RECOMMENDED BY THE MANUFACTURER.

DWG: M-101

AMANI ENGINEERING, INC.
8313 SOUTHWEST FREEWAY
SUITE 350
HOUSTON, TEXAS 77074
TEL: (713) 270-5700
TBPE REG. NO.: F-4528
TBPLS REG. NO.: 100282-00

STATE OF TEXAS
HARI B. PUTCHAKAYALA
104338
REGISTERED PROFESSIONAL ENGINEER
3/15/13

LJA Engineering Inc.
2929 Briarpark Drive
Suite 600
Houston, Texas 77042
Phone 713.953.5200
Fax 713.953.5026
FRN - F-1386

SURVEYED BY: AMANI ENG. | FB NO.: P-5679

CITY OF HOUSTON

DEPARTMENT OF PUBLIC WORKS AND ENGINEERING

ALMEDA SIMS WWTP & SPF IMPROVEMENTS PACKAGE-3

WEST LIFT STATION GROUND LEVEL PLAN

WBS NUMBER	R-000298-0008-4
DRAWING SCALE	AS SHOWN
CITY OF HOUSTON, PM	IRAJ RANJBAR, P.E.
SHEET NO.	12 OF 117

FILE NAME:

ORIGINAL SCALE IN INCHES

V:\Cad\2012\12028 LJA-AlmedaSims\WWTP\CAD DRAWINGS\West Lift Station\M-10: West LS-Fan Room Louvers.dwg

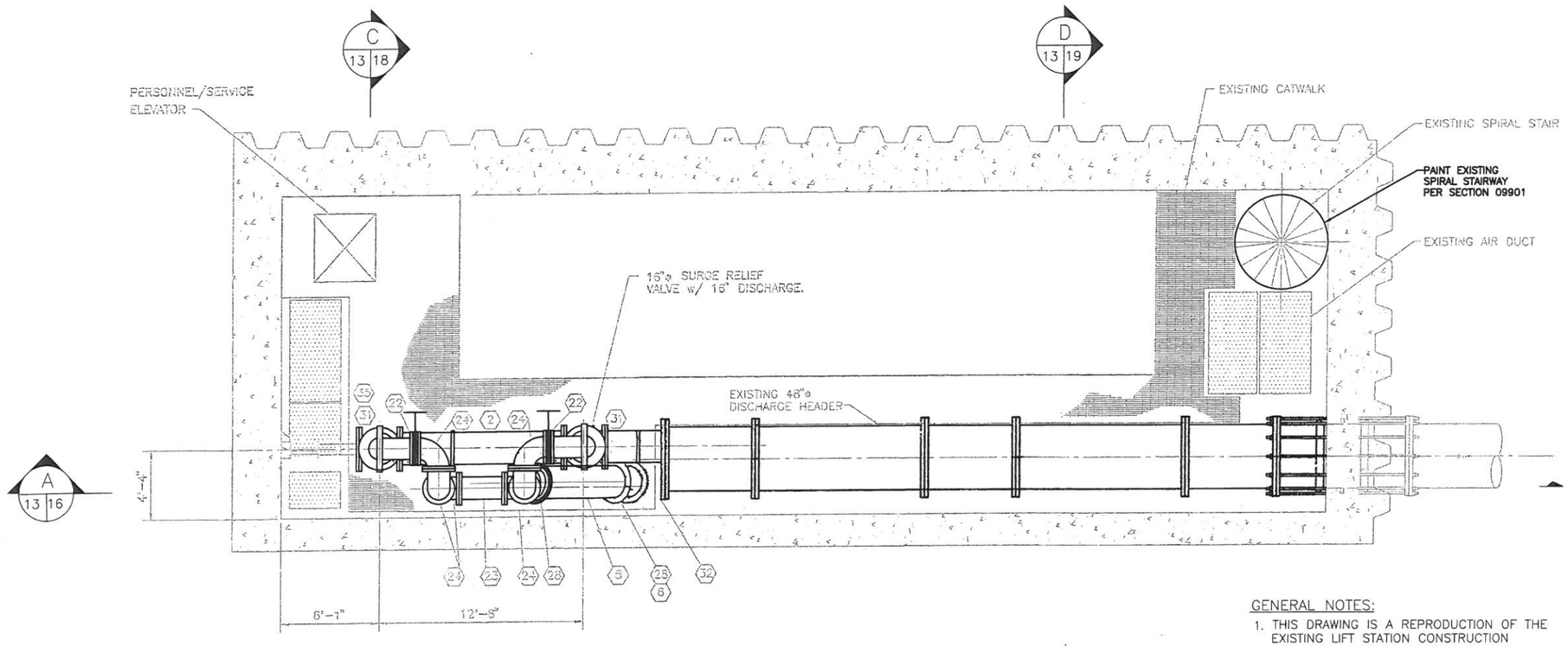

MECHANICAL PLAN AT ELEVATION 53.00

SCALE: ¼" = 1'-0"

PROTECTIVE COATING NOTES:

1. APPLY PROTECTIVE COATING TO FERROUS METALIC PIPING, VALVES, PUMPS, FITTINGS, AND ACCESSORIES WITHIN WET WELL, DRY WELL, MOTOR/PUMP LEVEL (ALL FOUR LEVELS OF WEST LIFT STATION FACILITY) AS SHOWN IN THE CONSTRUCTION DRAWINGS AND/OR DIRECTED BY THE CITY CONFORMING TO SECTION 09901, 2.03.B.
2. SURFACE PREPARATION SHALL CONFORM TO SECTION 09901, 3.03.4
3. FIELD VERIFY ALL DIMENSIONS.

GENERAL NOTES:

1. THIS DRAWING IS A REPRODUCTION OF THE EXISTING LIFT STATION CONSTRUCTION DRAWINGS (RECORD DRAWING NO. P32664, DATED FEBRUARY 1997) AND IS INTENDED TO PROVIDE GENERAL INFORMATION OF THE EQUIPMENT AND ACCESSORIES.
2. CONTRACTOR SHALL DISPOSE OF ANY SLUDGE OR SOLID WASTE IN THE WET WELL. CONTRACTOR SHALL BE RESPONSIBLE FOR TESTING SLUDGE OR SOLID WASTE AND FOR DISPOSAL OF SAME AT A SOLID WASTE DISPOSAL FACILITY IN ACCORDANCE WITH LOCAL STATE AND FEDERAL REGULATIONS AT NO ADDITIONAL COST TO CITY OF HOUSTON.
3. CONTRACTOR SHALL REMOVE SOILS, DEBRIS, SALVAGED MATERIAL AND ITEMS IDENTIFIED TO BE REMOVED IN THE DRAWING AND/OR SPECIFICATION AND DISPOSE OFF OF THE CITY PROPERTY AT STATE APPROVED DISPOSAL FACILITY WITH CONTRACTOR TRUCKS AT NO ADDITIONAL COST TO CITY OF HOUSTON.
4. SEE DRAWING M-105 FOR FITTING SCHEDULE.

AMANI ENGINEERING, INC.
8313 SOUTHWEST FREEWAY
SUITE 350
HOUSTON, TEXAS 77074
TEL: (713) 270-5700
TBPE REG. NO.: F-4528
TBPLS REG. NO.: 100282-00

STATE OF TEXAS
HARI B. PUTCHAKAYALA
104338
REGISTERED PROFESSIONAL ENGINEER
Hari B. Putchakayala 3/15/13

LJA Engineering Inc.
2929 Briarpark Drive
Suite 600
Houston, Texas 77042
Phone 713.953.5200
Fax 713.953.5026
FRN - F-1386

SURVEYED BY: AMANI ENG. | FB NO.: P-5679

CITY OF HOUSTON
DEPARTMENT OF PUBLIC WORKS AND ENGINEERING

ALMEDA SIMS WWTP & SPF IMPROVEMENTS PACKAGE-3

WEST LIFT STATION MECHANICAL PLAN AT ELEVATION 53.00

WBS NUMBER	
R-000298-0008-4	
DRAWING SCALE	
¼" = 1'-0"	
CITY OF HOUSTON, PM	
IRAJ RANJBAR, P.E.	
SHEET NO. 13 OF 117	

PUBLIC WORKS & ENGINEERING
30451
CITY SECRETARY
HOUSTON, TEXAS

DWG: M-102

FILE NAME:

ORIGINAL SCALE IN INCHES
FOR REDUCED PLANS

V:\Coad\2012\12028 LJA-AlmedaSimsWWTP\CAD DRAWINGS\West Lift Station\M-102 West LS- Mechanical Plan 1.dwg

17

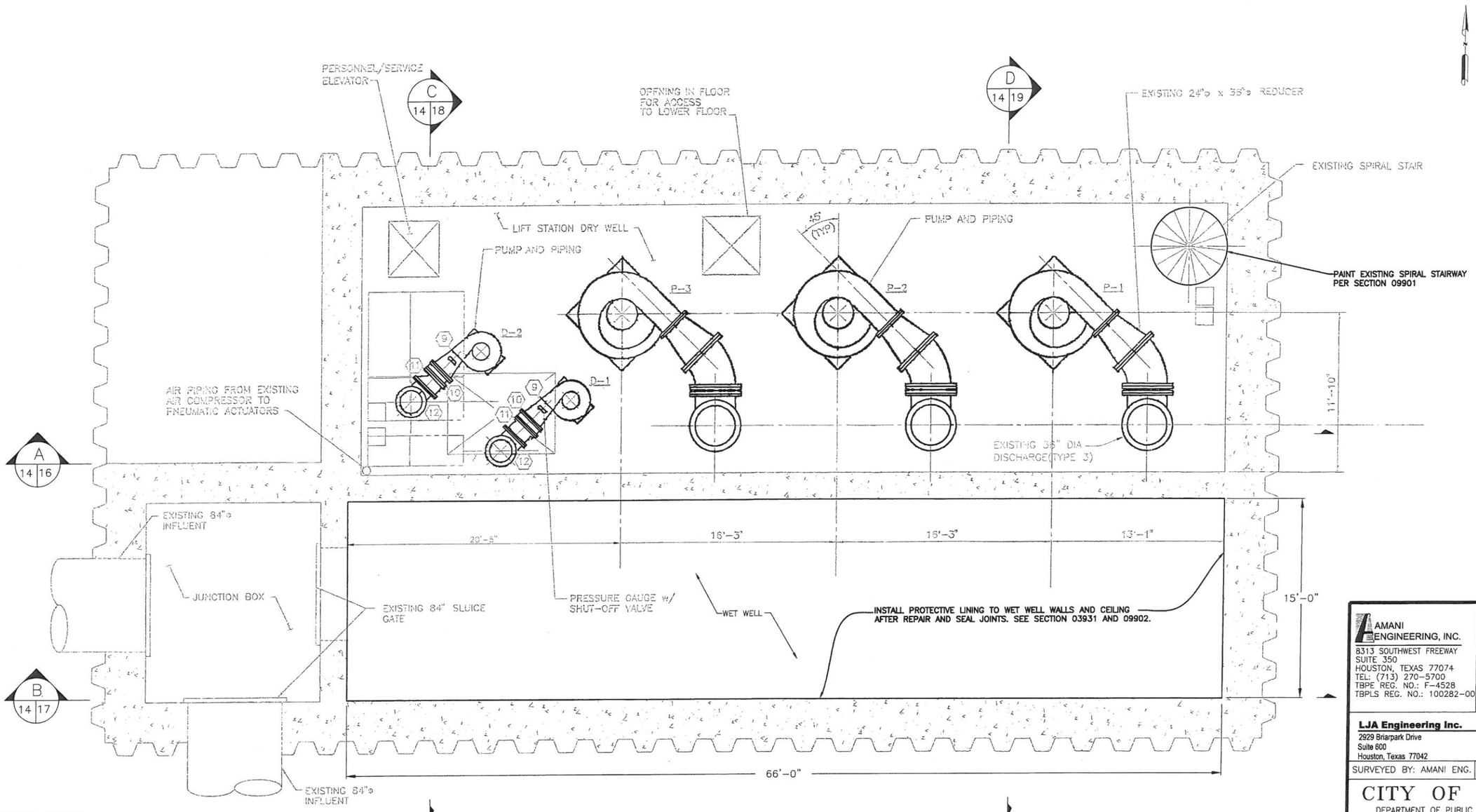

MECHANICAL PLAN AT ELEVATION 7.16

SCALE: ¼" = 1'-0"

GENERAL NOTES:

1. THIS DRAWING IS A REPRODUCTION OF THE EXISTING LIFT STATION CONSTRUCTION DRAWINGS (RECORD DRAWING NO. P32664, DATED FEBRUARY 1997) AND IS INTENDED TO PROVIDE GENERAL INFORMATION OF THE EQUIPMENT AND ACCESSORIES.
2. CONTRACTOR SHALL DISPOSE OF ANY SLUDGE OR SOLID WASTE IN THE WET WELL. CONTRACTOR SHALL BE RESPONSIBLE FOR TESTING SLUDGE OR SOLID WASTE AND FOR DISPOSAL OF SAME AT A SOLID WASTE DISPOSAL FACILITY IN ACCORDANCE WITH LOCAL STATE AND FEDERAL REGULATIONS AT NO ADDITIONAL COST TO CITY OF HOUSTON.
3. CONTRACTOR SHALL REMOVE SOILS, DEBRIS, SALVAGED MATERIAL AND ITEMS IDENTIFIED TO BE REMOVED IN THE DRAWING AND/OR SPECIFICATION AND DISPOSE OFF OF THE CITY PROPERTY AT STATE APPROVED DISPOSAL FACILITY WITH CONTRACTOR TRUCKS AT NO ADDITIONAL COST TO CITY OF HOUSTON.
4. SEE DRAWING M-105 FOR FITTING SCHEDULE.

PROTECTIVE COATING NOTES:

1. APPLY PROTECTIVE COATING TO FERROUS METALIC PIPING, VALVES, PUMPS, FITTINGS, AND ACCESSORIES WITHIN WET WELL, DRY WELL, MOTOR/PUMP LEVEL (ALL FOUR LEVELS OF WEST LIFT STATION FACILITY) AS SHOWN IN THE CONSTRUCTION DRAWINGS AND/OR DIRECTED BY THE CITY CONFORMING TO SECTION 09901, 2.03.B.
2. SURFACE PREPARATION SHALL CONFORM TO SECTION 09901, 3.03.4
3. FIELD VERIFY ALL DIMENSIONS.

AMANI ENGINEERING, INC.
8313 SOUTHWEST FREEWAY
SUITE 350
HOUSTON, TEXAS 77074
TEL: (713) 270-5700
TBPE REG. NO.: F-4528
TBPLS REG. NO.: 100282-00

STATE OF TEXAS
HARI B. PUTCHAKAYALA
104338
REGISTERED PROFESSIONAL ENGINEER
3/15/13

LJA Engineering Inc.
2929 Briarpark Drive
Suite 600
Houston, Texas 77042
Phone 713.953.5200
Fax 713.953.5026
FRN - F-1386

SURVEYED BY: AMANI ENG. | FB NO.: P-5679

CITY OF HOUSTON
DEPARTMENT OF PUBLIC WORKS AND ENGINEERING

ALMEDA SIMS WWTP & SPF IMPROVEMENTS PACKAGE-3

WEST LIFT STATION MECHANICAL PLAN AT ELEVATION 7.16

WBS NUMBER	R-000298-0008-4
DRAWING SCALE	AS SHOWN
CITY OF HOUSTON, PM	IRAJ RANJBAR, P.E.
SHEET NO.	14 OF 117

DWG: M-103

PROFESSIONAL ENGINEER 80431 STATE OF TEXAS HOUSTON, TEXAS

ORIGINAL SCALE IN INCHES

FILE NAME:

V:\Code\2012\120128 LJA-AlmedaSims\WWTP\CAD DRAWINGS\West Lift Station\M-103 West LS-Mechanical Plan 2.dwg

19

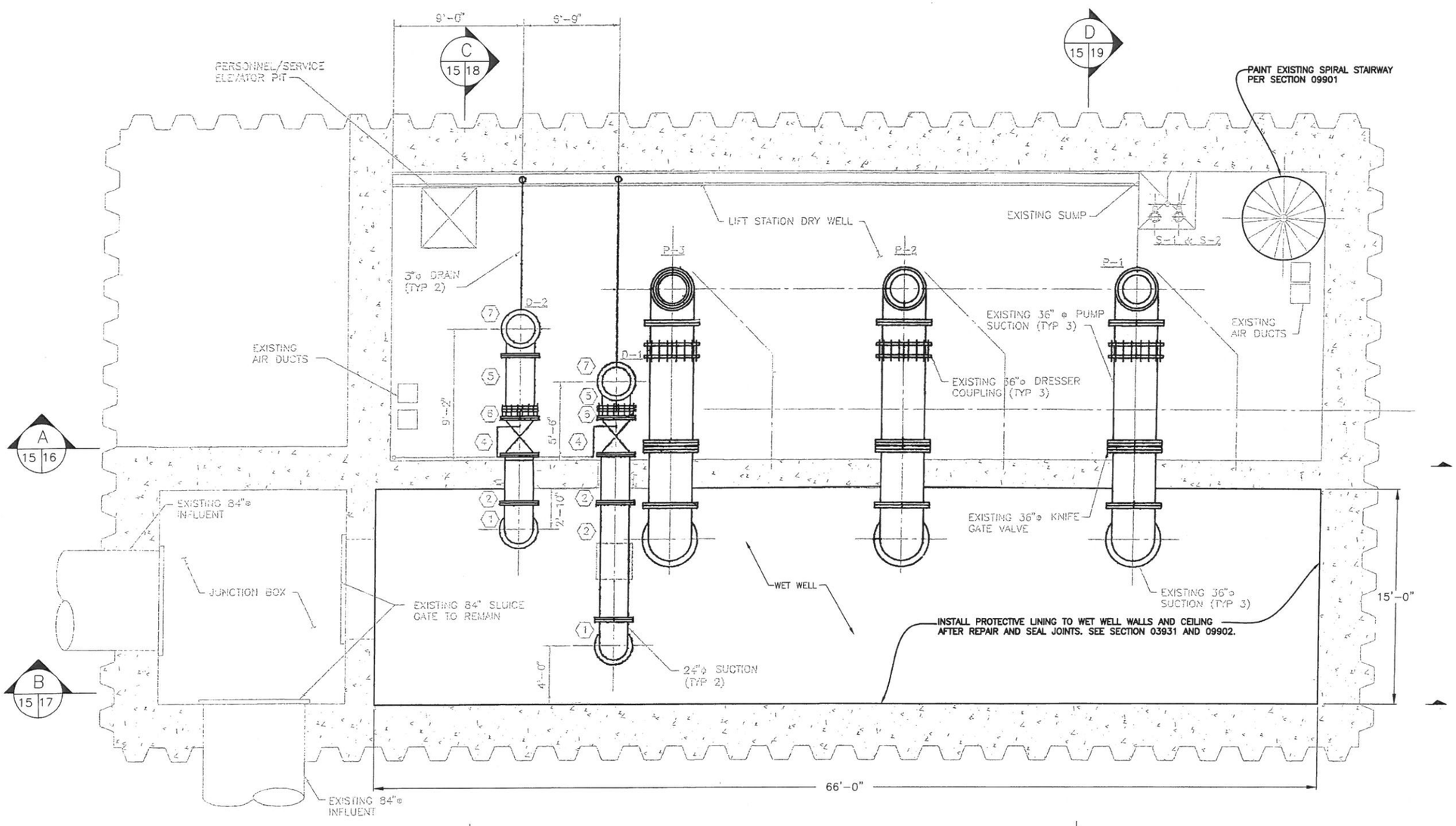

MECHANICAL PLAN AT ELEVATION −2.00

SCALE: ¼" = 1'-0"

GENERAL NOTES:

1. THIS DRAWING IS A REPRODUCTION OF THE EXISTING LIFT STATION CONSTRUCTION DRAWINGS (RECORD DRAWING NO. P32664, DATED FEBRUARY 1997) AND IS INTENDED TO PROVIDE GENERAL INFORMATION OF THE EQUIPMENT AND ACCESSORIES.
2. CONTRACTOR SHALL DISPOSE OF ANY SLUDGE OR SOLID WASTE IN THE WET WELL. CONTRACTOR SHALL BE RESPONSIBLE FOR TESTING SLUDGE OR SOLID WASTE AND FOR DISPOSAL OF SAME AT A SOLID WASTE DISPOSAL FACILITY IN ACCORDANCE WITH LOCAL STATE AND FEDERAL REGULATIONS AT NO ADDITIONAL COST TO CITY OF HOUSTON.
3. CONTRACTOR SHALL REMOVE SOILS, DEBRIS, SALVAGED MATERIAL AND ITEMS IDENTIFIED TO BE REMOVED IN THE DRAWING AND/OR SPECIFICATION AND DISPOSE OFF OF THE CITY PROPERTY AT STATE APPROVED DISPOSAL FACILITY WITH CONTRACTOR TRUCKS AT NO ADDITIONAL COST TO CITY OF HOUSTON.
4. SEE DRAWING M−105 FOR FITTING SCHEDULE.

PROTECTIVE COATING NOTES:

1. APPLY PROTECTIVE COATING TO FERROUS METALIC PIPING, VALVES, PUMPS, FITTINGS, AND ACCESSORIES WITHIN WET WELL, DRY WELL, MOTOR/PUMP LEVEL (ALL FOUR LEVELS OF WEST LIFT STATION FACILITY) AS SHOWN IN THE CONSTRUCTION DRAWINGS AND/OR DIRECTED BY THE CITY CONFORMING TO SECTION 09901, 2.03.B.
2. SURFACE PREPARATION SHALL CONFORM TO SECTION 09901, 3.03.4
3. FIELD VERIFY ALL DIMENSIONS.

AMANI ENGINEERING, INC.
8313 SOUTHWEST FREEWAY
SUITE 350
HOUSTON, TEXAS 77074
TEL: (713) 270-5700
TBPE REG. NO.: F-4528
TBPLS REG. NO.: 100282-00

HARI B. PUTCHAYAYLA
104338
REGISTERED PROFESSIONAL ENGINEER
3/15/13

LJA Engineering Inc.
2929 Briarpark Drive
Suite 600
Houston, Texas 77042
Phone 713.953.5200
Fax 713.953.5026
FRN - F-1386

SURVEYED BY: AMANI ENG. | FB NO.: P-5679

CITY OF HOUSTON
DEPARTMENT OF PUBLIC WORKS AND ENGINEERING

ALMEDA SIMS WWTP & SPF IMPROVEMENTS PACKAGE−3

WEST LIFT STATION MECHANICAL PLAN AT ELEVATION −2.00

WBS NUMBER	R-000298-0008-4
DRAWING SCALE	AS SHOWN
CITY OF HOUSTON, PM	IRAJ RANJBAR, P.E.
SHEET NO.	15 OF 117

DWG: M−104

ORIGINAL SCALE IN INCHES

FILE NAME: V:\Cadd\2012\12028 LJA-AlmedaSims\WWTP\CAD DRAWINGS\West Lift Station\M-104 West LS- Mechonical Plan 3.dwg

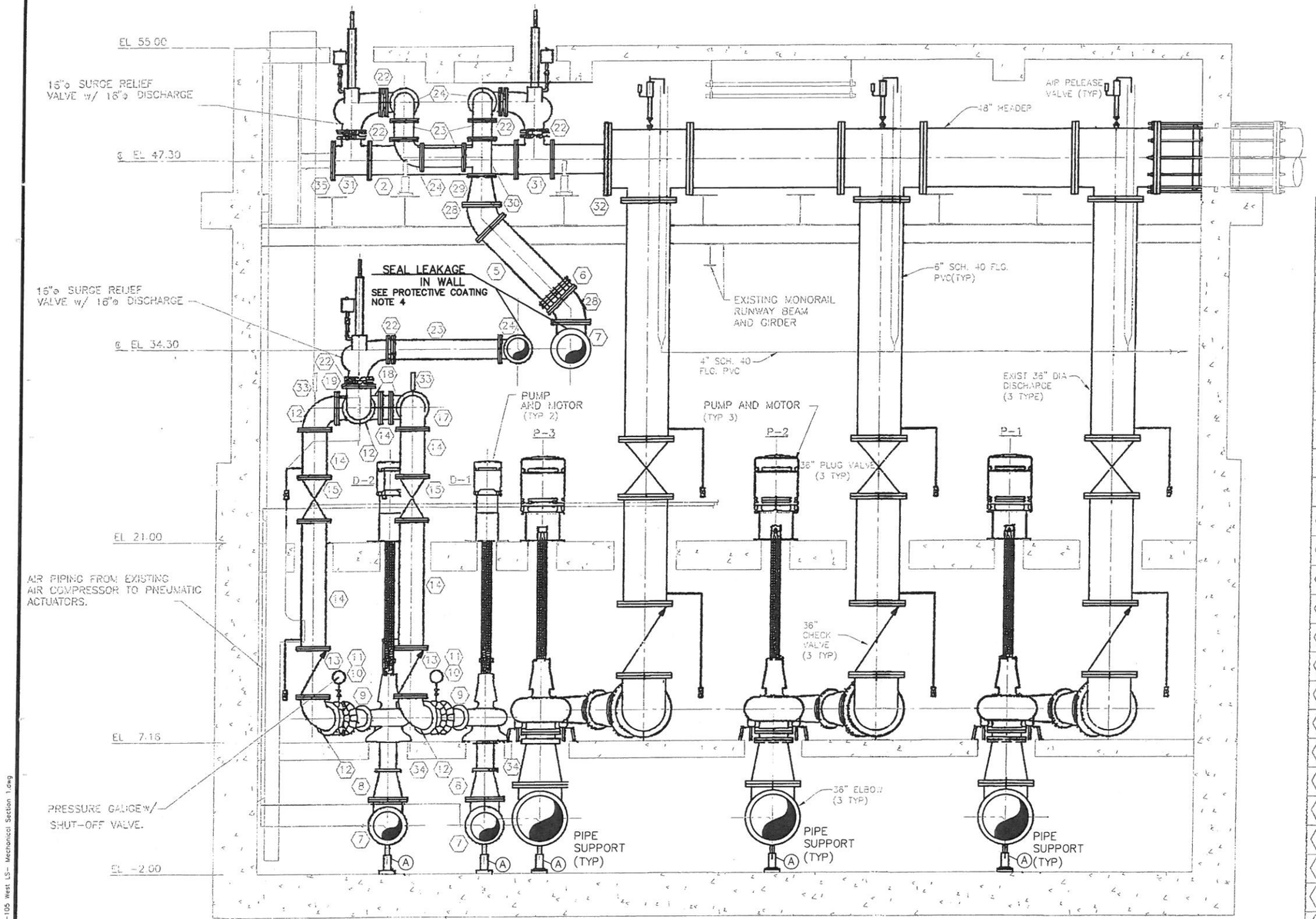

FITTING SCHEDULE		FITTING SCHEDULE	
TAG	DESCRIPTION	TAG	DESCRIPTION
1	24"ø 90° FLARE BEND, DI	28	24"ø 45° BEND, DI
2	24"ø SPOOL PIECE, DI	29	24"ø x 16"ø ECCENTRIC REDUCER, DI
3	3"ø TAP w/ 3" GATE VALVE	30	16"ø x 16"ø x 16"ø TEE, DI
4	24"ø ECCENTRIC PLUG VALVE	31	24"ø x 24"ø x 16"ø TEE, DI.
5	24"ø SPOOL PIECE, DI	32	48"ø BLIND FLANGE, STL, w/ WELDED ON 24"ø SPOOL w/ FLANGE
6	24"ø FLANGED ADAPTOR COUPLING	33	2" AIR/VACUUM VALVE, NPT
7	24"ø SR 90° BEND, DI	34	14"ø SPOOL PIECE, DI
8	24"ø x 14"ø REDUCER, DI	35	24"ø BLIND FLANGE, STL
9	20"ø x 14"ø REDUCER, DI		
10	20"ø FLANGED ADAPTOR COUPLING		
11	20"ø SPOOL PIECE, DI		
12	20"ø SR 90° BEND, DI		
13	20"ø SWING CHECK VALVE		
14	20"ø SPOOL PIECE, DI		
15	20"ø ECCENTRIC PLUG VALVE		
16	30"ø x 20"ø REDUCER, DI		
17	20"ø SR 90° FLANGED BASE BEND		
18	20"ø x 20"ø x 20"ø TEE		
19	20"ø x 16"ø REDUCER FLANGE		
20	16"ø SPOOL PIECE, DI		
21	16"ø FLANGED ADAPTOR COUPLING		
22	16"ø KNIFE GATE VALVE W/HANDWHEEL DI, FLG, FLG		
23	16"ø SPOOL PIECE, DI		
24	16"ø SR 90° BEND DI		
25	16"ø 45° BEND, DI		
26	24"ø x 24"ø x 16"ø WYE, DI		
27	30"ø SPOOL PIECE, DI		

A SECTION
13 | 16 SCALE: 1/4"=1'-0"

Ⓐ REMOVE AND DISPOSE OF EXISTING PIPE SUPPORTS AND INSTALL NEW ADJUSTABLE PIPE SUPPORTS. SEE DETAIL IN SHEET M-108.

GENERAL NOTES:

1. THIS DRAWING IS A REPRODUCTION OF THE EXISTING LIFT STATION CONSTRUCTION DRAWINGS (RECORD DRAWING NO. P32664, DATED FEBRUARY 1997) AND IS INTENDED TO PROVIDE GENERAL INFORMATION OF THE EQUIPMENT AND ACCESSORIES.
2. CONTRACTOR SHALL DISPOSE OF ANY SLUDGE OR SOLID WASTE IN THE WET WELL. CONTRACTOR SHALL BE RESPONSIBLE FOR TESTING SLUDGE OR SOLID WASTE AND FOR DISPOSAL OF SAME AT A SOLID WASTE DISPOSAL FACILITY IN ACCORDANCE WITH LOCAL STATE AND FEDERAL REGULATIONS AT NO ADDITIONAL COST TO CITY OF HOUSTON.
3. CONTRACTOR SHALL REMOVE SOILS, DEBRIS, SALVAGED MATERIAL AND ITEMS IDENTIFIED TO BE REMOVED IN THE DRAWING AND/OR SPECIFICATION AND DISPOSE OFF OF THE CITY PROPERTY AT STATE APPROVED DISPOSAL FACILITY WITH CONTRACTOR TRUCKS AT NO ADDITIONAL COST TO CITY OF HOUSTON.

PROTECTIVE COATING NOTES:

1. APPLY PROTECTIVE COATING TO FERROUS METALIC PIPING, VALVES, PUMPS, FITTINGS, AND ACCESSORIES WITHIN WET WELL, DRY WELL, MOTOR/PUMP LEVEL (ALL FOUR LEVELS OF WEST LIFT STATION FACILITY) AS SHOWN IN THE CONSTRUCTION DRAWINGS AND/OR DIRECTED BY THE CITY CONFORMING TO SECTION 09901, 2.03.B.
2. SURFACE PREPARATION SHALL CONFORM TO SECTION 09901, 3.03.4.
3. FIELD VERIFY ALL DIMENSIONS.
4. SEAL LEAKAGE BY INJECTING GROUTING COMPOUND CONSISTING OF PREPOLYMER URETHANE RESIN AT THE LOCATIONS SHOWN IN THE DRAWINGS AND/OR AS DIRECTED BY THE CITY. REPAIR CONCRETE SURFACES CONFORMING TO SECTION 03931.

DWG: M-105

AMANI ENGINEERING, INC.
8313 SOUTHWEST FREEWAY
SUITE 350
HOUSTON, TEXAS 77074
TEL: (713) 270-5700
TBPE REG. NO.: F-4528
TBPLS REG. NO.: 100282-00

STATE OF TEXAS HARI B. PUTCHAKAYALA 104338 REGISTERED PROFESSIONAL ENGINEER
3/15/13

LJA Engineering Inc.
2929 Briarpark Drive
Suite 600
Houston, Texas 77042
Phone 713.953.5200
Fax 713.953.5026
FRN - F-1386

SURVEYED BY: AMANI ENG. FB NO.: P-5679

CITY OF HOUSTON
DEPARTMENT OF PUBLIC WORKS AND ENGINEERING

ALMEDA SIMS WWTP & SPF IMPROVEMENTS PACKAGE-3

WEST LIFT STATION MECHANICAL SECTION (SHEET 1 OF 4)

WBS NUMBER	R-000298-0008-4
DRAWING SCALE	AS SHOWN
CITY OF HOUSTON, PM	IRAJ RANJBAR, P.E.
SHEET NO.	16 OF 117

REGISTERED ENGINEERING 50431 CITY HOUSTON, TEXAS

ORIGINAL SCALE IN INCHES FOR REDUCED PLANS
0 1 2 3

FILE NAME:

V:\Code\2012\2028 LJA-AlmedaSimsWWTP\CAD DRAWINGS\West Lift Station\M-105 West LS- Mechanical Section 1.dwg

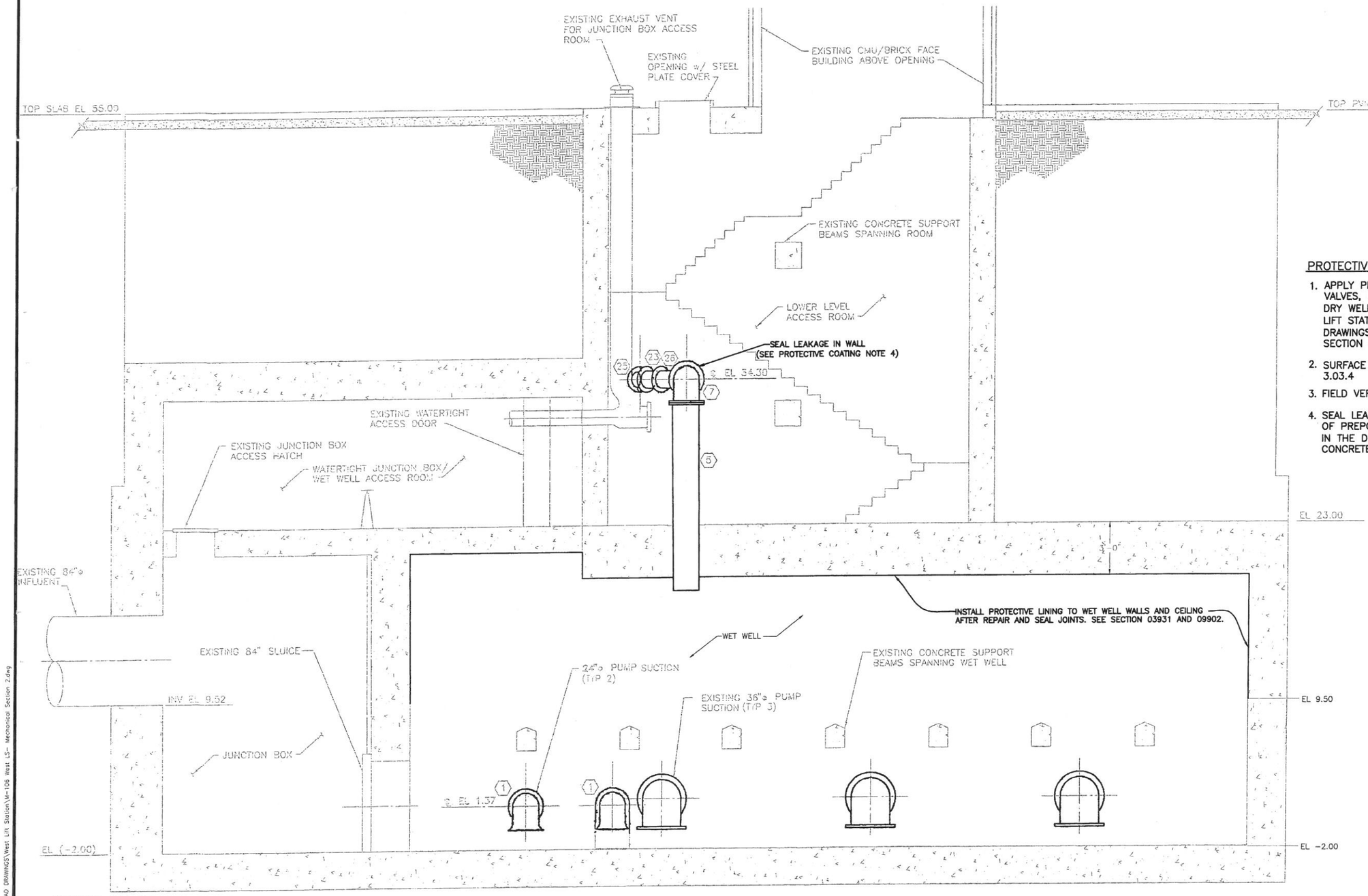

PROTECTIVE COATING NOTES:

1. APPLY PROTECTIVE COATING TO FERROUS METALIC PIPING, VALVES, PUMPS, FITTINGS, AND ACCESSORIES WITHIN WET WELL, DRY WELL, MOTOR/PUMP LEVEL (ALL FOUR LEVELS OF WEST LIFT STATION FACILITY) AS SHOWN IN THE CONSTRUCTION DRAWINGS AND/OR DIRECTED BY THE CITY CONFORMING TO SECTION 09901, 2.03.B.
2. SURFACE PREPARATION SHALL CONFORM TO SECTION 09901, 3.03.4
3. FIELD VERIFY ALL DIMENSIONS.
4. SEAL LEAKAGE BY INJECTING GROUTING COMPOUND CONSISTING OF PREPOLYMER URETHANE RESIN AT THE LOCATIONS SHOWN IN THE DRAWINGS AND/OR AS DIRECTED BY THE CITY. REPAIR CONCRETE SURFACES CONFORMING TO SECTION 03931.

GENERAL NOTES:

1. THIS DRAWING IS A REPRODUCTION OF THE EXISTING LIFT STATION CONSTRUCTION DRAWINGS (RECORD DRAWING NO. P32664, DATED FEBRUARY 1997) AND IS INTENDED TO PROVIDE GENERAL INFORMATION OF THE EQUIPMENT AND ACCESSORIES.
2. CONTRACTOR SHALL DISPOSE OF ANY SLUDGE OR SOLID WASTE IN THE WET WELL. CONTRACTOR SHALL BE RESPONSIBLE FOR TESTING SLUDGE OR SOLID WASTE AND FOR DISPOSAL OF SAME AT A SOLID WASTE DISPOSAL FACILITY IN ACCORDANCE WITH LOCAL STATE AND FEDERAL REGULATIONS AT NO ADDITIONAL COST TO CITY OF HOUSTON.
3. CONTRACTOR SHALL REMOVE SOILS, DEBRIS, SALVAGED MATERIAL AND ITEMS IDENTIFIED TO BE REMOVED IN THE DRAWING AND/OR SPECIFICATION AND DISPOSE OFF OF THE CITY PROPERTY AT STATE APPROVED DISPOSAL FACILITY WITH CONTRACTOR TRUCKS AT NO ADDITIONAL COST TO CITY OF HOUSTON.
4. SEE DRAWING M-105 FOR FITTING SCHEDULE.

B / 14 17 SECTION
SCALE: 1/4"=1'-0"

ORIGINAL SCALE IN INCHES
FOR REDUCED PLANS

V:\Cadd\2012\2028 LJA-AlmedaSimsWWTP\CAD DRAWINGS\West Lift Station\M-106 West LS- Mechanical Section 2.dwg

AMANI ENGINEERING, INC.
8313 SOUTHWEST FREEWAY
SUITE 350
HOUSTON, TEXAS 77074
TEL: (713) 270-5700
TBPE REG. NO.: F-4528
TBPLS REG. NO.: 100282-00

STATE OF TEXAS
HARI B. PUTCHAKAYALA
104338
REGISTERED PROFESSIONAL ENGINEER
3/15/13

LJA Engineering Inc.
2929 Briarpark Drive
Suite 600
Houston, Texas 77042
Phone 713.953.5200
Fax 713.953.5026
FRN - F-1386

SURVEYED BY: AMANI ENG. | FB NO.: P-5679

CITY OF HOUSTON
DEPARTMENT OF PUBLIC WORKS AND ENGINEERING

ALMEDA SIMS WWTP & SPF IMPROVEMENTS PACKAGE-3

WEST LIFT STATION MECHANICAL SECTION (SHEET 2 OF 4)

WBS NUMBER	R-000298-0008-4
DRAWING SCALE	AS SHOWN
CITY OF HOUSTON, PM	IRAJ RANJBAR, P.E.
SHEET NO. 17 OF 117	

DWG: M-106

50431 REGISTERED PROFESSIONAL ENGINEER HOUSTON, TEXAS

FILE NAME:

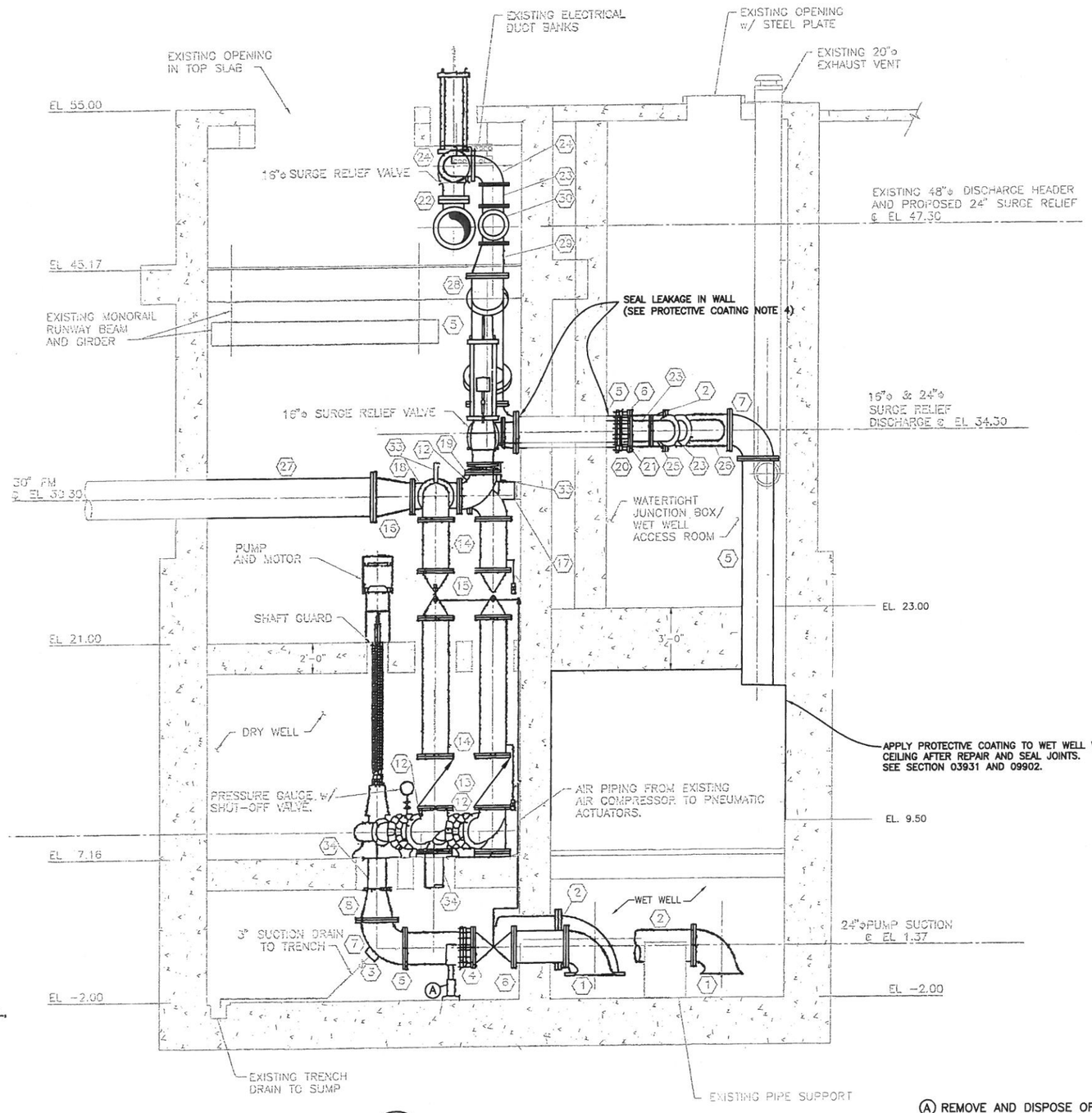

C SECTION
14 | 18 SCALE: 1/4"=1'-0"

Ⓐ REMOVE AND DISPOSE OF EXISTING PIPE SUPPORTS AND INSTALL NEW ADJUSTABLE PIPE SUPPORTS. SEE DETAIL IN SHEET M-108

GENERAL NOTES:

1. THIS DRAWING IS A REPRODUCTION OF THE EXISTING LIFT STATION CONSTRUCTION DRAWINGS (RECORD DRAWING NO. P32664, DATED FEBRUARY 1997) AND IS INTENDED TO PROVIDE GENERAL INFORMATION OF THE EQUIPMENT AND ACCESSORIES.
2. CONTRACTOR SHALL DISPOSE OF ANY SLUDGE OR SOLID WASTE IN THE WET WELL. CONTRACTOR SHALL BE RESPONSIBLE FOR TESTING SLUDGE OR SOLID WASTE AND FOR DISPOSAL OF SAME AT A SOLID WASTE DISPOSAL FACILITY IN ACCORDANCE WITH LOCAL STATE AND FEDERAL REGULATIONS AT NO ADDITIONAL COST TO CITY OF HOUSTON.
3. CONTRACTOR SHALL REMOVE SOILS, DEBRIS, SALVAGED MATERIAL AND ITEMS IDENTIFIED TO BE REMOVED IN THE DRAWING AND/OR SPECIFICATION AND DISPOSE OFF OF THE CITY PROPERTY AT STATE APPROVED DISPOSAL FACILITY WITH CONTRACTOR TRUCKS AT NO ADDITIONAL COST TO CITY OF HOUSTON.
4. SEE DRAWING M-105 FOR FITTING SCHEDULE.

PROTECTIVE COATING NOTES:

1. APPLY PROTECTIVE COATING TO FERROUS METALIC PIPING, VALVES, PUMPS, FITTINGS, AND ACCESSORIES WITHIN WET WELL, DRY WELL, MOTOR/PUMP LEVEL (ALL FOUR LEVELS OF WEST LIFT STATION FACILITY) AS SHOWN IN THE CONSTRUCTION DRAWINGS AND/OR DIRECTED BY THE CITY CONFORMING TO SECTION 09901, 2.03.B.
2. SURFACE PREPARATION SHALL CONFORM TO SECTION 09901, 3.03.4
3. FIELD VERIFY ALL DIMENSIONS.
4. SEAL LEAKAGE BY INJECTING GROUTING COMPOUND CONSISTING OF PREPOLYMER URETHANE RESIN AT THE LOCATIONS SHOWN IN THE DRAWINGS AND/OR AS DIRECTED BY THE CITY. REPAIR CONCRETE SURFACES CONFORMING TO SECTION 03931.

AMANI ENGINEERING, INC.
8313 SOUTHWEST FREEWAY
SUITE 350
HOUSTON, TEXAS 77074
TEL: (713) 270-5700
TBPE REG. NO.: F-4528
TBPLS REG. NO.: 100282-00

STATE OF TEXAS
HARI B. PUTCHAKAYALA
104338
REGISTERED PROFESSIONAL ENGINEER
5/15/13

LJA Engineering Inc.
2929 Briarpark Drive
Suite 600
Houston, Texas 77042
Phone 713.953.5200
Fax 713.953.5026
FRN - F-1386

SURVEYED BY: AMANI ENG. | FB NO.: P-5679

CITY OF HOUSTON
DEPARTMENT OF PUBLIC WORKS AND ENGINEERING

ALMEDA SIMS WWTP & SPF IMPROVEMENTS PACKAGE-3

WEST LIFT STATION MECHANICAL SECTION (SHEET 3 OF 4)

WBS NUMBER	R-000298-0008-4
DRAWING SCALE	AS SHOWN
CITY OF HOUSTON, PM	IRAJ RANJBAR, P.E.
SHEET NO.	18 OF 117

DWG: M-107

FILE NAME: V:\Cad\2012\12028 LJA-AlmedaSimsWWTP\CAD DRAWINGS\West Lift Station\M-107 West LS- Mechanical Section 3.dwg

ORIGINAL SCALE IN INCHES

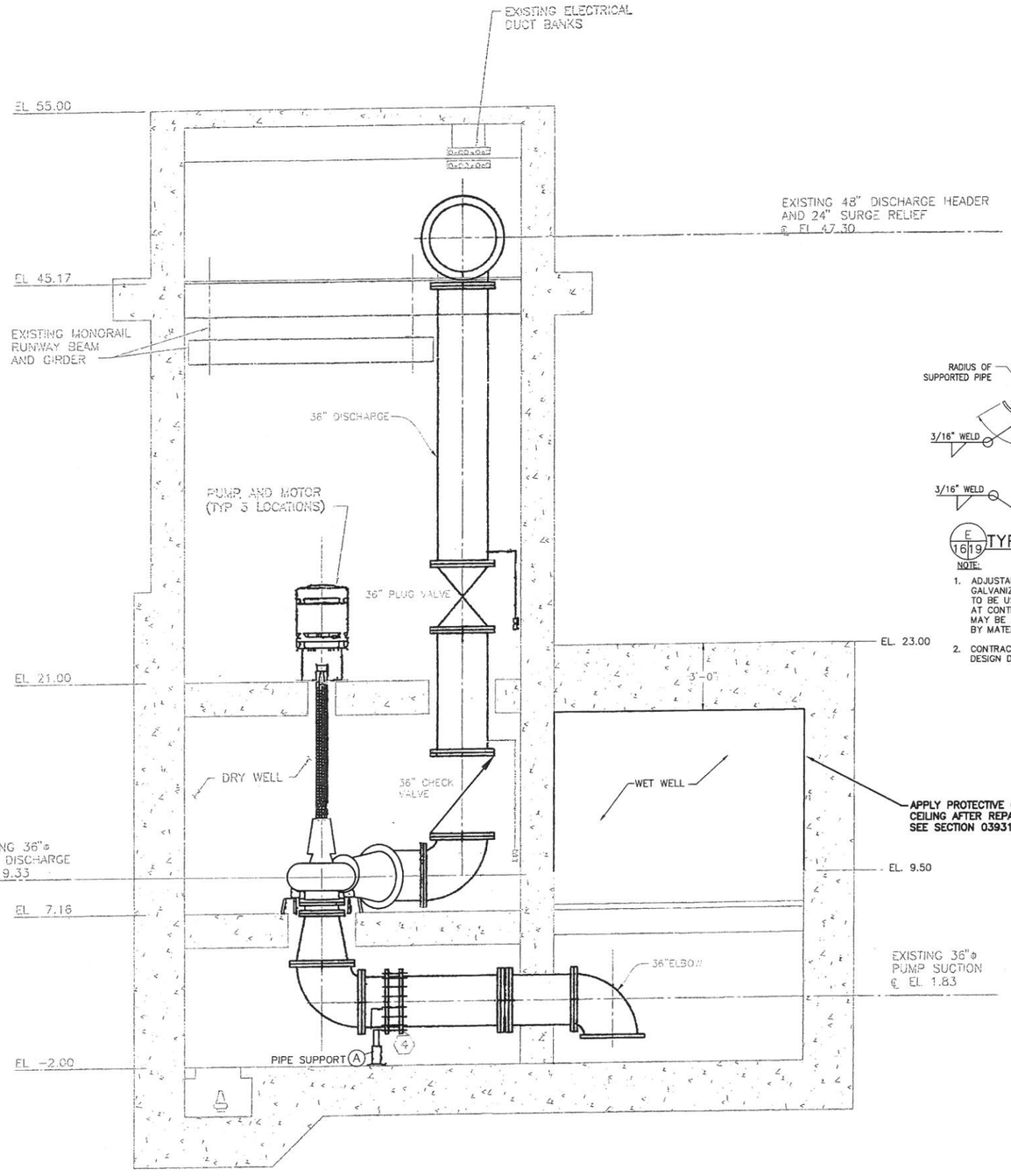

D / 14 19 SECTION
SCALE: 1/4"=1'-0"

(A) REMOVE AND DISPOSE OFF EXISTING PIPE SUPPORTS AND INSTALL NEW ADJUSTABLE PIPE SUPPORTS. SEE DETAIL IN THIS SHEET

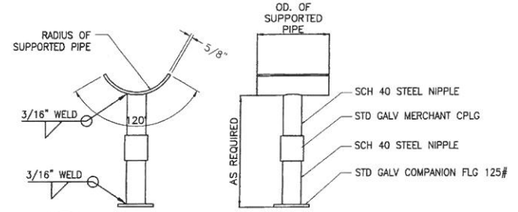

E / 16 19 TYP ADJUSTABLE PIPE SUPPORT
(SCALE: NTS)

NOTE:

1. ADJUSTABLE PIPE SUPPORT ASSEMBLY TO BE HOT DIPPED GALVANIZED AFTER FABRICATION. COLD GALVANIZED COMPOUND TO BE USED AS TOUCH UP AFTER INSTALLATION. AT CONTRACTOR OPTION, THE ADJUSTABLE PIPE SUPPORT MAY BE AN EQUAL PURCHASED PRODUCT AS MANUFACTURED BY MATERIAL RESOURCES, ANVIL, OR OTHER MFG.
2. CONTRACTOR TO PROVIDE CONC. ANCHOR BOLT PATTERN AND DESIGN DURING SHOP DRAWING SUBMISSION.

PROTECTIVE COATING NOTES:

1. APPLY PROTECTIVE COATING TO FERROUS METALIC PIPING, VALVES, PUMPS, FITTINGS, AND ACCESSORIES WITHIN WET WELL, DRY WELL, MOTOR/PUMP LEVEL (ALL FOUR LEVELS OF WEST LIFT STATION FACILITY) AS SHOWN IN THE CONSTRUCTION DRAWINGS AND/OR DIRECTED BY THE CITY CONFORMING TO SECTION 09901, 2.03.B.
2. SURFACE PREPARATION SHALL CONFORM TO SECTION 09901, 3.03.4
3. FIELD VERIFY ALL DIMENSIONS.
4. SEAL LEAKAGE BY INJECTING GROUTING COMPOUND CONSISTING OF PREPOLYMER URETHANE RESIN AT THE LOCATIONS SHOWN IN THE DRAWINGS AND/OR AS DIRECTED BY THE CITY. REPAIR CONCRETE SURFACES CONFORMING TO SECTION 03931.

GENERAL NOTES:

1. THIS DRAWING IS A REPRODUCTION OF THE EXISTING LIFT STATION CONSTRUCTION DRAWINGS (RECORD DRAWING NO. P32664, DATED FEBRUARY 1997) AND IS INTENDED TO PROVIDE GENERAL INFORMATION OF THE EQUIPMENT AND ACCESSORIES.
2. CONTRACTOR SHALL DISPOSE OF ANY SLUDGE OR SOLID WASTE IN THE WET WELL. CONTRACTOR SHALL BE RESPONSIBLE FOR TESTING SLUDGE OR SOLID WASTE AND FOR DISPOSAL OF SAME AT A SOLID WASTE DISPOSAL FACILITY IN ACCORDANCE WITH LOCAL STATE AND FEDERAL REGULATIONS AT NO ADDITIONAL COST TO CITY OF HOUSTON.
3. CONTRACTOR SHALL REMOVE SOILS, DEBRIS, SALVAGED MATERIAL AND ITEMS IDENTIFIED TO BE REMOVED IN THE DRAWING AND/OR SPECIFICATION AND DISPOSE OFF OF THE CITY PROPERTY AT STATE APPROVED DISPOSAL FACILITY WITH CONTRACTOR TRUCKS AT NO ADDITIONAL COST TO CITY OF HOUSTON.
4. SEE DRAWING M-105 FOR FITTING SCHEDULE.

AMANI ENGINEERING, INC.
8313 SOUTHWEST FREEWAY
SUITE 350
HOUSTON, TEXAS 77074
TEL: (713) 270-5700
TBPE REG. NO.: F-4528
TBPLS REG. NO.: 100282-00

STATE OF TEXAS
HARI B. PUTCHAKAYALA
104338
REGISTERED PROFESSIONAL ENGINEER
3/15/13

LJA Engineering Inc.
2929 Briarpark Drive
Suite 600
Houston, Texas 77042
Phone 713.953.5200
Fax 713.953.5026
FRN - F-1386

SURVEYED BY: AMANI ENG. | FB NO.: P-5679

CITY OF HOUSTON
DEPARTMENT OF PUBLIC WORKS AND ENGINEERING

ALMEDA SIMS WWTP & SPF IMPROVEMENTS PACKAGE-3

WEST LIFT STATION MECHANICAL SECTION (SHEET 4 OF 4)

WBS NUMBER	R-000298-0008-4
DRAWING SCALE	AS SHOWN
CITY OF HOUSTON, PM	IRAJ RANJBAR, P.E.
SHEET NO. 19 OF 117	

DWG: M-108

FILE NAME:

ORIGINAL SCALE IN INCHES

W:\Cadd\2012\12028 LJA-AlmedaSimsWWTP\CAD DRAWINGS\West Lift Station\M-108 West LS- Mechanical Section 4.dwg

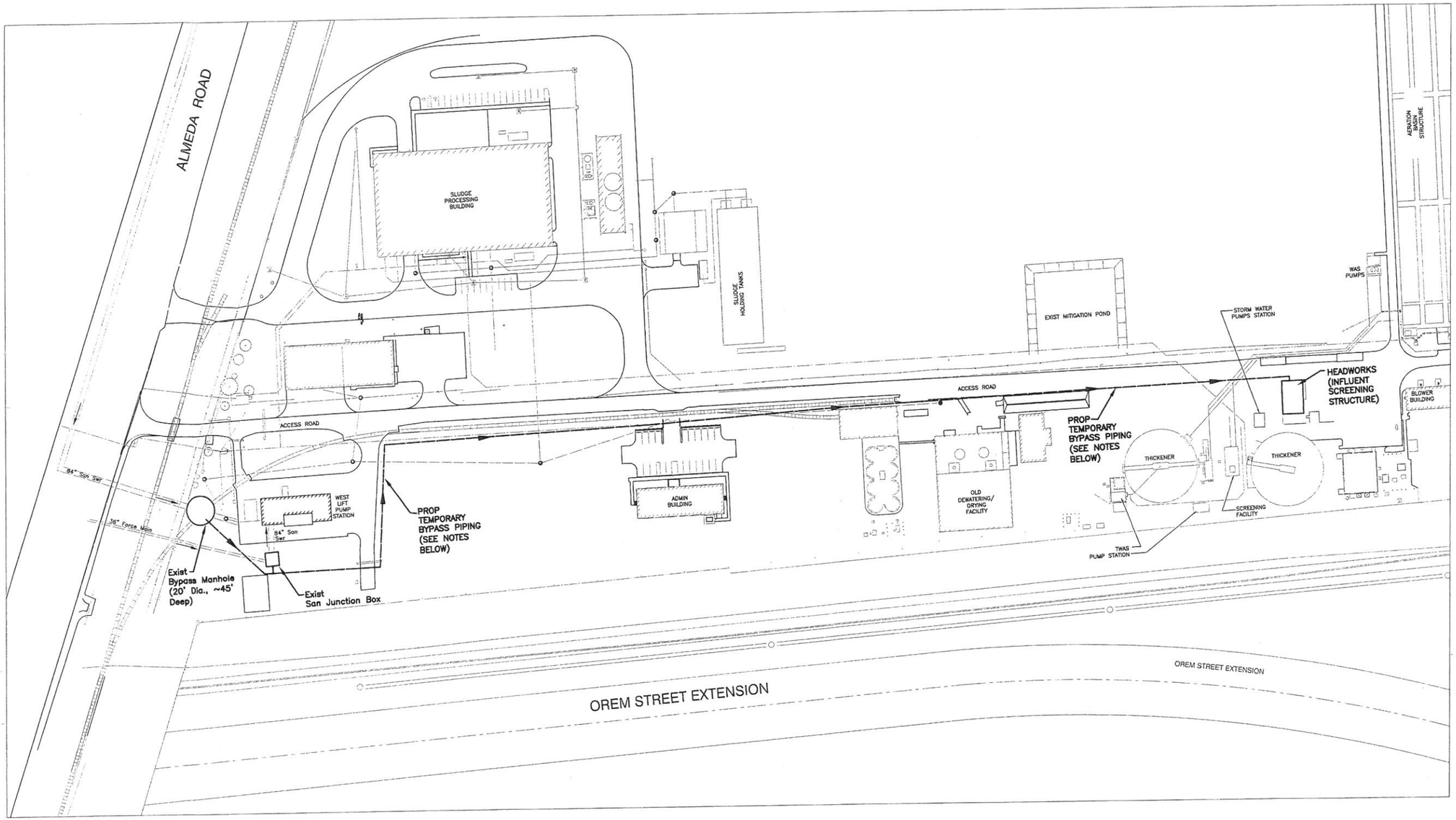

NOTES:

1. WASTEWATER DIVERSION/BYPASS PUMPING IS REQUIRED FOR BOTH 84" DIAMETER INFLUENT PIPES DURING CONSTRUCTION. SEE SPEC 01506 FOR DETAILS.
2. INSTALL MIN TWO (2) BYPASS PUMPS (@12,500 GPM EACH) AT BOTH BYPASS MANHOLE AND JUNCTION BOX.
3. TEMPORARY BYPASS PIPING ROUTE SHALL BE AS DIRECTED BY THE CITY.
4. WASTEWATER SHALL BE DIVERTED FROM THE MANHOLE AND JUNCTION BOX TO THE HEADWORKS, AT THE LOCATION SHOWN, APPROXIMATELY 1,600 LF AWAY.
5. THIS DRAWING IS A REPRODUCTION OF EXISTING RECORD DRAWINGS AND IS INTENDED TO PROVIDE GENERAL INFORMATION OF THE ABOVE GROUND FEATURES, ALONG BYPASS PIPING ROUTE. TOPOGRAPHIC SURVEY WAS NOT PERFORMED.

DWG: M-109

AMANI ENGINEERING, INC.
8313 SOUTHWEST FREEWAY
SUITE 350
HOUSTON, TEXAS 77074
TEL: (713) 270-5700
TBPE REG. NO.: F-4528
TBPLS REG. NO.: 100282-00

STATE OF TEXAS
HARI B. PUTCHAKAYALA
104338
REGISTERED PROFESSIONAL ENGINEER
3/15/13

LJA Engineering Inc.
2929 Briarpark Drive
Suite 600
Houston, Texas 77042
Phone 713.953.5200
Fax 713.953.5026
FRN - F-1386

SURVEYED BY: AMANI ENG. | FB NO.: P-5679

CITY OF HOUSTON
DEPARTMENT OF PUBLIC WORKS AND ENGINEERING

ALMEDA SIMS WWTP & SPF IMPROVEMENTS PACKAGE-3

WEST LIFT STATION CONCEPTUAL BYPASS PUMPING PLAN

WBS NUMBER	R-000298-0008-4
DRAWING SCALE	NTS
CITY OF HOUSTON, PM	IRAJ RANJBAR, P.E.
SHEET NO.	20 OF 117

PUBLIC WORKS AND ENGINEERING
50431
CITY OF HOUSTON
HOUSTON TEXAS

FILE NAME:

ORIGINAL SCALE IN INCHES

\\Cosh\2012\12028 LJA-AlmedaSimsWWTP\CAD DRAWINGS\West Lift Station\M-109 By Pass Pumping Plan.dwg

20

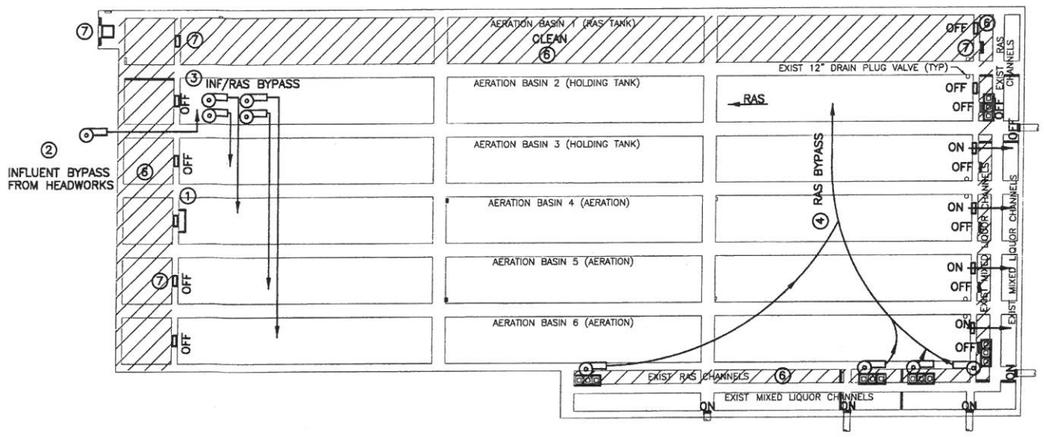

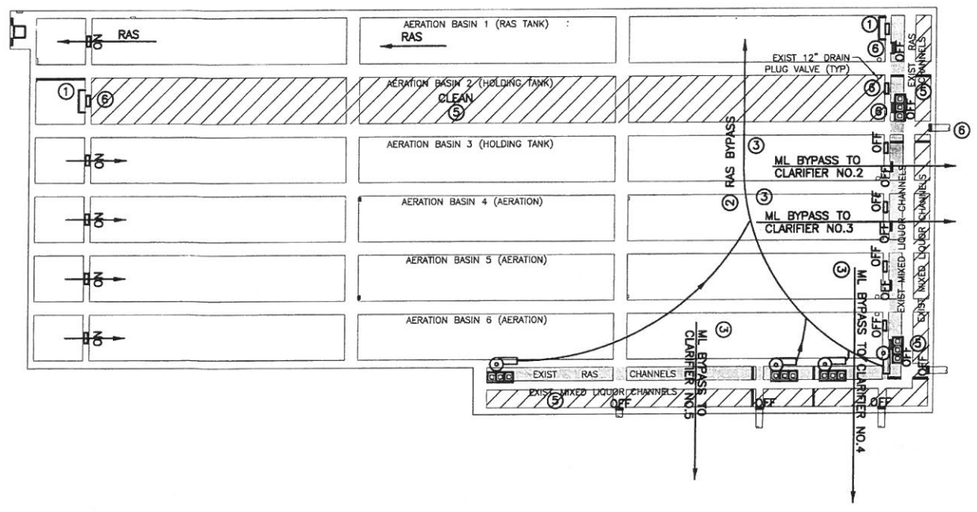

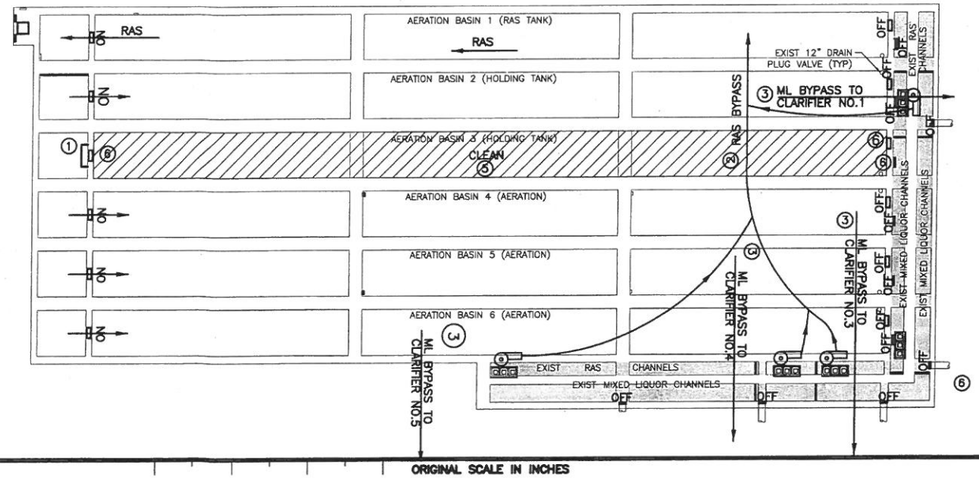

ORIGINAL SCALE IN INCHES

STAGE 1

1. INSTALL ISOLATION BOX OVER INFLUENT GATE OF EXISTING AERATION BASIN 4.
2. INSTALL 52 MGD BYPASS PUMPING FOR INFLUENT FROM HEADWORKS OUTLET BOX TO AERATION BASIN 2. INSTALL TEMPORARY TRAFFIC RATED RAMP ON TEMPORARY FORCE MAIN AT DRIVEWAY.
3. INSTALL 12.5 MGD BYPASS PUMPING FROM EXISTING AERATION BASIN 2 TO EACH EXISTING AERATION TANK.
4. INSTALL 3.5 MGD RAS BYPASS PUMPING FROM AIRLIFT STATION TO EXISTING AERATION BASIN 2. MAINTAIN CLARIFIER NO. 1 OUT OF SERVICE.
5. OPEN AND CLOSE GATES AS INDICATED.
6. DRAIN EXISTING INFLUENT CHANNEL, AERATION BASIN 1 AND RAS CHANNEL. CLEAN UP, COLLECT, REMOVE AND DISPOSE OF SOLIDS AND GRIT FROM BASINS.
7. REMOVE AND REPLACE GATES AND ACCESS HATCH, AND RECOAT/REPLACE/INSTALL AIR DIFFUSERS PER SHEET 23.
8. REMOVE TEMPORARY ISOLATION ITEMS UNLESS REQUIRED FOR NEXT STAGE, AND PUT PLANT UNITS BACK INTO SERVICE.

STAGE 2

1. INSTALL ISOLATION BOX OVER INFLUENT GATE OF AERATION BASIN 2 AND EFFLUENT GATE OF RAS TANK NO. 2.
2. MAINTAIN RAS CHANNEL OUT OF SERVICE. INSTALL 3.5 MGD RAS BYPASS FROM EACH AIRLIFT STATION TO EXISTING AERATION BASIN 1
3. INSTALL 12.5 MGD BYPASS PUMPING FROM AERATION TANKS TO CLARIFIERS NUMBER 2, 3, 4, & 5. MAINTAIN CLARIFIER NO. 1 OUT OF SERVICE.
4. OPEN AND CLOSE GATES AS INDICATED.
5. DRAIN EXISTING AERATION BASIN 2, MIXED LIQUOR CHANNEL, AND CLARIFIER NO. 1 AS REQUIRED. CLEAN UP, COLLECT, REMOVE AND DISPOSE OF SOLIDS AND GRIT FROM AERATION TANK AND CHANNEL.
6. REMOVE AND REPLACE GATES, INSTALL AIR PIPE VALVE, AND RECOAT/REPLACE/INSTALL AIR DIFFUSERS FOR SHEET 23.
7. REMOVE TEMPORARY ISOLATION BYPASS ITEMS UNLESS REQUIRED FOR NEXT STAGE AND PUT PLANT UNITS BACK INTO SERVICE.

STAGE 3

1. INSTALL ISOLATION BOX OVER INFLUENT GATE TO AERATION BASIN 3.
2. MAINTAIN RAS CHANNEL OUT OF SERVICE. INSTALL 3.5 MGD RAS BYPASS PUMPING FROM EACH AIRLIFT STATION TO AERATION BASIN 1.
3. MAINTAIN MIXED LIQUOR CHANNEL OUT OF SERVICE. INSTALL 12.5 MGD BYPASS PUMPING FROM EACH AERATION TANK TO CLARIFIERS NO. 1, 3, 4, & 5. MAINTAIN CLARIFIER NO. 2 OUT OF SERVICE.
4. OPEN AND CLOSE GATES AS INDICATED.
5. DRAIN AERATION BASIN 3 AND CLARIFIER NO. 2 AS REQUIRED. CLEAN UP, COLLECT, REMOVE AND DISPOSE OF SOLIDS AND GRIT FROM AERATION TANK.
6. REMOVE AND REPLACE GATES AND RECOAT/REPLACE INSTALL AIR DIFFUSERS PER SHEET 23.
7. REMOVE ISOLATION/BYPASS ITEMS, UNLESS REQUIRED FOR NEXT STAGE, AND PUT PLANT UNITS BACK INTO OPERATION.
8.

NOTES:

1. CONTRACTOR SHALL DRAIN EACH BASIN IN COORDINATION WITH THE PLANT OPERATOR, CLEAN UP, COLLECT, REMOVE AND DISPOSE OF SOLIDS/GRIT FROM EXISTING BASINS. CONTRACTOR IS RESPONSIBLE FOR TESTING AND DISPOSAL OF SLUDGE OR SOLID WASTE AT A WASTE DISPOSAL FACILITY IN ACCORDANCE WITH LOCAL, STATE AND FEDERAL REGULATIONS AT NO ADDITIONAL COST TO THE CITY.
2. PROPOSED BYPASS PLAN IS AN OPTION PRESENTED BY THE DESIGN ENGINEER. IT IS THE CONTRACTOR DECISION TO FOLLOW THIS PLAN OR TO PRESENT ANY OTHER ALTERNATIVE THAT HE CONSIDERS MORE TECHNICALLY OR ECONOMICALLY SUITABLE FOR THE PERFORMANCE OF THE PROPOSED WORK.
3. AERATION BASIN IMPROVEMENT WORK IS TO BE DONE DURING DRY WEATHER FLOWS. CONTRACTOR TO HAVE CONTINGENCY PLAN IN CASE WET WEATHER OCCURS DURING IMPROVEMENT WORK PUT PLANT IN NORMAL OPERATION AND BACK IN BYPASS OPERATION. CONTRACTOR TO MONITOR WEATHER FORECAST CONTINUOUSLY.
4. CONTRACTOR SHALL COORDINATE ALL BYPASS PUMPING WITH THE FACILITY OPERATOR TO MATCH ALL LIFT STATIONS AND PLANT FLOW PATTERNS. AT LEAST THREE PUMPS SHALL BE PROVIDED TO FEED A CLARIFIER. RETURN SLUDGE FROM THE CLARIFIER IS TO BE CONTROLLED WITH TIMER.
5. AN ALTERNATE OPTION TO INSTALLING ON ISOLATION BOX OVER THE INFLUENT GATES IS TO MAINTAIN THE INFLUENT CHANNEL OUT OF SERVICE, AND THE BYPASS PUMPING FROM THE HEADWORKS AND THE INFLUENT/RAS BYPASS PUMPING OPERATIONAL WHILE DOING THE BASIN CLEANING AND INFLUENT GATE REPLACEMENT.
6. THE DESIGN OF THE PROPOSED ISOLATION BOX OVER THE INFLUENT GATES IS THE CONTRACTORS RESPONSIBILITY.
7. THE CONTRACTOR SHALL SUBMIT BYPASS PLAN AND EQUIPMENT TO BE USED TO THE ENGINEER FOR APPROVAL.

LEGEND:

- DIRECTION OF FLOW
- BYPASS PUMPING
- (4) BYPASS/CLEANING/IMPROVEMENT ACTIVITY. SEE STAGE FOR DESCRIPTION.
- AREA UNDER CLEANING WORK
- AREA OUT OF SERVICE

DATE	REVISION	BY

STATE OF TEXAS
MELEDA SIERRA
98809
LICENSED PROFESSIONAL ENGINEER
3/18/2013

LJA Engineering Inc.
2929 Briarpark Drive
Suite 600
Houston, Texas 77042
Phone 713.953.5200
Fax 713.953.5026
FRN - F-1386

SURVEYED BY: AMANI ENG. | FB NO.: P-5679

CITY OF HOUSTON

DEPARTMENT OF PUBLIC WORKS AND ENGINEERING

ALMEDA SIMS WWTP & SPF IMPROVEMENTS PACKAGE-3

AERATION BASIN CLEANING AND BYPASS PLAN 1 OF 2

WBS NUMBER	R-000298-0008-4
DRAWING SCALE	SCALE: 1"=20'
CITY OF HOUSTON, PM	IRAJ RANJBAR, P.E.
SHEET NO.	21 OF 117

PUBLIC WORKS AND ENGINEERING
50431
CITY OF HOUSTON
HOUSTON, TEXAS

DWG: M-201

I:\Projdata1\2005\2011\PHASE II\21 Aeration Basin_Cleaning and Bypass Plan 1 of 2.dwg

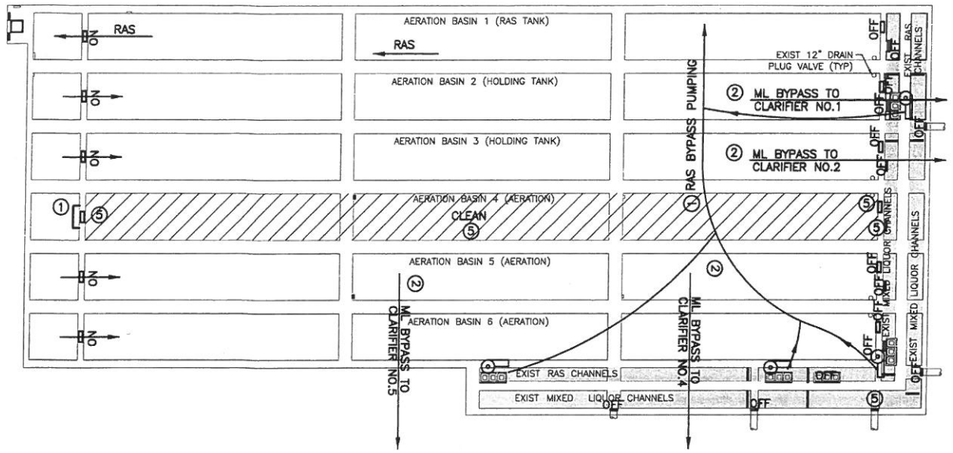

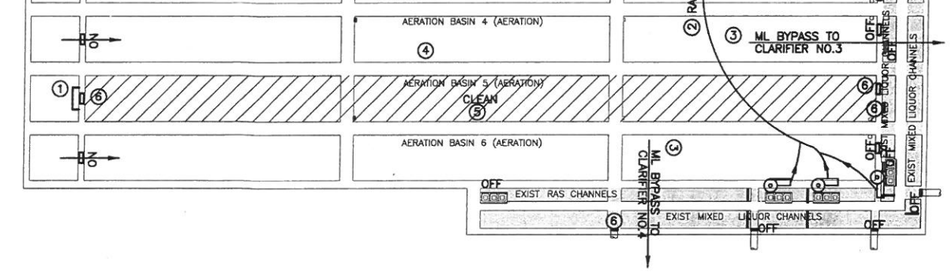

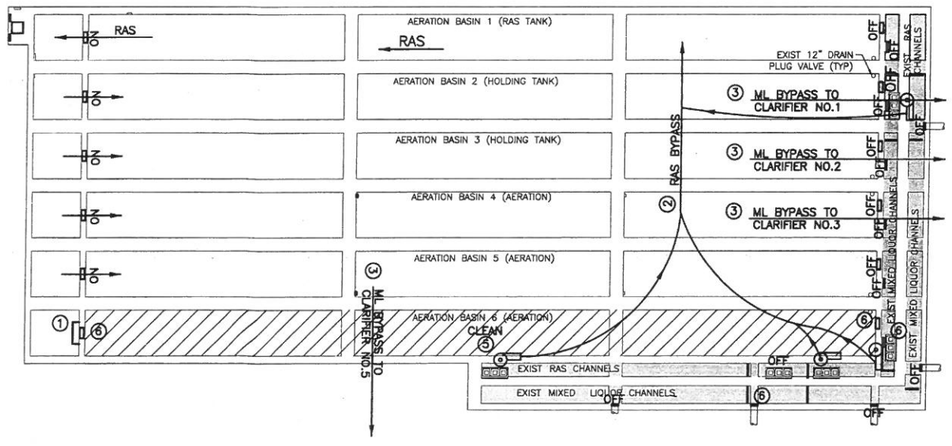

STAGE 4

1. MAINTAIN RAS CHANNEL OUT OF SERVICE. INSTALL 3.5 MGD RAS BYPASS PUMPING FROM EACH AIRLIFT STATION TO AERATION BASIN 1.
2. MAINTAIN MIXED LIQUOR CHANNEL OUT OF SERVICE. INSTALL 12.5 MGD BYPASS PUMPING FROM EACH AERATION TANK TO CLARIFIER 1, 2, 4, & 5. MAINTAIN CLARIFIER 3 OUT OF SERVICE.
3. OPEN AND CLOSE GATES AS INDICATED.
4. DRAIN AERATION BASIN 4, AND CLARIFIER NO. 3 AS REQUIRED. CLEANUP, COLLECT, REMOVE AND DISPOSE OF SOLIDS AND GRIT FROM AERATION TANK.
5. REMOVE AND REPLACE GATES AND RECOAT/REPLACE/INSTALL AIR DIFFUSER PER SHEET 23.
6. REMOVE ISOLATION BYPASS ITEMS, UNLESS REQUIRED FOR NEXT STAGE, AND PUT PLANT UNITS BACK INTO OPERATION.

STAGE 5

1. INSTALL ISOLATION BOX OVER INFLUENT GATE TO AERATION BASIN 5.
2. MAINTAIN RAS CHANNEL OUT OF SERVICE. INSTALL 3.5 MGD RAS BYPASS PUMPING FROM EACH AIRLIFT STATION TO AERATION BASIN 1.
3. MAINTAIN MIXED LIQUOR CHANNEL OUT OF SERVICE. INSTALL 12.5 MGD BYPASS PUMPING FROM EACH AERATION TANK TO CLARIFIER NO.1, 2, 3, & 4. MAINTAIN CLARIFIER NO.5 OUT OF SERVICE.
4. OPEN AND CLOSE GATES AS INDICATED.
5. DRAIN AERATION BASIN 5 AND CLARIFIER NO. 5 AS REQUIRED. CLEANUP, COLLECT, REMOVE, AND DISPOSE OF SOLIDS AND GRIT FROM AERATION TANK.
6. REMOVE AND REPLACE GATES, INSTALL AIRPIPE VALVE, FIX AIR WALL PIPE LEAKS, AND RECOAT/REPLACE/INSTALL AIR DIFFUSERS PER SHEET 23.
7. REMOVE ISOLATION/BYPASS ITEMS, UNLESS REQUIRED FOR NEXT STAGE, AND PUT PLANT BACK INTO OPERATION.

STAGE 6

1. INSTALL ISOLATION BOX OVER INFLUENT GATE TO AERATION BASIN 6.
2. MAINTAIN RAS CHANNEL OUT OF SERVICE. INSTALL 3.5 MGD RAS BYPASS PUMPING FROM EACH AIRLIFT STATION TO AERATION BASIN 1.
3. MAINTAIN MIXED LIQUOR CHANNEL OUT OF SERVICE. INSTALL 12.5 MGD BYPASS PUMPING FROM EACH AERATION TANK TO CLARIFIER NO.1, 2, 3, & 5. MAINTAIN CLARIFIER NO. 4 OUT OF SERVICE.
4. OPEN AND CLOSE GATES AS INDICATED.
5. DRAIN AERATION BASIN 6 AND CLARIFIER NO. 4 AS REQUIRED. CLEANUP, COLLECT, REMOVE, AND DISPOSE OF SOLIDS AND GRIT FROM AERATION TANK.
6. REMOVE AND REPLACE GATES AND RECOAT/REPLACE INSTALL AIR DIFFUSERS PER SHEET 23.
7. REMOVE ISOLATION/BYPASS ITEMS, UNLESS REQUIRED FOR NEXT STAGE, AND PUT PLANT BACK INTO OPERATION.

NOTES:

1. CONTRACTOR SHALL DRAIN EACH BASIN IN COORDINATION WITH THE PLANT OPERATOR, CLEAN UP, COLLECT, REMOVE AND DISPOSE OF SOLIDS/GRIT FROM EXISTING BASINS. CONTRACTOR IS RESPONSIBLE FOR TESTING AND DISPOSAL OF SLUDGE OR SOLID WASTE AT A WASTE DISPOSAL FACILITY IN ACCORDANCE WITH LOCAL, STATE AND FEDERAL REGULATIONS AT NO ADDITIONAL COST TO THE CITY.

2. PROPOSED BYPASS PLAN IS AN OPTION PRESENTED BY THE DESIGN ENGINEER. IT IS THE CONTRACTOR DECISION TO FOLLOW THIS PLAN OR TO PRESENT ANY OTHER ALTERNATIVE THAT HE CONSIDERS MORE TECHNICALLY OR ECONOMICALLY SUITABLE FOR THE PERFORMANCE OF THE PROPOSED WORK.

3. AERATION BASIN IMPROVEMENT WORK IS TO BE DONE DURING DRY WEATHER FLOWS. CONTRACTOR TO HAVE CONTINGENCY PLAN IN CASE WET WEATHER OCCURS DURING IMPROVEMENT WORK PUT PLANT IN NORMAL OPERATION AND BACK IN BYPASS OPERATION. CONTRACTOR TO MONITOR WEATHER FORECAST CONTINUOUSLY.

4. CONTRACTOR SHALL COORDINATE ALL BYPASS PUMPING WITH THE FACILITY OPERATOR TO MATCH ALL LIFT STATIONS AND PLANT FLOW PATTERNS. AT LEAST THREE PUMPS SHALL BE PROVIDED TO FEED A CLARIFIER. RETURN SLUDGE FROM THE CLARIFIER IS TO BE CONTROLLED WITH TIMER.

5. AN ALTERNATE OPTION TO INSTALLING ON ISOLATION BOX OVER THE INFLUENT GATES IS TO MAINTAIN THE INFLUENT CHANNEL OUT OF SERVICE, AND THE BYPASS PUMPING FROM THE HEADWORKS AND THE INFLUENT/RAS BYPASS PUMPING OPERATIONAL WHILE DOING THE BASIN CLEANING AND INFLUENT GATE REPLACEMENT.

6. THE DESIGN OF THE PROPOSED ISOLATION BOX OVER THE INFLUENT GATES IS THE CONTRACTORS RESPONSIBILITY.

7. THE CONTRACTOR SHALL SUBMIT BYPASS PLAN AND EQUIPMENT TO BE USED TO THE ENGINEER FOR APPROVAL.

LEGEND:

- DIRECTION OF FLOW
- BYPASS PUMPING
- ④ BYPASS/CLEANING/IMPROVEMENT ACTIVITY. SEE STAGE FOR DESCRIPTION.
- AREA UNDER CLEANING WORK
- AREA OUT OF SERVICE

DATE	REVISION	BY

STATE OF TEXAS — MELEIDA SIERRA — 98809 — LICENSED PROFESSIONAL ENGINEER — 3/19/2013

LJA Engineering Inc.
2929 Briarpark Drive
Suite 600
Houston, Texas 77042
Phone 713.953.5200
Fax 713.953.5026
FRN - F-1386

SURVEYED BY: AMANI ENG. | FB NO.: P-5679

CITY OF HOUSTON
DEPARTMENT OF PUBLIC WORKS AND ENGINEERING

ALMEDA SIMS WWTP & SPF IMPROVEMENTS PACKAGE-3

AERATION BASIN CLEANING AND BYPASS PLAN 2 OF 2

WBS NUMBER	
R-000298-0008-4	
DRAWING SCALE	
SCALE: N.T.S.	
CITY OF HOUSTON, PM	
IRAJ RANJBAR, P.E.	
SHEET NO. 22 OF 117	

PUBLIC WORKS & ENGINEERING — 50431 — HOUSTON TEXAS

DWG: M-202

ORIGINAL SCALE IN INCHES

\\Whou-0002a-fpr\cad\Projdata1\2005\2011\PHASE IN\22 Aeration basin cleaning and bypass plan 2 of 2.dwg

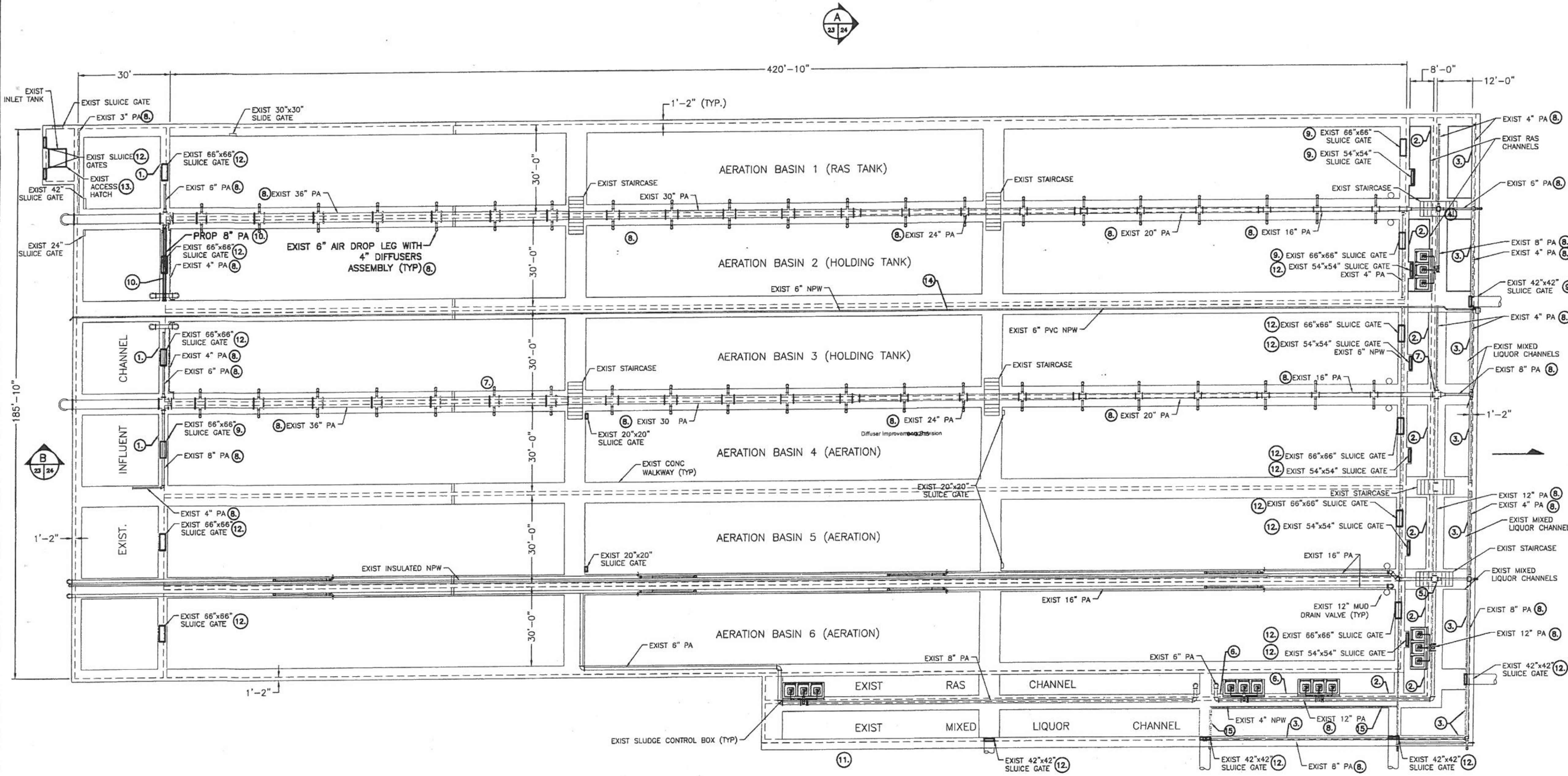

IMPROVEMENT DESCRIPTION

1. REPLACE DIFFUSER SUPPORT SYSTEM AND ALL DIFFUSERS, AND A TOTAL OF 36 OF 78 MISSING/DAMAGED DIFFUSER ASSEMBLIES IN THE INFLUENT CHANNELS. SEE DETAIL C AND E ON SHEET 24.
2. REPLACE DIFFUSER SUPPORT SYSTEM AND ALL DIFFUSERS, AND A TOTAL OF 47 OF 131 MISSING/DAMAGED DIFFUSER ASSEMBLIES IN THE RAS CHANNELS. SEE DETAIL C AND E ON SHEET 24.
3. REPLACE DIFFUSER SUPPORT SYSTEM AND ALL DIFFUSERS, AND A TOTAL OF 37 OF 193 MISSING/DAMAGED DIFFUSER ASSEMBLIES IN THE MIXED LIQUOR CHANNEL. SEE DETAIL C AND E ON SHEET 24.
4. INSTALL 8" BUTTERFLY VALVE ON EXIST AIR PIPE.
5. INSTALL 12" BUTTERFLY VALVE ON EXIST AIR PIPE.
6. INSTALL 20 NEW SINGLE DROP AIR DIFFUSERS IN RAS CHANNEL. SEE DETAIL C ON SHEET 24.
7. REPLACE GASKETS AND/OR BOLTS AND ELIMINATE AIR LEAKS ON CROSS.
8. EXISTING PRESSURED AIR PIPING TO BE CLEANED AND RECOATED PER SPECIFICATIONS SECTION 09901, 3.03.4.
9. REMOVE AND REPLACE EXISTING GATE, RAILS, STEM SUPPORT, OPERATOR AND OPERATOR PEDESTAL. REPLACE WITH FRP COATED STEEL GATE AND NEW ELECTRICAL OPERATOR.
10. REMOVE EXIST 4" PA AND INSTALL PROP. 8" PA W/13-1" SS SINGLE DROP DIFFUSERS AT 8" CC ON EACH SIDE OF GATE (26 DIFFUSERS TOTAL). SEE DETAIL D ON SHEET 24. SUPPORT WITH TWO PIPE SUPPORTS. SEE DETAIL B, SHEET 46.
11. SEAL 10-2" AIR WALL PIPE LEAKAGE BY INJECTING RESIN. PER SPECIFICATION 03931.
12. REMOVE AND REPLACE EXISTING GATE, FRAME, RAILS, STEM SUPPORT AND OPERATOR PEDESTAL. REPLACE WITH FRP COATED STEEL GATE. CLEAN RECOAT AND REUSE EXISTING ELECTRICAL MOTOR OPERATORS.
13. REMOVE AND REPLACE EXIST 5'-4" X 5'-4" STEEL GRATE ACCESS HATCH AND REPLACE WITH FIBERGLASS ACCESS HATCH
14. REPLACE 25' OF 6" NPW WITH GALV. STL. PIPE, FE.
15. REPLACE 75 OF 4" NPW WITH GALV. STL. PIPE, FE.

DATE	REVISION	BY
04/22/13	Diffuser Improvements Revision	M.S.

STATE OF TEXAS — MELEIDA SIERRA — 96809 — LICENSED PROFESSIONAL ENGINEER — 3/18/2013

LJA Engineering Inc.
2929 Briarpark Drive
Suite 600
Houston, Texas 77042
Phone 713.953.5200
Fax 713.953.5026
FRN - F-1386

SURVEYED BY: AMANI ENG. | FB NO.: P-5679

CITY OF HOUSTON
DEPARTMENT OF PUBLIC WORKS AND ENGINEERING

ALMEDA SIMS WWTP & SPF IMPROVEMENTS PACKAGE-3

AERATION BASIN IMPROVEMENT PLAN

WBS NUMBER: R-000298-0008-4
DRAWING SCALE: SCALE: 1" = 20'
CITY OF HOUSTON, PM
IRAJ RANJBAR, P.E.
SHEET NO. 23 OF 117

DWG: M-203

ADDENDUM NO. 1

ORIGINAL SCALE IN INCHES FOR REDUCED PLANS

\\Whou-0002a-fps\cad\Projdsk1\2005\2011\PHASE II\23_Aeration Basin Improvement Plan.dwg

IMPROVEMENT DESCRIPTION

(#) INDICATE IMPROVEMENT WORK, SEE SHEET 23 FOR IMPROVEMENT DESCRIPTION.

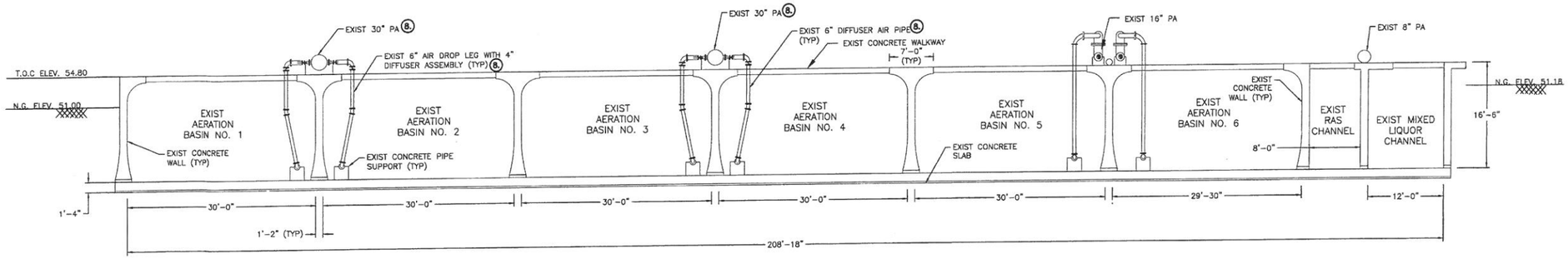

A 23 24 AERATION TANK ELEVATION
SCALE 1"=10'

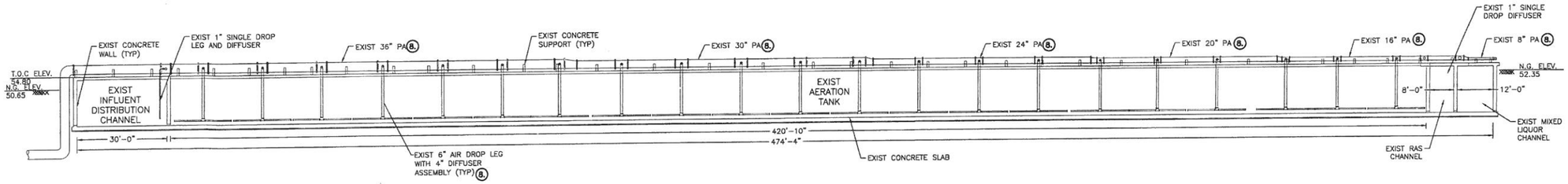

B 23 24 AERATION TANK ELEVATION
SCALE 1"=20'

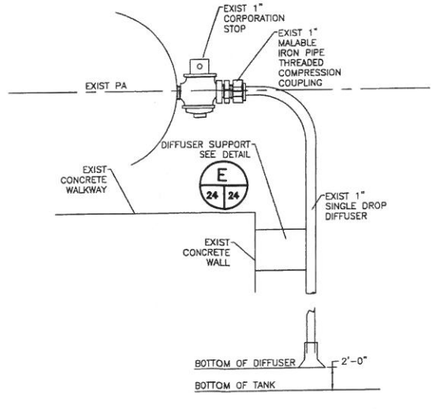

C 23 24 EXISTING SINGLE DROP DIFFUSER DETAIL
NTS

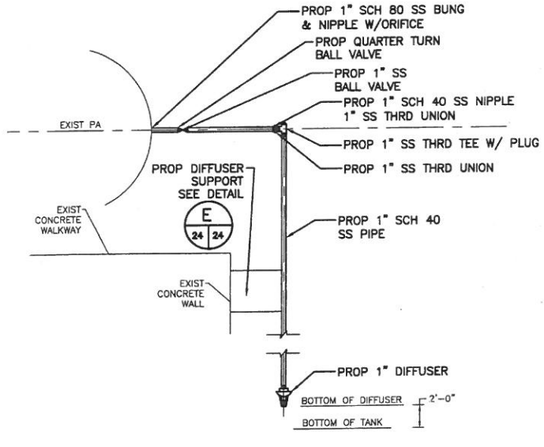

D 23 24 PROPOSED SINGLE DROP DIFFUSER
NTS

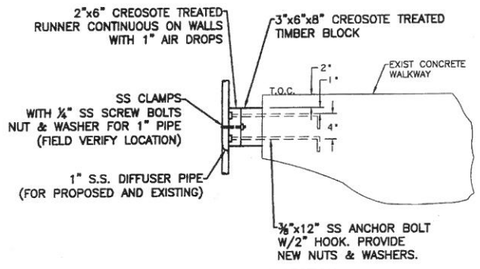

SUPPORT SECTION
NTS

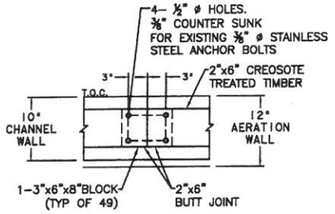

BUTT JOINT
NTS

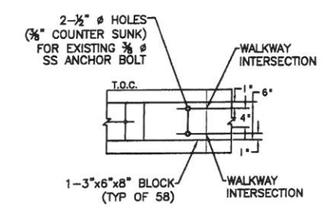

AT WALKWAY
NTS

E 24 24 AIR DIFFUSER SUPPORT
NTS

DWG: M-204

DATE	REVISION	BY

STATE OF TEXAS
MELEIDA SIERRA
96809
LICENSED PROFESSIONAL ENGINEER
3/15/2013

LJA Engineering Inc.
2929 Briarpark Drive
Suite 600
Houston, Texas 77042
Phone 713.953.5200
Fax 713.953.5026
FRN - F-1386

SURVEYED BY: AMANI ENG. | FB NO.: P-5679

CITY OF HOUSTON

DEPARTMENT OF PUBLIC WORKS AND ENGINEERING

ALMEDA SIMS WWTP & SPF IMPROVEMENTS PACKAGE-3

AERATION BASIN IMPROVEMENT ELEVATION

WBS NUMBER	R-000298-0008-4
DRAWING SCALE	SCALE: AS SHOWN
CITY OF HOUSTON, PM	IRAJ RANJBAR, P.E.
SHEET NO.	24 OF 117

PUBLIC WORKS ENGINEERING 50431 REGISTERED CITY OF HOUSTON TEXAS

\\Wsu-0002a-fps\cad\Projdsk1\2005\2011\PHASE II\24 Aeration Basin Improvement Elevation.dwg

ORIGINAL SCALE IN INCHES

NOTES:

1. REMOVE AND REPLACE EXISTING GROUT AS REQUIRED PER GATE MANUFACTURER.
2. FIELD VERIFY ALL DIMENSIONS PRIOR TO SUBMITTALS.

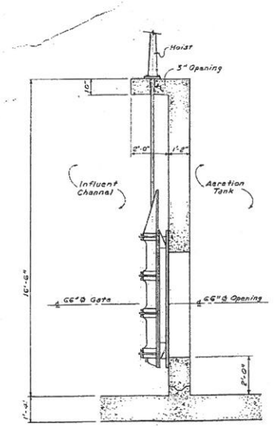

GATE No 1A
66" Sluice Gate in Aeration Tank
Scale: 3/8"=1'-0"

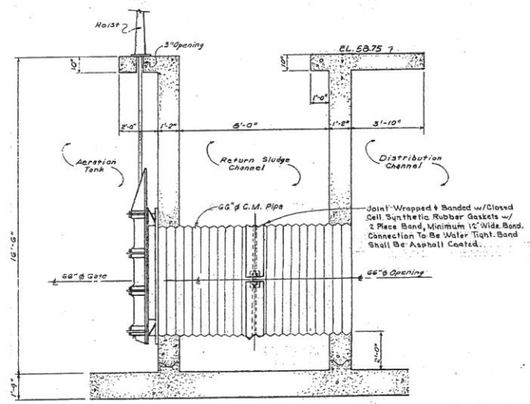

GATE No. 1B
66" Sluice Gate in Aeration Tank
Scale: 3/8"=1'-0"

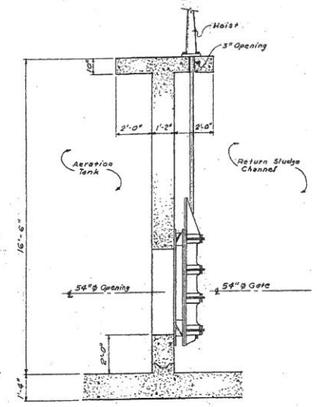

GATE No. 2
54" Sluice Gate in Aeration Tank
Scale: 3/8"=1'-0"

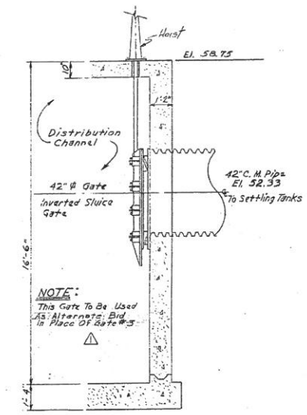

GATE NO 13
42" Sluice Gate in Aeration Tank
Scale: 3/8"=1'-0"

B
23 25
EXISTING GATE DETAILS
SCALE: 1"=4'

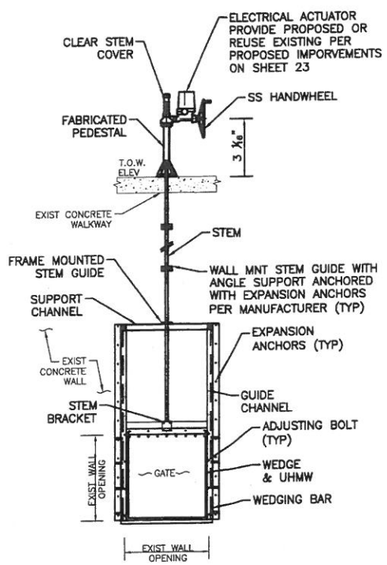

TYPICAL GATE FRONT VIEW

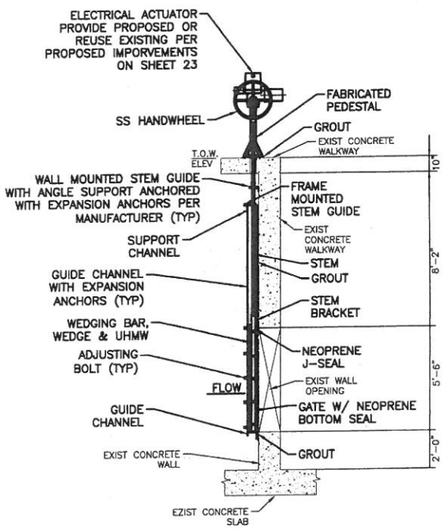

66" SLUICE GATE SECTION

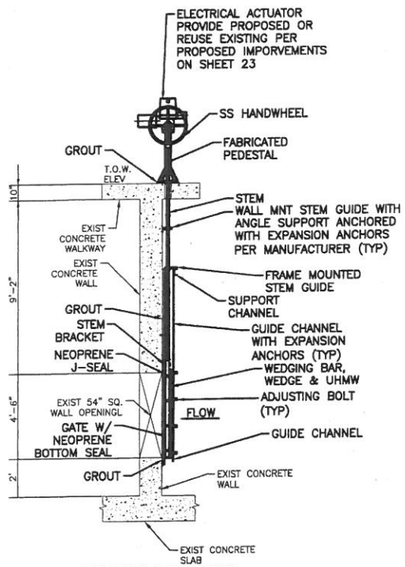

54" SLUICE GATE SECTION

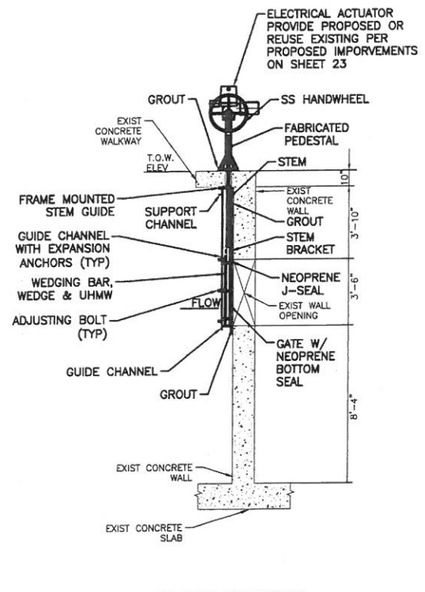

42" SLUICE GATE SECTION

B
23 25
PROPOSED GATE DETAILS
SCALE: 1"=4'

DATE	REVISION	BY

STATE OF TEXAS
MELEIDA SIERRA
96809
LICENSED
PROFESSIONAL ENGINEER
3/14/2013

LJA Engineering Inc.
2929 Briarpark Drive
Suite 600
Houston, Texas 77042
Phone 713.953.5200
Fax 713.953.5026
FRN - F-1386

SURVEYED BY: AMANI ENG. | FB NO.: P-5679

CITY OF HOUSTON
DEPARTMENT OF PUBLIC WORKS AND ENGINEERING

ALMEDA SIMS WWTP & SPF IMPROVEMENTS PACKAGE-3

AERATION BASIN IMPROVEMENT DETAILS

WBS NUMBER	
R-000298-0008-4	
DRAWING SCALE	
SCALE: AS SHOWN	
CITY OF HOUSTON, PM	
IRAJ RANJBAR, P.E.	
SHEET NO. 25 OF 117	

PUBLIC WORKS AND ENGINEERING
50131

DWG: M-205

ORIGINAL SCALE IN INCHES

\\Whou-0002a-fpe\Local\Projekt\2005\2011\PHASE II\25 Aeration Basin Improvement Details.dwg

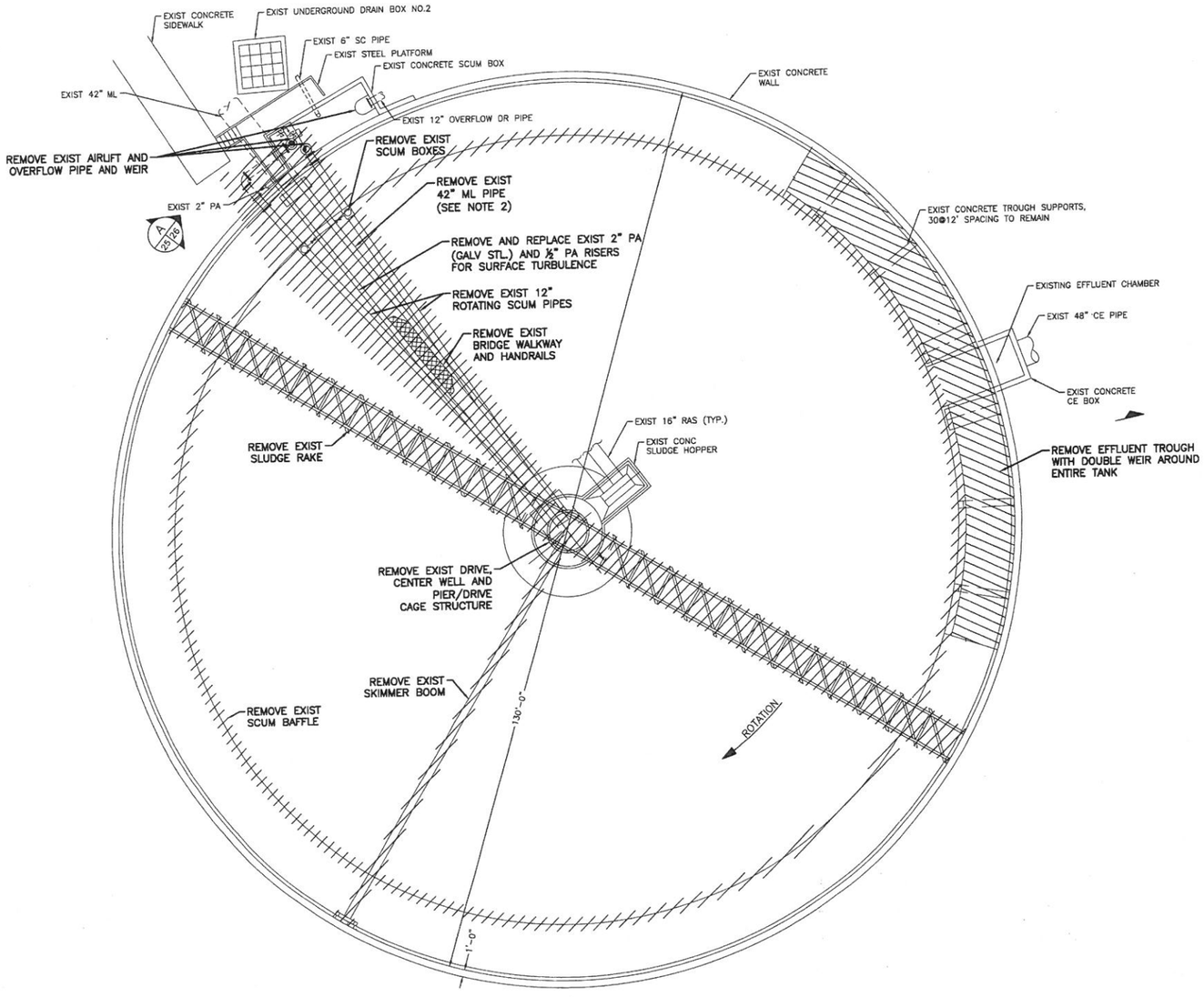

N

NOTES:

1. ALL ELECTRICAL INSTRUMENTATION AND CONTROL WIRING TO BE REMOVED PERMANENTLY TO THE FIRST JUNCTION BOX PER ELECTRICAL DESIGN.
2. REMOVE NEW METER ON CLARIFIER INFLUENT PIPE AND CONVEY TO THE OPERATOR.
3. REMOVE ALL ASSOCIATED CLARIFIER PIPING LIKE PA, NPW, ETC.
4. COORDINATE DRAINING THE CLARIFIER WITH PLANT OPERATOR, DEMUCK AND CLEAN THE BASIN PRIOR TO DEMOLITION WORK.
5. DISPOSE OF REMOVED EQUIPMENT AND MATERIALS. NO SEPARATE PAY.

DATE	REVISION	BY

STATE OF TEXAS
MELIDA SIERRA
96809
LICENSED
PROFESSIONAL ENGINEER
3/18/2013

LJA Engineering Inc.
2929 Briarpark Drive
Suite 600
Houston, Texas 77042
Phone 713.953.5200
Fax 713.953.5026
FRN - F-1386

SURVEYED BY: AMANI ENG. | FB NO.: P-5679

CITY OF HOUSTON
DEPARTMENT OF PUBLIC WORKS AND ENGINEERING

ALMEDA SIMS WWTP & SPF IMPROVEMENTS PACKAGE-3

EXIST CLARIFIER NO. 4 MECHANISM DEMOLITION PLAN

WBS NUMBER
R-000298-0008-4
DRAWING SCALE
SCALE: 1" = 10'
CITY OF HOUSTON, PM
IRAJ RANJBAR, P.E.
SHEET NO. 26 OF 117

DWG: M-301

\\Whou-0002a-fpa\coa\Projdat1\2005\2011\I-HASE II\26 Clarifier Exist Demo Plan.dwg

NOTES:

1. ALL ELECTRICAL INSTRUMENTATION AND CONTROL WIRING TO BE REMOVED PERMANENTLY TO THE FIRST JUNCTION BOX PER ELECTRICAL DESIGN.
2. REMOVE NEW METER ON CLARIFIER INFLUENT PIPE AND CONVEY TO THE OPERATOR.
3. REMOVE ALL ASSOCIATED CLARIFIER PIPING LIKE PA, NPW, ETC.
4. COORDINATE DRAINING THE CLARIFIER WITH PLANT OPERATOR, DEMUCK AND CLEAN THE BASIN PRIOR TO DEMOLITION WORK.
5. DISPOSE OF REMOVED EQUIPMENT AND MATERIALS. NO SEPARATE PAY.

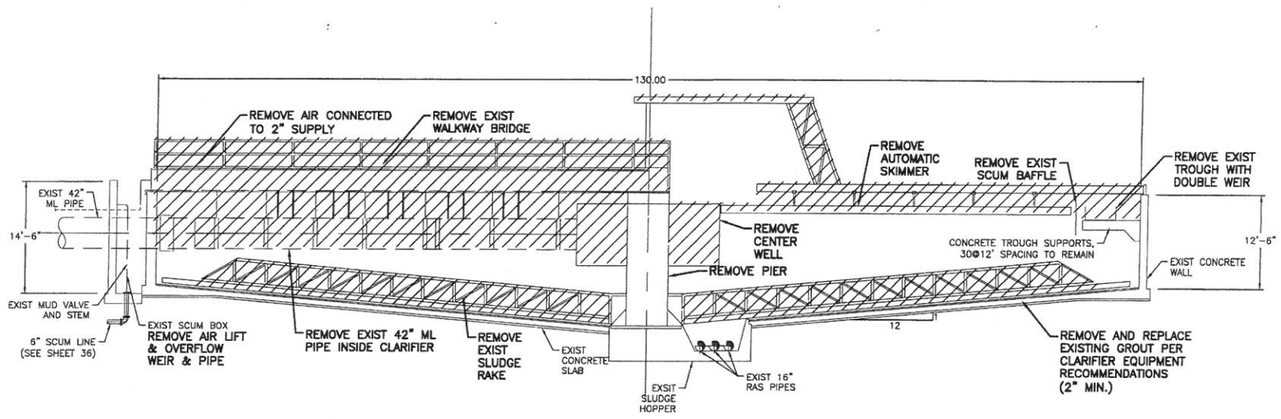

DATE	REVISION	BY

STATE OF TEXAS
MELEDA SIERRA
96809
LICENSED
PROFESSIONAL ENGINEER
3/18/2013

LJA Engineering Inc.
2929 Briarpark Drive
Suite 600
Houston, Texas 77042
Phone 713.953.5200
Fax 713.953.5026
FRN - F-1386

SURVEYED BY: AMANI ENG. | FB NO.: P-5679

CITY OF HOUSTON

DEPARTMENT OF PUBLIC WORKS AND ENGINEERING

ALMEDA SIMS WWTP & SPF IMPROVEMENTS PACKAGE-3

EXIST CLARIFIER NO. 4 MECHANISM DEMOLITION SECTION

WBS NUMBER
R-000298-0008-4
DRAWING SCALE
SCALE: 1" = 10'
CITY OF HOUSTON, PM
IRAJ RANJBAR, P.E.
SHEET NO. 27 OF 117

DWG: M-302

ORIGINAL SCALE IN INCHES

\\Whou-0002a-fpa\ced\Projdskt\2005\20111\PHASE II\27 Clarifier Exist Demo Elevation.dwg

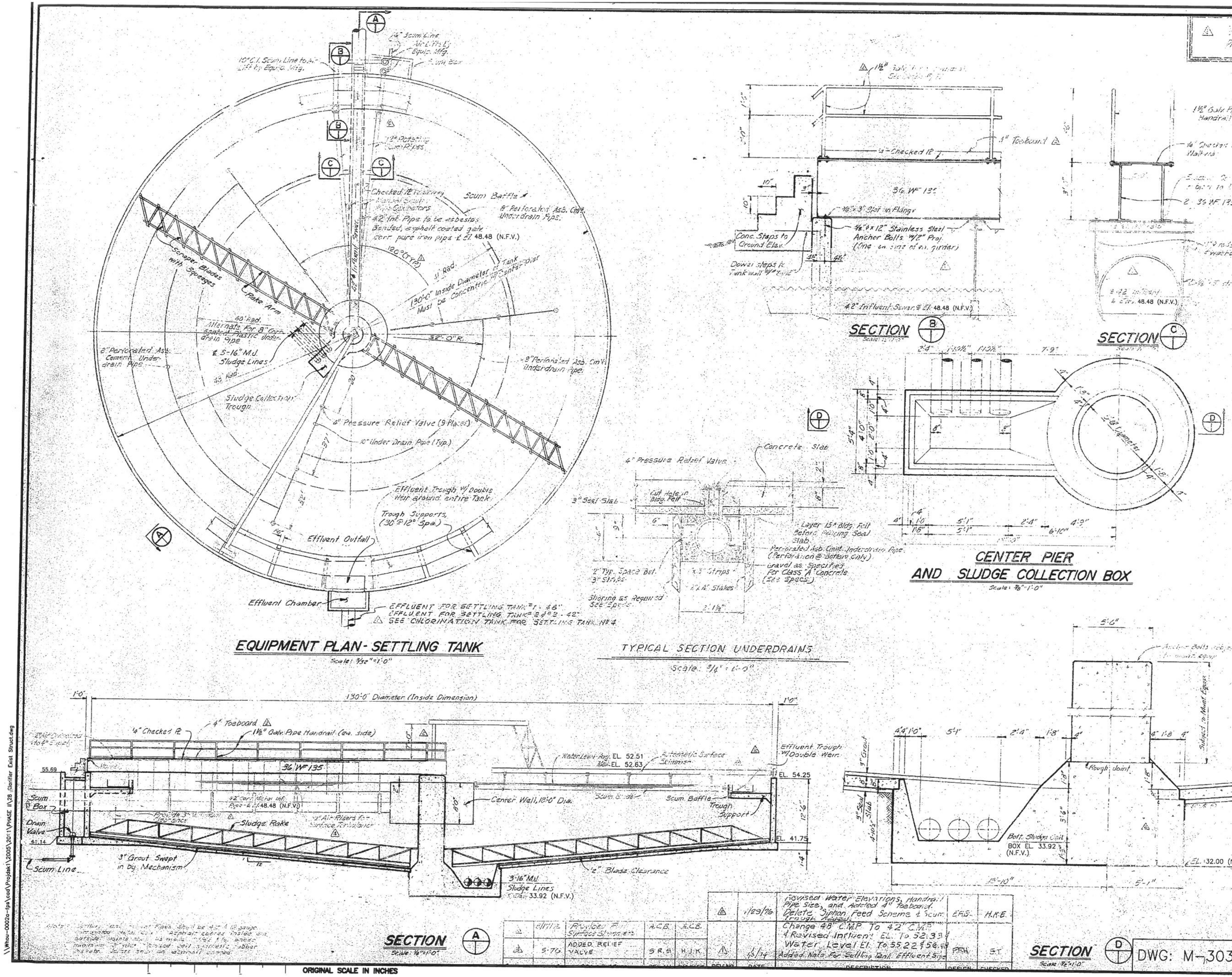

SEE SPECIFICATIONS SPECIAL CONDITIONS PARAGRAPH "Q"

THIS SHEET IS FOR REFERENCE ONLY

DATE	REVISION	BY

STATE OF TEXAS — MELEDA SIERRA — 96809 — LICENSED PROFESSIONAL ENGINEER — 3/18/2013

LJA Engineering Inc.
2929 Briarpark Drive, Suite 600, Houston, Texas 77042
Phone 713.953.5200 Fax 713.953.5026 FRN - F-1386

SURVEYED BY: AMANI ENG. FB NO.: P-5679

CITY OF HOUSTON
DEPARTMENT OF PUBLIC WORKS AND ENGINEERING

ALMEDA SIMS WWTP & SPF IMPROVEMENTS PACKAGE-3

EXISTING CLARIFIER NO. 4 STRUCTURAL DETAILS

WBS NUMBER: R-000298-0008-4
DRAWING SCALE: SCALE: 1" = 1'
CITY OF HOUSTON, PM: IRAJ RANJBAR, P.E.
PUBLIC WORKS AND ENGINEERING, HOUSTON, TEXAS — 50431
SHEET NO. 28 OF 117

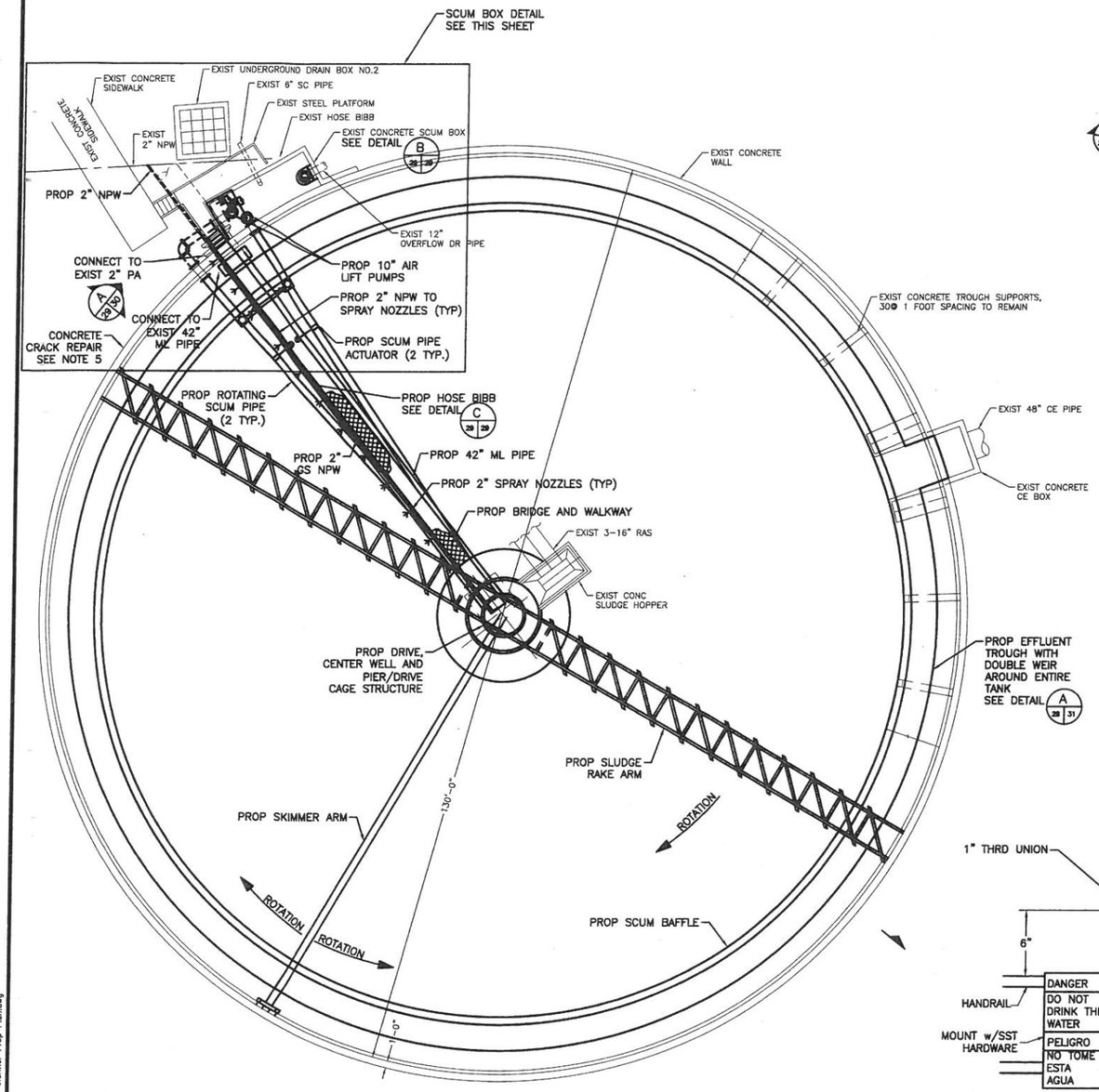

A 11 29 CLARIFIER NO.4 PLAN
SCALE 1"=10'

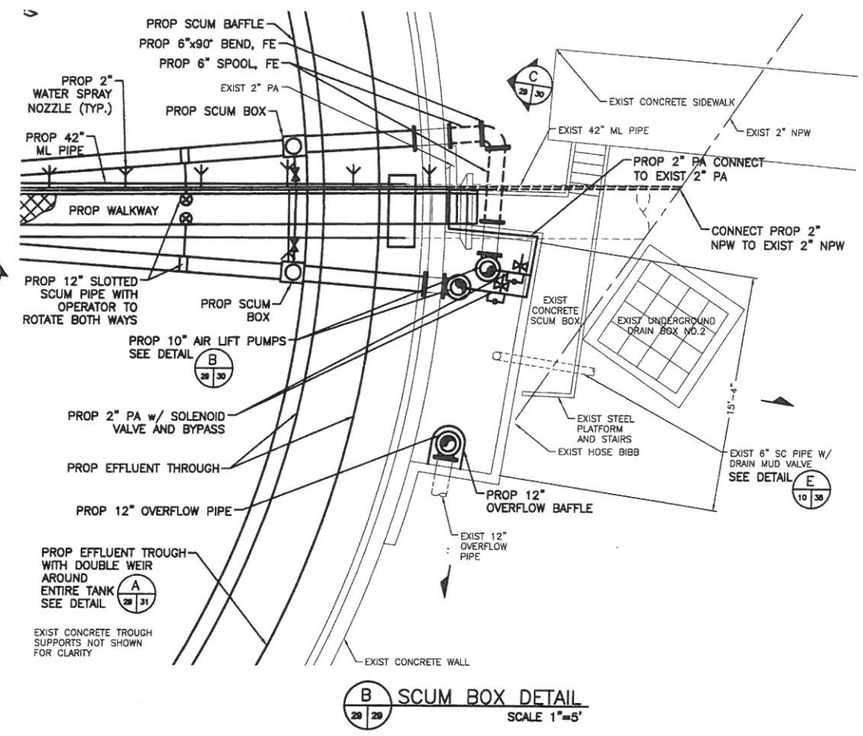

B 28 29 SCUM BOX DETAIL
SCALE 1"=5'

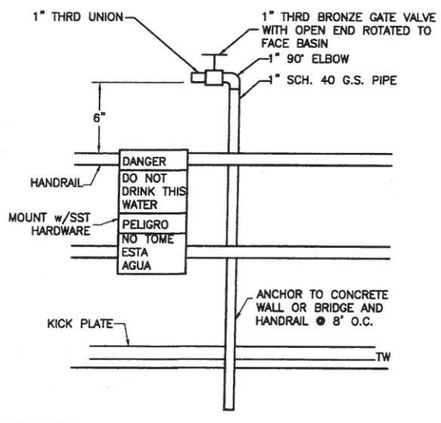

NOTES:

1. PROVIDE PROFESSIONAL DUTY HOSE OR PREMIUM PVC HOSE WITH INDUSTRIAL KNIT REINFORCING FOR 450 PSI BURST STRENGTH AND 125 PSI MAX WORKING PRESSURE, BRASS COUPLINGS AND A 50 FT LENGTH.
2. INSULATE WATER PIPE FROM GROUND TO TOP OF TANK WALL.
3. PROVIDE HOSE RACK AT EACH HOSE BIB LOCATION.

C 29 29 NPW HOSE DETAIL
SCALE: N.T.S.

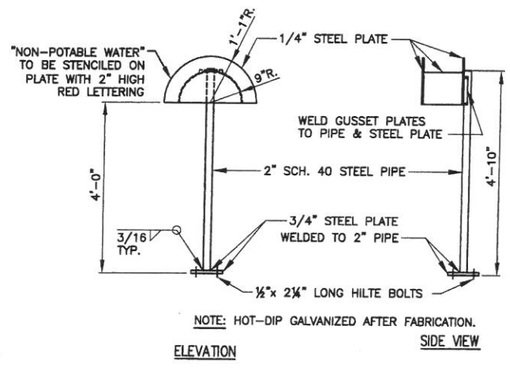

NOTE: HOT-DIP GALVANIZED AFTER FABRICATION.

NOTES:

1. FURNISH COMMERCIAL DUTY REINFORCED RUBBER HOSE, 1"x50' LENGTH WITH BRASS COUPLINGS FOR EACH HOSE RACK. SWAN HOSE MODEL CD 0150 (GRANGER STOCK No. 1P865).

D 29 28 HOSE RACK DETAIL
SCALE: N.T.S.

NOTES:

1. FIELD VERIFY LOCATION OF ALL CLARIFIER PIPES AND SUPPORTS TO CONNECT OR REUSE AND INCLUDE IN CLARIFIER SUBMITTAL.
2. ALL EQUIPMENT STRUCTURAL DESIGN IS THE RESPONSIBILITY OF THE MANUFACTER.
3. ALL STEEL COMPONENTS TO BE HOT DIP GALVANIZED AFTER FABRICATION.
4. NPW AND AIR PIPING TO BE GALVANIZED STEEL.
5. RESTORE CRACKS ON CLARIFIER TANK WALLS BY RESIN INJECTION PER SPECIFICATION 03931. REPAIR CONCRETE SURFACE PER SPECIFICATION 03931. TYP. 4 LOCATIONS OF TANK HEIGHT.
6. PROVIDE CONICAL BRASS SPRAY NOZZLE, WITH ADJUSTABLE BALL FITTING. DIRECT SPRAY TOWARD SCUM BOX.
7. SUPPORT NPW @ 7'-0" O.C. WITH GALVANIZED SUPPORTS, INCLUDING GALVANIZED CLAMPS, BOLTS AND MISCELLANEOUS APPURTENANCES.
8. CHECK CAULKING IN CLARIFIER EXPANSION JOINTS WHEN CLARIFIER IS DEWATARED AND REPLACE IF NEEDED.

DATE	REVISION	BY

STATE OF TEXAS
MELEDA SIERRA
96809
LICENSED
PROFESSIONAL ENGINEER
3/6/2013

LJA Engineering Inc.
2929 Briarpark Drive
Suite 600
Houston, Texas 77042
Phone 713.953.5200
Fax 713.953.5026
FRN - F-1386

SURVEYED BY: AMANI ENG. | FB NO.: P-5679

CITY OF HOUSTON
DEPARTMENT OF PUBLIC WORKS AND ENGINEERING

ALMEDA SIMS WWTP & SPF IMPROVEMENTS PACKAGE-3

CLARIFIER NO. 4 PROPOSED MECHANISM PLAN

WBS NUMBER	R-000298-0008-4
DRAWING SCALE	SCALE: AS SHOWN
CITY OF HOUSTON, PM	IRAJ RANJBAR, P.E.
SHEET NO.	29 OF 117

PUBLIC WORKS AND ENGINEERING
50431
HOUSTON, TEXAS

DWG: M-304

ORIGINAL SCALE IN INCHES

\\Whou-0002a-fps\cad\Projdat\2005\2011\PHASE II\29 Clarifier Prop Plan.dwg

NOTES:

1. PROPOSED CLARIFIER WEIR SHALL MATCH EXISTING WEIR SIZE, SPACING AND ELEVATION.

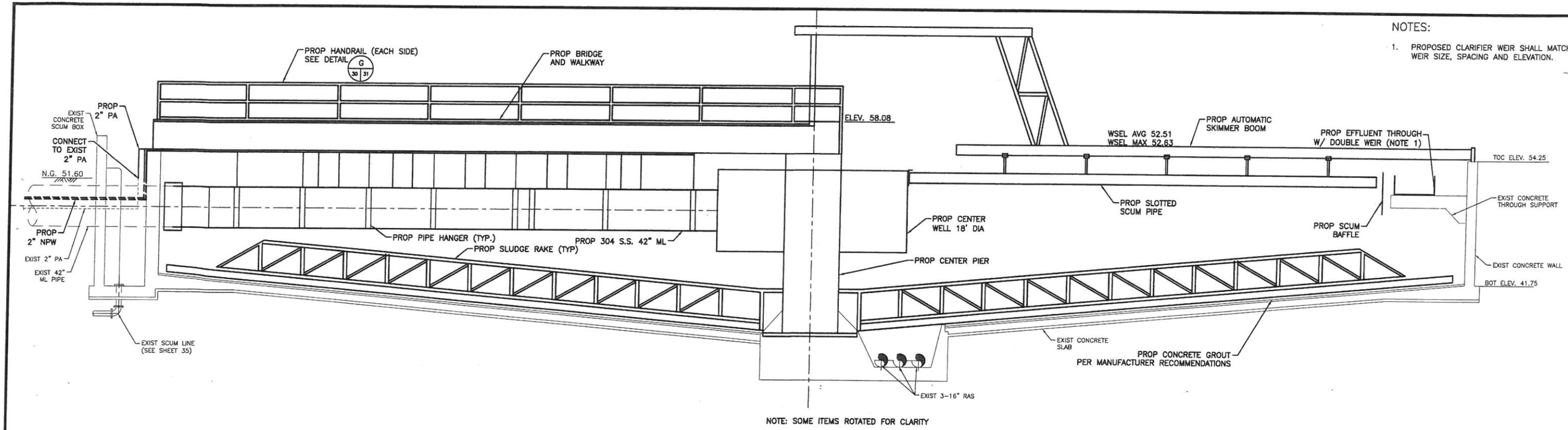

NOTE: SOME ITEMS ROTATED FOR CLARITY

A 29 30 LAUNDER SECTION
SCALE 1"=5'

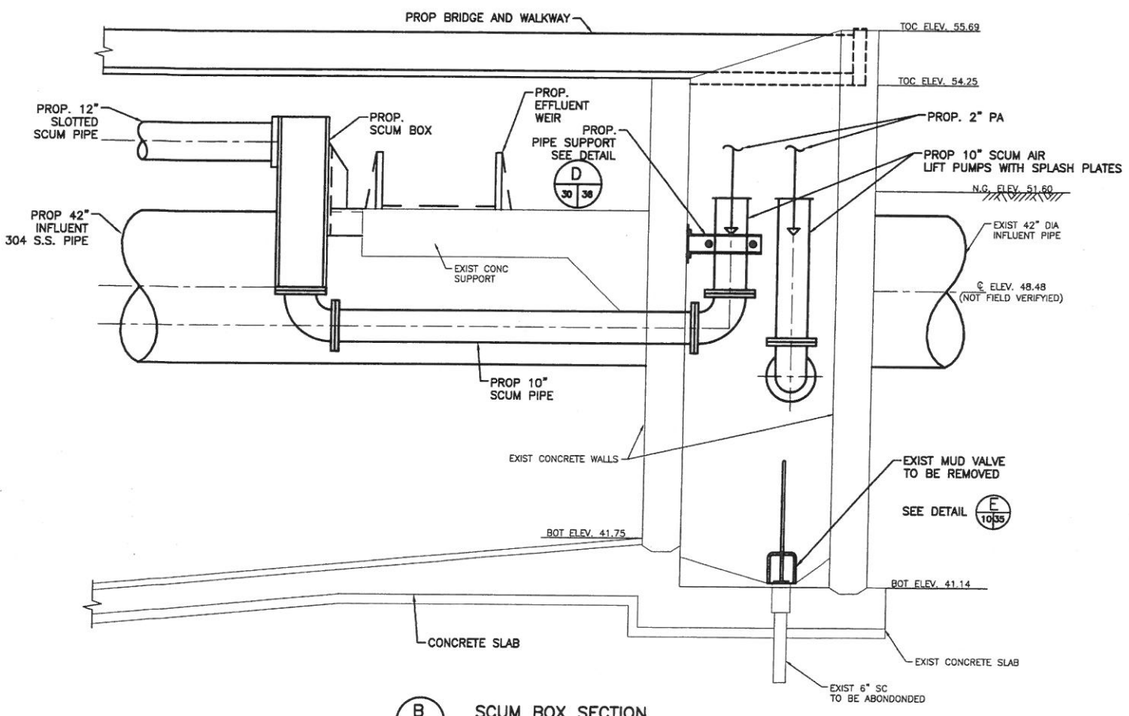

B 29 30 SCUM BOX SECTION
SCALE 1"=2'

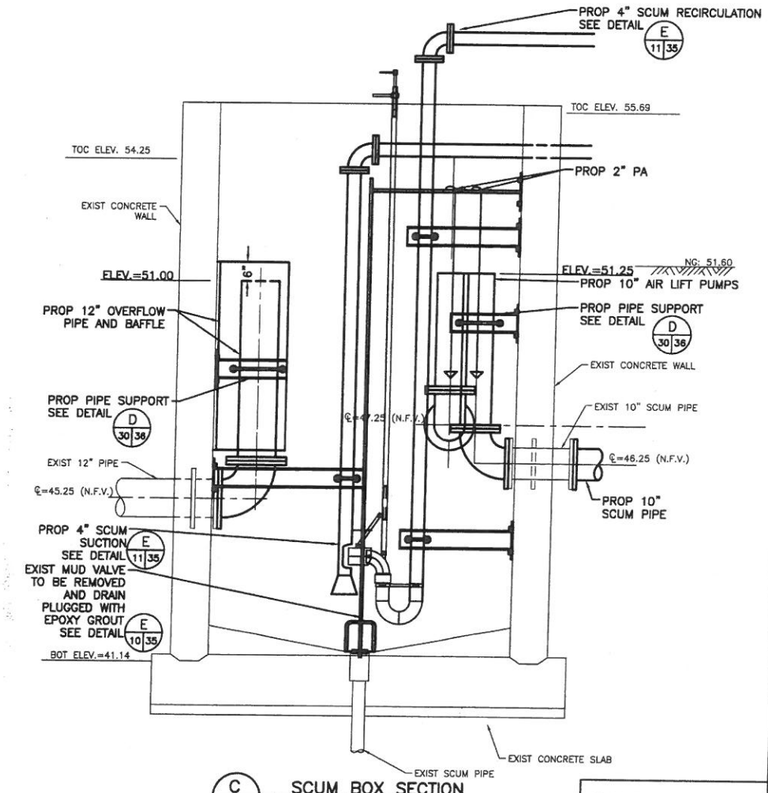

C 29 30 SCUM BOX SECTION
SCALE 1"=2'

DATE	REVISION	BY

STATE OF TEXAS
MELEDA SIERRA
98809
LICENSED
PROFESSIONAL ENGINEER
3/14/2013

LJA Engineering Inc.
2929 Briarpark Drive
Suite 600
Houston, Texas 77042
Phone 713.953.5200
Fax 713.953.5026
FRN - F-1386

SURVEYED BY: AMANI ENG. | FB NO.: P-5679

CITY OF HOUSTON
DEPARTMENT OF PUBLIC WORKS AND ENGINEERING

ALMEDA SIMS WWTP & SPF IMPROVEMENTS PACKAGE-3

CLARIFIER NO. 4
PROPOSED MECHANISM SECTIONS

WBS NUMBER	R-000298-0008-4
DRAWING SCALE	SCALE: AS SHOWN
CITY OF HOUSTON, PM	IRAJ RANJBAR, P.E.
SHEET NO.	30 OF 117

DWG: M-305

PROFESSIONAL ENGINEER 50151

ORIGINAL SCALE IN INCHES

\\Whou-0002a-fpa\ced\Projdsk1\2005\2011\PHASE II\30 Clarifier No4 Proposed Mechanism Section.dwg

30

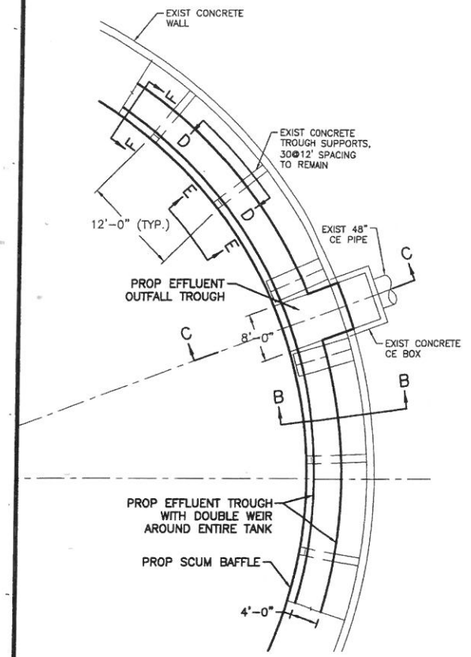

A 29|31 EFFLUENT TROUGH AT CLARIFIER EFFLUENT BOX
SCALE 1"=10'

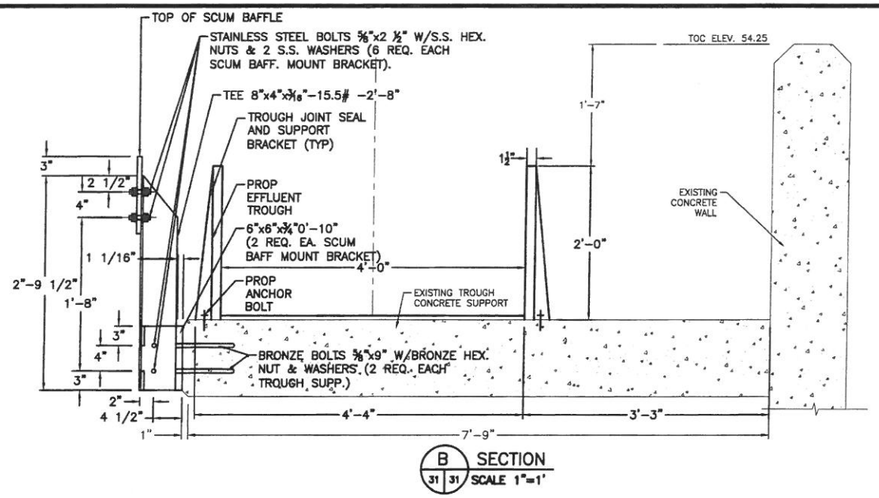

B 31|31 SECTION
SCALE 1"=1'

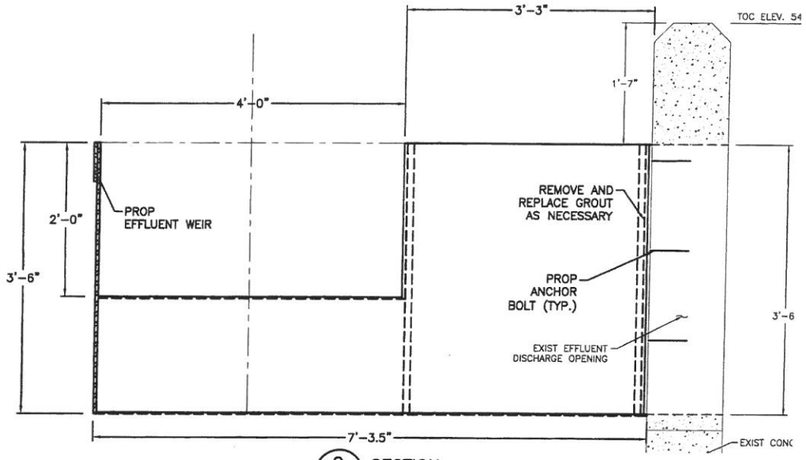

C 31|31 SECTION
SCALE 1"=1'

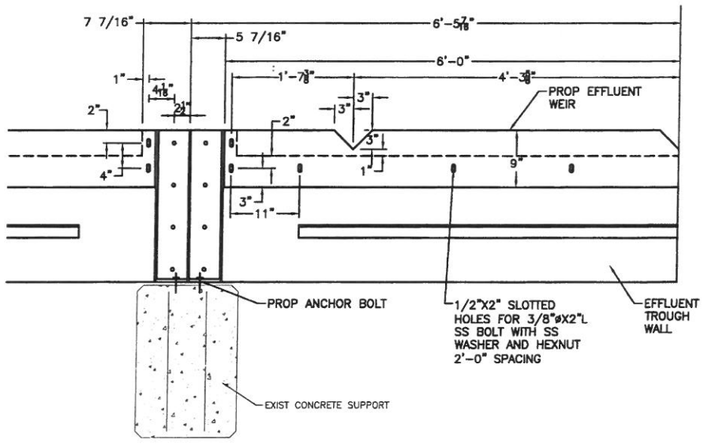

D 31|31 SECTION
SCALE 1"=1'

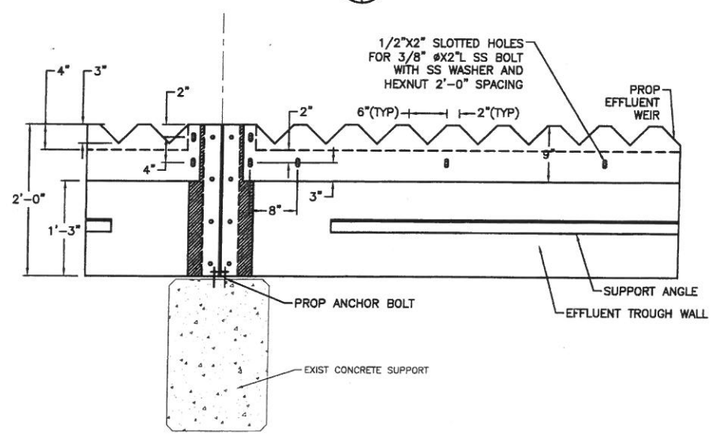

E 31|31 SECTION
SCALE 1"=1'

NOTES:

1. EFFLUENT TROUGH AND WEIR DESIGN INFORMATION IS TAKEN FROM DRAWINGS BY BINKLEY AND HOLMES, INC., DATED JUNE 1972.
2. PROPOSED CLARIFIER TROUGH, WEIR AND BAFFLES SHALL MATCH EXISTING SIZE, SPACING AND ELEVATIONS.
3. STRUCTURAL AND MECHANICAL FABRICATION OF EFFLUENT TROUGH AND WEIR PLATES IS THE MANUFACTURER'S RESPONSIBILITY.

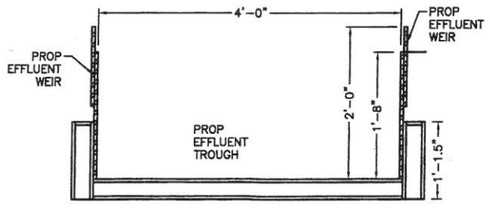

F 31|31 SECTION
SCALE 1"=1'

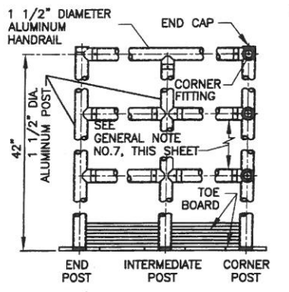

HORIZONTAL HANDRAIL CONNECTIONS
NTS

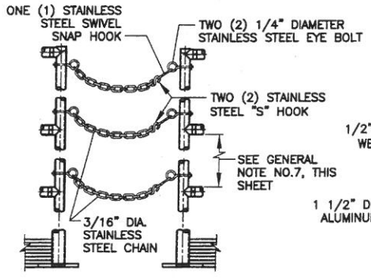

STAINLESS STEEL CHAIN DETAIL
NTS

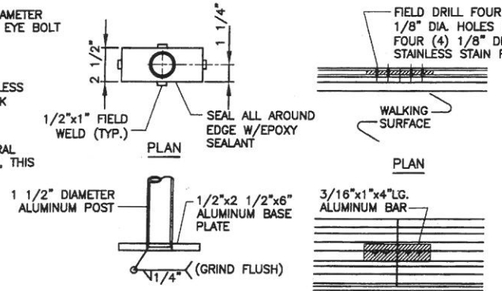

HORIZONTAL BASE MOUNTING DETAIL
NTS

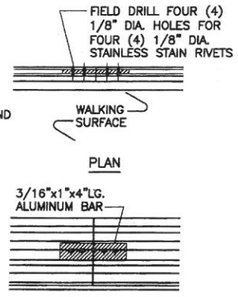

"Z" TOE BOARD FIELD JOINT DETAIL
NTS

G 30|31 HANDRAIL DETAIL
SCALE: N.T.S.

ALUMINUM HANDRAIL NOTES:

1. FITTINGS ATTACHED TO POST & HANDRAILS W/ (1) #17x1" LG. STAINLESS STEEL TEK-SCREW.
2. HANDRAILS ATTACHED TO FITTINGS W/TWO (2) 1/8" DIAMETER STAINLESS STEEL RIVETS.
3. ALL HANDRAILS WHEN PROPERLY INSTALLED SHALL MEET OR EXCEED OSHA REQUIREMENTS.
4. ALL HANDRAILS ARE TO BE OF MECHANICAL CONSTRUCTION (U.N.O.).
5. ALL HANDRAILS, POSTS AND COMPONENTS SHALL BE 6063-T6 AND/OR 6061-T6.
6. ALL FASTENERS SHALL BE STAINLESS STEEL.
7. ALL POSTS SHALL BE CUT TO LENGTH WITH FITTINGS AND MOUNTING PLATES ATTACHED (EXCEPT FOR TOP FITTINGS AT INTERMEDIATE POSTS).
8. ALL HANDRAILS AND POSTS SHALL BE 1 1/2 DIAMETER SCH. 40 ALUMINUM PIPE.
9. FINISH SHALL BE CLEAR ANODIZED (.7 MIL.).
10. MAXIMUM POST SPACING SHALL BE 6'-0" O.C.
11. ALUMINUM HANDRAIL SHALL BE INSTALLED AROUND ALL WALKWAYS, STAIRS, AND ACCESS AREAS.
12. ALUMINUM HANDRAIL TO BE INSTALLED INSIDE ACCESS BRIDGE TRUSS SUPPORT SYSTEM.

DATE	REVISION	BY

STATE OF TEXAS
MELISSA SIERRA
98809
LICENSED
PROFESSIONAL ENGINEER
3/18/2013

LJA Engineering Inc.
2929 Briarpark Drive
Suite 600
Houston, Texas 77042
Phone 713.953.5200
Fax 713.953.5026
FRN - F-1386

SURVEYED BY: AMANI ENG. | FB NO.: P-5679

CITY OF HOUSTON
DEPARTMENT OF PUBLIC WORKS AND ENGINEERING

ALMEDA SIMS WWTP & SPF IMPROVEMENTS PACKAGE-3

CLARIFIER NO. 4 PROPOSED MECHANISM DETAILS

WBS NUMBER	R-000298-0008-4
DRAWING SCALE	SCALE: AS SHOWN
CITY OF HOUSTON, PM	IRAJ RANJBAR, P.E.
SHEET NO.	31 OF 117

PUBLIC WORKS AND ENGINEERING
50431
CITY OF HOUSTON TEXAS

DWG: M-306

\\Wfnas--0002a--fp0\esd\Projdata1\2005\2011\PHASE II\31 Clarifier No4 Proposed Mechanism Details.dwg

31

ORIGINAL SCALE IN INCHES

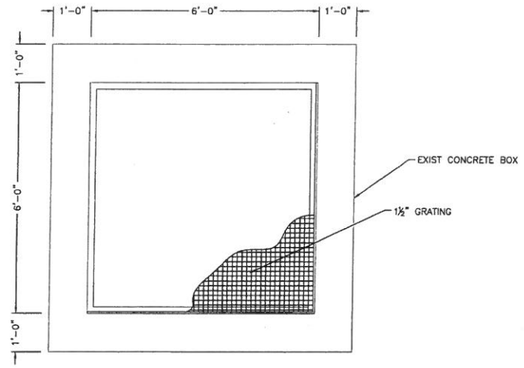

A 11 32 TOP PLAN VIEW
SCALE 1"=2'

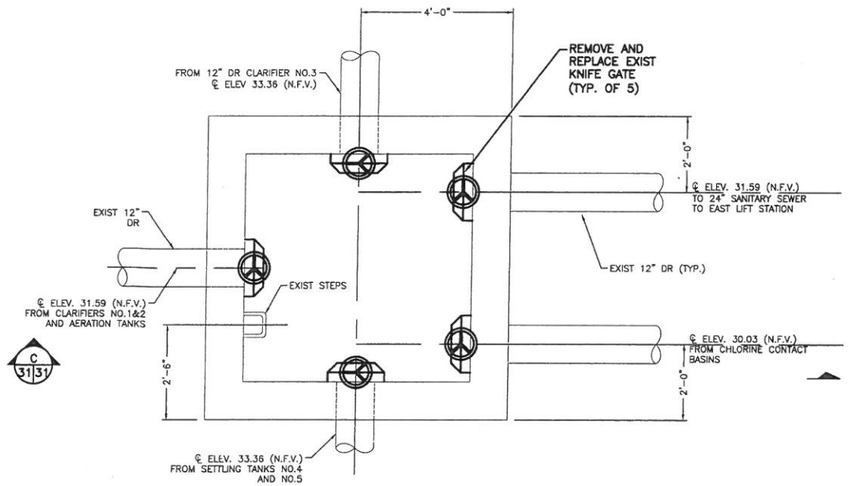

B 32 32 BOTTOM PLAN VIEW
SCALE 1"=2'

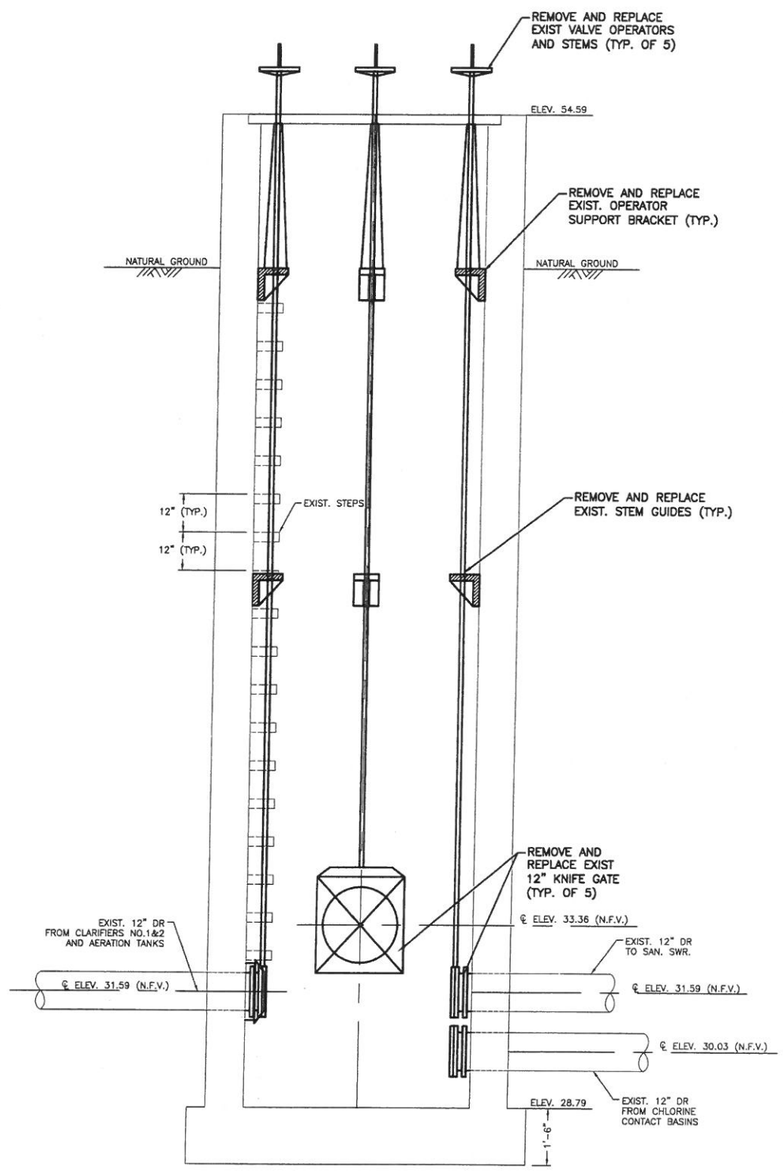

C 32 32 SECTION C
SCALE 1"=2'

DATE	REVISION	BY

STATE OF TEXAS
MELEDA SIERRA
96809
LICENSED PROFESSIONAL ENGINEER
3/18/2013

LJA Engineering Inc.
2929 Briarpark Drive
Suite 600
Houston, Texas 77042
Phone 713.953.5200
Fax 713.953.5026
FRN - F-1386

SURVEYED BY: AMANI ENG. | FB NO.: P-5679

CITY OF HOUSTON
DEPARTMENT OF PUBLIC WORKS AND ENGINEERING

ALMEDA SIMS WWTP & SPF IMPROVEMENTS PACKAGE-3

DRAIN BOX NO. 2 VALVE REPLACEMENT

WBS NUMBER
R-000298-0008-4
DRAWING SCALE
SCALE: 1" = 2'
CITY OF HOUSTON, PM
IRAJ RANJBAR, P.E.
SHEET NO. 32 OF 117

PUBLIC WORKS AND ENGINEERING
50431
CITY OF HOUSTON, TEXAS

DWG: M-401

32

\\Wmou-0002a-fpa\ced\Projdsk1\2005\2013\PHASE II\32 Drain Box No2 Valve Replacement.dwg

ORIGINAL SCALE IN INCHES

DEMOLITION NOTES:

1. REMOVE ALL EXISTING MECHANICAL AND ELECTRICAL EQUIPMENT, AND DEMOLISH CONCRETE STRUCTURE.
2. CONTRACTOR SHALL DISPOSE OF ALL EQUIPMENT AND DEBRIS, UNLESS THE CITY CHOOSES TO RETAIN ANY OF THE REMOVED MATERIAL.
3. REFILL AND COMPACT PIT AREA TO 95% STANDARD PROCTOR DENSITY PER A.S.T.M. D698, REGRADE TO MATCH EXISTING DRAINAGE PLAN AND HYDROMULCH SEED.
4. PLUG AND ABANDON SCUM PIPES UNDER GROUND PER SPECIFICATIONS.
5. DEMOLITION OF SCUM PUMP STATION SHALL NOT START UNTIL ALL PROPOSED SCUM PUMP ARE PUT INTO OPERATION.

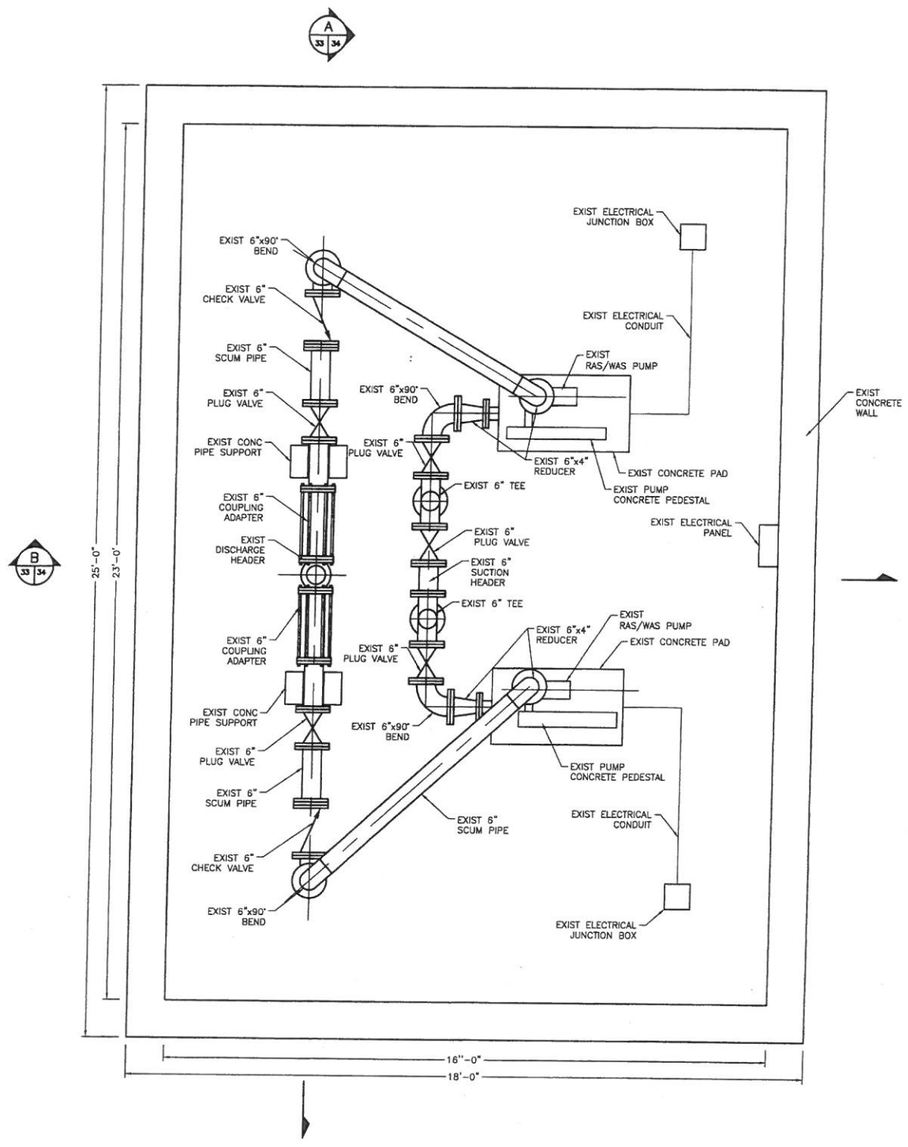

DATE	REVISION	BY

STATE OF TEXAS
MELEDA SIERRA
96809
LICENSED
PROFESSIONAL ENGINEER
9/18/2013

LJA Engineering Inc.
2929 Briarpark Drive
Suite 600
Houston, Texas 77042
Phone 713.953.5200
Fax 713.953.5026
FRN - F-1386

SURVEYED BY: AMANI ENG. | FB NO.: P-5679

CITY OF HOUSTON
DEPARTMENT OF PUBLIC WORKS AND ENGINEERING

ALMEDA SIMS WWTP & SPF IMPROVEMENTS PACKAGE-3

EXISTING SCUM PUMP STATION DEMOLITION PLAN

WBS NUMBER
R-000298-0008-4
DRAWING SCALE
SCALE: 1" = 2'
CITY OF HOUSTON, PM
IRAJ RANJBAR, P.E.
SHEET NO. 33 OF 117

PUBLIC WORKS & ENGINEERING
50431
HOUSTON, TEXAS

DWG: M-501

ORIGINAL SCALE IN INCHES

\\Whou-0002c-fps\cad\Projdat\2005\2013\PHASE II\33 Existing Scum Pump Station Demolition Plan.dwg

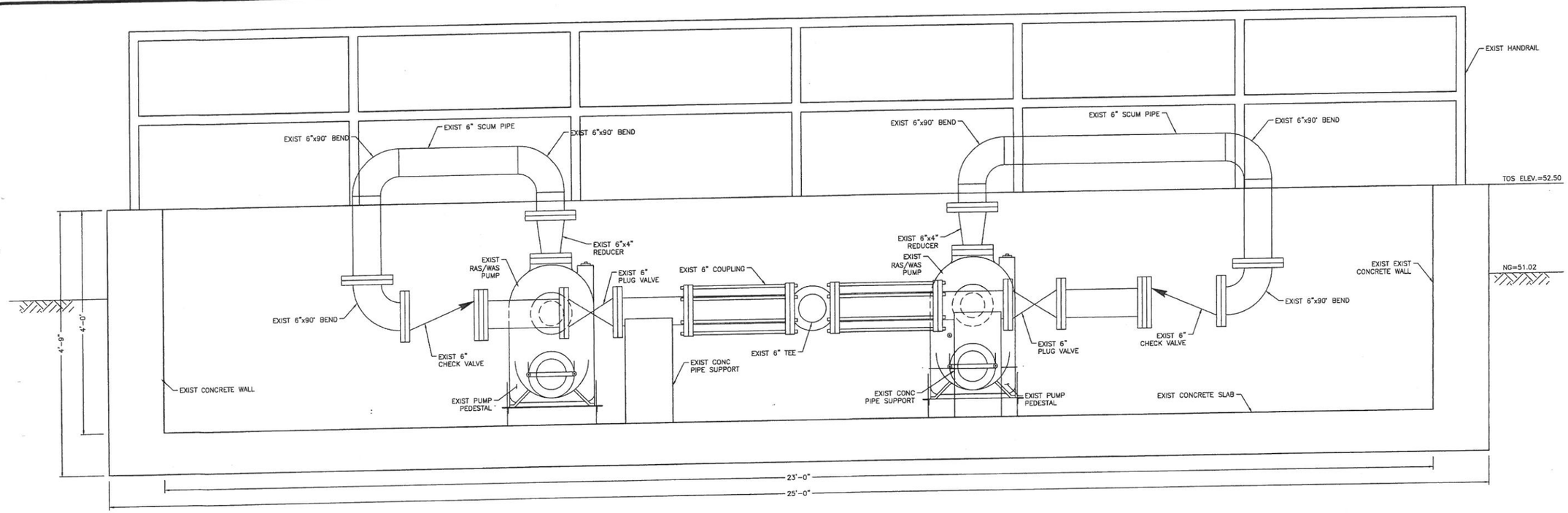

A 33 34 SCUM PUMP STATION SECTION
SCALE 1"=1'

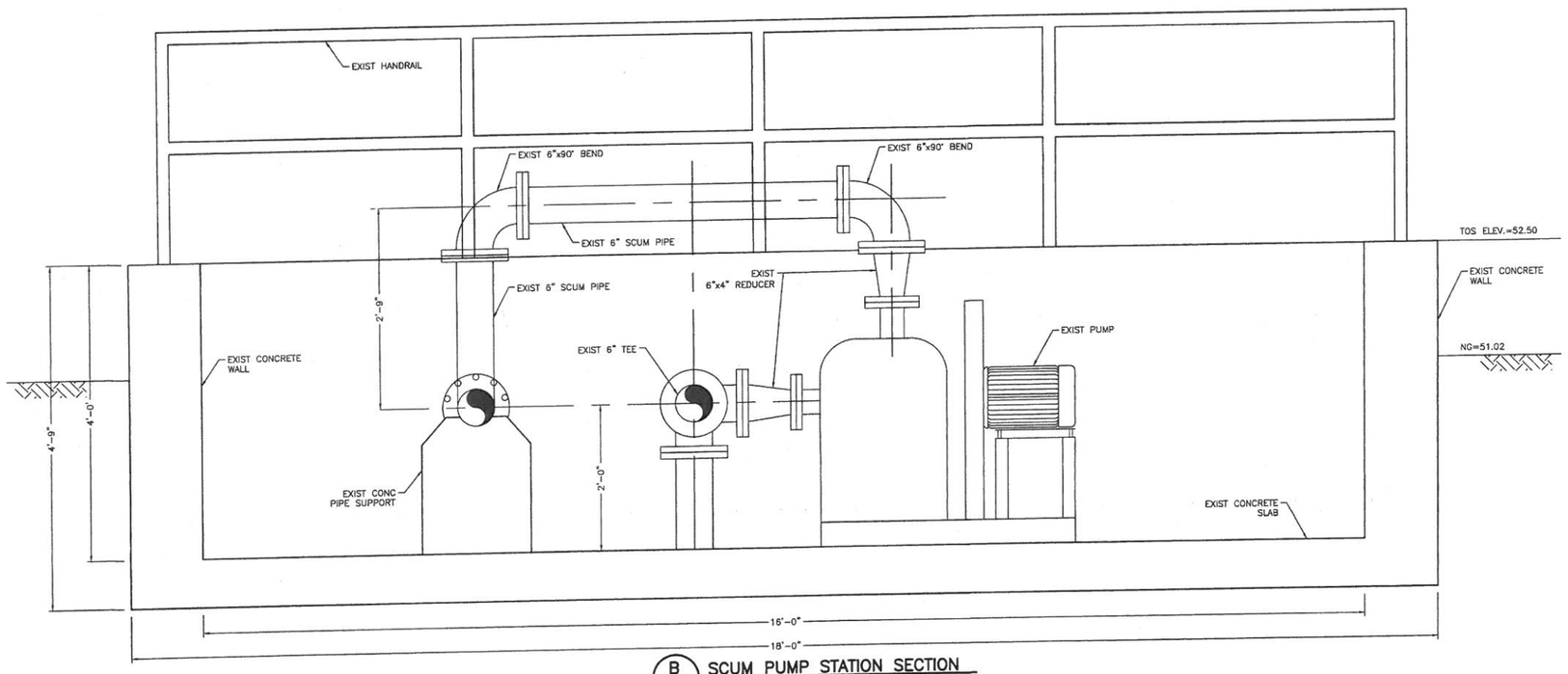

B 33 34 SCUM PUMP STATION SECTION
SCALE 1"=1'

DATE	REVISION	BY

STATE OF TEXAS
MELEDA SIERRA
95809
LICENSED
PROFESSIONAL ENGINEER
3/18/2013

LJA Engineering Inc.
2929 Briarpark Drive
Suite 600
Houston, Texas 77042
Phone 713.953.5200
Fax 713.953.5026
FRN - F-1386

SURVEYED BY: AMANI ENG. | FB NO.: P-5679

CITY OF HOUSTON
DEPARTMENT OF PUBLIC WORKS AND ENGINEERING

ALMEDA SIMS WWTP & SPF IMPROVEMENTS PACKAGE-3

EXISTING SCUM PUMP STATION DEMOLITION SECTIONS

WBS NUMBER
R-000298-0008-4
DRAWING SCALE
SCALE: 1" = 5'
CITY OF HOUSTON, PM
IRAJ RANJBAR, P.E.
SHEET NO. 34 OF 117

PUBLIC WORKS AND ENGINEERING
50431
CITY OF HOUSTON

DWG: M-502

ORIGINAL SCALE IN INCHES

\\Whou-0002a-fps\cad\Projdsk1\2005\2015\PHASE II\34 Existing Scum Pump Station Demolition Sections.dwg

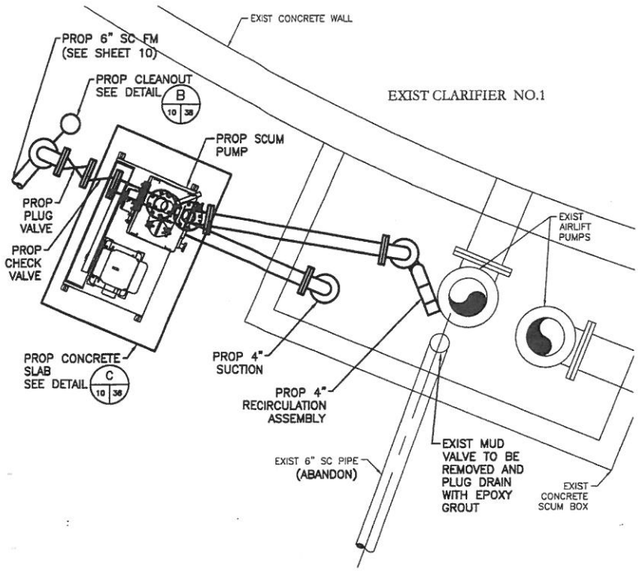

A 10 35 SCUM PUMP AT CLARIFIER NO.1
SCALE 1"=2'

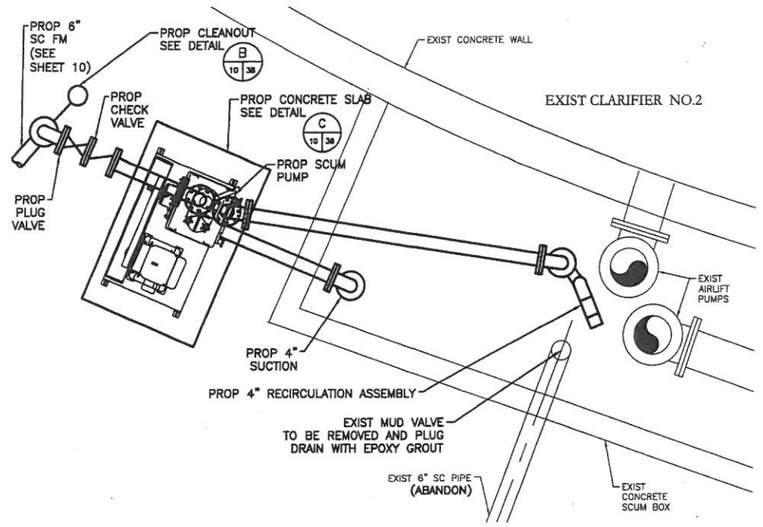

B 10 35 SCUM PUMP AT CLARIFIER NO.2
SCALE 1"=2'

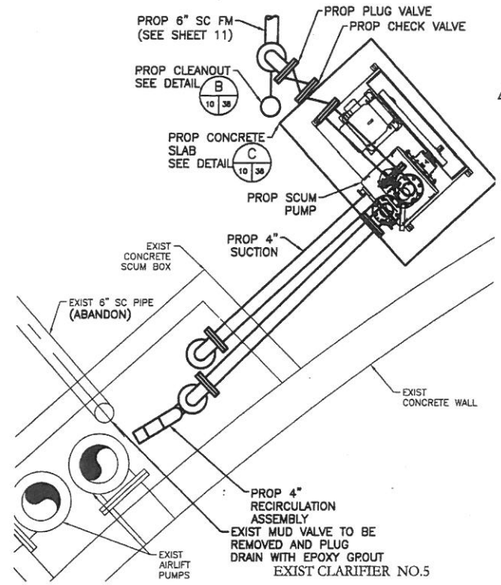

C 11 35 SCUM PUMP AT CLARIFIER NO.5
SCALE 1"=2'

NOTES:

1. SCUM PIT WORK TO BE DONE DURING SHUTDOWN OF CLARIFIER FOR CLARIFIER INFLUENT GATE REPLACEMENT.
2. PROPOSED SCUM PUMPS AND FORCE MAIN SHALL BE READY TO OPERATE PRIOR TO PUTTING ANY CLARIFIER BACK INTO SERVICE.
3. PIPING TO BE DUCTILE IRON WITH INTERIOR COATING PER THE SPECIFICATIONS.
4. ~~SPOOL PIECES TO BE 5' MINIMUM LENGTH.~~
5. REMOVE AND REPLACE EXISITNG OVERFLOW BAFFLE AND 12" PIPE AT CLARIFIERS NO. 1,2 AND 3. MATERIAL TO BE GALVANIZED STEEL AFTER FABRICATION.

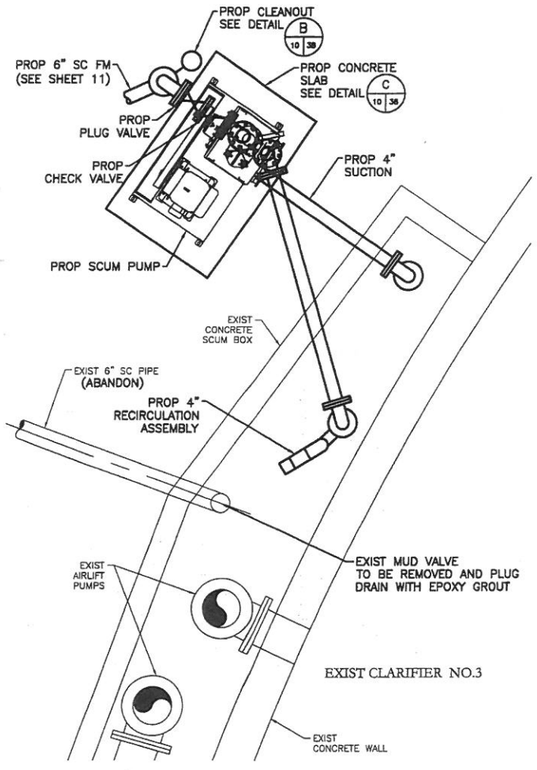

D 11 35 SCUM PUMP AT CLARIFIER NO.3
SCALE 1"=2'

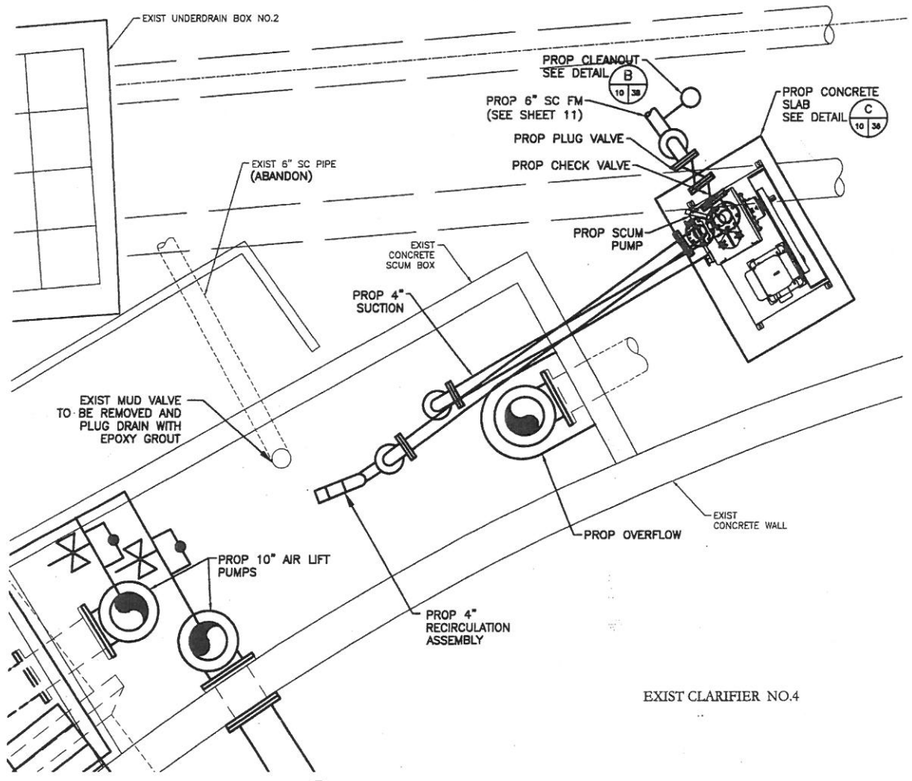

E 11 35 SCU PUMP AT CLARIFIER NO.4
SCALE 1"=2'

DATE	REVISION	BY
04/22/13	Notes Revision	M.S

STATE OF TEXAS — MELEDA SIERRA — 96809 — LICENSED PROFESSIONAL ENGINEER
3/18/2013

LJA Engineering Inc.
2929 Briarpark Drive
Suite 600
Houston, Texas 77042
Phone 713.953.5200
Fax 713.953.5026
FRN - F-1386

SURVEYED BY: AMANI ENG. | FB NO.: P-5679

CITY OF HOUSTON
DEPARTMENT OF PUBLIC WORKS AND ENGINEERING

ALMEDA SIMS WWTP & SPF IMPROVEMENTS PACKAGE-3

PROPOSED SCUM PUMPS PLAN

WBS NUMBER	R-000298-0008-4
DRAWING SCALE	SCALE: 1" = 2'
CITY OF HOUSTON, PM	IRAJ RANJBAR, P.E.
SHEET NO.	35 OF 117

DWG: M-503

PUBLIC WORKS AND ENGINEERING — 50431 — CITY OF HOUSTON — PUBLIC

ADDENDUM NO. 1

ORIGINAL SCALE IN INCHES

\\Whou-0002s-fpa\cad\Projekt\2005\201\PHASE II\35 Proposed Scum Pumps Plan.dwg

35

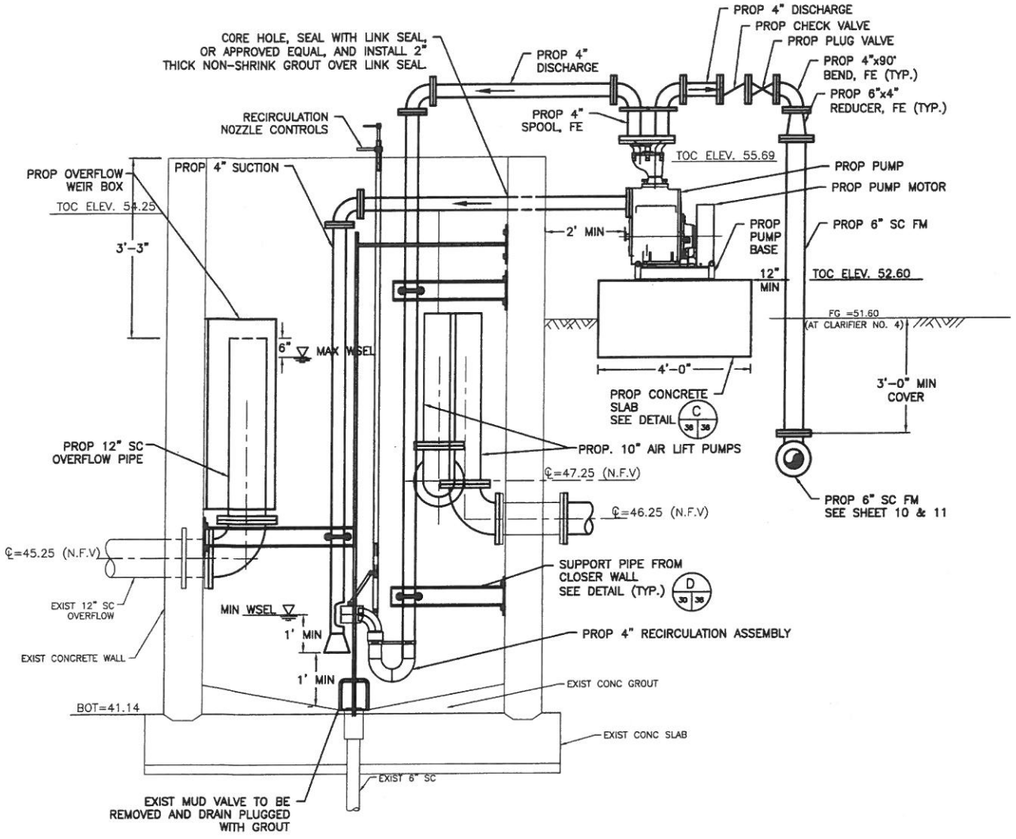

A 35 36 SCUM PUMP STATION ELEVATION
SCALE 1"=2'

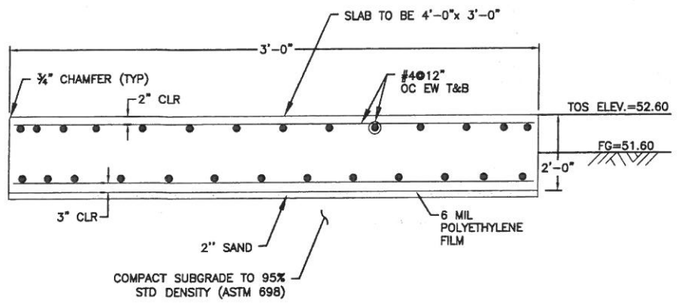

C 38 36 SCUM PUMP SLAB DETAIL
SCALE: N.T.S.

SINGLE PUMP PERFORMANCE CURVE

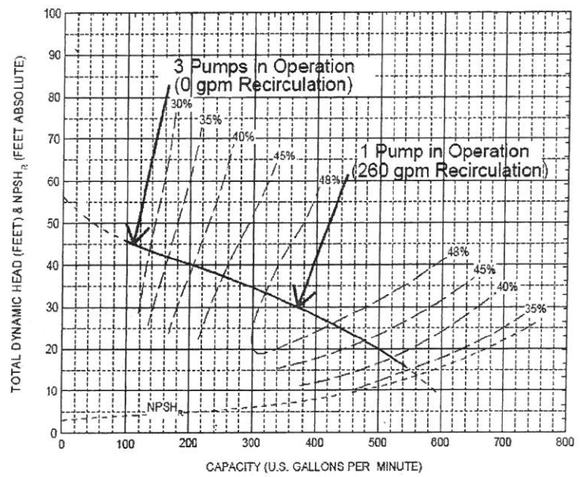

DESIGN BASED ON VAUGHAN SELF PRIMING CHOPPER PUMP MODEL SP4CD

PUMP(S) IN OPERATION	OPERATING CAPACITY		NOMINAL PUMP SPEED RPM	MINIMUM PUMP DISCHARGE SIZE	H.P.
	TOTAL GPM	T.D. HEAD IN FEET			
ONE PUMP ALONE	110	30	1460	4"	7.5
TWO PUMPS	220	35	1460	4"	7.5
THREE PUMPS	330	45	1460	4"	7.5

STATION OPERATION TABLES

RISING LEVEL CYCLE		
LIQUID LEVEL ELEVATION	ACTION	PUMP(S) IN OPERATION
43.14	PUMP OFF LEVEL – NO ACTION	PUMP OFF
50.50	PUMP TURNS ON	PUMP ON
51.00	HIGH LEVEL ALARM ON	HIGH LEVEL ALARM SOUND
FALLING LEVEL CYCLE		
LIQUID LEVEL ELEVATION	ACTION	PUMP(S) IN OPERATION
51.00	HIGH LEVEL ALARM OFF	PUMP ON
43.14	PUMP TURNS OFF	PUMP OFF

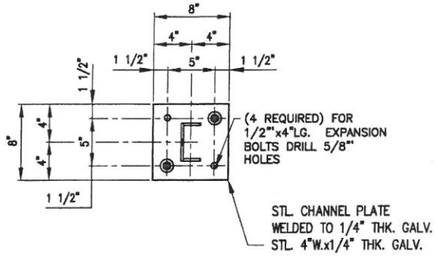

NOTE: HOT-DIP GALVANIZE AFTER FABRICATION.

FRONT ELEVATION

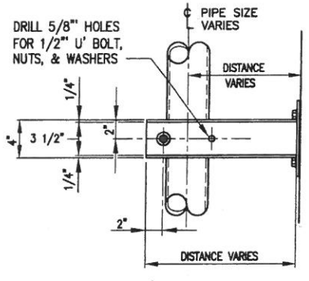

SIDE ELEVATION

D 30 36 PIPE SUPPORT DETAIL
SCALE: N.T.S.

DATE	REVISION	BY

STATE OF TEXAS
MELEDA SIERRA
96809
LICENSED PROFESSIONAL ENGINEER
3/18/2013

LJA Engineering Inc.
2929 Briarpark Drive
Suite 600
Houston, Texas 77042
Phone 713.953.5200
Fax 713.953.5026
FRN - F-1386

SURVEYED BY: AMANI ENG. | FB NO.: P-5679

CITY OF HOUSTON

DEPARTMENT OF PUBLIC WORKS AND ENGINEERING

ALMEDA SIMS WWTP & SPF IMPROVEMENTS PACKAGE-3

PROPOSED SCUM PUMPS ELEVATION

WBS NUMBER	R-000298-0008-4
DRAWING SCALE	SCALE: AS SHOWN
CITY OF HOUSTON, PM	IRAJ RANJBAR, P.E.
SHEET NO.	36 OF 117

PROFESSIONAL ENGINEER 80431

DWG: M-504

ORIGINAL SCALE IN INCHES

\\Whou-0002a-fps\coe\Projdat1\2005\2013\PHASE II\36 Proposed Scum Pumps Elevation.dwg, 3/18/2013 2:36:16 PM, Meleda Sierra

16

PIPE AND FITTING SCHEDULE		
ITEM	DESCRIPTION	CONNECTION
1	14"x6"x90° BEND	FE
2	6" SPOOL	FE
3	6"x90° BEND	FE
4	6" SPOOL	FE/MJ
5	6" 90° BEND	MJ/MJ

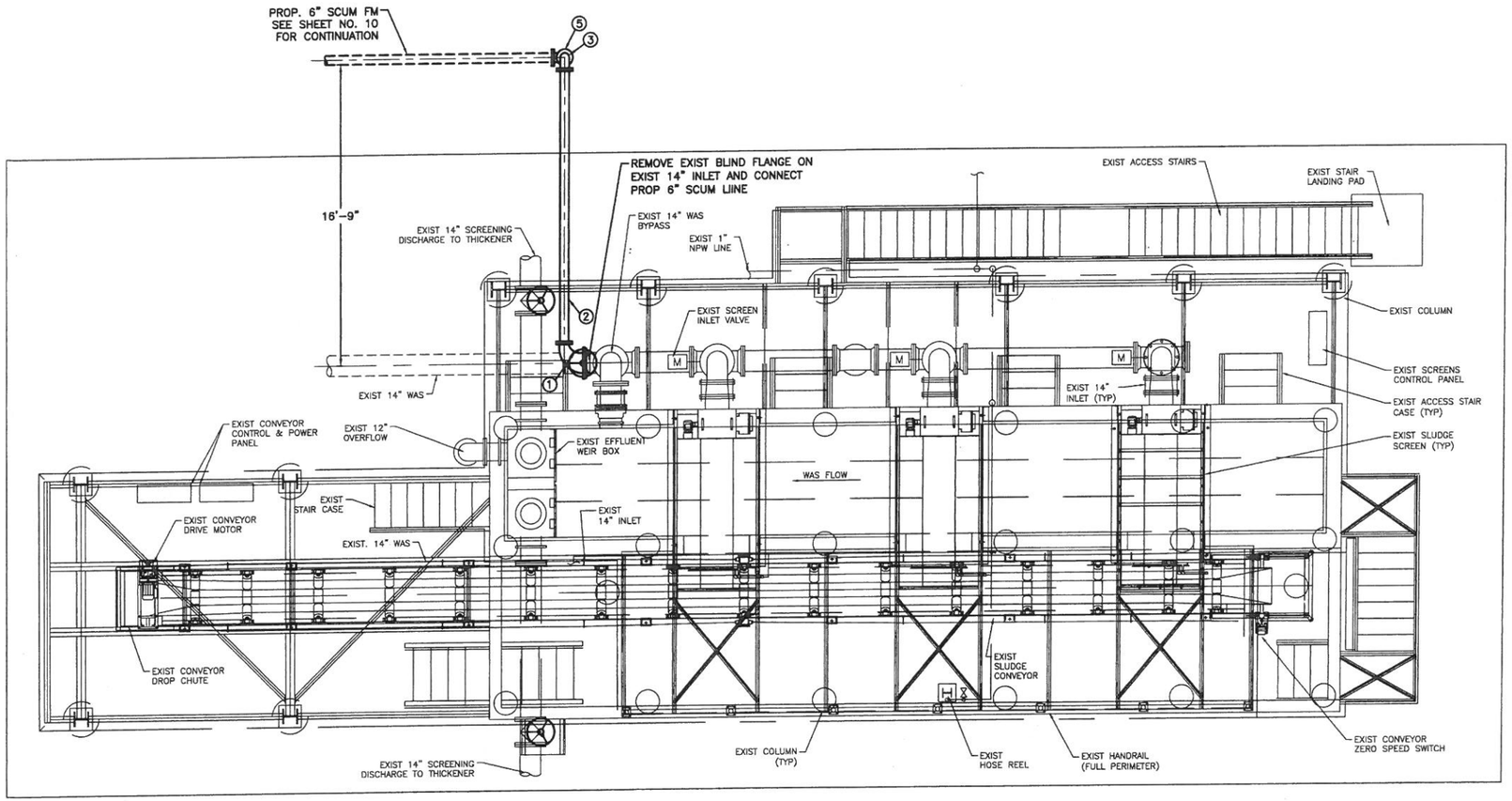

DATE	REVISION	BY

STATE OF TEXAS
MELEIDA SIERRA
96809
LICENSED PROFESSIONAL ENGINEER
5/8/2013

LJA Engineering Inc.
2929 Briarpark Drive
Suite 600
Houston, Texas 77042
Phone 713.953.5200
Fax 713.953.5026
FRN - F-1386

SURVEYED BY: AMANI ENG. | FB NO.: P-5679

CITY OF HOUSTON
DEPARTMENT OF PUBLIC WORKS AND ENGINEERING

ALMEDA SIMS WWTP & SPF IMPROVEMENTS PACKAGE-3

PROPOSED SCUM FORCEMAIN DISCHARGE PLAN

WBS NUMBER	
R-000298-0008-4	
DRAWING SCALE	
SCALE: 1"= 4'	
CITY OF HOUSTON, PM	
IRAJ RANJBAR, P.E.	
SHEET NO. 37 OF 117	

PUBLIC WORKS AND ENGINEERING
50431
CITY OF HOUSTON

DWG: M-505

ORIGINAL SCALE IN INCHES

\\Whou-0002a-fpa\cad\Projdsk1\2005\201\PHASE II\37 Scum Forcemain Discharge Plan.dwg

37

PIPE AND FITTING SCHEDULE		
ITEM	DESCRIPTION	CONNECTION
1	14"x6"x90° BEND	FE
2	6" SPOOL	FE
3	6"x90° BEND	FE
4	6" SPOOL	FE/MJ
5	6" 90° BEND	MJ/MJ

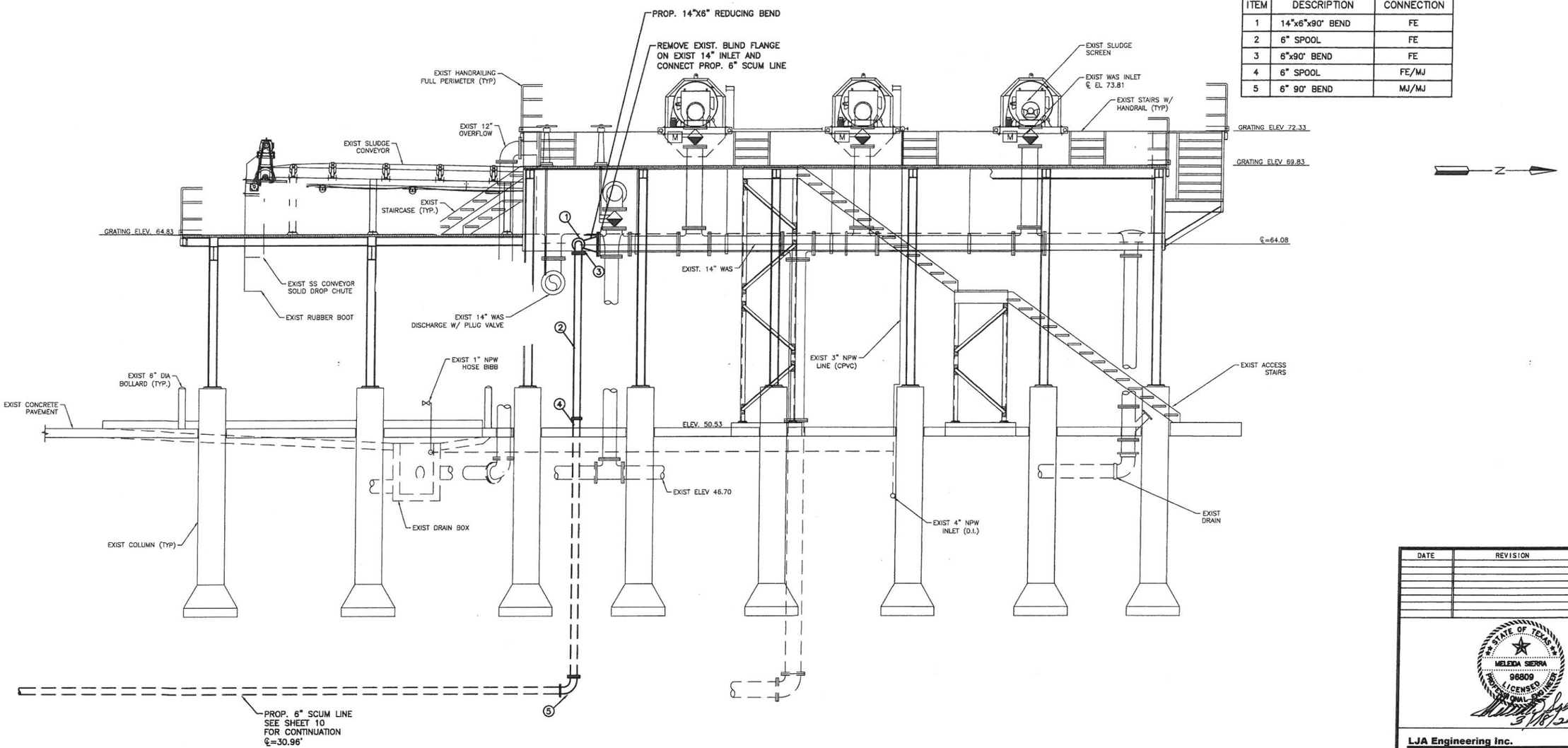

A 10 38 ELEVATION
SCALE 1"=4'

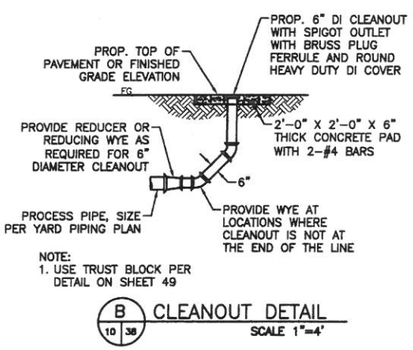

NOTE:
1. USE TRUST BLOCK PER DETAIL ON SHEET 49

B 10 38 CLEANOUT DETAIL
SCALE 1"=4'

DATE	REVISION	BY

STATE OF TEXAS
MELIDA SIERRA
96809
LICENSED PROFESSIONAL ENGINEER
5/16/2013

LJA Engineering Inc.
2929 Briarpark Drive
Suite 600
Houston, Texas 77042
Phone 713.953.5200
Fax 713.953.5026
FRN - F-1386

SURVEYED BY: AMANI ENG. | FB NO.: P-5679

CITY OF HOUSTON
DEPARTMENT OF PUBLIC WORKS AND ENGINEERING

ALMEDA SIMS WWTP & SPF IMPROVEMENTS PACKAGE-3

PROPOSED SCUM FORCEMAIN DISCHARGE ELEVATION

WBS NUMBER	R-000298-0008-4
DRAWING SCALE	SCALE: AS SHOWN
CITY OF HOUSTON, PM	IRAJ RANJBAR, P.E.
SHEET NO.	38 OF 117

PUBLIC WORKS AND ENGINEERING
50431
CITY OF HOUSTON TEXAS

DWG: M-506

ORIGINAL SCALE IN INCHES

\\hou-00029-fpa\cad\Projdsk1\2009\2011\PHASE II\38 Scum Forcemain Elevation.dwg

NOTES:

1. CONTRACTOR SHALL DISPOSE OFF SITE ALL REMOVED MATERIALS AND EQUIPMENT.
2. CONTRACTOR SHALL COORDINATE DEMOLITION WORK WITH PLANT OPERATOR.
3. DEMOLITION OF AERATION SYSTEM IN EFFLUENT BOX SHALL BE PLANNED TO NOT AFFECT REQUIRED EFFLUENT QUALITY.
4. CONTRACTOR MAY NEED TO SHUTDOWN THE PLANT AND DRAIN THE CE DISTRIBUTION CHANNEL BY PUMPING TO PERFORM DEMOLITION WORK IN THIS TANK. COORDINATE THE PLANT SHUTDOWN AND DRAINING THE BASINS WITH THE PLANT OPERATOR. MAXIMUM PLANT SHUT DOWN TIME TO BE 6 HOURS.

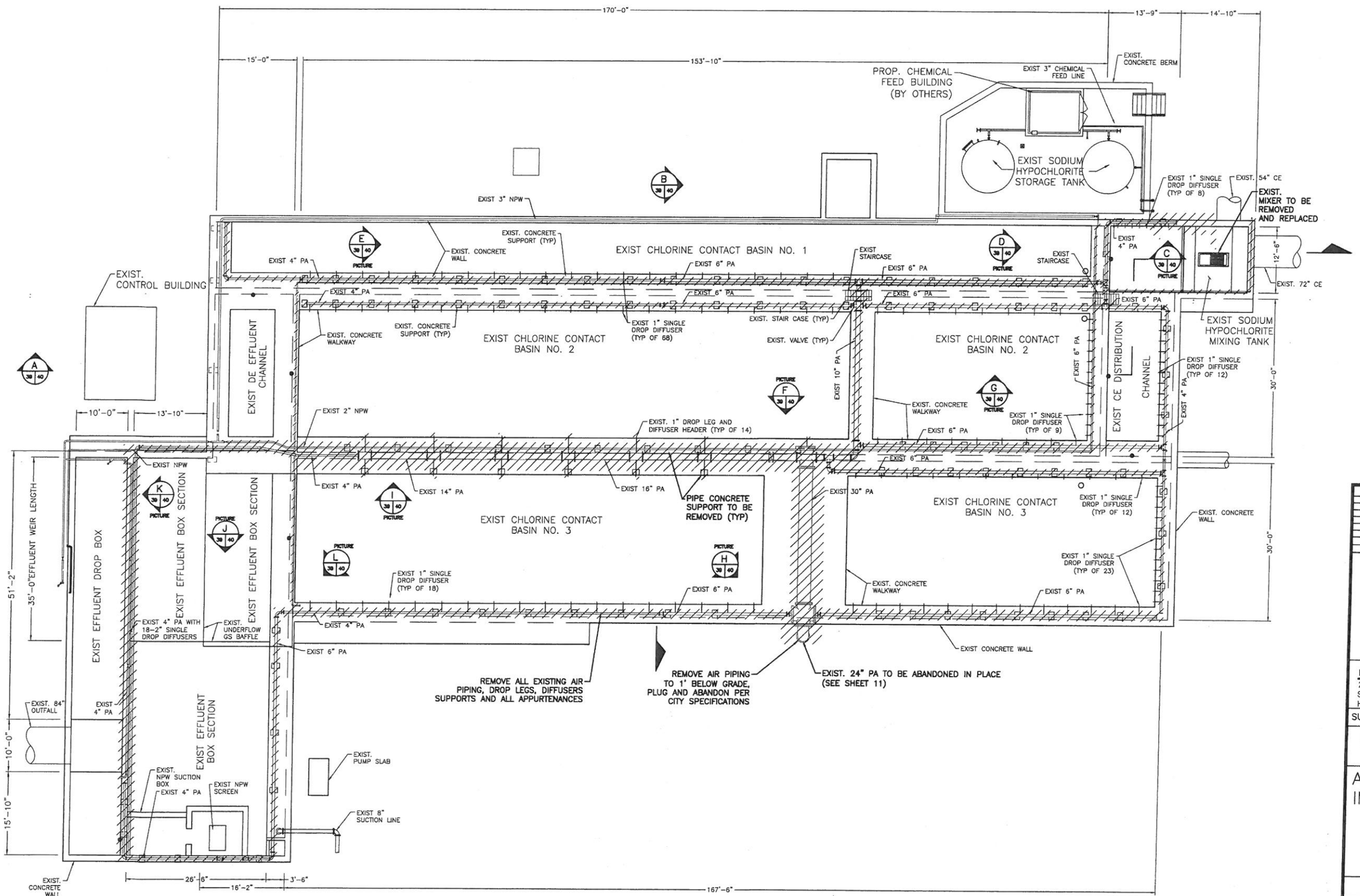

DATE	REVISION	BY

STATE OF TEXAS
HELEN A. SIERRA
96809
LICENSED PROFESSIONAL ENGINEER
3/18/2013

LJA Engineering Inc.
2929 Briarpark Drive
Suite 600
Houston, Texas 77042
Phone 713.953.5200
Fax 713.953.5026
FRN - F-1386

SURVEYED BY: AMANI ENG. | FB NO.: P-5679

CITY OF HOUSTON
DEPARTMENT OF PUBLIC WORKS AND ENGINEERING

ALMEDA SIMS WWTP & SPF IMPROVEMENTS PACKAGE-3

EXISTING CHLORINE CONTACT BASIN DEMOLITION PLAN

WBS NUMBER	R-000298-0008-4
DRAWING SCALE	SCALE: 1" = 10'
CITY OF HOUSTON, PM	IRAJ RANJBAR, P.E.
SHEET NO.	39 OF 117

PROFESSIONAL ENGINEER 50431

DWG: M-601

\\Wrau-0002a-fs\cad\Projekt\2005\2011\PHASE II\39 Existing Chlorine Contact Basin Demolition Plan.dwg

39

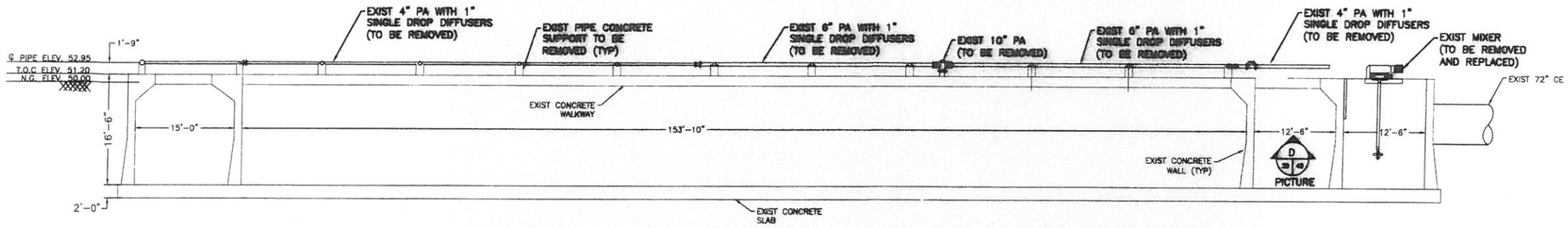

A 39 40 SECTION
SCALE 1"=10'

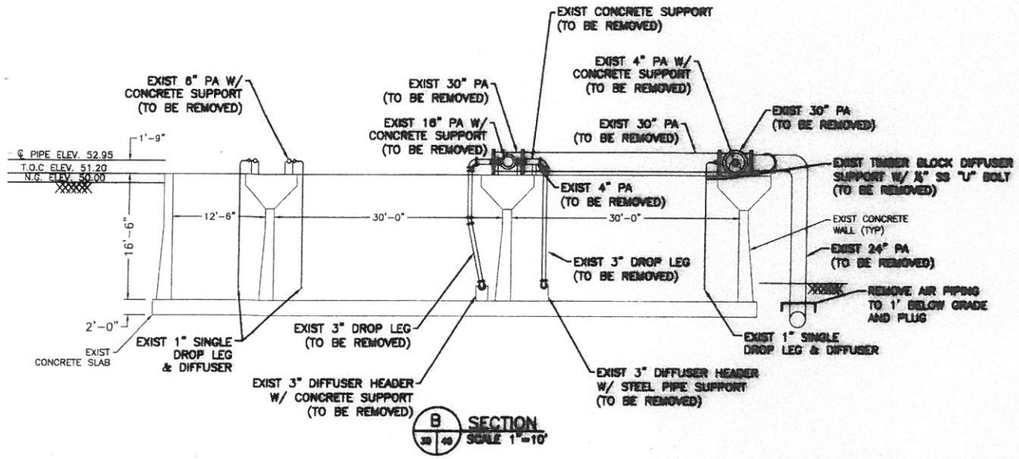

B 39 40 SECTION
SCALE 1"=10'

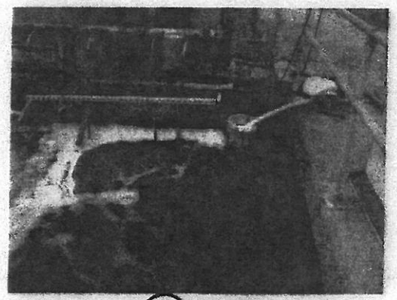

C 39 40 PICTURE

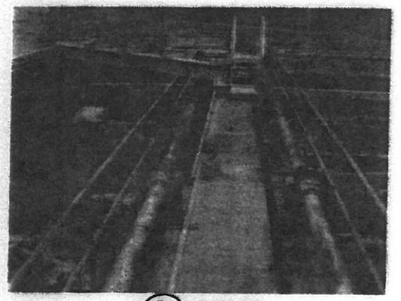

D 39 40 PICTURE

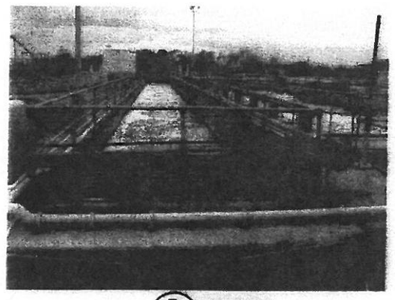

E 39 40 PICTURE

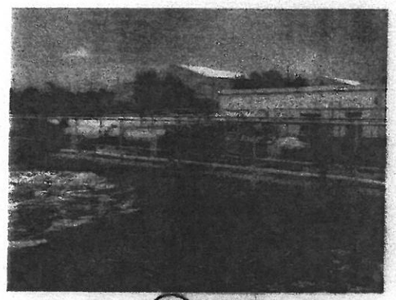

F 39 40 PICTURE

G 39 40 PICTURE

H 39 40 PICTURE

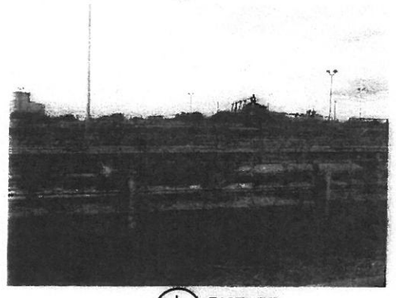

I 39 40 PICTURE

J 39 40 PICTURE

K 39 40 PICTURE

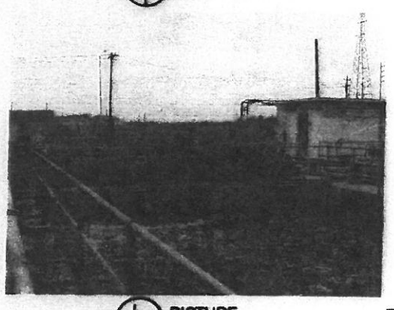

L 39 40 PICTURE

DATE	REVISION	BY

STATE OF TEXAS
MELISSA SIMS
90580
LICENSED
PROFESSIONAL ENGINEER
3/8/2013

LJA Engineering Inc.
2929 Briarpark Drive
Suite 600
Houston, Texas 77042
Phone 713.953.5200
Fax 713.953.5026
FRN - F-1386

SURVEYED BY: AMANI ENG. | FB NO.: P-5679

CITY OF HOUSTON
DEPARTMENT OF PUBLIC WORKS AND ENGINEERING

ALMEDA SIMS WWTP & SPF IMPROVEMENTS PACKAGE-3

EXISTING CHLORINE CONTACT BASIN DEMOLITION ELEVATION

WBS NUMBER
R-000298-0008-4
DRAWING SCALE
SCALE: 1" = 10'
CITY OF HOUSTON, PM
IRAJ RANJBAR, P.E.
SHEET NO. 40 OF 117

PUBLIC WORKS & ENGINEERING
50431
REGISTERED
PROFESSIONAL
ENGINEER

DWG: M-602

\\Whou-0002a-fpr\cost\Projects\2005\2011\PHASE II\40 Chlorine Contact Basin Demolition Elevation.dwg

40

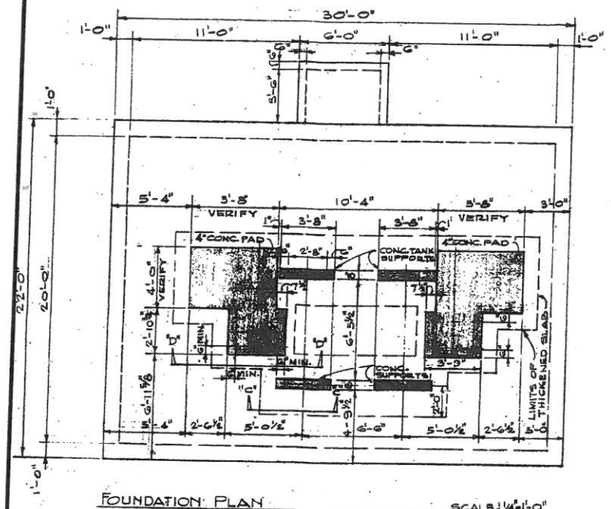

FOUNDATION PLAN SCALE: 1/4"=1'-0"

NOTE: VERIFIFY CONC. PAD DIM. & ANCHOR SIZE & LOCATIONS WITH MFG. RECOMENDATIONS FOR BLOWERS & MOTORS.

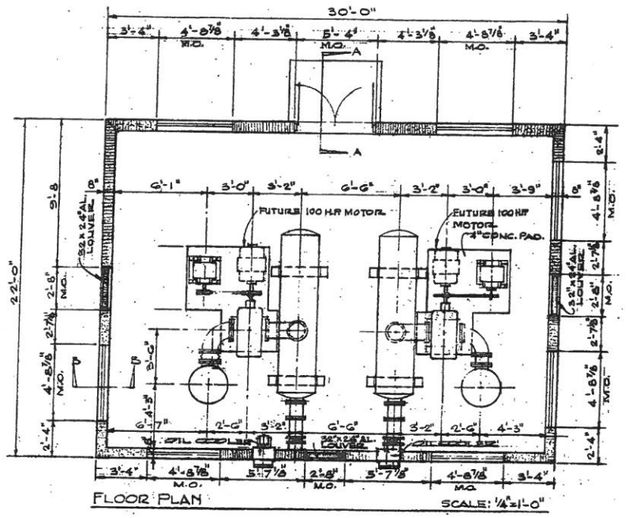

FLOOR PLAN SCALE: 1/8"=1'-0"

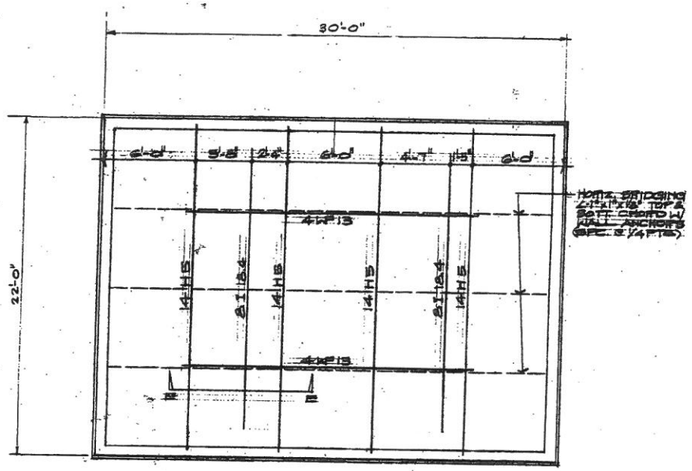

ROOF PLAN SCALE: 1/4"=1'-0"

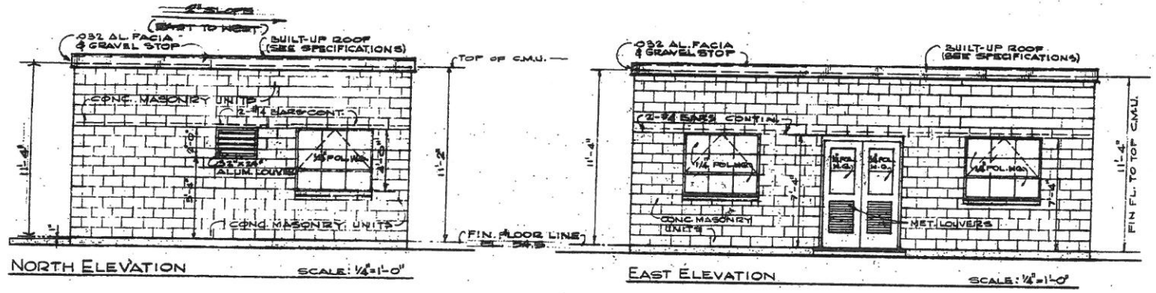

NORTH ELEVATION SCALE: 1/8"=1'-0"

EAST ELEVATION SCALE: 1/8"=1'-0"

SCALE: 1" = 5'-0

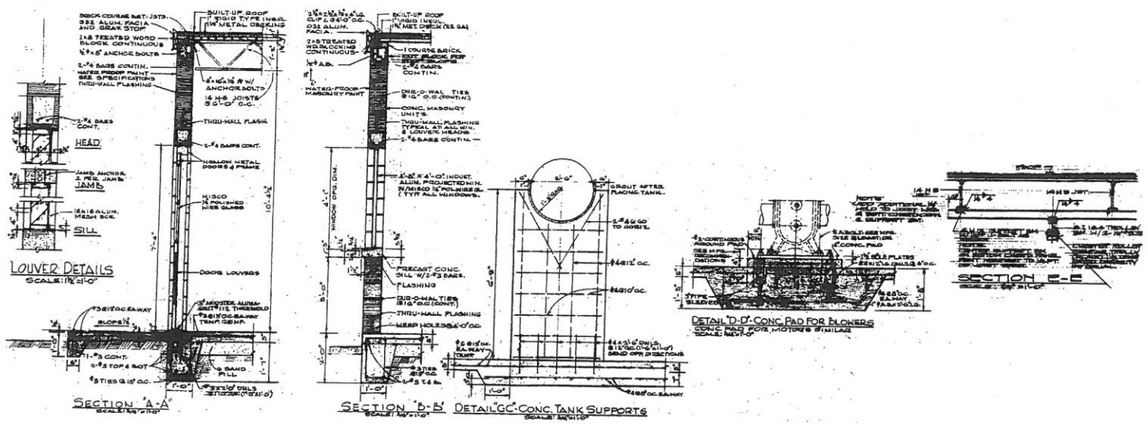

SCALE: 1" = 3'-0

DEMOLITION NOTES

1. REMOVE ALL EXISTING BLOWER MECHANICAL AND ELECTRICAL EQUIPMENT, AND DEMOLISH BUILDING INCLUDING CONCRETE FOUNDATIONS.
2. CONTRACTOR SHALL DISPOSE OF ALL EQUIPMENT AND DEBRIS, UNLESS THE CITY CHOOSES TO RETAIN ANY OF THE REMOVED MATERIAL.
3. SITE AREA WHERE THE BLOWER BUILDING IS LOCATED SHALL BE REFILLED AND COMPACTED TO 95% STANDARD PROCTOR DENSITY PER A.S.T.M. D698, REGRADED PER PROPOSED SITE PLAN AND HYDROMULCH SEEDED

DATE	REVISION	BY

STATE OF TEXAS — MELISSA SIERRA — 96809 — LICENSED PROFESSIONAL ENGINEER
3/15/2013

LJA Engineering Inc.
2929 Briarpark Drive
Suite 600
Houston, Texas 77042
Phone 713.953.5200
Fax 713.953.5026
FRN - F-1386

SURVEYED BY: AMANI ENG. FB NO.: P-5679

CITY OF HOUSTON

DEPARTMENT OF PUBLIC WORKS AND ENGINEERING

ALMEDA SIMS WWTP & SPF IMPROVEMENTS PACKAGE-3

EXISTING BLOWER BUILDING DEMOLITION 1 OF 2

WBS NUMBER	R-000298-0008-4
DRAWING SCALE	SCALE: N.T.S.
CITY OF HOUSTON, PM	IRAJ RANJBAR, P.E.
SHEET NO.	41 OF 117

PUBLIC WORKS & ENGINEERING — 50431 — CITY OF HOUSTON, TEXAS

DWG: M-603

\\Whou-0002a-fpk\cad\Projects\2005\2011\PHASE II\41 Proposed Blower Building Demolition 1 of 2.dwg

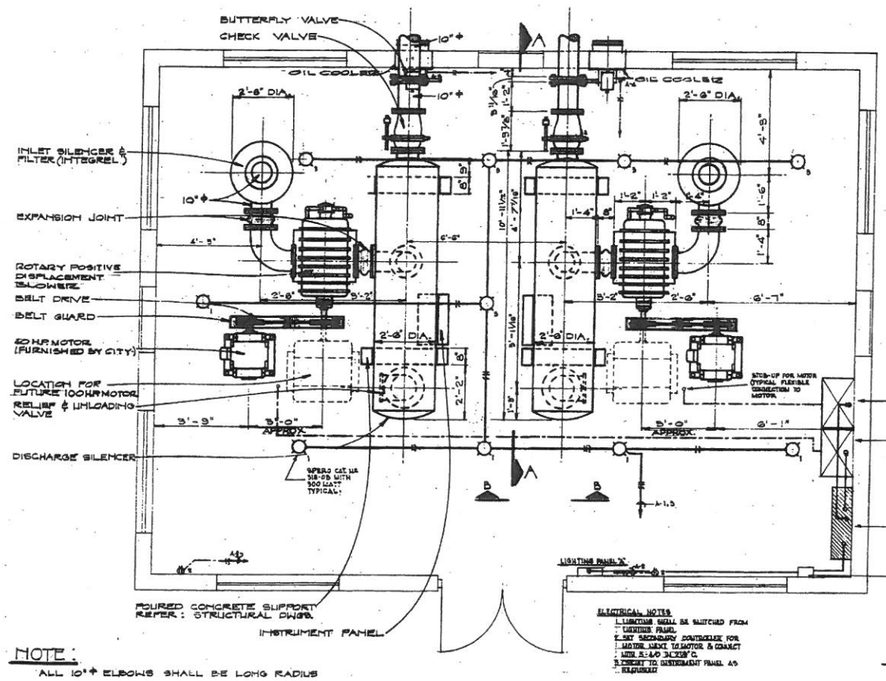

FLOOR PLAN

SCALE: 1/2" = 1'-0"

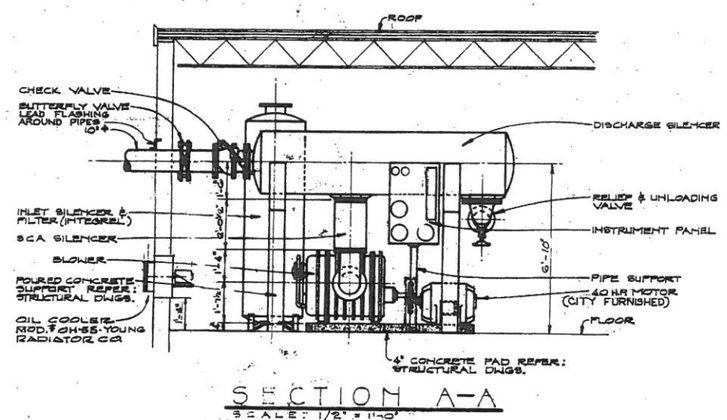

SECTION A-A

SCALE: 1/2" = 1'-0"

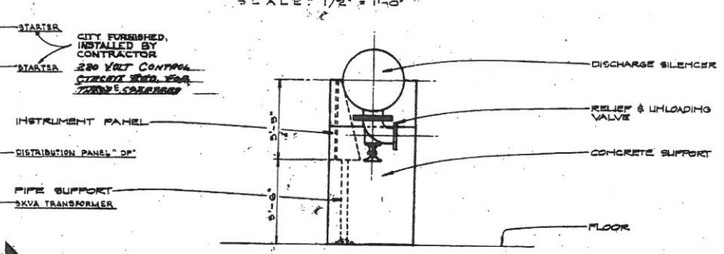

SECTION B-B

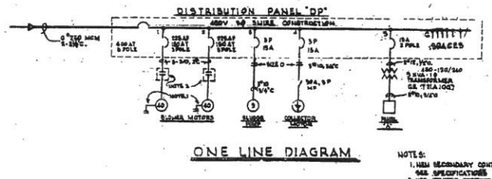

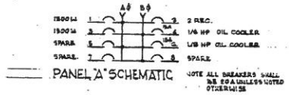

DEMOLITION NOTES

1. REMOVE ALL EXISTING BLOWER MECHANICAL AND ELECTRICAL EQUIPMENT, AND DEMOLISH BUILDING INCLUDING CONCRETE FOUNDATIONS.
2. CONTRACTOR SHALL DISPOSE OF ALL EQUIPMENT AND DEBRIS, UNLESS THE CITY CHOOSES TO RETAIN ANY OF THE REMOVED MATERIAL.
3. SITE AREA WHERE THE BLOWER BUILDING IS LOCATED SHALL BE REFILLED AND COMPACTED TO 95% STANDARD PROCTOR DENSITY PER A.S.T.M. D698, REGRADED PER PROPOSED SITE PLAN AND HYDROMULCH SEEDED

DATE	REVISION	BY

HELENA SIERRA 96809 LICENSED PROFESSIONAL ENGINEER STATE OF TEXAS
3/18/2013

LJA Engineering Inc.
2929 Briarpark Drive
Suite 600
Houston, Texas 77042
Phone 713.953.5200
Fax 713.953.5026
FRN - F-1386

SURVEYED BY: AMANI ENG. | FB NO.: P-5679

CITY OF HOUSTON
DEPARTMENT OF PUBLIC WORKS AND ENGINEERING

ALMEDA SIMS WWTP & SPF IMPROVEMENTS PACKAGE-3

EXISTING BLOWER BUILDING DEMOLITION
2 OF 2

WBS NUMBER	R-000298-0008-4
DRAWING SCALE	PLAN: N.T.S.
CITY OF HOUSTON, PM	IRAJ RANJBAR, P.E.
SHEET NO.	42 OF 117

50491 LICENSED PROFESSIONAL ENGINEER HOUSTON, TEXAS

DWG: M-604

\\Whou-0002a-fpa\coa\Projdesk1\2005\2011\PHASE IV\42 Proposed Blower Building Demolition 2 of 2.dwg

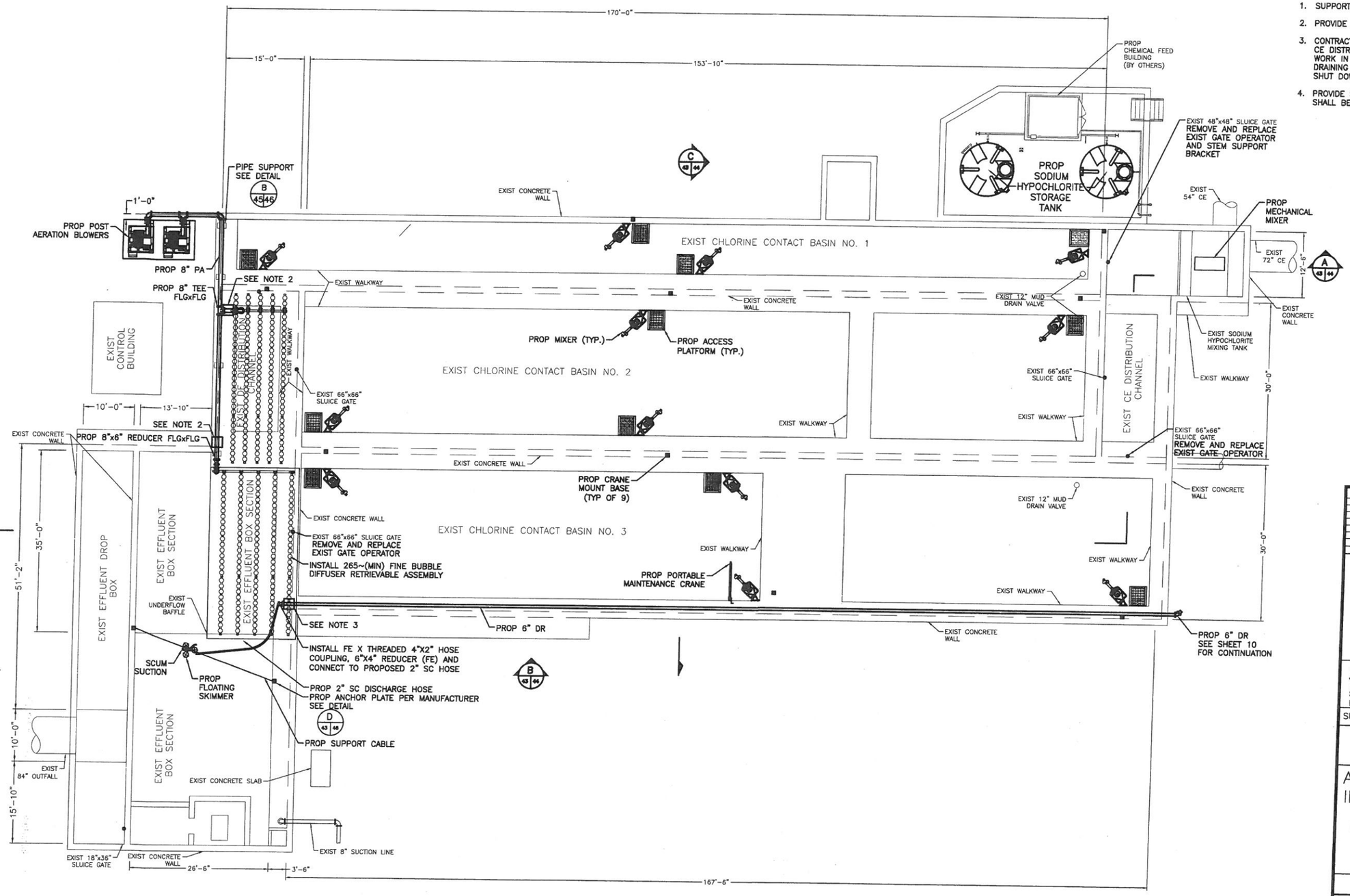

NOTES:

1. SUPPORT PIPES ON WALKWAY WITH ADJUSTABLE PIPE SUPPORT.
2. PROVIDE ACCESS STEP ON PIPING ON WALKWAY.
3. CONTRACTOR MAY NEED TO SHUTDOWN THE PLANT AND DRAIN THE CE DISTRIBUTION CHANNEL BY PUMPING TO PERFORM DEMOLITION WORK IN THIS TANK. COORDINATE THE PLANT SHUTDOWN AND DRAINING THE BASINS WITH THE PLANT OPERATOR. MAXIMUM PLANT SHUT DOWN TIME TO BE 6 HOURS.
4. PROVIDE SODIUM BISULFITE PUMP RATED AT 32 LPH. THE PUMP SHALL BE DIAPHRAGM TYPE, 3ø AND 120V.

NOTE:

PROVIDE THREE EXTRA SET OF ANCHOR PLATES FOR BASIN

DATE	REVISION	BY

STATE OF TEXAS
MELEDA SIERRA
96809
LICENSED PROFESSIONAL ENGINEER
3/14/2013

LJA Engineering Inc.
2929 Briarpark Drive
Suite 600
Houston, Texas 77042
Phone 713.953.5200
Fax 713.953.5026
FRN - F-1386

SURVEYED BY: AMANI ENG. | FB NO.: P-5679

CITY OF HOUSTON
DEPARTMENT OF PUBLIC WORKS AND ENGINEERING

ALMEDA SIMS WWTP & SPF IMPROVEMENTS PACKAGE-3

PROPOSED CHLORINE CONTACT BASIN IMPROVEMENT PLAN

WBS NUMBER	R-000298-0008-4
DRAWING SCALE	SCALE: 1" = 10'
CITY OF HOUSTON, PM	IRAJ RANJBAR, P.E.
SHEET NO.	43 OF 117

DWG: M-605

80431
HOUSTON, TEXAS

\\Whou-002fs-fpa\coa\Projekt\2005\2011\PHASE II\43 Proposed Chlorine Contact Basin Improvement Plan.dwg

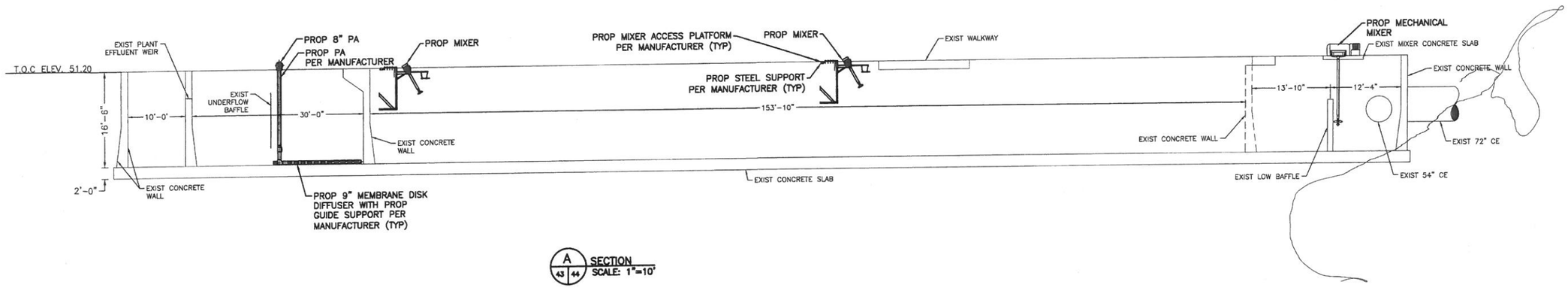

A 43 44 SECTION
SCALE: 1"=10'

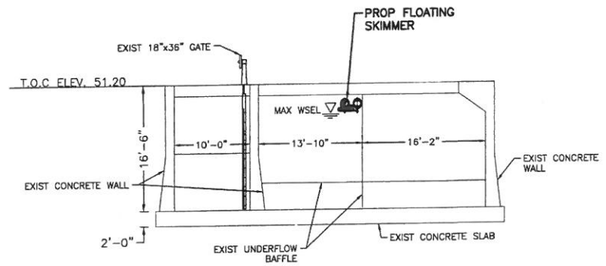

B 43 44 SECTION
SCALE: 1"=10'

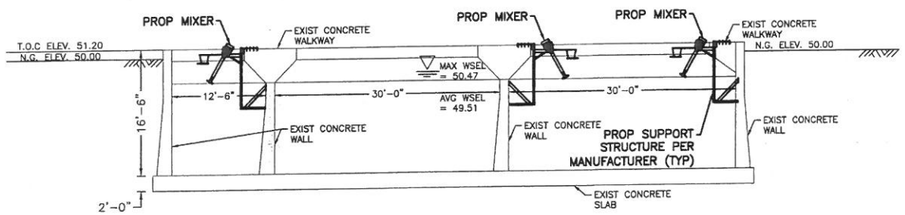

C 43 44 SECTION
SCALE: 1"=10'

DATE	REVISION	BY

STATE OF TEXAS
MELEDA SIERRA
96809
LICENSED PROFESSIONAL ENGINEER
3/14/2013

LJA Engineering Inc.
2929 Briarpark Drive
Suite 600
Houston, Texas 77042
Phone 713.953.5200
Fax 713.953.5026
FRN - F-1386

SURVEYED BY: AMANI ENG. | FB NO.: P-5679

CITY OF HOUSTON
DEPARTMENT OF PUBLIC WORKS AND ENGINEERING

ALMEDA SIMS WWTP & SPF IMPROVEMENTS PACKAGE-3

PROPOSED CHLORINE CONTACT BASIN IMPROVEMENT ELEVATIONS

WBS NUMBER	R-000298-0008-4
DRAWING SCALE	SCALE: 1" = 10'
CITY OF HOUSTON, PM	IRAJ RANJBAR, P.E.
SHEET NO.	44 OF 117

PUBLIC WORKS AND ENGINEERING
50431
CITY ENGINEER
HOUSTON, TEXAS

DWG: M-606

\\Whou-0002a-fpa\ced\Projdat\2005\2011\PHASE II\44 Chlorine Contact Basin Improvement Elevations.dwg

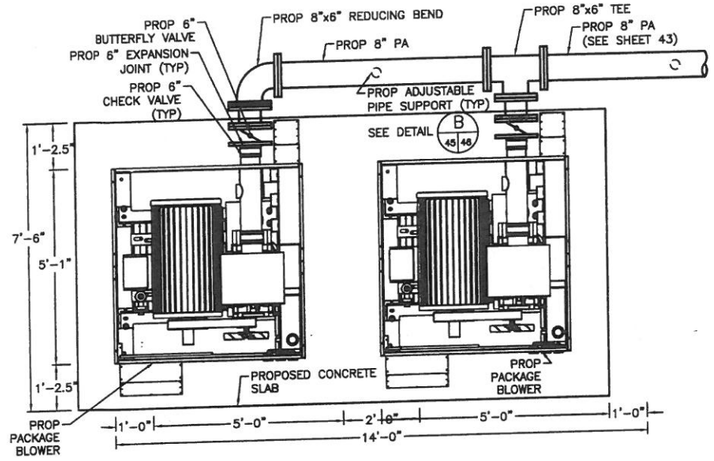

A 11 45 BLOWER PLAN VIEW
SCALE: 1"=2'

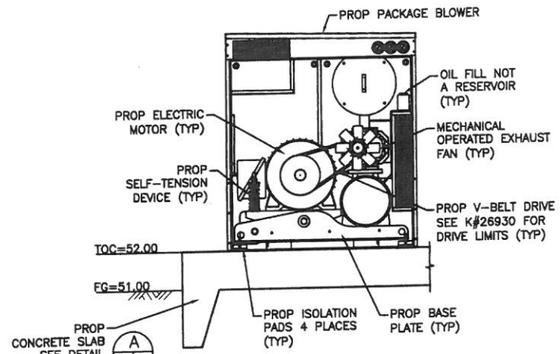

B 45 46 BLOWER INTERNAL FRONT VIEW
SCALE: 1"=2'

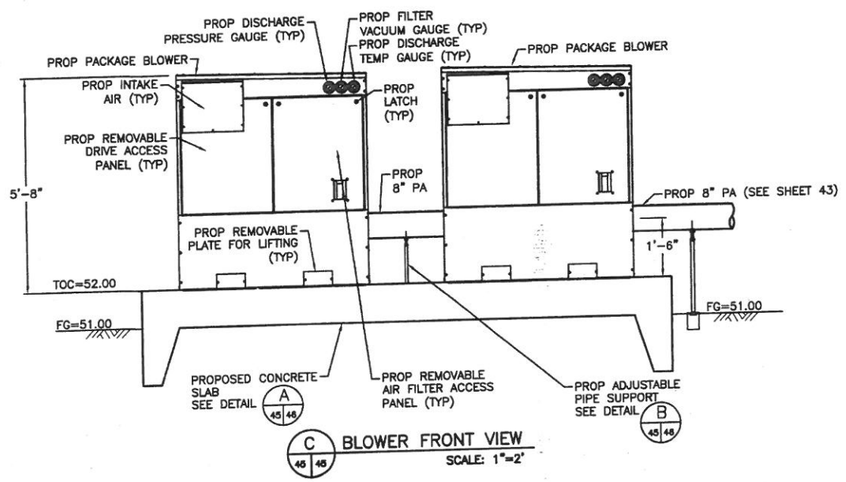

C 45 46 BLOWER FRONT VIEW
SCALE: 1"=2'

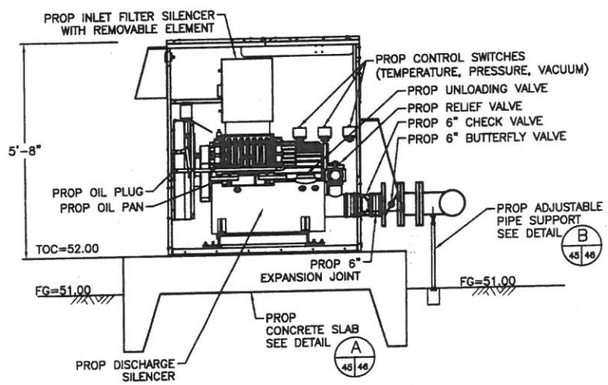

D 45 46 BLOWER SIDE VIEW
SCALE: 1"=2'

DATE	REVISION	BY

STATE OF TEXAS
MELISSA SIERRA
96809
LICENSED PROFESSIONAL ENGINEER
3/18/2013

LJA Engineering Inc.
2929 Briarpark Drive
Suite 600
Houston, Texas 77042
Phone 713.953.5200
Fax 713.953.5026
FRN - F-1386

SURVEYED BY: AMANI ENG. | FB NO.: P-5679

CITY OF HOUSTON
DEPARTMENT OF PUBLIC WORKS AND ENGINEERING

ALMEDA SIMS WWTP & SPF IMPROVEMENTS PACKAGE-3

PROPOSED POST-AERATION BLOWERS

WBS NUMBER	R-000298-0008-4
DRAWING SCALE	SCALE: 1" = 2'
CITY OF HOUSTON, PM	IRAJ RANJBAR, P.E.
SHEET NO. 45 OF 117	

DWG: M-607

PUBLIC WORKS & ENGINEERING 50431 HOUSTON, TEXAS

\\lhou-0002a-fpa\cad\Projdata1\2005\2011\PHASE II\45 Proposed Postaeration Blowers.dwg

45

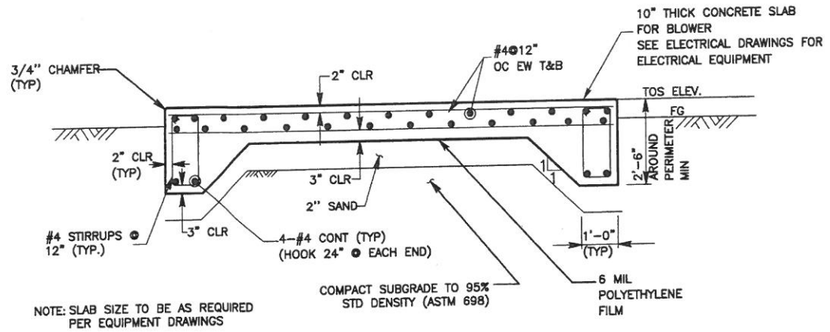

A 45 46 EQUIPMENT SLAB
N.T.S.

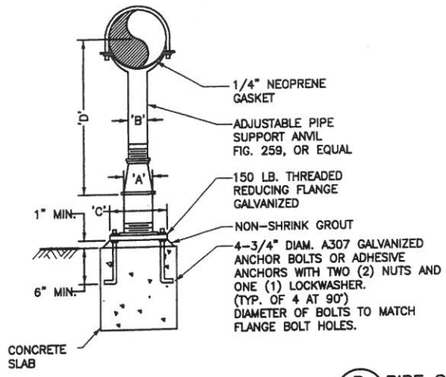

ADJUSTABLE PIPE SUPPORT APPROXIMATE DIMENSIONS IN INCHES *					
PIPE SIZE	'A'	'B'	'C'	'D' MIN.	'D' MAX.
2-1/2	2-1/2	1-1/2	9	8	13
3	2-1/2	1-1/2	9	8-1/4	30
3-1/2	2-1/2	1-1/2	9	8-1/2	30
4	3	*2-1/2	9	9-1/4	30
6	3	*2-1/2	9	10-1/2	15-1/4
8	3	*2-1/2	9	11-3/4	16-1/2
10	3	*2-1/2	9	13-1/2	18-1/4
12	3	*2-1/2	9	15	19-3/4
14	4	3	11	16-1/4	20-3/4
16	4	3	11	17-3/4	22-1/4
18	6	3-1/2	13-1/2	19-1/2	24
20	6	3-1/2	13-1/2	21	25-1/2
24	6	4	13-1/2	23-3/4	28-1/4
30	6	4	13-1/2	27	31-1/2
32	6	4	13-1/2	28-1/4	32-3/4
36	6	4	13-1/2	30-1/4	34-3/4

* SEE MANUFACTURER.

B 45 46 PIPE SUPPORT DETAIL
N.T.S.

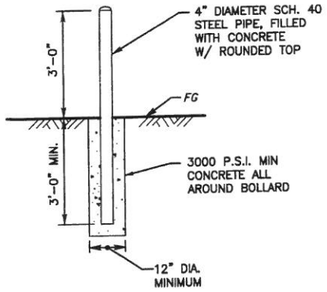

C 11 46 PIPE BOLLARD DETAIL
N.T.S.

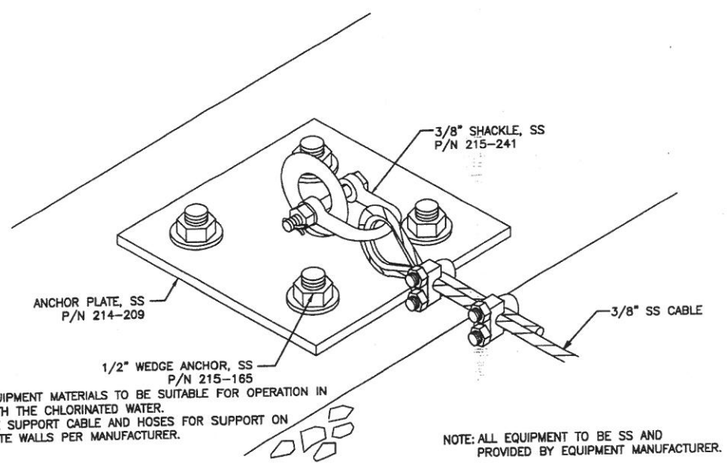

NOTES:
1. ALL EQUIPMENT MATERIALS TO BE SUITABLE FOR OPERATION IN AND WITH THE CHLORINATED WATER.
2. PROVIDE SUPPORT CABLE AND HOSES FOR SUPPORT ON CONCRETE WALLS PER MANUFACTURER.

D 43 46 FLOATING SKIMMER BRACKET DETAIL
N.T.S.

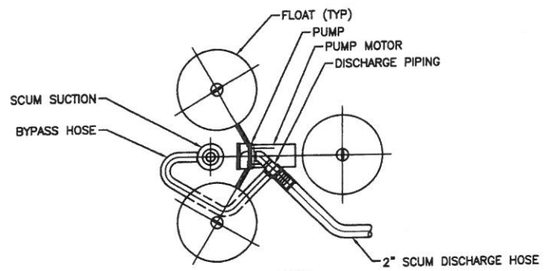

PLAN

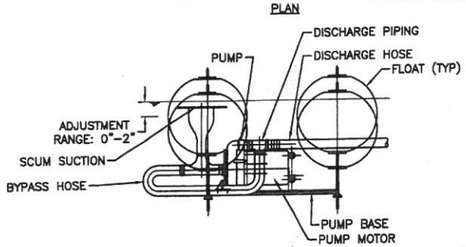

ELEVATION

NOTES:
1. ALL EQUIPMENT MATERIALS TO BE SUITABLE FOR OPERATION IN AND WITH THE CHLORINATED WATER.
2. PROVIDE SUPPORT CABLE AND HOSES FOR SUPPORT ON CONCRETE WALLS PER MANUFACTURER.

E 43 46 FLOATING SKIMMER PLAN AND ELEVATION
SCALE: 1"=2'

DATE	REVISION	BY

STATE OF TEXAS
MELEDA SIERRA
96809
LICENSED PROFESSIONAL ENGINEER
3/14/2013

LJA Engineering Inc.
2929 Briarpark Drive
Suite 600
Houston, Texas 77042
Phone 713.953.5200
Fax 713.953.5026
FRN - F-1386

SURVEYED BY: AMANI ENG. | FB NO.: P-5679

CITY OF HOUSTON
DEPARTMENT OF PUBLIC WORKS AND ENGINEERING

ALMEDA SIMS WWTP & SPF IMPROVEMENTS PACKAGE-3

DISINFECTION AND POST-AERATION MECHANICAL DETAILS

WBS NUMBER	R-000298-0008-4
DRAWING SCALE	SCALE: AS SHOWN
CITY OF HOUSTON, PM	IRAJ RANJBAR, P.E.
SHEET NO.	46 OF 117

PUBLIC WORKS & ENGINEERING 50431 HOUSTON, TEXAS

DWG: M-608

\\Whou-0002s-fpa\cad\Projects\2009\11\PHASE II\46 Disinfection and Postaeration.dwg

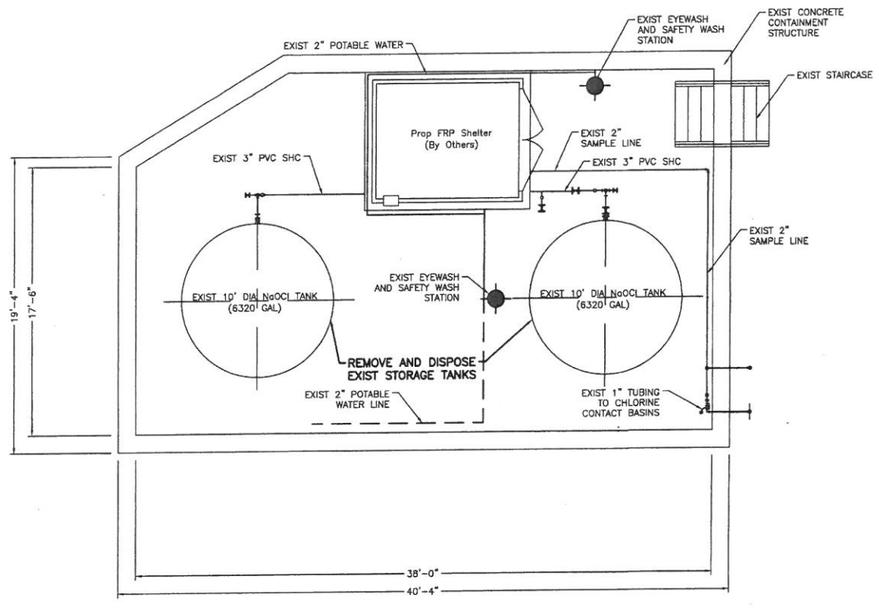

B / 10 / 47 SODIUM HYPOCHLORITE TANKS PLAN
SCALE: 1"=5'

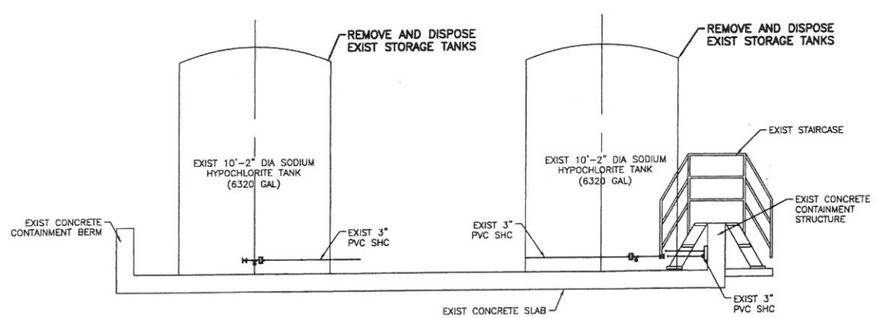

B / 47 / 47 SODIUM HYPOCHLORITE TANKS ELEVATION
SCALE: 1"=5'

DEMOLITION NOTES

1. REMOVE ALL EXISTING CHLORINE STORAGE TANKS.
2. CONTRACTOR SHALL DISPOSE OF ALL EQUIPMENT AND DEBRIS, UNLESS THE CITY CHOOSES TO RETAIN ANY OF THE REMOVED MATERIAL.
3. REPLACE ONE TANK AT A TIME TO MAINTAIN EXIST CL2 FEED SYSTEM IN CONTINUOUS OPERATION.
4. COORDINATE WORK WITH PLANT OPERATION PERSONNEL

DATE	REVISION	BY

STATE OF TEXAS
MELEIDA SIERRA
96809
LICENSED PROFESSIONAL ENGINEER
3/14/2013

LJA Engineering Inc.
2929 Briarpark Drive
Suite 600
Houston, Texas 77042
Phone 713.953.5200
Fax 713.953.5026
FRN - F-1386

SURVEYED BY: AMANI ENG. | FB NO.: P-5679

CITY OF HOUSTON
DEPARTMENT OF PUBLIC WORKS AND ENGINEERING

ALMEDA SIMS WWTP & SPF IMPROVEMENTS PACKAGE-3

EXISTING SODIUM HYPOCHLORITE TANKS DEMOLITION PLAN AND ELEVATION

WBS NUMBER	R-000298-0008-4
DRAWING SCALE	SCALE: 1" = 5'
CITY OF HOUSTON, PM	IRAJ RANJBAR, P.E.
SHEET NO.	47 OF 117

PUBLIC WORKS AND ENGINEERING
50431
CITY REGISTRATION NUMBER
HOUSTON, TEXAS

DWG: M-701

47

\\Whou-0002a-fps\coa\Projdsk1\2005\2011\PHASE II\47 Sodium Hypochlorite Tanks Demolition Plan And Elevation.dwg

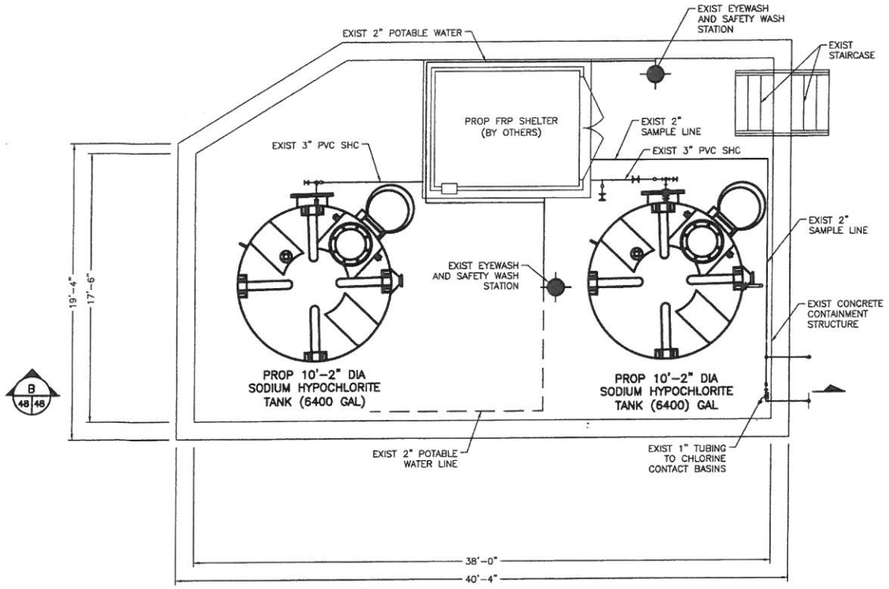

B 48 | 48

B 11 | 48 SODIUM HYPOCHLORITE TANKS PLAN
SCALE 1"=5'

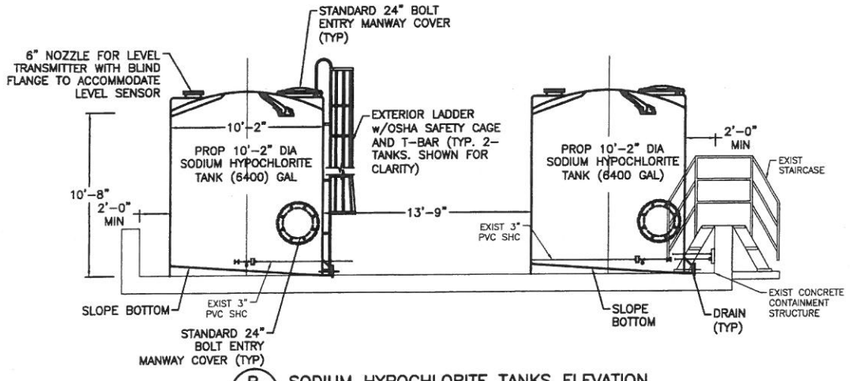

B 48 | 48 SODIUM HYPOCHLORITE TANKS ELEVATION
SCALE 1"=5'

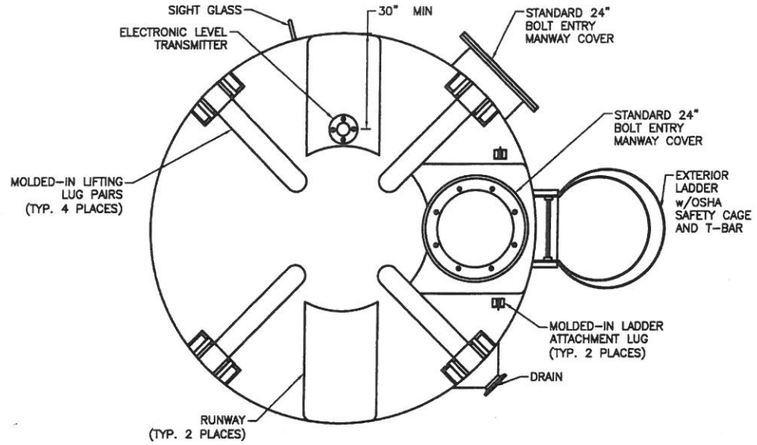

C 48 | 48 TANK LAYOUT
SCALE 1"=2'

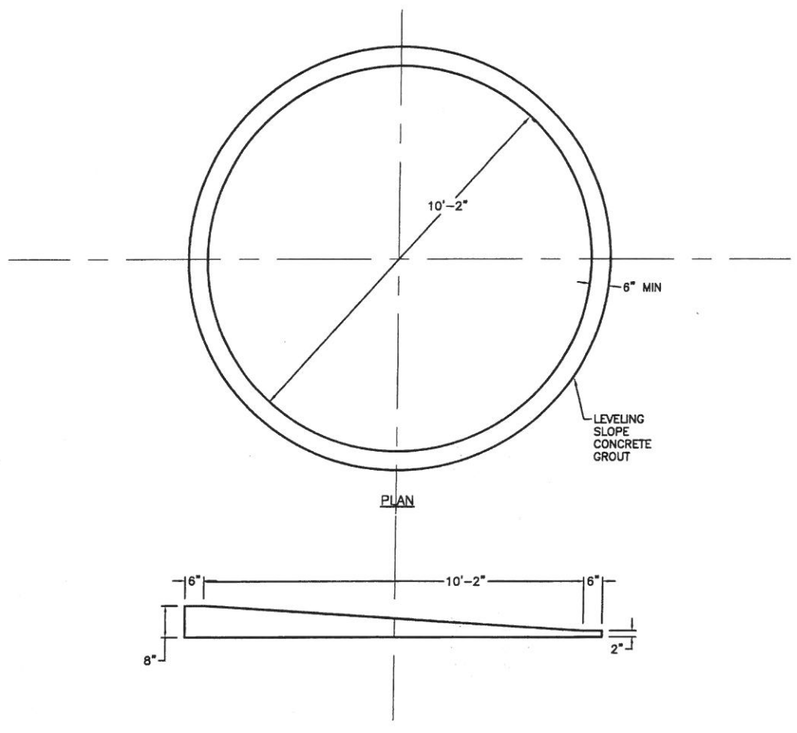

D 48 | 48 TANK LEVELING GROUT
SCALE 1"=2'

NOTES:
1. REPLACE ONE TANK AT A TIME TO MAINTAIN EXIST CL2 FEED SYSTEM IN CONTINUOUS OPERATION.
2. CONNECT EXISTING PIPING TO PROPOSED TANK APPURTENANCES.
3. FIELD VERIFY EXISTING PIPING AND LAYOUT PRIOR TO SUBMITTALS AND TO START CONSTRUCTION.
4. PROVIDE TANK LEVELING GROUT AS REQUIRED BY TANK MANUFACTURER.
5. ALL PIPING AND FITTINGS SHALL BE SCH.80 PVC SOCKET WELD WITH VITON SEALS.

DATE	REVISION	BY

STATE OF TEXAS
MELEIDA SIERRA
96809
LICENSED PROFESSIONAL ENGINEER
9/18/2013

LJA Engineering Inc.
2929 Briarpark Drive
Suite 600
Houston, Texas 77042
Phone 713.953.5200
Fax 713.953.5026
FRN - F-1386

SURVEYED BY: AMANI ENG. | FB NO.: P-5679

CITY OF HOUSTON
DEPARTMENT OF PUBLIC WORKS AND ENGINEERING

ALMEDA SIMS WWTP & SPF IMPROVEMENTS PACKAGE-3

PROPOSED
SODIUM HYPOCHLORITE TANKS
PLAN AND ELEVATION

WBS NUMBER	R-000298-0008-4
DRAWING SCALE	SCALE: AS SHOWN
CITY OF HOUSTON, PM	IRAJ RANJBAR, P.E.
SHEET NO.	48 OF 117

PUBLIC WORKS AND ENGINEERING 50431 CITY OF HOUSTON, TEXAS

DWG: M-702

48

\\Rhino-0002a-fpx\cad\Projdsk1\2005\2011\PHASE II\48 Proposed Sodium Hypochlorite Tanks.dwg

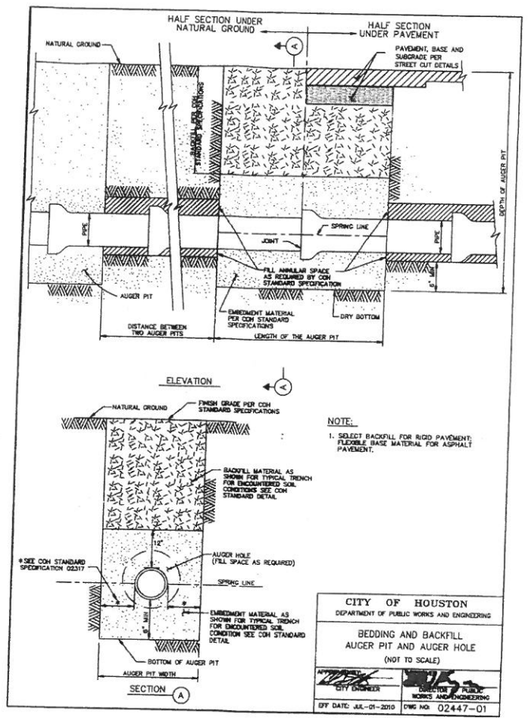

NOTE:

1. SELECT BACKFILL FOR RIGID PAVEMENT; FLEXIBLE BASE MATERIAL FOR ASPHALT PAVEMENT.

CITY OF HOUSTON
DEPARTMENT OF PUBLIC WORKS AND ENGINEERING

BEDDING AND BACKFILL
AUGER PIT AND AUGER HOLE
(NOT TO SCALE)

APPROVED BY: CITY ENGINEER | APPROVED BY: DIRECTOR OF PUBLIC WORKS AND ENGINEERING

EFF DATE: JUL-01-2010 | DWG NO: 02447-01

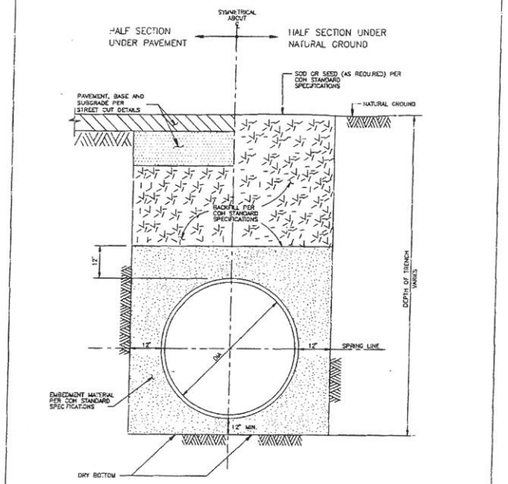

CITY OF HOUSTON
DEPARTMENT OF PUBLIC WORKS AND ENGINEERING
CONSTRUCTION AND REAL ESTATE DIVISION

WATER DISTRIBUTION MAIN
BEDDING AND BACKFILL FOR
OPEN CUT TRENCHES
(NOT TO SCALE)

APPROVED BY: CITY ENGINEER | APPROVED BY: DIRECTOR OF PUBLIC WORKS AND ENGINEERING

EFF DATE: OCT-01-2002 | DWG NO: 02317-04

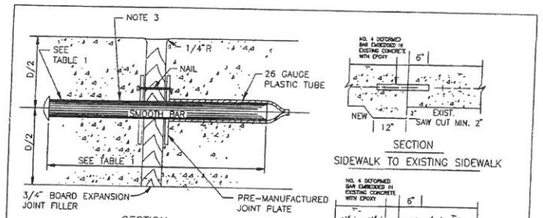

SECTION
DOWEL TYPE EXPANSION JOINT
N.T.S

SECTION
SIDEWALK TO EXISTING SIDEWALK

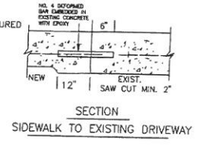

SECTION
SIDEWALK TO EXISTING DRIVEWAY

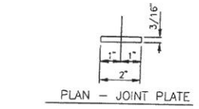

PLAN – JOINT PLATE

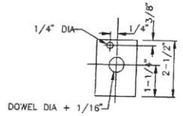

ELEVATION – JOINT PLATE
N.T.S.

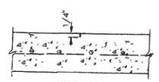

SECTION
CONTROL JOINT
N.T.S.

NOTES:

1. STEEL TO MEET ASTM STANDARD SPECIFICATIONS FOR CONCRETE REINFORCING BARS.
2. EXPANSION JOINT TO BE PLACED AT THE END OF EACH CURB RADIUS AND SPACED AT A MAXIMUM DISTANCE OF 36' FEET. MAXIMUM SPACING FOR CONTROL JOINTS SHALL BE 5' FEET.
3. CENTER DOWEL HORIZONTALLY ON JOINT.
4. CENTER DOWEL VERTICALLY IN CONCRETE AS NEEDED TO MAINTAIN 2" MIN. COVER.

TABLE 1

PAVEMENT THICKNESS (IN)	DOWEL SIZES AND SPACINGS		
	DIAMETER (IN)	LENGTH (IN)	SPACING (IN)
4 1/2	1/2	18	12
5	1/2	18	12
6	3/4	18	12
7	1	18	12

CITY OF HOUSTON
DEPARTMENT OF PUBLIC WORKS AND ENGINEERING
ENGINEERING, CONSTRUCTION AND REAL ESTATE DIVISION

SIDEWALK
EXPANSION AND CONSTRUCTION
JOINT DETAILS
(NOT TO SCALE)

APPROVED BY: CITY ENGINEER | APPROVED BY: DIRECTOR OF PUBLIC WORKS AND ENGINEERING

EFF DATE: OCT-01-2002 | DWG NO: 02752-02

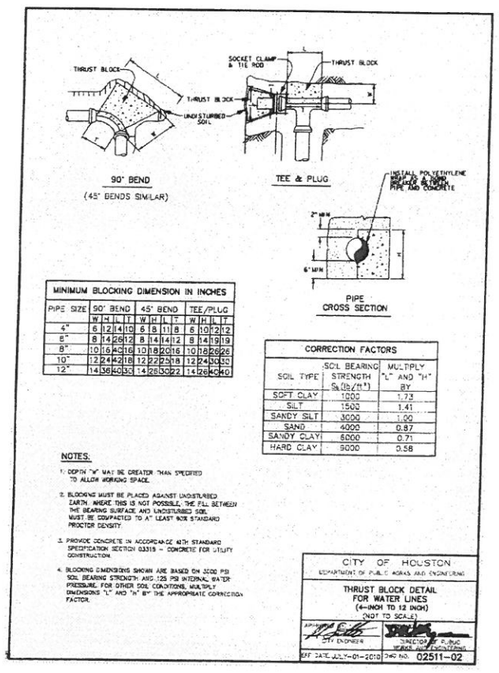

MINIMUM BLOCKING DIMENSION IN INCHES												
PIPE SIZE	90° BEND			45° BEND			TEE/PLUG					
	W	H	L	T	W	H	L	T	W	H	L	T
4"	6	12	14	10	6	8	11	8	6	10	12	12
6"	8	14	26	12	8	14	14	12	8	14	19	19
8"	10	16	42	18	10	18	20	16	10	18	26	26
10"	12	24	42	18	12	22	25	18	12	24	30	30
12"	14	36	60	30	14	28	30	22	14	28	40	40

CORRECTION FACTORS		
SOIL TYPE	SOIL BEARING STRENGTH S_b (lb/ft²)	MULTIPLY "L" AND "H" BY
SOFT CLAY	1000	1.73
SILT	1500	1.41
SANDY SILT	3000	1.00
SAND	4000	0.87
SANDY CLAY	5000	0.71
HARD CLAY	9000	0.58

NOTES:

1. DEPTH "H" MAY BE GREATER THAN SPECIFIED TO ALLOW WORKING SPACE.
2. BLOCKING MUST BE PLACED AGAINST UNDISTURBED EARTH. WHERE THIS IS NOT POSSIBLE, THE FILL BETWEEN THE BEARING SURFACE AND UNDISTURBED SOIL MUST BE COMPACTED TO AT LEAST 90% STANDARD PROCTOR DENSITY.
3. PROVIDE CONCRETE IN ACCORDANCE WITH STANDARD SPECIFICATION SECTION 03315 – CONCRETE FOR UTILITY CONSTRUCTION.
4. BLOCKING DIMENSIONS SHOWN ARE BASED ON 2000 PSI SOIL BEARING STRENGTH AND 125 PSI INTERNAL WATER PRESSURE. FOR OTHER SOIL CONDITIONS, MULTIPLY DIMENSIONS "L" AND "H" BY THE APPROPRIATE CORRECTION FACTOR.

CITY OF HOUSTON
DEPARTMENT OF PUBLIC WORKS AND ENGINEERING

THRUST BLOCK DETAIL
FOR WATER LINES
(4-INCH TO 12 INCH)
(NOT TO SCALE)

APPROVED BY: CITY ENGINEER | APPROVED BY: DIRECTOR OF PUBLIC WORKS AND ENGINEERING

EFF DATE: JULY-01-2013 | DWG NO: 02511-02

DATE	REVISION	BY

STATE OF TEXAS
MELINDA SIERRA
96809
LICENSED
PROFESSIONAL ENGINEER
7/8/2013

LJA Engineering Inc.
2929 Briarpark Drive
Suite 600
Houston, Texas 77042
Phone 713.953.5200
Fax 713.953.5026
FRN - F-1386

SURVEYED BY: AMANI ENG. | FB NO.: P-5679

CITY OF HOUSTON
DEPARTMENT OF PUBLIC WORKS AND ENGINEERING

ALMEDA SIMS WWTP & SPF IMPROVEMENTS PACKAGE-3

CIVIL DETAILS

WBS NUMBER
R-000298-0008-4
DRAWING SCALE
SCALE: N.T.S.
CITY OF HOUSTON, PM
IRAJ RANJBAR, P.E.
SHEET NO. 49 OF 117

50431
REGISTERED PROFESSIONAL ENGINEER
HOUSTON, TEXAS

DWG: D-101

\\Whou-0002a-fpa\cad\Projects\2005\2011\PHASE II\49 Civil Details.dwg

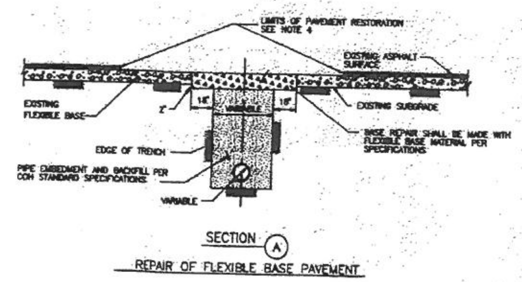

SECTION (A)

REPAIR OF FLEXIBLE BASE PAVEMENT

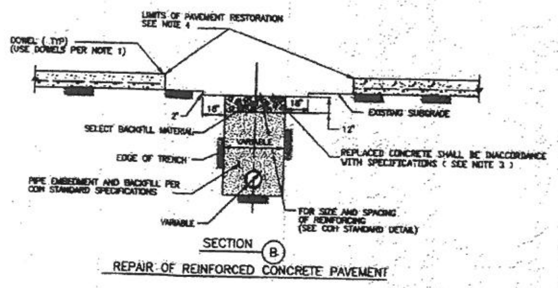

SECTION (B)

REPAIR OF REINFORCED CONCRETE PAVEMENT

NOTE:

1. EXPOSE 15" OF REINFORCING STEEL AT PROPOSED SAWED JOINT. IF NO REINFORCING STEEL EXISTS, USE HORIZONTAL DOWELS. HORIZONTAL DOWELS SHALL BE # 6 BARS, 24" LONG, 24" C-C, DRILLED AND EMBEDDED 8" INTO THE CENTER OF THE EXISTING SLAB. WITH "PO ROC" OR EQUAL.
2. IF REINFORCED CONCRETE IS OVERLAYED WITH ASPHALT, REPLACE WITH 2" MIN HMAC SURFACING.
3. REFER TO STANDARD DETAIL 02751-01 FOR REINFORCING STEEL REQUIREMENTS
4. REFER TO STANDARD DETAIL 02951-01 FOR PAVEMENT RESTORATION LIMITS.

CITY OF HOUSTON
DEPARTMENT OF PUBLIC WORKS AND ENGINEERING

PAVEMENT REPAIR DETAILS FOR STREET CUTS (NOT TO SCALE)

APPROVED BY: CITY ENGINEER — DIRECTOR OF PUBLIC WORKS AND ENGINEERING

EFF DATE: OCT-01-2002 | DWG NO: 02902-01

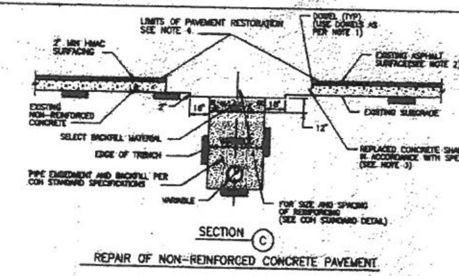

SECTION (C)

REPAIR OF NON-REINFORCED CONCRETE PAVEMENT

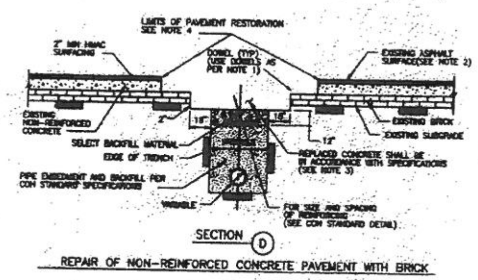

SECTION (D)

REPAIR OF NON-REINFORCED CONCRETE PAVEMENT WITH BRICK

NOTE:

1. EXPOSE 15" OF REINFORCING STEEL AT PROPOSED SAWED JOINT. IF NO REINFORCING STEEL EXISTS, USE HORIZONTAL DOWELS. HORIZONTAL DOWELS SHALL BE # 6 BARS, 24" LONG, 24" C-C, DRILLED AND EMBEDDED 8" INTO THE CENTER OF THE EXISTING SLAB. WITH "PO ROC" OR EQUAL.
2. IF REINFORCED CONCRETE IS OVERLAYED REPLACE WITH SAME THICKNESS OF HMAC SURFACING.
3. REFER TO STANDARD DETAIL 02751-01 FOR REINFORCING STEEL REQUIREMENT
4. REFER TO STANDARD DETAIL 02951-01 FOR PAVEMENT RESTORATION LIMITS.

CITY OF HOUSTON
DEPARTMENT OF PUBLIC WORKS AND ENGINEERING

PAVEMENT REPAIR DETAILS FOR STREET CUTS
NON REINFORCED CONCRETE AND BRICK PAVEMENT (NOT TO SCALE)

APPROVED BY: CITY ENGINEER — DIRECTOR OF PUBLIC WORKS AND ENGINEERING

EFF DATE: OCT-01-2002 | DWG NO: 02902-02

CONCRETE PAVEMENT RESTORATION

AGE OF PAVEMENT
LESS THAN OR EQUAL TO 5 YEARS

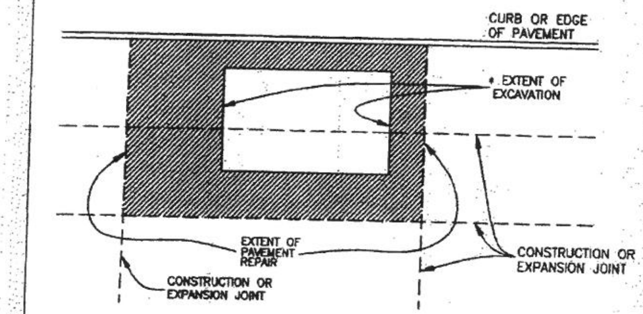

NOTES:

1. EXTENT OF PAVEMENT REPAIR SHALL BE PERPENDICULAR AND PARALLEL TO TRAVEL WAY.
2. REPLACE ENTIRE PANEL WIDTH AND LENGTH TO NEAREST CONSTRUCTION OR EXPANSION JOINT BEYOND EDGE OF EXCAVATION.
3. SAW CUT AND EXPOSE 15" OF REINFORCING STEEL WITHIN EXISTING PAVEMENT. PROVIDE HORIZONTAL DOWELS (PER SPECIFICATION SECTION 02902-01) IF EXISTING REINFORCING IS BROKEN OFF.
4. REPLACE CURB WHEN ADJACENT LANE IS REPLACED.
5. MAINTAIN EXPANSION JOINTS AT EXISTING LOCATIONS UNLESS OTHERWISE DIRECTED BY CITY ENGINEER.
6. SPECIALTY PAVEMENTS (IE: BRICK PAVERS) TO BE REPLACED WITH MATCHING PAVEMENT IN ALL CASES.
7. REPLACE PAVEMENT MARKINGS IN ACCORDANCE WITH CITY SPECIFICATIONS 02764 AND 02767.

* EXTENT OF EXCAVATION INCLUDES 18" OVERCUT AS SHOWN ON STANDARD DETAIL 02902-01.

CITY OF HOUSTON
DEPARTMENT OF PUBLIC WORKS AND ENGINEERING

Street Cut Pavement Replacement
CONCRETE PAVEMENT LESS THAN 5 YRS IN AGE (NOT TO SCALE)

APPROVED BY: CITY ENGINEER — DIRECTOR OF PUBLIC WORKS AND ENGINEERING

EFF DATE: JUNE 2002 | DWG NO: 02951-01

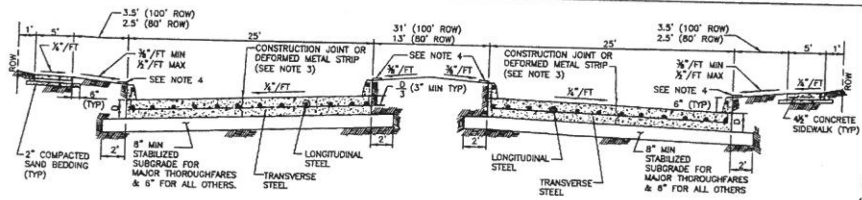

TYPICAL DOUBLE ROADWAY SECTION FOR CONCRETE PAVEMENT WITH CURBS NOTES:

1. THE MAXIMUM WIDTH BETWEEN LONGITUDINAL JOINTS SHALL NOT EXCEED 15'-0".
2. ALL EARTHEN AREAS ARE TO BE HYDROMULCHED UNLESS SHOWN OTHERWISE ON DRAWINGS.
3. CONTRACTOR MAY SAW CUT IN LIEU OF DEFORMED METAL STRIP.
4. USE STRIP OF SOD GRASS TO PREVENT EROSION UNTIL STAND OF GRASS IS ESTABLISHED.
5. AN EQUAL OR LARGER AREA OF WELDED REINFORCEMENT BAR CONFORMING TO ASTM A497, MAY BE SUBSTITUTED FOR REBARS LISTED IN TABLE 1.
6. IF AVAILABLE ROW IS NOT SUFFICIENT TO ACCOMMODATE A 5-FEET SIDEWALK, ENGINEER SHALL OBTAIN A VARIANCE FROM THE CITY ENGINEER FOR A 4-FEET WIDE SIDEWALK.

TABLE 1

REINFORCING STEEL BAR SIZES AND SPACINGS FOR VARIOUS PAVEMENT THICKNESSES (D) WITH: MAXIMUM EXPANSION JOINT SPACING = 80 FT. fc' = 3,500 PSI/28 DAYS AND FY = 60,000 PSI

PAVEMENT THICKNESS D (IN)	PAVEMENT WIDTH (FT)	LONGITUDINAL STEEL # 4 BARS NUMBER OF BARS	# 4 BARS SPACING (IN)	# 4 BARS END BAR SPACING (IN)	# 5 BARS NUMBER OF BARS	# 5 BARS SPACING (IN)	# 5 BARS END BAR SPACING (IN)	# 6 BARS NUMBER OF BARS	# 6 BARS SPACING (IN)	# 6 BARS END BAR SPACING (IN)	TRANSVERSE STEEL # 4 BARS SPACING (IN)	# 5 BARS SPACING (IN)	# 6 BARS SPACING (IN)
6	28	17	20.50	4	—	—	—	—	—	—	36	—	—
7	25	17	18.25	4	—	—	—	—	—	—	36	—	—
7	35	24	18.00	3	—	—	—	—	—	—	36	—	—
7	36	25	17.75	3	—	—	—	—	—	—	36	—	—
7	37	25	18.25	3	—	—	—	—	—	—	36	—	—
7	41	28	18.00	3	—	—	—	—	—	—	36	—	—
7	45	31	17.75	3.75	—	—	—	—	—	—	36	—	—
8	25	20	15.50	2.75	13	24.50	3	—	—	—	36	36	—
8	34	27	15.50	2.5	17	25.00	4	—	—	—	36	36	—
8	35	27	16.00	2	18	24.25	4	—	—	—	36	36	—
8	36	28	15.75	3.25	18	25.00	3	—	—	—	30	36	—
8	44	24	15.75	4	22	24.75	4	—	—	—	30	36	—
8	45	35	15.75	2.25	23	24.25	3	—	—	—	30	36	—
9	25	22	14.00	3	14	22.50	4	—	—	—	36	36	—
9	34	31	13.50	2	19	22.25	3.5	—	—	—	30	36	—
9	35	31	13.75	3.75	20	21.75	3.5	—	—	—	30	36	—
9	36	32	13.75	3	21	21.25	3.5	—	—	—	30	36	—
9	44	39	13.75	2.75	25	21.75	3	—	—	—	24	36	—
9	45	39	14.00	4	26	21.25	4.5	—	—	—	24	36	—
10	25	24	12.75	3.5	17	18.25	4	—	—	—	36	36	36
10	34	33	12.50	4	21	20.00	4	—	—	—	30	36	36
10	35	34	12.50	3.75	23	18.75	4	—	—	—	30	36	36
10	36	35	12.50	3.5	24	18.50	3	—	—	—	30	36	36
10	44	44	12.00	4	29	18.50	4.5	—	—	—	24	36	36
10	45	44	12.50	3	29	19.00	3	—	—	—	24	36	36
11	25	27	11.25	3	17	18.25	4	12	26.75	3	36	36	36
11	34	36	11.50	2.75	24	17.50	2.5	17	25.00	4	24	36	36
11	35	37	11.50	3	24	18.00	3	17	25.75	4	24	36	36
11	36	40	11.00	2	25	17.75	3	17	26.50	4	24	36	36
11	44	48	11.125	2.5	30	18.00	3	21	26.00	4	24	36	36
11	45	49	11.125	3	31	17.75	4	22	25.50	3	24	36	36
12	25	—	—	—	19	16.25	4	13	24.50	3	36	36	36
12	34	—	—	—	26	18.00	4	18	23.50	4	24	36	36
12	35	—	—	—	26	16.50	4	19	23.00	3	24	36	36
12	36	—	—	—	27	18.25	4.5	20	22.25	4.5	24	36	36
12	44	—	—	—	33	16.25	4	24	22.50	5	24	30	36
12	45	—	—	—	35	15.75	3	25	22.25	3	24	30	36

MINIMUN LAP LENGTHS (L):
A. # 4 BARS; L = 22 INCHES
B. # 5 BARS; L = 27 INCHES
C. # 6 BARS; L = 32 INCHES

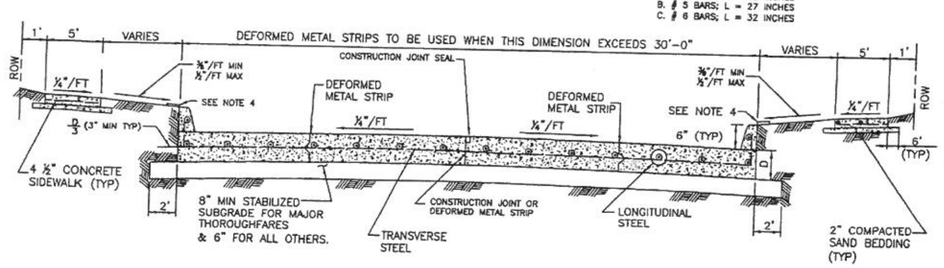

TYPICAL SINGLE ROADWAY SECTION FOR CONCRETE PAVEMENT WITH CURBS

CITY OF HOUSTON
DEPARTMENT OF PUBLIC WORKS AND ENGINEERING

CONCRETE PAVEMENT DETAILS (NOT TO SCALE)

APPROVED BY: CITY ENGINEER — APPROVED BY: DIRECTOR OF PUBLIC WORKS AND ENGINEERING

EFF DATE: JULY-01-2009 | DWG NO: 02751-01

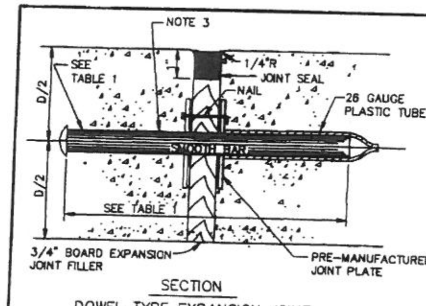

SECTION
DOWEL TYPE EXPANSION JOINT
N.T.S

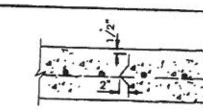

SECTION
DEFORMED METAL STRIP
N.T.S.

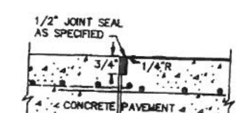

SECTION
CONSTRUCTION JOINT SEAL
N.T.S.

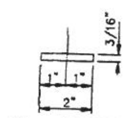

PLAN – JOINT PLATE

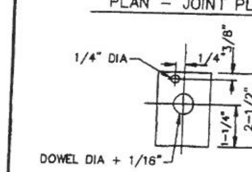

ELEVATION – JOINT PLATE
N.T.S.

NOTES:

1. STEEL TO MEET ASTM STANDARD SPECIFICATIONS FOR CONCRETE REINFORCING BARS. UNITS TO BE SPACED ON 12" CENTERS.
2. EXPANSION JOINT TO BE PLACED AT THE END OF EACH CURB RADIUS.
3. CENTER DOWEL HORIZONTALLY ON JOINT.
4. CENTER DOWEL VERTICALLY IN CONCRETE BASE. EXTEND THICKENED CONCRETE AS NEEDED TO MAINTAIN 3" MIN. COVER.
5. CITY OF HOUSTON APPROVED PRODUCTS MAY BE USED AS JOINT PLATE ALTERNATIVE

TABLE 1

PAVEMENT THICKNESS (IN)	DOWEL SIZES AND SPACINGS DIAMETER (IN)	LENGTH (IN)	SPACING (IN)
6	3/4	18	12
7	1	18	12
8	1	18	12
9	1 1/4	18	12
10	1 1/4	18	12
11	1 1/4	18	12
12	1 1/4	18	12

CITY OF HOUSTON
DEPARTMENT OF PUBLIC WORKS AND ENGINEERING

PAVEMENT EXPANSION AND CONSTRUCTION JOINT DETAILS (NOT TO SCALE)

APPROVED BY: CITY ENGINEER — DIRECTOR OF PUBLIC WORKS AND ENGINEERING

EFF DATE: June-01-2003 | DWG NO: 02752-01

DWG: D-102

DATE	REVISION	BY

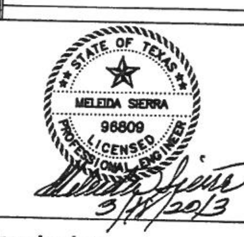

3/11/2013

LJA Engineering Inc.
2929 Briarpark Drive
Suite 600
Houston, Texas 77042
Phone 713.953.5200
Fax 713.953.5026
FRN - F-1386

SURVEYED BY: AMANI ENG. | FB NO.: P-5679

CITY OF HOUSTON
DEPARTMENT OF PUBLIC WORKS AND ENGINEERING

ALMEDA SIMS WWTP & SPF IMPROVEMENTS PACKAGE-3

PAVEMENT DETAILS

WBS NUMBER
R-000298-0008-4

DRAWING SCALE
SCALE: N.T.S.

CITY OF HOUSTON, PM
IRAJ RANJBAR, P.E.

SHEET NO. 50 OF 117

\\Whou-0002a-fps\cad\Projdsk1\2005\2011\PHASE II\50 Pavement Details.dwg

50

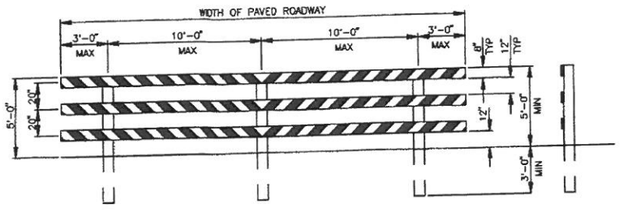

TYPE III BARRICADE
FOR END OF ROAD

FOR TYPE III BARRICADE FOR END OF ROAD, THE THREE (3) RAILS SHALL BE REFLECTIVE RED AND RELFLECTIVE WHITE SRIPES ON SIDE FACING TRAFFIC

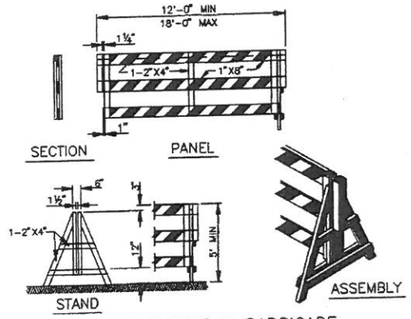

DEMOUNTABLE TYPE III BARRICADE

BARRICADE NOTES

THE MOST RECENT EDITION OF THE TEXAS MANUAL ON UNIFORM TRAFFIC CONTROL DEVICES, AND IT'S REVISIONS, SHALL GOVERN THE CONSTRUCTION AND USE OF ALL ITEMS HEREIN DESCRIBED.

CHANNELIZATION DEVICES OTHER THAN BARRICADES SHOULD NORMALLY BE USED FOR CHANNELIZATION PURPOSES.

BARRICADES SHOULD NORMALLY BE PLACED PERPENDICULAR TO THE TRAFFIC FLOW. OTHER CHANNELIZING DEVICES, SUCH AS DRUMS, VERTICAL PANELS OR PORTABLE BARRIERS, SHOULD BE USED WHERE NEEDED TO SEPARATE TRAFFIC FROM THE WORK AREA. IN ALL CASES, THE BARRICADES SHOULD BE SO LOCATED AS TO MOST ADVANTAGEOUSLY WARN AND DIRECT TRAFFIC.

BARRICADES MAY BE DESIGNED AND CONSTRUCTED FROM WOOD OR ANY OTHER SUITABLE MATERIAL IN A MANNER APPROVED BY THE DEPARTMENT OF TRAFFIC AND TRANSPORTATION. THE CONSTRUCTION DETAILS SHOWN HEREON ARE TYPICAL AND ARE SUGGESTED DETAILS FOR WOOD SUPPORT SYSTEMS FOR BARRICADES. THE DETAILS OF RAIL WIDTH AND STRIPING, NUMBER AND SPACING OF RAILS, MINIMUM LENGTH AND HEIGHT (ABOVE PAVEMENT) OF RAILS MUST BE ADHERED TO WHEN ALTERNATE DESIGNS ARE USED.

BARRICADES ARE TO BE CONSTRUCTED OF CLEAN SOUND MATERIAL. ALL SURFACES ABOVE GROUND, WHICH ARE NOT STRIPED, SHALL BE WHITE EXCEPT THE UNPAINTED GALVANIZED METAL OR ALUMINUM COMPONENTS MAY BE USED.
COMPONENTS MADE OF LUMBER SHALL BE PAINTED WITH A MINIMUM OF TWO COATS OF AN APPROVED BRAND OF WHITE PAINT TO SECURE THOROUGH COVERAGE AND A UNIFORM WHITE COLOR.

THE REFLECTORIZED WHITE AND REFLECTORIZED ORANGE (REFLECTORIZED RED) STRIPES FOR BARRICADES, DRUMS AND VERTICAL PANELS SHALL BE CONSTRUCTED OF "HIGH INTESITY SHEETING AND SHALL BE MAINTAINED TO MEET THE APPEARANCE, COLOR AND REFLECTIVITY REQUIREMENTS SET BY DOTT.

THE CONTRACTOR SHALL MAINTAIN EACH BARRICADE IN A CLEAN AND GOOD CONDITION.

BARRICADES SHALL BE REMOVED UPON COMPLETION OF THE WORK AND/OR THE ELIMINATION OF THE HAZARD ON ANY SECTION.

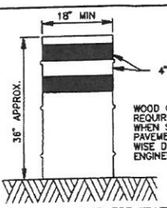

DRUMS

DRUMS, SET ON END, AND USED FOR TRAFFIC WARNING OR CHANNELIZATION SHALL BE APPROX 36" IN HEIGHT AND A MIN OF 18" IN DIAMETER. THE CONTRACTOR, AT HIS OPTION, MAY USE DRUMS MADE FROM STEEL BARRELS OR BLACK POLYETHYLENE PLASTIC DRUM LINERS WEIGHING APPROX EIGHT POUNDS EACH. THE MARKINGS ON DRUMS SHALL BE HORIZONTAL, CIRCUMFERENTIAL, REFLECTORIZED ORANGE AND REFLECTORIZED WHITE STRIPES, 4 TO 8 INCHES WIDE. THE FIRST REFLECTORIZED STRIPE SHOULD START WITHIN TWO (2) INCHES OF THE TOP OF THE DRUM. THERE SHALL BE AT LEAST TWO ORANGE AND TWO WHITE STRIPES ON EACH DRUM. IF THERE ARE NON-REFLECTORIZED SPACES BETWEEN THE HORIZONTAL ORANGE AND WHITE STRIPES, THEY SHALL BE NO MORE THAN 2 INCHES WIDE. METAL DRUMS SHALL BE PAINTED BLACK OR ORANGE BEFORE REFLECTORIZED STRIPES ARE ADDED. ALL DRUMS ON PROJECT WILL BE THE SAME COLOR. WHEN DRUMS ARE PLACED IN THE ROADWAY, APPROPIATE WARNING SIGNS SHOULD BE USED. DURING HOURS OF DARKNESS, A FLASHING WARNING LIGHT SHOULD BE PLACED ON DRUMS USED SINGLY AS A WARNING DEVICE. STEADY BURN ELECTRIC LIGHTS OR DELINEATORS SHOULD BE PLACED ON DRUMS USED IN SERIES FOR TRAFFIC CHANNELIZATION. DRUMS SHALL BE WEIGHTED WITH SAND TO THE EXTENT INDICATED IN THE PLANS.

CWI-8 CHEVRON SIGNS, CWI-6A ARROW SIGNS OR VP-1 VERTICAL PANELS MOUNTED ABOVE DRUMS MAY BE USED AS SUPPLEMENTS TO DRUM DELINEATION.

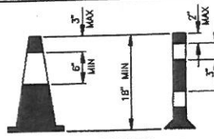

CONES

TRAFFIC CONES AND TUBULAR MARKERS SHALL BE A MIN OF 18" INCHES IN HEIGHT WITH A BROADENED BASE AND MAY BE MADE OF VARIOUS MATERIALS TO WITHSTAND IMPACT WITHOUT DAMAGE TO THEMSELVES OR TO VEHICLES. LARGER SIZES SHOULD BE USED ON FREEWAYS AND OTHER ROADWAYS WHERE SPEED ARE RELATIVELY HIGH OR WHERE EVER MORE CONSPICUOUS GUIDANCE IS NEEDED. ORANGE SHALL BE THE PREDOMINANT COLOR ON CONES AND TUBULAR MARKERS. THEY SHOULD BE KEPT CLEAN AND BRIGHT FOR MAX TARGET VALUE. FOR NIGHTTIME USE THEY SHALL BE REFLECTORIZED OR EQUIPPED WITH LIGHTING DEVICES FOR MAX VISIBILITY. REFLECTORIZED MATERIAL SHALL HAVE A SMOOTH, SEALED OUTER SURFACE WHICH WILL DISPLAY THE SAME APPROX COLOR DAY AND NIGHT.

REFLECTORIZATION OF TUBULAR MARKERS SHALL BE A MIN OF TWO THREE-INCH BANDS PLACED A MAX OF 2" FROM THE TOP WITH A MAX OF 6" BETWEEN THE BANDS. REFLECTORIZATION OF CONES SHALL BE PROVIDED BY A MIN 6" BAND PLACED A MAX OF 3" FROM THE TOP.

CONES OR TUBULAR MARKERS ARE GENERALLY ONLY SUITABLE FOR TEMPORARY USAGE (UP TO 8 HOURS) WITH OTHER CHANNELIZATION DEVICES SUCH AS VERTICAL PANELS OR BARRICADES PREFERRED FOR LONGER TERM USAGE. CARE SHOULD BE TAKEN TO INSURE THAT THEY REMAIN IN THEIR PROPER LOCATION AND IN AN UPRIGHT POSITION.

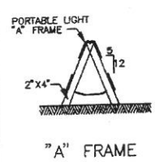

"A" FRAME

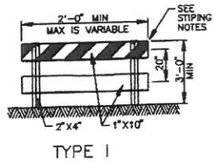

TYPE I

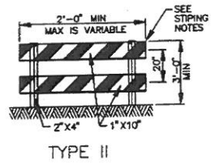

TYPE II

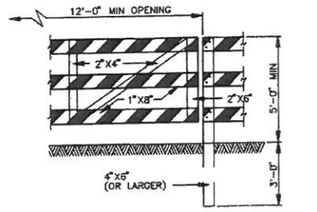

GATE FOR
TYPE III BARRICADE

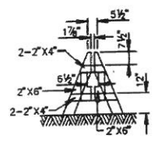

DEMOUNTABLE

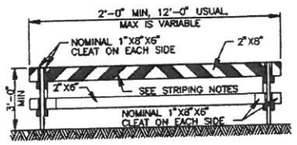

TYPE I

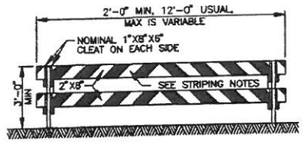

TYPE II

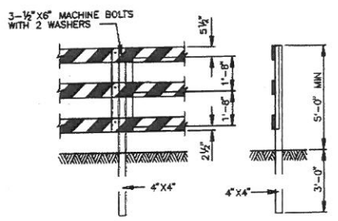

POST FOR
TYPE III BARRICADE

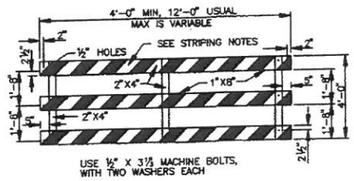

PANEL FOR
TYPE III BARRICADE

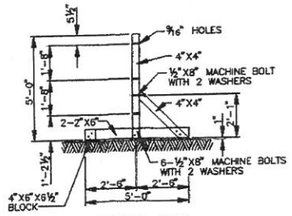

STAND FOR
TYPE III BARRICADE

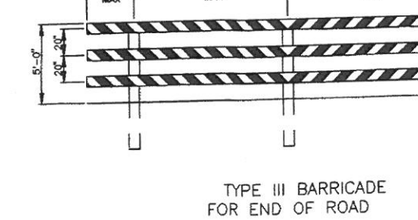

VERTICAL PANELS (VP)

VERTICAL PANELS ARE NORMALLY USED AS CHANNELIZING DEVICES TO INDICATE TANGENT OR NEARLY TANGENT ROADWAY ALIGNMENT WHERE GOOD TARGET VALUE OF A DEVICE IS NEEDED IN DAYTIME AS WELL AS THE NIGHTTIME. IN ADDITION, VERTICAL PANELS SHOULD BE USED AT THE EDGE OF SHOULDER DROP-OFFS AND OTHER SUCH AREAS AS LANE TRANSITIONS WHERE POSITIVE DAY AND NIGHT DELINEATION MAY BE REQUIRED. VERTICAL PANELS SHOULD BE MOUNTED BACK TO BACK IF USED AT THE EDGE OF CUTS ADJACENT TO TWO-WAY TWO LANE ROADWAYS. STRIPES SHOULD ALWAYS SLOPE DOWNWARD TOWARD THE TRAVELED WAY.

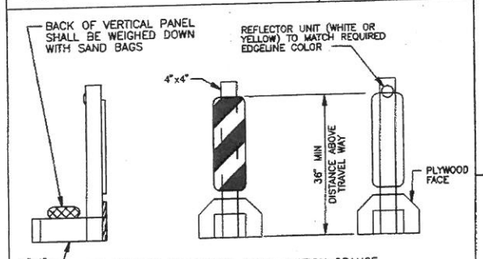

TYPICAL PORTABLE VERTICAL PANEL
OR DELINEATOR

OTHER SIMILAR SUPPORTS MAY BE USED WHEN APPROVED OR DIRECTED BY THE COH DEPT OF TRAFFIC AND TRANSPORTATION

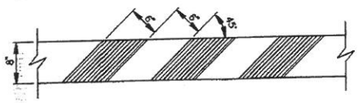

STRIPING FOR BARRICADE

FOR ALL TYPES OF BARRICADES WITH RAILS LESS THAN 3'-0" LONG, STRIPES 4" WIDE SHALL BE USED. IDENTIFICATION MARKINGS MAY BE SHOWN ONLY ON BACK SIDE OF BARRICADE RAILS.

STRIPING SHOULD COVER THE FULL WIDTH OF THE RAIL. STRIPING OF RAILS, PANELS, ETC, SHOULD SLOPE DOWNWARD AT AN ANGLE OF 45° DEGREES IN DIRECTIONS TRAFFIC IS TO PASS.

WHERE A BARRICADE EXTENDS ENTIRELY ACROSS A ROADWAY, IT IS DESIRABLE THAT THE STRIPES SLOPE DOWNWARD IN THE DIRECTION TOWARD WHICH TRAFFIC MUST TURN IN DETOURING. WHEN BOTH RIGHT AND LEFT TURNS ARE PROVIDED FOR, THE CHEVRON STRIPING MAY SLOPE DOWNWARD IN BOTH DIRECTIONS FROM THE CENTER OF THE BARRICADE.

CITY OF HOUSTON
DEPARTMENT OF PUBLIC WORKS AND ENGINEERING
ENGINEERING, CONSTRUCTION AND REAL ESTATE DIVISION

BARRICADE STANDARD

(NOT TO SCALE)

APPROVED BY: CITY ENGINEER	APPROVED BY: DIRECTOR OF PUBLIC WORKS AND ENGINEERING
EFF DATE: OCT-01-2002	DWG NO: 01580-01

DWG: D-103

DATE	REVISION	BY

STATE OF TEXAS
MELEIDA SIERRA
96809
LICENSED
PROFESSIONAL ENGINEER
5/8/2013

LJA Engineering Inc.
2929 Briarpark Drive
Suite 600
Houston, Texas 77042
Phone 713.953.520
Fax 713.953.507
FRN - F-138

SURVEYED BY: AMANI ENG. | FB NO.: P-5679

CITY OF HOUSTON
DEPARTMENT OF PUBLIC WORKS AND ENGINEERING

ALMEDA SIMS WWTP & SP
IMPROVEMENTS PACKAGE-

BARRICADE DETAILS

WBS NUMBER	R-000298-0008-4
DRAWING SCALE	SCALE: N.T.S.
CITY OF HOUSTON, PM	IRAJ RANJBAR, P.E.
SHEET NO.	51 OF 117

PUBLIC WORKS AND ENGINEERING
50431
CITY OF HOUSTON
HOUSTON, TEXAS

51

\\Whou-0002a-fpa\cad\Projdsk1\2005\2011\PHASE II\51 Barricade Details.dwg

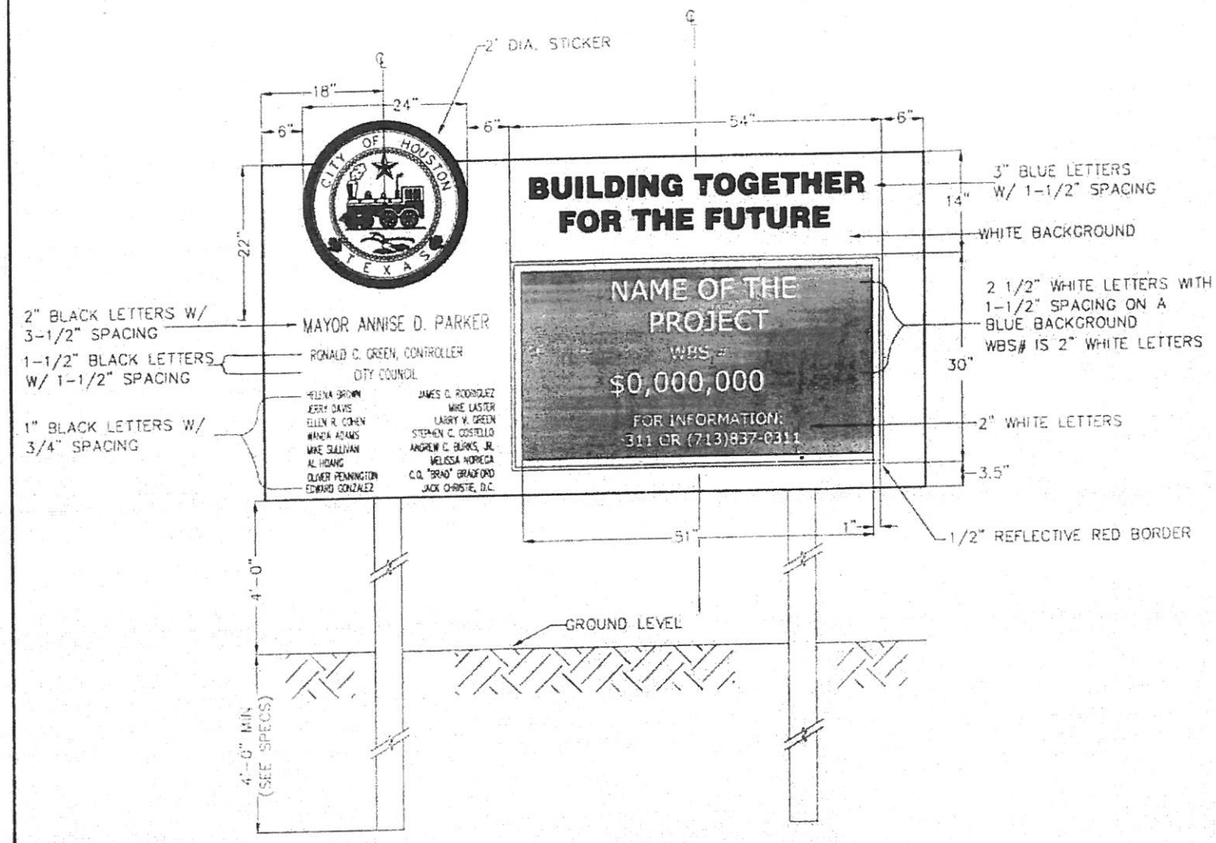

CITY OF HOUSTON
DEPARTMENT OF PUBLIC WORKS AND ENGINEERING

CONSTRUCTION
SIGN
(NOT TO SCALE)

APPROVED
CITY ENGINEER

APPROVED
DIRECTOR OF PUBLIC
WORKS AND ENGINEERING

EFF. DATE: JAN - 25 - 2012

DWG NO: 01580-03

DATE	REVISION	BY

STATE OF TEXAS
MELEDA SIERRA
98809
LICENSED
PROFESSIONAL ENGINEER
3/6/2013

LJA Engineering Inc.
2929 Briarpark Drive
Suite 600
Houston, Texas 77042
Phone 713.953.5200
Fax 713.953.5026
FRN - F-1386

SURVEYED BY: AMANI ENG. | FB NO.: P-5679

CITY OF HOUSTON
DEPARTMENT OF PUBLIC WORKS AND ENGINEERING

ALMEDA SIMS WWTP & SPF
IMPROVEMENTS PACKAGE-3

CONSTRUCTION SIGN DETAIL

WBS NUMBER	R-000298-0008-4
DRAWING SCALE	SCALE: N.T.S.
CITY OF HOUSTON, PM	IRAJ RANJBAR, P.E.
SHEET NO.	52 OF 117

PUBLIC WORKS AND ENGINEERING
50431
CITY OF HOUSTON, TEXAS

DWG: D-104

COH

\\Wmou-0002g-fpa\coa\Projdata\A2000\A20\A1PHASE-II\52 Cogtruction Sign-Detail.dwg

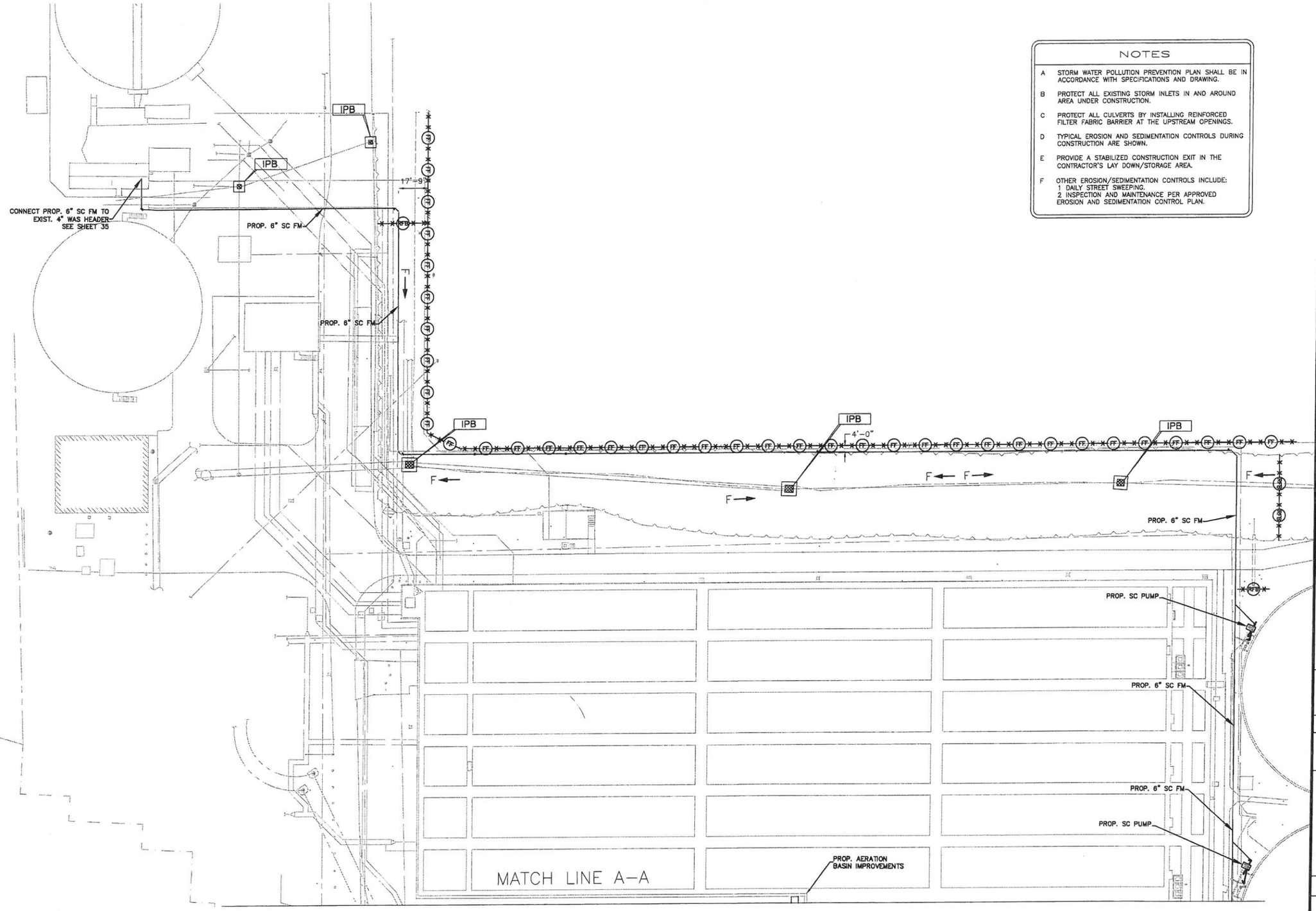

NOTES

A STORM WATER POLLUTION PREVENTION PLAN SHALL BE IN ACCORDANCE WITH SPECIFICATIONS AND DRAWING.

B PROTECT ALL EXISTING STORM INLETS IN AND AROUND AREA UNDER CONSTRUCTION.

C PROTECT ALL CULVERTS BY INSTALLING REINFORCED FILTER FABRIC BARRIER AT THE UPSTREAM OPENINGS.

D TYPICAL EROSION AND SEDIMENTATION CONTROLS DURING CONSTRUCTION ARE SHOWN.

E PROVIDE A STABILIZED CONSTRUCTION EXIT IN THE CONTRACTOR'S LAY DOWN/STORAGE AREA.

F OTHER EROSION/SEDIMENTATION CONTROLS INCLUDE:
1 DAILY STREET SWEEPING.
2 INSPECTION AND MAINTENANCE PER APPROVED EROSION AND SEDIMENTATION CONTROL PLAN.

Z

LEGEND

- RFB — REINFORCED FILTER FABRIC BARRIER.
- FF — FILTER FABRIC FENCE
- IPB — INLET PROTECTION BARRIER
- SC — STABILIZED CONSTRUCTION EXIT
- F — FLOW DIRECTION

TO ARRANGE FOR LINES TO BE TURNED OFF MOVED, CALL CENTERPOINT AT 713-207-222

PRIVATE UTILITY LINES SHOWN

AT LEAST 48 HOURS BEFORE EXCAVATING IN STREET R.O.W. EASEMENTS CALL THE LONE STAR NOTIFICATION 713-223-45

Date:

CenterPoint Energy/Electric Facilities
Signature indicates underground electric lines are properly shown. No approval for construction is given.

Date:

Approved for SBC underground facilities only.
Signature valid for one year,

Date:

CenterPoint Energy/Gas Facilities/ENTEX Incorporated
(Gas service lines are not shown)

CABLE COMPANY

DATE	REVISION	BY

iSani CONSULTANTS
3143 YELLOWSTONE BLVD
HOUSTON, TX 77054
TEL: (713) 747-3388 FAX: (713) 748-3748
TBPE FIRM REGISTRATION # 4575

STATE OF TEXAS
VINCENT N. JACOB
98325
LICENSED PROFESSIONAL ENGINEER
3/18/13

LJA Engineering Inc.
2929 Briarpark Drive
Suite 600
Houston, Texas 77042
Phone 713.953.520
Fax 713.953.502
FRN - F-1386

SURVEYED BY: AMANI ENG. FB NO.: P-5679

CITY OF HOUSTON

DEPARTMENT OF PUBLIC WORKS AND ENGINEERING

ALMEDA SIMS WWTP & SPF IMPROVEMENTS PACKAGE-3

STORM WATER POLLUTION PREVENTION PLAN SHEET 1 OF 2

WBS NUMBER	R-000298-0008-4
DRAWING SCALE	SCALE: 1" = 30'
CITY OF HOUSTON, PM	IRAJ RANJBAR, P.E.
SHEET NO.	53 OF 117

PUBLIC WORKS & ENGINEERING
50431
HOUSTON, TEXAS

53

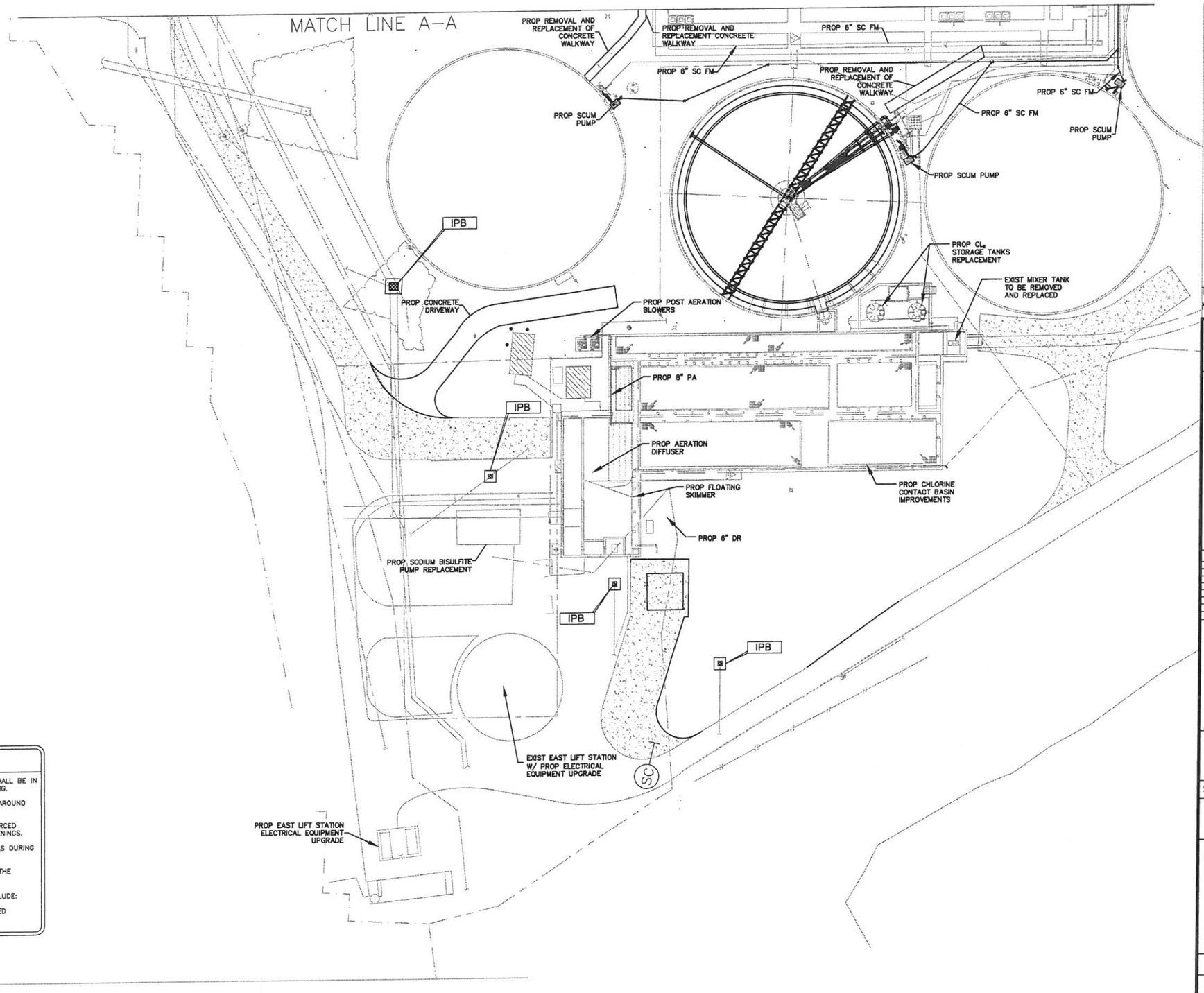

Z

LEGEND

- RFB — REINFORCED FILTER FABRIC BARRIER.
- FF — FILTER FABRIC FENCE
- IPB — INLET PROTECTION BARRIER
- SC — STABILIZED CONSTRUCTION EXIT
- F — FLOW DIRECTION

NOTES

A STORM WATER POLLUTION PREVENTION PLAN SHALL BE IN ACCORDANCE WITH SPECIFICATIONS AND DRAWING.

B PROTECT ALL EXISTING STORM INLETS IN AND AROUND AREA UNDER CONSTRUCTION.

C PROTECT ALL CULVERTS BY INSTALLING REINFORCED FILTER FABRIC BARRIER AT THE UPSTREAM OPENINGS.

D TYPICAL EROSION AND SEDIMENTATION CONTROLS DURING CONSTRUCTION ARE SHOWN.

E PROVIDE A STABILIZED CONSTRUCTION EXIT IN THE CONTRACTOR'S LAY DOWN/STORAGE AREA.

F OTHER EROSION/SEDIMENTATION CONTROLS INCLUDE:
1 DAILY STREET SWEEPING.
2 INSPECTION AND MAINTENANCE PER APPROVED EROSION AND SEDIMENTATION CONTROL PLAN.

TO ARRANGE FOR LINES TO BE TURNED OFF C
MOVED, CALL CENTERPOINT AT 713-207-2222

PRIVATE UTILITY LINES SHOWN

AT LEAST 48 HOURS BEFORE EXCAVATING IN STREET R.O.W. (
EASEMENTS CALL THE LONE STAR NOTIFICATION 713-223-4567

Date:

CenterPoint Energy/Electric Facilities
Signature indicates underground electric lines are properly shown. No approval for construction is given.

Date:

Approved for SBC underground facilities only.
Signature valid for one year.

Date:

CenterPoint Energy/Gas Facilities/ENTEX Incorporated
(Gas service lines are not shown)

CABLE COMPANY

DATE	REVISION	BY

iSani CONSULTANTS
3143 YELLOWSTONE BLVD
HOUSTON, TX 77054
TBPE FIRM REGISTRATION # 4575

STATE OF TEXAS
VINCENT N. JACOB
98325
LICENSED PROFESSIONAL ENGINEER
3/18/13

LJA Engineering Inc.
2929 Briarpark Drive
Suite 600
Houston, Texas 77042
Phone 713.953.5200
Fax 713.953.5026
FRN - F-1386

SURVEYED BY: AMANI ENG. FB NO.: P-5679

CITY OF HOUSTON
DEPARTMENT OF PUBLIC WORKS AND ENGINEERING

ALMEDA SIMS WWTP & SPF IMPROVEMENTS PACKAGE-3

STORM WATER POLLUTION PREVENTION PLAN
SHEET 2 OF 2

WBS NUMBER
R-000298-0008-4

DRAWING SCALE
SCALE: 1" = 30'

CITY OF HOUSTON, PM
IRAJ RANJBAR, P.E.

SHEET NO. 54 OF 117

50431
REGISTERED
HOUSTON, TEXAS

54

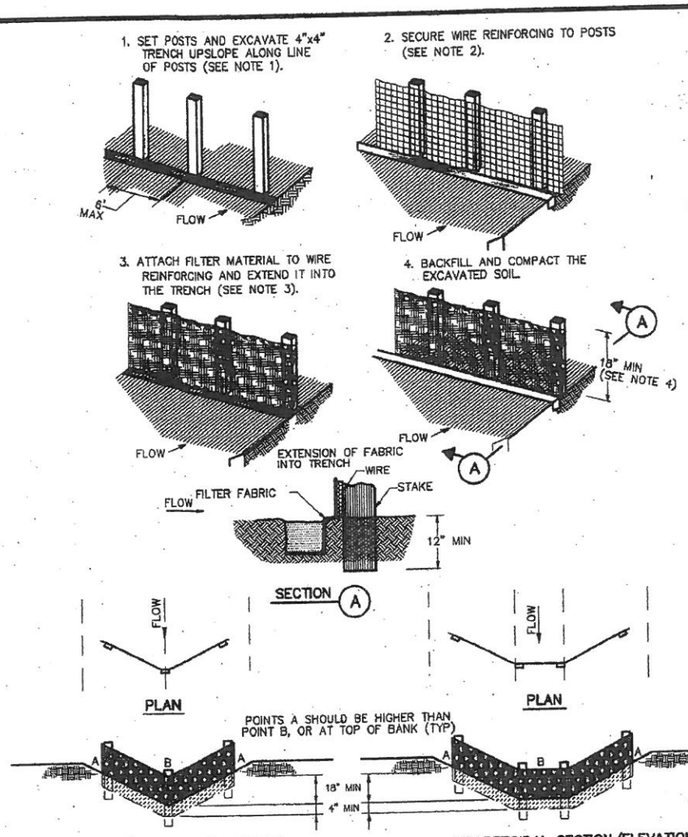

CONSTRUCTION NOTES:

1. SET 2 INCH BY 2 INCH WOODEN STAKES SPACED A MAX OF 6 FEET APART AND EMBEDDED A MIN OF 12 INCHES.
2. WOVEN WIRE REINFORCING TO BE FASTENED SECURELY TO BARRIER POSTS WITH STAPLES.
3. FILTER CLOTH TO BE FASTENED SECURELY TO WOVEN WIRE REINFORCING, WITH TIES SPACED EVERY 24 INCHES AT TOP AND MIDSECTION.
4. MINIMUM HEIGHT OF FILTER SHOULD BE 18 INCHES AND A MAXIMUM OF 36 INCHES ABOVE NATURAL GROUND.
5. WHEN TWO SECTIONS OF FILTER CLOTH ADJOIN EACH OTHER THEY SHALL BE OVERLAPPED 8 INCHES AT THE POSTS, AND FOLDED.
6. SEE COH STANDARD SPECIFICATION FOR FILTER FABRIC BARRIER.

×—(RFB)—× SYMBOL

REINFORCED FILTER FABRIC BARRIER

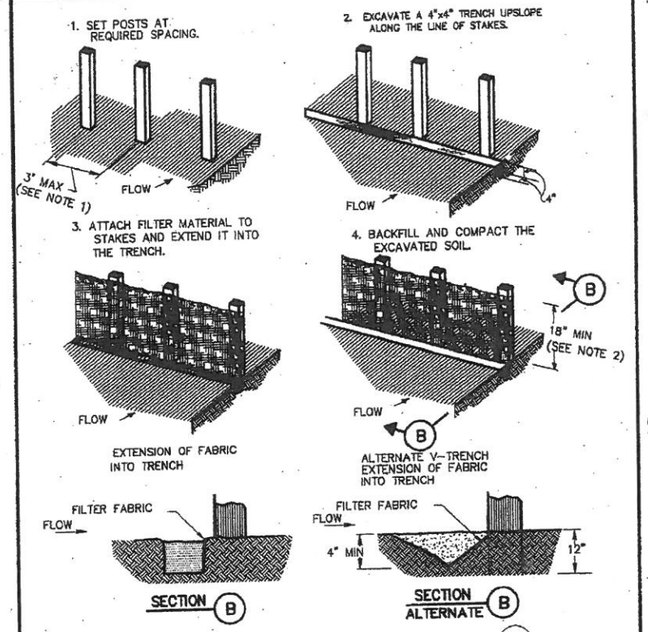

CONSTRUCTION NOTES:

1. 2 INCH THICK BY 2 INCH WOODEN STAKES TO BE SET AT MAX SPACING OF 3 FEET AND EMBEDDED A MIN OF 8 INCHES. IF PREASSEMBLED BARRIER WITH SUPPORT NETTING IS USED, SPACING OF POST MAY BE INCREASED TO 8 FEET MAX.
2. ATTACH FILTER FABRIC TO WOODEN STAKES. FILTER FABRIC BARRIER SHALL HAVE A MIN HEIGHT OF 18 INCHES AND MAX HEIGHT OF 36 INCHES ABOVE NATURAL GROUND.
3. WHEN TWO SECTIONS OF FILTER CLOTH ADJOIN EACH OTHER THEY SHOULD BE OVERLAPPED 6 INCHES AT THE POSTS, AND FOLDED.
4. SEE COH STANDARD SPECIFICATION FOR FILTER FABRIC BARRIER.

×—(FF)—× SYMBOL

FILTER FABRIC BARRIER

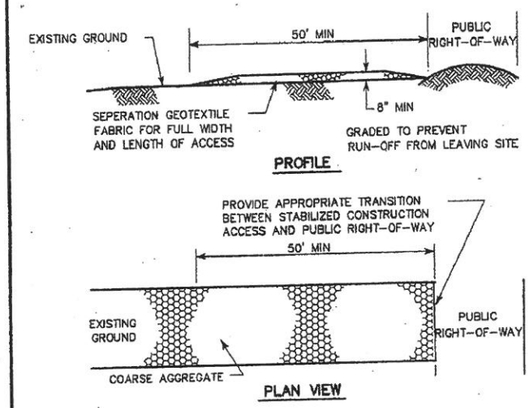

CONSTRUCTION NOTES:

1. LENGTH SHALL BE AS SHOWN ON THE CONSTRUCTION DRAWINGS, BUT NOT LESS THAN 50 FEET.
2. THICKNESS SHALL BE NOT LESS THAN 8 INCHES.
3. WIDTH SHALL BE NOT LESS THAN FULL WIDTH OF ALL POINTS OF INGRESS OR EGRESS.
4. STABILIZATION FOR OTHER AREAS SHALL HAVE THE SAME AGGREGATE THICKNESS AND WIDTH REQUIREMENTS AS THE STABILIZED CONSTRUCTION ACCESS, UNLESS OTHERWISE SHOWN ON THE CONSTRUCTION DRAWINGS.
5. STABILIZED AREA MAY BE WIDENED OR LENGTHENED TO ACCOMODATE A WASHING AREA. AN OUTLET SEDIMENT TRAP MUST BE PROVIDED FOR THE WASHING AREA.
6. COH STANDARD SPECIFICATION FOR STABILIZED CONSTRUCTION ACCESS.
7. STABILIZED CONSTRUCTION ACCESS SHALL BE MAINTAINED FREE OF SEDIMENT FOR THE DURATION OF THE PROJECT.

(SC) SYMBOL

STABILIZED CONSTRUCTION ACCESS

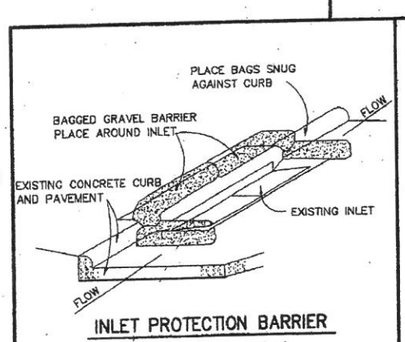

INLET PROTECTION BARRIER

(FOR STAGE II INLETS)
BAGGED GRAVEL BARRIER

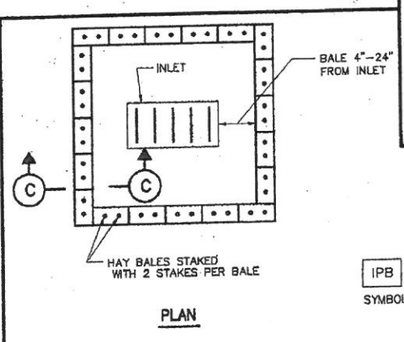

HAY BALE INLET PROTECTION BARRIER

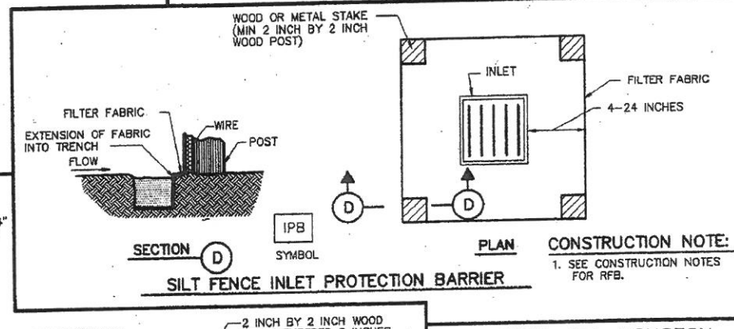

SILT FENCE INLET PROTECTION BARRIER

CONSTRUCTION NOTE:

1. SEE CONSTRUCTION NOTES FOR RFB.

CITY OF HOUSTON
DEPARTMENT OF PUBLIC WORKS AND ENGINEERING

STORM WATER POLLUTION PREVENTION PLAN DETAILS

(NOT TO SCALE)

APPROVED CITY ENGINEER	APPROVED DIRECTOR OF PUBLIC WORKS AND ENGINEERING
EFF DATE: JULY-01-2010	DWG NO: 01571-01

TO ARRANGE FOR LINES TO BE TURNED OFF O
MOVED, CALL CENTERPOINT AT 713-207-2222

PRIVATE UTILITY LINES SHOWN

AT LEAST 48 HOURS BEFORE EXCAVATING IN STREET R.O.W. (EASEMENTS CALL THE LONE STAR NOTIFICATION 713-223-4567

Date:

CenterPoint Energy/Electric Facilities
Signature indicates underground electric lines are properly shown. No approval for construction is given.

Date:

Approved for SBC underground facilities only.
Signature valid for one year,

Date:

CenterPoint Energy/Gas Facilities/ENTEX Incorporated
(Gas service lines are not shown)

CABLE COMPANY

DATE	REVISION	BY

iSani CONSULTANTS
3143 YELLOWSTONE BLVD
HOUSTON, TX 77054
TEL: (713) 747-3388 FAX: (713) 748-3748
TBPE FIRM REGISTRATION # 4575

STATE OF TEXAS
VINCENT N. JACOB
98325
LICENSED PROFESSIONAL ENGINEER
3/18/13

LJA Engineering Inc.
2929 Briarpark Drive
Suite 600
Houston, Texas 77042
Phone 713.953.5200
Fax 713.953.5026
FRN - F-1386

SURVEYED BY: AMANI ENG. | FB NO.: P-5679

CITY OF HOUSTON
DEPARTMENT OF PUBLIC WORKS AND ENGINEERING

ALMEDA SIMS WWTP & SPF IMPROVEMENTS PACKAGE-3

STORM WATER POLLUTION PREVENTION PLAN DETAILS

WBS NUMBER	R-000298-0008-4
DRAWING SCALE	SCALE: N/A
CITY OF HOUSTON, PM	IRAJ RANJBAR, P.E.
SHEET NO.	55 OF 117

55

SYMBOL	DESCRIPTION
A 3 b	INCANDESCENT, COMPACT FLUORESCENT OR H.I.D. TYPE LIGHTING FIXTURE "A" – FIXTURE TYPE "b" – CONTROLLED BY SWITCH "b" "3" – CIRCUIT NUMBER
b A LA–X	FLUORESCENT TYPE LIGHTING FIXTURE, NOTATIONS SAME AS ABOVE
A OR 3 A	INDICATES LIGHT FIXTURES WHICH ARE UNSWITCHED
A 3 b	WALL OUTLET AND INCANDESCENT, COMPACT FLUORESCENT OR H.I.D. TYPE LIGHTING FIXTURE, NOTATIONS SAME AS ABOVE
A 3 b	POLE MOUNTED LIGHTING FIXTURE, NOTATIONS SAME AS ABOVE
A	EMERGENCY LIGHTING BATTERY UNIT WITH TWO LAMP HEADS "A" – FIXTURE TYPE
A	REMOTE EMERGENCY ADJUSTABLE WALL LIGHTING FIXTURE WITH TWO LAMP HEADS "A" – FIXTURE TYPE
X	CEILING MOUNTED EXIT SIGN "X" – FIXTURE TYPE
X	WALL OUTLET EXIT SIGN, ARROW INDICATES DIRECTION OF EGRESS "X" – FIXTURE TYPE
	CONDUIT, EXPOSED/SURFACE MOUNTED
	CONDUIT OR DUCTBANK, CONCEALED
	CONDUIT, EXPOSED/SURFACE MOUNTED, TURNING UP
	CONDUIT, EXPOSED/SURFACE MOUNTED, TURNING DOWN
	CONDUIT STUBBED OUT AND CAPPED
2(3"C, 3#3/0 & 1#2 GRD)	DENOTES A QUANTITY OF TWO (2) 3–INCH CONDUITS EACH CONTAINING THREE (3) NO. 3/0 AWG CONDUCTORS AND ONE (1) NO. 2 AWG GROUND CONDUCTOR.
2–2/C#16TS	DENOTES A QUANTITY OF TWO (2) INSTRUMENT CABLES. EACH CABLE TO CONSIST OF TWO NO. 16 AWG CONDUCTORS TWISTED TOGETHER AND COVERED WITH A METALLIC SHIELD AND AN OVERALL PROTECTIVE JACKET. REFER TO THE SPECIFICATIONS FOR THE EXACT CABLE TO BE PROVIDED.
3–4"C	THREE 4–INCH CONDUITS
	FLEXIBLE METAL CONDUIT "WHIP" (2#12, 1#12G, 3/4" C. UNLESS OTHERWISE NOTED) FOR RECESSED LIGHTING FIXTURES AND LIQUID TIGHT MOTOR CONNECTIONS
LP1–1,3	HOMERUN, CIRCUITS 1 AND 3 RUN TO PANEL LP–1
$b	SINGLE POLE SWITCH "b" INDICATES SWITCH LEG SHALL CONTROL LIGHT FIXTURES WITH "b" DESIGNATION
$a x	MULTI POLE SWITCH "x" INDICATES NUMBER OF POLE "a" INDICATES SWITCH SHALL CONTROL LIGHT FIXTURES WITH "a" DESIGNATION
$M	MANUAL MOTOR STARTER /DISCONNECT
$P	SINGLE POLE SWITCH AND PILOT LIGHT
TYPE A	INDICATES ALL LIGHTING FIXTURES WITHIN THE ROOM OR AREA IN WHICH THIS NOTATION APPEARS SHALL BE TYPE "A" UNLESS OTHERWISE NOTED. SEE LIGHTING FIXTURE SCHEDULE FOR TYPES.
	VACUUM FAULT INTERRUPTER
OR L*–** L*–**	LIGHTING PANELBOARD (TYPICAL 120V/240V OR 120V/208V)
OR H*–** H*–**	DISTRIBUTION PANELBOARD (TYPICAL 277V/480V)
* 4	DUPLEX RECEPTACLE, 20A, 120V, 2P, 3W * C – MOUNTED ABOVE COUNTERTOP GF – GROUND FAULT INTERRUPTER TYPE WP – WEATHERPROOF T – TRANSIENT VOLTAGE SURGE SUPPRESSER 4 – CIRCUIT NUMBER

SYMBOL	DESCRIPTION
	60A, 480V, 3P, 4W WELDING RECEPTACLE
P	PULL BOX
TC	TERMINAL CABINET
M	MOTOR
DAMP	INDICATES THAT ALL ELECTRICAL EQUIPMENT AND MATERIALS INSTALLED WITHIN THE ROOM OR AREA IN WHICH THIS NOTATION APPEARS SHALL BE OF NEMA 12 CONSTRUCTION UNLESS OTHERWISE NOTED.
WET	INDICATES THAT ALL ELECTRICAL EQUIPMENT AND MATERIALS INSTALLED WITHIN THE ROOM OR AREA IN WHICH THIS NOTATION APPEARS SHALL BE OF NEMA 4 CONSTRUCTION UNLESS OTHERWISE NOTED.
CORROSIVE	INDICATES THAT ALL ELECTRICAL EQUIPMENT AND MATERIALS INSTALLED WITHIN THE ROOM OR AREA IN WHICH THIS NOTATION APPEARS SHALL BE OF NEMA 4X CONSTRUCTION UNLESS OTHERWISE NOTED.
CLASS 1, DIV. 1, GROUP D	INDICATES THAT ALL ELECTRICAL EQUIPMENT AND MATERIALS INSTALLED WITHIN THE ROOM OR AREA IN WHICH THIS NOTATION APPEARS SHALL CONFORM TO N.E.C REQUIREMENTS FOR THE HAZARDOUS AREA CLASSIFICATION SHOWN.

ONE LINE OR CONTROL DIAGRAM	PLAN	DESCRIPTION
(E.O.) FRAME / TRIP	CB	LOW VOLTAGE CIRCUIT BREAKER, 3 POLE UNLESS OTHERWISE NOTED.
*	*	COMBINATION MOTOR CIRCUIT PROTECTOR AND MAGNETIC MOTOR STARTER, FULL VOLTAGE NON–REVERSING UNLESS OTHERWISE NOTED: * FVR– FULL VOLTAGE REVERSING RVNR–REDUCED VOLTAGE NON–REVERSING 2S1W– TWO SPEED, ONE WINDING 2S2W– TWO SPEED, TWO WINDING
*		NON–FUSIBLE DISCONNECT SWITCH, 600 VOLT, 3 POLE * AMPERE RATING NOTED IF OTHER THAN 30A
* *	F	FUSIBLE DISCONNECT SWITCH, 600 VOLT, 3 POLE, AMPERE RATING AND FUSE SIZE AS NOTED * AMPERE RATING NOTED IF OTHER THAN 30A * FUSE RATING EXAMPLE 15
MIS	I	MOTOR ISOLATION SWITCH, HORSEPOWER RATED
		DRAWOUT TYPE EQUIPMENT OR DEVICE
480V Δ – 120/208Y 30 KVA K–*	T	TRANSFORMER, RATINGS AND CONNECTIONS AS NOTED. UNLESS OTHERWISE NOTED ON THE SINGLE LINE DIAGRAMS ALL DRY TYPE TRANSFORMERS SERVING ADMINISTRATIVE AND LABORATORY SPACES SHALL HAVE A K FACTOR OF 13. ALL OTHER DRY TYPE TRANSFORMERS SHALL HAVE A K–4 RATING. ISOLATION TRANSFORMERS SHALL HAVE A K–20 RATING
* A:5		CURRENT TRANSFORMER * QUANTITY A = PRIMARY AMPERES
* PV–5V		POTENTIAL TRANSFORMER * QUANTITY PV = PRIMARY VOLTAGE SV = SECONDARY VOLTAGE
100A ATS–1 N S		TRANSFER SWITCH AUTOMATIC TRANSFER SWITCH (EG ATS–1) MANUAL TRANSFER SWITCH (EG MTS–1) "N" INDICATES NORMAL SOURCE "S" INDICATES STANDBY SOURCE 100A INDICATES CONTINUOUS CURRENT RATING
5	M	MOV WITHOUT INTEGRATED DISCONNECT
5	M	MOV WITH INTEGRATED DISCONNECT
*	*	VARIABLE SPEED DRIVE CONTROLLER * DC = DC DRIVE CONTROLLER SCR= SILICON CONTROLLED RECTIFIER VFD= VARIABLE FREQUENCY DRIVE
5KW	E	UNIT HEATER – ELECTRIC HEATING COIL AND FAN
5	M	MOTOR, NUMERAL INDICATES HORSEPOWER
		REMOTE DEVICES
*		SPECIAL CAPACITOR * SC – SURGE CAPACITOR PF – POWER FACTOR CORRECTION CAPACITOR INCLUDING INDUCTIVE LINK AS NEEDED
		PUSH BUTTON, MOMENTARY CONTACT, SPRING RETURN, NORMALLY CLOSED

ONE LINE OR CONTROL DIAGRAM	PLAN	DESCRIPTION
		PUSH BUTTON, MOMENTARY CONTACT, SPRING RETURN, NORMALLY OPEN
	ES	EMERGENCY STOP PUSH BUTTON WITH RED MUSHROOM HEAD OPERATOR (MAINTAINED CONTACT)
START STOP	PBL	START–STOP PUSH BUTTON CONTROL STATION (MOMENTARY CONTACT) "L" DENOTES LOCKOUT TYPE
STOP START	PBM	START–STOP PUSH BUTTON CONTROL STATION, MAINTAINED CONTACT WITH LOCKOUT DEVICE ON STOP
OFF ON	S/S	OFF/ON SELECTOR SWITCH
A B C * (XOO) (OOX)	*	3 POSITION SELECTOR SWITCH, MAINTAINED CONTACT O–OPEN X–CLOSED POSITION / TOP CONTACT / MIDDLE CONTACT / BOTTOM CONTACT A / X / O / O B / O / O / O C / O / O / X *NAMEPLATE (A/B/C) HOA –HAND/OFF/AUTO HOR –HAND/OFF/REMOTE LOR – LOCAL/OFF/REMOTE RSL – RAISE/STOP/LOWER TOA – TEST/OFF/AUTO NOTE: 2 POSITION MULTI–CONTACT SWITCH FOLLOWS SAME CONVENTION
M *		MOTOR STARTER COIL, NUMBER AS INDICATED
CR *		CONTROL RELAY COIL, NUMBER AS INDICATED
*		PILOT LIGHT, COLOR AS NOTED * R – RED G – GREEN B – BLUE W – WHITE A – AMBER
* PTT		PILOT LIGHT, PUSH–TO–TEST TYPE, COLOR AS NOTED ABOVE. (PUSH–TO–TEST SHALL BE REQUIRED AT ALL PILOT LIGHT LOCATIONS, INCLUDING MFR SUPPLIED PANELS)
TD		TIME DELAY RELAY RANGE AS NOTED SETPOINT AS NOTED TDD–TIME DELAY AFTER DE–ENERGIZATION–OFF DELAY TDE–TIME DELAY AFTER ENERGIZATION–ON DELAY
		NOTC–NORMALLY OPEN, TIMED CLOSING WHEN ENERGIZED
		NCTO–NORMALLY CLOSED, TIMED OPENING WHEN ENERGIZED
		NOTO–NORMALLY OPEN, TIMED OPENING WHEN DE–ENERGIZED
		NCTC–NORMALLY CLOSED, TIMED CLOSING WHEN DE–ENERGIZED
* – ##		FIELD INSTRUMENT, TAG NO. AS INDICATED * – INDICATES INSTRUMENT TYPE DEFINED ON LOOP SHEETS ## – INDICATES LOOP NO.
	LS OR	LIQUID LEVEL (FLOAT) SWITCH NORMALLY OPEN, CLOSES ON RISING LEVEL NORMALLY CLOSED, OPENS ON RISING LEVEL
	PS OR	PRESSURE OR VACUUM SWITCH NORMALLY OPEN, CLOSES ON RISING PRESSURE NORMALLY OPEN, CLOSES ON DROPPING PRESSURE NORMALLY CLOSED, OPENS ON RISING PRESSURE NORMALLY CLOSED, OPENS ON DROPPING PRESSURE
	TS OR T	TEMPERATURE SWITCH OR THERMOSTAT NORMALLY OPEN, CLOSES ON RISING TEMPERATURE NORMALLY OPEN, CLOSES ON DROPPING TEMP. NORMALLY CLOSED, OPENS ON RISING TEMPERATURE NORMALLY CLOSED, OPENS ON DROPPING TEMP.
	FS OR	FLOW SWITCH (AIR, WATER, ETC.) NORMALLY OPEN, CLOSES ON INCREASED FLOW NORMALLY CLOSED, OPENS ON INCREASED FLOW

ONE LINE OR CONTROL DIAGRAM	PLAN	DESCRIPTION
	ZS OR	POSITION (LIMIT) SWITCH NORMALLY OPEN NORMALLY OPEN – HELD CLOSED NORMALLY CLOSED NORMALLY CLOSED – HELD OPEN
	TQ OR	TORQUE SWITCH NORMALLY CLOSED, OPENS ON HIGH TORQUE
		CONDUCTORS OR CONDUITS CROSSING PATHS BUT NOT CONNECTED
		CONDUCTORS ELECTRICALLY CONNECTED
		INDICATES LIMITS OF EQUIPMENT OR WIRING ENCLOSURE
LA		LIGHTNING ARRESTER
		GROUND OR GROUND ROD GROUND ROD WELL
30A		FUSE, AMPERE RATING AS NOTED
	HTR	STRIP HEATER OR HEATING ELEMENT
		INDUCTOR
		CONTACT, NORMALLY OPEN (NO)
		CONTACT, NORMALLY CLOSED (NC)
		OVERLOAD RELAY HEATER
	K	KEY INTERLOCK
	TB	TERMINAL OR TEST BLOCK
	RTD	RESISTANCE TEMPERATURE DETECTOR
	VE	VIBRATION DETECTOR
	DM	DAMPER MOTOR
ETM OR		ELAPSED TIME METER
MOV	MOV	MOTOR OPERATED VALVE
	X	EXPLOSION PROOF CONDUIT SEALING FITTING

ABBREVIATIONS

AC	ALTERNATING CURRENT
AFD	ADJUSTABLE FREQUENCY DRIVE
AFF	ABOVE FINISHED FLOOR
AG	ABOVE GRADE
ALUM	ALUMINUM
AMP/A	AMPERE
ATS	AUTOMATIC TRANSFER SWITCH
AUTO	AUTOMATIC
AUX	AUXILIARY
AWG	AMERICAN WIRE GAUGE
C	CONDUIT
CB	CIRCUIT BREAKER
CKT	CIRCUIT
CLF	CURRENT LIMITING FUSE
CP	CONTROL PANEL
CPT	CONTROL POWER TRANSFORMER
CR	CONTROL RELAY
CS	CONTROL SWITCH
CT	CURRENT TRANSFORMER
CU	COPPER
DC	DIRECT CURRENT
DI	DOOR INTERLOCK
DN	DOWN
DWG	DRAWING
EHH	ELECTRICAL HAND HOLE
EC	EMPTY CONDUIT
ELEC	ELECTRICAL
ELEV	ELEVATION
	CONTINUED ABOVE RIGHT

	CONTINUED BELOW LEFT
LP	LIGHTING PANEL
MCC	MOTOR CONTROL CENTER
MCP	MOTOR CIRCUIT PROTECTOR
MFR	MANUFACTURER
MH	MANHOLE
MLO	MAIN LUGS ONLY
MTG	MOUNTING
MTD	MOUNTED
MTS	MANUAL TRANSFER SWITCH
NC	NORMALLY CLOSED
NO	NORMALLY OPEN OR NUMBER
NTS	NOT TO SCALE
OL	OVERLOAD
OLX	OVERLOAD CONTROL RELAY
PB	PUSH BUTTON
PCC	PUMP CONTROL CONSOLE
PPR	PHASE PROTECTIVE RELAY
PFR	PHASE FAILURE RELAY
PH	PHASE
PR	PAIR
PT	POTENTIAL TRANSFORMER
PTT	PUSH TO TEST TYPE
PVC	POLYVINYL CHLORIDE
QTY	QUANTITY
RCP	RELAY CONTROL PANEL
RECP	RECEPTACLES
SC	SURGE CAPACITOR
SCH	SCHEMATIC
SCCR	SHORT CIRCUIT CURRENT RATING
SEC	SECONDS OR SECONDARY
SH	SHIELDED OR SHEET
SHT	SHEET

	CONTINUED BELOW LEFT
EM	EMERGENCY
EMH	ELECTRICAL MAN HOLE
EO	ELECTRICALLY OPERATED
FBO	FURNISHED BY OTHERS
FO	FIBER OPTIC
FRP	FIBERGLASS REINFORCED POLYESTER
FU	FUSE
GCP	GENERATOR CONTROL PANEL
GEN	GENERATOR
G, GRD	GROUND
GFI	GROUND FAULT INTERRUPTER
GO	GATE OPERATOR
GRS	GALVANIZED RIGID STEEL
HH	HANDHOLE
HT	HEIGHT
HTP	HEAT TRACE PANEL
HZ	HERTZ
IMH	INSTRUMENT MAN HOLE
INST	INSTRUMENT
LA	LIGHTNING ARRESTER
LC	LIGHTNING CONTACTOR
LCP	LOCAL CONTROL PANEL
LGTS	LIGHTS
	CONTINUED ABOVE RIGHT

	CONTINUED BELOW LEFT
SN	SOLID NEUTRAL
SPD	SURGE PROTECTIVE DEVICE
SS	STAINLESS STEEL
ST	STARTER
SV	SOLENOID VALVE
SW	SWITCH
SWBD	SWITCHBOARD
SWGR	SWITCHGEAR
TC	TERMINATION CABINET
TEL	TELEPHONE
TO	TIME DELAY ON OPENING
TS	TEMPERATURE SWITCH
TVSS	TRANSIENT VOLTAGE SURGE SUPP.
TSW	TWISTED SHIELDED WIRE
TYP	TYPICAL
UG	UNDERGROUND
V	VOLTS
VFD	VARIABLE FREQUENCY DRIVE
VO	VALVE OPERATOR
W	WIRE
WP	WEATHERPROOF
XP	EXPLOSION PROOF
XFMR	TRANSFORMER

LEGEND:

MCC–C (A1) CONTROL AND ANALOG WIRE AND CONDUIT.
MCC–BL (C1)
BREAKER #

PROGRAMMABLE LOGIC CONTROLLER – D
PLD–101
CONDUIT #

X1 CONDUIT AND WIRE

DATE	REVISION	BY

GAI
Gupta & Associates, Inc.
consulting engineering
Registration No. F-2593
7322 Southwest Freeway Suite 410
Houston, Texas 77074
Tel: 713-636-2930
Fax: 713-636-7987
email: hforouzan@gaiconsulting.com

03/15/2013
STATE OF TEXAS
H. A. FOROUZAN
77748
REGISTERED
PROFESSIONAL ENGINEER

LJA Engineering Inc.
2929 Briarpark Drive
Suite 600
Houston, Texas 77042
Phone 713.953.5200
Fax 713.953.5026
FRN - F-1386

SURVEYED BY: AMANI ENG. | FB NO.: P–5679

CITY OF HOUSTON

DEPARTMENT OF PUBLIC WORKS AND ENGINEERING

ALMEDA SIMS WWTP & SPI IMPROVEMENTS PACKAGE–3

ELECTRICAL LEGEND & SYMBOLS

WBS NUMBER	R–000298–0008–4
DRAWING SCALE	NTS
CITY OF HOUSTON, PM	IRAJ RANJBAR, P.E.
SHEET NO.	56 OF 117

PUBLIC WORKS & ENGINEERING
50431
CITY ENGINEER
HOUSTON, TEXAS

DWG: E–01

Z:\1814_Houston Almeda Sims WWTP Improvement\Drawings\Electrical\Working\E–01.dwg

ELECTRICAL GENERAL NOTES

1. THE NOTES CONTAINED ON THIS SHEET ARE PROVIDED FOR THE CONVENIENCE OF THE CONTRACTOR WHEN WORKING IN THE FIELD, AND CONTAIN EXCERPTS FROM THE SPECIFICATION SECTIONS. HOWEVER THE CONTRACTOR IS HEREBY ADVISED THAT THE CONTRACT DOCUMENTS CONSIST OF BOTH THE DRAWINGS AND THE SPECIFICATIONS, AND THAT THE CONTRACTOR MUST COMPLY FULLY WITH BOTH THE BOUND DRAWINGS AND THE BOUND SPECIFICATIONS.

2. ALL EQUIPMENT WIRING, RACEWAYS, ETC. SHALL BE INSTALLED AND GROUNDED IN ACCORDANCE WITH THE LATEST EDITION OF THE NATIONAL ELECTRICAL CODE, LOCAL CODES, AND INDUSTRY STANDARDS (IE. UL, NEMA, IEEE, ANSI, ETC.) THE DRAWING NOTES AND DETAILS SHALL BE COMPLIED WITH IN ADDITION TO THE REQUIREMENTS IN THE SPECIFICATIONS. REFER TO EACH SPECIFICATION SECTION FOR SPECIFIC REQUIREMENTS.

3. ALL RACEWAY INSTALLATIONS SHALL BE INSTALLED IN A MANNER TO PREVENT CONFLICTS WITH EQUIPMENT AND STRUCTURAL CONDITIONS. ALL EXPOSED RACEWAY SHALL BE INSTALLED PARALLEL TO BEAMS, CEILINGS, FLOORS AND WALLS. SEE SPECIFICATION ON RACEWAYS FOR ADDITIONAL REQUIREMENTS.

4. CONDUITS SHALL BE TERMINATED IN A NEAT MANNER AND STRICTLY IN ACCORDANCE WITH THE SPECIFICATIONS AND DRAWING DETAILS.

5. CONDUITS TERMINATED INTO ENCLOSURES SHALL BE PERPENDICULAR TO THE WALLS OF THE ENCLOSURE. THE USE OF SHORT SEALTIGHT ELBOW FITTINGS FOR SUCH TERMINATIONS WILL NOT BE PERMITTED.

6. ALL RACEWAY INSTALLATIONS, CROSSING EXPANSION JOINTS OR TRANSITIONS FROM BELOW GRADE TO EXPOSED ABOVE GRADE, SHALL HAVE EXPANSION OR EXPANSION/DEFLECTION TYPE FITTINGS AS SPECIFIED FOR THE APPLICATION. SEE THE DRAWINGS AND THE SPECIFICATION ON RACEWAYS FOR THE EXACT TYPE OF FITTING TO BE USED.

7. NO CONDUIT SMALLER THAN 3/4", NOR WIRE SMALLER THAN NO. 12 AWG, SHALL BE USED UNLESS SPECIFICALLY NOTED.

8. ALL UNDERGROUND SINGLE CONDUITS, AND DUCTBANKS OF MULTIPLE CONDUITS, SHALL BE SCH. 80 PVC CONDUIT, ENCASED IN REINFORCED RED CONCRETE, AND THE CONCRETE DYED RED BEFORE PLACEMENT, AS SPECIFIED. MINIMUM SIZE SHALL BE 1 INCH. THE CONTRACTOR SHALL FIELD VERIFY THE ROUTING OF ALL EXISTING UNDERGROUND CONDUIT AND DUCTBANKS AND SHALL COORDINATE THE ROUTING OF NEW CONDUIT AND DUCTBANKS TO AVOID INTERFERENCE WITH EXISTING CONDUIT AND DUCTBANKS AND OTHER UNDERGROUND UTILITIES.

9. ALL CHANGES OF DIRECTION GREATER THAN 20 DEGREES IN UNDERGROUND SINGLE, OR DUCTBANKS OF MULTIPLE CONDUITS, SHALL BE ACCOMPLISHED USING PVC COATED RIGID STEEL LONG RADIUS BENDS. BENDS OF PVC CONDUIT GREATER THAN 20 DEGREES, OR THE USE OF FLEXIBLE CONDUIT OF ANY TYPE, WILL NOT BE PERMITTED. SEE THE SPECIFICATIONS FOR MORE REQUIREMENTS.

10. LIQUID TIGHT FLEXIBLE STEEL CONDUIT SHALL BE USED FOR THE PRIMARY AND SECONDARY OF TRANSFORMERS, GENERATOR TERMINATIONS AND OTHER EQUIPMENT WHERE VIBRATION IS PRESENT. USE IN OTHER LOCATIONS IS NOT PERMITTED, EXCEPT FOR CONNECTIONS TO INSTRUMENTATION TRANSMITTERS, WHERE MULTIPLE PENETRATIONS ARE REQUIRED. LIQUID TIGHT FLEXIBLE STEEL CONDUIT SHALL HAVE A MAXIMUM LENGTH NOT GREATER THAN THAT OF A FACTORY MANUFACTURED LONG RADIUS ELBOW OF THE CONDUIT SIZE BEING USED. THE MAXIMUM BENDING RADIUS SHALL NOT BE LESS THAN THAT SHOWN IN THE NEC CHAPTER 9, TABLE 2, "OTHER BENDS". BX OR AC TYPE PREFABRICATED CABLES WILL NOT BE PERMITTED.

11. THE WIRING DIAGRAMS, BLOCK DIAGRAMS, QUANTITY, SIZE OF WIRES, AND CONDUIT REPRESENT A SUGGESTED ARRANGEMENT BASED UPON SELECTED STANDARD COMPONENTS OF ELECTRICAL EQUIPMENT. MODIFICATIONS ACCEPTABLE TO THE ENGINEER MAY BE MADE BY THE CONTRACTOR TO ACCOMMODATE EQUIPMENT ACTUALLY APPROVED. ALL MODIFICATIONS SHALL BE SUBMITTED TO THE ENGINEER FOR APPROVAL. THE BASIC SEQUENCE AND METHOD OF CONTROL MUST BE MAINTAINED AS INDICATED ON THE DRAWINGS AND/OR SPECIFIED.

12. FOR ALL JUNCTION BOXES, PULL BOXES AND TERMINATION BOXES IN THE RACEWAY SYSTEM IN NEMA 12 AREAS, BOXES SHALL BE OF STEEL. FOR NEMA 4X AREAS SEE SECTION 16111 FOR BOX DETAILS AND SPECIFICATIONS.

13. WHERE RACEWAYS ENTER JUNCTION BOXES OR CONTROL PANELS CONTAINING ELECTRICAL OR INSTRUMENTATION EQUIPMENT, ALL ENTRANCES SHALL BE SEALED WITH WATERTIGHT SEALANT. REFER TO THE SPECIFICATIONS FOR DETAILS.

14. ALL EQUIPMENT AND ELECTRICAL EQUIPMENT ENCLOSURE LOCATIONS, OR TERMINAL BOX LOCATIONS, ARE APPROXIMATE. THE EXACT LOCATIONS SHALL BE COORDINATED WITH AND APPROVED BY THE OWNER/ENGINEER, DURING CONSTRUCTION, AT NO ADDITIONAL COST TO THE OWNER.

15. ALL EQUIPMENT AND ELECTRICAL EQUIPMENT ENCLOSURES DIMENSIONS ARE APPROXIMATE. ALL EQUIPMENT AND ELECTRICAL EQUIPMENT ENCLOSURES OR TERMINAL BOX DIMENSIONS SHALL BE VERIFIED WITH THE EQUIPMENT SUPPLIER. ALLOW FOR LOCATION CHANGES AND INCLUDE IN THE CONTRACT PRICE. THE EXACT LOCATIONS OF ALL ELECTRICAL EQUIPMENT AND ROUTING OF ALL CABLES AND CONDUITS SHALL BE COORDINATED WITH AND APPROVED BY THE OWNER ENGINEER DURING CONSTRUCTION.

16. CORING OF AN EXISTING STRUCTURE SHALL BE COORDINATED WITH AND APPROVED BY THE OWNER/ENGINEER. CORING THROUGH STRUCTURAL BEAMS IS STRICTLY PROHIBITED, WITHOUT PRIOR WRITTEN APPROVAL FROM THE OWNER/ENGINEER.

17. THE LOCATION OF ALL ELECTRICAL EQUIPMENT AND ROUTING OF CABLES AND CONDUITS SHALL BE COORDINATED AND APPROVED BY THE OWNER.

18. THE DUCTBANK ROUTING AS SHOWN ON THE DRAWING IS APPROXIMATE. THE EXACT DUCTBANK ROUTING, CABLE LENGTH AND CONDUIT LENGTH SHALL BE VERIFIED IN THE FIELD.

19. PROVIDE CONDUIT SEALS FOR CONDUIT PENETRATIONS. SEE SECTION 16111 FOR DETAILS.

20. THIS IS AN OPERATING FACILITY. THE CONTRACTOR SHALL COORDINATE ALL WORK WITH THE OWNER.

21. THE CONTRACTOR SHALL BE RESPONSIBLE TO LOCATE ALL UNDERGROUND UTILITIES BEFORE DIGGING. CONTRACTOR SHALL COORDINATE THE EFFORT WITH THE OWNER.

22. ALL SLOTTED CHANNEL, SLOTTED CHANNEL SUPPORT MATERIAL, WASHERS, SCREWS, NUTS, CONDUIT CLAMPS, ALL THREAD SPRING NUTS AND MISC. MOUNTING HARDWARE SHALL BE 316 STAINLESS STEEL.

23. LIGHTING FIXTURES SHALL BE MOUNTED ACCORDING TO THE MOUNTING HEIGHT GIVEN ON THE DRAWINGS. THE MOUNTING HEIGHT SHALL BE MEASURED FROM THE BOTTOM OF THE LIGHTING FIXTURE TO THE FINISHED FLOOR.

24. CONDUIT AND WIRE (NOT SHOWN) FOR THE HVAC CONTROL EQUIPMENT AND MISCELLANEOUS DEVICES SHALL BE FURNISHED AND INSTALLED UNDER THE HVAC SPECIFICATIONS AND SHALL BE:

    A. 3/4" (MIN) RIGID STEEL.

    B. NO.14 XHHW CU. WIRE XHHW (MIN.) NUMBER OF WIRES AS REQUIRED.

    C. IN ACCORDANCE WITH ALL DIVISION 16 REQUIREMENTS.

25. ALL CONDUITS AND WIRES SHOWN ON THE INTERFACE DIAGRAM SHALL BE INSTALLED BY THE CONTRACTOR. GROUPING OF CONDUIT AND WIRE MAY BE CHANGED, IF APPROVED BY THE ENGINEER AND OWNER.

26. ALL CONDULETS SHALL BE FORM 7 AND SHALL HAVE 316 SS CLAMP COVERS WITH 316 SS CLAMPS AND SCREWS. SCREW DOWN COVERS ARE UNACCEPTABLE. REFER TO THE SPECIFICATIONS FOR MORE INFORMATION.

27. ALL BARE COPPER GROUNDING CONDUCTORS SHALL BE TINNED, ALL GROUND RODS SHALL BE COPPER CLAD STEEL, 3/4" BY 10' LONG. ALL EXPOSED COPPER GROUND CABLES SHALL BE GREEN INSULATED CONDUCTORS. PROVIDE XHHW INSULATION.

28. WHERE NOTES ON THE DRAWING INDICATE THAT THE CONTRACTOR SHALL FIELD-VERIFY, THE INTENT IS FOR THE CONTRACTOR TO INVESTIGATE TO THE EXTENT NECESSARY TO PROVIDE THE WORK AND MATERIALS PRIOR TO BIDDING AND INCLUDE ALL COSTS IN THE BID PRICE. THE CONTRACT PRICE SHALL NOT BE INCREASED WHEN THE CONTRACTOR HAS NOT INVESTIGATED PER THE NOTES DIRECTING THAT BE DONE.

CONDUIT TYPE	LOCATION
RIGID GALVANIZED CONDUIT	INSTALL IN DRY INSIDE, AIR CONDITIONED LOCATIONS ONLY.
PVC COATED STEEL CONDUIT	ALL EMBEDDED CONDUIT BENDS, UNDERGROUND DUCTBANK OF MORE THAN 20 DEGREES, AND ALL CONDUIT STUB-UPS TO A MINIMUM OF 6" ABOVE FINISHED FLOOR OR GRADE AND IN CHLORINE AND CAUSTIC ROOMS. ALL OUTDOOR LOCATIONS
LIQUID TIGHT FLEXIBLE STEEL CONDUIT	RACEWAY CONNECTION TO VIBRATING EQUIPMENT ONLY, IN ALL AREAS.
RIGID NON-METALLIC, SCHEDULE 80 PVC CONDUIT	UNDERGROUND ENCASED IN RED DYE REINFORCED CONCRETE.

CONCRETE SLAB REFERENCE NOTES

1 (triangle)

1. UNLESS OTHERWISE NOTED, CONCRETE SLABS ON GRADE WITH LENGTH OF 4 FEET AND SMALLER SHALL BE PER DETAIL "C" ON SHEET 36; LARGER SLABS SHALL BE PER DETAIL "A" ON SHEET 46.
2. CONCRETE HOUSEKEEPING PADS SHALL BE PER CONCRETE PAD DETAIL ON SHEET 67.
3. CONCRETE DESIGN SHALL BE PER SPECIFICATION SECTION 03310 – STRUCTURAL CONCRETE.

DEMOLITION NOTES

1. THE CONTRACTOR SHALL COORDINATE THE DEMOLITION OF THE ELECTRICAL CONDUIT, WIRE, EQUIPMENT AND DEVICES WITH THE GENERAL DEMOLITION AND SCHEDULE. THE DRAWINGS ARE INTENDED TO CONVEY THE GENERAL NATURE AND SCOPE OF THE DEMOLITION WORK. EVERY ITEM TO BE DEMOLISHED MAY NOT BE SHOWN. FIELD VERIFY WITH OWNER PRIOR TO BID, AND INCLUDE ALL DEMOLITION WORK IN THE CONTRACT PRICE.

2. PROVIDE TEMPORARY WIRE AND CONDUIT FOR THE EQUIPMENT WHICH MAY BE AFFECTED BY THE DEMOLITION BUT TO REMAIN IN SERVICE.

3. RELOCATE AND RECONNECT POWER AND CONTROL RACEWAYS AND CONDUCTORS TO EQUIPMENT AFFECTED BY DEMOLITION WORK.

4. ALL CONDUCTORS BEING DEMOLISHED SHALL BE DISCONNECTED AND REMOVED FROM THE LOAD TO THE SOURCE. SURFACE MOUNTED CONDUITS AND MOUNTING HARDWARE SHALL BE REMOVED. UNDERGROUND CONDUITS WHICH ARE NOT BEING REMOVED OR OTHERWISE NOT BEING MADE UNUSABLE SHALL BE CAPPED AND TAGGED AS SPARE, WITH INFORMATION CLEARLY INDICATING THE LOCATION OF THE OTHER END.

5. ALL SURFACES WHERE DEMOLISHED EQUIPMENT OR CONDUIT IS REMOVED SHALL BE CLEANED, PATCHED AND PAINTED TO MATCH THE SURROUNDING SURFACE.

6. THE CONTRACTOR SHALL BE RESPONSIBLE TO CHECK THE FUNCTION OF EACH CONDUCTOR BEFORE REMOVING OR DISCONNECTING.

7. IF A CONDUCTOR WHICH HAS TO STAY IN SERVICE (NOT BEING DEMOLISHED) IS INSTALLED IN A COMMON CONDUIT WITH CONDUCTORS WHICH ARE BEING DEMOLISHED, THE CONTRACTOR SHALL REMOVE ALL CONDUCTORS FROM THE CONDUIT, PROVIDE NEW CONDUCTORS WHICH ARE REPLACEMENTS FOR THE CONDUCTORS THAT ARE TO REMAIN IN SERVICE AND RE-INSTALL THE NEW CONDUCTORS. AFTER THE CONDUCTORS ARE PULLED, MEGGER OR HIPOT TEST EACH CONDUCTOR. CONNECT BOTH ENDS OF THE NEW CONDUCTORS AND TEST THE SYSTEM FOR PROPER FUNCTION. DO NOT RE-PULL USED CONDUCTORS.

8. WHERE EQUIPMENT IS BEING RE-FED FROM A NEW SOURCE, EXISTING CONDUIT MAY BE REUSED ONLY IF THE CONDUIT AND FITTINGS ARE OF THE TYPE SPECIFIED FOR NEW WORK ON THIS CONTRACT. IF NOT, THE CONDUIT AND CONDUCTORS SHALL BE REPLACED WITH NEW MATERIAL MEETING THE SPECIFICATIONS, AT NO ADDITIONAL COST TO THE OWNER.

9. THE CONTRACTOR SHALL COORDINATE WITH THE OWNER/ENGINEER TO FLAG EXISTING UNDERGROUND CONDUITS BEFORE DIGGING.

10. THE OWNER HAS THE RIGHT OF FIRST REFUSAL TO THE EQUIPMENT BEING REMOVED. THE CONTRACTOR SHALL DELIVER THE EQUIPMENT WHICH THE OWNER WISHES TO KEEP AT LOCATION DESIGNATED BY THE OWNER. SEE SPECIFICATIONS.

11. THE CONTRACTOR SHALL NOT MAKE ANY MODIFICATIONS TO THE EXISTING ELECTRICAL EQUIPMENT UNTIL THE FOLLOWING HAS BEEN DONE:

    A. THE OWNER/CONTRACTOR SHALL WITNESS AND RECORD THE CONDITION OF THE EXISTING EQUIPMENT, THE CONTRACTOR SHALL NOTE DOWN ANY DEFECTS OR DEFICIENCIES.

    B. THE OWNER SHALL OPERATE THE EQUIPMENT TO DEMONSTRATE THE CURRENT CONDITIONS. THE CONTRACTOR SHALL NOTE DOWN ANY DEFECTS OR DEFICIENCIES.

    C. A WRITTEN AND PHOTOGRAPHIC RECORD OF THE OPERATION AND EXISTING CONDITION SHALL BE KEPT IN A THREE RING BINDER AT THE OWNER/CONTRACTOR TRAILER, IN FORM OF PICTURES AND INFORMATION ON A FORM.

    D. A FORM SHALL BE GENERATED BY THE CONTRACTOR TO RECORD THE OBSERVATIONS. BOTH PARTIES SHALL SIGN ON THE FORM.

    E. THE CONTRACTOR SHALL BE RESPONSIBLE TO FURNISH AND INSTALL MATERIAL OR EQUIPMENT DAMAGED DURING THE COURSE OF HIS WORK.

    F. AFTER THE CHANGES ARE MADE, THE EQUIPMENT SHALL BE INSPECTED AND RE-TESTED TO DEMONSTRATE THAT IT FUNCTIONS CORRECTLY.

    G. NO PORTION OF EXISTING CONDUCTORS SHALL BE SPLICED TO NEW CONDUCTORS FOR RE-USE WITHOUT SPECIFIC APPROVAL FROM THE OWNER/ENGINEER ON A CASE-BY-CASE BASIS.

MCC, CONTROL PANELS, PANELBOARDS

THESE NOTES APPLY TO CONTROL PANELS, MCC ETC WHICH HAS TO BE REFURBISHED, MODIFIED, DISCONNECTED & RECONNECTED OR REWORKED. SEE SECTION 16060:

THE CONTRACTOR SHALL NOT MAKE ANY MODIFICATION UNTIL THE FOLLOWING HAS BEEN DONE:

A. THE OWNER/CONTRACTOR SHALL WITNESS THE CONDITION OF THE EXISTING EQUIPMENT, THE CONTRACTOR SHALL NOTE DOWN ANY DEFECTS OR DEFICIENCY.

B. THE OWNER SHALL OPERATE THE EQUIPMENT TO DEMONSTRATE THE CURRENT CONDITIONS. THE CONTRACTOR SHALL NOTE DOWN ANY DEFECTS OR DEFICIENCIES.

C. A RECORD OF THE OPERATION AND EXISTING CONDITION SHALL BE KEPT IN A THREE RING BINDER AT THE OWNER/CONTRACTOR TRAILER, IN FORM OF PICTURES AND INFORMATION ON A FORM.

D. A FORM SHALL BE GENERATED BY THE CONTRACTOR TO RECORD THE OBSERVATIONS. BOTH PARTIES SHALL SIGN ON THE FORM.

E. THE CONTRACTOR SHALL BE RESPONSIBLE TO FURNISH AND INSTALL MATERIAL IF DAMAGED BY HIM DURING HIS WORK.

F. AFTER THE CHANGES ARE MADE, THE EQUIPMENT SHALL BE INSPECTED AND RE-TESTED TO DEMONSTRATE THAT IT FUNCTIONS CORRECTLY.

DATE	REVISION	BY
04-22-13	ADDENDUM NO.1	LS

GAI
Gupta & Associates, Inc.
consulting engineering
Registration No. F-2593
7322 Southwest Freeway Suite 410
Houston, Texas 77074
Tel: 713-636-2936
Fax: 713-636-2987

STATE OF TEXAS
H. A. FOROUZAN
77748
REGISTERED PROFESSIONAL ENGINEER
03/15/2013

LJA Engineering Inc.
2929 Briarpark Drive
Suite 600
Houston, Texas 77042
Phone 713.953.5200
Fax 713.953.5026
FRN - F-1386

SURVEYED BY: AMANI ENG. | FB NO.: P-5679

CITY OF HOUSTON

DEPARTMENT OF PUBLIC WORKS AND ENGINEERING

ALMEDA SIMS WWTP & SPF IMPROVEMENTS PACKAGE-3

ELECTRICAL GENERAL NOTES

WBS NUMBER	
R-000298-0008-4	
DRAWING SCALE	
NTS	
CITY OF HOUSTON, PM	
IRAJ RANJBAR, P.E.	
SHEET NO. 57 OF 117	

50431

DWG: E-02

ORIGINAL SCALE IN INCHES

Z:\H814C_Houston Almeda Sims WWTP Improvement\Construction Phase\Addenda\Addendum No.1\E-02.dwg

POWER CABLES		
CABLE CODE	CONDUCTORS	MINIMUM CONDUIT SIZE
P212	2#12+#12G	3/4"
P312	3#12+#12G	3/4"
P412	4#12+#12G	3/4"
P210	2#10+#10G	3/4"
P310	3#10+#10G	3/4"
P410	4#10+#10G	3/4"
P208	2#8+#8G	3/4"
P308	3#8+#8G	1"
P408	4#8+#8G	1"
P206	2#6+#6G	1"
P306	3#6+#6G	1"
P406	4#6+#6G	1"
P204	2#4+#4G	1"
P304	3#4+#4G	1-1/4"
P404	4#4+#4G	1-1/4"
P203	2#3+#3G	1-1/4"
P303	3#3+#3G	1-1/4"
P403	4#3+#3G	1-1/4"
P202	2#2+#2G	1-1/4"
P302	3#2+#2G	1-1/4"
P402	4#2+#2G	1-1/4"
P201	2#1+#1G	1-1/2"
P301	3#1+#1G	1-1/2"
P401	4#1+#1G	1-1/2"
P21/0	2#1/0+#1/0G	1-1/2"
P31/0	3#1/0+#1/0G	2"
P41/0	4#1/0+#1/0G	2"
P22/0	2#2/0+#1/0G	1-1/2"
P32/0	3#2/0+#1/0G	2"
P42/0	4#2/0+#1/0G	2"
P23/0	2#3/0+#1/0G	2"
P33/0	3#3/0+#1/0G	2"
P43/0	4#3/0+#1/0G	2"
P24/0	2#4/0+#1/0G	2"
P34/0	3#4/0+#1/0G	2-1/2"
P44/0	4#4/0+#1/0G	2-1/2"
P2/250	2-250KCMIL+250G	2"
P3/250	3-250KCMIL+250G	2-1/2"
P4/250	4-250KCMIL+250G	2-1/2"
P2/350	2-350KCMIL+250G	2-1/2"
P3/350	3-350KCMIL+250G	3"
P4/350	4-350KCMIL+250G	3"
P2/500	2-500KCMIL+250G	4"
P3/500	3-500KCMIL+250G	4"
P4/500	4-500KCMIL+250G	4"

COMMUNICATION CABLES		
CABLE CODE	CABLES	MINIMUM CONDUIT SIZE
CAT5e	CAT5e CABLE	3/4"
CAT6	CAT6 CABLE	3/4"
6/F	6 FIBER CABLE	2"
12/F	12 FIBER CABLE	2"
12/P	12/C #20 PHONE	2"
48/P	48/C #20 PHONE	2"
RS232	25/C #20	1-1/2"
RS485	BELDEN 3107A EI485 CABLE	3/4"
2(P34/0)	2(3#4/0+4/0G)	2(2-1/2")
2(P44/0)	2(4#4/0+4/0G)	2(2-1/2")
2(P2/250)	2(2-250KCMIL+250G)	2(2")
2(P3/250)	2(3-250KCMIL+250G)	2(2-1/2")
2(P4/250)	2(4-250KCMIL+250G)	2(2-1/2")

POWER CABLES (CONTINUED)		
CABLE CODE	CONDUCTORS	MINIMUM CONDUIT SIZE
2(P3/350)	2(3-350KCMIL+350G)	2(3")
2(P4/350)	2(4-350KCMIL+350G)	2(3")
2(P3/500)	2(3-500KCMIL+500G)	2(4")
2(P4/500)	2(4-500KCMIL+500G)	2(4")
3(P34/0)	3(3#4/0+4/0G)	3(2-1/2")
3(P44/0)	3(4#4/0+4/0G)	3(2-1/2")
3(P3/250)	3(3-250KCMIL+250G)	3(2-1/2")
3(P4/250)	3(4-250KCMIL+250G)	3(2-1/2")
3(P3/350)	3(3-350KCMIL+350G)	3(3")
3(P4/350)	3(4-350KCMIL+350G)	3(3")
3(P3/500)	3(3-500KCMIL+500G)	3(4")
3(P4/500)	3(4-500KCMIL+500G)	3(4")
4(P34/0)	4(3#4/0+4/0G)	4(2-1/2")
4(P44/0)	4(4#4/0+4/0G)	4(2-1/2")
4(P3/250)	4(3-250KCMIL+250G)	4(2-1/2")
4(P4/250)	4(4-250KCMIL+250G)	4(2-1/2")
4(P3/350)	4(3-350KCMIL+350G)	4(3")
4(P4/350)	4(4-350KCMIL+350G)	4(3")
4(P3/500)	4(3-500KCMIL+500G)	4(4")
4(P4/500)	4(4-500KCMIL+500G)	4(4")
6(P3/500)	6(3-500KCMIL+500G)	6(4")
6(P4/500)	6(4-500KCMIL+500G)	6(4")
7(P3/500)	7(3-500KCMIL+500G)	7(4")
7(P4/500)	7(4-500KCMIL+500G)	7(4")
9(P3/500)	9(3-500KCMIL+500G)	9(4")
9(P4/500)	9(4-500KCMIL+500G)	9(4")
10(P3/500)	10(3-500KCMIL+500G)	10(4")
10(P4/500)	10(4-500KCMIL+500G)	10(4")
14(P3/500)	14(3-500KCMIL+500G)	14(4")
14(P4/500)	14(4-500KCMIL+500G)	14(4")

POWER TRAY CABLES		
CABLE CODE	CABLE ASSEMBLIES	MINIMUM CONDUIT SIZE
PT212	2#12+#12G	3/4"
~~PT312~~	~~3#12+#12G~~	~~3/4"~~
PT412	4#12+#12G	3/4"
PT210	2#10+#10G	3/4"
PT310	3#10+#10G	3/4"
PT410	4#10+#10G	1"
PT208	2#8+#8G	1"
PT308	3#8+#8G	1"
PT408	4#8+#10G	1"
PT206	2#6+#6G	1"
PT306	3#6+#6G	1-1/4"
PT406	4#6+#8G	1-1/4"
PT204	2#4+#4G	1-1/4"
PT304	3#4+#4G	1-1/4"
PT404	4#4+#8G	1-1/2"
PT202	2#2+#6G	1-1/2"
PT302	3#2+#6G	1-1/2"
PT402	4#2+#6G	1-1/2"
PT201	2#1+#1G	1-1/2"
PT301	3#1+#1G	2"
PT401	4#1+#6G	2"
2(PT212)	2(2#12+#12G)	1-1/4"
2(PT312)	2(3#12+#12G)	1-1/4"
2(PT412)	2(4#12+#12G)	1-1/2"
2(PT210)	2(2#10+#10G)	1-1/4"
2(PT310)	2(3#10+#10G)	1-1/2"
2(PT410)	2(4#10+#10G)	2"

POWER TRAY CABLES (CONTINUED)		
CABLE CODE	CABLE ASSEMBLIES	MINIMUM CONDUIT SIZE
2(PT208)	2(2#8+#8G)	2"
2(PT308)	2(3#8+#8G)	2"
2(PT408)	2(4#8+#10G)	2"
2(PT206)	2(2#6+#6G)	2"
2(PT306)	2(3#6+#6G)	2-1/2"
2(PT406)	2(4#6+#8G)	2-1/2"
2(PT204)	2(2#4+#6G)	2-1/2"
2(PT304)	2(3#4+#6G)	3"
2(PT404)	2(4#4+#8G)	3"
2(PT202)	2(2#2+#2G)	3"
2(PT302)	2(3#2+#2G)	3"
2(PT402)	2(4#2+#6G)	3"
2(PT201)	2(2#1+#1G)	3"
2(PT301)	2(3#1+#1G)	4"
2(PT401)	2(4#1+#6G)	4"
3(PT212)	3(2#12+#12G)	1-1/4"
3(PT312)	3(3#12+#12G)	1-1/2"
3(PT412)	3(4#12+#12G)	1-1/2"
3(PT210)	3(2#10+#10G)	1-1/2"
3(PT310)	3(3#10+#10G)	2"
3(PT410)	3(4#10+#10G)	2"
3(PT208)	3(2#8+#8G)	2"
3(PT308)	3(3#8+#8G)	2"
3(PT408)	3(4#8+#10G)	2-1/2"
3(PT206)	3(2#6+#6G)	2-1/2"
3(PT306)	3(3#6+#6G)	2-1/2"
3(PT406)	3(4#6+#8G)	2-1/2"
3(PT204)	3(2#4+#6G)	2-1/2"
3(PT304)	3(3#4+#6G)	3"
3(PT404)	3(4#4+#8G)	3"
3(PT202)	3(2#2+#2G)	3"
3(PT302)	3(3#2+#2G)	4"
3(PT402)	3(4#2+#6G)	4"
3(PT201)	3(2#1+#1G)	3"
3(PT301)	3(3#1+#1G)	4"
3(PT401)	3(4#1+#6G)	4"

SINGLE CONDUCTOR (CONTROL WIRES) (1)(3)		
CABLE CODE	CONDUCTORS	MINIMUM CONDUIT SIZE
C1	2(#14)+G	3/4"
C2	4(#14)+G	3/4"
C3	6(#14)+G	3/4"
C4	8(#14)+G	3/4"
C5	10(#14)+G	3/4"
C6	12(#14)+G	1"
C7	14(#14)+G	1"
C8	16(#14)+G	1"
C9	18(#14)+G	1"
C10	20(#14)+G	1-1/4"
C11	22(#14)+G	1-1/4"
C12	24(#14)+G	1-1/4"
C13	26(#14)+G	1-1/4"
C14	28(#14)+G	1-1/4"
C15	30(#14)+G	1-1/4"
C16	32(#14)+G	1-1/4"
C17	34(#14)+G	1-1/4"
C18	36(#14)+G	2-1/2"
C19	38(#14)+G	2-1/2"
C20	40(#14)+G	2-1/2"

SINGLE CONDUCTOR (CONTROL WIRES) (1)(3)		
CABLE CODE	CONDUCTORS	MINIMUM CONDUIT SIZE
C21	42(#14)+G	2-1/2"
C22	44(#14)+G	2-1/2"
C23	46(#14)+G	2-1/2"
C24	48(#14)+G	2"
C25	50(#14)+G	2"
C26	52(#14)+G	2"
C27	54(#14)+G	2"
C28	56(#14)+G	2"
C29	58(#14)+G	2"
C30	60(#14)+G	2"
C31	62(#14)+G	2"
C32	64(#14)+G	2"
C33	66(#14)+G	2"
C34	68(#14)+G	2"
C35	70(#14)+G	2"
C36	72(#14)+G	2"
C37	74(#14)+G	2"
C38	76(#14)+G	2"
C39	78(#14)+G	2"
C40	80(#14)+G	2"
C41	82(#14)+G	2-1/2"
C42	84(#14)+G	2-1/2"
C43	86(#14)+G	2-1/2"
C44	88(#14)+G	2-1/2"
C45	90(#14)+G	2-1/2"
C46	92(#14)+G	2-1/2"
C47	94(#14)+G	2-1/2"
C48	96(#14)+G	2-1/2"
C49	98(#14)+G	2-1/2"
C50	100(#14)+G	2-1/2"

INSTRUMENTATION CABLES (3)(4)		
CABLE CODE	CABLE ASSEMBLIES	MINIMUM CONDUIT SIZE
A1	1PR#16TS) TC	3/4"
A2	2(1PR#16TS) TC	1"
A3	3(1PR#16TS) TC	1"
A4	4(1PR#16TS) TC	1"
A5	5(1PR#16TS) TC	1-1/4"
A6	6(1PR#16TS) TC	1-1/4"
A7	7(1PR#16TS) TC	1-1/4"
A8	8(1PR#16TS) TC	1-1/2"
A9	9(1PR#16TS) TC	1-1/2"
A10	10(1PR#16TS) TC	2"
A11	11(1PR#16TS) TC	2"
A12	12(1PR#16TS) TC	2"
A13	13(1PR#16TS) TC	2"
A14	14(1PR#16TS) TC	2"
A15	15(1PR#16TS) TC	2"
A16	16(1PR#16TS) TC	2"
A17	17(1PR#16TS) TC	2-1/2"
A18	18(1PR#16TS) TC	2-1/2"
A19	19(1PR#16TS) TC	2-1/2"
A20	20(1PR#16TS) TC	2-1/2"
A21	21(1PR#16TS) TC	2-1/2"
A22	22(1PR#16TS) TC	2-1/2"
A23	23(1PR#16TS) TC	2-1/2"
A24	24(1PR#16TS) TC	3"
A25	25(1PR#16TS) TC	3"

INSTRUMENTATION CABLES (3)(4)		
TWISTED SHIELDED TRIADS		
AT1	1TRIAD#16TS TC	3/4"
AT2	2(1TRIAD#16TS) TC	1"
AT3	3(1TRIAD#16TS) TC	1"
AT4	4(1TRIAD#16TS) TC	1-1/4"
AT5	5(1TRIAD#16TS) TC	1-1/4"
AT6	6(1TRIAD#16TS) TC	1-1/4"
AT9	9(1TRIAD#16TS) TC	1-1/2"
AT12	12(1TRIAD#16TS) TC	2"
AT16	16(1TRIAD#16TS) TC	2-1/2"

MULTI CONDUCTOR CONTROL TRAY CABLES		
CABLE CODE	CABLE ASSEMBLIES	MINIMUM CONDUIT SIZE
CT3	3/C#14	3/4"
CT4	4/C#14	3/4"
CT5	5/C#14	3/4"
CT7	7/C#14	3/4"
CT9	9/C#14	1"
CT12	12/C#14	1"
CT15	15/C#14	1"
CT19	19/C#14	1-1/4"
CT25	25/C#14	1-1/4"
CT37	37/C#14	1-1/2"
2(CT3)	2(3/C#14)	1-1/4"
2(CT4)	2(4/C#14)	1-1/4"
2(CT5)	2(5/C#14)	1-1/4"
2(CT7)	2(7/C#14)	1-1/2"
2(CT9)	2(9/C#14)	2"
2(CT12)	2(12/C#14)	2"
2(CT15)	2(15/C#14)	2"
2(CT19)	2(19/C#14)	2-1/2"
2(CT25)	2(25/C#14)	2-1/2"
2(CT37)	2(37/C#14)	3"
3(CT3)	3(3/C#14)	1-1/4"
3(CT4)	3(4/C#14)	1-1/4"
3(CT5)	3(5/C#14)	1-1/2"
3(CT7)	3(7/C#14)	1-1/2"
3(CT9)	3(9/C#14)	2"
3(CT12)	3(12/C#14)	2"
3(CT15)	3(15/C#14)	2"
3(CT19)	3(19/C#14)	2-1/2"
3(CT25)	3(25/C#14)	2-1/2"
3(CT37)	3(37/C#14)	4"
4(CT3)	4(3/C#14)	1-1/2"
4(CT4)	4(4/C#14)	1-1/2"
4(CT5)	4(5/C#14)	2"
4(CT7)	4(7/C#14)	2"
4(CT9)	4(9/C#14)	2-1/2"
4(CT12)	4(12/C#14)	2-1/2"
4(CT15)	4(15/C#14)	2-1/2"
4(CT19)	4(19/C#14)	3"
4(CT25)	4(25/C#14)	3"
4(CT37)	4(37/C#14)	4"

NOTES:

(1) THE GROUND WIRE SHALL BE SAME AS THE PHASE WIRE SIZE.

(2) THE CONDUIT SIZES AS SHOWN ARE MINIMUM. IF THE WIRES ARE INSTALLED UNDERGROUND, THE CONDUIT SIZE SHALL BE AS SHOWN ON THE INTERFACE OR DIAGRAMS. CONDUIT IN UNDERGROUND DUCTBANKS SHALL BE 2" MINIMUM. TYPICAL FOR ALL TABLES SHOWN ON THIS SHEET.

(3) NOT ALL POSSIBLE COMBINATIONS ARE LISTED. INCLUDE A SEPARATE GROUND WIRE IN EACH CONDUIT RUN.

C# — # REPRESENTS PAIR OF WIRE
EXAMPLE C10 = 20#14 WIRES + G
EXAMPLE C20 = 40#14 WIRES + G

C = CONTROL
A = ANALOG (INSTRUMENTATION) TWISTED SHIELDED PAIR – TRAY RATED

(4) THE TWISTED SHIELD WIRE SHALL BE INDIVIDUAL PAIR. MULTICONDUCTOR CABLE CAN BE USED WHERE ALL INSTRUMENTS ARE LOCATED WITHIN 2' OF EACH OTHER AND THE PEEL BACK IS LESS THAN 3' LONG.

DATE	REVISION	BY

GAI
Gupta & Associates, Inc.
consulting engineering
Registration No. F-2593
7322 Southwest Freeway Suite 410
Houston, Texas 77074
Tel: 713-636-2936
Fax: 713-636-2937
email:hforouzan@gaiconsulting.com

STATE OF TEXAS
H. A. FOROUZAN
77748
REGISTERED PROFESSIONAL ENGINEER
03/15/2013

LJA Engineering Inc.
2929 Briarpark Drive
Suite 600
Houston, Texas 77042
Phone 713.953.520
Fax 713.953.502
FRN - F-138

SURVEYED BY: AMANI ENG. | FB NO.: P-5679

CITY OF HOUSTON
DEPARTMENT OF PUBLIC WORKS AND ENGINEERING

ALMEDA SIMS WWTP & SP IMPROVEMENTS PACKAGE–

ELECTRICAL
CABLE CODES

WBS NUMBER
R-000298-0008-4
DRAWING SCALE
NTS
CITY OF HOUSTON, PM
IRAJ RANJBAR, P.E.
SHEET NO. 58 OF 117

PUBLIC WORKS & ENGINEERING
50431
HOUSTON, TEXAS

DWG: E-03

Z:\H814_Houston Almeda Sims WWTP Improvement\Drawings\Electrical\Working\E-03.dwg

ORIGINAL SCALE IN INCHES

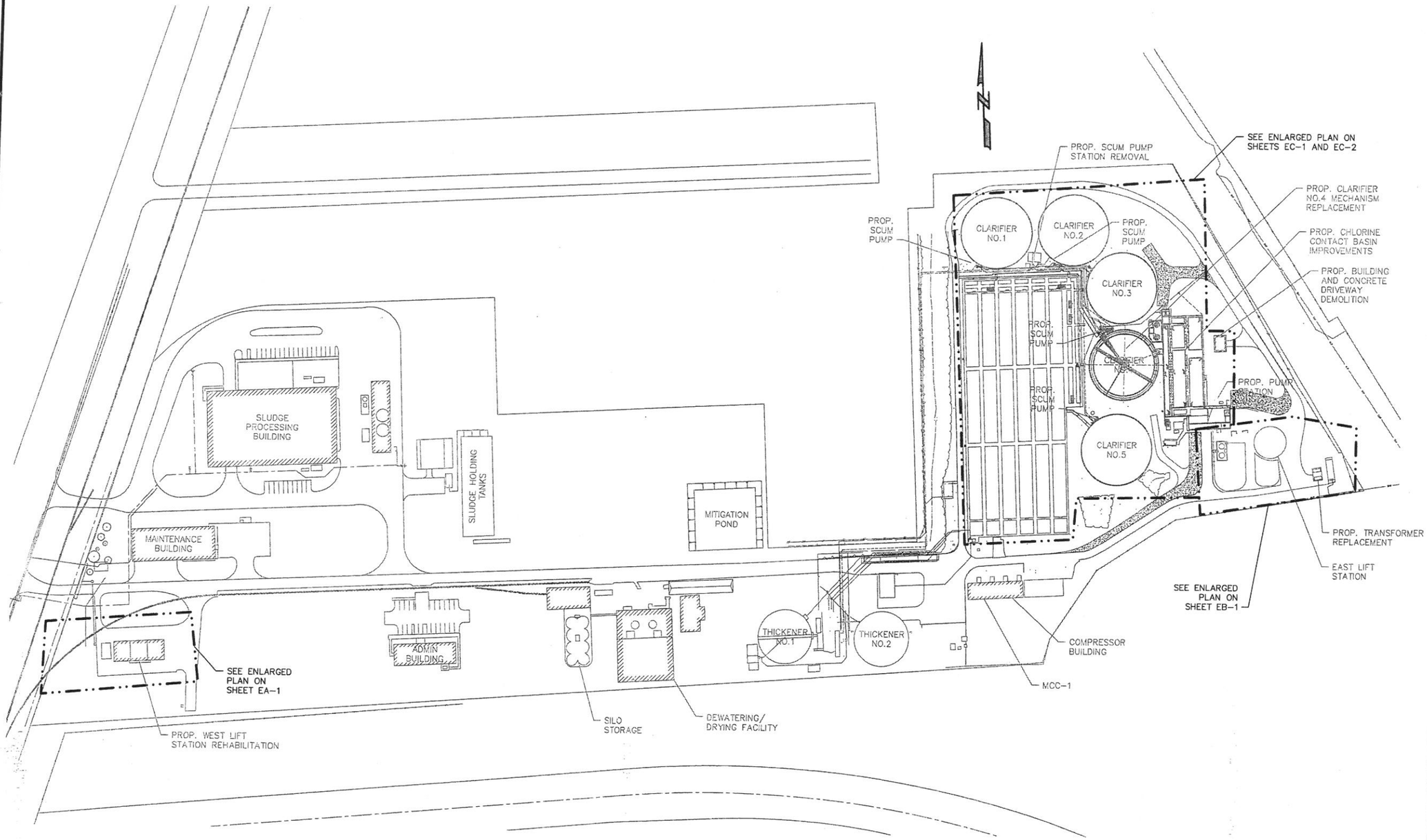

OVERALL SITE
PLAN
1" = 100'

DATE	REVISION	BY

GAI
Gupta & Associates, Inc.
consulting engineering
Registration No. F-2593
7322 Southwest Freeway, Suite 410
Houston, Texas 77074
Tel: 713-636-2936
Fax: 713-636-2987
email:hforouzan@gaiconsulting.com

03/15/2013

STATE OF TEXAS
H. A. FOROUZAN
77748
REGISTERED PROFESSIONAL ENGINEER

LJA Engineering Inc.
2929 Briarpark Drive
Suite 600
Houston, Texas 77042
Phone 713.953.5200
Fax 713.953.5026
FRN - F-1386

SURVEYED BY: AMANI ENG. | FB NO.: P-5679

CITY OF HOUSTON
DEPARTMENT OF PUBLIC WORKS AND ENGINEERING

ALMEDA SIMS WWTP & SPF IMPROVEMENTS PACKAGE-3

ELECTRICAL OVERALL SITE PLAN

WBS NUMBER	R-000298-0008-4
DRAWING SCALE	1" = 100'
CITY OF HOUSTON, PM	IRAJ RANJBAR, P.E.
SHEET NO.	59 OF 117

DWG: E-04

PROFESSIONAL ENGINEER 50481 HOUSTON, TEXAS

Z:\H814_Houston Almeda Sims WWTP Improvement\Drawings\Electrical\Working\E-04.dwg

NOTES:

1. REPLACE THE EXISTING FLUORESCENT LIGHT FIXTURES WITH NEW LED LIGHTS IN ALL FIVE FLOORS. AS SHOWN ON SHEET EA-04 AND EA-05
2. APPROXIMATE LOCATION
3. REFER TO SHEET EA-2 FOR ONE-LINE DIAGRAM.

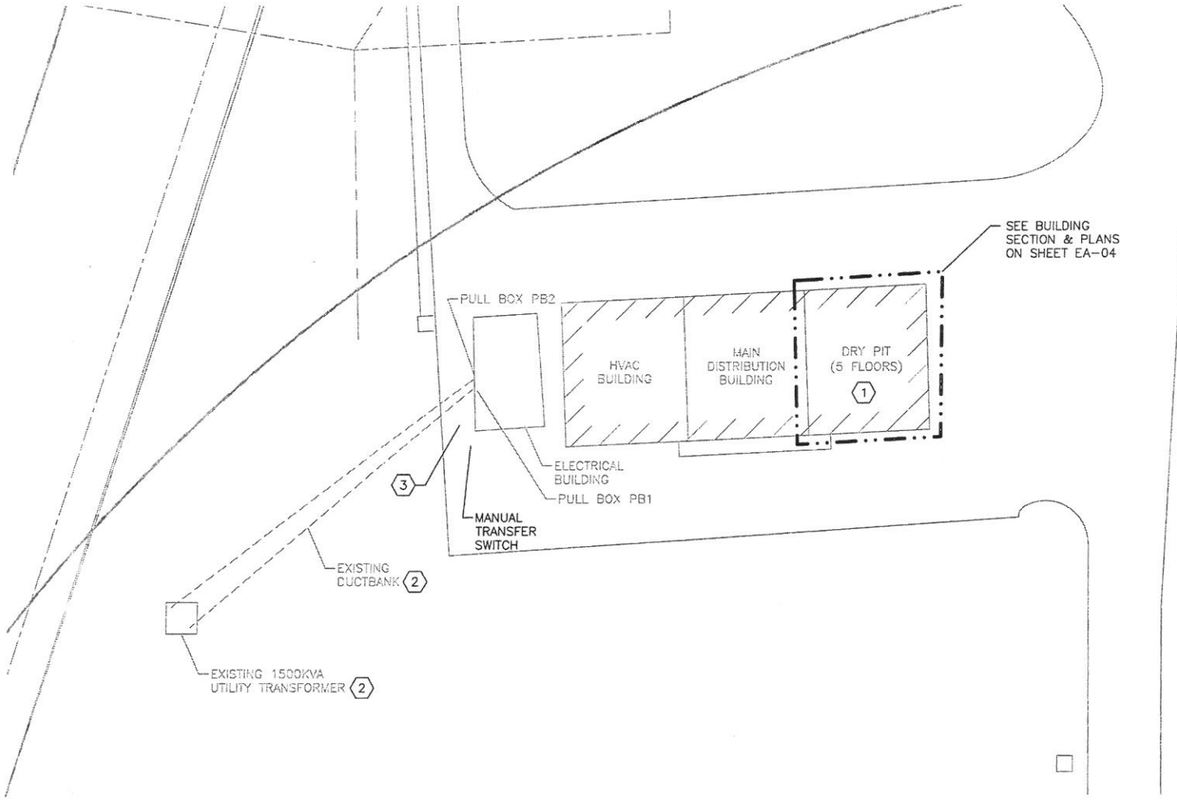

WEST LIFT STATION PARTIAL SITE PLAN
1" = 20'

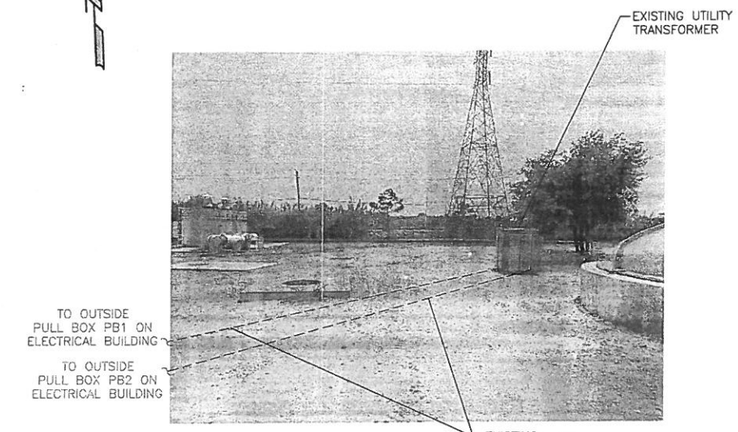

UTILITY TRANSFORMER AND MANHOLE
PHOTOGRAPH A

DATE	REVISION	B

GAI
Gupta & Associates, Inc.
consulting engineering
Registration No. F-2593
7322 Southwest Freeway Suite 410
Houston, Texas 77074
Tel: 713-636-2936
Fax: 713-636-2987
email hforouzan@gaiconsulting.com

STATE OF TEXAS
H. A. FOROUZAN
77748
REGISTERED PROFESSIONAL ENGINEER
03/15/2013

LJA Engineering Inc.
2929 Briarpark Drive
Suite 600
Houston, Texas 77042
Phone 713.953.520
Fax 713.953.502
FRN - F-138

SURVEYED BY: AMANI ENG. | FB NO.: P-5679

CITY OF HOUSTON
DEPARTMENT OF PUBLIC WORKS AND ENGINEERING

ALMEDA SIMS WWTP & SP IMPROVEMENTS PACKAGE-

ELECTRICAL
WEST LIFT STATION PARTIAL SITE PLAN

WBS NUMBER
R-000298-0008-4
DRAWING SCALE
1" = 20'
CITY OF HOUSTON, PM
IRAJ RANJBAR, P.E.
SHEET NO. 60 OF 117

DWG: EA-01

Z:\H814_Houston Almeda Sims WWTP Improvement\Drawings\Electrical\Working\EA-01.dwg

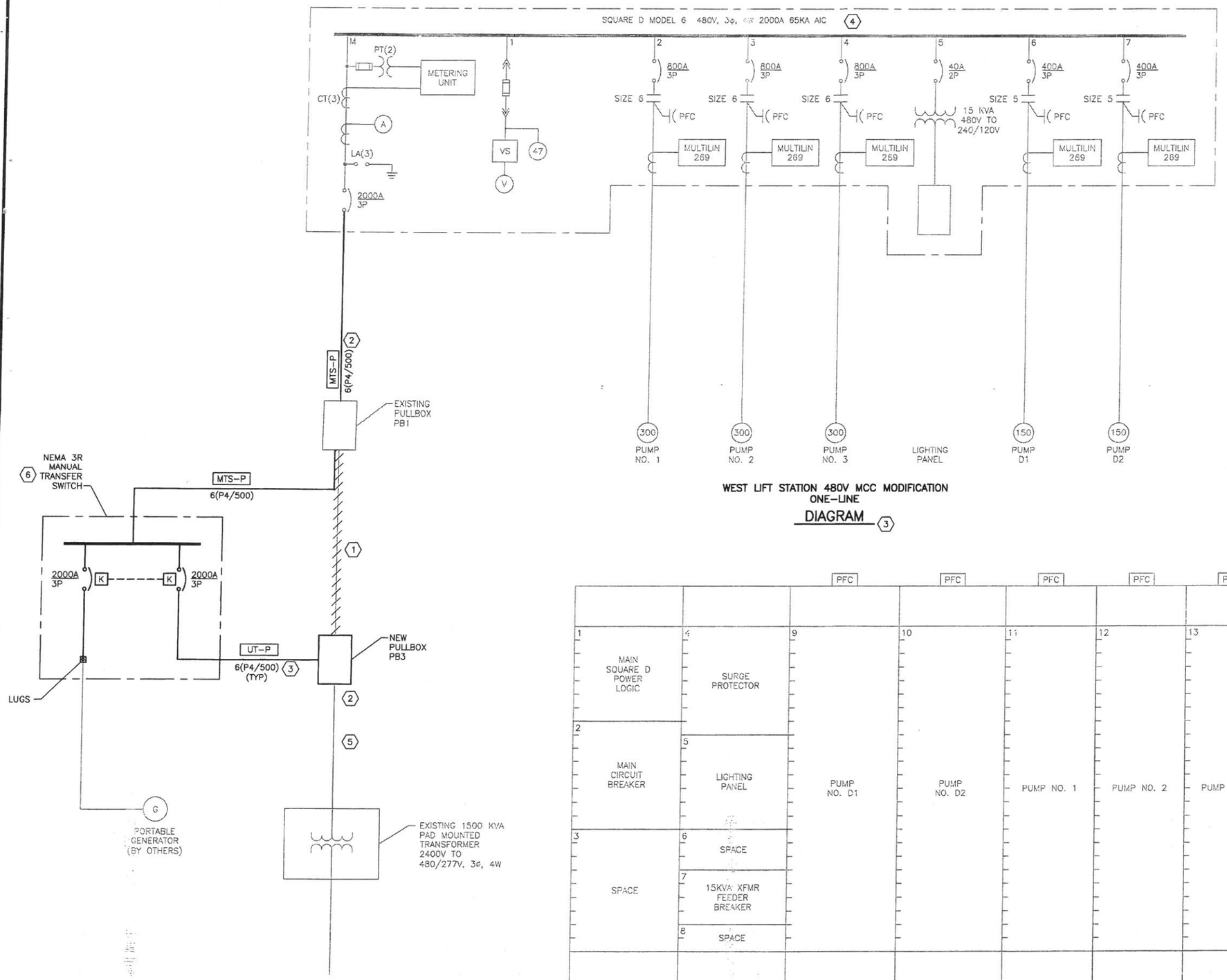

WEST LIFT STATION 480V MCC MODIFICATION
ONE-LINE
DIAGRAM 3

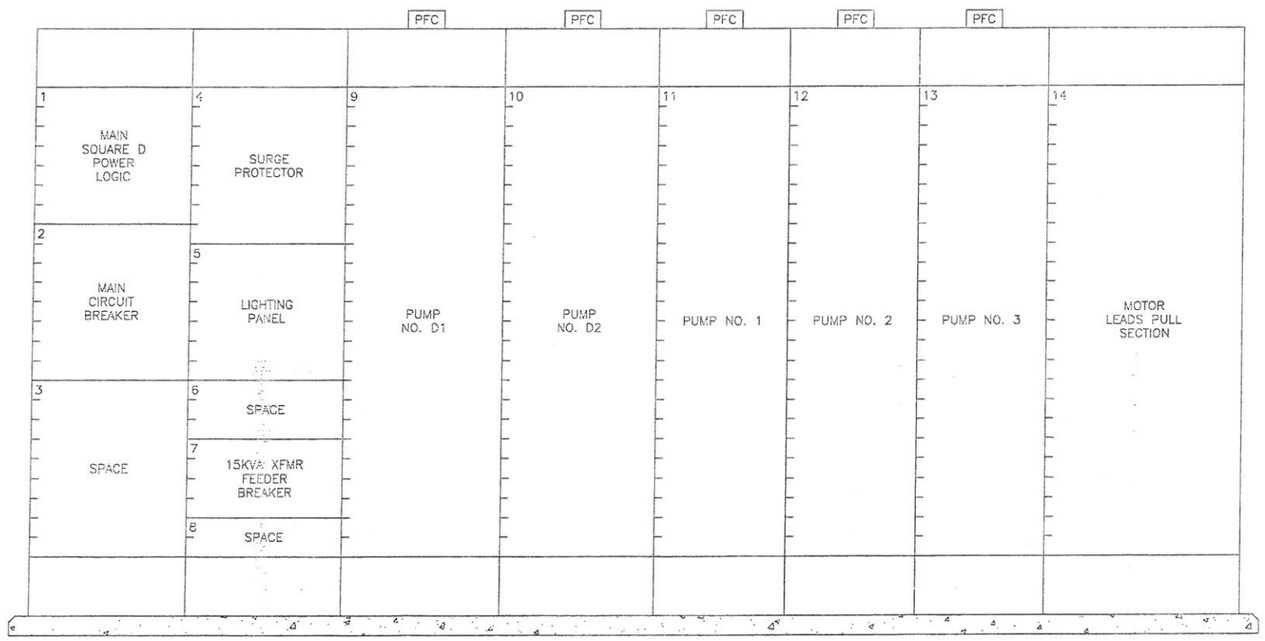

WEST LIFT STATION
480V MCC
ELEVATION

NOTES:

1. DEMOLISH A PORTION OF THE CONDUIT STARTIN FROM THE NEW PULL BOX PB3 TO THE EXISTIN PULL BOX PB1. REFER TO SHEET EA-03.
2. RE-USE THE EXISTING CONDUIT AS MUCH AS POSSIBLE.
3. REFER TO SHEET E-03 FOR ELECTRICAL CABLE CODES.
4. EXISTING 480V MCC TO REMAIN.
5. THIS PORTION OF THE SERVICE ENTRANCE CONDUCTORS IS LOCATED MOSTLY IN DUCTBANK AS SHOWN ON SHEET EA-03.
6. THE MANUAL TRANSFER SWITCH SHALL BE RATE AT 65KAIC AND SHALL HAVE TIN PLATED COPPE BUS.

DATE	REVISION	BY

GAI
Gupta & Associates, Inc.
consulting engineering
Registration No. F-2593
7322 Southwest Freeway Suite 410
Houston, Texas 77074
Tel: 713-636-2936
Fax: 713-636-2987
email: hforouzan@gaiconsulting.com

03/15/2013

STATE OF TEXAS
H. A. FOROUZAN
77748
REGISTERED PROFESSIONAL ENGINEER

LJA Engineering Inc.
2929 Briarpark Drive
Suite 600
Houston, Texas 77042
Phone 713.953.5200
Fax 713.953.5026
FRN - F-1386

SURVEYED BY: AMANI ENG. | FB NO.: P-5679

CITY OF HOUSTON
DEPARTMENT OF PUBLIC WORKS AND ENGINEERING

ALMEDA SIMS WWTP & SPI
IMPROVEMENTS PACKAGE-3
ELECTRICAL
WEST LIFT STATION 480V MCC
MODIFIED ONE-LINE DIAGRAM
AND ELEVATION

WBS NUMBER	R-000298-0008-4
DRAWING SCALE	NTS
CITY OF HOUSTON, PM	IRAJ RANJBAR, P.E.
SHEET NO.	61 OF 117

DWG: EA-02

Z:\H814_Houston Almeda Sims WWTP Improvement\Drawings\Electrical\Working\EA-02.dwg

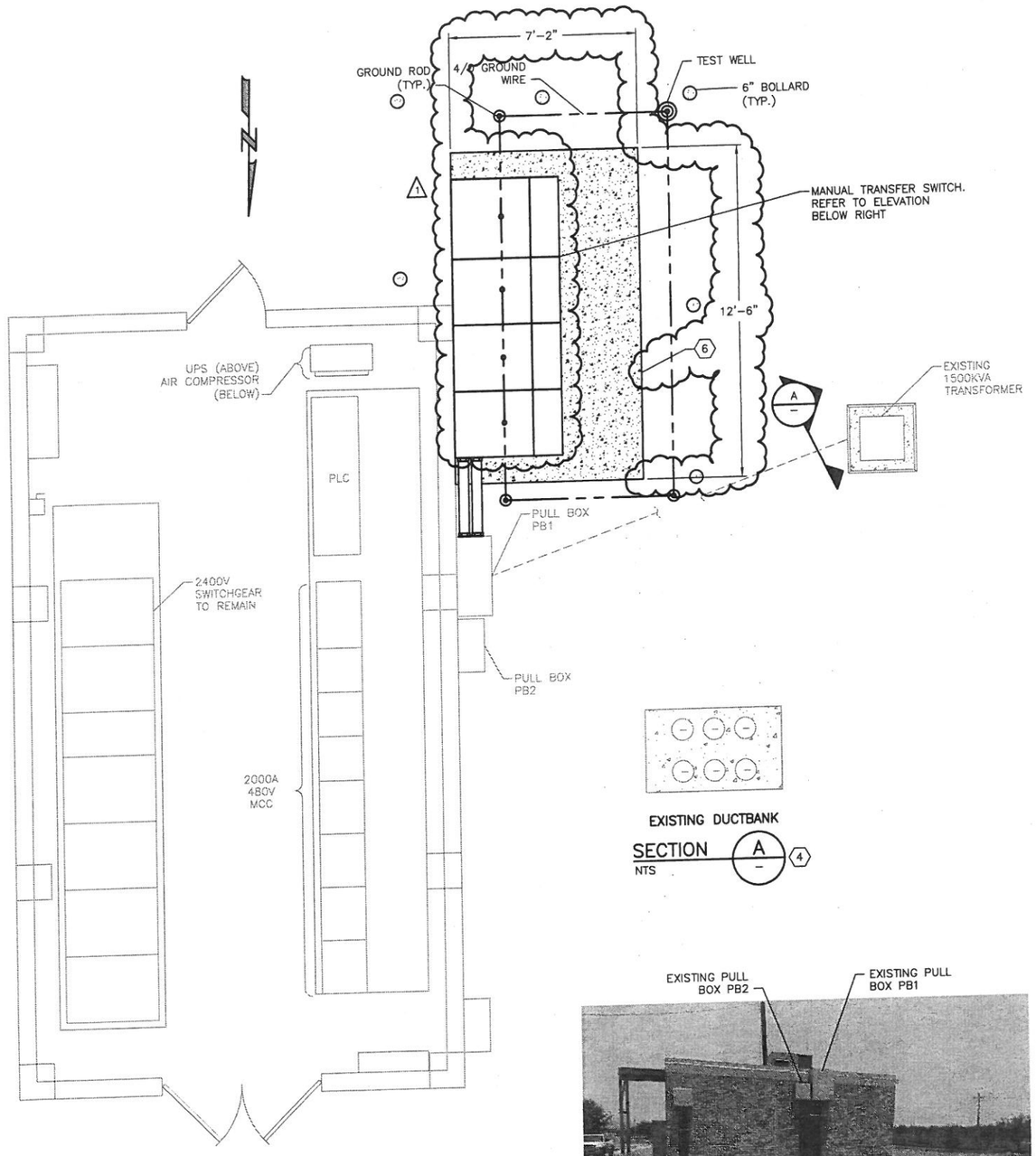

WEST LIFT STATION ELECTRICAL ROOM

PLAN (5)

3/8" = 1'-0"

EXISTING DUCTBANK

SECTION A (4)

NTS

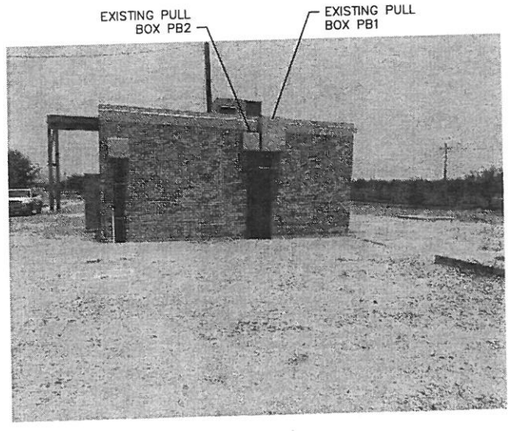

OUTSIDE ELECTRICAL BUILDING

PHOTOGRAPH A

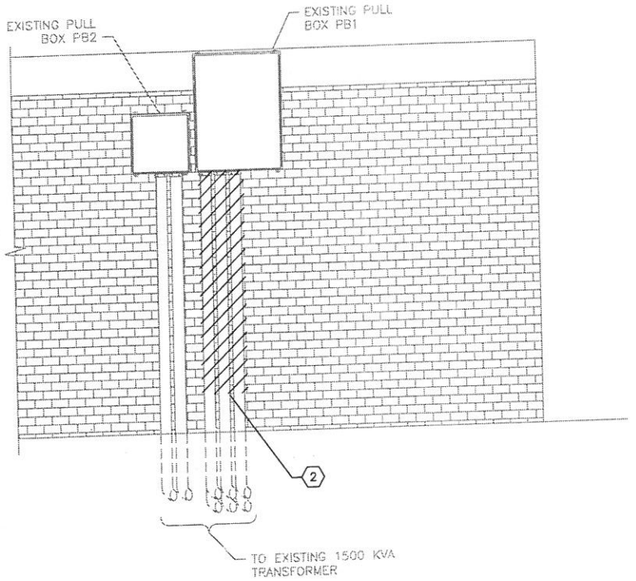

OUTSIDE ELECTRICAL BUILDING CONDUIT DEMOLITION

ELEVATION

3/8" = 1'-0"

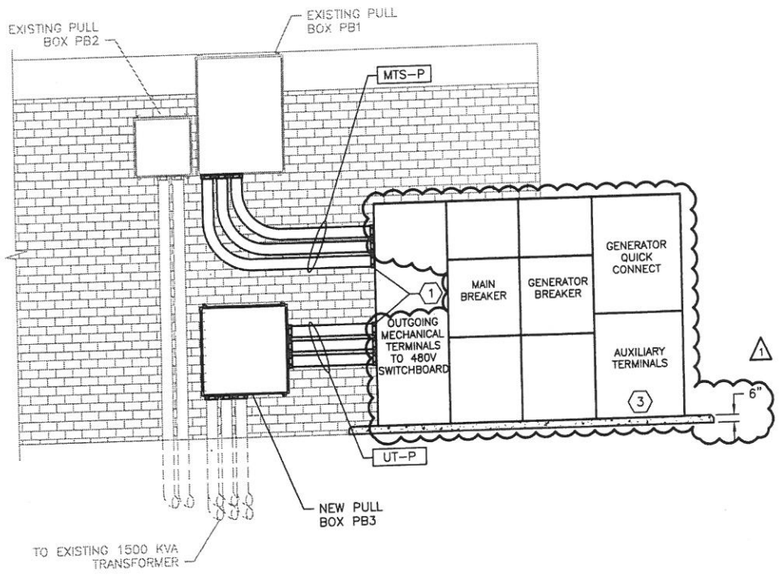

MANUAL TRANSFER SWITCH ADDITION

ELEVATION

3/8" = 1'-0"

NOTES:

1. REFER TO ONE-LINE DIAGRAM ON SHEET EA-2 FOR ADDITIONAL INFORMATION ON WIRE, CONDUIT SIZES, AND CONDUIT LABELS.
2. CUT AND REMOVE EXISTING CONDUITS WHERE SHOWN.
3. THE PORTABLE GENERATOR, PROVIDED BY OTHERS, SHALL BE CONNECTED TO THE MECHANICAL LUGS LOCATED BEHIND THE DOOR OF THIS SECTION OF THE MANUAL TRANSFER SWITCH.
4. EXISTING DUCTBANK SECTION SHOWN FOR INFORMATION ONLY.
5. CONTRACTOR SHALL FIELD VERIFY THE PRESENCE OF OTHER DUCTBANKS IN THIS AREA.
6. REFER TO SLAB DETAIL "A" ON SHEET 46.

1

DATE	REVISION	BY
04-22-13	ADDENDUM NO.1	LS

GAI
Gupta & Associates, Inc.
consulting engineering
Registration No. F-2593
7322 Southwest Freeway Suite 410
Houston, Texas 77074
Tel: 713-636-7976
Fax: 713-636-7987
email:hforouzan@gai-consulting.com

STATE OF TEXAS
H. A. FOROUZAN
77748
REGISTERED PROFESSIONAL ENGINEER
03/15/2013

LJA Engineering Inc.
2929 Briarpark Drive
Suite 600
Houston, Texas 77042
Phone 713.953.5200
Fax 713.953.5026
FRN - F-1386

SURVEYED BY: AMANI ENG. | FB NO.: P-5679

CITY OF HOUSTON

DEPARTMENT OF PUBLIC WORKS AND ENGINEERING

ALMEDA SIMS WWTP & SPI IMPROVEMENTS PACKAGE-

ELECTRICAL

WEST LIFT STATION ELECTRICAL ROOM PLAN AND ELEVATIONS

WBS NUMBER	R-000298-0008-4
DRAWING SCALE	3/8"=1'-0"
CITY OF HOUSTON, PM	IRAJ RANJBAR, P.E.
SHEET NO.	62 OF 117

DWG: EA-03

ADDENDUM NO.1

Z:\V814C_Houston Almeda Sims WWTP Improvement\Construction Phase\Addenda\Addendum No.1\EA-03.dwg

ORIGINAL SCALE IN INCHES

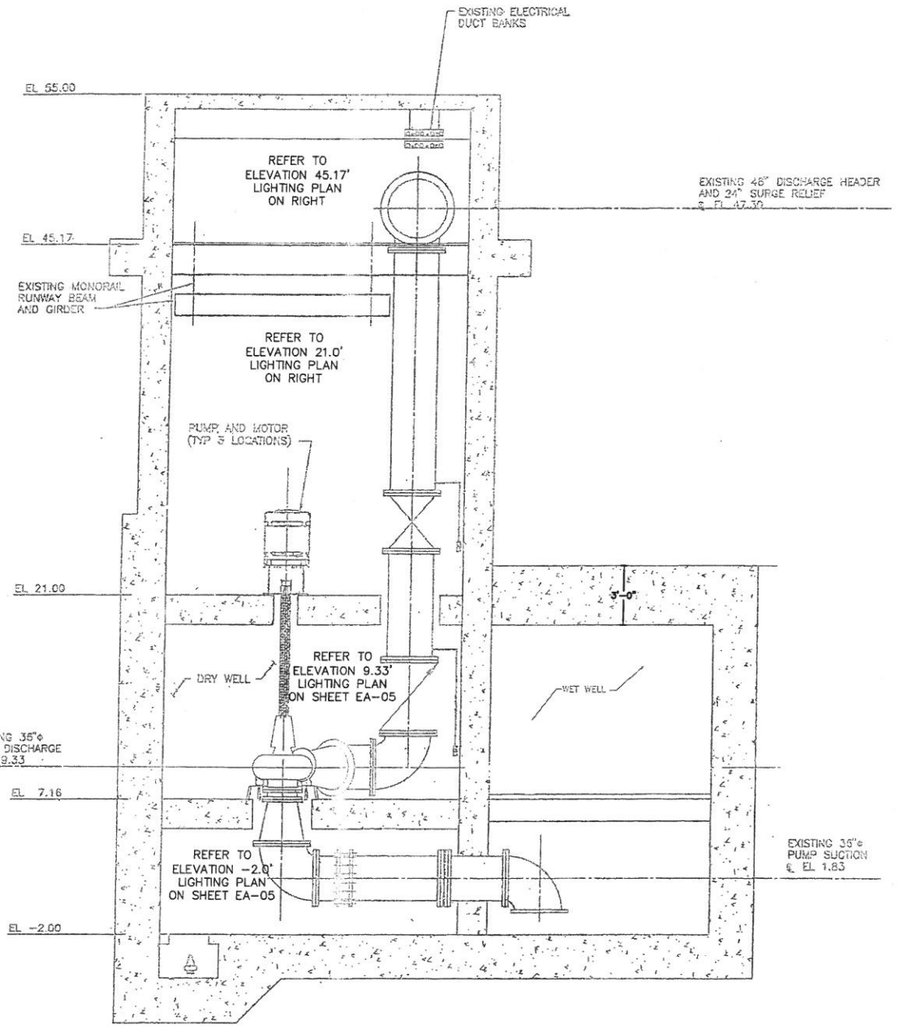

WEST LIFT STATION
DRY WELL

SECTION 1
3/16"=1'-0"

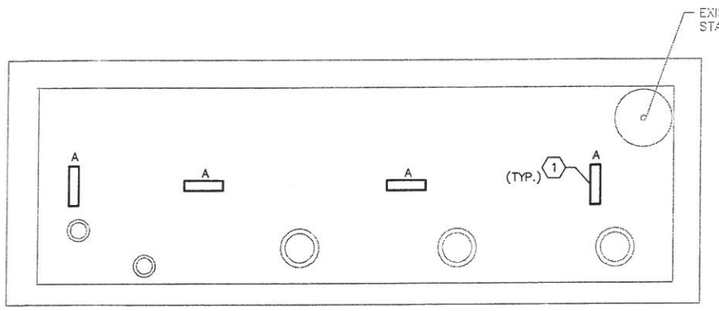

WEST LIFT STATION DRY WELL
ELEVATION 45.17'
LIGHTING FLOOR

PLAN 4
1/8" = 1'-0"

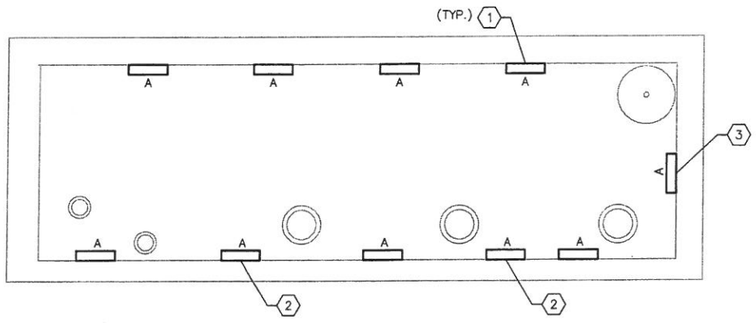

WEST LIFT STATION DRY WELL
ELEVATION 21.0'
LIGHTING FLOOR

PLAN 4
1/8" = 1'-0"

NOTES:

1. REPLACE EXISTING LIGHT FIXTURE WITH A TYPE "A" FIXTURE AS DEFINED IN THE LIGHT FIXTURE SCHEDULE BELOW AND RECONNECT TO EXISTING CIRCUIT(S).
2. REPLACE THE EXISTING LIGHT FIXTURE THAT HAS SINGLE KEYLESS LAMP SOCKET WITH TYPE "A" FIXTURE AS SCHEDULED BELOW AND RECONNECT TO EXISTING CIRCUIT.
3. REPLACE THE TWO EXISTING LIGHTS CONTAINING A SINGLE KEYLESS LAMP SOCKET WITH ONE 4FT TYPE "A" FIXTURE.
4. CONTRACTOR SHALL FIELD VERIFY THE COUNT OF THE EXISTING FIXTURES TO BE REPLACED AS IT WAS DETERMINED BASED ON RANDOM OBSERVATIONS.

LIGHTING FIXTURE SCHEDULE

TYPE	DESCRIPTION	MANUFACTURER	MOUNTING HEIGHT
A	1' X 4' GASKETED LUMINAIRE SUITABLE FOR WET AND COLD LOCATIONS, WITH FIBERGLASS HOUSING, CLEAR ACRYLIC LENS, AND STAINLESS STEEL LATCHES. LUMINAIRE SHALL INCLUDE A HIGH EFFICIENCY DRIVER AND INTEGRAL SURGE PROTECTION.	LITHONIA LIGHTING: FEM4LED-GL-35-IMACD	SAME HEIGHT AS EXISTING
B	60 LED LIGHT FIXTURE CONTROLLED BY A PHOTOCELL AND MOUNTED ON A 10FT HIGH ALUMINUM STRAIGHT ROUND PIVOT WITH 1-1/2" DIAMETER AND ALL NECESSARY HARDWARE BETWEEN THE LIGHT AND THE POLE	KIM LIGHTING: CAT#1SA-SAR-3/60L5K-120V-VSF-1SA/DB-PBT PIVOT POLE: CAT#ST10RA	MOUNT AT 10FT. ABOVE WALKWAY
C	PROVIDE A WALL MOUNTED LIGHT FIXTURE WITH POLYCARBONATE HOUSING INCORPORATING A 42W COMPACT FLUORESCENT LAMP, AN ELECTRONIC BALLAST, AN EMERGENCY BATTERY PACK AND A PHOTOCELL (120V)	HUBBELL: TRPC-42F8-BZ-BOC	MOUNT AT 7'-6"FT. ABOVE GRADE
X	LED EXIT LIGHT WITH RED LETTERS, CAST ALUMINUM FACE PLATE RATED WITH NiCAD BATTERY FOR DAMP LOCATION (120V)	SURE-LITES: CAR-7-1-70-00-R-W-SD	MOUNT AT 7'-6"FT. AFF

DATE	REVISION	BY

GAI
Gupta & Associates, Inc.
consulting engineering
Registration No. F-2593
7322 Southwest Freeway Suite 410
Houston, Texas 77074
Tel: 713-636-2936
Fax: 713-636-2987
email: hforouzan@gaiconsulting.com

03/15/2013
STATE OF TEXAS
H. A. FOROUZAN
77748
REGISTERED PROFESSIONAL ENGINEER

LJA Engineering Inc.
2929 Briarpark Drive
Suite 600
Houston, Texas 77042
Phone 713.953.520
Fax 713.953.502
FRN - F-1386

SURVEYED BY: AMANI ENG. | FB NO.: P-5679

CITY OF HOUSTON
DEPARTMENT OF PUBLIC WORKS AND ENGINEERING

ALMEDA SIMS WWTP & SPI
IMPROVEMENTS PACKAGE-3

ELECTRICAL
WEST LIFT STATION
DRY WELL LIGHTING - I

WBS NUMBER	R-000298-0008-4
DRAWING SCALE	NTS
CITY OF HOUSTON, PM	IRAJ RANJBAR, P.E.
SHEET NO. 63 OF 117	

PROFESSIONAL ENGINEER 50431 IRAJ RANJBAR HOUSTON, TEXAS

DWG: EA-04

Z:\N814_Houston Almeda Sims WWTP Improvement\Drawings\Electrical\Working\EA-04.dwg

NOTES:

1. REFER TO LIGHT FIXTURE SCHEDULE ON SHEET EA-04.
2. REPLACE EXISTING LIGHT FIXTURE WITH TYPE "A" AS SHOWN ON THE LIGHT FIXTURE SCHEDULE ON SHEET EA-04.
3. CONTRACTOR SHALL FIELD VERIFY THE COUNT OF THE EXISTING FIXTURES TO BE REPLACED AS IT WAS DETERMINED BASED ON RANDOM OBSERVATIONS.

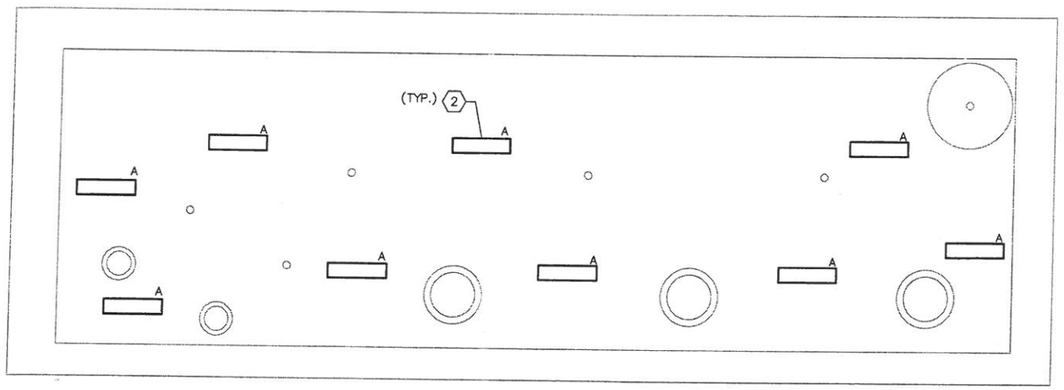

WEST LIFT STATION DRY WELL
ELEVATION 7.16'
LIGHTING FLOOR
PLAN
3/16" = 1'-0" 1 3

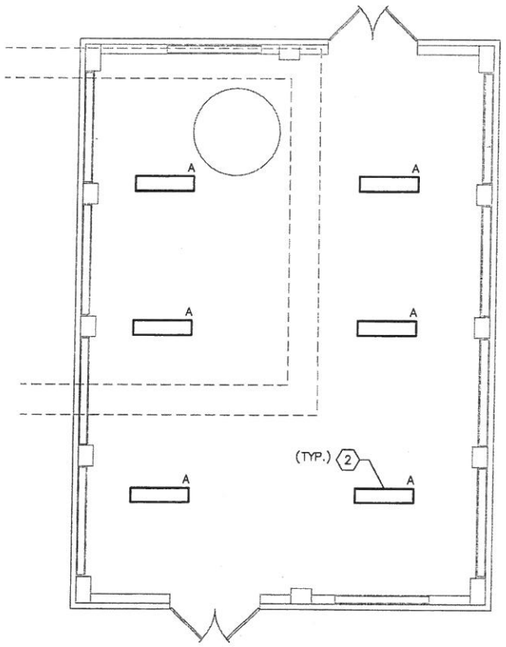

WEST LIFT STATION
FAN ROOM NO.2
LIGHTING
PLAN
3/16" = 1'-0" 1 3

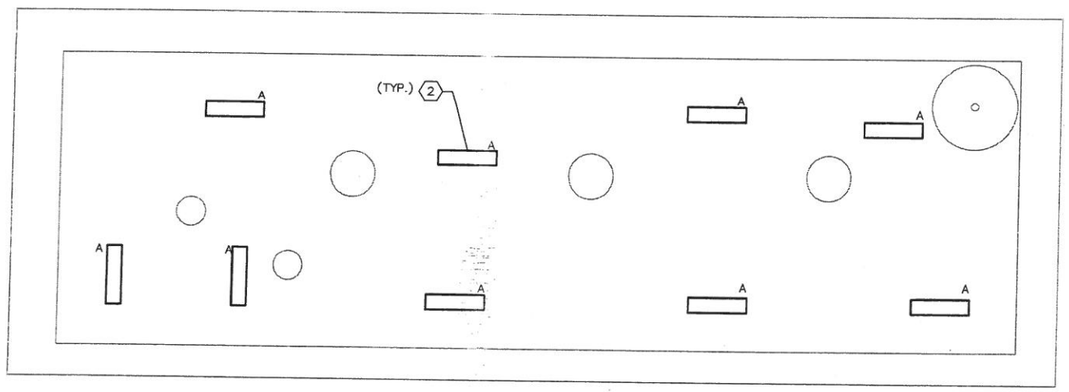

WEST LIFT STATION DRY WELL
ELEVATION -2.0'
LIGHTING FLOOR
PLAN
3/16" = 1'-0" 1 3

DATE	REVISION

GAI
Gupta & Associates, Inc.
consulting engineering
Registration No. F-2593
7322 Southwest Freeway Suite 410
Houston, Texas 77074
Tel: 713-636-2936
Fax: 713-636-2987
email:hforouzan@gaiconsulting.com

03/15/2013
STATE OF TEXAS
H. A. FOROUZAN
77746
REGISTERED PROFESSIONAL ENGINEER

LJA Engineering Inc.
2929 Briarpark Drive
Suite 600
Houston, Texas 77042
Phone 713.953.5
Fax 713.953.5
FRN - F-13

SURVEYED BY: AMANI ENG. | FB NO.: P-5679

CITY OF HOUSTON
DEPARTMENT OF PUBLIC WORKS AND ENGINEERING

ALMEDA SIMS WWTP & SF
IMPROVEMENTS PACKAGE-

ELECTRICAL
WEST LIFT STATION
DRY WELL LIGHTING - II

WBS NUMBER	
R-000298-0008-4	
DRAWING SCALE	
NTS	
CITY OF HOUSTON, PM	
IRAJ RANJBAR, P.E.	
SHEET NO. 64 OF 117	

80431
LICENSED
PROFESSIONAL
ENGINEER
HOUSTON, TEXAS

DWG: EA-05

Z:\1814_Houston Almeda Sims WWTP Improvement\Drawings\Electrical\Working\EA-05.dwg

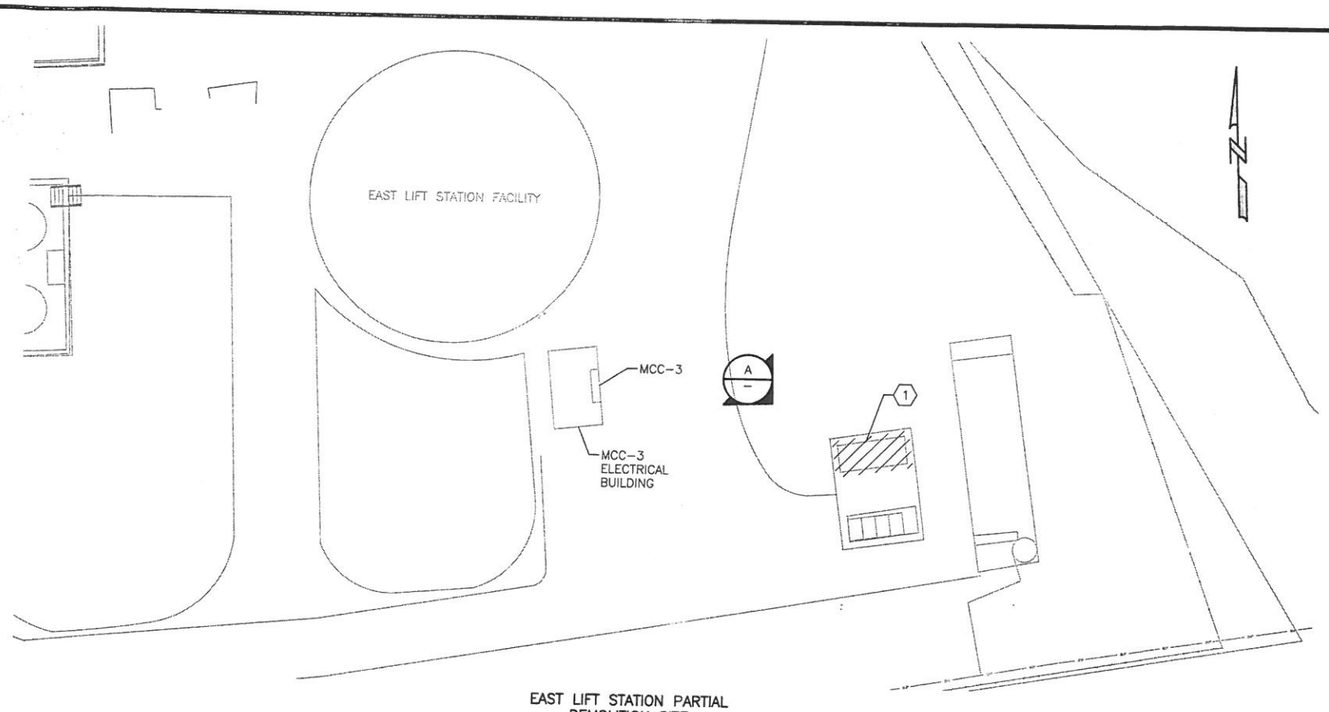

EAST LIFT STATION PARTIAL
DEMOLITION SITE

PLAN

1" = 16'

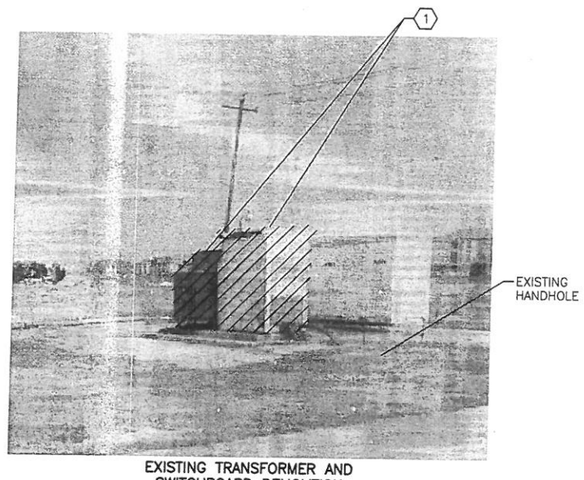

EXISTING TRANSFORMER AND
SWITCHBOARD DEMOLITION

PHOTOGRAPH A

NOTES:

1. DEMOLISH EXISTING EAST LIFT STATION TRANSFORMER AND OUTDOOR SWITCHBOARD. TO SHEET EB-2 FOR ADDITIONAL INFORMATIO
2. SEAL CRACKS ON EXISTING CONDULET WITH GROUTING COMPOUND OF PREPOLYMER URETH RESIN.
3. ALL WORK SHALL BE COORDINATED WITH THE OWNER.

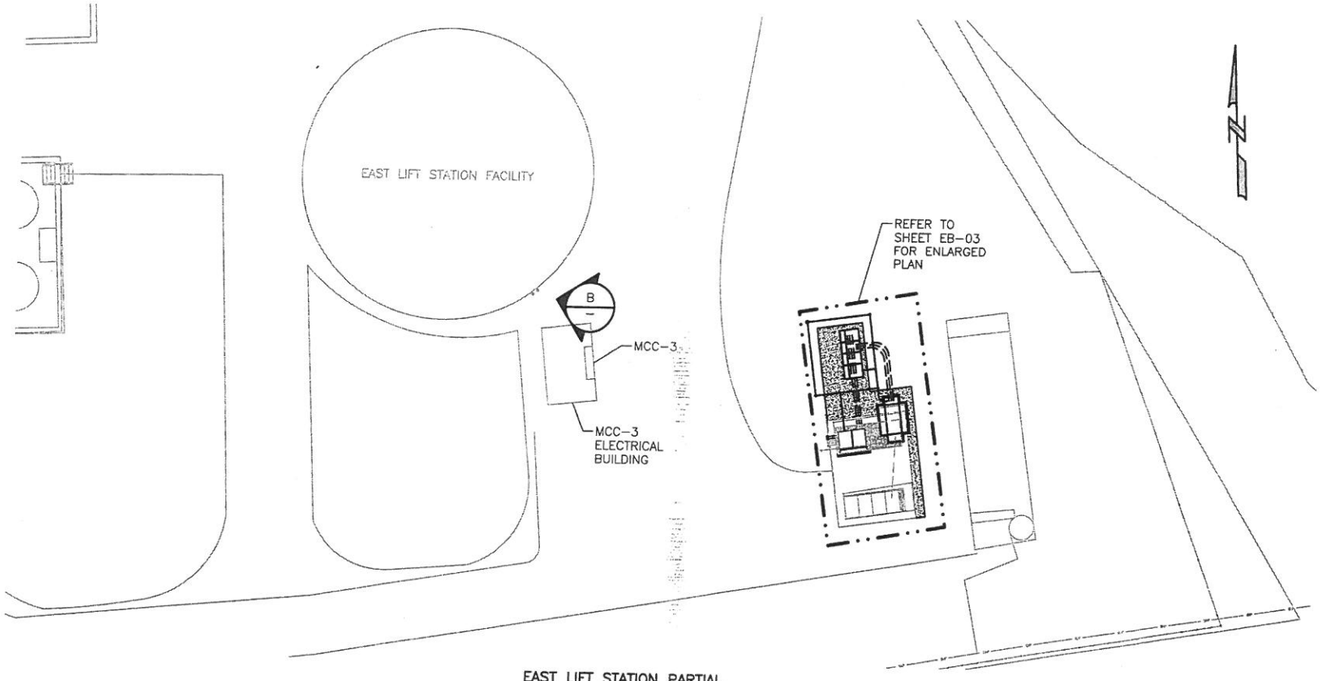

EAST LIFT STATION PARTIAL
MODIFICATION SITE

PLAN

1" = 16'

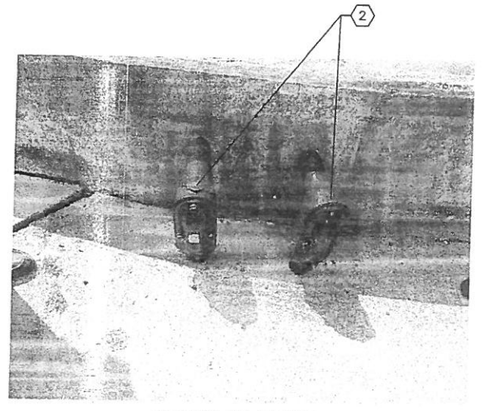

PRIMARY AND BACKUP
AIR CELL TUBING

PHOTOGRAPH B

DATE	REVISION

GAI
Gupta & Associates, Inc.
consulting engineering
Registration No. F-2593
7322 Southwest Freeway, Suite 410
Houston, Texas 77074
Tel: 713-636-2936
Fax: 713-636-2937
email:hforouzan@gaiconsulting.com

H. A. FOROUZAN
77748
REGISTERED
PROFESSIONAL ENGINEER
03/15/2013

LJA Engineering Inc.
2929 Briarpark Drive
Suite 600
Houston, Texas 77042
Phone 713.953.5
Fax 713.953.5
FRN - F-1

SURVEYED BY: AMANI ENG. | FB NO.: P-5679

CITY OF HOUSTON
DEPARTMENT OF PUBLIC WORKS AND ENGINEERING

ALMEDA SIMS WWTP & SF
IMPROVEMENTS PACKAGE-
ELECTRICAL
EAST LIFT STATION PARTIAL
DEMOLITION & MODIFICATION
PARTIAL SITE PLAN & PHOTO

WBS NUMBER	
R-000298-0008-4	
DRAWING SCALE	
1" = 16'	
CITY OF HOUSTON, PM	
IRAJ RANJBAR, P.E.	
SHEET NO. 65 OF 117	

DWG: EB-01

Z:\HB14_Houston Almeda Sims WWTP Improvement\Drawings\Electrical\Working\EB-01.dwg

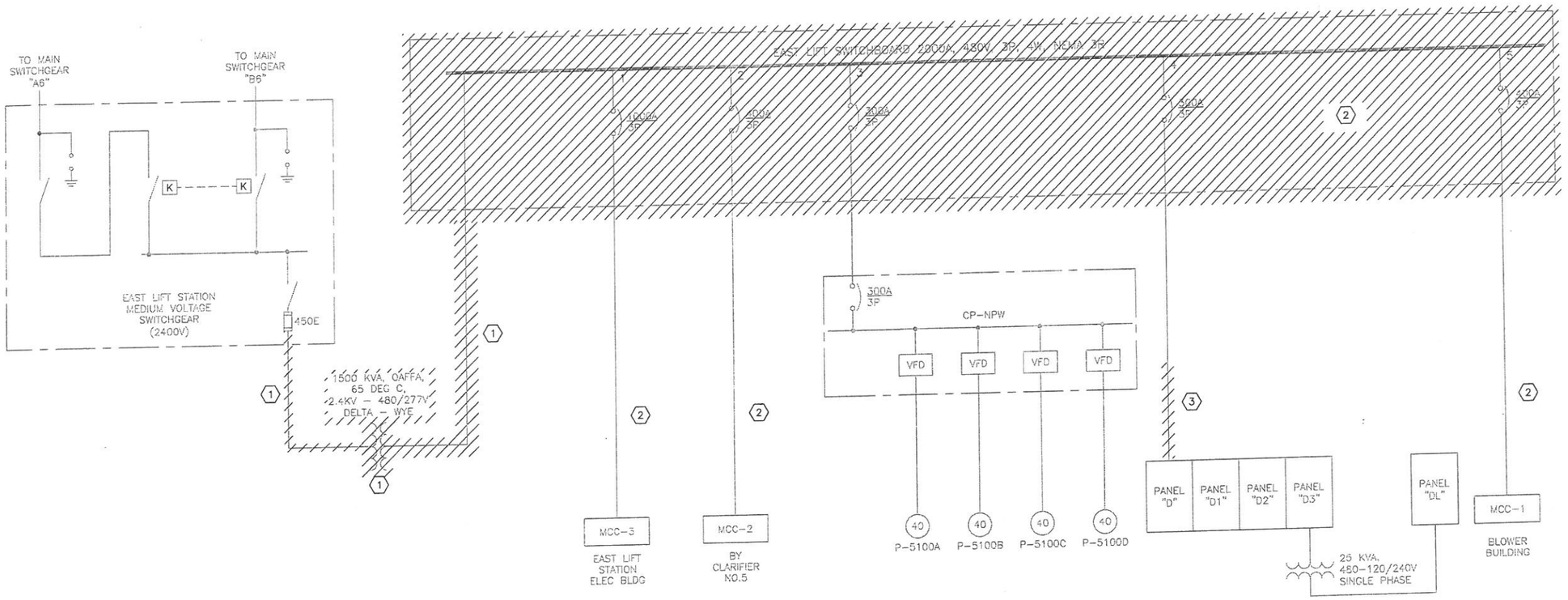

EAST LIFT STATION SUBSTATION
ONE-LINE DEMOLITION
DIAGRAM

NOTES:

1. DEMOLISH EXISTING TRANSFORMER ALONG WITH THE PRIMARY AND SECONDARY WIRING. REUSE THE CONDUITS FEEDING PRIMARY SIDE OF THE TRANSFORMER.
2. DEMOLISH EXISTING 2000A EAST LIFT STATION SUBSTATION. ALL EXISTING WIRES AND CONDUITS SHALL REMAIN IN PLACE TO BE RECONNECTED TO THE NEW SWITCHGEAR.
3. DEMOLISH EXISTING WIRING. THE UNDERGROUND CONDUIT SHALL REMAIN IN PLACE AND CAPPED ON BOTH ENDS. SEE SHEET EC-04 FOR NEW SERVICE.

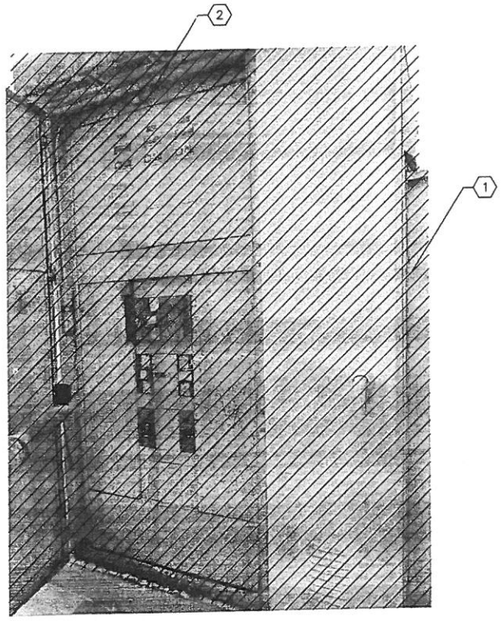

480V SWITCHBOARD
AND 1500KVA TRANSFORMER
PHOTOGRAPH A

DATE	REVISION	BY

GAI
Gupta & Associates, Inc.
consulting engineering
Registration No. F-2593
7322 Southwest Freeway Suite 410
Houston, Texas 77074
Tel: 713-636-2934
Fax: 713-636-2937
email:hforouzan@gaiconsulting.com

STATE OF TEXAS
H. A. FOROUZAN
77748
REGISTERED PROFESSIONAL ENGINEER
03/15/2013

LJA Engineering Inc.
2929 Briarpark Drive
Suite 600
Houston, Texas 77042
Phone 713.953.520
Fax 713.953.502
FRN - F-138

SURVEYED BY: AMANI ENG. | FB NO.: P-5679

CITY OF HOUSTON
DEPARTMENT OF PUBLIC WORKS AND ENGINEERING

ALMEDA SIMS WWTP & SP
IMPROVEMENTS PACKAGE-
ELECTRICAL
EAST LIFT STATION SUBSTATION
DEMOLITION
ONE-LINE DIAGRAM & PHOTO

WBS NUMBER	R-000298-0008-4
DRAWING SCALE	NTS
CITY OF HOUSTON, PM	IRAJ RANJBAR, P.E.
SHEET NO.	66 OF 117

PUBLIC WORKS & ENGINEERING
50431
CITY OF HOUSTON
HOUSTON, TEXAS

DWG: EB-02

Z:\H814_Houston Almeda Sims WWTP Improvement\Drawings\Electrical\Working\EB-02.dwg

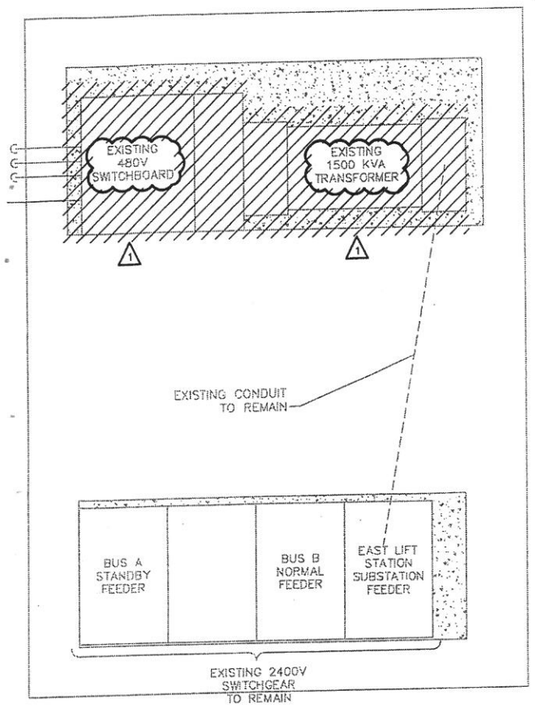

EXISTING SUBSTATION LINE-UPS

PLAN

3/8" = 1'-0"

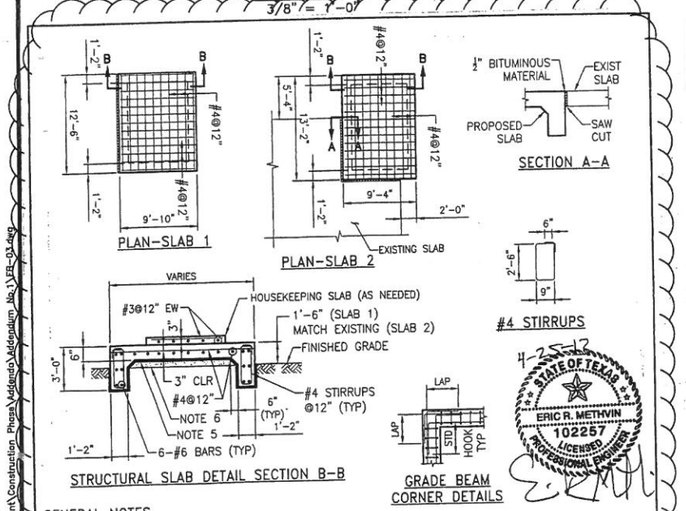

GENERAL NOTES

1. CONCRETE CONSTRUCTION SHALL CONFORM TO THE PROJECT SPECIFICATIONS AND ACI 318 BUILDING CODE FOR REINFORCED CONCRETE. WHERE THE PROJECT SPECIFICATIONS CONFLICT WITH ACI 318, STRICTER SPECIFICATIONS SHALL GOVERN.
2. ALL CAST-IN-PLACE CONCRETE SHALL HAVE A MINIMUM 28-DAY STRENGTH OF 3,000 PSI WHEN TESTED IN ACCORDANCE WITH ASTM DESIGNATION C39. CALCIUM CHLORIDE SHALL NOT BE USED AS ADDITIVES.
3. CONCRETE PLACEMENT IN HOT OR COLD WEATHER SHALL CONFORM TO THE PROVISIONS OF ACI 305R OR 306R, RESPECTIVELY.
4. ALL REINFORCING STEEL SHALL BE GRADE 60 STEEL AS PER ASTM A615. ALL LAP SPLICES FOR CONTINUOUS REINFORCING STEEL SHALL BE 30 BAR DIAMETER UNLESS OTHERWISE SPECIFIED. ALL REINFORCING SHOWN TO BE HOOKED SHALL HAVE STANDARD HOOK AS PER ACI 315.
5. VAPOR BARRIER MEMBRANE FOR FOUNDATION CONSTRUCTION SHALL BE 10-MIL POLYETHYLENE. JOINTS ALONG SAID MEMBRANE SHALL BE LAPPED 6 INCHES AND SEALED WITH ADHESIVE TO PROVIDE A CONTINUOUS MOISTURE BARRIER UNDER THE ENTIRE SLAB. CARE SHALL BE TAKEN NOT TO PUNCTURE MEMBRANE.
6. 6" SUB-BASE COMPACTED TO 95% OF THE MAX. DRY DENSITY DETERMINED BY THE STANDARD PROCTOR METHOD (ASTM D-698)
7. SEE GEOTECH REPORT NO. 1140188501 FOR ALL RECOMMENDATIONS.
8. EXCAVATE AND REMOVE TO A DEPTH AT LEAST 4 FEET OF SOIL IN THE SLAB AREAS AND EXTEND AT LEAST 5 FEET BEYOND THE SLAB AREA. REPLACE WITH STRUCTURAL FILL.
9. CONTRACTOR IS RESPONSIBLE FOR SHORING TO SUPPORT EXISTING STRUCTURE.

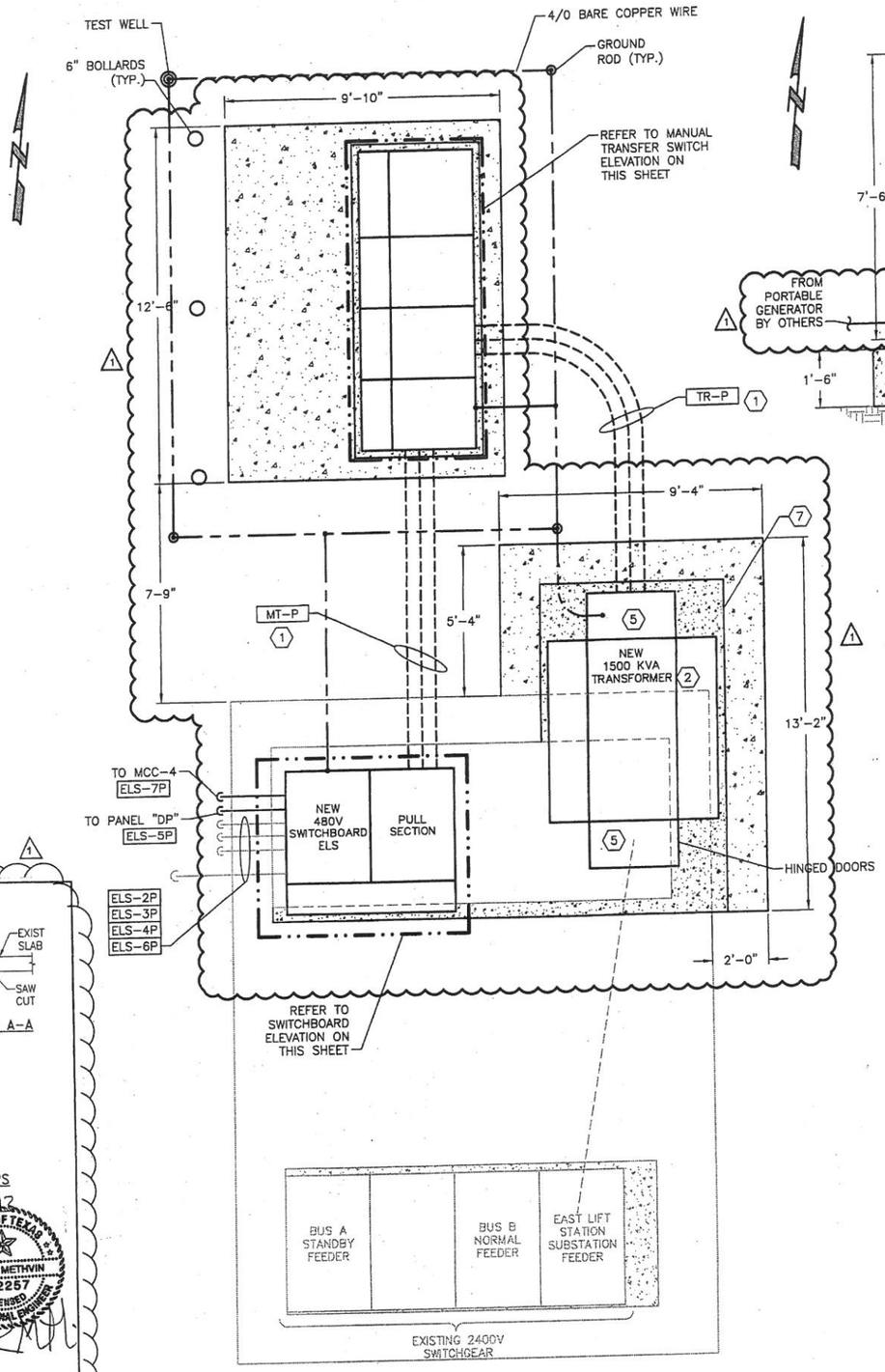

MODIFIED SUBSTATION LINE-UPS

PLAN (8)

3/8" = 1'-0"

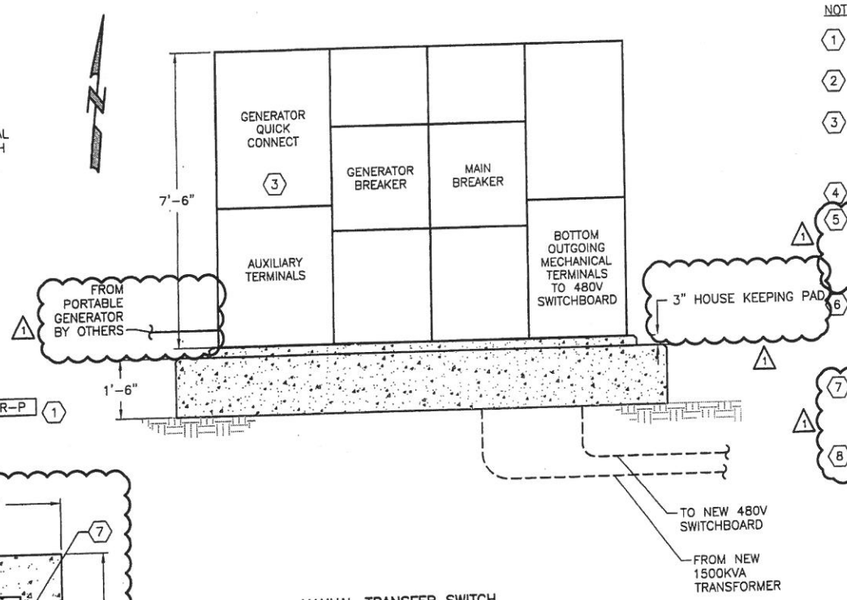

MANUAL TRANSFER SWITCH

ELEVATION

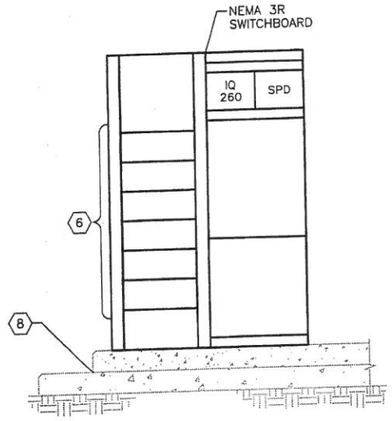

SWITCHBOARD

ELEVATION

NTS

NOTES:

1. REFER TO SHEET E-3 FOR ADDITIONAL INFORMATION ON CABLE CODES.
2. THE NEW TRANSFORMER SHALL BE PLACED IN THE SAME LOCATION AS THE DEMOLISHED.
3. PROVIDE CAM LOCKS AND MECHANICAL LUGS. CONTRACTOR SHALL COORDINATE WITH OWNER BEFORE ORDERING THE CAM LOCKS THAT MATCH THE OWNER'S PORTABLE GENERATOR.
4. REFER TO ONE-LINE DIAGRAMS ON SHEET EB-03.
5. THE DOORS SHALL BE HINGED AND LOCKABLE. PROVIDE A 4' WATER PROOFING ON THE BOTTOM OF THE TRANSFORMER. LOCATE THE TRANSFORMER IN SUCH A WAY THAT IT CAN EASILY CONNECT TO EXISTING PRIMARY CONDUCTORS.
6. THE CIRCUIT BREAKER SHALL BE PLACED AT THE SAME HEIGHT SO THAT EXISTING WIRE CAN BE REUSED WITHOUT ANY SPLICES. THE CONTRACTOR SHALL BE RESPONSIBLE TO COORDINATE THE LOCATION WITH THE MANUFACTURER.
7. EXTEND THE EXISTING PAD FOR THE NEW TRANSFORMER. THE ACTUAL SIZE SHALL BE DETERMINED BASED ON THE TRANSFORMER PROVIDED.
8. EXISTING DIMENSIONS ARE APPROXIMATE AND SHALL BE FIELD VERIFIED.

DATE	REVISION	BY
04-22-13	ADDENDUM NO.1	LS
04/25/13	Addition of Concrete Slab Details	MS

GAI
Gupta & Associates, Inc.
consulting engineering
Registration No. F-2593
7322 Southwest Freeway Suite 410
Houston, Texas 77074
Tel: 713-636-2930
Fax: 713-636-2987
email: hforouzan@gaiconsulting.com

STATE OF TEXAS
H. A. FOROUZAN
77748
REGISTERED
PROFESSIONAL ENGINEER
03/15/2013

LJA Engineering Inc.
2929 Briarpark Drive
Suite 600
Houston, Texas 77042
Phone 713.953.5200
Fax 713.953.5026
FRN - F-1386

SURVEYED BY: AMANI ENG. | FB NO.: P-5679

CITY OF HOUSTON

DEPARTMENT OF PUBLIC WORKS AND ENGINEERING

ALMEDA SIMS WWTP & SPF IMPROVEMENTS PACKAGE-3

ELECTRICAL

EAST LIFT STATION SUBSTATION DEMOLITION AND MODIFICATION PLAN & ELEVATION

WBS NUMBER	R-000298-0008-4
DRAWING SCALE	3/8"=1'-0"
CITY OF HOUSTON, PM	IRAJ RANJBAR, P.E.
SHEET NO.	67 OF 117

DWG: EB-03

ADDENDUM NO.1

50431

REGISTERED PROFESSIONAL ENGINEER

HOUSTON, TEXAS

Z:\H814C_Houston Almeda Sims WWTP Improvement\Construction Phase\Addenda\Addendum No.1\EB-03.dwg

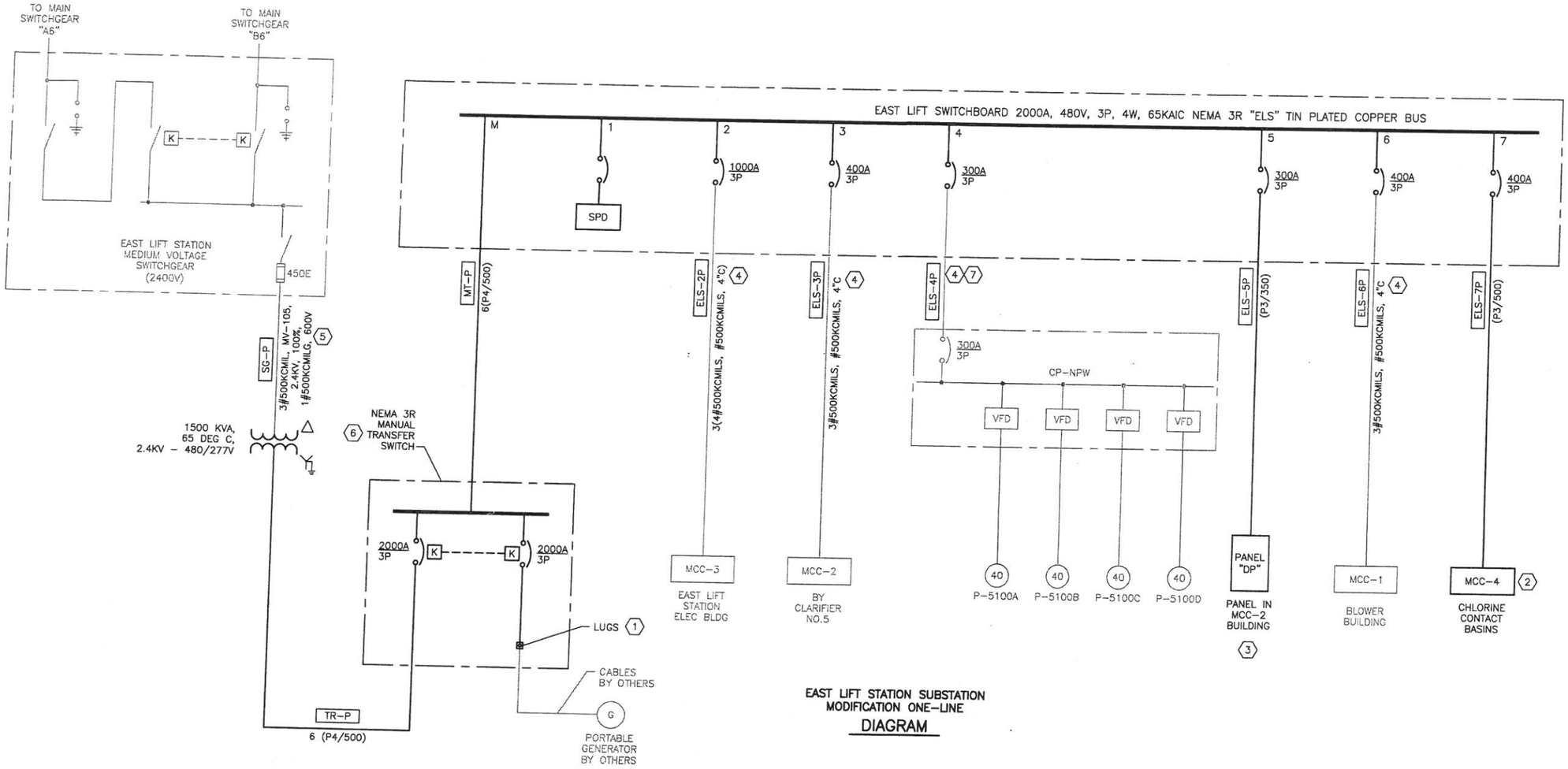

EAST LIFT STATION SUBSTATION MODIFICATION ONE-LINE DIAGRAM

NOTES:

1. PROVIDE MECHANICAL LUGS AS REQUIRED. CONNECT THE PORTABLE GENERATOR. SEE EB-03 FOR ADDITIONAL INFORMATION.
2. SEE SHEET EC-18 FOR MCC-4 ONE-LINE DIAGRAM.
3. REFER TO SHEET EC-08 FOR PANEL "DP", INFORMATION.
4. THESE SIZES FOR THE EXISTING FEEDER AR FOR INFORMATION ONLY. CONTRACTOR SHALI VERIFY THE ACTUAL SIZES.
5. NEW 5KV WIRE TO BE INSTALLED IN EXISTIN CONDUIT.
6. THE MANUAL TRANSFER SWITCH SHALL BE F AT 65KAIC AND SHALL HAVE TIN PLATED CO BUS.
7. 3#350KCMILS, #350 KCMILS, 3"C

DATE	REVISION

GAI
Gupta & Associates, Inc.
consulting engineering
Registration No. F-2593
7322 Southwest Freeway Suite 410
Houston, Texas 77074
Tel: 713-636-2936
Fax: 713-636-2987
email:hforouzan@gaiconsulting.com

03/15/2013
STATE OF TEXAS
H. A. FOROUZAN
77748
REGISTERED PROFESSIONAL ENGINEER

LJA Engineering Inc.
2929 Briarpark Drive
Suite 600
Houston, Texas 77042
Phone 713.953.5
Fax 713.953.5
FRN - F-13

SURVEYED BY: AMANI ENG. | FB NO.: P-5679

CITY OF HOUSTON
DEPARTMENT OF PUBLIC WORKS AND ENGINEERING

ALMEDA SIMS WWTP & SP
IMPROVEMENTS PACKAGE-
ELECTRICAL
EAST LIFT STATION SUBSTATION MODIFICATION
ONE-LINE DIAGRAM

WBS NUMBER	
R-000298-0008-4	
DRAWING SCALE	
NTS	
CITY OF HOUSTON, PM	
IRAJ RANJBAR, P.E.	
SHEET NO. 68 OF 117	

50431
REGISTERED PROFESSIONAL ENGINEER
HOUSTON, TEXAS

DWG: EB-04

Z:\V8814_Houston Almeda Sims WWTP Improvement\Drawings\Electrical\Working\EB-04.dwg

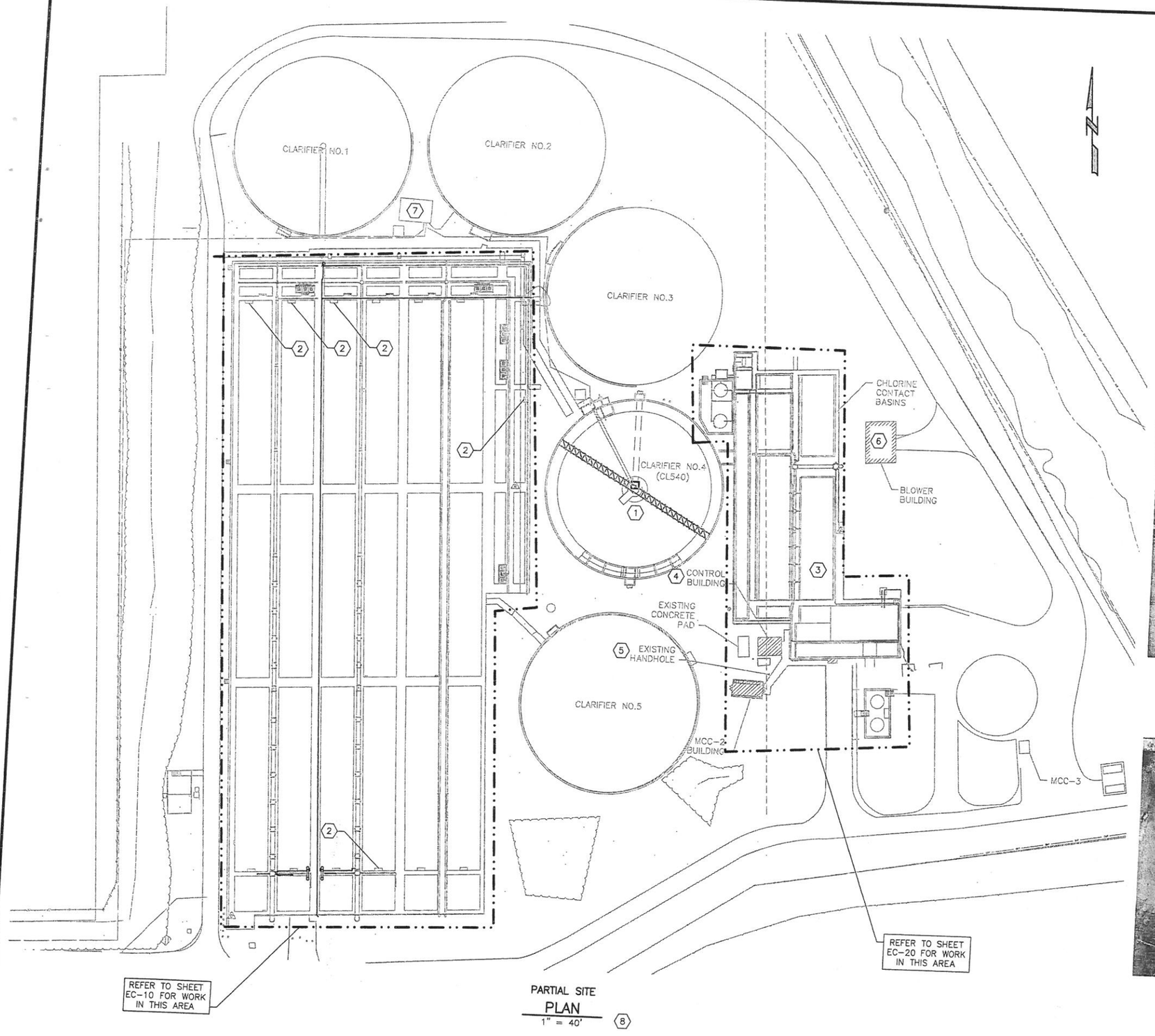

PARTIAL SITE PLAN
1" = 40'

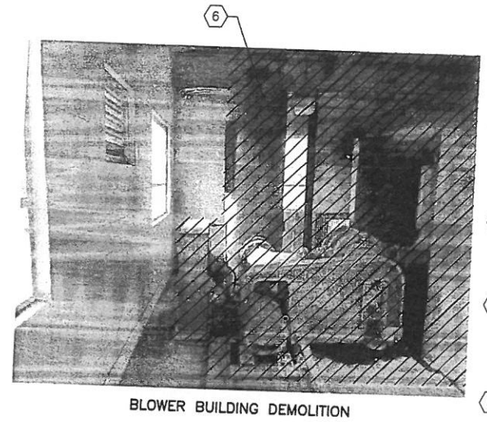

BLOWER BUILDING DEMOLITION
PHOTOGRAPH A

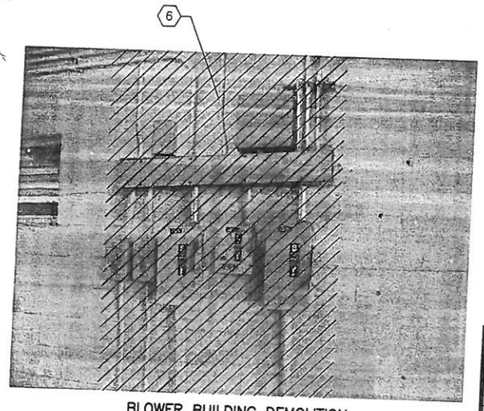

BLOWER BUILDING DEMOLITION
PHOTOGRAPH B

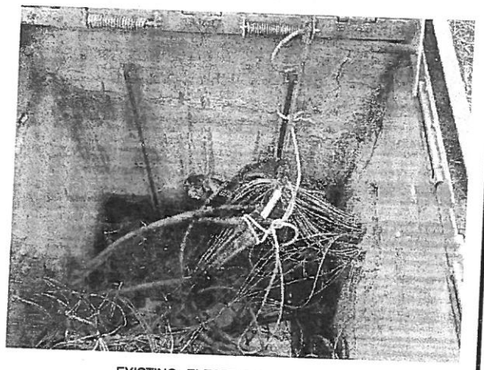

EXISTING ELECTRICAL HANDHOLE
PHOTOGRAPH C

NOTES:

1. CONTRACTOR SHALL DEMOLISH ALL WIRING (POW AND CONTROLS), CONDUITS, DUCTBANK, J-BOXE CONTROL PANEL, MOUNTING HARDWARE, LIGHT POLES, METERING AND MONITORING DEVICES ASSOCIATED WITH THE DEMOLISHED CLARIFIER N (CL-540)
2. CONTRACTOR SHALL DISCONNECT THE POWER AN CONTROLS WIRING CONNECTED TO THE 5 GATE OPERATORS SCHEDULED FOR DEMOLITION. RECONNECT THE EXISTING WIRING TO THE NEW INSTALLED GATE ACTUATORS AS SHOWN ON SHEE EC-10.
3. CONTRACTOR SHALL DEMOLISH ALL DAMAGED POWER, CONTROL WIRING, AND SUPPORT BRACKE ASSOCIATED WITH THE DAMAGED GATE OPERATORS LOCATED BY THE CHLORINE CONTACT BASINS. REPLACE WITH NEW WIRE, CONDUIT, AND SUPPOR
4. CONTRACTOR SHALL REMOVE ALL EXISTING RUSTE DAMAGED LIGHTING PANEL "A", EXHAUST FANS, J-BOXES, WIREWAY, RECEPTACLES, LIGHT SWITCHE AND LIGHTING FIXTURES IN DISINFECTION BUILDING AND REPLACE WITH NEW AS SHOWN ON SHEET EC-11.
5. CONTRACTOR SHALL REPLACE ALL THE SPLICED WIRES WITHIN THE ELECTRICAL HANDHOLE IN FRON OF THE CONTROL BUILDING. REFER TO NOTE-1 O SHEET EC-02 FOR MORE INFORMATION
6. DEMOLISH ALL ELECTRICAL SYSTEMS ASSOCIATED WITH THE DEMOLITION OF THE BLOWER BUILDING. DEMOLISH THE FEEDER FROM MCC-2 AND LABEL BREAKERS AS SPARES. UNDERGROUND CONDUITS SHALL REMAIN IN PLACE AND BE CAPPED ON BOTH ENDS.
7. CONTRACTOR SHALL DEMOLISH ALL ELECTRICAL SYSTEMS ASSOCIATED WITH THE EAST AND WEST SCUM PUMPS SCHEDULED FOR DEMOLITION.
8. CONTRACTOR SHALL REMOVE ALL WIRES FROM THE CONDUIT FOR EQUIPMENT BEING DEMOLISHED.

DATE	REVISION	BY

GAI
Gupta & Associates, Inc.
consulting engineering
Registration No. F-2593
7322 Southwest Freeway Suite 410
Houston, Texas 77074
Tel: 713-636-2930
Fax: 713-636-2987
email:hforouzan@gaiconsulting.com

H. A. FOROUZAN
77748
REGISTERED PROFESSIONAL ENGINEER
STATE OF TEXAS
03/15/2013

LJA Engineering Inc.
2929 Briarpark Drive
Suite 600
Houston, Texas 77042
Phone 713.953.5200
Fax 713.953.5026
FRN - F-1386

SURVEYED BY: AMANI ENG. | FB NO.: P-5679

CITY OF HOUSTON
DEPARTMENT OF PUBLIC WORKS AND ENGINEERING

ALMEDA SIMS WWTP & SPF IMPROVEMENTS PACKAGE-3
ELECTRICAL
CLARIFIERS AREA AND CHLORINE CONTACT BASIN DEMOLITION
PARTIAL SITE PLAN & PHOTOS

WBS NUMBER	R-000298-0008-4
DRAWING SCALE	1"= 40'
CITY OF HOUSTON, PM	IRAJ RANJBAR, P.E.
SHEET NO.	69 OF 117

PUBLIC WORKS & ENGINEERING
50431
CITY
HOUSTON, TEXAS

DWG: EC-01

ORIGINAL SCALE IN INCHES

Z:\1814_Houston Almeda Sims WWTP Improvement\Drawings\Electrical\Working\EC-01.dwg

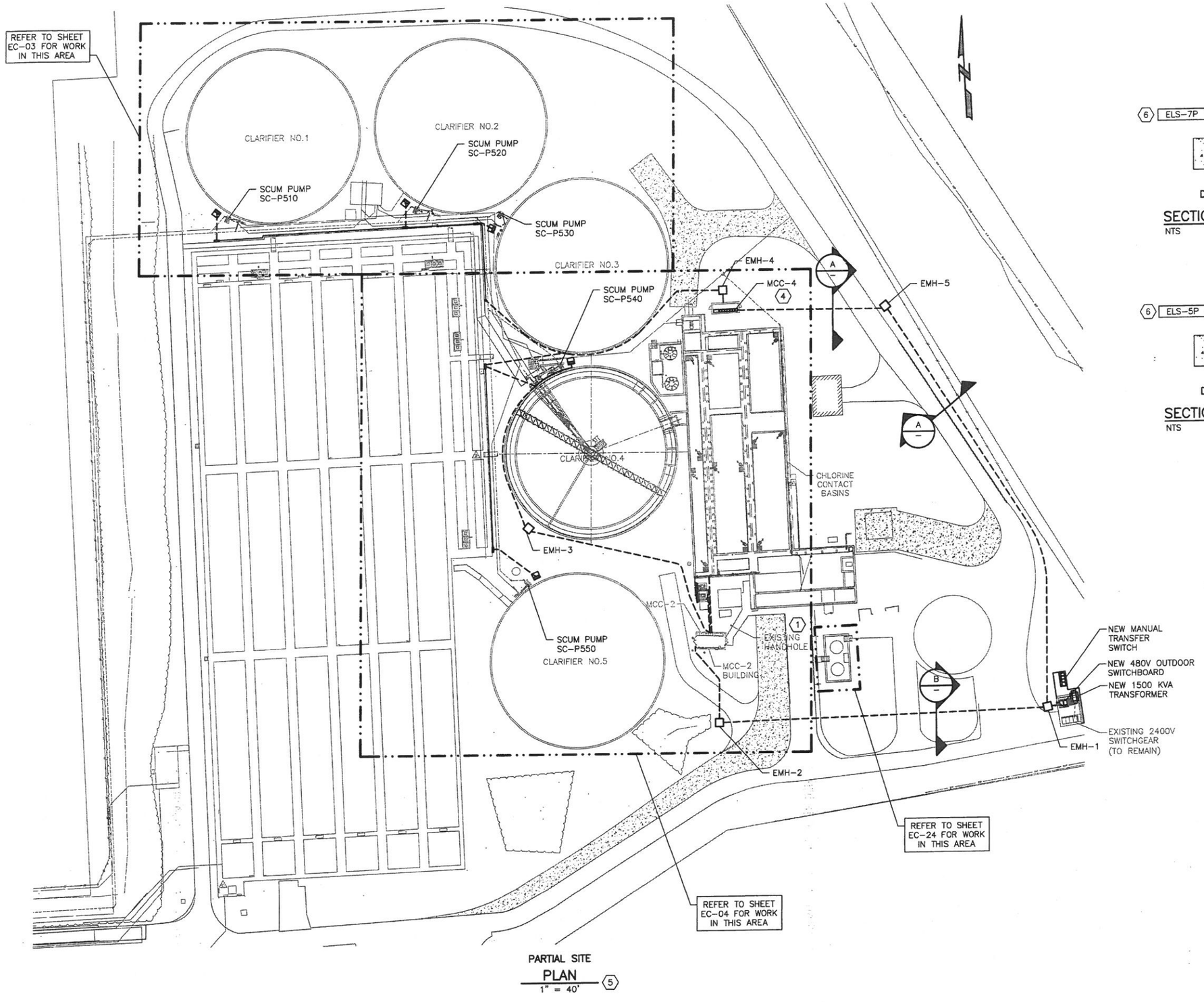

PARTIAL SITE PLAN
1" = 40' (5)

6 ELS-7P — 4"C SPARE

DUCTBANK SECTION A
NTS

6 ELS-5P — 3"C SPARE

DUCTBANK SECTION B
NTS

NOTES:

1. CONTRACTOR SHALL REPLACE THE EXISTING CONTROL WIRES LOCATED IN THE HANDHOLE. PROVIDE 30 RUNS OF 150 FT. EACH FOR A TO OF 4500 FT. FOR ESTIMATING PURPOSES. CONTRACTOR SHALL FIELD VERIFY THE INDIVIDUA LENGTHS OF WIRES FOR EACH CONTROL CIRCUI NO SPLICING IS ALLOWED.
2. THE CONTRACTOR SHALL TRACE THE ORIGIN ANI DESTINATION OF EACH CONTROL WIRE IN THE MANHOLE AND PROVIDE A TABLE TO DOCUMENT THIS IN FORM OF THE SHOP DRAWING.
3. THE CONTRACTOR SHALL REPLACE THE ENTIRE LENGTH OF THE WIRE AND THEN DEMONSTRATE THAT THE EQUIPMENT IS PROPERLY CONNECTED
4. REFER TO SHEET EC-18 FOR ONE-LINE DIAGRA FOR MCC-4.
5. REFER TO SHEETS EC-03, EC-04, EC-12, EC- AND EC-14 FOR ADDITIONAL DUCTBANKS SECTI(
6. REFER TO SHEET EB-4.

DATE	REVISION

GAI
Gupta & Associates, Inc.
consulting engineering
Registration No. F-2593
7322 Southwest Freeway Suite 410
Houston, Texas 77074
Tel: 713-436-7936
Fax: 713-436-7987
email: hforouzan@gaiconsulting.com

H. A. FOROUZAN 77748 REGISTERED PROFESSIONAL ENGINEER
03/15/2013

LJA Engineering Inc.
2929 Briarpark Drive
Suite 600
Houston, Texas 77042
Phone 713.95
Fax 713.95
FRN -

SURVEYED BY: AMANI ENG. | FB NO.: P-567

CITY OF HOUSTO
DEPARTMENT OF PUBLIC WORKS AND ENGINEERI

ALMEDA SIMS WWTP & S
IMPROVEMENTS PACKAGE
ELECTRICAL
CLARIFIERS AREAS AND CHLOI
CONTACT BASINS MODIFICATI
PARTIAL SITE PLAN

WBS NUMBER	R-000298-0008-4
DRAWING SCALE	1"= 40' AND 1/4"=1'-0"
CITY OF HOUSTON, PM	IRAJ RANJBAR, P.E.
SHEET NO.	70 OF 117

PUBLIC WORKS AND 50431 HOUSTON, TEXAS

DWG: EC-02

Z:\H814...Houston Almeda Sims WWTP Improvement\Drawings\Electrical\Working\EC-02.dwg

NOTES:

(1) REFER TO RISER DIAGRAM ON SHEET EC-15 FOR ADDITIONAL INFORMATION ON THE SCUM PUMP.

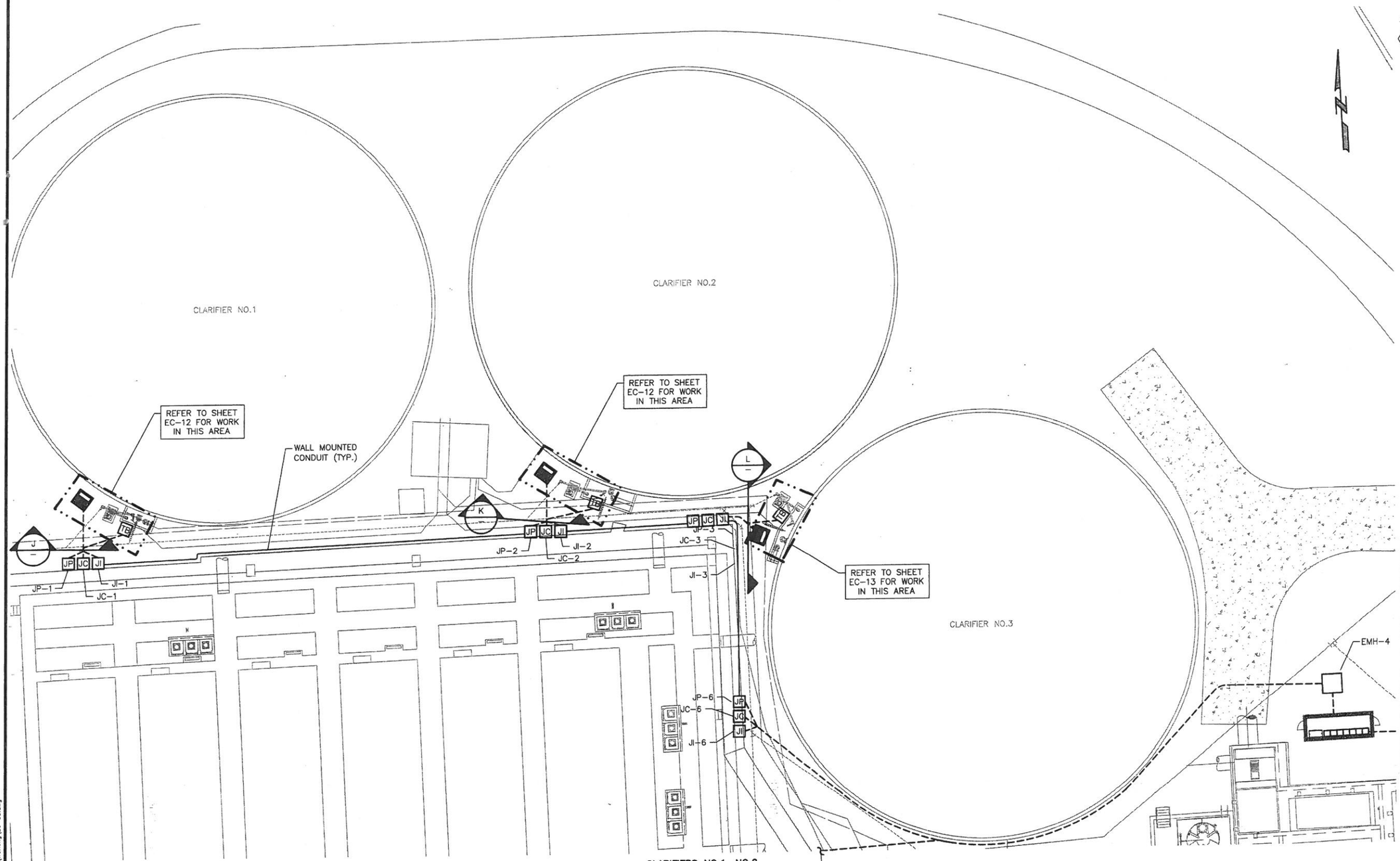

CLARIFIERS NO.1, NO.2, & NO.3 PARTIAL SITE PLAN

1" = 16'

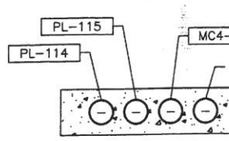

DUCTBANK SECTION J NTS

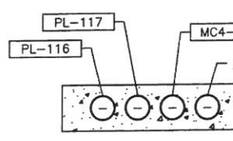

DUCTBANK SECTION K NTS

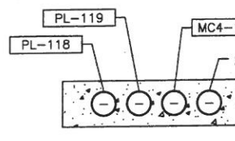

DUCTBANK SECTION L NTS

DATE	REVISION	B

GAI
Gupta & Associates, Inc.
consulting engineering
Registration No. F-2593
7322 Southwest Freeway Suite 410
Houston, Texas 77074
Tel: 713-636-7936
Fax: 713-636-2987
email:hforouzan@gaiconsulting.com

03/15/2013

STATE OF TEXAS
H. A. FOROUZAN
77748
REGISTERED PROFESSIONAL ENGINEER

LJA Engineering Inc.
2929 Briarpark Drive
Suite 600
Houston, Texas 77042
Phone 713.953.52
Fax 713.953.50
FRN - F-13

SURVEYED BY: AMANI ENG. | FB NO.: P-5679

CITY OF HOUSTON

DEPARTMENT OF PUBLIC WORKS AND ENGINEERING

ALMEDA SIMS WWTP & SF IMPROVEMENTS PACKAGE-

ELECTRICAL
CLARIFIERS NO.1, NO.2, & NO. PARTIAL SITE PLAN

WBS NUMBER	
R-000298-0008-4	
DRAWING SCALE	
1"= 40' AND 1/4"=1'-0"	
CITY OF HOUSTON, PM	
IRAJ RANJBAR, P.E.	
SHEET NO. 71 OF 117	

PUBLIC WORKS & ENGINEERING
50431
REGISTERED ENGINEER
STATE OF TEXAS

DWG: EC-03

Z:\HB14_Houston Almeda Sims WWTP Improvement\Drawings\Electrical\Working\EC-03.dwg

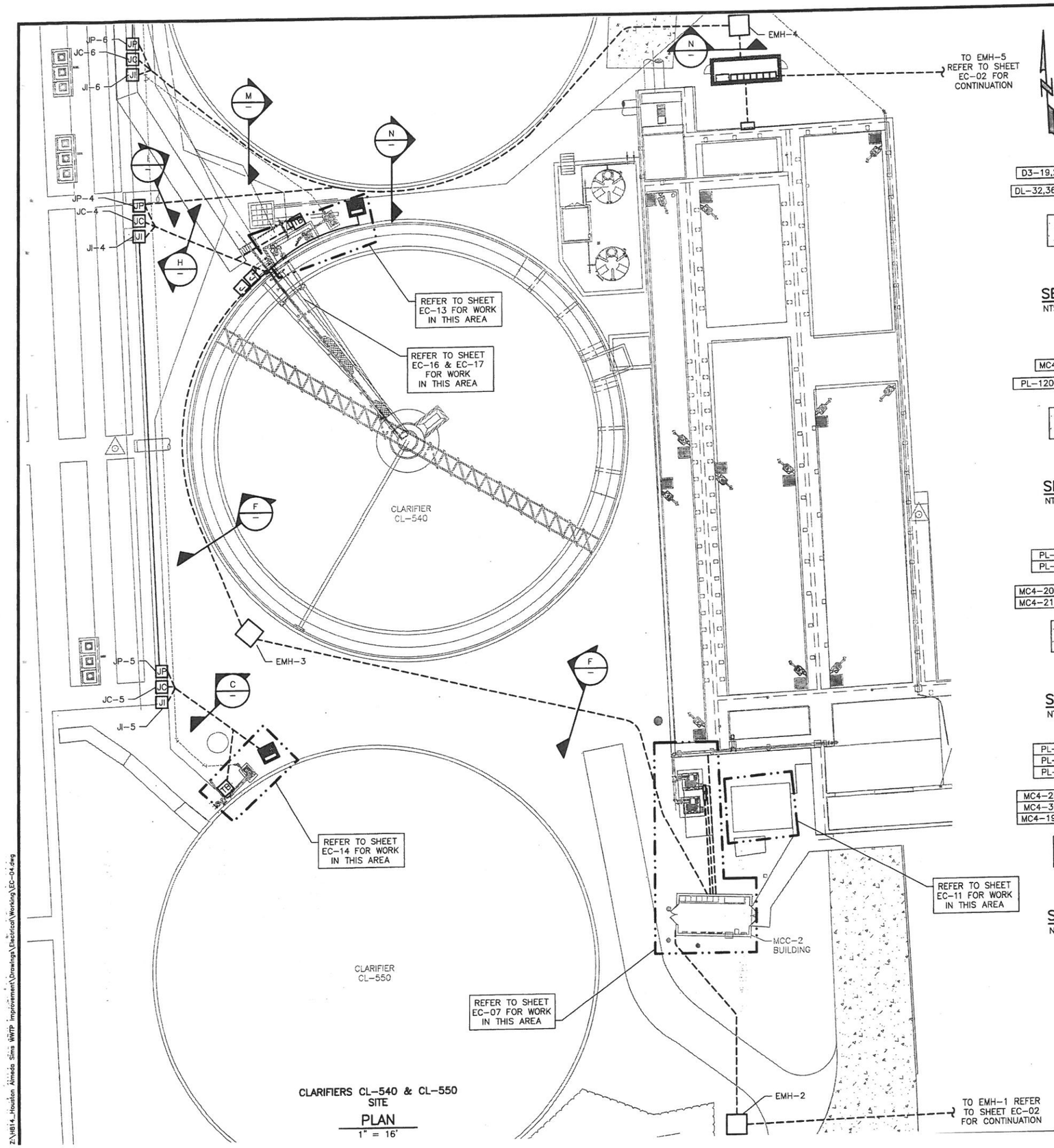

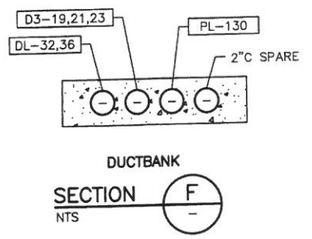

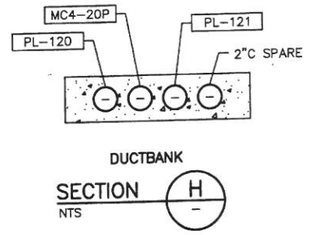

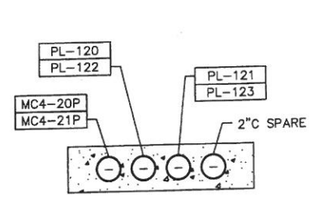

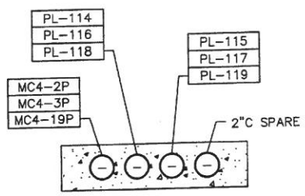

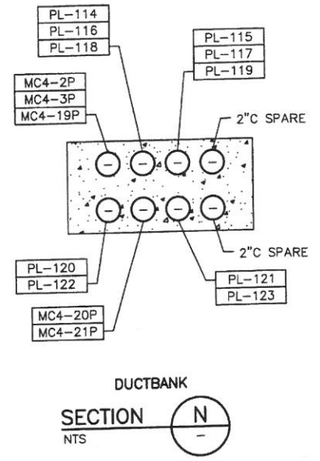

DATE	REVISION	BY

GAI
Gupta & Associates, Inc.
consulting engineering
Registration No. F-2593
7322 Southwest Freeway Suite 410
Houston, Texas 77074
Tel: 713-636-2936
Fax: 713-636-2987
email: hforouzan@gaiconsulting.com

H. A. FOROUZAN
77748
REGISTERED PROFESSIONAL ENGINEER
STATE OF TEXAS
03/15/2013

LJA Engineering Inc.
2929 Briarpark Drive
Suite 600
Houston, Texas 77042
Phone 713.953.5200
Fax 713.953.5026
FRN - F-1386

SURVEYED BY: AMANI ENG. | FB NO.: P-5679

CITY OF HOUSTON
DEPARTMENT OF PUBLIC WORKS AND ENGINEERING

ALMEDA SIMS WWTP & SPF IMPROVEMENTS PACKAGE-3
ELECTRICAL
CLARIFIERS CL-540, CL-550 & CHLORINE CONTACT BASINS MODIFICATION PARTIAL SITE PLAN

WBS NUMBER	R-000298-0008-4
DRAWING SCALE	1"= 40' AND 1/4"=1'-0"
CITY OF HOUSTON, PM	IRAJ RANJBAR, P.E.
SHEET NO.	72 OF 117

DWG: EC-04

30431
REGISTERED

Z:\1614_Houston Almeda Sims WWTP Improvement\Drawings\Electrical\Working\EC-04.dwg

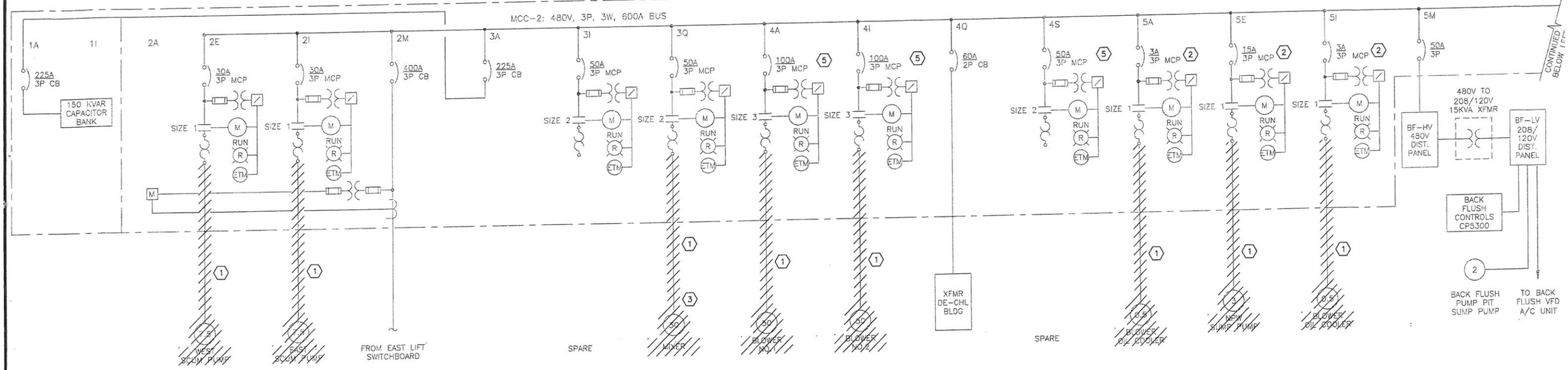

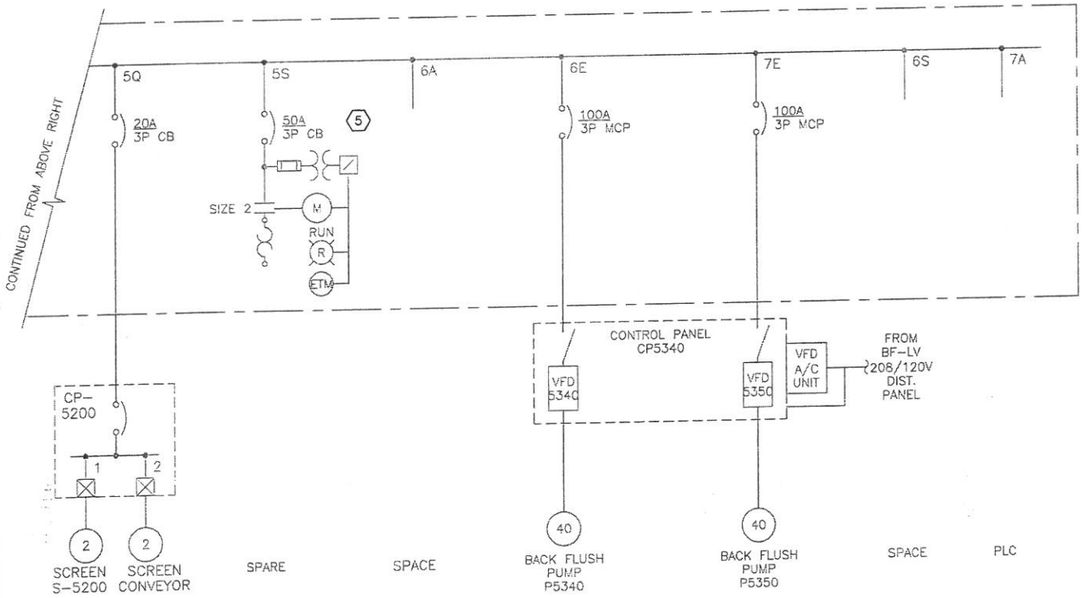

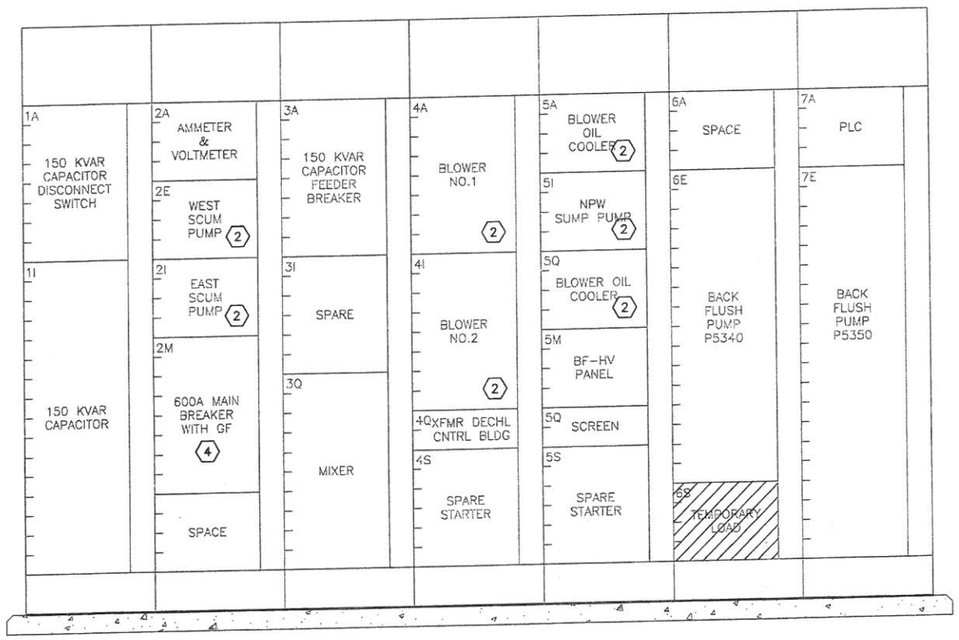

PARTIAL MCC-2 ONE-LINE DEMOLITION DIAGRAM

NOTES:

1. DEMOLISH THE WIRES, CONDUITS, AND ELECTRICAL ASSOCIATED WITH THE DEMOLISHED EQUIPMENT. UNDERGROUND CONDUIT SHALL REMAIN IN PLACE AND BE CAPPED ON BOTH ENDS.
2. RE-USE EXISTING ELECTRICAL DEVICE FOR NEW EQUIPMENT OR LABEL AS SPARE IF NOT USED. REFER TO SHEET EC-04 FOR ADDITIONAL INFORMATION.
3. THIS MIXER SHALL BE REPLACED WITH NEW AT THE SAME LOCATION. CONTRACTOR SHALL CONNECT THE NEW MIXER TO MCC-4 AS SHOWN ON SHEET EC-XX. UNDERGROUND CONDUIT SHALL BE ABANDONED IN PLACE AND BE CAPPED ON BOTH ENDS.
4. CONTRACTOR SHALL FIELD VERIFY THE SIZE OF THE MAIN BREAKER AND UPDATE THE RECORD DRAWINGS.
5. DEMOLISH THE EXISTING STARTER AND LEAVE SPACE FOR A NEW STARTER PER SHEET EC-04.

DATE	REVISION	BY

GAI
Gupta & Associates, Inc.
consulting engineering
Registration No. F-2593
7322 Southwest Freeway Suite 410
Houston, Texas 77074
Tel: 713-636-2936
Fax: 713-636-2987
email.lifestation@gaiconsulting.com

STATE OF TEXAS
H. A. FOROUZAN
77748
REGISTERED PROFESSIONAL ENGINEER
03/15/2013

LJA Engineering Inc.
2929 Briarpark Drive
Suite 600
Houston, Texas 77042
Phone 713.953.5200
Fax 713.953.5028
FRN - F-1386

SURVEYED BY: AMANI ENG. | FB NO.: P-5679

CITY OF HOUSTON
DEPARTMENT OF PUBLIC WORKS AND ENGINEERING

ALMEDA SIMS WWTP & SPI
IMPROVEMENTS PACKAGE-

ELECTRICAL
MCC-2 DEMOLITION
ONE-LINE DIAGRAM & ELEVATIO

WBS NUMBER	R-000298-0008-4
DRAWING SCALE	NTS
CITY OF HOUSTON, PM	IRAJ RANJBAR, P.E.
SHEET NO. 73 OF 117	

DWG: EC-05

Z:\1814_Houston Almeda Sims WWTP Improvement\Drawings\Electrical\Working\EC-05.dwg

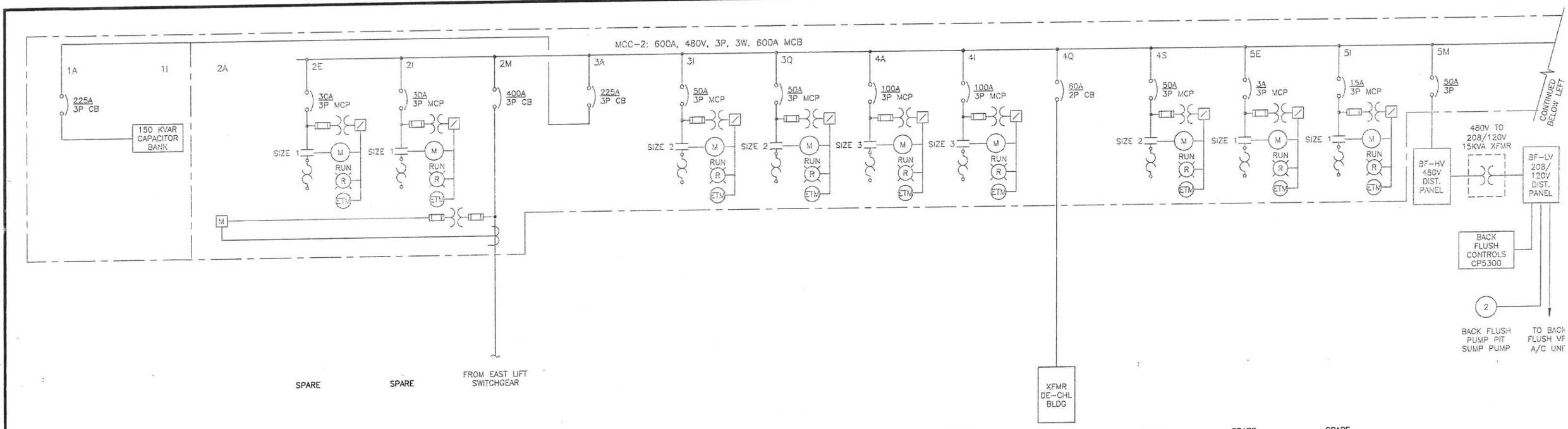

PARTIAL MCC-2 ONE-LINE MODIFICATION DIAGRAM

MCC-2 MODIFICATION ELEVATION NTS (3)

NOTES:

(1) INSTALL NEW CIRCUIT BREAKER IN EXISTING MCC.

(2) MODIFY THE MCC DOORS AND FURNISHED AND INSTALL ALL HARDWARE FOR INSTALLATION OF NEW BREAKER.

(3) PROVIDE NEW NAMEPLATES ON THE MCC.

DATE	REVISION	BY

GAI
Gupta & Associates, Inc.
consulting engineering
Registration No. F-2593
7322 Southwest Freeway Suite 410
Houston, Texas 77074
Tel: 713-436-2936
Fax: 713-436-2987
email:hforouzan@gaiconsulting.com

STATE OF TEXAS
H. A. FOROUZAN
77748
REGISTERED PROFESSIONAL ENGINEER
03/15/2013

LJA Engineering Inc.
2929 Briarpark Drive
Suite 600
Houston, Texas 77042
Phone 713.953.5200
Fax 713.953.5026
FRN - F-1386

SURVEYED BY: AMANI ENG. | FB NO.: P-5679

CITY OF HOUSTON
DEPARTMENT OF PUBLIC WORKS AND ENGINEERING

ALMEDA SIMS WWTP & SPF IMPROVEMENTS PACKAGE-3

ELECTRICAL
MCC-2 MODIFICATION
ONE-LINE DIAGRAM & ELEVATION

WBS NUMBER	R-000298-0008-4
DRAWING SCALE	NTS
CITY OF HOUSTON, PM	IRAJ RANJBAR, P.E.
SHEET NO.	74 OF 117

DWG: EC-06

Z:\H814_Houston Almeda Sims WWTP improvement\Drawings\Electrical\Working\EC-06.dwg

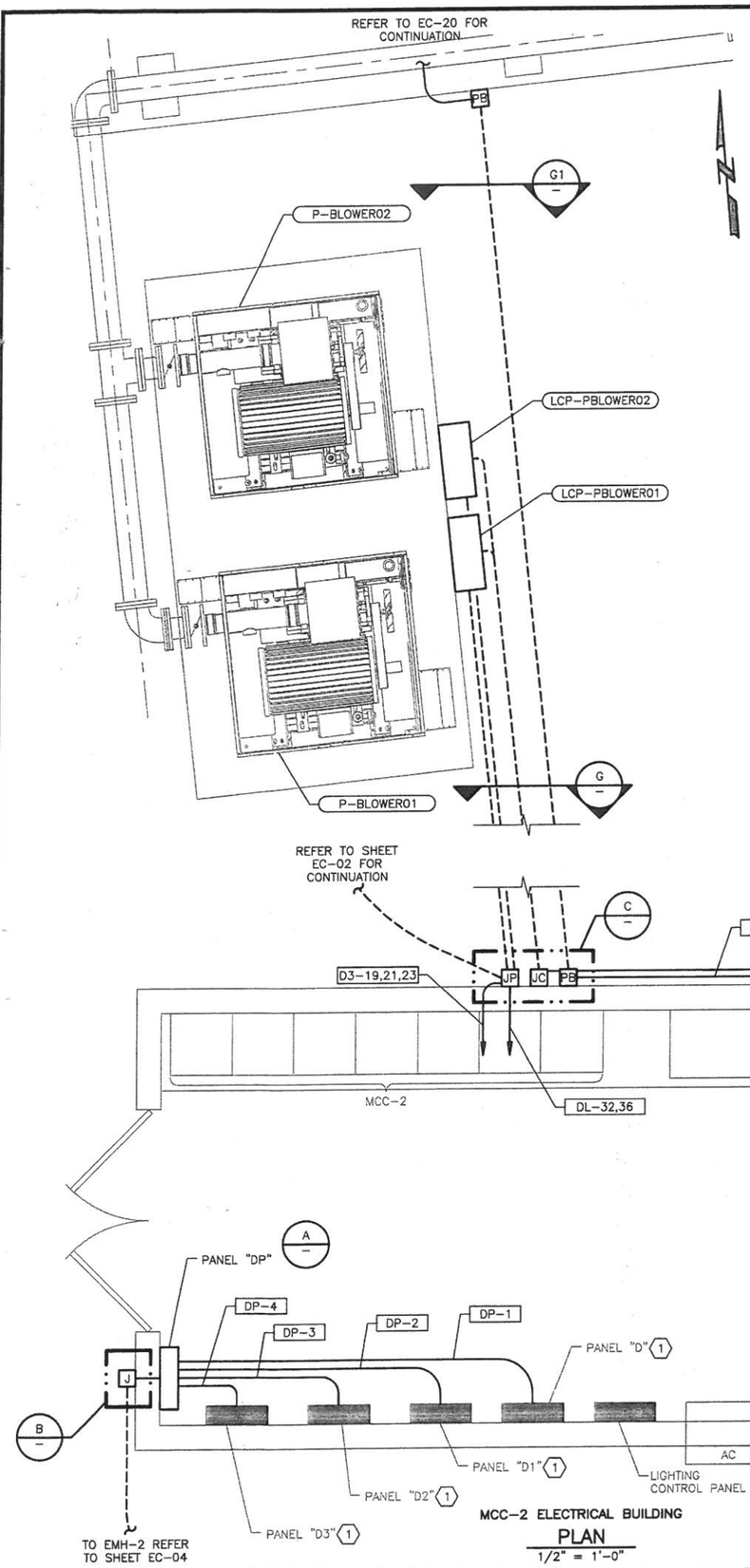

MCC-2 ELECTRICAL BUILDING

PLAN

1/2" = 1'-0"

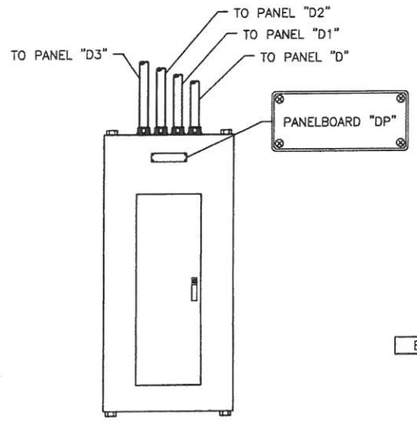

PANELBOARD

DETAIL A

NTS

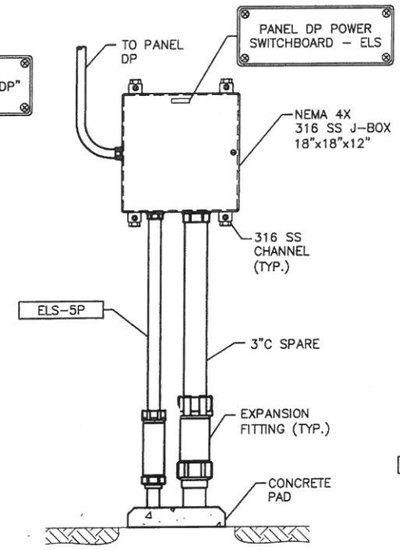

JUNCTION BOXES

DETAIL B

NTS

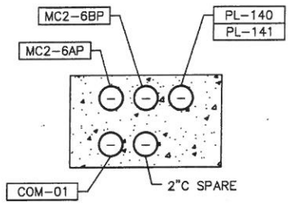

DUCTBANK

SECTION G

NTS

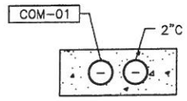

DUCTBANK

SECTION G1

NTS

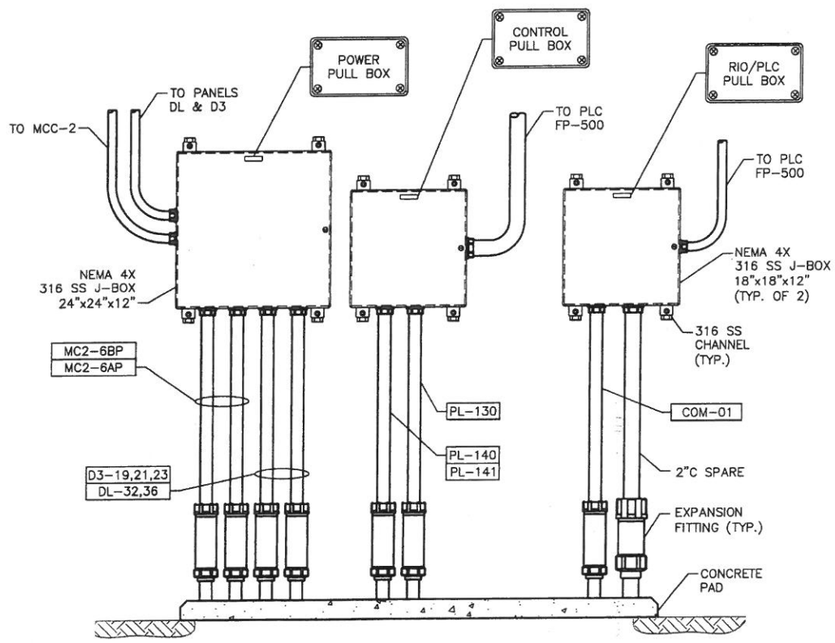

JUNCTION BOXES

DETAIL C

NTS

NOTES:

1. REFER TO SHEETS EC-08 AND EC-09 FOR PANEL D, D1, D2, AND D3 MODIFICATIONS.
2. REMOVE EXISTING WIRING FEEDING PANEL "D" AND REPLACE WITH NEW TO FEED NEW DISTRIBUTION PANEL "DP" VIA A NEW DUCTBANK AS SHOWN ON SHEET EC-02. THE UNDERGROUND CONDUIT SHALL REMAIN IN PLACE IN THE EXISTING DUCTBANK.
3. REFER TO SHEET EC-17 FOR ADDITIONAL INFORMATION ON THE CLARIFIER 4(CL-540) RISER DIAGRAM.
4. UPDATE PANEL DIRECTORY TO REFLECT THE CHANGES. REFER TO SHEET EC-17.

DATE	REVISION	BY

GAI
Gupta & Associates, Inc.
consulting engineering
Registration No. F-2593
7322 Southwest Freeway Suite 410
Houston, Texas 77074
Tel: 713-436-2926
Fax: 713-436-2987
email:Information@gaiconsulting.com

03/15/2013

STATE OF TEXAS
H. A. FOROUZAN
77748
REGISTERED PROFESSIONAL ENGINEER

LJA Engineering Inc.
2929 Briarpark Drive
Suite 600
Houston, Texas 77042
Phone 713.953.5200
Fax 713.953.5026
FRN - F-1386

SURVEYED BY: AMANI ENG. | FB NO.: P-5679

CITY OF HOUSTON

DEPARTMENT OF PUBLIC WORKS AND ENGINEERING

ALMEDA SIMS WWTP & SPF IMPROVEMENTS PACKAGE-3

ELECTRICAL
MCC-2 BUILDING PLAN MODIFICATION ELECTRICAL PLAN

WBS NUMBER	R-000298-0008-4
DRAWING SCALE	1/2" = 1'-0"
CITY OF HOUSTON, PM	IRAJ RANJBAR, P.E.
SHEET NO.	75 OF 117

DWG: EC-07

PUBLIC WORKS & ENGINEERING
50431
HOUSTON, TEXAS

Z:\V814_Houston Almeda Sims WWTP Improvement\Drawings\Electrical\Working\EC-07.dwg

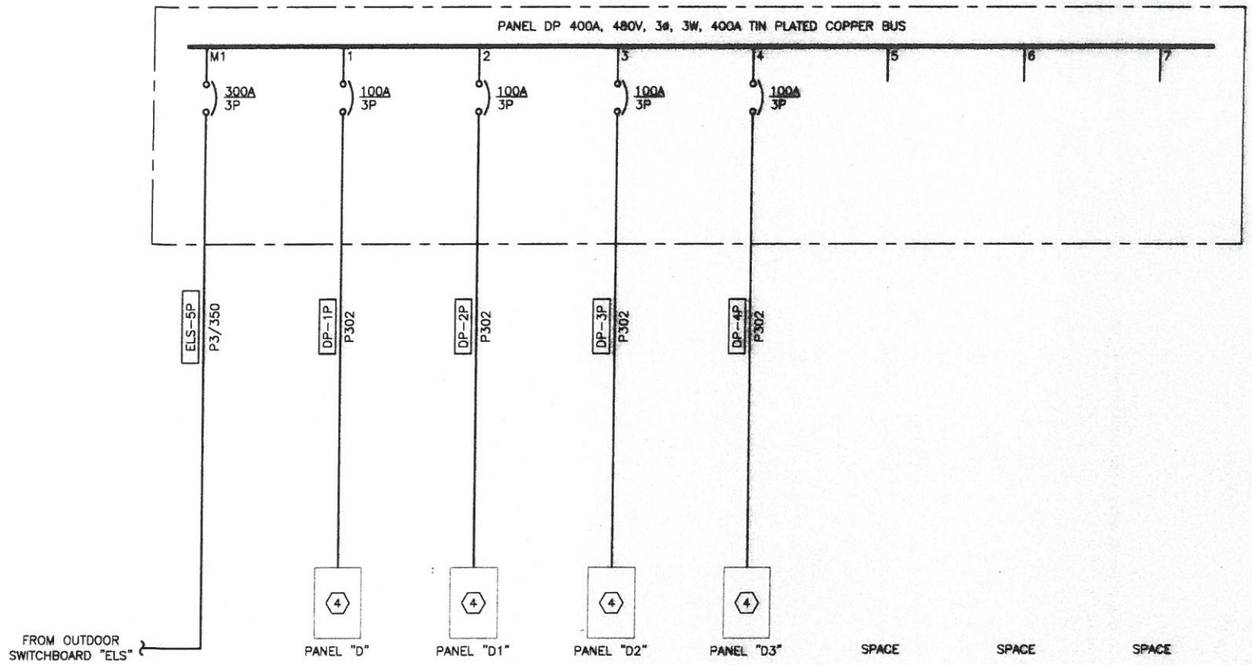

PANEL "DP" ONE-LINE DIAGRAM

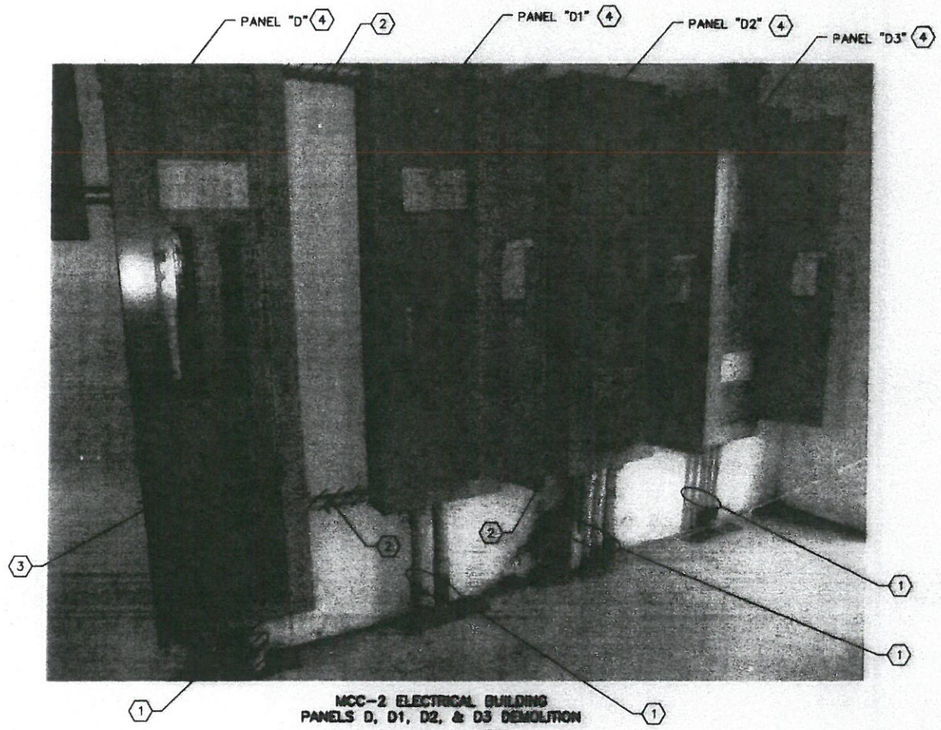

MCC-2 ELECTRICAL BUILDING
PANELS D, D1, D2, & D3 DEMOLITION

PHOTOGRAPH A

NOTES:

1. DEMOLISH EXISTING PANEL "D" FEEDER UNDERGROUND CONDUIT SHALL BE LEFT IN PLACE AND CAPPED ON BOTH ENDS. LEAVE IN PLACE ALL OUTGOING CONDUITS AND WIRING CONNECTING THE LOADS.
2. REMOVE ALL THRU FEEDS CONNECTING THE ELECTRICAL PANELS.
3. CONTRACTOR SHALL REPLACE THE EXISTING 300A BREAKER WITH MAIN LUGS ONLY SUITABLE FOR A 100A FEEDER.
4. MODIFY THE PANELBOARD AS REQUIRED TO ACCEPT NEW WIRES.

DATE	REVISION	BY

GAI
Gupta & Associates, Inc.
consulting engineering
Registration No. F-2593
7322 Southwest Freeway Suite 410
Houston, Texas 77074
Tel: 713-636-2936
Fax: 713-636-2987
email: information@gaiconsulting.com

03/15/2013

STATE OF TEXAS
H. A. FOROUZAN
77748
REGISTERED PROFESSIONAL ENGINEER

LJA Engineering Inc.
2929 Briarpark Drive
Suite 600
Houston, Texas 77042
Phone 713.953.5200
Fax 713.953.5026
FRN - F-1386

SURVEYED BY: AMANI ENG. | FB NO.: P-5679

CITY OF HOUSTON
DEPARTMENT OF PUBLIC WORKS AND ENGINEERING

ALMEDA SIMS WWTP & SPF IMPROVEMENTS PACKAGE-3
ELECTRICAL
PANEL "DP" ONE-LINE DIAGRAM AND PANEL D THRU PANEL D3 DEMOLITION PHOTO

WBS NUMBER	R-000298-0008-4
DRAWING SCALE	1/2" = 1'-0"
CITY OF HOUSTON, PM	IRAJ RANJBAR, P.E.
SHEET NO.	76 OF 117

PUBLIC WORKS & ENGINEERING
50431
HOUSTON, TEXAS

DWG: EC-08

Z:\4814_Houston Almeda Sims WWTP Improvement\Drawings\Electrical\Working\EC-08.dwg

PANEL BOARD: D	BUS: COPPER	MAINS: 300A, 3P (3)
SERVICE: 480V, 3Ø, 4W	RATING: 400A	LOCATION: MCC-2 ELECTRICAL BUILDING
MOUNTING: SURFACE	FEED: TOP	

CKT #	BRKR SIZE	WIRE SIZE	LOAD	LOAD	WIRE SIZE	BRKR SIZE	CKT #
1				STREET LIGHTING	12	20/1	2
3	20/3	12	AERATION LIGHTING	W. SIDE AERATION LIGHT	12	20/1	4
5				SOUTHWEST CORNER CHLORINE LIGHT	12	20/1	6
7							8
9	20/3	12	CHLORINE LIGHTING	GATE VALVE 530E	14	15/3	10
11							12
13							14
15	15/3	14	GATE VALVE 530A	GATE VALVE 530H	14	15/3	16
17							18
19							20
21	15/3	14	GATE VALVE 530B	GATE VALVE 530G	14	15/3	22
23							24
25							26
27	15/3	14	GATE VALVE 530D	GATE VALVE 530J	14	15/3	28
29							30
31							32
33	15/3	14	GATE VALVE 530C	GATE VALVE 530I	14	15/3	34
35							36
37							38
39	15/3	14	GATE VALVE 530F	GATE VALVE 530L	14	15/3	40
41							42

PANEL "D" LOADS REMAIN UNCHANGED

PANEL BOARD: D1	BUS: COPPER	MAINS: MLO (2)
SERVICE: 480V, 3Ø, 4W	RATING: 400A	LOCATION: MCC-2 ELECTRICAL BUILDING
MOUNTING: SURFACE	FEED: TOP	

CKT #	BRKR SIZE	WIRE SIZE	LOAD	LOAD	WIRE SIZE	BRKR SIZE	CKT #
1							2
3	15/3	14	GATE VALVE 530K	GATE VALVE 520A	14	15/3	4
5							6
7							8
9	15/3	14	GATE VALVE 540A	GATE VALVE 520B	14	15/3	10
11							12
13							14
15	15/3	14	GATE VALVE 540B	GATE VALVE 520C	14	15/3	16
17							18
19							20
21	15/3	14	GATE VALVE 540C	GATE VALVE 520D	14	15/3	22
23							24
25							26
27	15/3	14	GATE VALVE 540D	GATE VALVE 520E	14	15/3	28
29							30
31							32
33	15/3	–	SPARE	GATE VALVE 520F	14	15/3	34
35							36
37							38
39	15/3	–	SPARE	GATE VALVE 540E	14	15/3	40
41							42

PANEL "D1" LOADS REMAIN UNCHANGED

NOTES:

(1) CONTRACTOR SHALL RECONNECT THE NEW CLARIFIER NO.4 MOTOR TO THE EXISTING CIRCU

(2) THE CONTRACTOR SHALL INSTALL LUGS TO MAT THE 100A FEEDER.

(3) CONTRACTOR SHALL REPLACE THE EXISTING 300 BREAKER WITH MAIN LUGS ONLY SUITABLE FOR 100A FEEDER.

(4) THE BREAKER FEEDING THIS LOAD IS NOW A SPARE.

(5) LOAD TO BE IDENTIFIED.

(6) CONTRACTOR SHALL PROVIDE NEW WIRE IN EXIST CONDUIT. ALL SURFACE MOUNTED CONDUIT AS T BASIN SHALL BE NEW.

PANEL BOARD: D2	BUS: COPPER	MAINS: MLO (2)
SERVICE: 480V, 3Ø, 4W	RATING: 400A	LOCATION: MCC-2 ELECTRICAL BUILDING
MOUNTING: SURFACE	FEED: TOP	

CKT #	BRKR SIZE	WIRE SIZE	LOAD	LOAD	WIRE SIZE	BRKR SIZE	CKT #
1							2
3	15/3	14	GATE VALVE 710C	GATE VALVE 710B	14	15/3	4
5							6
7							8
9	15/3	14	GATE VALVE 720A	GATE VALVE 710A	14	15/3	10
11							12
13							14
15	15/3	14	GATE VALVE 720B	WEIR GATE 730A	14	15/3	16
17							18
19							20
21	20/3	12	NPW COMPRESSOR	WEIR GATE 730B	14	15/3	22
23							24
25							26
27	20/3	12	CLARIFIER #5	~~OLD BLOWER BUILDING TK~~ (4)	12	20/3	28
29							30
31							32
33	–	–	SPACE	GATE VALVE 720C	14	15/3	34
35							36
37							38
39	–	–	SPACE	STRAINER	14	15/3	40
41							42

(6) (6)

PANEL "D2" LOADS ARE REDUCED

PANEL BOARD: D3	BUS: COPPER	MAINS: MLO (2)
SERVICE: 480V, 3Ø, 4W	RATING: 400A	LOCATION: MCC-2 ELECTRICAL BUILDING
MOUNTING: SURFACE	FEED: TOP	

CKT #	BRKR SIZE	WIRE SIZE	LOAD	LOAD	WIRE SIZE	BRKR SIZE	CKT #
1							2
3	30/3	10	CLARIFIER 1 & 2	SPARE	–	20/3	4
5							6
7							8
9	30/3	10	CLARIFIER 3	SPARE	–	20/3	10
11							12
13							14
15	30/3	10	EXISTING LOAD (5)	TRANSFORMER FOR PANEL "DL"	8	70/2	16
17				SPACE	–	–	18
19				SPACE	–	–	20
21	20/3	10	CLARIFIER 4 (1)	SPACE	–	–	22
23				SPACE	–	–	24
25	–	–	SPACE	SPACE	–	–	26
27	–	–	SPACE	SPACE	–	–	28
29	–	–	SPACE	SPACE	–	–	30
31	–	–	SPACE	SPACE	–	–	32
33	–	–	SPACE	SPACE	–	–	34
35	–	–	SPACE	SPACE	–	–	36
37	–	–	SPACE	SPACE	–	–	38
39	–	–	SPACE	SPACE	–	–	40
41	–	–	SPACE	SPACE	–	–	42

PANEL "D3" LOADS REMAIN UNCHANGED

DATE	REVISION	BY

GAI
Gupta & Associates, Inc.
consulting engineering
Registration No. F-2593
7322 Southwest Freeway Suite 410
Houston, Texas 77074
Tel: 713-636-7936
Fax: 713-636-2987
email: hforouzan@gaiconsulting.com

03/15/2013

STATE OF TEXAS
H. A. FOROUZAN
77748
REGISTERED PROFESSIONAL ENGINEER

LJA Engineering Inc.
2929 Briarpark Drive
Suite 600
Houston, Texas 77042
Phone 713.953.5200
Fax 713.953.5026
FRN - F-1386

SURVEYED BY: AMANI ENG. | FB NO.: P-5679

CITY OF HOUSTON

DEPARTMENT OF PUBLIC WORKS AND ENGINEERING

ALMEDA SIMS WWTP & SPF IMPROVEMENTS PACKAGE-3

ELECTRICAL
PANEL "D", "D1", "D2", & "D3" SCHEDULES

WBS NUMBER
R-000298-0008-4
DRAWING SCALE
1/2" = 1'-0"
CITY OF HOUSTON, PM
IRAJ RANJBAR, P.E.
SHEET NO. 77 OF 117

PUBLIC WORKS & ENGINEERING
50431
HOUSTON, TEXAS

DWG: EC-09

2:\4814_Houston Almeda Sims WWTP improvement\Drawings\Electrical\Working\EC-09.dwg

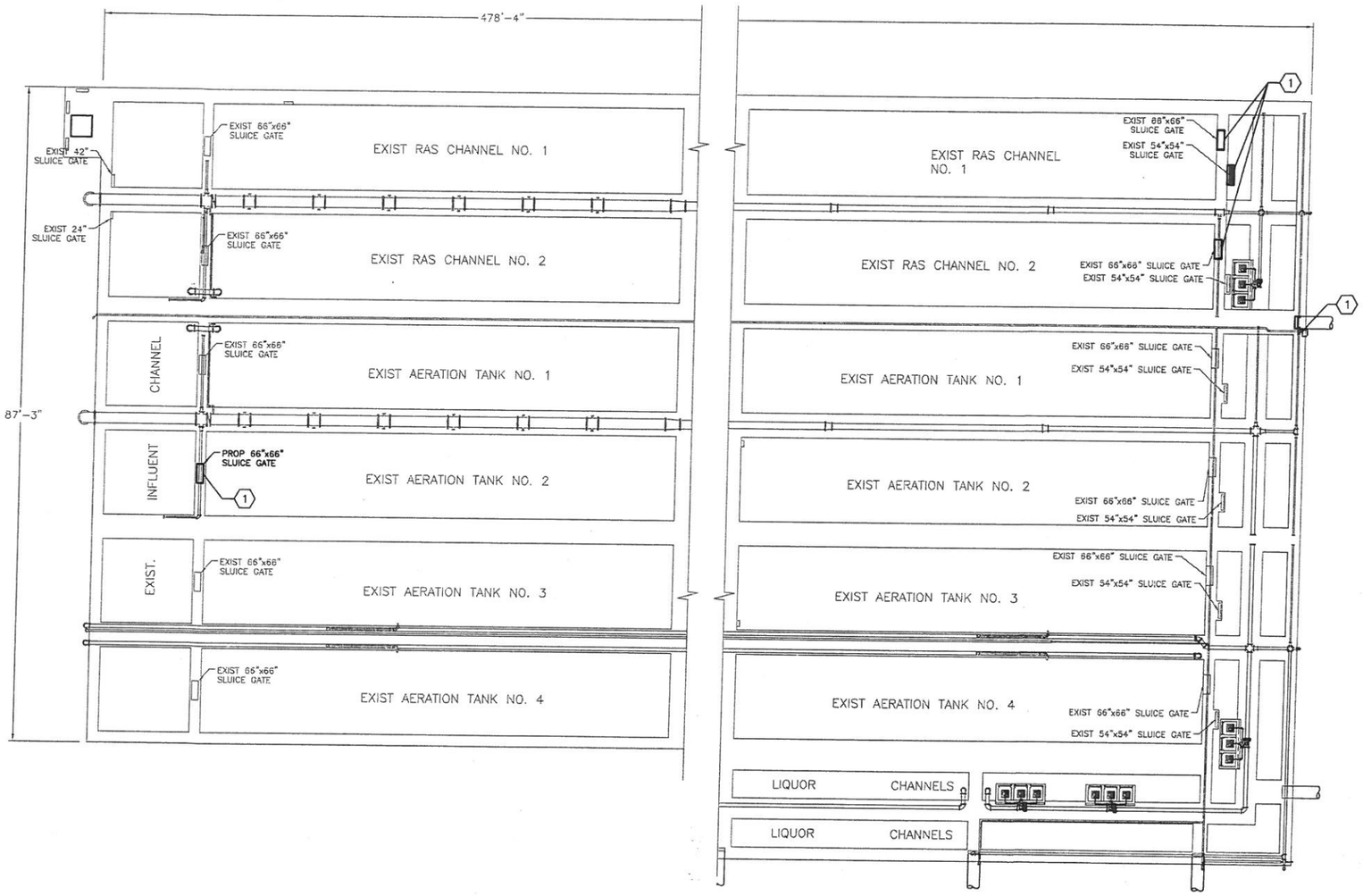

AERATION TANKS POWER
PLAN
1" = 20'

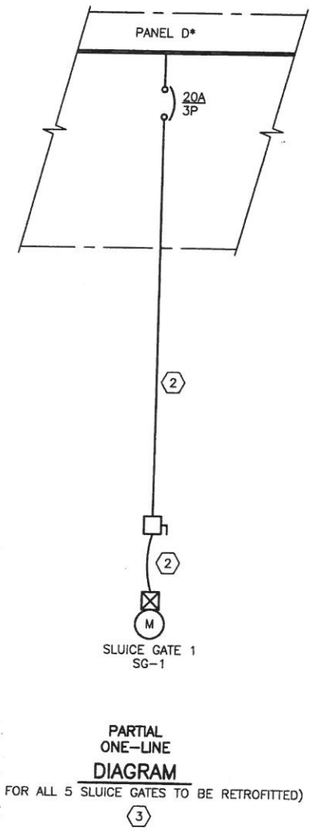

PARTIAL
ONE-LINE
DIAGRAM
(TYP. FOR ALL 5 SLUICE GATES TO BE RETROFITTED)
3

NOTES:

1. RECONNECT EACH SLUICE GATE OPERATOR TO IT EXISTING CIRCUIT IN ONE OF THE PANELS D, D1 D2 OR D3.
2. REPLACE ALL EXISTING WIRES, SURFACE CONDUIT AND DISCONNECT SWITCH WITH NEW. USE LIQUID TIGHT FLEX CONDUIT BETWEEN THE DISCONNECT SWITCH AND THE GATE ACTUATOR.
3. REFER TO SHEET EC-06 FOR PANEL "D", "D1", "D2", AND "D3" SCHEDULES.

DATE	REVISION	BY

GAI
Gupta & Associates, Inc.
consulting engineering
Registration No. F-2593
7322 Southwest Freeway Suite 410
Houston, Texas 77074
Tel: 713-636-2936
Fax: 713-636-2987
email: *hforouzan@gaiconsulting.com*

H. A. FOROUZAN
77748
REGISTERED PROFESSIONAL ENGINEER
STATE OF TEXAS
03/15/2013

LJA Engineering Inc.
2929 Briarpark Drive
Suite 600
Houston, Texas 77042
Phone 713.953.5200
Fax 713.953.5026
FRN - F-1386

SURVEYED BY: AMANI ENG. | FB NO.: P-5679

CITY OF HOUSTON
DEPARTMENT OF PUBLIC WORKS AND ENGINEERING

ALMEDA SIMS WWTP & SPF IMPROVEMENTS PACKAGE-3

ELECTRICAL
AERATION TANKS POWER PLAN AND PARTIAL ONE-LINE DIAGRAM

WBS NUMBER	R-000298-0008-4
DRAWING SCALE	1" = 20'
CITY OF HOUSTON, PM	IRAJ RANJBAR, P.E.
SHEET NO.	78 OF 117

PUBLIC WORKS AND ENGINEERING
50431
HOUSTON, TEXAS

DWG: EC-10

Z:\H814_Houston Almeda Sims WWTP Improvement\Drawings\Electrical\Working\EC-10.dwg

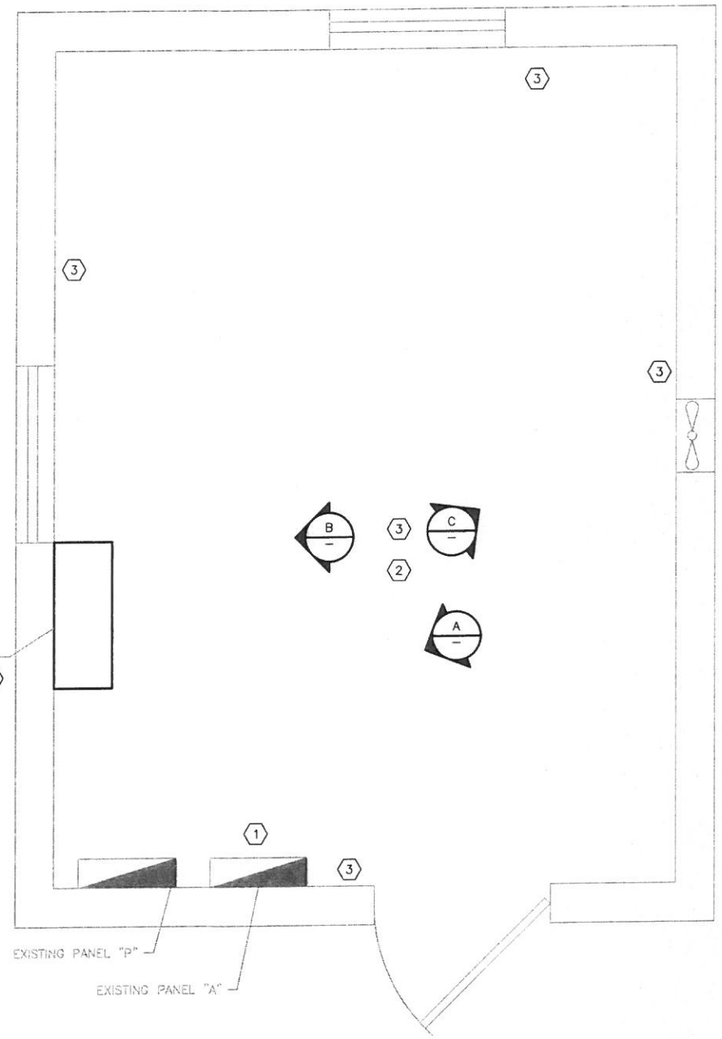

CONTROL BUILDING
PLAN
3/4" = 1'-0"

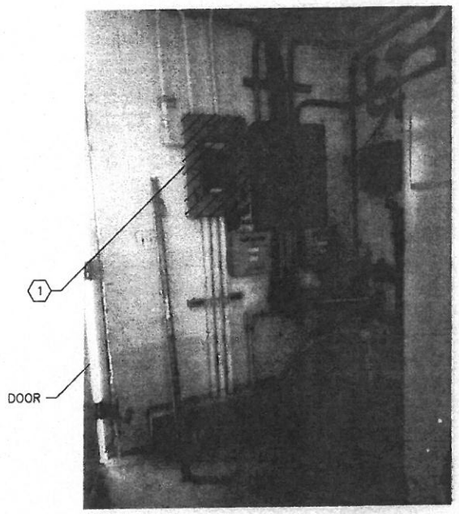

CONTROL BUILDING MODIFICATION
PHOTOGRAPH A – 3

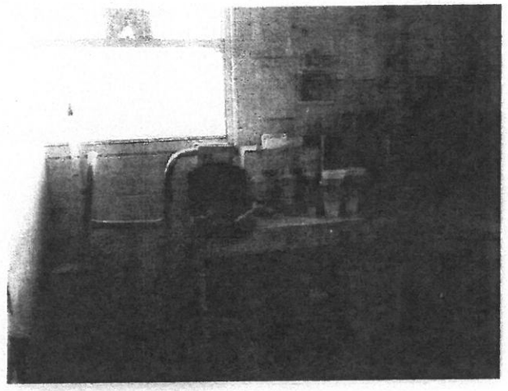

CONTROL BUILDING MODIFICATION
PHOTOGRAPH B – 3

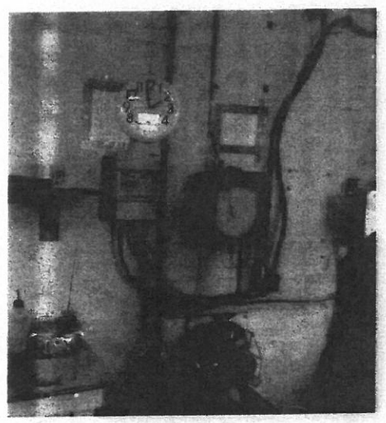

CONTROL BUILDING MODIFICATION
PHOTOGRAPH C – 3

PANELBOARD: A 1			BUS: 100A		MAINS: 60A/2P			
SERVICE: 120/240V			RATING: 10KA		LOCATION: DICHLORINATION BUILDING			
MOUNTING: SURFACE – NEMA 1			FEED: TOP					
CKT #	BRKR SIZE	WIRE SIZE	LOAD	LOAD	WIRE SIZE	BRKR SIZE	CKT #	
1	20/1	*	EXISTING LOAD 4	EXISTING LOAD 4	*	20/1	2	
3	20/1	*	EXISTING LOAD 4	EXISTING LOAD 4	*	20/1	4	
5	20/1	*	EXISTING LOAD 4	EXISTING LOAD 4	*	20/1	6	
7	20/1	*	EXISTING LOAD 4	EXISTING LOAD 4	*	20/1	8	
9	20/1	*	EXISTING LOAD 4	EXISTING LOAD 4	*	20/1	10	
11	20/1	*	EXISTING LOAD 4	EXISTING LOAD 4	*	20/1	12	
13	–	–	SPACE	DICHLORINATION PLC 5	12	20/1	14	
15	–	–	SPACE	NETWORK & CONTROLS 5	12	20/1	16	
17	–	–	SPACE	PLC RECEPTACLES & LIGHTS 5	12	20/1	18	

* = EXISTING TO BE RECONNECTED TO EXISTING LOADS

PANEL REPLACEMENT AND RECONNECTION OF EXISTING LOADS (PANEL "A") WITH MINOR CHANGES

NOTES:

1. PROVIDE NEW PANEL "A" TO REPLACE EXISTING IN THE SAME LOCATION. RECONNECT ALL EXISTING CIRCUITS TO NEW PANEL.
2. PROVIDE TYPE "A" LIGHT FIXTURES TO REPLACE EXISTING LIGHTS. REFER TO LIGHT FIXTURE SCHEDULE ON SHEET EA-04.
3. PROVIDE NEW J-BOXES, WIREWAY, CONDUITS, WIRES, RECEPTACLES, LIGHT SWITCHES AS NEEDED TO REPLACE EXISTING.
4. CONTRACTOR SHALL IDENTIFY EACH LOAD AND LABEL ON A NEW PANEL DIRECTORY.
5. RUN 2#12, #12G, 3/4"C TO DICHLORINATION PLC.
6. THE CONTRACTOR SHALL DEMOLISH THE EXISTING PLC AND ASSOCIATED ENCLOSURE. THE EXISTING, NEW OR REPLACED SIGNAL WIRES SHALL BE RECONNECTED.
7. INSTALL A NEW PLC AND ENCLOSURE. RECONNECT THE WIRES TO THE TERMINATIONS AS PER I&C SHOP DRAWINGS.
8. COORDINATE ALL WORK WITH THE INSTRUMENTATION CONTRACTOR.

DATE	REVISION	BY

GAI
Gupta & Associates, Inc.
consulting engineering
Registration No. F-2593
7322 Southwest Freeway Suite 410
Houston, Texas 77074
Tel. 713-636-2936
Fax. 713-636-2987
email hforouzan@gaiconsulting.com

STATE OF TEXAS
H. A. FOROUZAN
77748
REGISTERED
PROFESSIONAL ENGINEER
03/15/2013

LJA Engineering Inc.
2929 Briarpark Drive
Suite 600
Houston, Texas 77042
Phone 713.953.5200
Fax 713.953.5026
FRN - F-1386

SURVEYED BY: AMANI ENG. | FB NO.: P-5679

CITY OF HOUSTON
DEPARTMENT OF PUBLIC WORKS AND ENGINEERING

ALMEDA SIMS WWTP & SPF IMPROVEMENTS PACKAGE-3

ELECTRICAL
CONTROL BUILDING
MODIFICATION POWER PLAN

WBS NUMBER	R-000298-0008-4
DRAWING SCALE	1/2" = 1'-0"
CITY OF HOUSTON, PM	IRAJ RANJBAR, P.E.
SHEET NO.	79 OF 117

DWG: EC-11

PUBLIC WORKS & ENGINEERING
50431
TEXAS

Z:\Y814_Houston Almeda Sims WWTP improvement\Drawings\Electrical\Working\EC-11.dwg

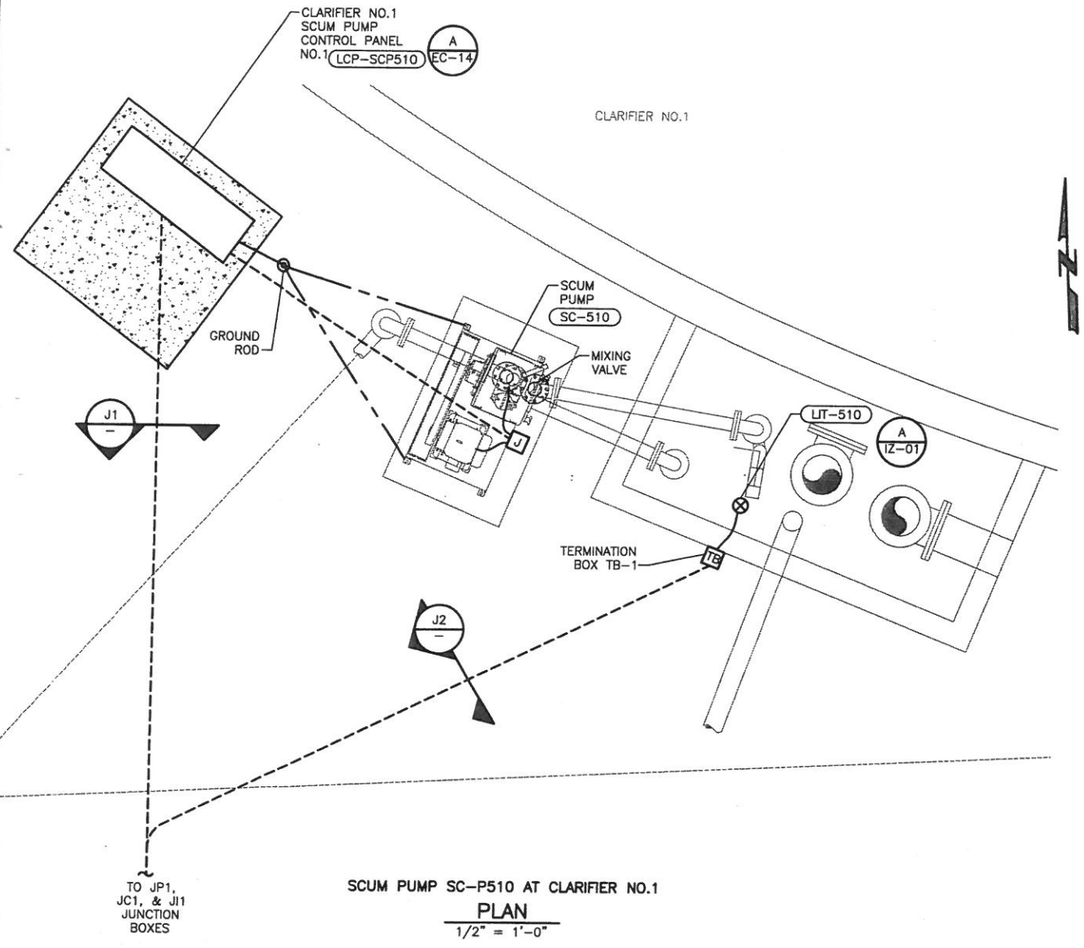

SCUM PUMP SC-P510 AT CLARIFIER NO.1

PLAN

1/2" = 1'-0"

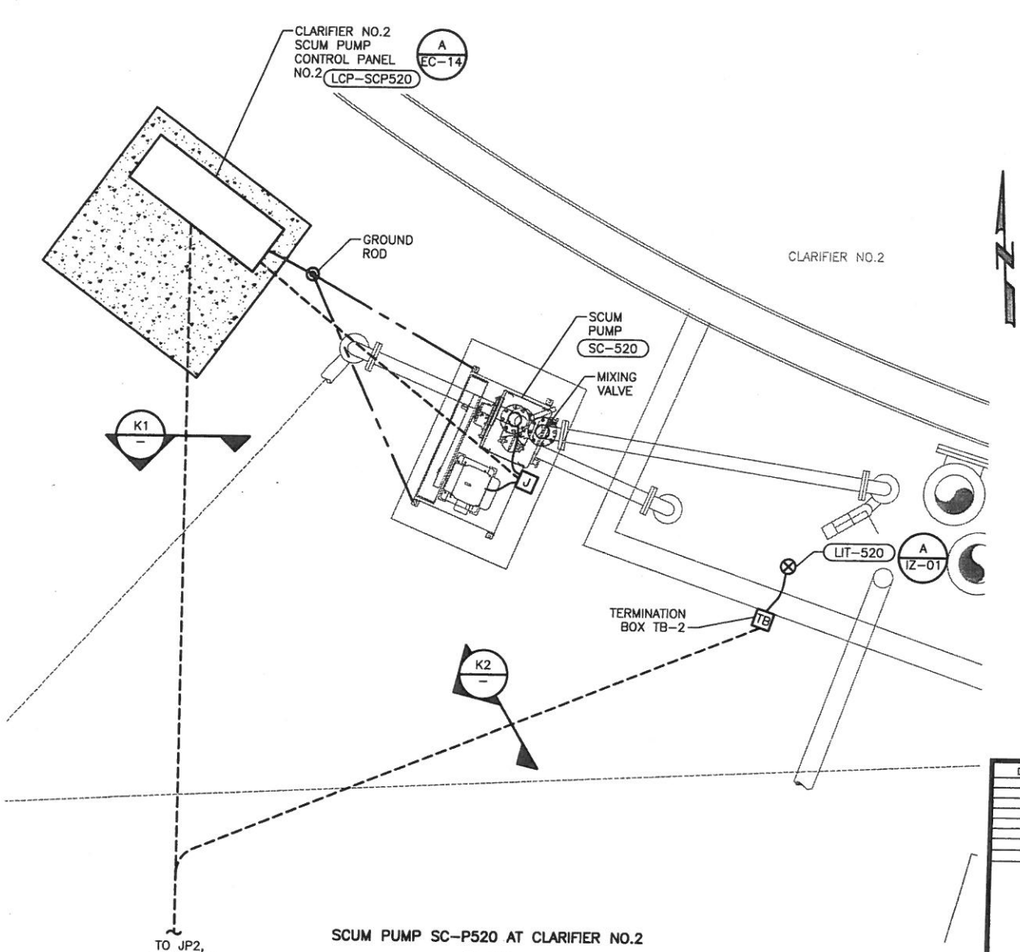

SCUM PUMP SC-P520 AT CLARIFIER NO.2

PLAN

1/2" = 1'-0"

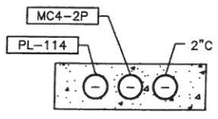

DUCTBANK

SECTION J1

NTS

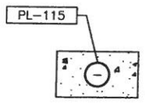

DUCTBANK

SECTION J2

NTS

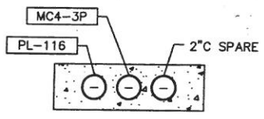

DUCTBANK

SECTION K1

NTS

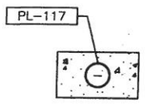

DUCTBANK

SECTION K2

NTS

DATE	REVISION	BY

GAI
Gupta & Associates, Inc.
consulting engineering
Registration No. F-2593
7322 Southwest Freeway Suite 410
Houston, Texas 77074
Tel: 713-636-2936
Fax: 713-636-2987
email:hforouzan@gaiconsulting.com

STATE OF TEXAS
H. A. FOROUZAN
77748
REGISTERED PROFESSIONAL ENGINEER
03/15/2013

LJA Engineering Inc.
2929 Briarpark Drive
Suite 600
Houston, Texas 77042
Phone 713.953.5200
Fax 713.953.5026
FRN - F-1386

SURVEYED BY: AMANI ENG. | FB NO.: P-5679

CITY OF HOUSTON

DEPARTMENT OF PUBLIC WORKS AND ENGINEERING

ALMEDA SIMS WWTP & SPF IMPROVEMENTS PACKAGE-3

ELECTRICAL

SCUM PUMPS SC-P510 & SC-P520 ENLARGED ELECTRICAL PLANS

WBS NUMBER	R-000298-0008-4
DRAWING SCALE	NTS
CITY OF HOUSTON, PM	IRAJ RANJBAR, P.E.
SHEET NO.	80 OF 117

PUBLIC WORKS & ENGINEERING
50431
HOUSTON, TEXAS

DWG: EC-12

Z:\H814_Houston Almeda Sims WWTP Improvement\Drawings\Electrical\Working\EC-12.dwg

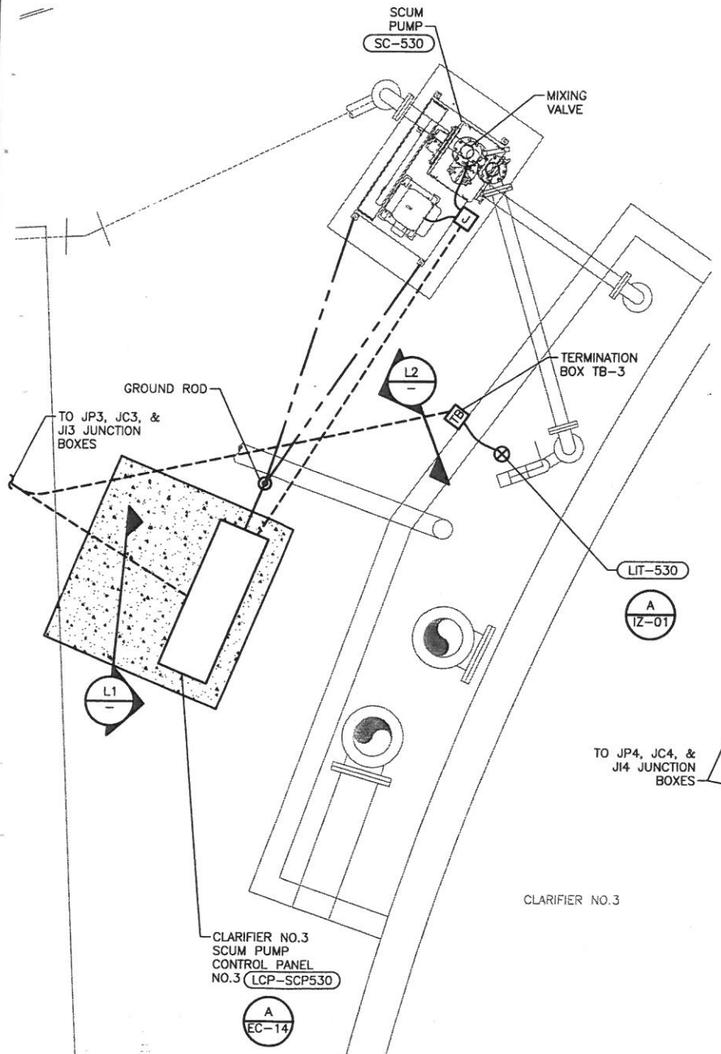

SCUM PUMP SC-P530 AT CLARIFIER NO.3

PLAN

1/2" = 1'-0"

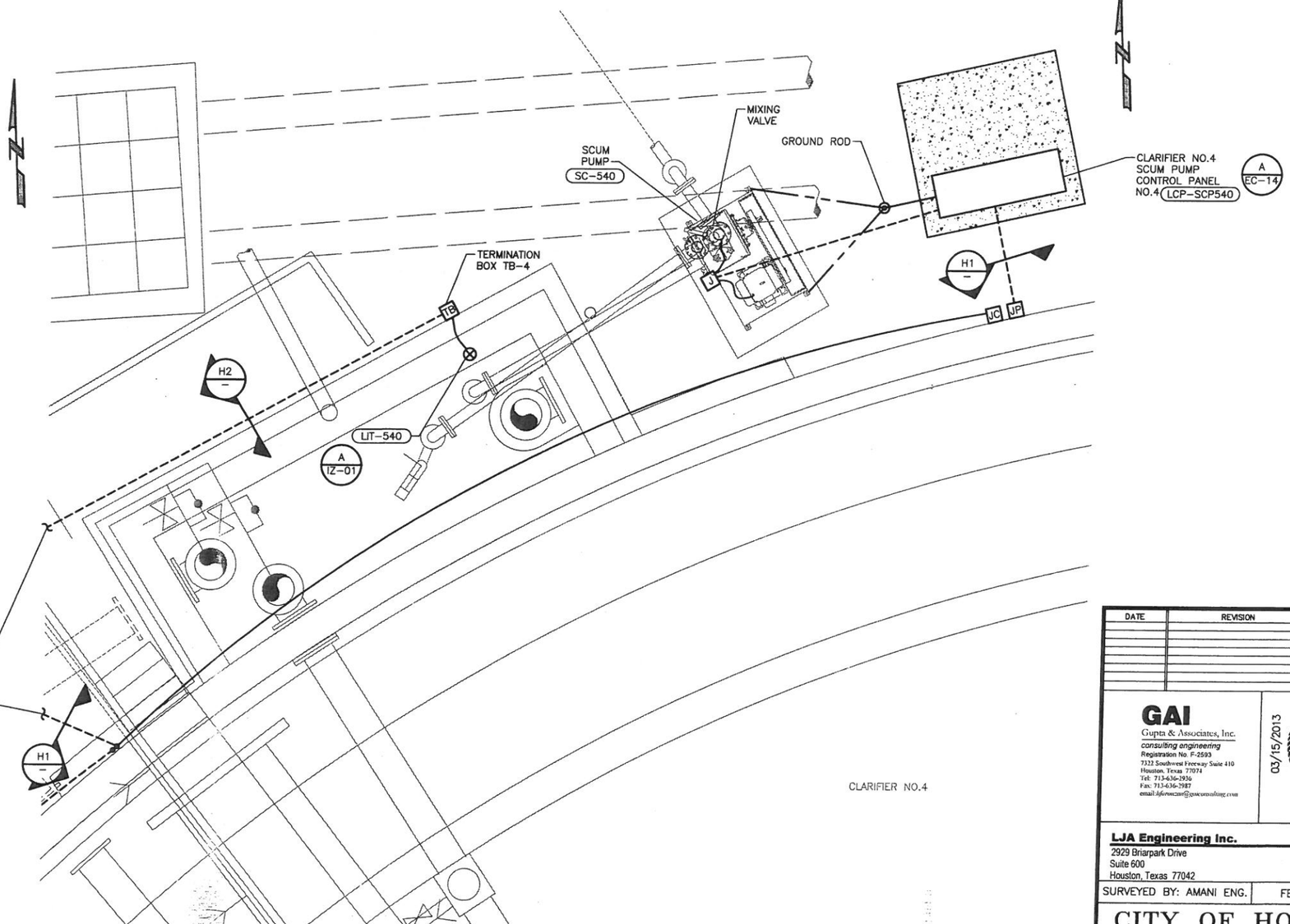

SCUM PUMP SC-P540 AT CLARIFIER NO.4

PLAN

1/2" = 1'-0"

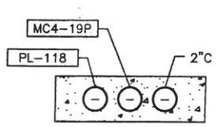

DUCTBANK SECTION L1

NTS

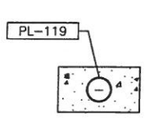

DUCTBANK SECTION L2

NTS

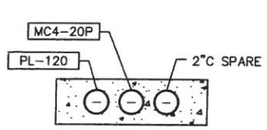

DUCTBANK SECTION H1

NTS

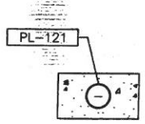

DUCTBANK SECTION H2

NTS

DATE	REVISION	BY

GAI
Gupta & Associates, Inc.
consulting engineering
Registration No. F-2593
7322 Southwest Freeway Suite 410
Houston, Texas 77074
Tel: 713-636-1936
Fax: 713-636-1987
email:hforouzan@gaiconsulting.com

03/15/2013

STATE OF TEXAS
H. A. FOROUZAN
77748
REGISTERED PROFESSIONAL ENGINEER

LJA Engineering Inc.
2929 Briarpark Drive
Suite 600
Houston, Texas 77042
Phone 713.953.5200
Fax 713.953.5026
FRN - F-1386

SURVEYED BY: AMANI ENG. | FB NO.: P-5679

CITY OF HOUSTON
DEPARTMENT OF PUBLIC WORKS AND ENGINEERING

ALMEDA SIMS WWTP & SPF IMPROVEMENTS PACKAGE-3

ELECTRICAL
SCUM PUMPS SC-P530 & SC-P540 ENLARGED PLANS

WBS NUMBER	R-000298-0008-4
DRAWING SCALE	NTS
CITY OF HOUSTON, PM.	IRAJ RANJBAR, P.E.
SHEET NO.	81 OF 117

PUBLIC WORKS AND ENGINEERING
50431
HOUSTON, TEXAS

DWG: EC-13

81

Z:\1814_Houston Almeda Sims WWTP Improvement\Drawings\Electrical\Working\EC-13.dwg

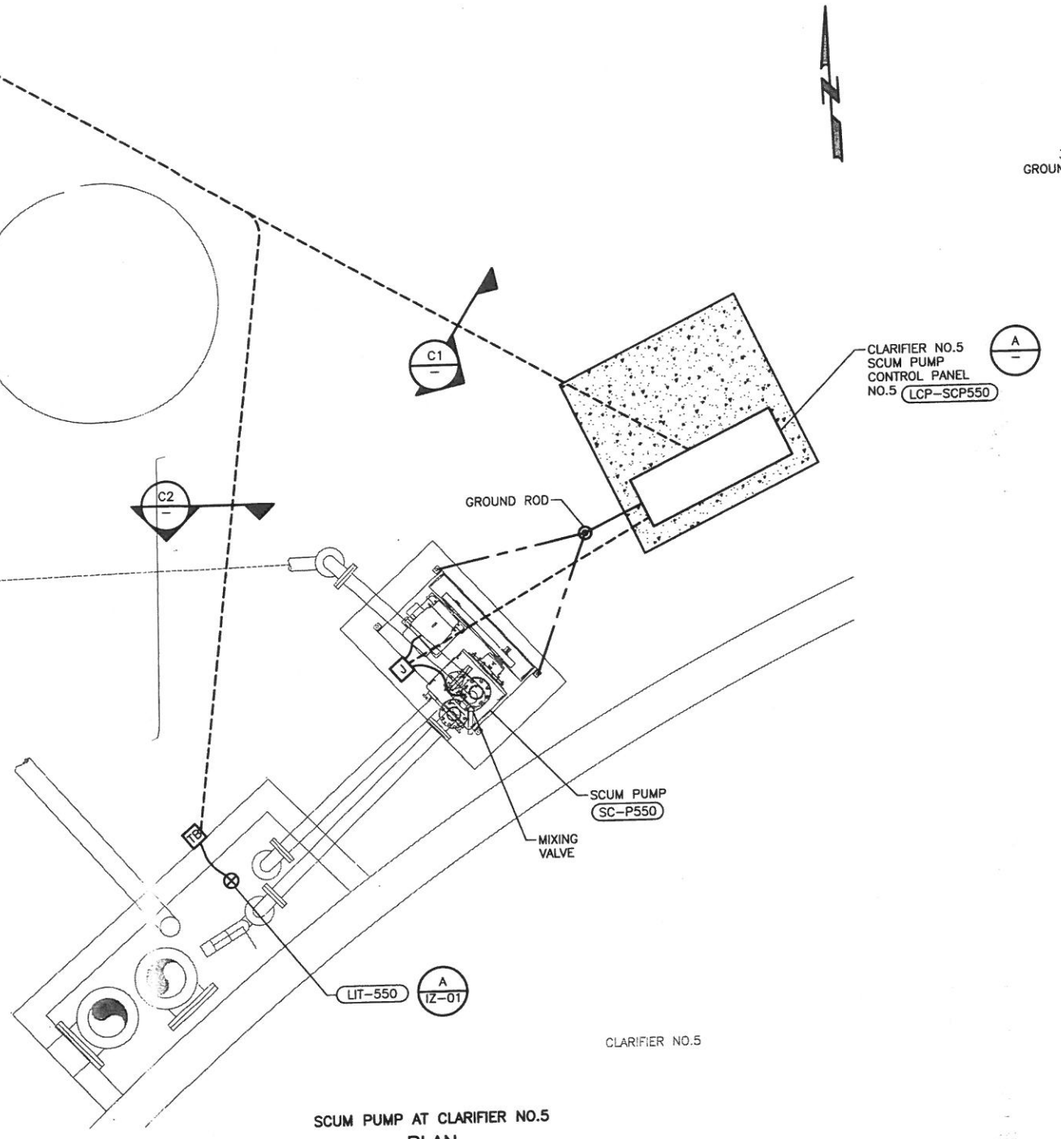

SCUM PUMP AT CLARIFIER NO.5

PLAN

1/2" = 1'-0"

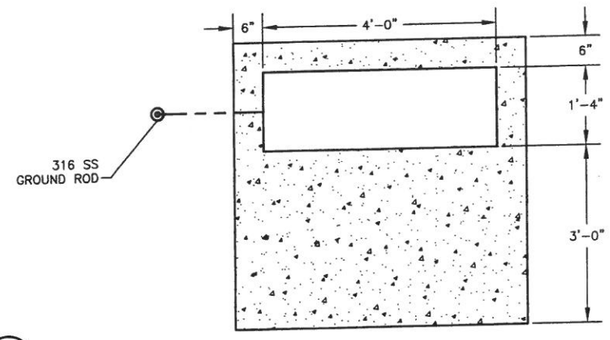

TOP VIEW

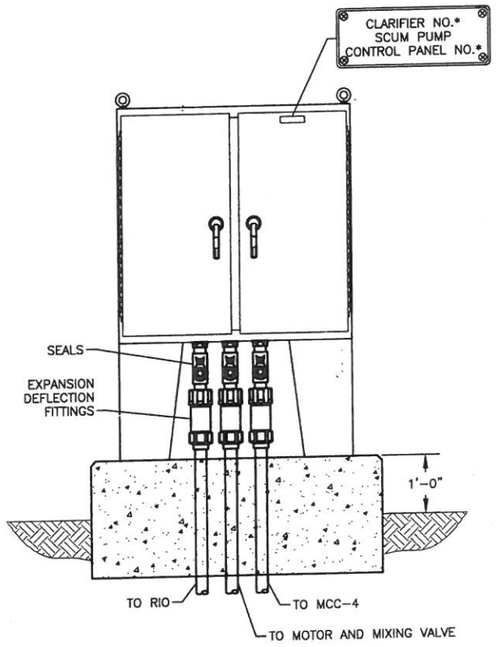

SCUM PUMP CONTROL PANEL

DETAIL A

NTS

(TYP. FOR 5)

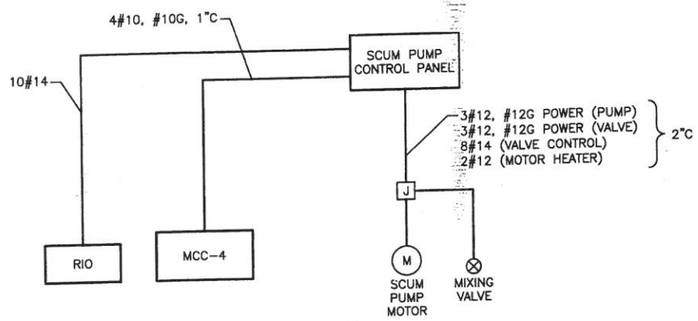

SCUM PUMP RISER

DIAGRAM

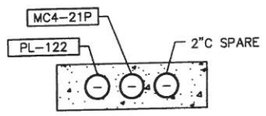

DUCTBANK

SECTION C1

NTS

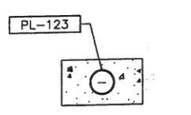

DUCTBANK

SECTION C2

NTS

DATE	REVISION	BY

GAI
Gupta & Associates, Inc.
consulting engineering
Registration No. F-2593
7322 Southwest Freeway Suite 410
Houston, Texas 77074
Tel: 713-636-2936
Fax: 713-636-2987
email: hforouzan@gaiconsulting.com

STATE OF TEXAS
H. A. FOROUZAN
77748
REGISTERED PROFESSIONAL ENGINEER
03/15/2013

LJA Engineering Inc.
2929 Briarpark Drive
Suite 600
Houston, Texas 77042
Phone 713.953.5200
Fax 713.953.5026
FRN - F-1386

SURVEYED BY: AMANI ENG. | FB NO.: P-5679

CITY OF HOUSTON

DEPARTMENT OF PUBLIC WORKS AND ENGINEERING

ALMEDA SIMS WWTP & SPF IMPROVEMENTS PACKAGE-3

ELECTRICAL
SCUM PUMP SC-P550
ENLARGED PLAN AND DETAILS

WBS NUMBER	R-000298-0008-4
DRAWING SCALE	NTS
CITY OF HOUSTON, PM	IRAJ RANJBAR, P.E.
SHEET NO.	82 OF 117

DWG: EC-14

50431

Z:\H814_Houston Almeda Sims WWTP Improvement\Drawings\Electrical\Working\EC-14.dwg

82

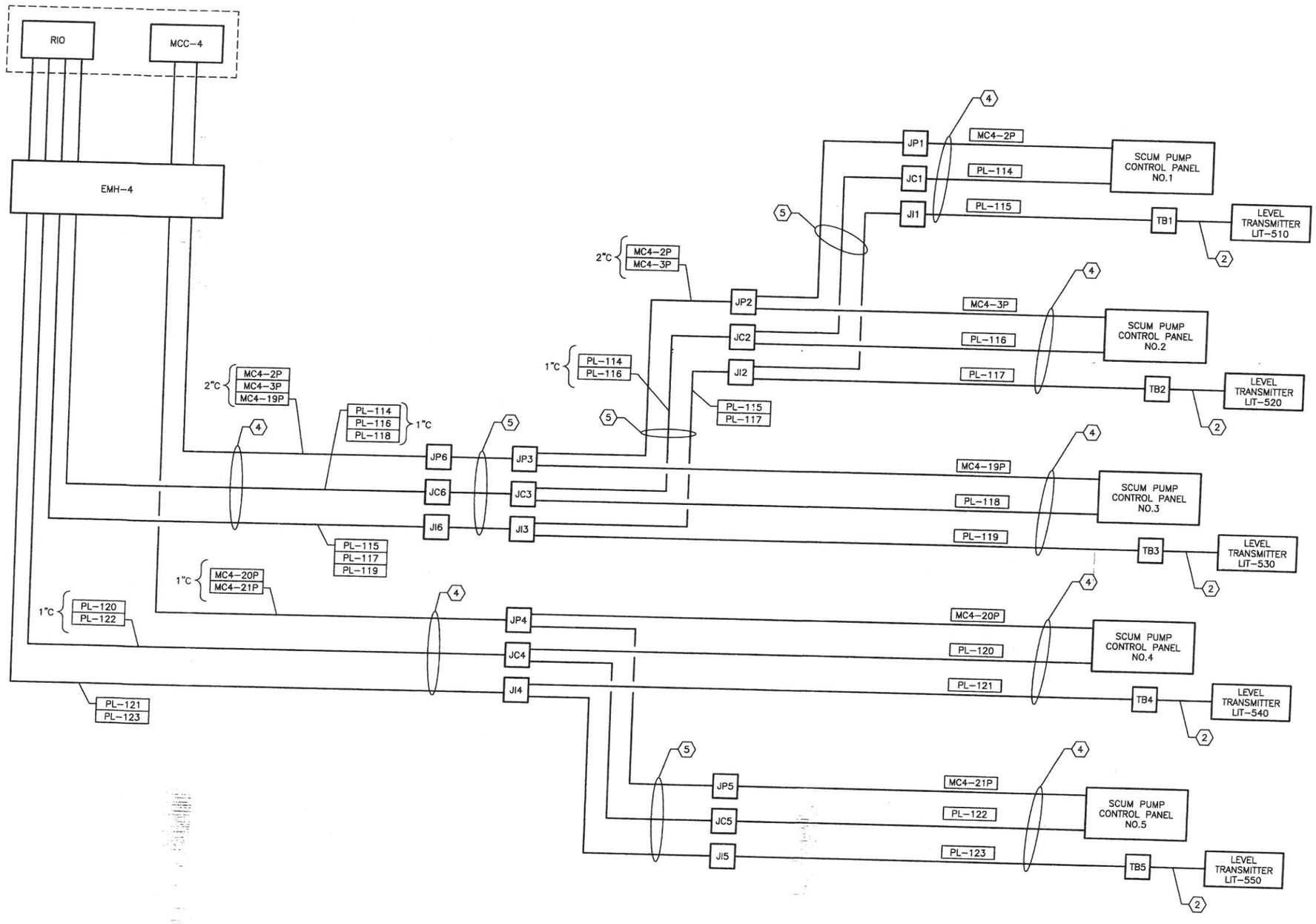

SCUM PUMPS RISER DIAGRAM (1)

NOTES:

1. REFER TO ONE-LINE DIAGRAM ON SHEET EC-18.
2. MANUFACTURER FURNISHED CABLE.
3. REFER TO SHEET E-03 AND EC-04 FOR LOCATIONS OF EQUIPMENT AND CONDUITS.
4. UNDERGROUND DUCTBANK.
5. WALL MOUNTED EXPOSED CONDUITS.

DATE	REVISION	BY

GAI
Gupta & Associates, Inc.
consulting engineering
Registration No. F-2593
7322 Southwest Freeway Suite 410
Houston, Texas 77074
Tel: 713-636-2936
Fax: 713-636-2987
email: hforouzan@gaiconsulting.com

STATE OF TEXAS
H. A. FOROUZAN
77748
REGISTERED PROFESSIONAL ENGINEER
03/15/2013

LJA Engineering Inc.
2929 Briarpark Drive
Suite 600
Houston, Texas 77042
Phone 713.953.5200
Fax 713.953.5026
FRN - F-1386

SURVEYED BY: AMANI ENG. | FB NO.: P-5679

CITY OF HOUSTON
DEPARTMENT OF PUBLIC WORKS AND ENGINEERING

ALMEDA SIMS WWTP & SPF IMPROVEMENTS PACKAGE-3

ELECTRICAL
SCUM PUMPS
RISER DIAGRAM

WBS NUMBER	R-000298-0008-4
DRAWING SCALE	NTS
CITY OF HOUSTON, PM	IRAJ RANJBAR, P.E.
SHEET NO.	83 OF 117

DWG: EC-15

Z:\H814_Houston Almeda Sims WWTP Improvement\Drawings\Electrical\Working\EC-15.dwg

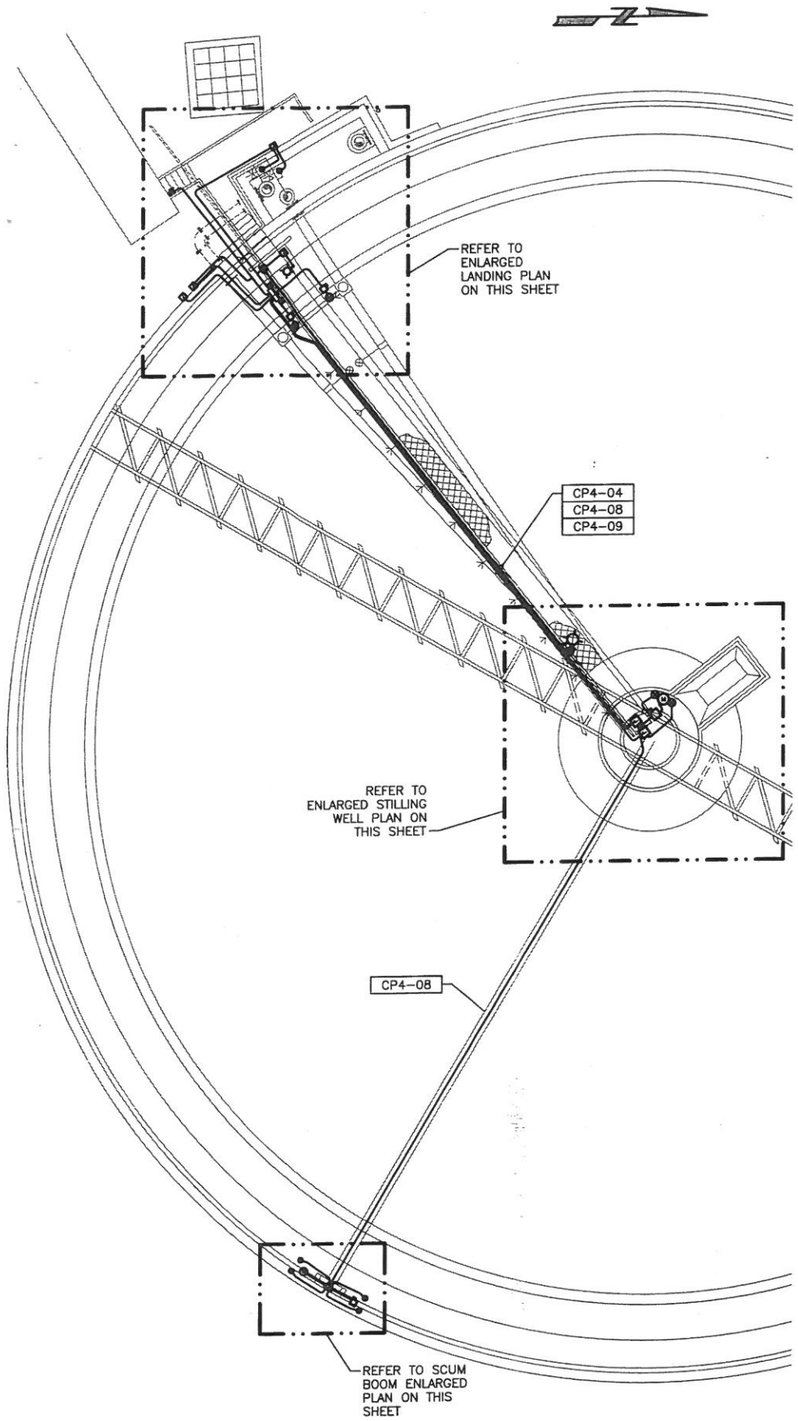

CLARIFIER NO.4 MODIFICATIONS

PLAN 1

1/8" = 1'-0"

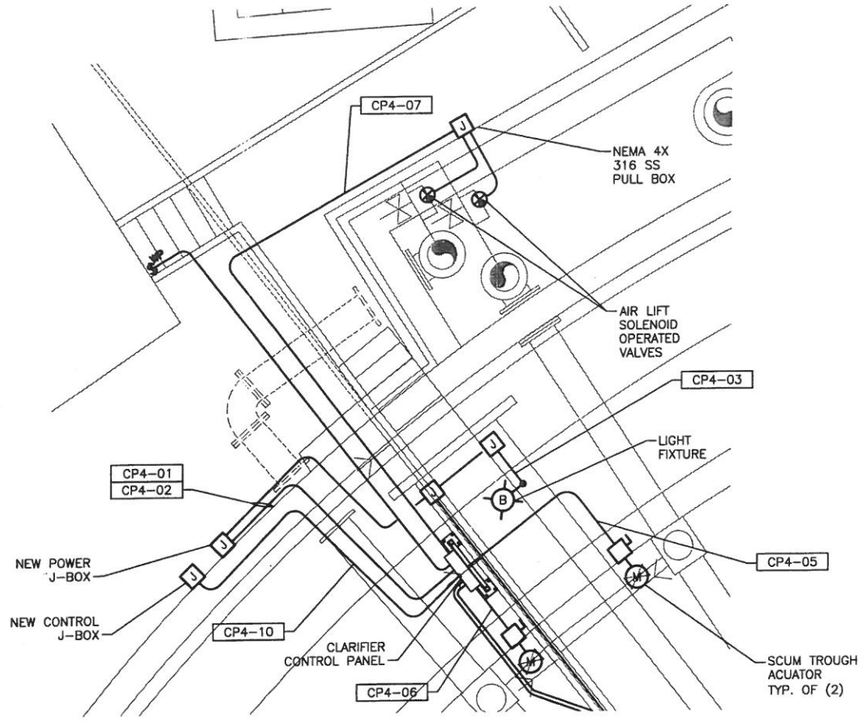

ENLARGED LANDING

PLAN

3/8" = 1'-0"

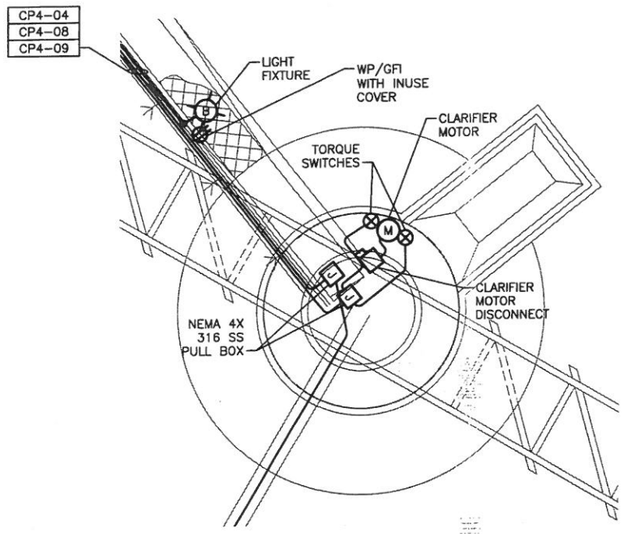

ENLARGED STILING WELL

PLAN

1/4" = 1'-0"

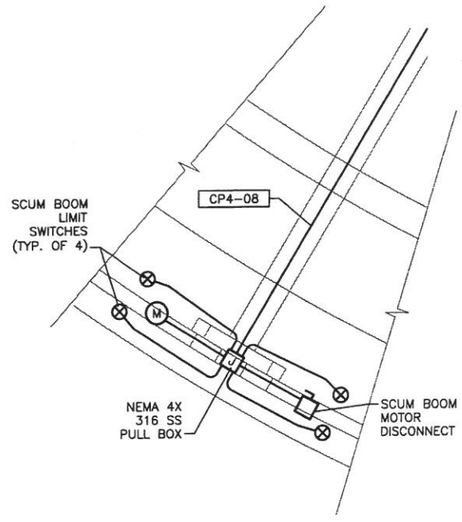

SCUM BOOM ENLARGED

PLAN

3/8" = 1'-0"

NOTES:

1. REFER TO RISER DIAGRAM ON SHEET EC-11 FOR ADDITIONAL INFORMATION.

DATE	REVISION	BY

GAI
Gupta & Associates, Inc.
consulting engineering
Registration No. F-2593
7322 Southwest Freeway Suite 410
Houston, Texas 77074
Tel: 713-636-2936
Fax: 713-636-2987
email:hforouzan@gaiconsulting.com

STATE OF TEXAS
H. A. FOROUZAN
77748
REGISTERED PROFESSIONAL ENGINEER
03/15/2013

LJA Engineering Inc.
2929 Briarpark Drive
Suite 600
Houston, Texas 77042
Phone 713.953.5200
Fax 713.953.5026
FRN - F-1386

SURVEYED BY: AMANI ENG. | FB NO.: P-5679

CITY OF HOUSTON

DEPARTMENT OF PUBLIC WORKS AND ENGINEERING

ALMEDA SIMS WWTP & SPF IMPROVEMENTS PACKAGE-3

CLARIFIER CL-540 MODIFICATION PLANS

WBS NUMBER	R-000298-0008-4
DRAWING SCALE	AS SHOWN
CITY OF HOUSTON, PM	IRAJ RANJBAR, P.E.
SHEET NO.	84 OF 117

PUBLIC WORKS AND ENGINEERING
50431
CITY OF HOUSTON, TEXAS

DWG: EC-16

2:\V8114_Houston Almeda Sims WWTP improvement\Drawings\Electrical\Working\EC-16.dwg

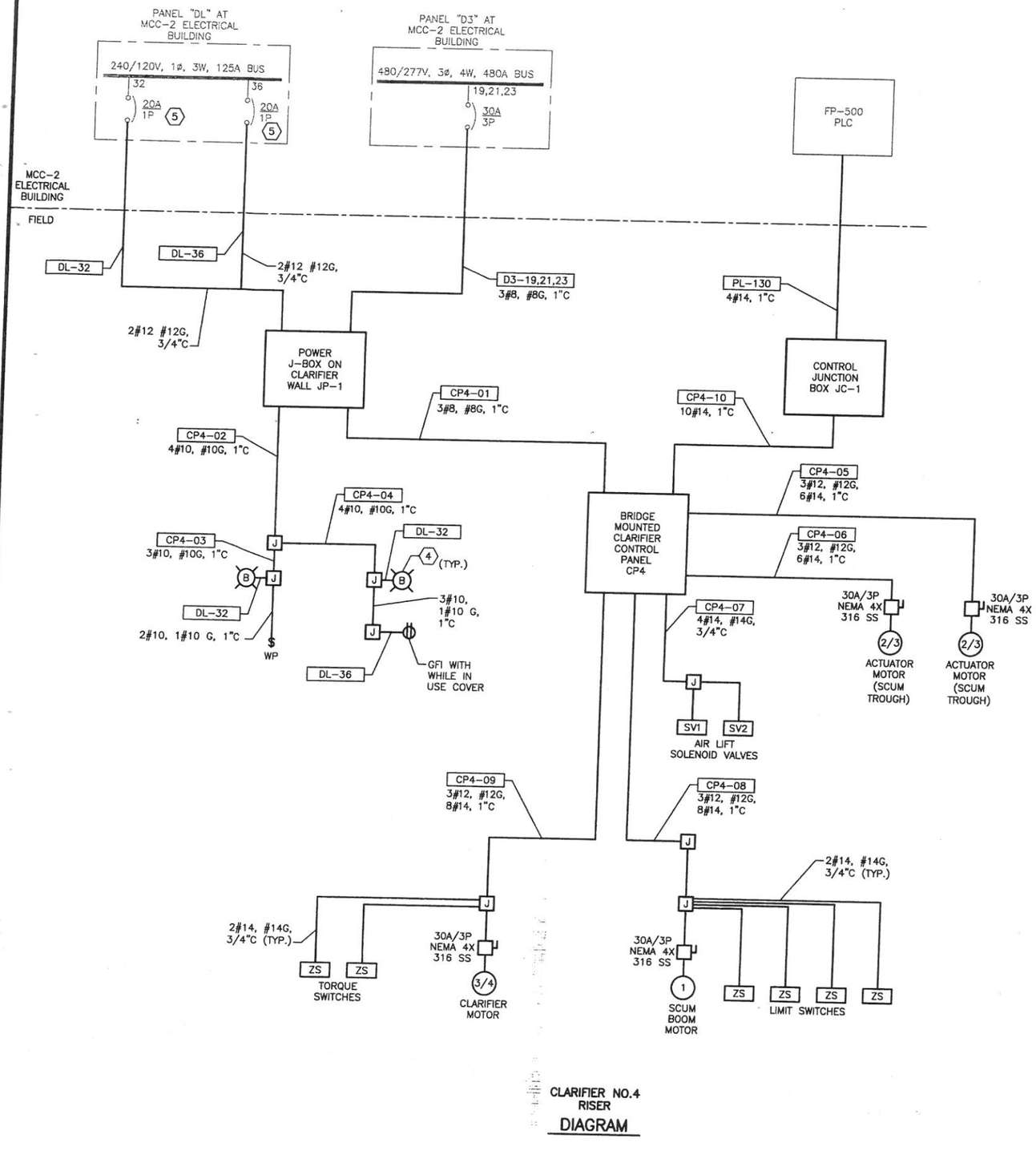

CLARIFIER NO.4 RISER DIAGRAM

NOTES:

1. REFER TO ONE-LINE DIAGRAM ON SHEET EC-04.
2. REFER TO INTERFACE DIAGRAM ON SHEET EC-13.
3. REFER TO SHEET E-03 FOR ELECTRICAL CABLE CODES.
4. REFER TO SHEET EA-04 FOR LIGHT FIXTURE SCHEDULE.
5. RE-USE EXISTING BREAKER IN EXISTING PANEL "DL"

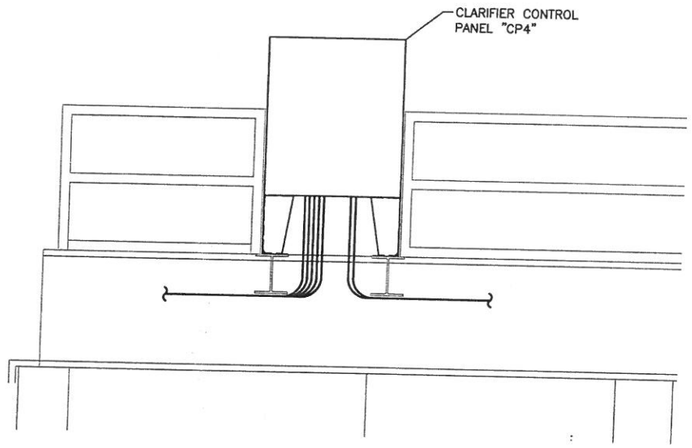

REAR VIEW OF CLARIFIER NO.4 CONTROL PANEL

DETAIL A 1/2" = 1'-0"

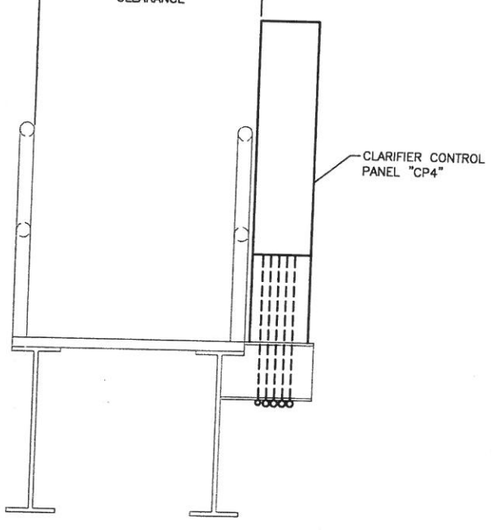

END VIEW OF CLARIFIER NO.4 CONTROL PANEL

DETAIL B 3/4" = 1'-0"

DATE	REVISION	BY

GAI
Gupta & Associates, Inc.
consulting engineering
Registration No. F-2593
7322 Southwest Freeway Suite 410
Houston, Texas 77074
Tel: 713-636-7936
Fax: 713-636-2987
email:hforouzan@gaiconsulting.com

STATE OF TEXAS
H. A. FOROUZAN
77748
REGISTERED PROFESSIONAL ENGINEER
03/15/2013

LJA Engineering Inc.
2929 Briarpark Drive
Suite 600
Houston, Texas 77042
Phone 713.953.5200
Fax 713.953.5026
FRN - F-1386

SURVEYED BY: AMANI ENG. | FB NO.: P-5679

CITY OF HOUSTON
DEPARTMENT OF PUBLIC WORKS AND ENGINEERING

ALMEDA SIMS WWTP & SPF IMPROVEMENTS PACKAGE-3
ELECTRICAL
CLARIFIER CL-540
RISER DIAGRAM AND DETAILS

WBS NUMBER	R-000298-0008-4
DRAWING SCALE	NTS
CITY OF HOUSTON, P.M.	IRAJ RANJBAR, P.E.
SHEET NO.	85 OF 117

PUBLIC WORKS AND ENGINEERING 50431 HOUSTON, TEXAS

DWG: EC-17

Z:\H814_Houston Almeda Sims WWTP Improvement\Drawings\Electrical\Working\EC-17.dwg

480V, 3ø, 3W, 600A TIN PLATED COPPER BUS 65 KAI BRACING

M — 400A 3P — FROM 480V SWITCHGEAR NEAR THE EAST LIFT STATION (ELS) REFER TO SHEET EB-04 — ELS-7P

PT(2) — POWER MONITORING PM1 (3) — CT(3)

1 — (1) — SPD

2 — 20A 3P — MC4-2P P310 — MANUFACTURER FURNISHED CONTROL PANEL — 7.5 SCUM PUMP SC-P510 (4)

3 — 20A 3P — MC4-3P P310 — MANUFACTURER FURNISHED CONTROL PANEL — 7.5 SCUM PUMP SC-P520 (4)

#	Breaker	Starter	Load
4	MCP 3P SIZE 1	MC4-4P/C P312 + P212 + C4	7.5 MIXER NO.1 M-710A (5)
5	MCP 3P SIZE 1	MC4-5P/C P312 + P212 + C4	7.5 MIXER NO.2 M-710B (5)
6	MCP 3P SIZE 1	MC4-6P/C P312 + P212 + C4	7.5 MIXER NO.3 M-710C (5)
7	MCP 3P SIZE 1	MC4-7P/C P312 + P212 + C4	7.5 MIXER NO.4 M-710D (5)
8	MCP 3P SIZE 1	MC4-8P/C P312 + P212 + C4	7.5 MIXER NO.5 M-720A (5)
9	MCP 3P SIZE 1	MC4-9P/C P312 + P212 + C4	7.5 MIXER NO.6 M-720B (5)
10	MCP 3P SIZE 1	MC4-10P/C P312 + C6	5 SKIMMER F-SKIM01 (5)
11	MCP 3P SIZE 1	MC4-11P/C P312 + P212 + C4	7.5 MIXER NO.7 M-720C (5)
12	30A 2P	10KVA XFMR TX-LA 480V, 1ø, 2W TO 240/120V, 1ø, 3W	PANEL LA REFER TO EC-22

CONTINUED BELOW LEFT

CONTINUED FROM ABOVE RIGHT

#	Breaker	Starter	Load
13	MCP 3P SIZE 1	MC4-13P/C P312 + P212 + C4	7.5 MIXER NO.8 M-720D (5)
14	MCP 3P SIZE 1	MC4-14P/C P312 + P212 + C4	7.5 MIXER NO.9 M-730A (5)
15	MCP 3P SIZE 1	MC4-15P/C P312 + P212 + C4	7.5 MIXER NO.10 M-730B (5)
16	MCP 3P SIZE 1	MC4-16P/C P312 + P212 + C4	7.5 MIXER NO.11 M-730C (5)
17	MCP 3P SIZE 1	MC4-17P/C P312 + P212 + C4	7.5 MIXER NO.12 M-730D (5)
18	MCP 3P SIZE 1		SPARE
19	20A 3P	MC4-19P P310 — MANUFACTURER FURNISHED CONTROL PANEL	7.5 SCUM PUMP SC-P530 (4)
20	20A 3P	MC4-20P P310 — MANUFACTURER FURNISHED CONTROL PANEL	7.5 SCUM PUMP SC-P540 (4)
21	20A 3P	MC4-21P P310 — MANUFACTURER FURNISHED CONTROL PANEL	7.5 SCUM PUMP SC-P550 (4)
22	MCP 3P SIZE 3	MC4-22P/C P306 + P212 + C3	30 MECHANICAL MIXER M-710 (5)
23-24			SPACE

MCC-4 ONE-LINE DIAGRAM

NOTES:

1. THIS BREAKER SHALL BE SIZED BY THE MCC MANUFACTURER.
2. REFER TO SHEET E-03 FOR ELECTRICAL CABLE CODES.
3. POWER MONITOR SHALL BE PQM, MULTILIN, OR EQUAL.
4. REFER TO SHEET EY-01 FOR SCHEMATIC DIAGRAM.
5. REFER TO SHEET EY-02 FOR SCHEMATIC DIAGRAM.

DATE	REVISION	BY

GAI
Gupta & Associates, Inc.
consulting engineering
Registration No. F-2593
7322 Southwest Freeway Suite 410
Houston, Texas 77074
Tel: 713-636-7936
Fax: 713-636-7937
email:hforouzan@gaiconsulting.com

H. A. FOROUZAN 77748 REGISTERED PROFESSIONAL ENGINEER
03/15/2013

LJA Engineering Inc.
2929 Briarpark Drive
Suite 600
Houston, Texas 77042
Phone 713.953.5200
Fax 713.953.5026
FRN - F-1386

SURVEYED BY: AMANI ENG. | FB NO.: P-5679

CITY OF HOUSTON
DEPARTMENT OF PUBLIC WORKS AND ENGINEERING

ALMEDA SIMS WWTP & SPF IMPROVEMENTS PACKAGE-3

ELECTRICAL
MCC-4 ONE-LINE DIAGRAM

WBS NUMBER	R-000298-0008-4
DRAWING SCALE	NTS
CITY OF HOUSTON, PM	IRAJ RANJBAR, P.E.
SHEET NO.	86 OF 117

PUBLIC WORKS AND ENGINEERING 50431 HOUSTON, TEXAS

DWG: EC-18

Z:\H814_Houston Almeda Sims WWTP Improvement\Drawings\Electrical\Working\EC-18.dwg

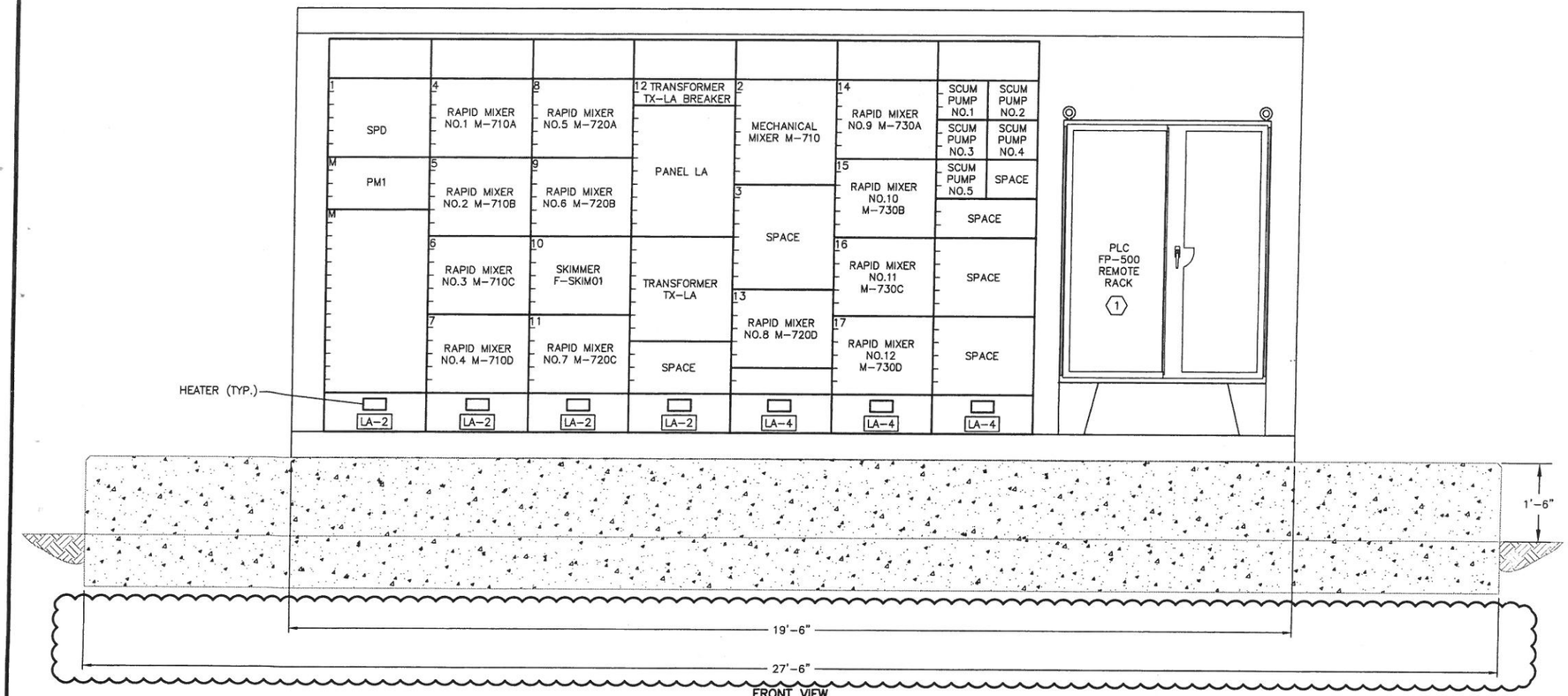

FRONT VIEW

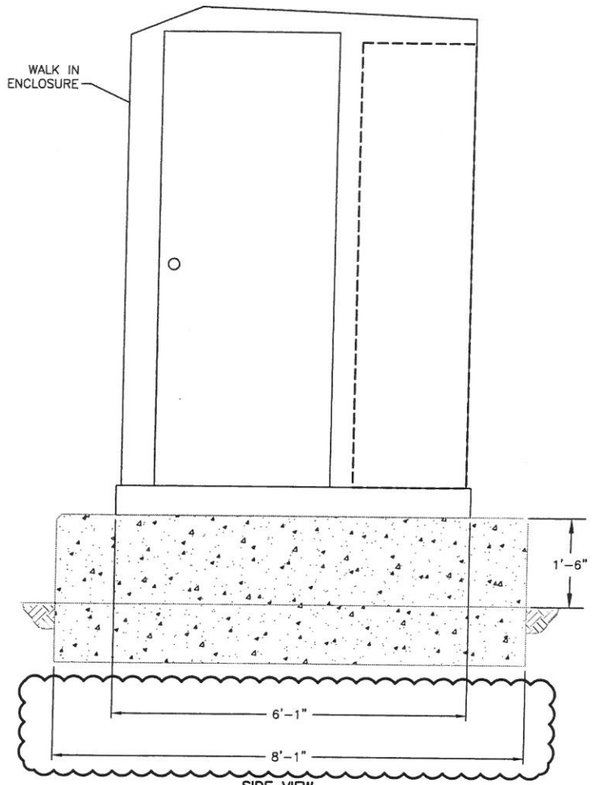

SIDE VIEW

MCC-4 ENCLOSURE
ELEVATION

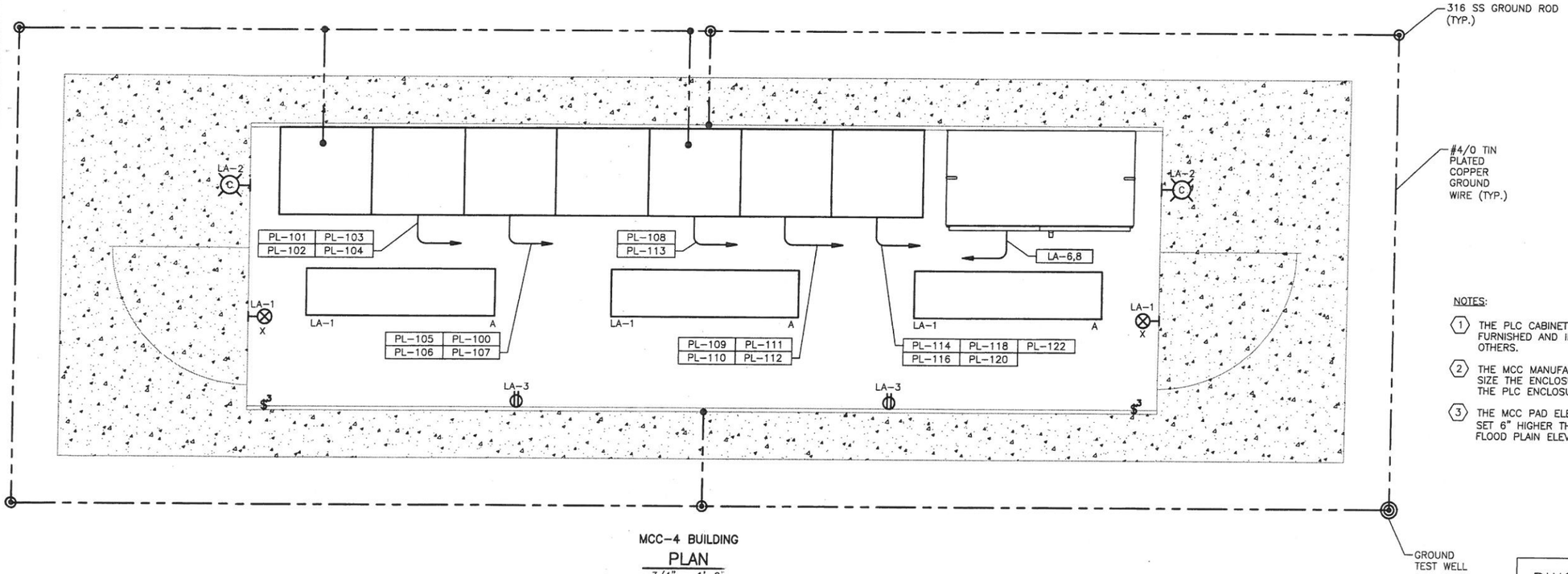

MCC-4 BUILDING
PLAN
3/4" = 1'-0"

NOTES:

1. THE PLC CABINET SHALL BE FURNISHED AND INSTALLED BY OTHERS.
2. THE MCC MANUFACTURER SHALL SIZE THE ENCLOSURE TO HOUSE THE PLC ENCLOSURE.
3. THE MCC PAD ELEVATION SHALL BE SET 6" HIGHER THAN THE 500 YEAR FLOOD PLAIN ELEVATION.

DATE	REVISION	BY
04-22-13	ADDENDUM NO.1	LS

GAI
Gupta & Associates, Inc.
consulting engineering
Registration No. F-2593
7322 Southwest Freeway, Suite 410
Houston, Texas 77074
Tel: 713-636-7936
Fax: 713-636-7987
email hforouzan@gaiconsulting.com

STATE OF TEXAS
H. A. FOROUZAN
77748
REGISTERED PROFESSIONAL ENGINEER
03/15/2013

LJA Engineering Inc.
2929 Briarpark Drive
Suite 600
Houston, Texas 77042
Phone 713.953.5200
Fax 713.953.5026
FRN - F-1386

SURVEYED BY: AMANI ENG. | FB NO.: P-5679

CITY OF HOUSTON
DEPARTMENT OF PUBLIC WORKS AND ENGINEERING

ALMEDA SIMS WWTP & SPF IMPROVEMENTS PACKAGE-3

ELECTRICAL
MCC-4 BUILDING PLAN AND ELEVATIONS

WBS NUMBER	R-000298-0008-4
DRAWING SCALE	NTS
CITY OF HOUSTON, PM	IRAJ RANJBAR, P.E.
SHEET NO.	87 OF 117

PUBLIC WORKS AND ENGINEERING
50481
HOUSTON, TEXAS

DWG: EC-19

ADDENDUM NO.1

Z:\V8114C_Houston Almeda Sims WWTP Improvement\Construction Phase\Addenda\Addendum No.1\EC-19.dwg

ORIGINAL SCALE IN INCHES

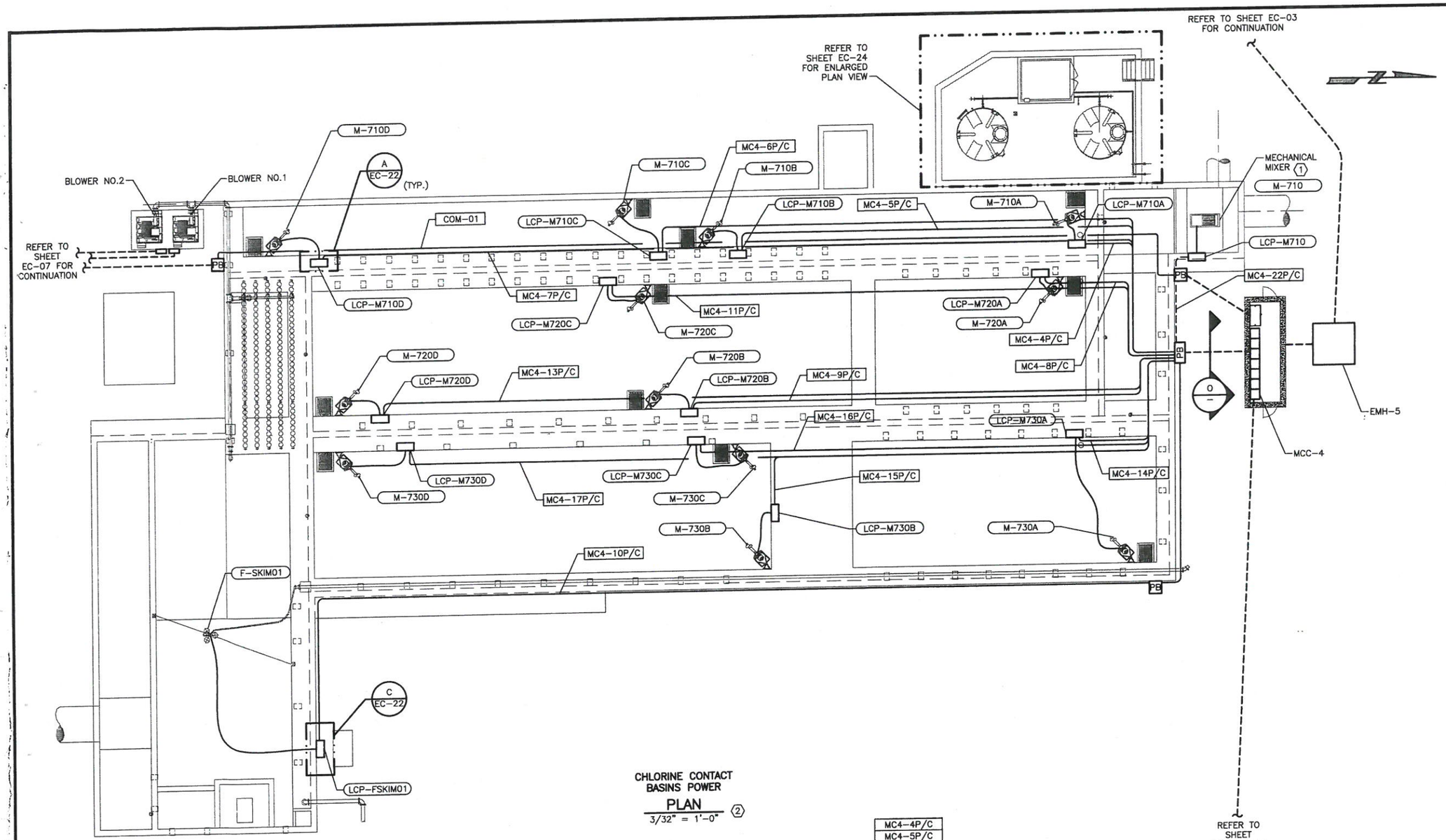

CHLORINE CONTACT BASINS POWER PLAN
3/32" = 1'-0" (2)

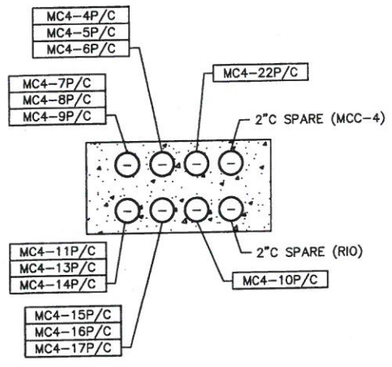

DUCTBANK SECTION 0
NTS

REFER TO SHEET EC-03 FOR CONTINUATION

GENERAL NOTES:

(1) DISCONNECT OLD MIXER AND CONNECT NEW MECHANICAL MIXER TO EXISTING CIRCUIT. DEMOLISH EXISTING SURFACE CONDUIT. RE-USE EXISTING UNDERGROUND CONDUIT. PROVIDE NEW J-BOX AND DISCONNECT. RECONNECT TO EXISTING CIRCUIT IN MCC-2 AS SHOWN ON SHEET EC-04.

(2) REFER TO RISER DIAGRAM ON SHEET EC-21 FOR ADDITIONAL INFORMATION.

DATE	REVISION	BY

GAI
Gupta & Associates, Inc.
consulting engineering
Registration No. F-2593
7322 Southwest Freeway Suite 410
Houston, Texas 77074
Tel: 713-630-7936
Fax: 713-630-7987
email: hforouzan@gaiconsulting.com

03/15/2013

STATE OF TEXAS
H. A. FOROUZAN
77748
REGISTERED PROFESSIONAL ENGINEER

LJA Engineering Inc.
2929 Briarpark Drive
Suite 600
Houston, Texas 77042
Phone 713.953.5200
Fax 713.953.5026
FRN - F-1386

SURVEYED BY: AMANI ENG. | FB NO.: P-5679

CITY OF HOUSTON
DEPARTMENT OF PUBLIC WORKS AND ENGINEERING

ALMEDA SIMS WWTP & SPF IMPROVEMENTS PACKAGE-3

ELECTRICAL CHLORINE CONTACT BASIN POWER PLAN

WBS NUMBER	R-000298-0008-4
DRAWING SCALE	NTS
CITY OF HOUSTON, PM	IRAJ RANJBAR, P.E.
SHEET NO.	88 OF 117

PUBLIC WORKS & ENGINEERING 50431 HOUSTON, TEXAS

DWG: EC-20

Z:\4814_Houston Almeda Sims WWTP Improvement\Drawings\Electrical\Working\EC-20.dwg

88

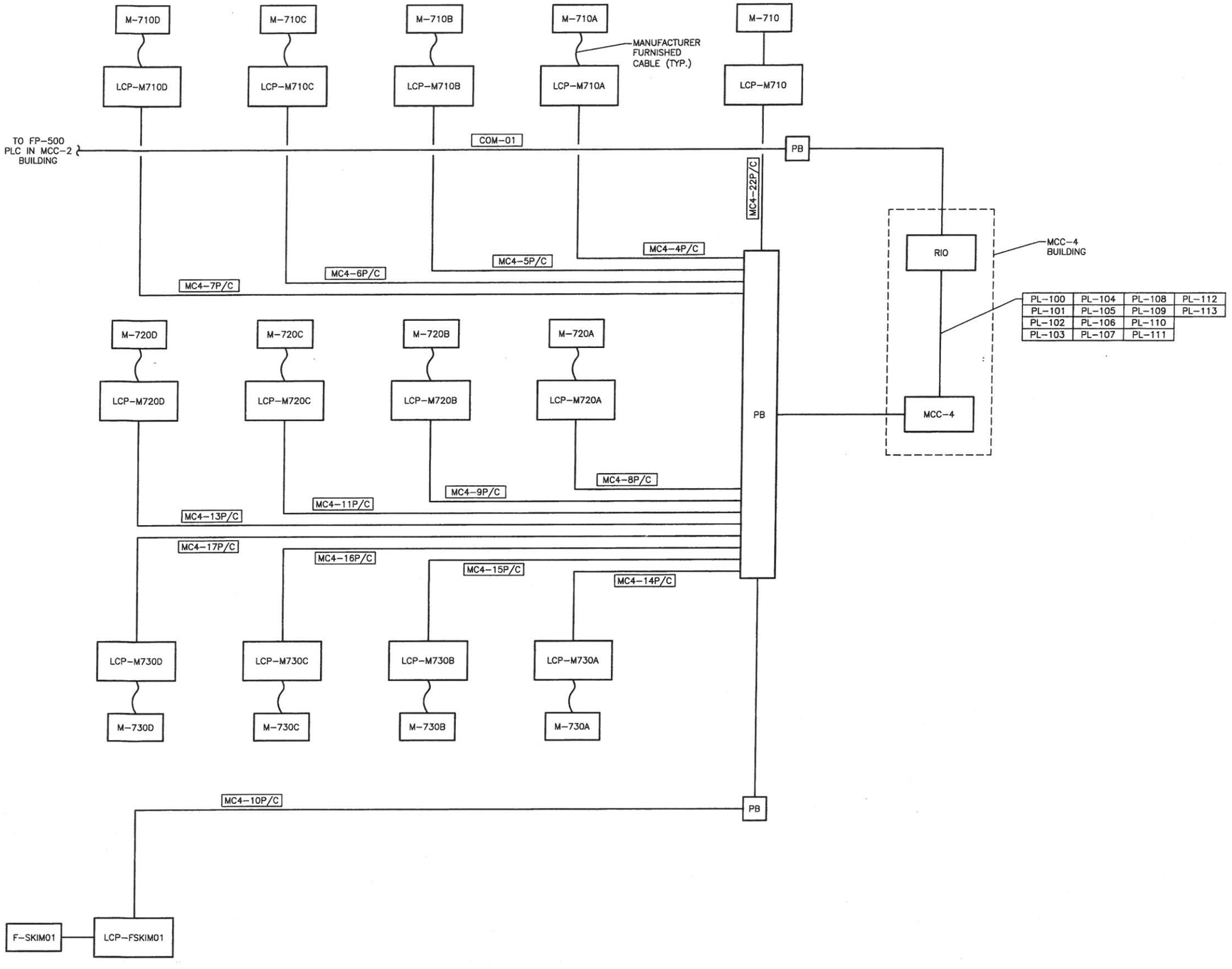

MIXERS RISER DIAGRAM

DATE	REVISION	BY

GAI
Gupta & Associates, Inc.
consulting engineering
Registration No. F-2593
7322 Southwest Freeway Suite 410
Houston, Texas 77074
Tel: 713-636-2936
Fax: 713-636-2987
email: hforouzan@gaiconsulting.com

STATE OF TEXAS
H. A. FOROUZAN
77748
REGISTERED PROFESSIONAL ENGINEER
03/15/2013

LJA Engineering Inc.
2929 Briarpark Drive
Suite 600
Houston, Texas 77042
Phone 713.953.5200
Fax 713.953.5026
FRN - F-1386

SURVEYED BY: AMANI ENG. | FB NO.: P-5679

CITY OF HOUSTON
DEPARTMENT OF PUBLIC WORKS AND ENGINEERING

ALMEDA SIMS WWTP & SPF IMPROVEMENTS PACKAGE-3

ELECTRICAL
MIXERS RISER DIAGRAM

WBS NUMBER	R-000298-0008-4
DRAWING SCALE	NTS
CITY OF HOUSTON, PM	IRAJ RANJBAR, P.E.
SHEET NO.	89 OF 117

PUBLIC WORKS & ENGINEERING
50431
HOUSTON, TEXAS

DWG: EC-21

Z:\V814_Houston Almeda Sims WWTP Improvement\Drawings\Electrical\Working\EC-21.dwg

40

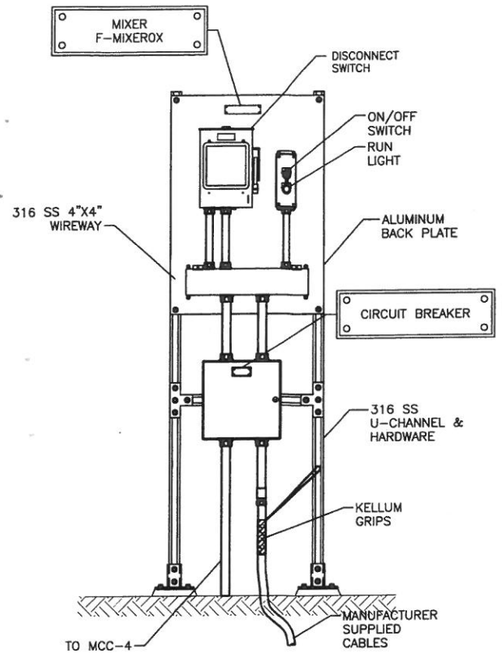

MIXER

DETAIL A
NTS
(TYP. FOR 6)

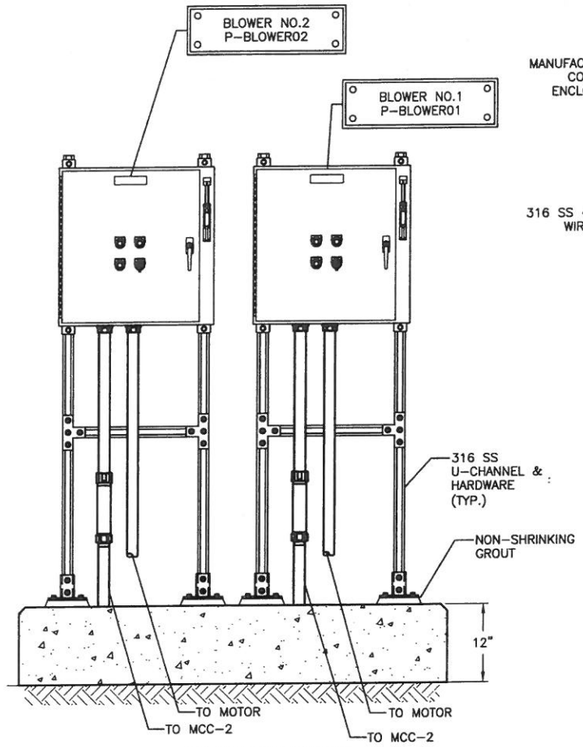

RE-AERATION BLOWER

DETAIL B
NTS

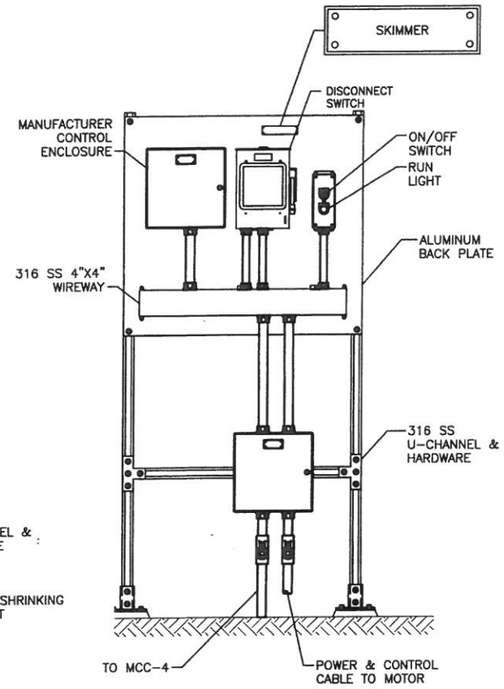

SKIMMER

DETAIL C
NTS

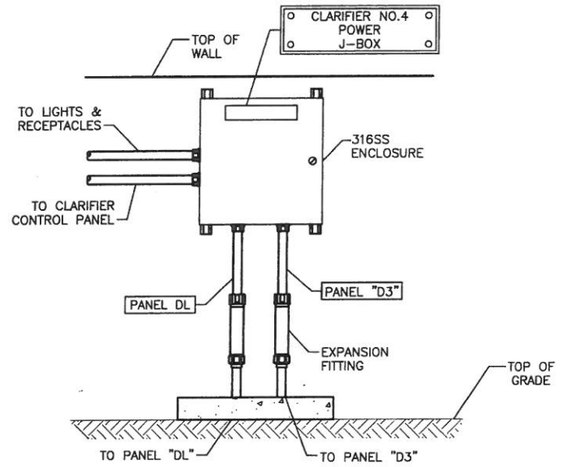

J-BOX MOUNTED AT CLARIFIER

DETAIL D
NTS

PANELBOARD: LA				BUS TYPE: COPPER	MAIN: 60A/2P		SPD: NONE	
SERVICE: 120/240V, 1ø, 3W				BUS RATING: 100A	LOCATION: MCC-4 ENCLOSURE			
MOUNTING: RECESSED				FEED: TOP				
CKT NO.	BRKR SIZE	WIRE SIZE	COND. SIZE	LOAD	LOAD	COND. SIZE	WIRE SIZE	BRKR SIZE	CKT NO.
1	20/1	12	3/4"	MCC-4 BUILDING LIGHT	MCC HEATERS	3/4"	12	20/1	2
3	20/1	12	3/4"	MCC-4 BUILDING RECEPTACLE	MCC HEATERS	3/4"	12	20/1	4
5	20/1	–	–	SPARE	RIO POWER	3/4"	12	20/1	6
7	20/1	12	3/4"	RIO POWER	SPARE	–	–	20/1	8
9	20/1	–	–	SPARE	SPARE	–	–	20/1	10
11	20/1	–	–	SPARE	SPARE	–	–	20/1	12
13	–	–	–	SPACE	SPACE	–	–	–	14
15	–	–	–	SPACE	SPACE	–	–	–	16
17	–	–	–	SPACE	SPACE	–	–	–	18

PANELBOARD NOTES:

CONDUIT SIZE SHOWN IS THE MINIMUM SIZE REQUIRED FOR INDIVIDUAL CIRCUITS. MULTIPLE CIRCUITS MAY BE COMBINED IN A SINGLE CONDUIT FOR FIELD ROUTING PROVIDED NEC MAXIMUM CONDUIT FILL IS NOT EXCEEDED.

DATE	REVISION	BY

GAI
Gupta & Associates, Inc.
consulting engineering
Registration No. F-2593
7322 Southwest Freeway Suite 410
Houston, Texas 77074
Tel: 713-636-2936
Fax: 713-636-2987
email: hforouzan@gaiconsulting.com

STATE OF TEXAS
H. A. FOROUZAN
77748
REGISTERED PROFESSIONAL ENGINEER
03/15/2013

LJA Engineering Inc.
2929 Briarpark Drive
Suite 600
Houston, Texas 77042
Phone 713.953.5200
Fax 713.953.5026
FRN - F-1386

SURVEYED BY: AMANI ENG. | FB NO.: P-5679

CITY OF HOUSTON
DEPARTMENT OF PUBLIC WORKS AND ENGINEERING

ALMEDA SIMS WWTP & SPF IMPROVEMENTS PACKAGE-3

ELECTRICAL DETAILS

WBS NUMBER
R-000298-0008-4

DRAWING SCALE
NTS

CITY OF HOUSTON, PM
IRAJ RANJBAR, P.E.

SHEET NO. 90 OF 117

PUBLIC WORKS AND ENGINEERING
50431
CITY ENGINEER
HOUSTON, TEXAS

DWG: EC-22

Z:\1614_Houston Almeda Sims WWTP Improvement\Drawings\Electrical\Working\EC-22.dwg

91

INTERFACE DIAGRAM (2)(4)(5)

LOOP NO.	DESCRIPTION	FIELD WIRING			RIO		PLC
	CHLORINE CONTACT BASINS						
–	SKIMMER F–SKIM01	MCC–4	C2	PL–100	FP–500 PLC REMOTE RACK (1)	COM–01 (5)	FP–500 PLC
–	MIXER NO.1 M–710A		C2	PL–101			
–	MIXER NO.2 M–710B		C2	PL–102			
–	MIXER NO.3 M–710C		C2	PL–103			
–	MIXER NO.4 M–710D		C2	PL–104			
–	MIXER NO.5 M–720A		C2	PL–105			
–	MIXER NO.6 M–720B		C2	PL–106			
–	MIXER NO.7 M–720C		C2	PL–107			
–	MIXER NO.8 M–720D		C2	PL–108			
–	MIXER NO.9 M–730A		C2	PL–109			
–	MIXER NO.10 M–730B		C2	PL–110			
–	MIXER NO.11 M–730C		C2	PL–111			
–	MIXER NO.12 M–730D		C2	PL–112			
–	MECHANICAL MIXER M–710		C2	PL–113			
–	BLOWER NO.1 LCP–BLOWER01	BCP1	C2	PL–140			
–	BLOWER NO.2 LCP–BLOWER02	BCP1	C2	PL–141			
	CLARIFIERS						
–	CLARIFIER NO.1 SCUM PUMP SC–P510 – LCP–SCP510	CP1	C4	PL–114			
–	CLARIFIER NO.1 LEVEL TRANSMITTER LIT–510	LIT	A1	PL–115			
–	CLARIFIER NO.2 SCUM PUMP SC–P520 – LCP–SCP520	CP2	C4	PL–116			
–	CLARIFIER NO.2 LEVEL TRANSMITTER LIT–520	LIT	A1	PL–117			
–	CLARIFIER NO.3 SCUM PUMP SC–P530 – LCP–SCP530	CP3	C4	PL–118			
–	CLARIFIER NO.3 LEVEL TRANSMITTER LIT–530	LIT	A1	PL–119			
–	CLARIFIER NO.4 SCUM PUMP SC–P540 – LCP–SCP540	CP4	C4	PL–120			
–	CLARIFIER NO.4 LEVEL TRANSMITTER LIT–540	LIT	A1	PL–121			
–	CLARIFIER NO.5 SCUM PUMP SC–P550 – LCP–SCP550	CP5	C4	PL–122			
–	CLARIFIER NO.5 LEVEL TRANSMITTER LIT–550	LIT	A1	PL–123			
–	CLARIFIER NO.4 CL–540	CP	C2	PL–130			

CONTROL & INSTRUMENTATION WIRE/CONDUIT SCHEDULE (1)(3)			
C1	2#14, 3/4"C	A1	1–1Pr#16 TSP, 3/4"C
C2	4#14, 3/4"C	A2	2–1Pr#16 TSP, 3/4"C
C3	6#14, 1"C	A3	3–1Pr#16 TSP, 3/4"C
C4	8#14, 1"C	A4	4–1Pr#16 TSP, 1"C
C5	10#14, 1"C	A5	5–1Pr#16 TSP, 1"C
C6	12#14, 1–1/4"C	A6	6–1Pr#16 TSP, 1–1/4"C
C7	14#14, 1–1/4"C	A7	7–1Pr#16 TSP, 2"C
C8	16#14, 1–1/4"C	A8	8–1Pr#16 TSP, 2"C
C9	18#14, 1–1/4"C	A9	9–1Pr#16 TSP, 2"C
C10	20#14, 1–1/4"C	A10	10–1Pr#16 TSP, 2"C
C11	22#14, 1–1/2"C	A11	11–1Pr#16 TSP, 2"C
C30	60#14, 3–1/2"C	M1	1–CAT–5E, 1"C
C37	74#14, 4"C	M2	2–CAT–5E, 1–1/2"C
		M3	3–CAT–5E, 2"C
		M4	4–CAT–5E, 2"C

NOTES:

(1) THE CONDUIT SIZE AS SHOWN ARE MINIMUM.

(2) ALL WIRES SHALL BE TERMINATED ON TERMINAL BLOCK. THERE SHALL BE NO LOOSE WIRES.

(3) THE SIZES AS SHOWN ARE MINIMUM. THE CONTRACTOR SHALL BE RESPONSIBLE TO FURNISH THE CABINET AND TERMINATE ALL WIRES PLUS 25% SPARE TERMINAL BLOCKS.

(4) THE CONTRACTOR SHALL INSTALL ALL CONDUITS AS SHOWN WHETHER SHOWN ON FLOOR PLAN OR NOT.

(5) RUN PROFIBUS CABLE IN 2" CONDUIT FROM THIS RACK TO FP–500 PLC LOCATED IN MCC–2 BUILDING.

CONTROL & INSTRUMENTATION WIRE/CONDUIT TABLE NOTES:

1) NOT ALL POSSIBLE COMBINATIONS ARE LISTED. INCLUDE A SEPARATE GROUND WIRE IN EACH CONDUIT RUN.

C# — # REPRESENTS PAIR OF WIRE
EXAMPLE C10 = 20#14 WIRES
EXAMPLE C20 = 40#14 WIRES
C = CONTROL

2) ANALOG CABLES ARE INTENDED TO BE INDIVIDUALLY INSULATED TWISTED SHIELDED PAIRS UNLESS OTHERWISE NOTED ON THE DRAWING.

DATE	REVISION	BY

GAI Gupta & Associates, Inc.
consulting engineering
Registration No. F-2593
7322 Southwest Freeway Suite 410
Houston, Texas 77074
Tel: 713-636-7936
Fax: 713-636-2987
email: hforouzan@gaiconsulting.com

STATE OF TEXAS — H. A. FOROUZAN — 77748 — REGISTERED PROFESSIONAL ENGINEER — 03/15/2013

LJA Engineering Inc.
2929 Briarpark Drive
Suite 600
Houston, Texas 77042
Phone 713.953.5200
Fax 713.953.5026
FRN - F-1386

SURVEYED BY: AMANI ENG. | FB NO.: P–5679

CITY OF HOUSTON
DEPARTMENT OF PUBLIC WORKS AND ENGINEERING

ALMEDA SIMS WWTP & SPF IMPROVEMENTS PACKAGE–3

ELECTRICAL INTERFACE DIAGRAM

WBS NUMBER	R–000298–0008–4
DRAWING SCALE	NTS
CITY OF HOUSTON, PM	IRAJ RANJBAR, P.E.
SHEET NO.	91 OF 117

PUBLIC WORKS AND ENGINEERING — 50431 — HOUSTON, TEXAS

DWG: EC–23

Z:\Y814_Houston Almada Sims WWTP Improvement\Drawings\Electrical\Working\EC–23.dwg

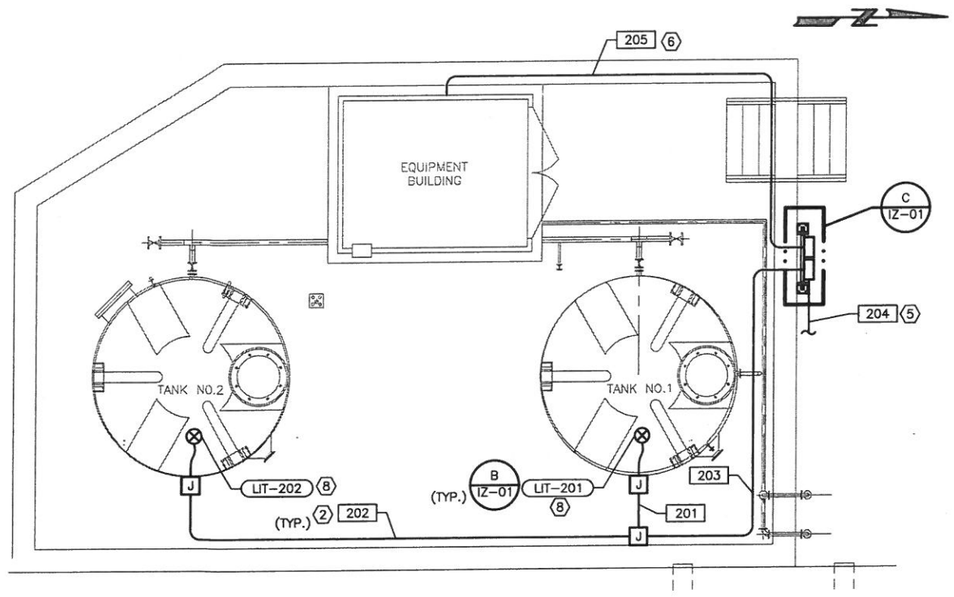

SODIUM HYPOCHLORITE TANKS ENLARGED
PLAN
1/4" = 1'-0" 7 10

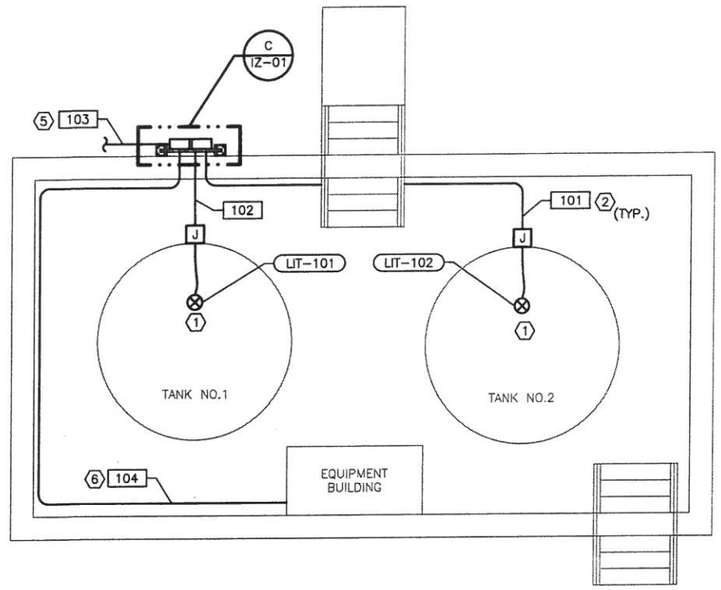

SODIUM BIOSULFATE TANKS PROCESS AND FACILITY ENLARGED
PLAN
1/4" = 1'-0" 7 10

NOTES:

1. EXISTING LEVEL PROBE SHALL BE DEMOLISHED AND NEW LEVEL PROBE SHALL BE INSTALLED.
2. INSTALL NEW WIRE AND CONDUIT FROM THE LEVEL PROBE TO THE LEVEL INDICATOR.
3. REFER TO DETAIL ON SHEET IZ-01.
4. INSTALL NEW WIRES IN EXISTING CONDUITS WHICH ARE USED FOR EXISTING LEVEL INSTRUMENTS.
5. THE CONTACTOR SHALL EXTEND THE CONDUIT TO CONNECT TO THE EXISTING CONDUIT CONNECTED TO THE LEVEL INSTRUMENTS.
6. PROVIDE 120V POWER FROM THE 120V LIGHTING OR RECEPTACLE CIRCUIT IN THE EQUIPMENT BUILDING.
7. FIELD ROUTE ALL CONDUITS.
8. NEW TANKS AND NEW LEVEL PROBE TRANSMITTERS.
9. REFER TO EC-23 FOR CONTROL AND INSTRUMENTATION WIRE AND CONDUIT SIZES.
10. REFER TO RISER DIAGRAM BELOW.

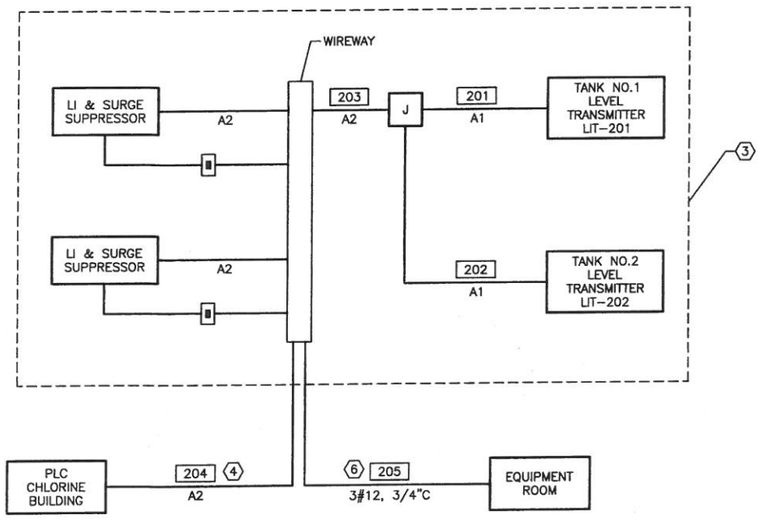

SODIUM HYPOCHLORITE TANKS RISER
DIAGRAM

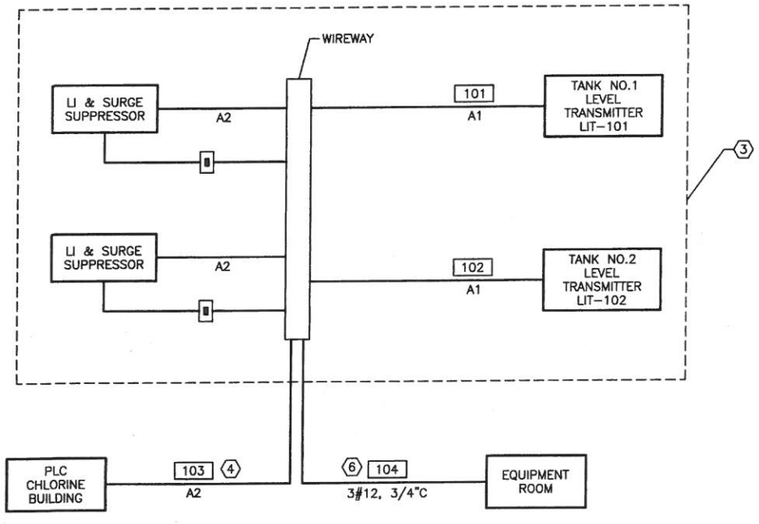

SODIUM BIOSULFATE TANKS PROCESS AND FACILITY RISER
DIAGRAM

DATE	REVISION	BY

GAI
Gupta & Associates, Inc.
consulting engineering
Registration No. F-2593
7322 Southwest Freeway Suite 410
Houston, Texas 77074
Tel: 713-636-2936
Fax: 713-636-2987
email:hforouzan@gaiconsulting.com

H. A. FOROUZAN
77748
REGISTERED PROFESSIONAL ENGINEER
STATE OF TEXAS
03/15/2013

LJA Engineering Inc.
2929 Briarpark Drive
Suite 600
Houston, Texas 77042
Phone 713.953.5200
Fax 713.953.5026
FRN - F-1386

SURVEYED BY: AMANI ENG. | FB NO.: P-5679

CITY OF HOUSTON
DEPARTMENT OF PUBLIC WORKS AND ENGINEERING

ALMEDA SIMS WWTP & SPF IMPROVEMENTS PACKAGE-3
ELECTRICAL
SODIUM HYPOCHLORITE TANKS & SODIUM BIOSULFATE TANKS PLANS AND RISER DIAGRAMS

WBS NUMBER	R-000298-0008-4
DRAWING SCALE	NTS
CITY OF HOUSTON, PM	IRAJ RANJBAR, P.E.
SHEET NO.	92 OF 117

PUBLIC WORKS AND ENGINEERING
50431
HOUSTON, TEXAS

DWG: EC-24

92

Z:\HB14_Houston Almeda Sims WWTP Improvements\Drawings\Electrical\Working\EC-24.dwg

ELECTRICAL LOAD ANALYSIS NEW MCC-4						
LOAD DESCRIPTION	QTY.	POWER HP	VOLT/PHASE	FLA	MULT.	NEC LOAD AMPS @480
MIXER	12	7.5	480/3	132	1.00	132.0
SKIMMER	1	5	480/3	7.6	1.00	7.6
MECHANICAL MIXER	1	30	480/3	40	1.00	40.0
SCUM PUMPS	5	7.5	480/3	55	1.00	50.0
TRANSFORMER	1	–	480/3	21	1.00	10.0
SUBTOTAL (CONNECTED)						244.6
25% OF LARGEST MOTOR				11	0.25	2.8
	TOTAL NEC LOAD:					247.4

ELECTRICAL LOAD ANALYSIS EXISTING MCC-2						
LOAD DESCRIPTION	QTY.	POWER HP	VOLT/PHASE	FLA	MULT.	NEC LOAD AMPS @480/277V
EXISTING						
MIXER REPLACED WITH NEW	1	30	480/3	40	1.00	40
SCREEN S-5200	1	2	480/3	3.4	1.00	3.4
SCREEN CONVEYOR	1	2	480/3	3.4	1.00	3.4
TRANSFORMER FEEDING DICHLOR BUILDING	1	–	480/3	52	1.00	52.1
BF-HV PANEL	1	–	480/3	23	1.00	40.0
BACK FLUSH PUMPS	1	–	480/3	104	1.00	104.0
PROPOSED						
NEW SCUM PUMP	1	10	480/3	14	1.00	14.0
NEW SCUM PUMP	1	10	480/3	14	1.00	14.0
NEW SCUM PUMP	1	10	480/3	14	1.00	14.0
NEW SCUM PUMP	1	10	480/3	14	1.00	14.0
NEW SCUM PUMP	1	10	480/3	14	1.00	14.0
SUBTOTAL (CONNECTED)						312.9
25% OF LARGEST MOTOR				40	0.25	10.0
	TOTAL NEC LOAD:					322.9

ELECTRICAL LOAD ANALYSIS SWITCHBOARD ELS LOCATION: SOUTHEAST EAST LIFT STATION				
LOAD DESCRIPTION	VOLT/PHASE	FLA.	MULT.	NEC LOAD AMPS @480/277V
EXISTING LOADS				
MCC-1	480/3	274.9	0.7	192.4
MCC-2	480/3	267.9	0.7	187.5
MCC-3	480/3	796.3	0.7	557.4
NPW	480/3	232.9	0.7	163.0
PROPOSED				
MCC-4	480/3	244.6	0.7	171.2
PANEL DP	480/3	174.6	0.7	122.2
	TOTAL NEC LOAD:			1393.8

DISTRIBUTION PANEL DP (NEW)					
LOAD DESCRIPTION	QTY.	POWER HP	VOLT/PHASE	FLA	MULT.
PANELBOARD DP, 480Y/277V, 3ø, 3W, 400A BUS, 400A MAIN, 42KAIC					
PANEL D (SINGLE PANEL)	1	–	480/3	73.5	–
PANEL D1 (SINGLE PANEL)	1	–	480/3	60	0.5
PANEL D2 (SINGLE PANEL)	1	–	480/3	32	0.5
PANEL D3 (SINGLE PANEL)	1	–	480/3	87	–
SUBTOTAL (CONNECTED)					1.0
25% OF LARGEST MOTOR		5		7.6	

NEW AND REVISED LOADS

ELECTRICAL LOAD ANALYSIS 480V PANELS D, D1, D2, D3, DL LOCATION: CLARIFIER/EFFLUENT POWER DISTRIBUTION BUILDING			
LOAD DESCRIPTION	CONNECTED LOAD AMPS @480/277V	MULT.	NEC LOAD AMPS @480
PANEL D			
AREA LIGHTING 15,386VA @ 480V	18.5	1.25	23.1
GATE ACTIVATORS 11 @ 3.2HP	55.0	0.50	27.5
PANEL D1			
GATE ACTIVATORS 12 @ 3.2HP	60.0	0.50	30.0
PANEL D2			
GATE ACTIVATORS 4 @ 3.2HP	20.0	0.50	10.0
GATE ACTIVATORS 4 @ 1.5HP	12.0	0.50	6.0
PANEL D3			
GATE ACTIVATORS 2 @ 5HP	15.2	0.50	7.6
CLARIFIERS 5 @ 1.5HP	15.0	1.00	15.0
EQUIPMENT BUILDING	3.3	1.00	3.3
PANEL DL VIA 1 TRANSFORMER @ 25KVA	52.1	1.00	52.1

ELECTRICAL LOAD ANALYSIS EXISTING MCC-3 (1)					
LOAD DESCRIPTION	POWER HP	VOLT/PHASE	FLA	MULT.	NEC LOAD AMPS @480
MCC-2, 480V, 3ø, 3W, 600A BUS					
PUMP N 220C	125	480/3	156	1.00	156
PUMP N 220D	125	480/3	156	1.00	156
PUMP N 220E	125	480/3	156	1.00	156
PUMP N 220A	100	480/3	124	1.00	124
PUMP N 220B	100	480/3	124	1.00	124
EF-1	2	480/3	3.4	1.00	3.4
EF-2	1.5	480/3	3	1.00	3
SF-1	3	480/3	4.8	1.00	4.8
SF-2	1.5	480/3	3	1.00	3
ELEVATOR	–		15	1.00	15
PANEL LP	–		36	1.00	36
SUMP PUMP	–		15	1.00	15
SUBTOTAL (CONNECTED)					796
25% OF LARGEST MOTOR			156	0.25	39
	TOTAL NEC LOAD:				835

HISTORICAL LOADS FROM RECORD DRAWINGS

ELECTRICAL LOAD ANALYSIS MCC-1 LOCATION: MAIN AERATION BLOWER BUILDING (1)			
LOAD DESCRIPTION	CONNECTED LOAD AMPS @480/277V	MULT.	NEC LOAD AMPS @480
4 MOTORS @ 1/2HP	4.4	1.00	4.4
1 MOTOR @ 3/4HP	1.6	1.00	1.6
5 MOTORS @ 1HP	10.5	1.00	10.5
1 MOTOR @ 2-1/2HP	4.1	1.00	4.1
2 BAR SCREENS @ 3HP	9.6	1.00	9.6
1 MOTOR @ 5HP	7.6	1.00	7.6
3 MOTORS @ 15HP	63.0	1.00	63.0
2 MOTORS @ 20HP	54.0	1.00	54.0
2 MOTORS @ 25HP	68.0	1.00	68.0
1 TRANSFORMER @ 25KVA	52.1	1.00	52.1
SUBTOTAL			274.9
25% OF LARGEST MOTOR – 25HP	34.0	0.25	8.5
	TOTAL NEC LOAD:		283.4

ELECTRICAL LOAD ANALYSIS NPW LOCATION: NPW PUMP SKID			
LOAD DESCRIPTION	CONNECTED LOAD AMPS @480/277V	MULT.	NEC LOAD AMPS @480
4 MOTORS @ 40HP	208.0	1.00	208.0
1 MOTOR @ 3HP	4.8	1.00	4.8
1 TRANSFORMER @ 10KVA	20.1	1.00	20.1
SUBTOTAL			232.9
25% OF LARGEST MOTOR – 40HP	52.0	0.25	13.0
	TOTAL NEC LOAD:		245.9

NOTES:

(1) THIS MCC IS EXISTING AND IS RECONNECTED TO SWITCHBOARD "ELS".

DATE	REVISION	BY

GAI
Gupta & Associates, Inc.
consulting engineering
Registration No. F-2593
7322 Southwest Freeway Suite 410
Houston, Texas 77074
Tel: 713-636-7936
Fax: 713-636-7987
email:hforouzan@gaiconsulting.com

03/15/2013

STATE OF TEXAS
H. A. FOROUZAN
77748
REGISTERED PROFESSIONAL ENGINEER

LJA Engineering Inc.
2929 Briarpark Drive
Suite 600
Houston, Texas 77042
Phone 713.953.5200
Fax 713.953.5026
FRN - F-1386

SURVEYED BY: AMANI ENG. | FB NO.: P-5679

CITY OF HOUSTON
DEPARTMENT OF PUBLIC WORKS AND ENGINEERING

ALMEDA SIMS WWTP & SPF IMPROVEMENTS PACKAGE-3

ELECTRICAL LOAD ANALYSES

WBS NUMBER	R-000298-0008-4
DRAWING SCALE	NTS
CITY OF HOUSTON, PM	IRAJ RANJBAR, P.E.
SHEET NO. 93 OF 117	

PUBLIC WORKS AND ENGINEERING
50431
CITY REGISTRATION NUMBER
HOUSTON, TEXAS

DWG: EC-25

Z:\1814_Houston Almeda Sims WWTP Improvement\Drawings\Electrical\Working\EC-25.dwg

94

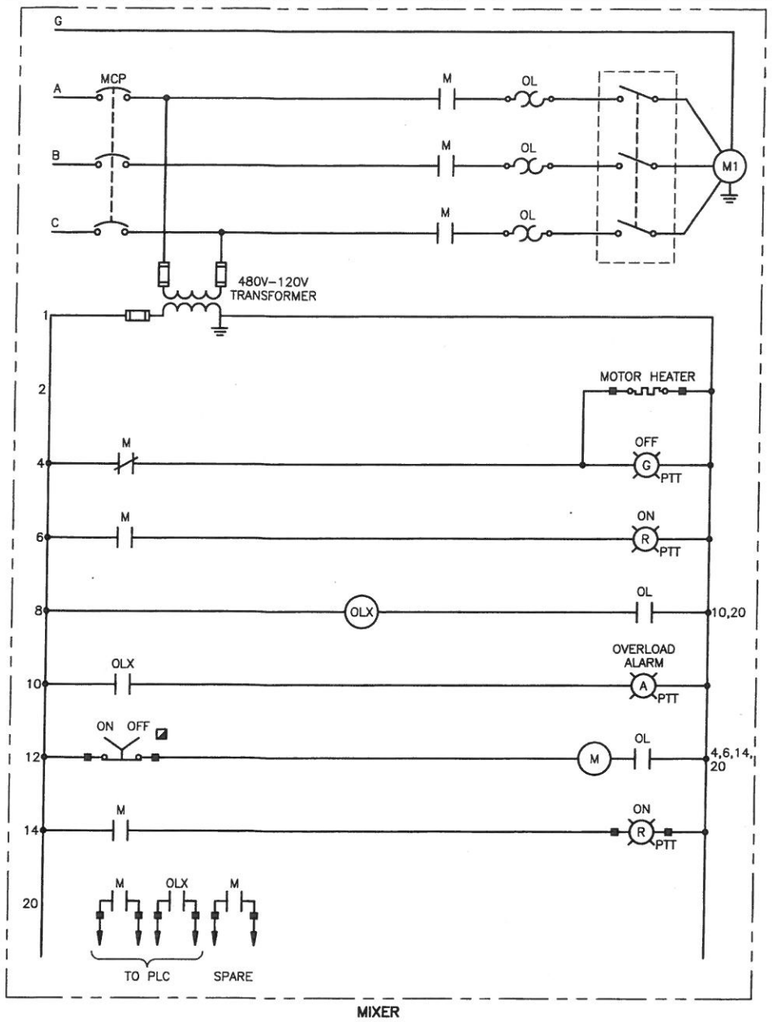

MIXER

SCHEMATIC 1 –

NTS

(TYP. OF M–710A, M–710B, M–710C, M–710D, M–720A, M–720B, M–720C, M–720D, M–730A, M–730B, M–730C, M–730D)

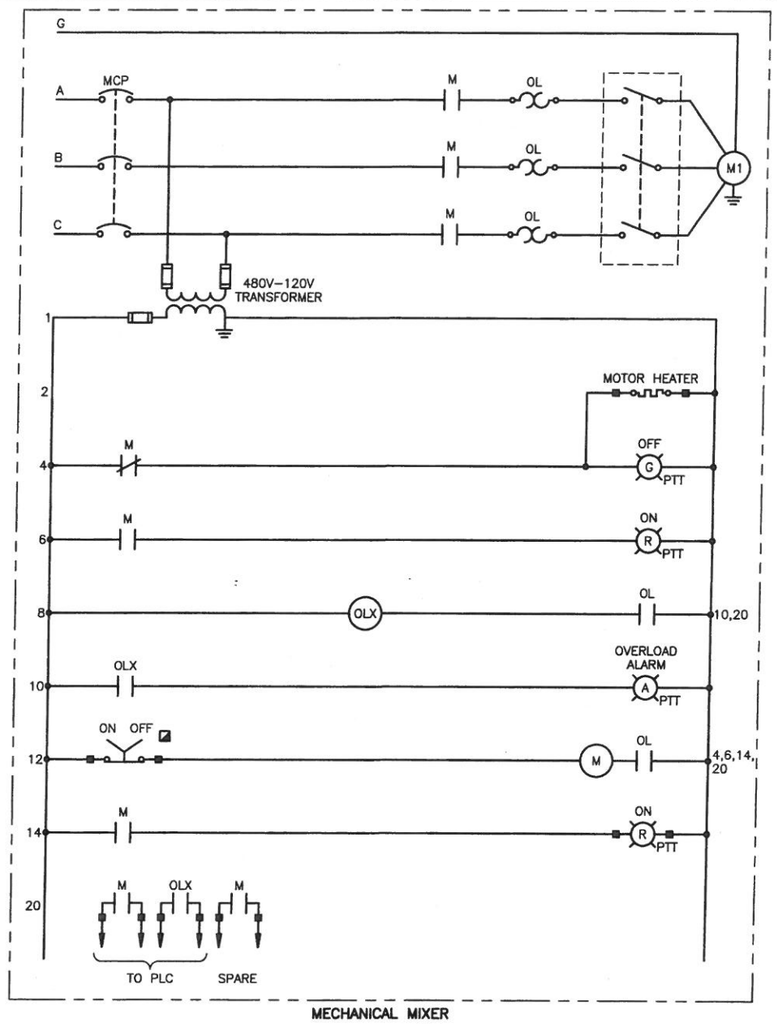

MECHANICAL MIXER

SCHEMATIC 2 –

NTS

(TYP. OF M–710)

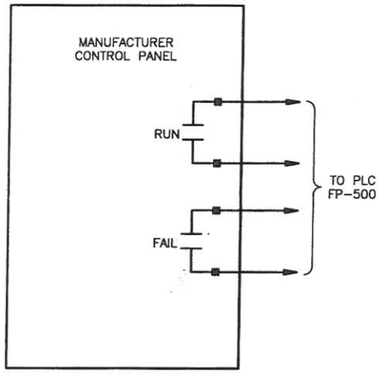

CLARIFIER NO.4 BLOCK

DIAGRAM 3 –

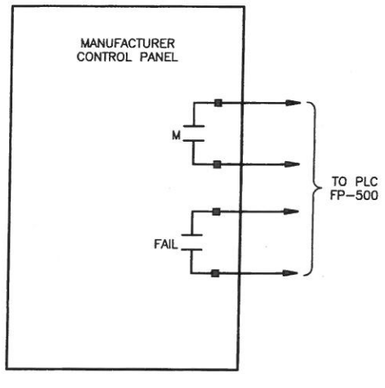

BLOWER BLOCK

DIAGRAM 4 –

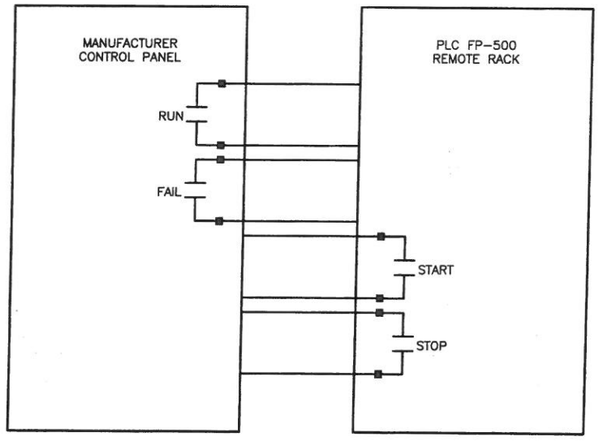

SCUM PUMPS BLOCK

DIAGRAM 5 –

TYP. OF SC–510, SC–520, SC–530, SC–540, SC–550

LEGEND:

- ◪ DEVICE LOCATED IN THE FIELD.
- ● LOCATED AT PLC.
- ▲ DEVICE LOCATED AT THE LCP.
- ■ TERMINAL IN MCC FOR FIELD WIRING.
- • CONNECTION IN MCC.

DATE	REVISION	BY

GAI
Gupta & Associates, Inc.
consulting engineering
Registration No. F-2593
7322 Southwest Freeway Suite 410
Houston, Texas 77074
Tel: 713-636-2936
Fax: 713-636-2987
email: hforouzan@gaiconsulting.com

H. A. FOROUZAN
77748
REGISTERED PROFESSIONAL ENGINEER
STATE OF TEXAS
03/15/2013

LJA Engineering Inc.
2929 Briarpark Drive
Suite 600
Houston, Texas 77042
Phone 713.953.5200
Fax 713.953.5026
FRN - F-1386

SURVEYED BY: AMANI ENG. | FB NO.: P–5679

CITY OF HOUSTON

DEPARTMENT OF PUBLIC WORKS AND ENGINEERING

ALMEDA SIMS WWTP & SPF IMPROVEMENTS PACKAGE–3

ELECTRICAL
SCHEMATIC – I

WBS NUMBER	R–000298–0008–4
DRAWING SCALE	NTS
CITY OF HOUSTON, PM	IRAJ RANJBAR, P.E.
SHEET NO.	94 OF 117

PUBLIC WORKS AND ENGINEERING
50431
CITY ENGINEER
HOUSTON, TEXAS

DWG: EY–01

Z:\H814_Houston Almeda Sims WWTP Improvement\Drawings\Electrical\Working\EY-01.dwg

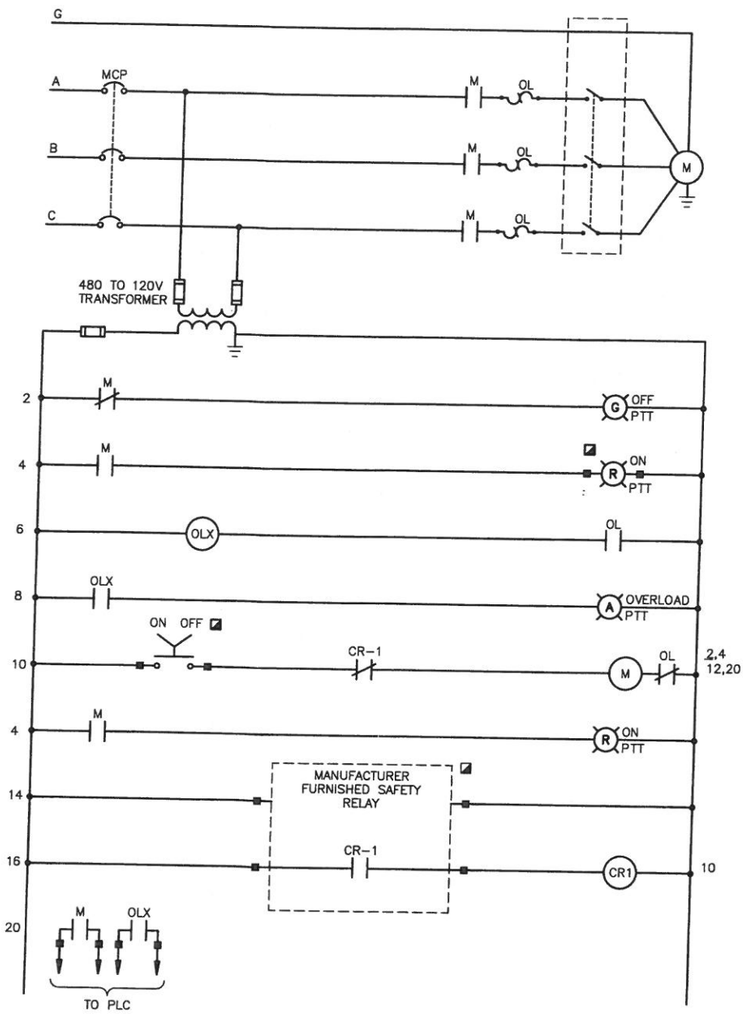

SKIMMER

SCHEMATIC 1

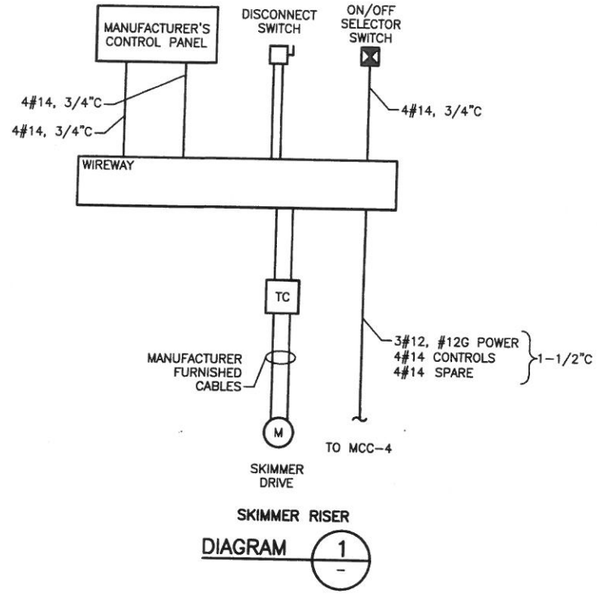

SKIMMER RISER

DIAGRAM 1

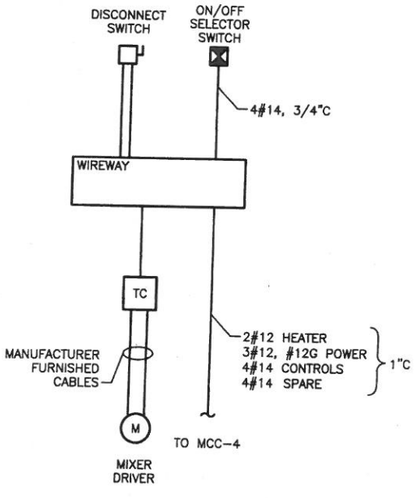

MIXER RISER

DIAGRAM 2

LEGEND:

- ◪ DEVICE LOCATED IN THE FIELD.
- ● LOCATED AT PLC.
- ▲ DEVICE LOCATED AT THE LCP.
- ■ TERMINAL IN MCC FOR FIELD WIRING.
- • CONNECTION IN MCC.

NOTES:

1. ALL PILOTS LIGHTS SHALL BE LED TYPE AND PUSH TO TEST LIGHTS.

DATE	REVISION	BY

GAI
Gupta & Associates, Inc.
consulting engineering
Registration No. F-2593
7322 Southwest Freeway Suite 410
Houston, Texas 77074
Tel: 713-436-7936
Fax: 713-636-2987
email: hforouzan@gaiconsulting.com

STATE OF TEXAS — H. A. FOROUZAN — 77748 — REGISTERED PROFESSIONAL ENGINEER

03/15/2013

LJA Engineering Inc.
2929 Briarpark Drive
Suite 600
Houston, Texas 77042
Phone 713.953.5200
Fax 713.953.5026
FRN - F-1386

SURVEYED BY: AMANI ENG. | FB NO.: P-5679

CITY OF HOUSTON

DEPARTMENT OF PUBLIC WORKS AND ENGINEERING

ALMEDA SIMS WWTP & SPF IMPROVEMENTS PACKAGE-3

ELECTRICAL SCHEMATIC – II

WBS NUMBER	R-000298-0008-4
DRAWING SCALE	NTS
CITY OF HOUSTON, PM	IRAJ RANJBAR, P.E.
SHEET NO.	95 OF 117

PUBLIC WORKS AND ENGINEERING — 50431 — HOUSTON, TEXAS

DWG: EY-02

Z:\Vol14_Houston Almeda Sims WWTP improvement\Drawings\Electrical\Working\EY-02.dwg

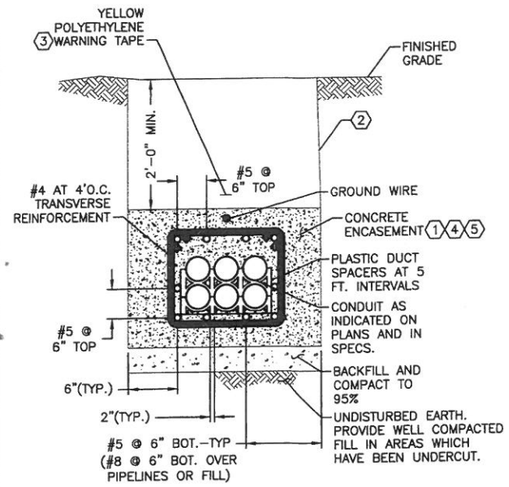

NOTES:

1. PROVIDE MIN. 3 INCHES CONCRETE COVER OVER AND UNDER REINFORCEMENT CAGE AND 6 INCHES ON EACH SIDE.
2. SELECT FILL TO A MINIMUM OF 2 FT. ABOVE DUCT BANK. COMPACT ALL BACKFILL IN 8 IN. LIFTS TO 90 PERCENT OF STANDARD PROCTOR (ASTM D 698) DENSITY, UNLESS UNDER EXISTING OR PROPOSED PAVEMENT, OTHER UNDERGROUND UTILITIES, OR STRUCTURES. IF DUCT BANK IS UNDER EXISTING OR PROPOSED PAVEMENT, OTHER UNDERGROUND UTILITIES, OR STRUCTURES, COMPACT ALL BACKFILL IN 8 IN. LIFTS TO 95 PERCENT OF STANDARD PROCTOR DENSITY.
3. REFER TO SPEC SECTION 16600 FOR ADDITIONAL REQUIREMENTS.
4. REFER TO CONCRETE SPECS (03000s) FOR MIX DESIGN.
5. RED DYE TO BE MIXED IN CONCRETE BEFORE PLACEMENT.

REINFORCED CONCRETE ENCASED CONDUIT DUCTBANK

DETAIL A / NTS

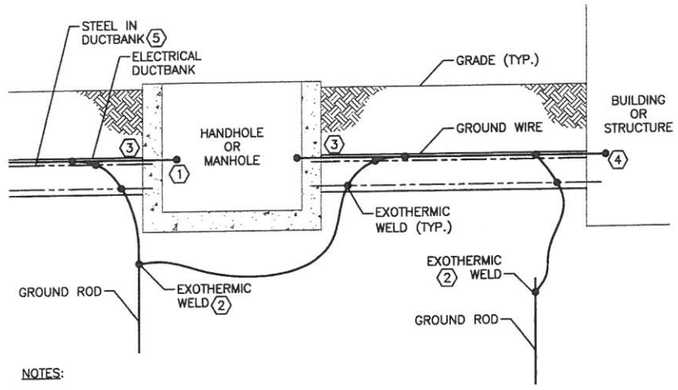

NOTES:

1. REFER TO ELECTRICAL MANHOLE DETAIL.
2. GROUND RODS TO BE 24" LATERALLY AWAY FROM DUCTBANK.
3. SEE DETAIL FOR WATERTIGHT DUCT PENETRATION BELOW GROUND MANHOLES OR HANDHOLES.
4. SEE DETAIL FOR WATERTIGHT DUCT PENETRATION STRUCTURES OTHER THAN MANHOLES OR HANDHOLES.
5. DUCTBANKS STEEL IS TO BE EMBEDDED INTO STRUCTURES AND BUILDING.

DUCTBANK GROUNDING

DETAIL C / NTS

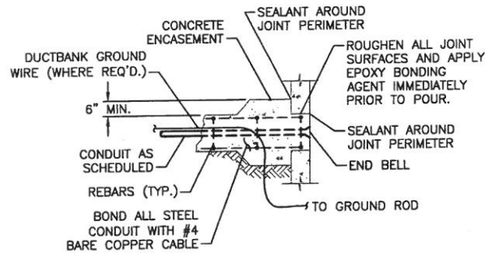

WATERTIGHT DUCT PENETRATION BELOW GROUND MANHOLES OR HANDHOLES

DETAIL D / NTS

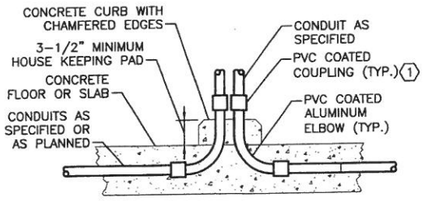

NOTES:

1. THE FIRST FITTING PAST ANY FINISH SURFACE SHALL BE A MIN. OF 3" ABOVE THAT FINISH SURFACE.

INTERIOR OR EXTERIOR – CONCEALED CONDUIT INSTALLATION CONCRETE SLAB

DETAIL B / NTS

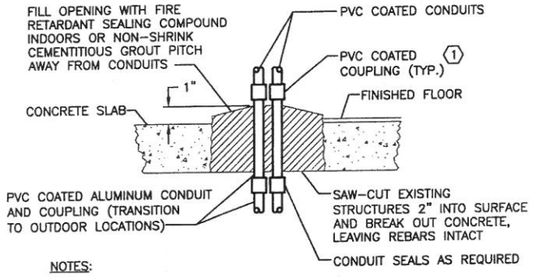

NOTES:

1. THE FIRST FITTING PAST ANY FINISH SURFACE SHALL BE A MIN. OF 3" ABOVE THAT FINISH SURFACE.

EXISTING CONCRETE SLAB–WET LOCATIONS – WATERTIGHT CONDUIT PENETRATION

DETAIL E / NTS

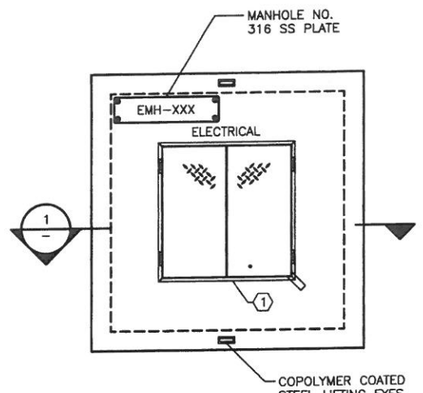

PLAN

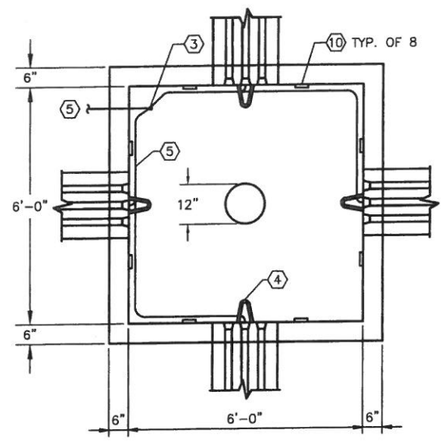

SECTION 2 / NTS

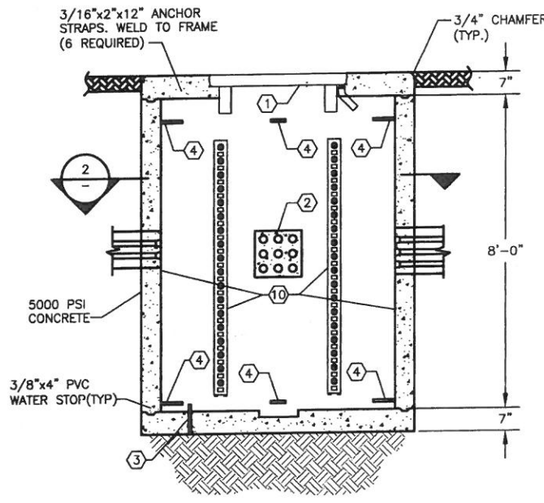

SECTION 1 / NTS

THESE MANHOLE DETAILS SHALL ONLY BE USED FOR 600V SYSTEMS

NOTES:

1. MANHOLE COVER SHALL BE AS SPECIFIED, AND SHALL BE STAMPED ELECTRICAL OR COMMUNICATION AS REQUIRED BY CONTRACTOR.
2. ALL CONDUITS SHALL BE TERMINATED IN MANHOLE WITH BELL ENDS AND CENTER ON THE ENTERING WALL.
3. 3/4"ø X 10'-0" STAINLESS STEEL (ONLY AT TRA, COPPER CLAD STEEL OTHERWISE) GROUND ROD.
4. PROVIDE PULLING IRONS AS SPECIFIED.
5. #4/0 BARE STRANDED TINNED COPPER CONDUCTOR TO MAIN GROUND GRID.
6. MANHOLES SHALL BE EQUIPPED WITH 12" DEPRESSION.
7. MANHOLE EXTENSIONS SHALL BE USED WHENEVER BOX IS BELOW EXISTING GRADE.
8. ANCHORS SHALL BE 316 SS OR FIBERGLASS AS SPECIFIED.
9. MANHOLE SHALL BE 12" ABOVE GRADE WHEN LOCATED IN GRASSY AREAS, CONTRACTOR SHALL PROVIDE A 12" MOW STRIP 6" TALL AROUND MANHOLE.
10. MOUNTING RACKS SHALL BE AS SPECIFIED.
11. REFER TO SPECIFICATION 16600 "UNDERGROUND SYSTEM" FOR ADDITIONAL INFORMATION.

(NON-ROADWAY) ELECTRICAL MANHOLE (EMH)

DETAIL F / NTS — 7 8 9 11

DATE	REVISION	BY

GAI
Gupta & Associates, Inc.
consulting engineering
Registration No. F-2593
7322 Southwest Freeway Suite 410
Houston, Texas 77074
Tel: 713-636-2936
Fax: 713-636-2987
email.hforouzan@gaiconsulting.com

STATE OF TEXAS — H. A. FOROUZAN — 77748 — REGISTERED PROFESSIONAL ENGINEER

03/15/2013

LJA Engineering Inc.
2929 Briarpark Drive
Suite 600
Houston, Texas 77042
Phone 713.953.5200
Fax 713.953.5026
FRN - F-1386

SURVEYED BY: AMANI ENG. | FB NO.: P-5679

CITY OF HOUSTON

DEPARTMENT OF PUBLIC WORKS AND ENGINEERING

ALMEDA SIMS WWTP & SPF IMPROVEMENTS PACKAGE-3

ELECTRICAL STANDARD DETAILS – I

WBS NUMBER	R-000298-0008-4
DRAWING SCALE	NTS
CITY OF HOUSTON, PM	IRAJ RANJBAR, P.E.
SHEET NO.	96 OF 117

DWG: EZ-01

50431

97

Z:\H814_Houston Almeda Sims WWTP Improvement\Drawings\Electrical\Working\EZ-01.dwg

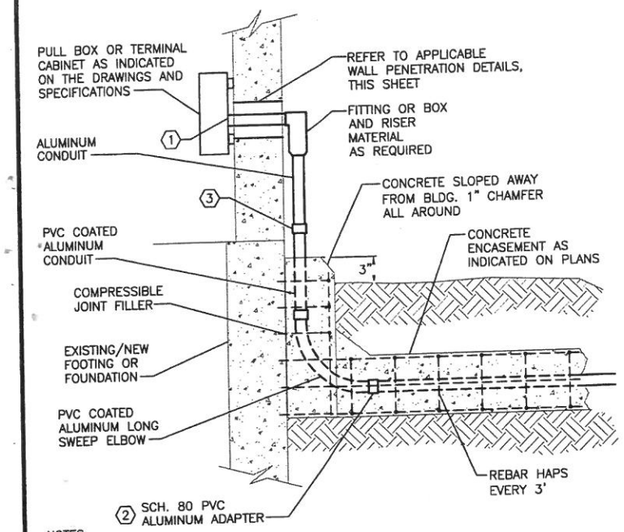

NOTES:

1. SEAL ALL CONDUITS ENTERING ENCLOSURES WITH REMOVABLE SILICON CAULK.
2. APPLY RUBBER ELECTRICAL TAPE TO ALL EXPOSED METAL CONDUIT OR CONDUIT THREADS. EXTENDS TAPE A MINIMUM 2" IN BOTH DIRECTIONS BEYOND EXPOSED CONDUIT.
3. THE FIRST FITTING PAST ANY FINISH SURFACE SHALL BE A MIN. OF 3" ABOVE THAT FINISH SURFACE.

ABOVE GRADE CONDUIT TERMINATION

DETAIL A / NTS

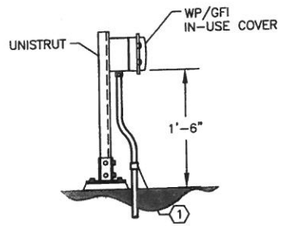

NOTES:

1. THE FIRST FITTING PAST ANY FINISH SURFACE SHALL BE A MIN. OF 3" ABOVE THAT FINISH SURFACE.

120V RECEPTACLE

DETAIL C / NTS

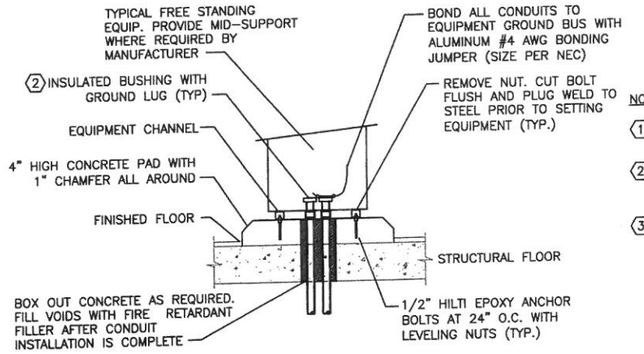

NOTES:

1. ALSO SEE STRUCTURAL DETAILS FOR FURTHER INFORMATION.
2. SEAL ALL CONDUITS ENTERING ENCLOSURES WITH REMOVABLE SILICON CAULK.
3. THE FIRST FITTING PAST ANY FINISH SURFACE SHALL BE A MIN. OF 3" ABOVE THAT FINISH SURFACE.

ELECTRICAL EQUIPMENT MOUNTING

DETAIL E / NTS 1

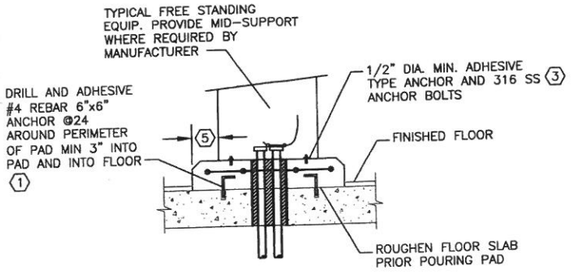

NOTES:

1. ALSO SEE STRUCTURAL DETAILS FOR FURTHER INFORMATION.
2. CONTRACTOR SHALL ENSURE FINAL INSTALLATION LEVEL.
3. CONTRACTOR SHALL PROVIDE THE CORRECT SIZE ANCHOR BASED ON LOAD.
4. COORDINATE CONDUIT PENETRATION THROUGH FLOOR AND EQUIPMENT PAD WITH STRUCTURAL DESIGN.
5. MIN. 3" LARGER THAN EQUIPMENT ALL AROUND.

ELECTRICAL EQUIPMENT MOUNTING

DETAIL B / NTS

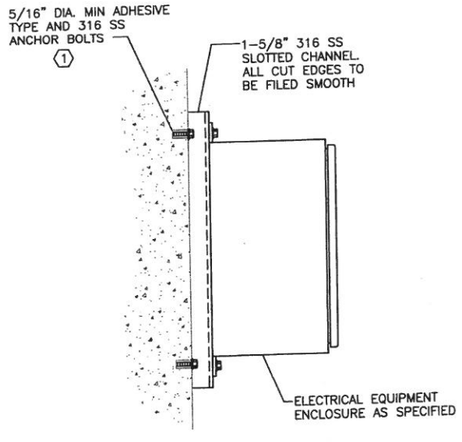

NOTES:

1. CONTRACTOR SHALL BE RESPONSIBLE FOR PROVIDING THE CORRECT SIZE ANCHOR BOLTS BASED ON LOAD

ELECTRICAL EQUIPMENT MOUNTING

DETAIL D / NTS

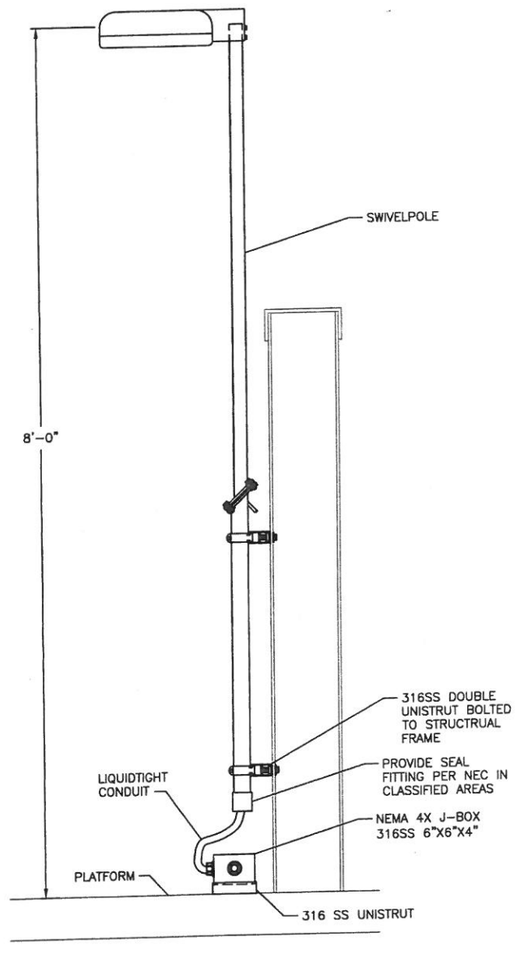

STRUCTURE MOUNTED SWIVEL POLE LIGHT (CLARIFIER LIGHT)

DETAIL F / NTS

DATE	REVISION	BY

GAI
Gupta & Associates, Inc.
consulting engineering
Registration No. F-2593
7322 Southwest Freeway Suite 410
Houston, Texas 77074
Tel: 713-636-2930
Fax: 713-636-2987
email: hforouzan@gaiconsulting.com

H. A. FOROUZAN
77748
REGISTERED PROFESSIONAL ENGINEER
STATE OF TEXAS
03/15/2013

LJA Engineering Inc.
2929 Briarpark Drive
Suite 600
Houston, Texas 77042
Phone 713.953.5200
Fax 713.953.5026
FRN - F-1386

SURVEYED BY: AMANI ENG. | FB NO.: P-5679

CITY OF HOUSTON
DEPARTMENT OF PUBLIC WORKS AND ENGINEERING

ALMEDA SIMS WWTP & SPF IMPROVEMENTS PACKAGE-3

ELECTRICAL STANDARD DETAILS – II

WBS NUMBER	R-000298-0008-4
DRAWING SCALE	NTS
CITY OF HOUSTON, PM	IRAJ RANJBAR, P.E.
SHEET NO.	97 OF 117

DWG: EZ-02

50431

Z:\H814_Houston Almeda Sims WWTP Improvement\Drawings\Electrical\Working\EZ-02.dwg

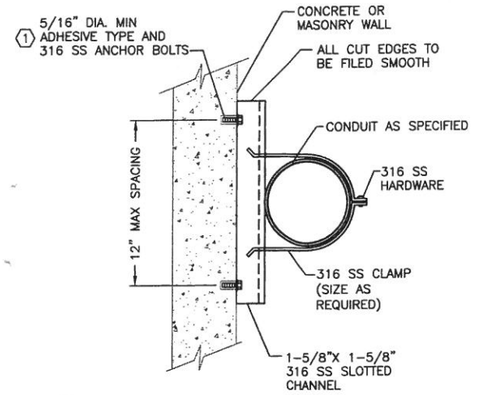

NOTES:

1. CONTRACTOR WILL BE RESPONSIBLE FOR PROVIDING THE CORRECT SIZE ANCHOR BOLTS BASED ON LOAD.
2. FOR SINGLE CONDUITS 2" AND LARGER, USE SLOTTED CHANNEL AND ADHESIVE ANCHORS AS SHOWN.
3. FOR SINGLE CONDUITS 1-1/2" AND SMALLER, SLOTTED CHANNEL MAY BE OMITTED AND USE OF NON-ADHESIVE ANCHORS ARE PERMITTED.

CEILING OR WALL – SINGLE EXPOSED CONDUIT INSTALLATION

DETAIL A / NTS

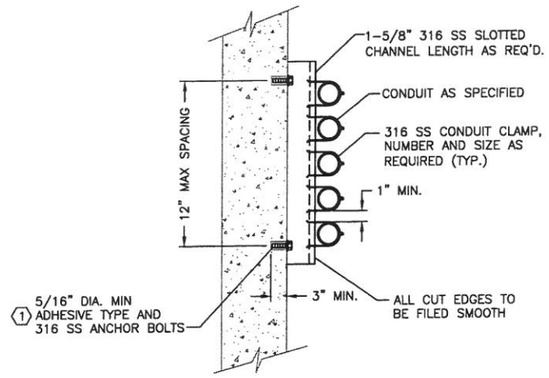

NOTES:

1. CONTRACTOR WILL BE RESPONSIBLE FOR PROVIDING THE CORRECT SIZE ANCHOR BOLTS BASED ON LOAD.

WALL – MULTIPLE EXPOSED CONDUIT INSTALLATION

DETAIL C / NTS

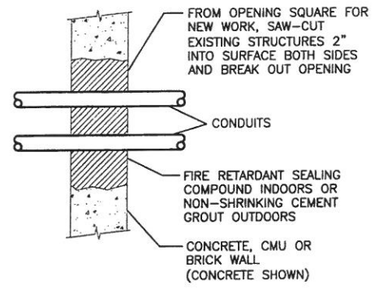

NOTES:

1. LEAVE REBAR INTACT WHEN BREAKING OUT EXISTING WALLS.

BLOCK OR CONCRETE WALL – INTERIOR CONDUIT PENETRATION

DETAIL E / NTS

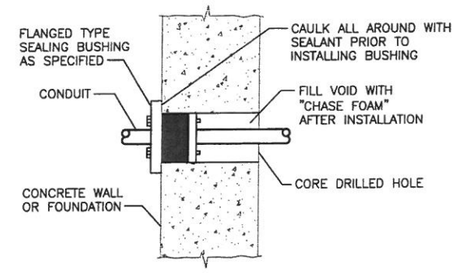

EXISTING STRUCTURES ABOVE GRADE – WATERTIGHT CONDUIT PENETRATION

DETAIL G / NTS

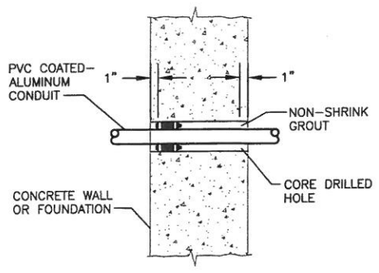

EXISTING STRUCTURE ABOVE GRADE – WATERTIGHT CONDUIT PENETRATION

DETAIL B / NTS

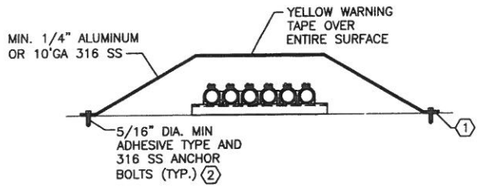

NOTES:

1. PROVIDE 1/8" NEOPRENE GASKET WHERE ALUMINUM IS SELECTED. DO NOT ALLOW ALUMINUM TO COME INTO DIRECT CONTACT WITH CONCRETE.
2. CONTRACTOR WILL BE RESPONSIBLE FOR PROVIDING THE CORRECT SIZE ANCHOR BOLTS BASED ON LOAD.

CONDUIT COVER

DETAIL D / NTS

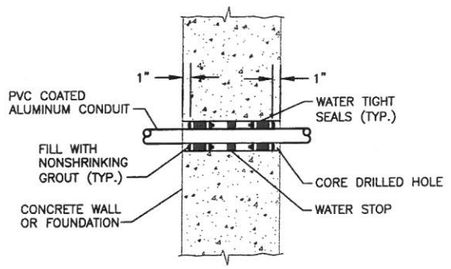

EXISTING STRUCTURE BELOW GRADE – WATERTIGHT CONDUIT PENETRATION

DETAIL F / NTS

DATE	REVISION	BY

GAI
Gupta & Associates, Inc.
consulting engineering
Registration No. F-2593
7322 Southwest Freeway Suite 410
Houston, Texas 77074
Tel: 713-636-2936
Fax: 713-636-2937
email: hforouzan@gaiconsulting.com

03/15/2013

STATE OF TEXAS
H. A. FOROUZAN
77748
REGISTERED
PROFESSIONAL ENGINEER

LJA Engineering Inc.
2929 Briarpark Drive
Suite 600
Houston, Texas 77042
Phone 713.953.5200
Fax 713.953.5026
FRN - F-1386

SURVEYED BY: AMANI ENG. | FB NO.: P-5679

CITY OF HOUSTON

DEPARTMENT OF PUBLIC WORKS AND ENGINEERING

ALMEDA SIMS WWTP & SPF IMPROVEMENTS PACKAGE-3

ELECTRICAL STANDARD DETAILS – III

WBS NUMBER	R-000298-0008-4
DRAWING SCALE	NTS
CITY OF HOUSTON, PM	IRAJ RANJBAR, P.E.
SHEET NO.	98 OF 117

PUBLIC WORKS AND ENGINEERING
50431
CITY OF HOUSTON
HOUSTON, TEXAS

DWG: EZ-03

Z:\W814_Houston Almeda Sims WWTP Improvements\Drawings\Electrical\Working\EZ-03.dwg

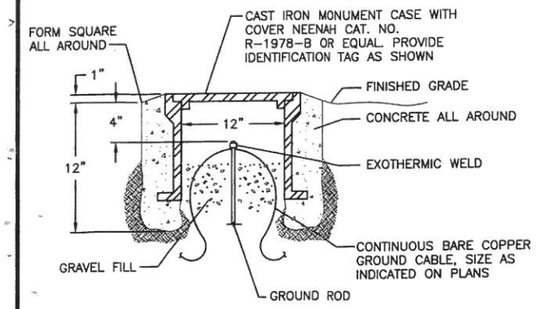

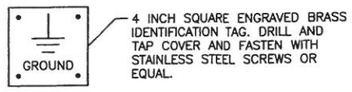

GROUND ROD AND WELL

DETAIL A
NTS

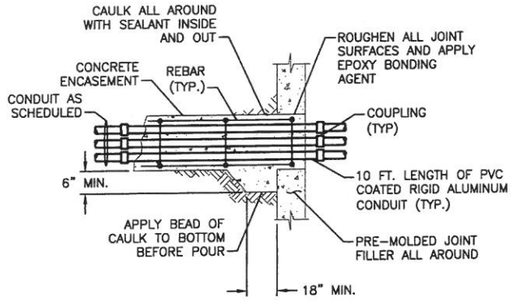

WATERTIGHT DUCT PENETRATION BELOW GRADE STRUCTURES OTHER THAN MANHOLES OR HANDHOLES

DETAIL C
NTS

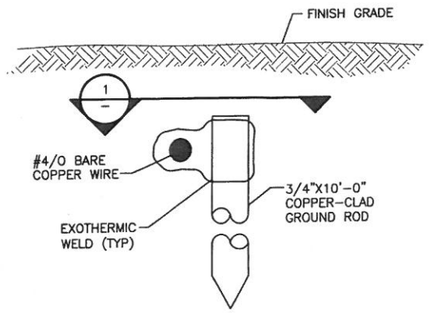

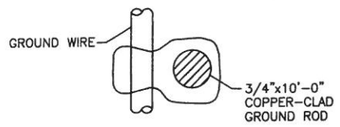

GROUND BUS CONNECTION

SECTION 1
NTS

GROUND BUS CONNECTION TO GROUND ROD

DETAIL B
NTS

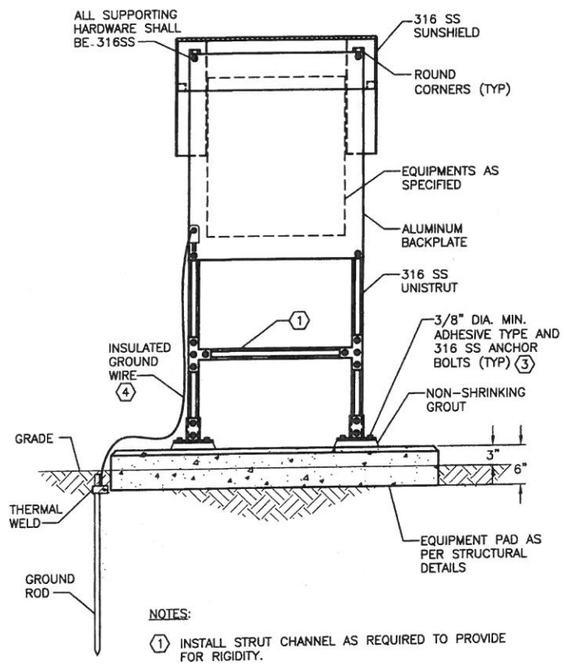

NOTES:

1. INSTALL STRUT CHANNEL AS REQUIRED TO PROVIDE FOR RIGIDITY.
2. PROVIDE CONCRETE PAD IN UNPAVED AREAS. SEE STRUCTURAL PLANS FOR DETAILS.
3. CONTRACTOR WILL BE RESPONSIBLE FOR PROVIDING THE CORRECT SIZE ANCHOR BOLTS ON LOAD. (TYPICAL)
4. SECURE GROUND WIRE TO EQUIPMENT RACK LEG. BOLT GROUND WIRE TO BACKPLATE WITH APPROVED GROUND LUGS.

OUTDOOR MOUNTED SWITCH (UNPAVED AREA)

DETAIL D
NTS

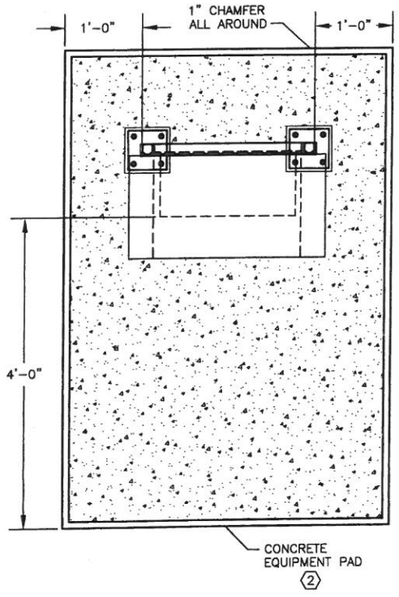

DATE	REVISION	BY

GAI
Gupta & Associates, Inc.
consulting engineering
Registration No. F-2593
7322 Southwest Freeway Suite 410
Houston, Texas 77074
Tel: 713-636-2936
Fax: 713-636-2987
email:hforouzan@gaiconsulting.com

STATE OF TEXAS
H. A. FOROUZAN
77748
REGISTERED PROFESSIONAL ENGINEER
03/15/2013

LJA Engineering Inc.
2929 Briarpark Drive
Suite 600
Houston, Texas 77042
Phone 713.953.5200
Fax 713.953.5026
FRN - F-1386

SURVEYED BY: AMANI ENG. | FB NO.: P-5679

CITY OF HOUSTON
DEPARTMENT OF PUBLIC WORKS AND ENGINEERING

ALMEDA SIMS WWTP & SPF IMPROVEMENTS PACKAGE-3

ELECTRICAL STANDARD DETAILS – IV

WBS NUMBER	R-000298-0008-4
DRAWING SCALE	NTS
CITY OF HOUSTON, PM	IRAJ RANJBAR, P.E.
SHEET NO.	99 OF 117

PUBLIC WORKS & ENGINEERING
50431
CITY OF HOUSTON, TEXAS

DWG: EZ-04

V:\814_Houston Almeda Sims WWTP Improvement\Drawings\Electrical\Working\EZ-04.dwg

GENERAL INSTRUMENT OR FUNCTION SYMBOLS

	PRIMARY LOCATION NORMALLY ACCESSIBLE TO OPERATOR **	FIELD MOUNTED	AUXILIARY LOCATION NORMALLY ACCESSIBLE TO OPERATOR **
DISCRETE INSTRUMENTS	⊖	○	⊖
SHARED DISPLAY, SHARED CONTROL	▭	▢	▭
COMPUTER FUNCTION	⬡	⬡	⬡
PROGRAMMABLE LOGIC CONTROL	◇	◇	◇

** NORMALLY INACCESSIBLE OR BEHIND–THE–PANEL DEVICES OR FUNCTIONS MAY BE DEPICTED BY USING THE SAME SYMBOL BUT WITH DASHED HORIZONTAL BARS, i.e.: ⊖ ◇

FUNCTION SYMBOLS AND ABBREVIATIONS

- K PROPORTIONAL GAIN OR ATTENUATE (INPUT:OUTPUT)
- –K REVERSE PROPORTIONAL GAIN OR ATTENUATE (INPUT:OUTPUT)
- Σ SUMMING
- Σ/n AVERAGING
- Δ SUBTRACTING
- √ EXTRACT SQUARE ROOT
- ÷ DIVIDE
- X MULTIPLY
- ∫ INTEGRATE
- \+ BIAS POSITIVE
- – BIAS NEGATIVE
- F(x) NONLINEAR OR UNSPECIFIED FUNCTION
- > HIGH SELECT
- < LOW SELECT
- ⊦ HIGH LIMIT
- ⊥ LOW LIMIT
- */* SIGNAL TRANSDUCER OR CONVERTER (INPUT/OUTPUT)
  * DEFINED AS FOLLOWS:
  - E – VOLTAGE
  - I – CURRENT
  - P – PNEUMATIC
  - PD – PULSE DURATION
  - H – HYDRAULIC
  - O – ELECTROMAGNETIC, SONIC
  - R – RESISTANCE (ELECTRIC)

SIGNAL CONVERTER/ ISOLATOR

SURGE SUPPRESSOR

OPTO ISOLATOR

INSTRUMENTS SHARING COMMON HOUSING

EXISTING EQUIPMENT (SHOWN LIGHTENED)

I2 — CONTROL INTERLOCK FUNCTION, SOFTWARE OR HARDWIRED. SEE DESCRIPTION PROVIDED, ELECTRICAL SCHEMATIC, AND/OR SYSTEM SPECIFICATIONS FOR SPECIFIC FUNCTION. DETAIL NUMBER IF USED

DIGITAL SYSTEM I/O INTERFACE. DIRECTION OF TRIANGLE DENOTES WHETHER INPUT OR OUTPUT
- NUMBER DENOTES NUMBER OF I/O'S
- LETTER DENOTES SIGNAL TYPE. THE LETTER "A" DENOTES AN ANALOG SIGNAL. THE LETTER "D" DENOTES A DISCRETE SIGNAL

TYPICAL TAG NUMBERS & DESIGNATION

XXXX — TYPICAL EQUIPMENT NUMBER

XXXX — TYPICAL LOOP NUMBER

AE / *A / CL_2
- ADDITIONAL INSTRUMENT IDENTIFICATION SEE GENERAL ABBREVIATIONS
- WHEN USED, LETTER DISTINGUISHES BETWEEN MULTIPLE, SIMILAR DEVICES IN THE SAME INSTRUMENT LOOP.
- WHEN USED, NUMBER DENOTES DEVICES IN IDENTICAL DUPLICATE SYSTEMS

PROCESS DEVICE SYMBOLS

- DIAPHRAGM SEAL
- ANNULAR TYPE SEAL
- PRIMARY ELEMENT MAGNETIC FLOW METER
- PRIMARY ELEMENT ULTRASONIC FLOW METER
- PRIMARY ELEMENT TIME TRANSIT FLOW METER
- PRIMARY ELEMENT VENTURI TUBE
- FLOAT SWITCH
- PRIMARY ELEMENT PARSHALL FLUME OR TRAPEZOIDAL FLUME
- PRIMARY ELEMENT ORIFICE PLATE
- PRIMARY ELEMENT WEIR FLOW METER
- PRIMARY ELEMENT TURBINE OR PROPELLER TYPE METER
- THERMAL FLOWMETER
- PRIMARY ELEMENT ROTAMETER
- PRIMARY ELEMENT PITOT TUBE
- CHEMICAL INJECTION POINT
- DRAIN
- STRAINER
- CONDUCTIVE LEVEL PROBE
- MOTOR – ELECTRIC/ HYDRAULIC/PNEUMATIC (ARROW DENOTES VARIABLE)
- PRIMARY ELEMENT ULTRASONIC LEVEL TRANSDUCER
- BUBBLER LEVEL TUBE ELEMENT
- PRIMARY ELEMENT RADAR LEVEL TRANSDUCER
- PRIMARY ELEMENT PRESSURE PROBE LEVEL TRANSMITTER
- NORMAL OPERATING LEVEL
- FLOW STRAIGHTENER
- LOAD CELL
- UV CHAMBER
- FEED PUMP

- GRINDER
- SPRAY NOZZLE
- BLIND FLANGE
- FLANGE
- VALVE – GLOBE OR OTHER IN–LINE TYPE NOT OTHERWISE IDENTIFIED
- DIAPHRAGM VALVE
- BALL VALVE
- REGULATED SIDE — SELF CONTAINED PRESSURE REGULATOR
- SOLENOID ACTUATED VALVE
- ELECTRICAL ACTUATED VALVE
- BUTTERFLY VALVE
- CHECK VALVE WITH FLOW DIRECTION AS INDICATED
- PLUG VALVE
- FLOW CONTROL GATE OR GATE VALVE
- MOTORIZED GATE VALVE
- CENTRIFUGAL BLOWER
- CENTRIFUGAL PUMP
- POSITIVE DISPLACEMENT PUMP
- PROGRESSIVE CAVITY PUMP
- SUBMERSIBLE PUMP
- MIXER OR FLOCCULATOR
- VERTICAL PUMP
- SUBMERSIBLE MIXER
- COMPRESSOR
- HEAT EXCHANGER

GENERAL ABBREVIATIONS

AI	ANALOG INPUT
AFD	ADJUSTABLE FREQUENCY DRIVE
AL	ALARM PILOT LIGHT
AO	ANALOG OUTPUT
AS	AIR SUPPLY
BFV	BUTTERFLY VALVE
CL2	CHLORINE
COND	CONDUCTIVITY
COMP	COMPUTER
CP	CONTROL PANEL
CRC	CONTROL ROOM CONSOLE
CR	CHLORINE RESIDUAL
CTU	CENTRAL TELEMETRY UNIT
DCU	DISTRIBUTED CONTROL UNIT
DI	DIGITAL OR DISCRETE INPUT
DO	DISSOLVED OXYGEN OR DIGITAL OUTPUT
DPU	DISTRIBUTED PROCESSING UNIT
ETM	ELAPSED TIME METER
ES	EMERGENCY STOP
FC	FAIL CLOSED
FCP	FIELD CONTROL PANEL
FCS	FILTER CONTROL STATION
FCV	FLOW CONTROL VALVE
FLP	FAIL LAST POSITION
FO	FAIL OPEN
H2S	HYDROGEN SULFIDE
HMI	HUMAN MACHINE INTERFACE
JB	JUNCTION BOX
IO	INPUT/OUTPUT
IR	INFARED
ISS	INSTRUMENT SYSTEM SUPPLIER
LAS	LIQUID AMMONIA SULFATE
LCP	LOCAL CONTROL PANEL
LCS	LOCAL CONTROL STATION
LPU	LOCAL PROCESSING UNIT
LTS	LOCAL TERMINAL SYSTEM
MC	MOTOR CONTROLLER
MHWT	MOTOR HEATER WINDING TEMPERATURE
NAOCL	SODIUM HYPOCHLORIDE
NC	NORMALLY CLOSED
NIM	NETWORK INTERFACE MODULE
NO	NORMALLY OPEN
MM	MULTI MODE FIBER OPTIC CABLE
MMI	MAN MACHINE INTERFACE
OIT	OPERATIONS INTERFACE TERMINAL
OL	OVERLOAD
OLR	OVERLOAD RELAY
OWS	OPERATOR WORKSTATION
PB	PUSH BUTTON
pH	HYDROGEN ION
PLC	PROGRAMMABLE LOGIC CONTROLLER
POLM	POLYMER
PS	POWER SUPPLY
PV	PINCH VALVE
RBC	REMOTE BASE CONTROLLER
RIO	REMOTE INPUT OUTPUT
RTU	REMOTE TERMINAL UNIT
SM	SINGLE MODE FIBER OPTIC CABLE
SO2	SULFUR DIOXIDE
SOL	SOLENOID
SPD	SPEED PROTECTION DEVICE
TURB	TURBIDITY
VIB	VIBRATION
VFD	VARIABLE FREQUENCY DRIVE

VALVE ACTUATOR SYMBOLS

ACTUATOR TYPE

V	VARIABLE POSITION
F	FULL ON/OFF POSITION

AUTOMATIC POSITIONER

P	AIR CYLINDER
O	OIL CYLINDER
H	HYDRAULIC CYLINDER
M	ELECTRIC MOTOR

SYSTEM ARCHITECTURE COMMUNICATIONS TYPES

- ETHERNET 10/100BASE–T
- FIBER 100BASE–FX MULTIMODE
- FIBER 1000BASE–X MULTIMODE
- T1 1.5 MPBS
- MODBUS
- MODBUS PLUS
- RS 485

MEANINGS OF IDENTIFICATION LETTERS

THIS TABLE APPLIES ONLY TO THE FUNCTIONAL IDENTIFICATION OF INSTRUMENTS.

	FIRST LETTER		SUCCEEDING LETTERS		
	MEASURED OR INITIATING VARIABLE	MODIFIER	READOUT OR PASSIVE FUNCTION	OUTPUT FUNCTION	MODIFIER
A	ANALYSIS		ALARM		
B	BURNER, COMBUSTION				
C	CONDUCTIVITY			CONTROL	
D	DENSITY (MASS) OR SPECIFIC GRAVITY	DIFFERENTIAL			
E	VOLTAGE (EMF)		PRIMARY ELEMENT		
F	FLOW RATE	RATIO (FRACTION)			
G	GAUGING (DIMENSIONAL)		GLASS VIEWING DEVICE		
H	HAND				HIGH OR OPEN
I	CURRENT (ELECTRICAL)		INDICATE		
J	POWER	SCAN			
K	TIME OR TIME SCHEDULE			CONTROL STATION	
L	LEVEL		LIGHT (PILOT)		LOW OR CLOSED
M	MOISTURE OR HUMIDITY				MIDDLE OR INTERMEDIATE
N	USERS CHOICE		USER'S CHOICE		USER'S CHOICE
O	USER'S CHOICE		ORIFICE (RESTRICTION)		
P	PRESSURE OR VACUUM		POINT (TEST CONNECTION)		
Q	QUANTITY	INTEGRATE OR TOTALIZE			
R	RADIATION		RECORD		
S	SPEED OR FREQUENCY	SAFETY		SWITCH	
T	TEMPERATURE			TRANSMIT	
U	MULTIVARIABLE		MULTIFUNCTION	MULTIFUNCTION	MULTIFUNCTION
V	VIBRATION			VALVE, DAMPER OR LOUVER	
W	WEIGHT OR FORCE		WELL		UNCLASSIFIED
X	UNCLASSIFIED	X AXIS	UNCLASSIFIED	UNCLASSIFIED	UNCLASSIFIED
Y	EVENT, STATE	Y AXIS		RELAY, COMPUTE, CONVERT	
Z	POSITION, DIMENSION	Z AXIS		DRIVE, ACTUATE OR UNCLASSIFIED CONTROL ELEMENT	

LINE SYMBOLS:

- MAJOR PROCESS PIPING, FLOW CHANNEL OR DATA HIGHWAY WITH FLOW OR SIGNAL DIRECTION AS SHOWN
- MINOR PROCESS PIPING DIRECTION AS SHOWN WITH FLOW
- FUTURE PIPING
- EXISTING PIPING (SHOWN LIGHTENED)
- ELECTRIC/ELECTRONIC SIGNAL WITH SIGNAL DIRECTION AS SHOWN
- HYDRAULIC SIGNAL
- SOFTWARE SIGNAL LINK
- PNEUMATIC SIGNAL
- CAPILLARY TUBE OR FILLED SYSTEM SIGNAL
- ELECTROMAGNETIC OR SONIC SIGNAL
- DESCRIPTION SHEET# A — PROCESS/SIGNAL LINE CONTINUED AT/FROM ANOTHER LOCATION (MATCH LETTERS)
- DESCRIPTION A — PROCESS/SIGNAL LINE CONTINUED AT/FROM ANOTHER LOCATION NOT INCLUDED IN THE SET
- DESCRIPTION SHEET# — PRESSURE REGULATING VALVE CHEMICAL INJECTION POINT TO ANOTHER LOCATION
- FOR PRESSURE RELIEF OR SAFETY VALVES ONLY
- OR NO SYMBOL — MANUALLY (HAND) OPERATED

HAND SWITCH ABBREVIATIONS:

HOA	HAND/OFF/AUTO
HOR	HAND/OFF/REMOTE
LOC	LOCAL/OFF/COMPUTER
LOR	LOCAL/OFF/REMOTE
LOS	LOCKOUT STOP
OSC	OPEN/STOP/CLOSE
RSL	RAISE/STOP/LOWER
L/C	LOCAL/COMPUTER
L/R	LOCAL/REMOTE
O/C	OPEN/CLOSE
S/S	START/STOP
A/M	AUTO/MANUAL
H/C	HAND/COMPUTER

GENERAL NOTES:

1. THIS IS A GENERAL LEGEND SHEET, SOME SYMBOLS AND ABBREVIATIONS MAY NOT APPLY TO THIS SPECIFIC PROJECT.
2. THIS LEGEND APPLIES TO INSTRUMENTATION DIAGRAMS ONLY AND MAY DIFFER FROM LEGENDS FOR OTHER SHEETS.
3. IN GENERAL THIS LEGEND SHEET AND THE INSTRUMENTATION DIAGRAMS ARE BASED ON INSTRUMENT SOCIETY OF AMERICA, STANDARDS FOR PRACTICES FOR INSTRUMENTATION, STANDARD S5.1 SOME MODIFICATIONS, ADDITIONS AND ALTERATIONS HAVE BEEN MADE AS REQUIRED TO ACCOMMODATE THE PROJECT REQUIREMENTS.
4. SOME PROCESS ITEMS, SUCH AS EQUIPMENT ISOLATION VALVES, BYPASS LINES, ETC., WHICH ARE NOT CRITICAL FOR AN UNDERSTANDING OF THE INSTRUMENTATION AND CONTROL FUNCTIONS ARE NOT SHOWN ON THE INSTRUMENTATION SHEETS.
5. SEE ELECTRICAL SHEETS AND SPECIFICATIONS FOR ADDITIONAL CONTROL AND INTERLOCK REQUIREMENTS FOR EQUIPMENT NOT SHOWN OR NOT PROVIDED BY THE INSTRUMENTATION SUPPLIER.
6. IN THE EVENT OF DISCREPANCY BETWEEN THE PROCESS & INSTRUMENTATION DIAGRAMS AND THE LOOP DIAGRAMS, THE INFORMATION FROM THE LOOP DIAGRAMS SHALL BE USED.

DWG: I–01

DATE	REVISION	BY

GAI
Gupta & Associates, Inc.
consulting engineering
Registration No. F-2593
13626 Gamma Road
Dallas, Texas 75244
Tel: 972-490-7661
Fax: 972-490-7125
email: vlg@gaiconsulting.com

03/15/2013

STATE OF TEXAS — H. A. FOROUZAN — 77748 — REGISTERED PROFESSIONAL ENGINEER

LJA Engineering Inc.
2929 Briarpark Drive
Suite 600
Houston, Texas 77042
Phone 713.953.5200
Fax 713.953.5026
FRN - F-1386

SURVEYED BY: AMANI ENG. | FB NO.: P–5679

CITY OF HOUSTON

DEPARTMENT OF PUBLIC WORKS AND ENGINEERING

ALMEDA SIMS WWTP & SPF IMPROVEMENTS PACKAGE–3

INSTRUMENTATION LEGEND AND SYMBOLS

WBS NUMBER	R–000298–0008–4
DRAWING SCALE	NTS
CITY OF HOUSTON, PM	IRAJ RANJBAR, P.E.
SHEET NO.	100 OF 117

PUBLIC WORKS AND ENGINEERING — 50431 — HOUSTON, TEXAS

Z:\V814_Houston Almeda Sims WWTP Improvement\Drawings\Instrumentation and Control\Working\I–01.dwg

NOTES:

1. A NEW PANEL SHALL REPLACE THE EXISTING.
2. REFER TO SHEET I-09.
3. REFER TO SHEET I-03.
4. REFER TO SHEET I-05.

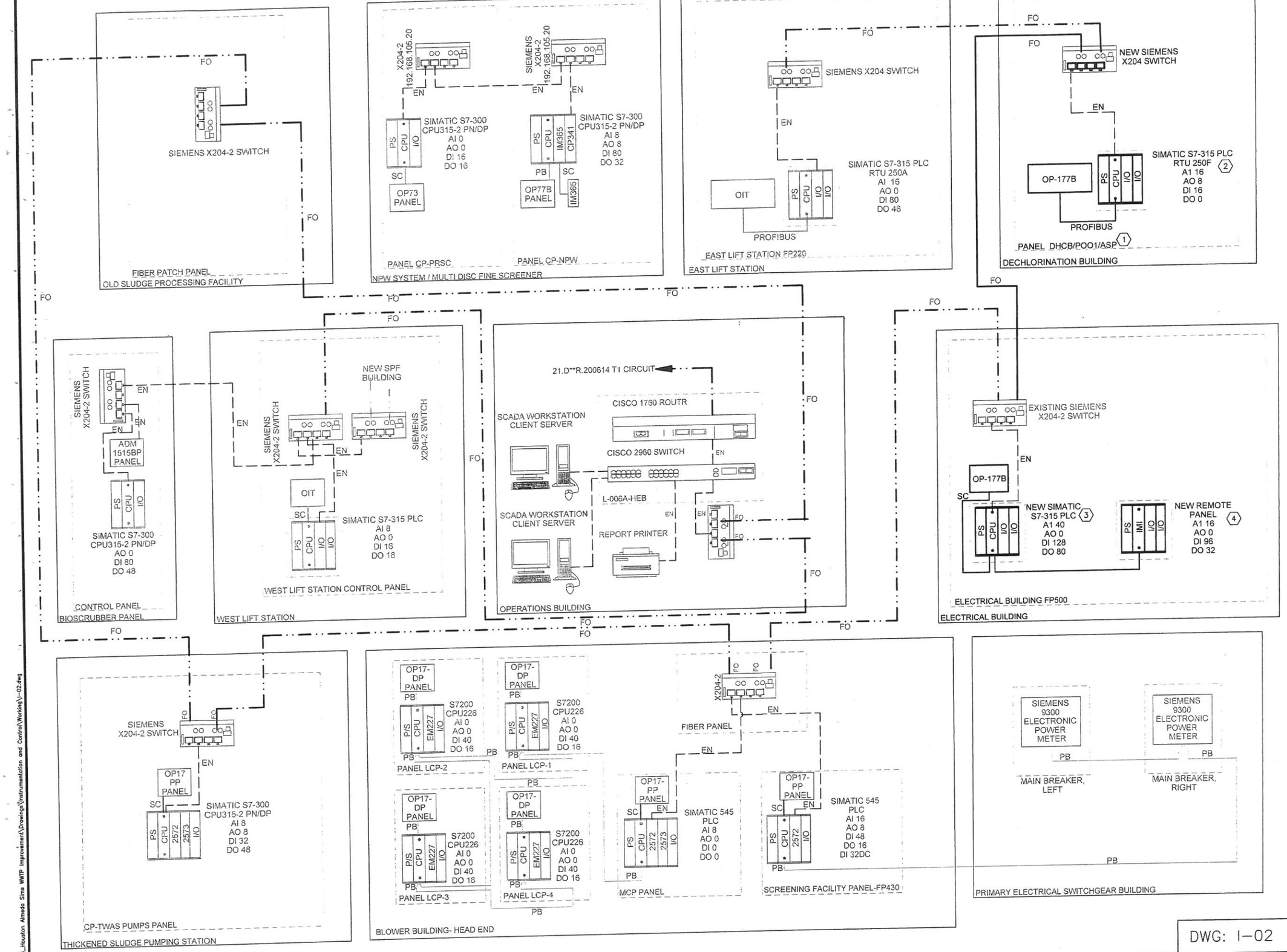

DATE	REVISION	BY

GAI
Gupta & Associates, Inc.
consulting engineering
Registration No. F-2593
13626 Gamma Road
Dallas, Texas 75244
Tel. 972-490-7661
Fax. 972-490-7135
email: vkg@gaiconsulting.com

H. A. FOROUZAN
77748
REGISTERED PROFESSIONAL ENGINEER
STATE OF TEXAS
03/15/2013

LJA Engineering Inc.
2929 Briarpark Drive
Suite 600
Houston, Texas 77042
Phone 713.953.5200
Fax 713.953.5026
FRN - F-1386

SURVEYED BY: AMANI ENG. | FB NO.: P-5679

CITY OF HOUSTON

DEPARTMENT OF PUBLIC WORKS AND ENGINEERING

ALMEDA SIMS WWTP & SPF IMPROVEMENTS PACKAGE-3

LOGICAL NETWORK DIAGRAM

WBS NUMBER	R-000298-0008-4
DRAWING SCALE	NTS
CITY OF HOUSTON, PM	IRAJ RANJBAR, P.E.
SHEET NO.	101 OF 117

DWG: I-02

PUBLIC WORKS AND ENGINEERING
50454

Z:\VH814_Houston Almeda Sims WWTP Improvement\Drawings\Instrumentation and Control\Working\I-02.dwg

101

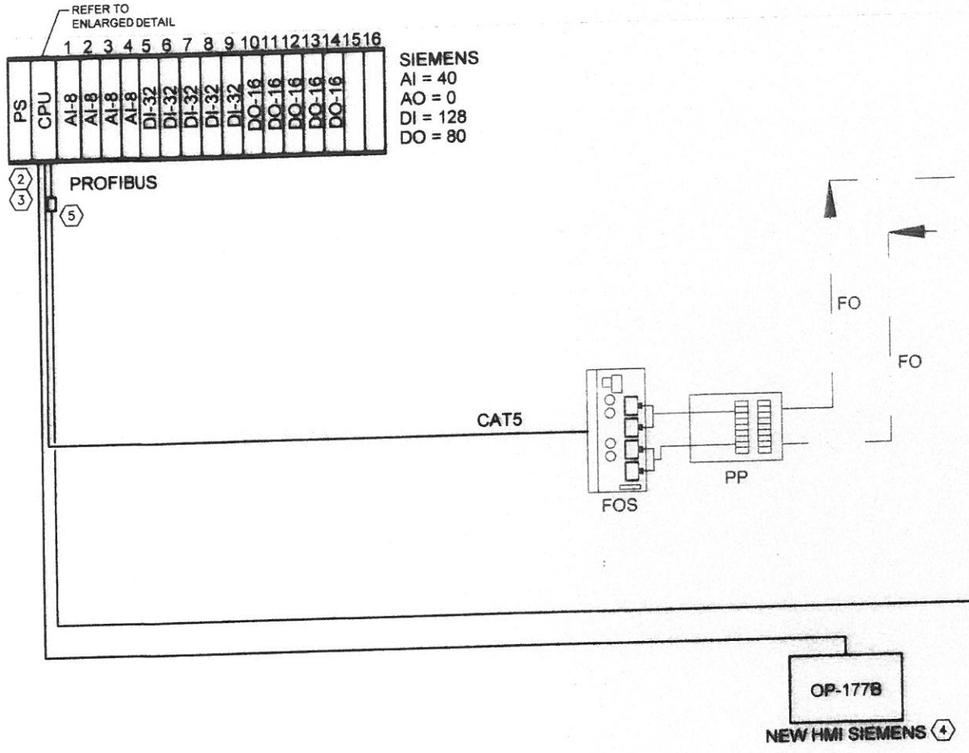

NOTES:

1. ALL SCUM PUMPS, MIXERS, SKIMMER, AND POST AERATION SIGNAL SHALL BE HARDWIRED TO THE NEW REMOTE I/O MODULES INSTALLED IN MCC-4 BUILDING.
2. THE CONTRACTOR SHALL DEMOLISH THE EXISTING SIEMENS PLC IN FP-500 PANEL WITH ALL THE EXISTING I/O AND RETURN THEM TO THE OWNER. THE CONTRACTOR SHALL REPLACE THE EXISTING PLC WITH SIEMENS S7-300 SERIES.
3. THE CONTRACTOR SHALL CREATE AND UPDATE A NEW PLC PROGRAM TO INCLUDE ALL THE NEW REMOTE RACK POINTS.
4. THE CONTRACTOR SHALL CREATE AND UPDATE THE NEW OIT GRAPHICS PROGRAM.
5. THE CONTRACTOR SHALL INSTALL A PROFIBUS SURGE PROTECTOR.

LEGEND:

FOS – FIBER OPTIC SWITCH
PP – PATCH PANEL
FO – FIBER OPTIC CABLE
CAT5 – CATEGORY 5 COPPER CABLE

ELECTRICAL BUILDING FP-500

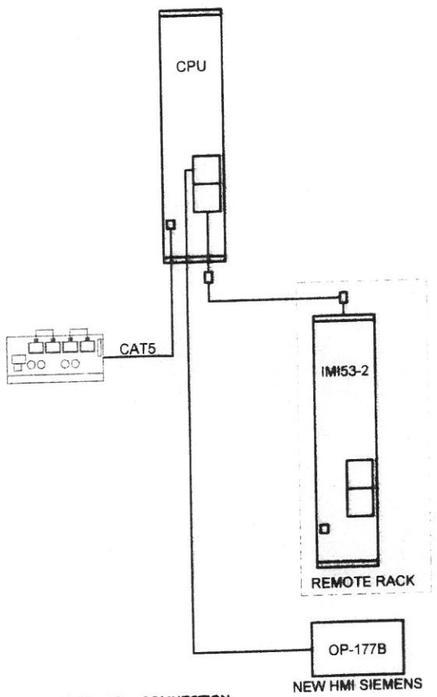

ENLARGED CPU CONNECTION
DETAIL 1 / NTS

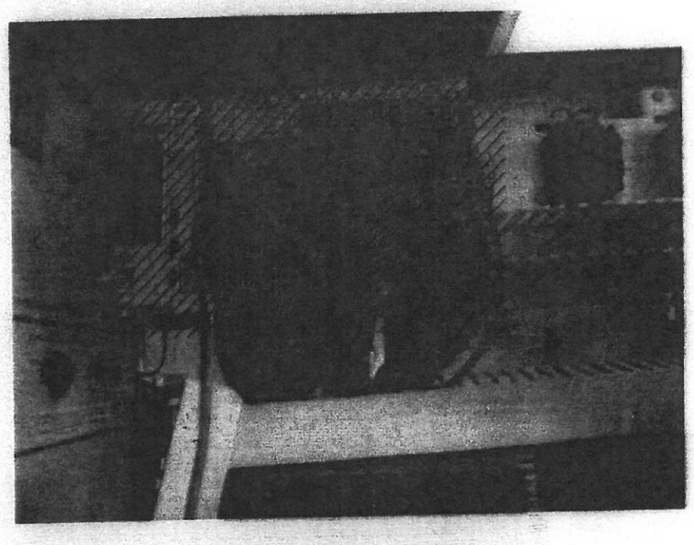

ELECTRICAL BUILDING FP-500
EXISTING PLC
PHOTO 2

DATE	REVISION	BY

GAI
Gupta & Associates, Inc.
consulting engineering
Registration No. F-2593
13626 Gamma Road
Dallas, Texas 75244
Tel: 972-490-7661
Fax: 972-490-7125
email: vkg@gaiconsulting.com

03/15/2013

STATE OF TEXAS
H. A. FOROUZAN
77748
REGISTERED PROFESSIONAL ENGINEER

LJA Engineering Inc.
2929 Briarpark Drive
Suite 600
Houston, Texas 77042
Phone 713.953.5200
Fax 713.953.5026
FRN - F-1386

SURVEYED BY: AMANI ENG. | FB NO.: P-5679

CITY OF HOUSTON
DEPARTMENT OF PUBLIC WORKS AND ENGINEERING

ALMEDA SIMS WWTP & SPF IMPROVEMENTS PACKAGE-3

ELECTRICAL BUILDING FP-500 PLC ENCLOSURE

WBS NUMBER	R-000298-0008-4
DRAWING SCALE	NTS
CITY OF HOUSTON, PM	IRAJ RANJBAR, P.E.
SHEET NO.	102 OF 117

PUBLIC WORKS ENGINEERING
50431

DWG: I-03

Z:\1814_Houston Almeda Sims WWTP Improvement\Drawings\Instrumentation and Control\Working\I-03.dwg

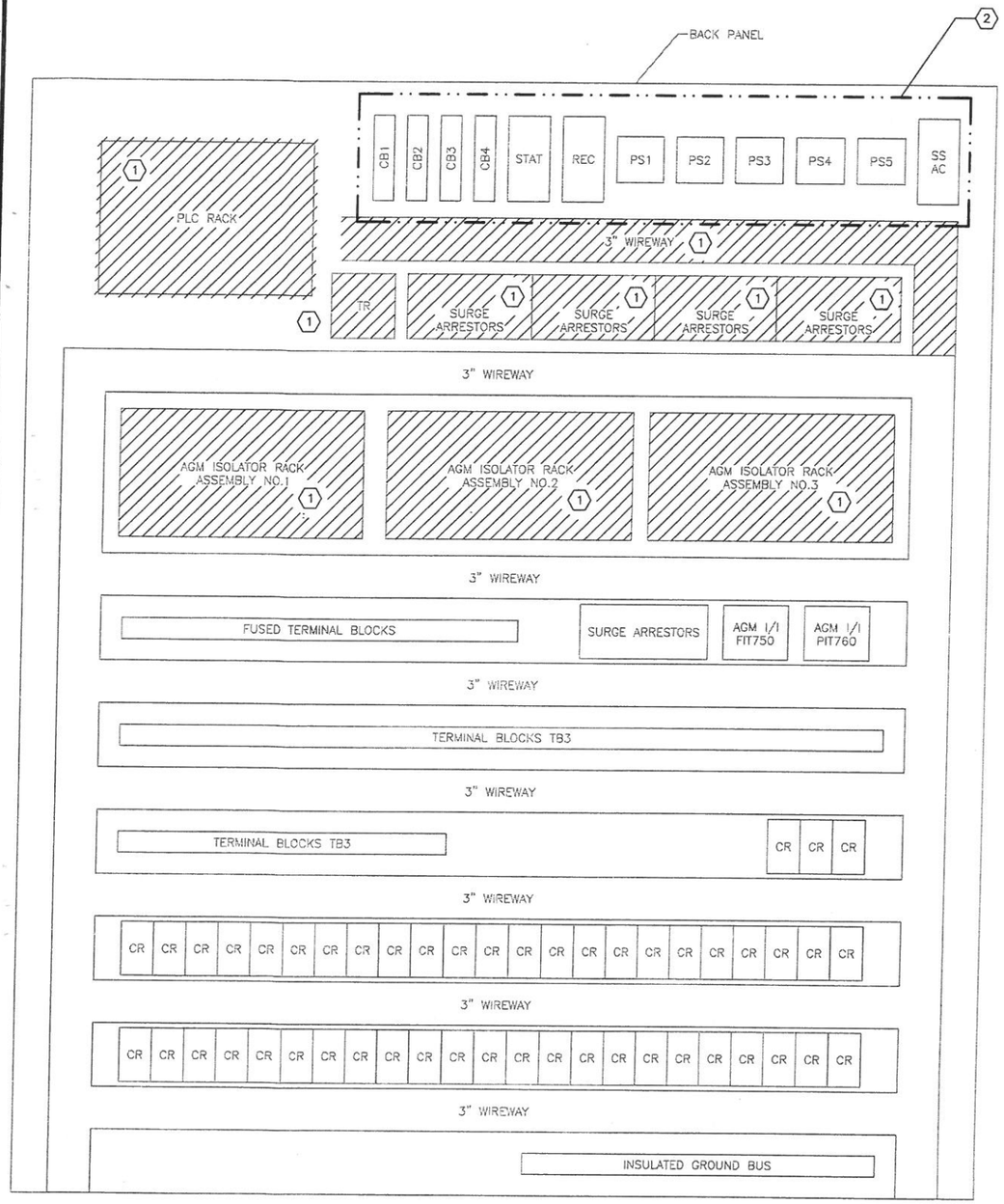

ELECTRICAL BUILDING PANEL FP-500
DEMOLITION

DETAIL 1 / –
NTS

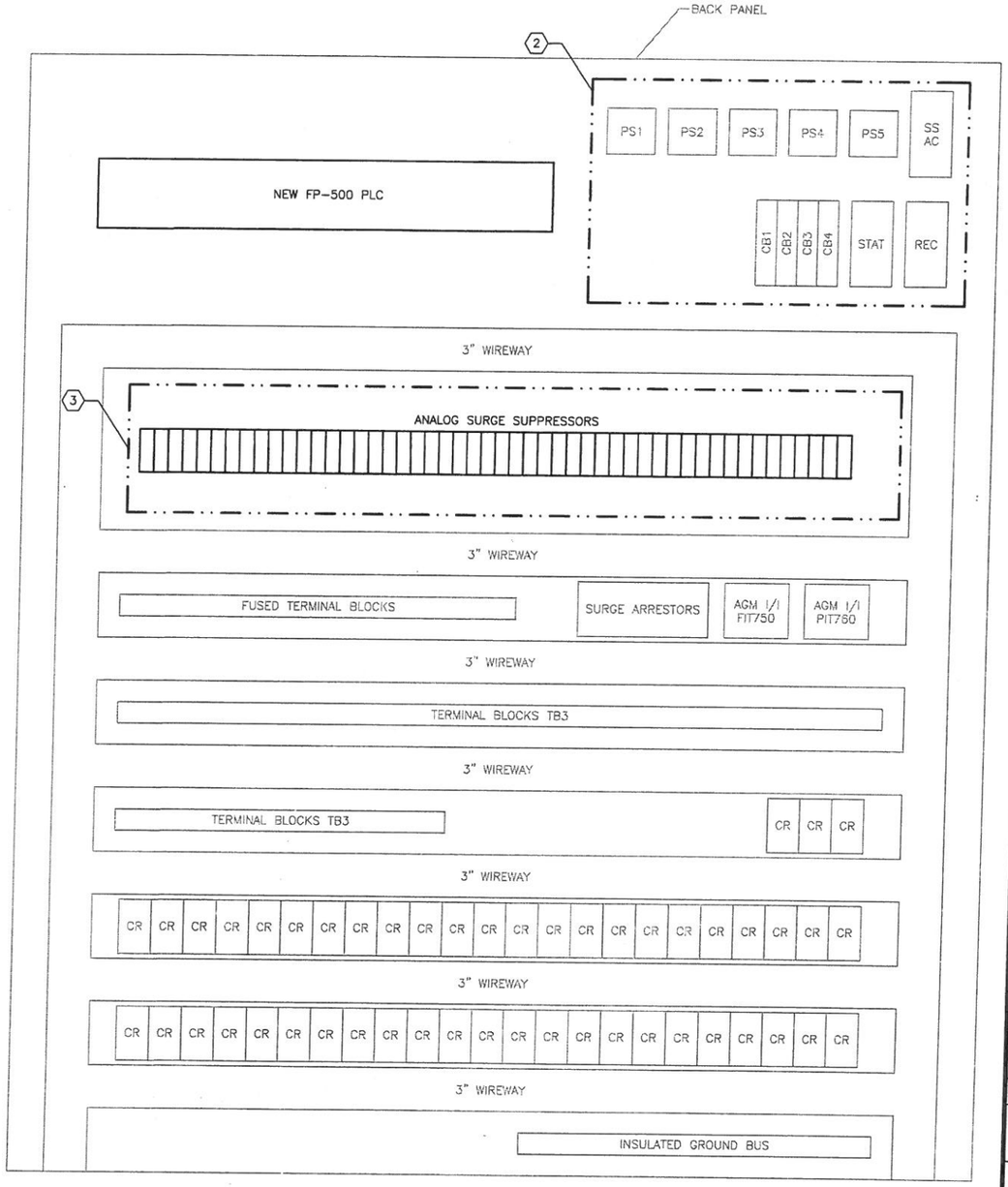

ELECTRICAL BUILDING PANEL FP-500
MODIFICATION

DETAIL 2 / –
NTS

NOTES:

1. THE CONTRACTOR SHALL DEMOLISH THESE DEVICES AND RETURN THEM TO THE OWNER.
2. THESE DEVICES SHALL BE REARRANGED TO THE PROPOSED LOCATION IN THE MODIFICATION LAYOUT.
3. CONTRACTOR SHALL INSTALL ANALOG SURGE SUPPRESSORS FOR EVERY ANALOG POINT.

DATE	REVISION	BY

GAI
Gupta & Associates, Inc.
consulting engineering
Registration No. F-2593
13636 Gamma Road
Dallas, Texas 75244
Tel: 972-490-7661
Fax: 972-490-7125
email: vkg@gaiconsulting.com

03/15/2013

STATE OF TEXAS
H. A. FOROUZAN
77748
REGISTERED PROFESSIONAL ENGINEER

LJA Engineering Inc.
2929 Briarpark Drive
Suite 600
Houston, Texas 77042
Phone 713.953.5200
Fax 713.953.5026
FRN - F-1386

SURVEYED BY: AMANI ENG. | FB NO.: P-5679

CITY OF HOUSTON
DEPARTMENT OF PUBLIC WORKS AND ENGINEERING

ALMEDA SIMS WWTP & SPF IMPROVEMENTS PACKAGE-3

PANEL FP-500 DEMOLITION & MODIFICATION DETAIL

WBS NUMBER	R-000298-0008-4
DRAWING SCALE	NTS
CITY OF HOUSTON, PM	IRAJ RANJBAR, P.E.
SHEET NO.	103 OF 117

PUBLIC WORKS & ENGINEERING
50431

DWG: I-04

Z:\1814_Houston Almeda Sims WWTP Improvement\Drawings\Instrumentation and Control\Working\I-04.dwg

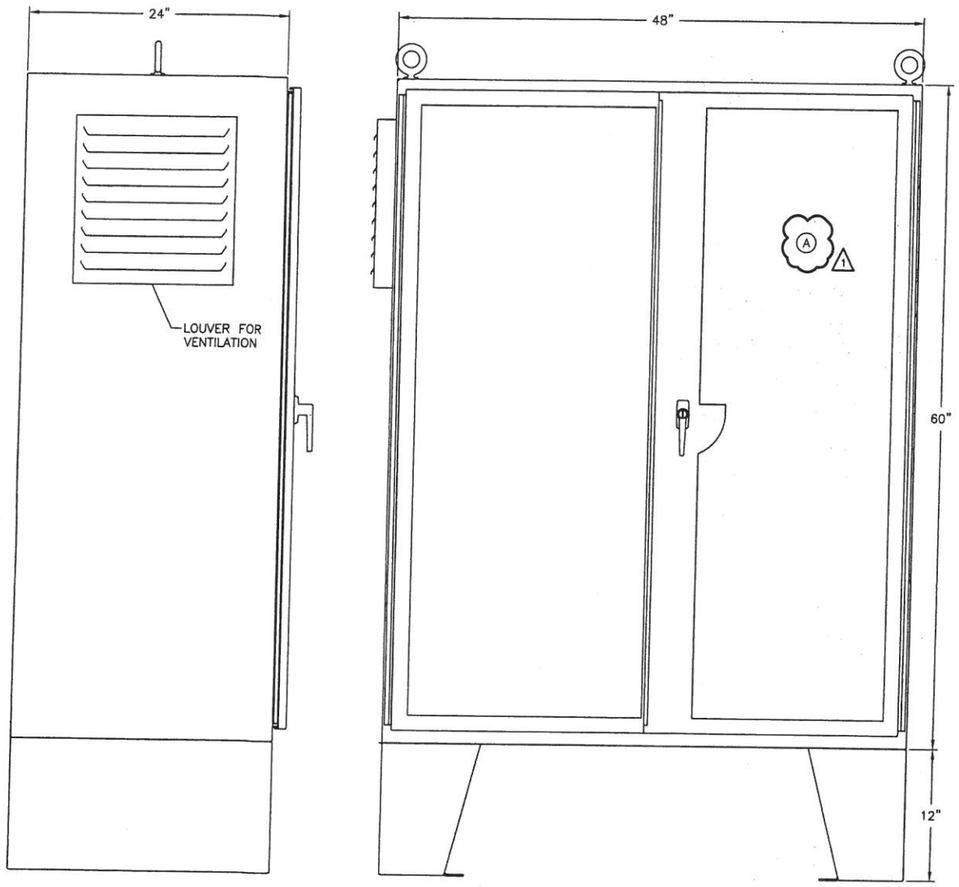

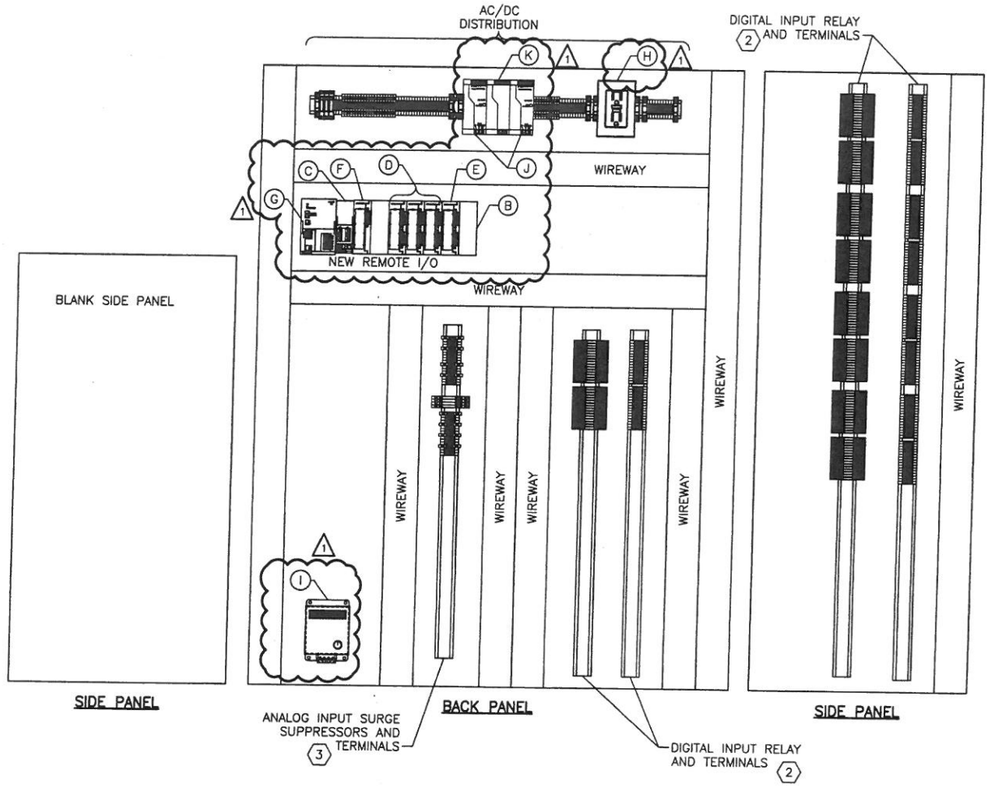

NOTES:

1. CONTRACTOR SHALL TERMINATE ALL FIELD WIRING TO TERMINALS.
2. CONTRACTOR SHALL ISOLATE DIGITAL INPUTS/OUTPUTS FROM PLC/RIO WITH RELAYS.
3. CONTRACTOR SHALL RUN ALL ANALOG SIGNALS THROUGH SURGE SUPPRESSORS.
4. ALL FIELD WIRING SHALL BE ISOLATED FROM INTERNAL WIRING.

PLC FP-500 REMOTE PANEL LAYOUT (1)(4)

DETAIL 1 / NTS

EQUIPMENT & DEVICE SCHEDULE (1)

ITEM	QUANTITY	DESCRIPTION
A	1	60"x48"x24" TWO DOORS, SINGLE ACCESS PANEL. FLOOR STANDING 14 GAUGE STEEL NEMA 12 ENCLOSURE, WITH 12 GAUGE STEEL BACK PANEL – HOFFMAN
B	1	19" MOUNTING RAIL – SIEMENS: 8ES7390–1AE80–0AA0
C	1	REMOTE I/O – INTERFACE MODULE SM–361: 6ES7–361–3CA01–A
D	3	24VDC 16 CHANNEL DIGITAL INPUT MODULE – SIEMENS 6ES7–331–7KF02–3211BH02–0AA0
E	1	16 CHANNEL 24/48VDC DIGITAL OUTPUT MODULE: 6ES–322–8BH01–A
F	1	8–POINTS ANALOG INPUT MODULE – SIEMENS: 6ES7–331–7KF02–A
G	1	S7 POWER SUPPLY W/ 120VAC INPUT AND 24VDC OUTPUT RATED 5A – SIEMENS: 6ES7–307–1EA00–0AA0
H	1	DUPLEX RECEPTACLE 120VAC, 20A, 2 WIRE, GROUNDED GFCI TYPE – HUBBEL GF5362IA
I	1	120VAC SURGE PROTECTION WITH DRY RELAY CONTACTS – SURGE SUPPRESSION, INC.: 50LA1P1C
J	2	120VAC – 24VDC LOOP POWER SUPPLY RATED 5 AMPS W/ ASSEMBLY ADAPTER FOR S7–300 DIN RAIL PHOENIX CONTACT – QUINT: PS100–24AC/24DC/5
K	1	PHOENIX CONTACT 24VDC DIODE

DATE	REVISION	BY
04–24–13	ADDENDUM NO.1	FA

GAI
Gupta & Associates, Inc.
consulting engineering
Registration No. F-2593
7322 Southwest Freeway, Suite 410
Houston, Texas 77074
Tel: 713-636-2936
Fax: 713-636-2987
email: hforouzan@gaiconsulting.com

H. A. FOROUZAN
77748
REGISTERED PROFESSIONAL ENGINEER
STATE OF TEXAS
03/15/2013

LJA Engineering Inc.
2929 Briarpark Drive
Suite 600
Houston, Texas 77042
Phone 713.953.5200
Fax 713.953.5026
FRN - F-1386

SURVEYED BY: AMANI ENG. | FB NO.: P–5679

CITY OF HOUSTON
DEPARTMENT OF PUBLIC WORKS AND ENGINEERING

ALMEDA SIMS WWTP & SPF IMPROVEMENTS PACKAGE–3

PLC FP–500 NEW REMOTE RACK PANEL LAYOUT DETAIL (MCC–4)

WBS NUMBER	R–000298–0008–4
DRAWING SCALE	NTS
CITY OF HOUSTON, PM	IRAJ RANJBAR, P.E.
SHEET NO. 104 OF 117	

PARK ANSARI 50431 REGISTERED

DWG: I–05

ADDENDUM NO.1

ORIGINAL SCALE IN INCHES

Z:\H8140_Houston Almeda Sims WWTP Improvement\Construction Phase\Addenda\Addendum No.1\I–05.dwg

NOTES:

1. CONTRACTOR SHALL INSTALL SPD FOR THE ANALOG SIGNALS AND CURRENT TO CURRENT CONVERTER. REFER TO INSTALLATION DETAILS O SHEET IZ-01.
2. THE PANELS ARE PROVIDED BY THE MANUFACTURER.

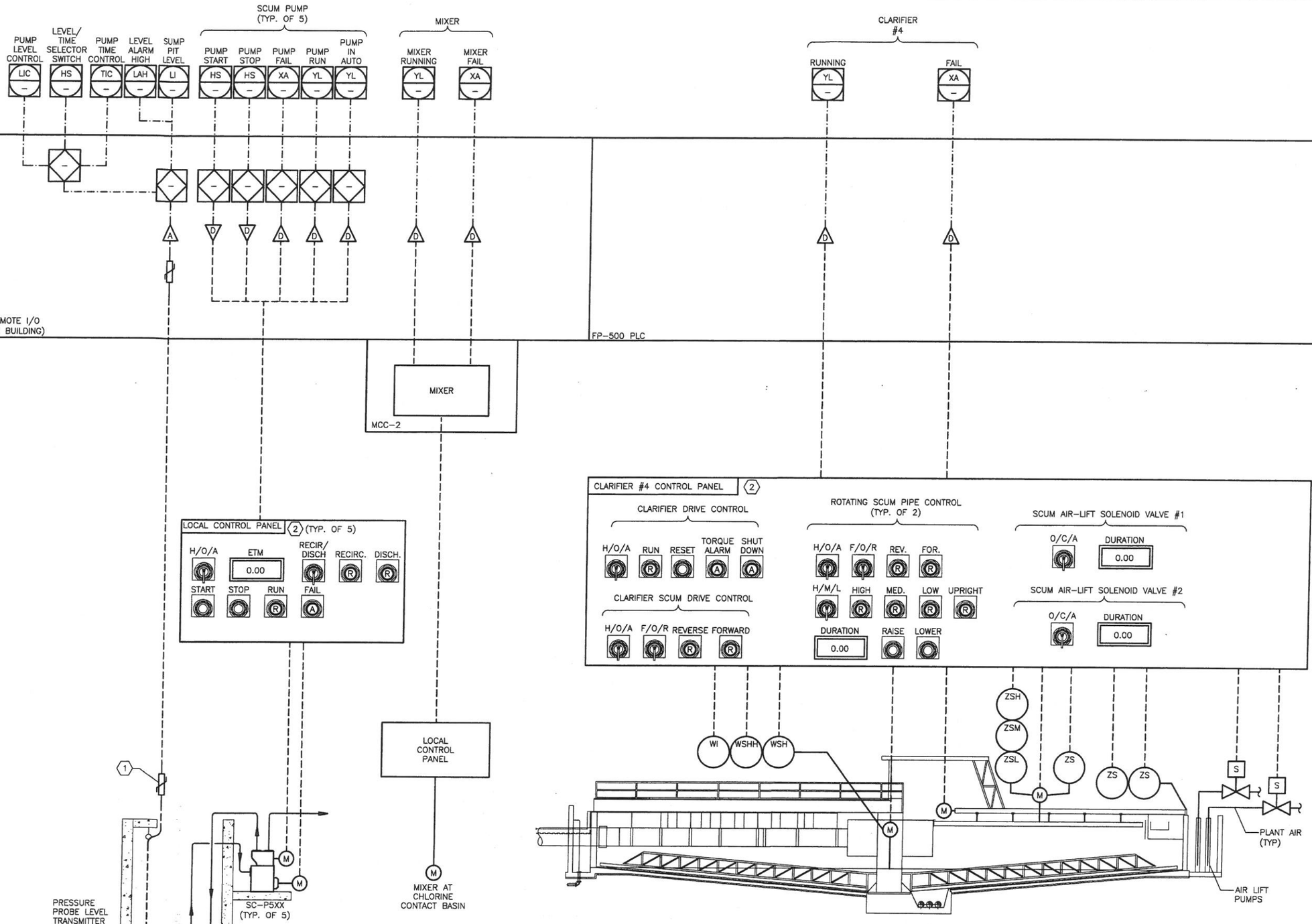

CLARIFIER	SCUM PUMP
CLARIFIER NO. 1	SC-P510
CLARIFIER NO. 2	SC-P520
CLARIFIER NO. 3	SC-P530
CLARIFIER NO. 4	SC-P540
CLARIFIER NO. 5	SC-P550

DATE	REVISION	BY

GAI
Gupta & Associates, Inc.
consulting engineering
Registration No. F-2593
13626 Gamma Road
Dallas, Texas 75244
Tel: 972-490-7661
Fax: 972-490-7125
email: r&g@gaiconsulting.com

03/15/2013
H. A. FOROUZAN
77748
REGISTERED PROFESSIONAL ENGINEER
STATE OF TEXAS

LJA Engineering Inc.
2929 Briarpark Drive
Suite 600
Houston, Texas 77042
Phone 713.953.5200
Fax 713.953.5026
FRN - F-1386

SURVEYED BY: AMANI ENG. | FB NO.: P-5679

CITY OF HOUSTON
DEPARTMENT OF PUBLIC WORKS AND ENGINEERING

ALMEDA SIMS WWTP & SPF IMPROVEMENTS PACKAGE-3

INSTRUMENTATION CLARIFIER AREA SCUM PUMP P&ID

WBS NUMBER	R-000298-0008-4
DRAWING SCALE	NTS
CITY OF HOUSTON, PM	IRAJ RANJBAR, P.E.
SHEET NO.	105 OF 117

PUBLIC WORKS & ENGINEERING
50431
CITY OF HOUSTON, TEXAS

DWG: I-06

Z:\V814_Houston Almeda Sims WWTP Improvement\Drawings\Instrumentation and Control\Working\I-06.dwg

BLOWER #1 | BLOWER #1 | SKIMMER F-SKIM-01 | MIXER 710-A | MIXER 710-B | MIXER 710-C | MIXER 710-D | MIXER 720-A | MIXER 720-B

BLOWER RUNNING (YL) | BLOWER FAIL (XA) | BLOWER RUNNING (YL) | BLOWER FAIL (XA) | SKIMMER RUNNING (YL) | SKIMMER FAIL (XA) | MIXER RUNNING (YL) | MIXER FAIL (XA) | MIXER RUNNING (YL) | MIXER FAIL (XA) | MIXER RUNNING (YL) | MIXER FAIL (XA) | MIXER RUNNING (YL) | MIXER FAIL (XA) | MIXER RUNNING (YL) | MIXER FAIL (XA) | MIXER RUNNING (YL) | MIXER FAIL (XA)

PLANT SCADA

NEW REMOTE I/O (MCC-4 BUILDING)

FIELD

SKIMMER STARTER | MIXER 710-A | MIXER 710-B | MIXER 710-C | MIXER 710-D | MIXER 720-A | MIXER 720-B

MCC-4

LOCAL CONTROL PANEL | LOCAL CONTROL PANEL | MANUFACTURER PANEL | LOCAL CONTROL PANEL (ON OFF RUN) | LOCAL CONTROL PANEL (ON OFF RUN) | LOCAL CONTROL PANEL (ON OFF RUN) | LOCAL CONTROL PANEL (ON OFF RUN) | LOCAL CONTROL PANEL (ON OFF RUN) | LOCAL CONTROL PANEL (ON OFF RUN) | LOCAL CONTROL PANEL (ON OFF RUN)

BLOWER #1 | BLOWER #2 | SKIMMER MOTOR F-SKIM-01 | MIXER 710-A | MIXER 710-B | MIXER 710-C | MIXER 710-D | MIXER 720-A | MIXER 720-B

DATE	REVISION	BY

GAI
Gupta & Associates, Inc.
consulting engineering
Registration No. F-2393
13626 Gamma Road
Dallas, Texas 75244
Tel: 972-490-7661
Fax: 972-490-7125
email: vkg@gmiconsulting.com

03/15/2013

STATE OF TEXAS
H. A. FOROUZAN
77748
REGISTERED PROFESSIONAL ENGINEER

LJA Engineering Inc.
2929 Briarpark Drive
Suite 600
Houston, Texas 77042
Phone 713.953.5200
Fax 713.953.5026
FRN - F-1386

SURVEYED BY: AMANI ENG. | FB NO.: P-5679

CITY OF HOUSTON
DEPARTMENT OF PUBLIC WORKS AND ENGINEERING

ALMEDA SIMS WWTP & SPF IMPROVEMENTS PACKAGE-3

INSTRUMENTATION AERATION NEW EQUIPMENT P&ID - I

WBS NUMBER	R-000298-0008-4
DRAWING SCALE	NTS
CITY OF HOUSTON, PM	IRAJ RANJBAR, P.E.
SHEET NO.	106 OF 117

PUBLIC WORKS & ENGINEERING
50431
CITY OF HOUSTON
HOUSTON TEXAS

DWG: I-07

Z:\H814_Houston Almeda Sims WWTP Improvement\Drawings\Instrumentation and Control\Working\I-07.dwg

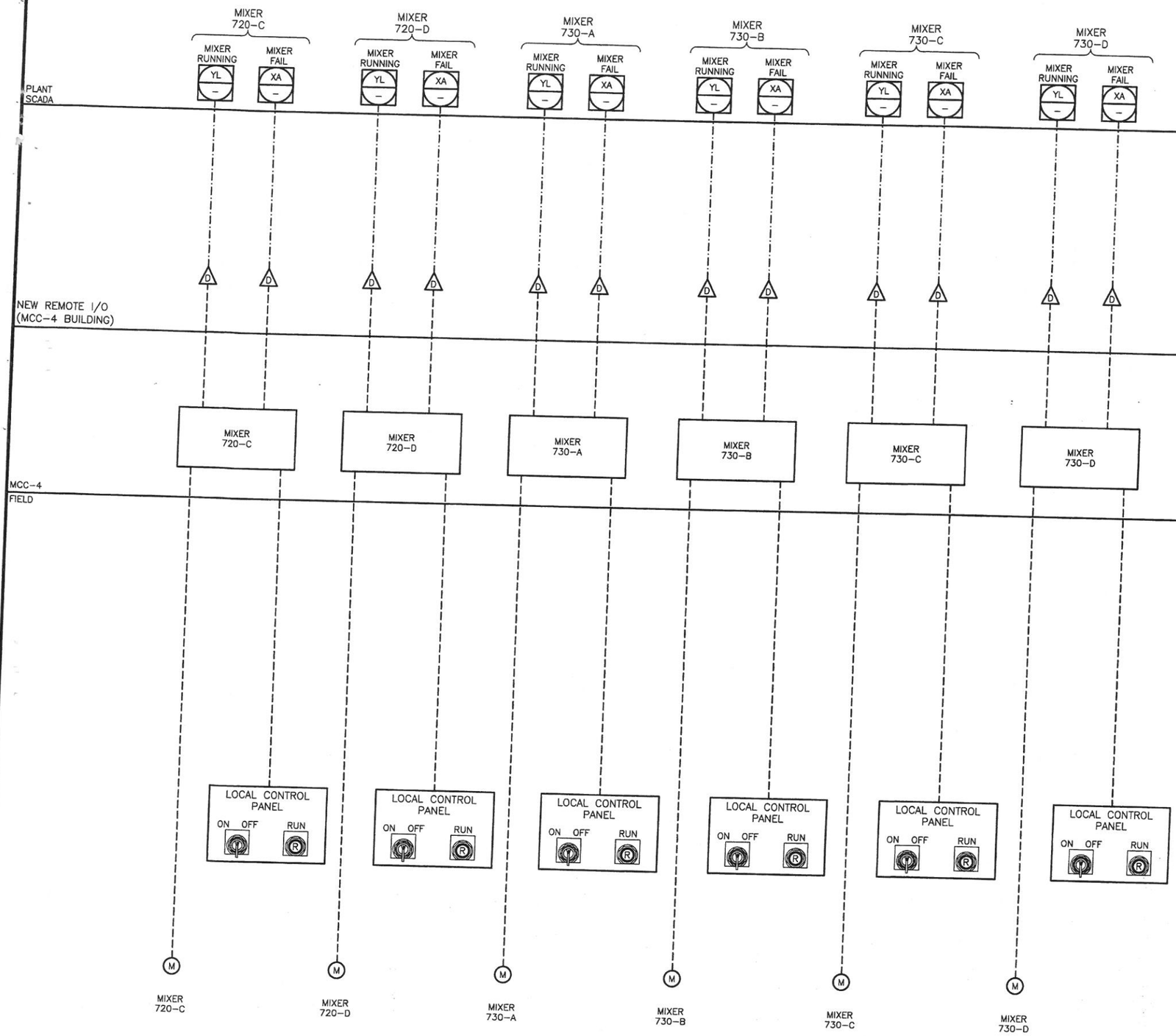

DATE	REVISION	BY

GAI
Gupta & Associates, Inc.
consulting engineering
Registration No. F-2593
13636 Gamma Road
Dallas, Texas 75244
Tel: 972-490-7661
Fax: 972-490-7125
email: r4g@gaiconsulting.com

03/15/2013

STATE OF TEXAS
H. A. FOROUZAN
77748
REGISTERED PROFESSIONAL ENGINEER

LJA Engineering Inc.
2929 Briarpark Drive
Suite 600
Houston, Texas 77042
Phone 713.953.5200
Fax 713.953.5026
FRN - F-1386

SURVEYED BY: AMANI ENG. | FB NO.: P-5679

CITY OF HOUSTON
DEPARTMENT OF PUBLIC WORKS AND ENGINEERING

ALMEDA SIMS WWTP & SPF IMPROVEMENTS PACKAGE–3

INSTRUMENTATION AERATION NEW EQUIPMENT P&ID – II

WBS NUMBER	R–000298–0008–4
DRAWING SCALE	NTS
CITY OF HOUSTON, PM	IRAJ RANJBAR, P.E.
SHEET NO.	107 OF 117

PUBLIC WORKS & ENGINEERING
50431
HOUSTON, TEXAS

DWG: I–08

Z:\H814_Houston Almeda Sims WWTP Improvement\Drawings\Instrumentation and Control\Working\I–08.dwg

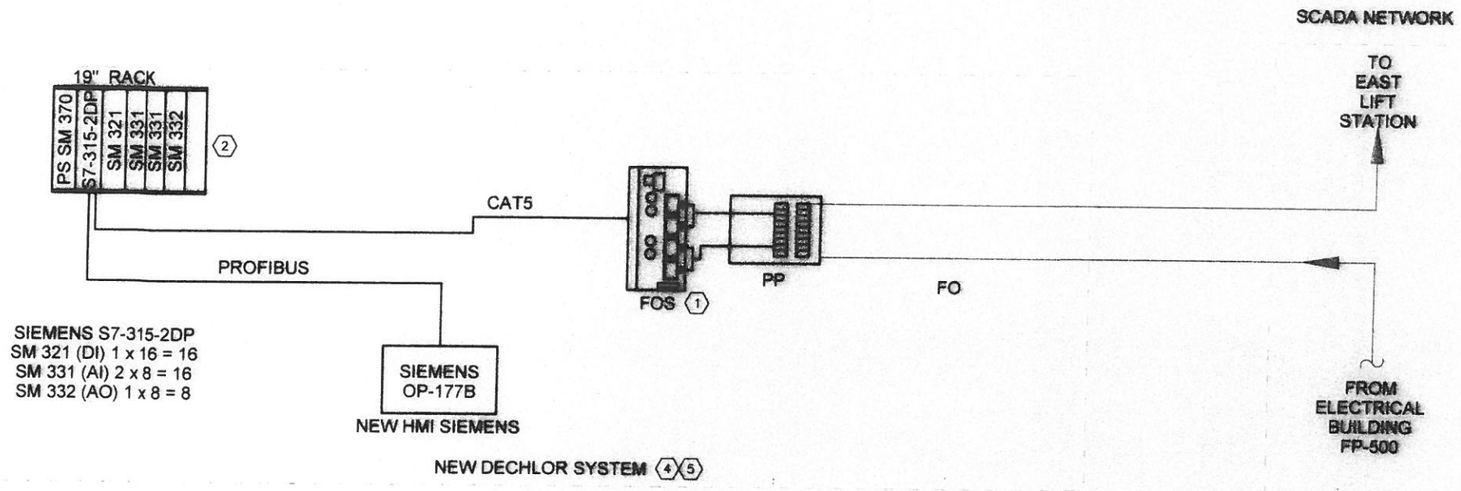

NOTES:

1. REMOVE THE EXISTING NETWORK SWITCH AND FIBER PATCH PANEL AND RE-TERMINATE EXISTING FIBER OPTIC CABLE ON THE NEW PATCH PANEL AND CONNECT THE NEW NETWORK SWITCH TO THE NEW DECHLOR PANEL.
2. REINSTALL AND RECONNECT ANALYZERS, FLOW METERS, FEED PUMPS TO NEW DECHLOR PLC INPUT/OUTPUT.
3. THE CONTRACTOR SHALL DEMOLISH THE EXISTING ENCLOSURE AND RETURN ALL THE EXISTING DEVICES TO THE OWNER.
4. INSTALL NEW ENCLOSURE AND CONNECT NEW PLC, OIU, AND NEW DEVICES. REFER TO SHEET I-3A SERIES.
5. REFER TO SHEET I-08 FOR THE NEW PLC PANEL.

LEGEND:

FOS – FIBER OPTIC SWITCH
PP – PATCH PANEL
FO – FIBER OPTIC CABLE
CAT5 – CATEGORY 5 COPPER CABLE

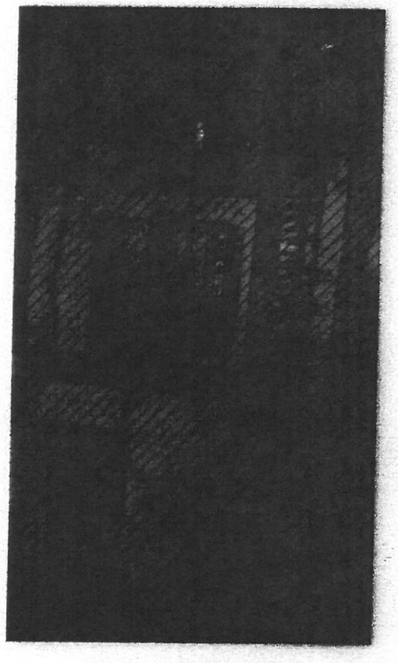

DECHLORINATION BUILDING
EXISTING PLC
PHOTO 3 5

DATE	REVISION	BY

GAI
Gupta & Associates, Inc.
consulting engineering
Registration No. F-2593
13626 Gamma Road
Dallas, Texas 75244
Tel. 972-490-7661
Fax. 972-490-7125
email: vgpt@gaiconsulting.com

STATE OF TEXAS
H. A. FOROUZAN
77748
REGISTERED PROFESSIONAL ENGINEER
03/15/2013

LJA Engineering Inc.
2929 Briarpark Drive
Suite 600
Houston, Texas 77042
Phone 713.953.5200
Fax 713.953.5026
FRN - F-1386

SURVEYED BY: AMANI ENG. | FB NO.: P-5679

CITY OF HOUSTON
DEPARTMENT OF PUBLIC WORKS AND ENGINEERING

ALMEDA SIMS WWTP & SPF IMPROVEMENTS PACKAGE-3

DECHLORINATION BUILDING NEW PLC LAYOUT

WBS NUMBER	R-000298-0008-4
DRAWING SCALE	NTS
CITY OF HOUSTON, PM	
IRAJ RANJBAR, P.E.	
SHEET NO. 108 OF 117	

PUBLIC WORKS CONSTRUCTION 50431 HOUSTON, TEXAS

DWG: I-09

Z:\4814_Houston Almeda Sims WWTP Improvement\Drawings\Instrumentation and Control\Working\I-09.dwg

105

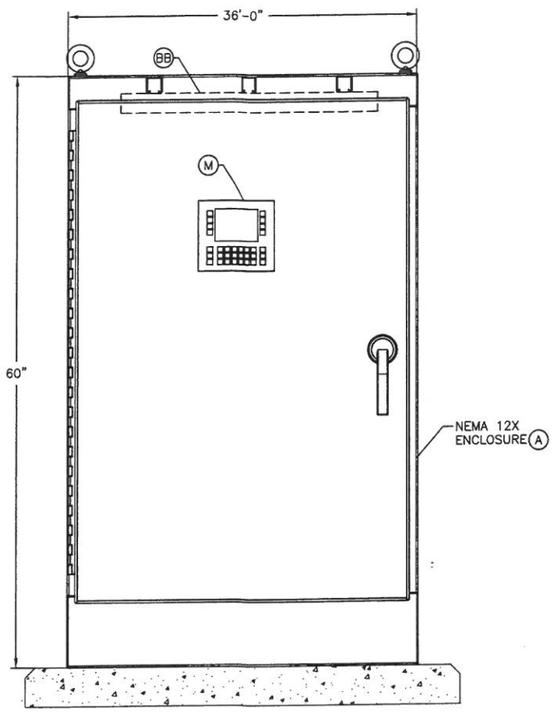

FRONT VIEW

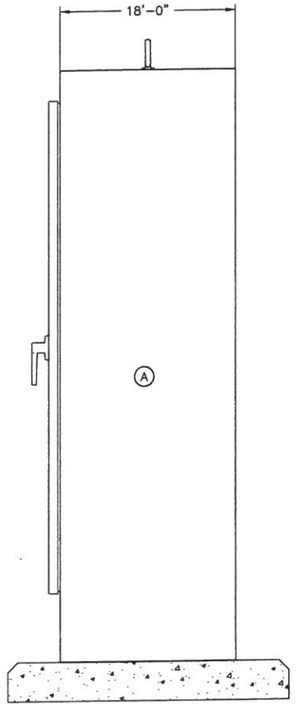

SIDE VIEW

NEW PLC CABINET

DETAIL A
NTS

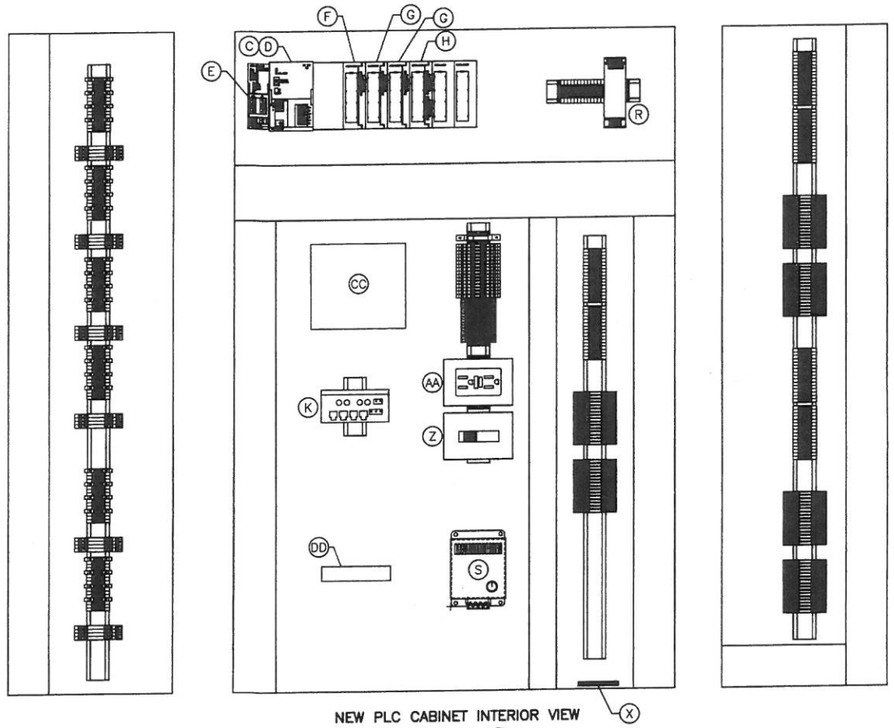

NEW PLC CABINET INTERIOR VIEW

DETAIL B
NTS

EQUIPMENT & DEVICE SCHEDULE		
ITEM	QUANTITY	DESCRIPTION
A	1	60"x36"x18" DUAL ACCESS, FREE STANDING, 14 GAUGE STEEL NEMA TYPE 12 ENCLOSURE, WITH 12 GAUGE STEEL BACK PANEL HOFFMAN – A603618FSD, W/ A60P36F1.
B	1	19" MOUNTING RAIL – SIEMENS 6ES7390–1AE80–0AA0
C	1	S7–315–2PN/DP CPU, 120VAC POWERED WITH 128KB INTEGRAL WORK MEMORY–SIEMENS 6ES7–315–2EH13–0AB0
D	1	MICRO MEMORY CARD, 2MB–SIEMENS 6ES7–953–BLL11–0AA0
E	1	S7 POWER SUPPLY W/ 120VAC INPUT & 24VDC OUTPUT RATED AT 5A–SIEMENS 6ES7–307–1EA00–0AA0
F	1	24VDC 16 CHANNEL DIGITAL INPUT MODULE–SIEMENS 6ES7–331–7KF02–3211BH02–0AA0
G	2	8–POINT ANALOG INPUT MODULE–SIEMENS 6ES7–331–7KF02–0AB0
H	1	8–POINT ANALOG OUTPUT MODULE–SIEMENS 6ES7–321–7KF02–0AB0
I	2	20–PIN. SCREW–TYPE TERMINALS–SIEMENS 6ES7–392–1AJ00–0AA0
J	1	40–PIN. SCREW–TYPE CONTACTS–SIEMENS 6ES7–392–1AM00–0AA0
K	1	ETHERNET SWITCH, SCALANCE X204–2 IND. 4RJ48, 2FO–SIEMENS 6GK5204–2BB10–2AA3
L	1	ETHERNET PATCH CABLE–SIEMENS CBL–CAT5–007 (IN STOCK)
M	1	SIMATIC OP 177B COLOR OPERATOR PANEL–SIEMENS 6AV6–642–0DA01–1AX0
N	1	OP177B TO S7–300 COMMUNICATION CABLE–SIEMENS 6ES7–901–08F00–0AA0
O	1	SIEMENS HYDRORANGER 200 FOR TWO CHLORINE TANKS
P	1	SIEMENS HYDRORANGER 200 FOR TWO SODIUM BISULFATE TANKS
R	1	120VAC–24VDC LOOP POWER SUPPLY RATED @ 5 AMPS W/ ASSEMBLY ADAPTER FOR S7–300 DIN RAIL PHOENIX CONTACT QUINT–PS100–24AC/24DC/5 (2938581)
S	1	120VAC SURGE PROTECTOR WITH DRY RELAY CONTACTS–SURGE SUPPRESSION INC. SDLA1P1C
T	1	1000VA/700W UNINTERRUPTIBLE POWER SUPPLY WITH ALARM CONTACT POWERWARE PW9120–1000 WITH PW1014018–RELAY AND BPE01MBB1A BYPASS SWITCH (FIELD MOUNTED)
U	LOT	TERMINAL BLOCK–WEIDMULLER WDU 2.5 (102000)
V	LOT	FUSED TERMINAL BLOCK–WEIDMULLER WSI 6 (101100)
W	LOT	WIRE DUCT 1.5" WIDE X 2" DEEP – SL1.5X2W4 HELLERMANN TYTON
X	1	GROUND BAR – SQUARE D 1630 PK9GTA
Y	1	FUSES FOR FUSED TERMINAL BLOCKS – BUSSMANN (24) 63MA, (2) 5A, (16) 250MA
Z	1	SWITCH FOR CABINET LIGHT, 120V, 20A, SPST – HUBBELL HBL12211
AA	1	DUPLEX RECEPTACLE, 120V, 20A, 2 WIRE, GROUNDED GFCI TYPE – HUBBELL GF5362IA
BB	1	30 WATT FLUORESCENT STRIP LIGHT W/ ZERO DEGREE BALLAST – USI COLUMBIA CS3–130–Z120
CC	1	240VAC 300 WATT STRIP SPACE HEATER (120VAC POWERED) – VULCAN 4E261
DD	1	STRIP SPACE HEATER THERMOSTAT – COLUMBUS ELECTRIC 2E158

LEGEND:

FOS – FIBER OPTIC SWITCH
PP – PATCH PANEL
FO – FIBER OPTIC CABLE
CAT5 – CATEGORY 5 COPPER CABLE

DATE	REVISION	BY

GAI
Gupta & Associates, Inc.
consulting engineering
Registration No. F-2593
13636 Gamma Road
Dallas, Texas 75244
Tel: 972-490-7661
Fax: 972-490-7125
email: rk@gaiconsulting.com

03/15/2013

STATE OF TEXAS
H. A. FOROUZAN
77748
REGISTERED PROFESSIONAL ENGINEER

LJA Engineering Inc.
2929 Briarpark Drive
Suite 600
Houston, Texas 77042
Phone 713.953.5200
Fax 713.953.5026
FRN - F-1386

SURVEYED BY: AMANI ENG. | FB NO.: P–5679

CITY OF HOUSTON
DEPARTMENT OF PUBLIC WORKS AND ENGINEERING

ALMEDA SIMS WWTP & SPF IMPROVEMENTS PACKAGE–3

DECHLORINATION BUILDING
NEW PLC DETAILS

WBS NUMBER	R–000298–0008–4
DRAWING SCALE	NTS
CITY OF HOUSTON, PM	IRAJ RANJBAR, P.E.
SHEET NO.	109 OF 117

PUBLIC WORKS & ENGINEERING
50431
CITY OF HOUSTON, TEXAS

DWG: I–10

Z:\H814_Houston Almeda Sims WWTP Improvement\Drawings\Instrumentation and Control\Working\I–10.dwg

110

FIELD	MOTOR CONTROL CENTER	CONTROL PANEL	
		DOOR	INTERIOR PANEL

PLC

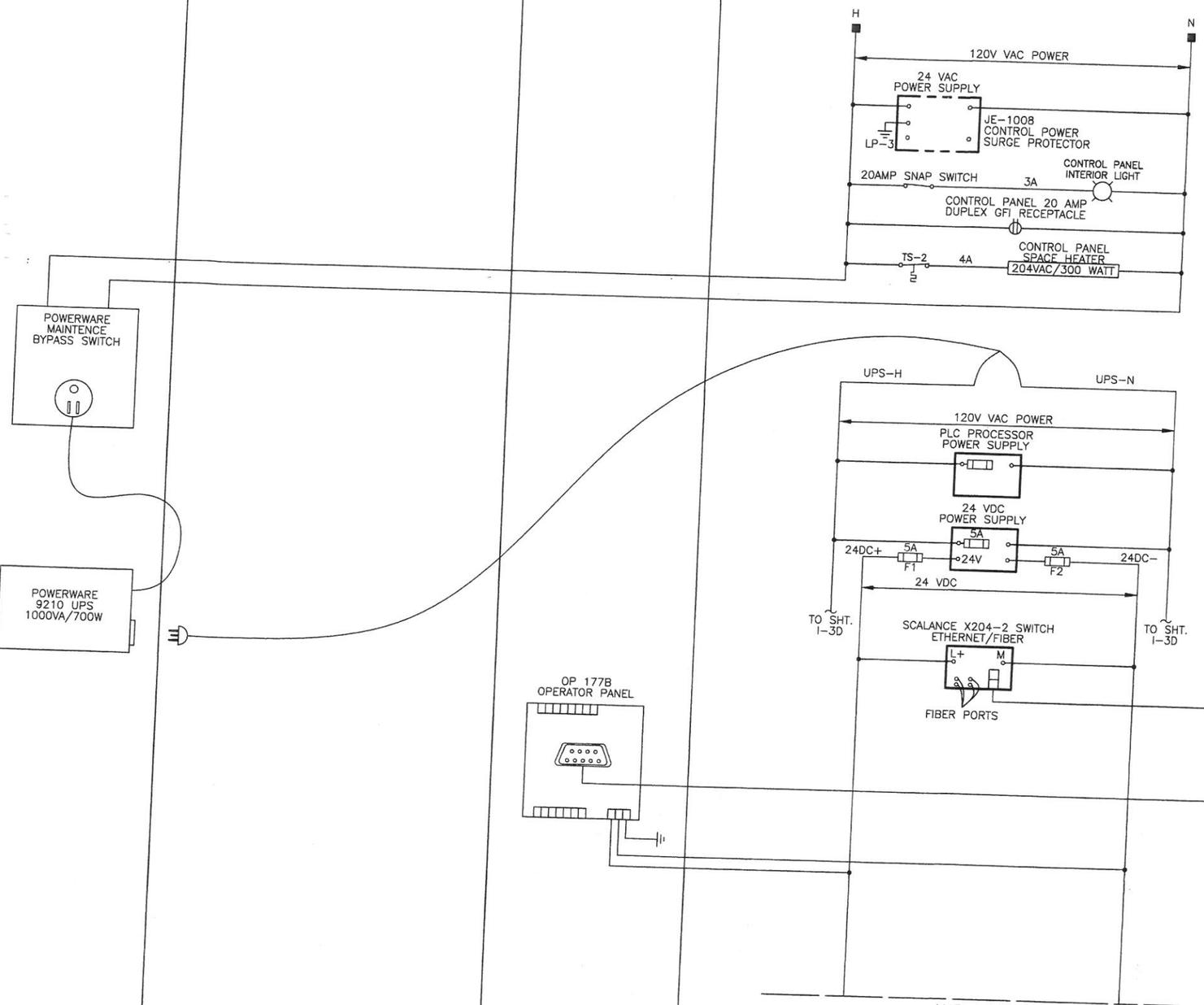

NOTES:

1. –
2.

LEGEND

- △ DEVICE OR FIELD TERMINAL LOCATED AT MOTOR
- • DEVICE OR FIELD TERMINAL LOCATED REMOTE
- □ DEVICE OR FIELD TERMINAL LOCATED AT MCC/POWER P
- ■ FIELD TERMINAL LOCATED AT CONTROL PANEL
- ▲ REMOTE TERMINAL
- ● DEVICE TERMINAL NO.
- ◆ PLC INTERFACE TERMINAL

DATE	REVISION	BY

GAI
Gupta & Associates, Inc.
consulting engineering
Registration No. F-2593
13626 Gamma Road
Dallas, Texas 75244
Tel: 972-490-7661
Fax: 972-490-7135
email: vkg@gaiconsulting.com

03/15/2013

STATE OF TEXAS
H. A. FOROUZAN
77748
REGISTERED
PROFESSIONAL ENGINEER

LJA Engineering Inc.
2929 Briarpark Drive
Suite 600
Houston, Texas 77042
Phone 713.953.5200
Fax 713.953.5026
FRN - F-1386

SURVEYED BY: AMANI ENG. | FB NO.: P-5679

CITY OF HOUSTON

DEPARTMENT OF PUBLIC WORKS AND ENGINEERING

ALMEDA SIMS WWTP & SPF IMPROVEMENTS PACKAGE-3

DECHLORINATION BUILDING NEW PLC WIRING DIAGRAM – 1

WBS NUMBER	R-000298-0008-4
DRAWING SCALE	NTS
CITY OF HOUSTON, PM	IRAJ RANJBAR, P.E.
SHEET NO.	110 OF 117

DWG: I-11

50421
REGISTERED
PROFESSIONAL ENGINEER
HOUSTON, TEXAS

Z:\1814_Houston Almeda Sims WWTP Improvement\Drawings\Instrumentation and Control\Working\I-11.dwg

FIELD	MOTOR CONTROL CENTER	CONTROL PANEL	
		DOOR	INTERIOR PANEL

MATCHLINE 1

24 VDC

20 CARD 1 COMMON

F4 250MA F4 2 DI 1-1 (1 0.0) (FUTURE)

F5 250MA F5 3 DI 1-2 (1 0.1) (FUTURE)

F6 250MA F6 4 DI 1-3 (1 0.2) (FUTURE)

F7 250MA F7 5 DI 1-4 (1 0.3) (FUTURE)

F8 250MA F8 6 DI 1-5 (1 0.4) (FUTURE)

F9 250MA F9 7 DI 1-6 (1 0.5) (FUTURE)

F10 250MA F10 8 DI 1-7 (1 0.6) (FUTURE)

F11 250MA F11 9 DI 1-8 (1 0.7) (FUTURE)

F12 250MA F12 12 DI 1-9 (1 1.0) (FUTURE)

F13 250MA F13 13 DI 1-10 (1 1.1) (FUTURE)

F14 250MA F14 14 DI 1-11 (1 1.2) (FUTURE)

F15 250MA F15 15 DI 1-12 (1 1.3) (FUTURE)

MATCHLINE 2

PLC

NOTES:

1 -

2

LEGEND

- △ DEVICE OR FIELD TERMINAL LOCATED AT MOTOR
- * DEVICE OR FIELD TERMINAL LOCATED REMOTE
- □ DEVICE OR FIELD TERMINAL LOCATED AT MCC/POWER PANE
- ■ FIELD TERMINAL LOCATED AT CONTROL PANEL
- ▲ REMOTE TERMINAL
- ● DEVICE TERMINAL NO.
- ◆ PLC INTERFACE TERMINAL

DATE	REVISION	BY

GAI
Gupta & Associates, Inc.
consulting engineering
Registration No. F-2593
13626 Gamma Road
Dallas, Texas 75244
Tel: 972-490-7661
Fax: 972-490-7125
email: vkg@gaiconsulting.com

STATE OF TEXAS
H. A. FOROUZAN
77748
REGISTERED PROFESSIONAL ENGINEER
03/15/2013

LJA Engineering Inc.
2929 Briarpark Drive
Suite 600
Houston, Texas 77042
Phone 713.953.5200
Fax 713.953.5026
FRN - F-1386

SURVEYED BY: AMANI ENG. | FB NO.: P-5679

CITY OF HOUSTON
DEPARTMENT OF PUBLIC WORKS AND ENGINEERING

ALMEDA SIMS WWTP & SPF IMPROVEMENTS PACKAGE-3

DECHLORINATION BUILDING NEW PLC WIRING DIAGRAM - II

WBS NUMBER	R-000298-0008-4
DRAWING SCALE	NTS
CITY OF HOUSTON, PM	IRAJ RANJBAR, P.E.
SHEET NO.	111 OF 117

DWG: I-12

PUBLIC WORKS & ENGINEERING
50431
CITY OF HOUSTON
HOUSTON, TEXAS

Z:\W814_Houston Almeda Sims WWTP Improvement\Drawings\Instrumentation and Control\Working\I-12.dwg

111

FIELD	MOTOR CONTROL CENTER	CONTROL PANEL	
		DOOR	INTERIOR PANEL

MATCHLINE 2

FROM SHT. I-3B

120 VAC POWER
24 VDC

FROM SHT. I-3B

UPS-H UPS UPS-N

24DC+

UPS ALARM

24DC-

PLC TIME RESET

PLC

F16 250MA F16 13 DI 1-13(1 1.5) UPS ALARM

F17 250MA F17 14 DI 1-14(1 1.6) PLC TIME RESET

F18 250MA F18 15 DI 1-15(1 1.7) SPARE

F19 250MA F19 15 DI 1-16(1 1.8) SPARE

1 CARD 2 24VDC

F20 63MA F20 3 AI 2-1

(FUTURE)

F21 63MA F21 5 AI 2-2

(FUTURE)

MATCHLINE 3

NOTES:

(1) -

(2)

LEGEND

△ DEVICE OR FIELD TERMINAL LOCATED AT MOTOR
* DEVICE OR FIELD TERMINAL LOCATED REMOTE
□ DEVICE OR FIELD TERMINAL LOCATED AT MCC/POWER PANI
■ FIELD TERMINAL LOCATED AT CONTROL PANEL
▲ REMOTE TERMINAL
● DEVICE TERMINAL NO.
◆ PLC INTERFACE TERMINAL

DATE	REVISION	BY

GAI
Gupta & Associates, Inc.
consulting engineering
Registration No. F-2593
13626 Gamma Road
Dallas, Texas 75244
Tel: 972-490-7661
Fax: 972-490-7125
email: vkg@gaiconsulting.com

STATE OF TEXAS
H. A. FOROUZAN
77748
REGISTERED PROFESSIONAL ENGINEER
03/15/2013

LJA Engineering Inc.
2929 Briarpark Drive
Suite 600
Houston, Texas 77042
Phone 713.953.5200
Fax 713.953.5026
FRN - F-1386

SURVEYED BY: AMANI ENG. | FB NO.: P-5679

CITY OF HOUSTON
DEPARTMENT OF PUBLIC WORKS AND ENGINEERING

ALMEDA SIMS WWTP & SPF IMPROVEMENTS PACKAGE-3

DECHLORINATION BUILDING NEW PLC WIRING DIAGRAM - III

WBS NUMBER	R-000298-0008-4
DRAWING SCALE	NTS
CITY OF HOUSTON, PM	IRAJ RANJBAR, P.E.
SHEET NO.	112 OF 117

50431
REGISTERED ENGINEER
HOUSTON, TEXAS

DWG: I-13

H:\814_Houston Almeda Sims WWTP Improvement\Drawings\Instrumentation and Control\Working\I-13.dwg

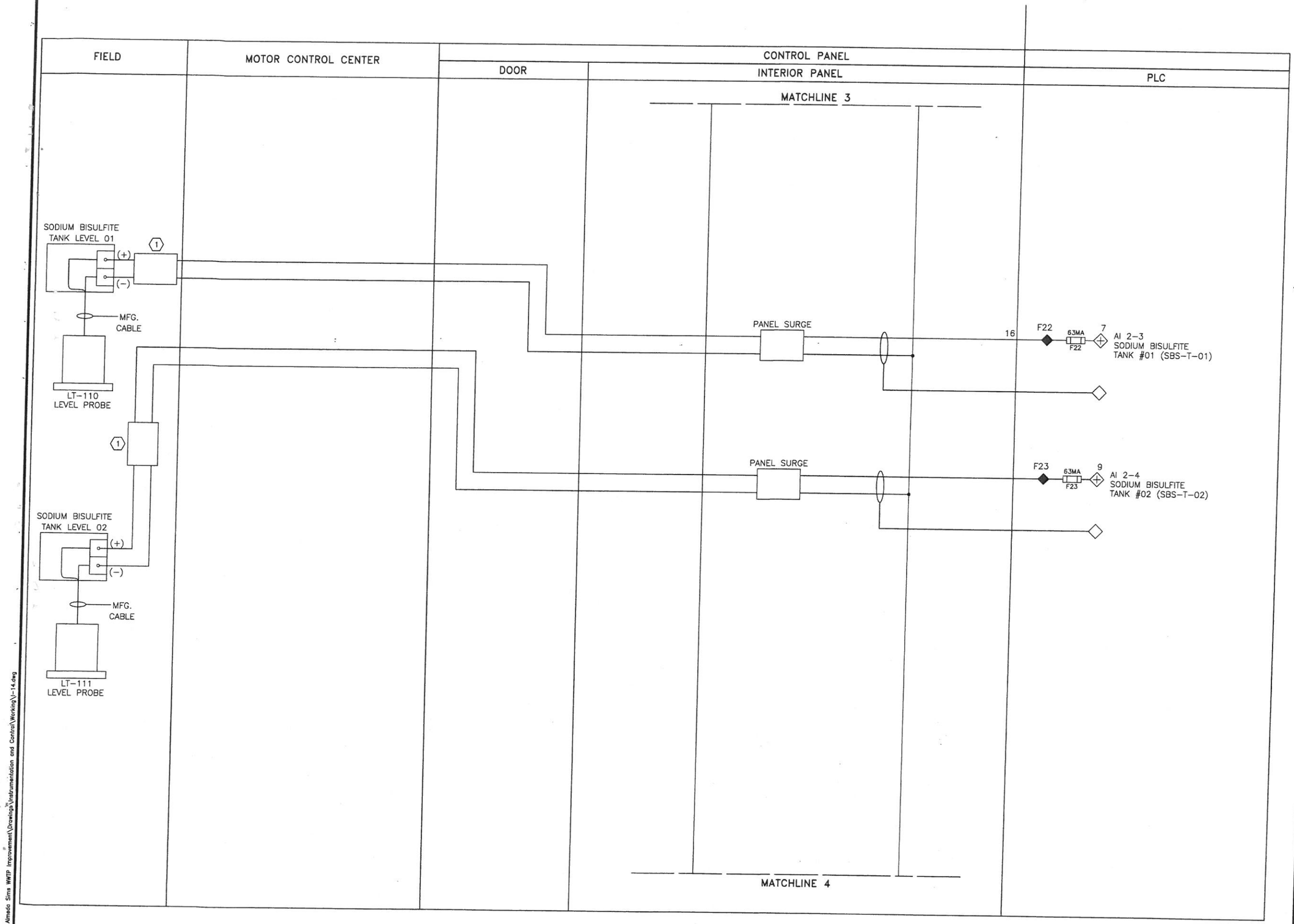

NOTES:

(1) FOR ALL THE TANK LEVEL 4−20mA SIGNAL, A SURGE SUPPRESSOR SHALL BE INSTALLED AT THE FIELD SIDE.

LEGEND

- △ DEVICE OR FIELD TERMINAL LOCATED AT MOTOR
- • DEVICE OR FIELD TERMINAL LOCATED REMOTE
- □ DEVICE OR FIELD TERMINAL LOCATED AT MCC/POWER PAN
- ■ FIELD TERMINAL LOCATED AT CONTROL PANEL
- ▲ REMOTE TERMINAL
- ● DEVICE TERMINAL NO.
- ◆ PLC INTERFACE TERMINAL

DATE	REVISION	BY

GAI
Gupta & Associates, Inc.
consulting engineering
Registration No. F-2593
13626 Gamma Road
Dallas, Texas 75244
Tel: 972-490-7661
Fax: 972-490-7125
email: vkg@gaiconsulting.com

03/15/2013

STATE OF TEXAS
H. A. FOROUZAN
77748
REGISTERED PROFESSIONAL ENGINEER

LJA Engineering Inc.
2929 Briarpark Drive
Suite 600
Houston, Texas 77042
Phone 713.953.5200
Fax 713.953.5026
FRN - F-1386

SURVEYED BY: AMANI ENG. | FB NO.: P−5679

CITY OF HOUSTON
DEPARTMENT OF PUBLIC WORKS AND ENGINEERING

ALMEDA SIMS WWTP & SPF IMPROVEMENTS PACKAGE−3

DECHLORINATION BUILDING NEW PLC WIRING DIAGRAM − IV

WBS NUMBER	R−000298−0008−4
DRAWING SCALE	NTS
CITY OF HOUSTON, PM	IRAJ RANJBAR, P.E.
SHEET NO.	113 OF 117

PUBLIC WORKS & ENGINEERING
50431
CITY ENGINEER
HOUSTON, TEXAS

DWG: I−14

Z:\V814_Houston Almeda Sims WWTP Improvement\Drawings\Instrumentation and Control\Working\I−14.dwg

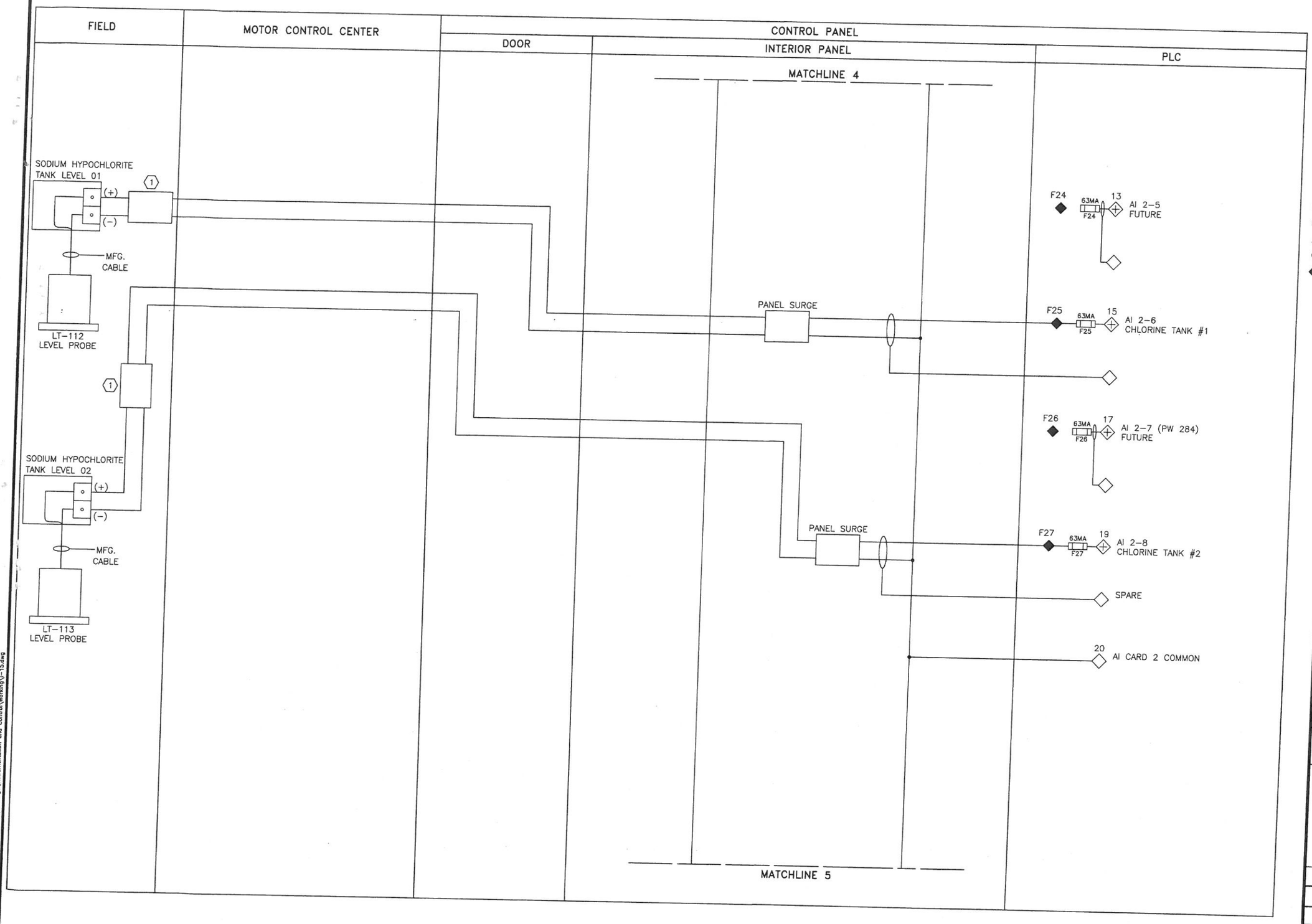

NOTES:

(1) FOR ALL THE TANK LEVEL 4–20mA SIGNAL, A SURGE SUPPRESSOR SHALL BE INSTALLED AT THE FIELD SIDE.

LEGEND

- △ DEVICE OR FIELD TERMINAL LOCATED AT MOTOR
- * DEVICE OR FIELD TERMINAL LOCATED REMOTE
- □ DEVICE OR FIELD TERMINAL LOCATED AT MCC/POWER PA
- ■ FIELD TERMINAL LOCATED AT CONTROL PANEL
- ▲ REMOTE TERMINAL
- ● DEVICE TERMINAL NO.
- ◆ PLC INTERFACE TERMINAL

DATE	REVISION	BY

GAI
Gupta & Associates, Inc.
consulting engineering
Registration No. F-2593
13626 Gamma Road
Dallas, Texas 75244
Tel: 972-490-7661
Fax: 972-490-7125
email: r&g@gaiconsulting.com

H. A. FORCUZAN
77748
REGISTERED PROFESSIONAL ENGINEER
STATE OF TEXAS
03/15/2013

LJA Engineering Inc.
2929 Briarpark Drive
Suite 600
Houston, Texas 77042
Phone 713.953.5200
Fax 713.953.5026
FRN - F-1386

SURVEYED BY: AMANI ENG. | FB NO.: P-5679

CITY OF HOUSTON

DEPARTMENT OF PUBLIC WORKS AND ENGINEERING

ALMEDA SIMS WWTP & SPF IMPROVEMENTS PACKAGE-3

DECHLORINATION BUILDING NEW PLC WIRING DIAGRAM – V

WBS NUMBER	R-000298-0008-4
DRAWING SCALE	NTS
CITY OF HOUSTON, PM	IRAJ RANJBAR, P.E.
SHEET NO.	114 OF 117

PUBLIC WORKS AND ENGINEERING 50431 HOUSTON TEXAS

DWG: I-15

Z:\H814_Houston Almeda Sims WWTP Improvement\Drawings\Instrumentation and Control\Working\I-15.dwg

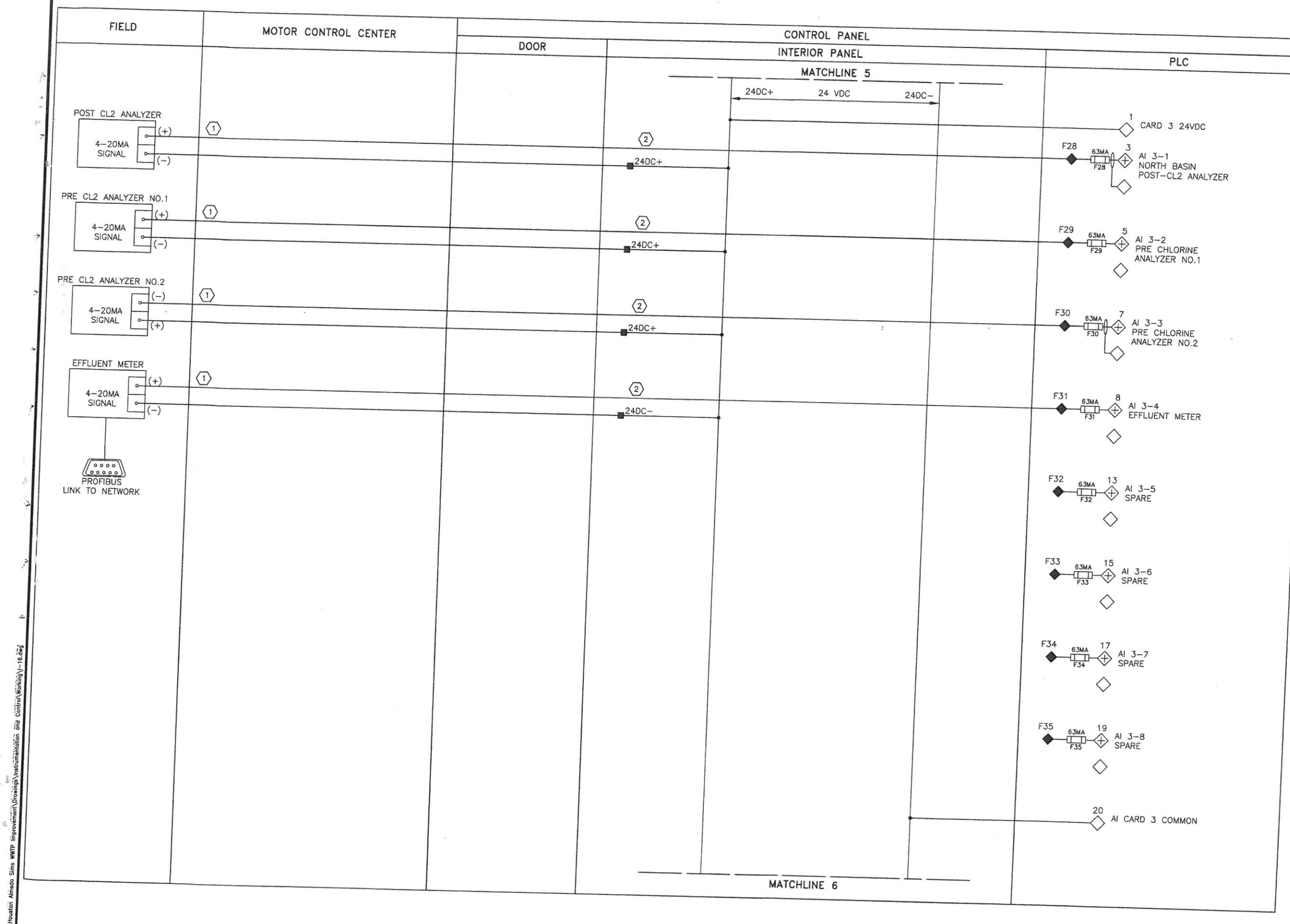

NOTES:

1. INSTALL ANALOG SURGE SUPPRESSER FOR ALL THE DEVICE INSTALLED IN THE FIELD SIDE.
2. PROTECT ALL THE 4−20mA ANALOG WITH A SURGE SUPPRESSER INSTALLED INSIDE THE PLC PANEL.

LEGEND

- △ DEVICE OR FIELD TERMINAL LOCATED AT MOTOR
- * DEVICE OR FIELD TERMINAL LOCATED REMOTE
- □ DEVICE OR FIELD TERMINAL LOCATED AT MCC/POWER PA
- ■ FIELD TERMINAL LOCATED AT CONTROL PANEL
- ▲ REMOTE TERMINAL
- ● DEVICE TERMINAL NO.
- ◆ PLC INTERFACE TERMINAL

DATE	REVISION	BY

GAI
Gupta & Associates, Inc.
consulting engineering
Registration No. F-2593
13636 Gamma Road
Dallas, Texas 75244
Tel: 972-490-7661
Fax: 972-490-7125
email: vkg@gaiconsulting.com

STATE OF TEXAS
H. A. FOROUZAN
77748
REGISTERED PROFESSIONAL ENGINEER
03/15/2013

LJA Engineering Inc.
2929 Briarpark Drive
Suite 600
Houston, Texas 77042
Phone 713.953.5200
Fax 713.953.5026
FRN - F-1386

SURVEYED BY: AMANI ENG. | FB NO.: P−5679

CITY OF HOUSTON
DEPARTMENT OF PUBLIC WORKS AND ENGINEERING

ALMEDA SIMS WWTP & SPF IMPROVEMENTS PACKAGE−3

DECHLORINATION BUILDING NEW PLC WIRING DIAGRAM − VI

WBS NUMBER	R−000298−0008−4
DRAWING SCALE	NTS
CITY OF HOUSTON, PM	IRAJ RANJBAR, P.E.
SHEET NO.	115 OF 117

PUBLIC WORKS AND ENGINEERING
50431
HOUSTON, TEXAS

DWG: I−16

Z:\H814_Houston Almeda Sims WWTP Improvement\Drawings\Instrumentation and Control\Working\I−16.dwg

ORIGINAL SCALE IN INCHES

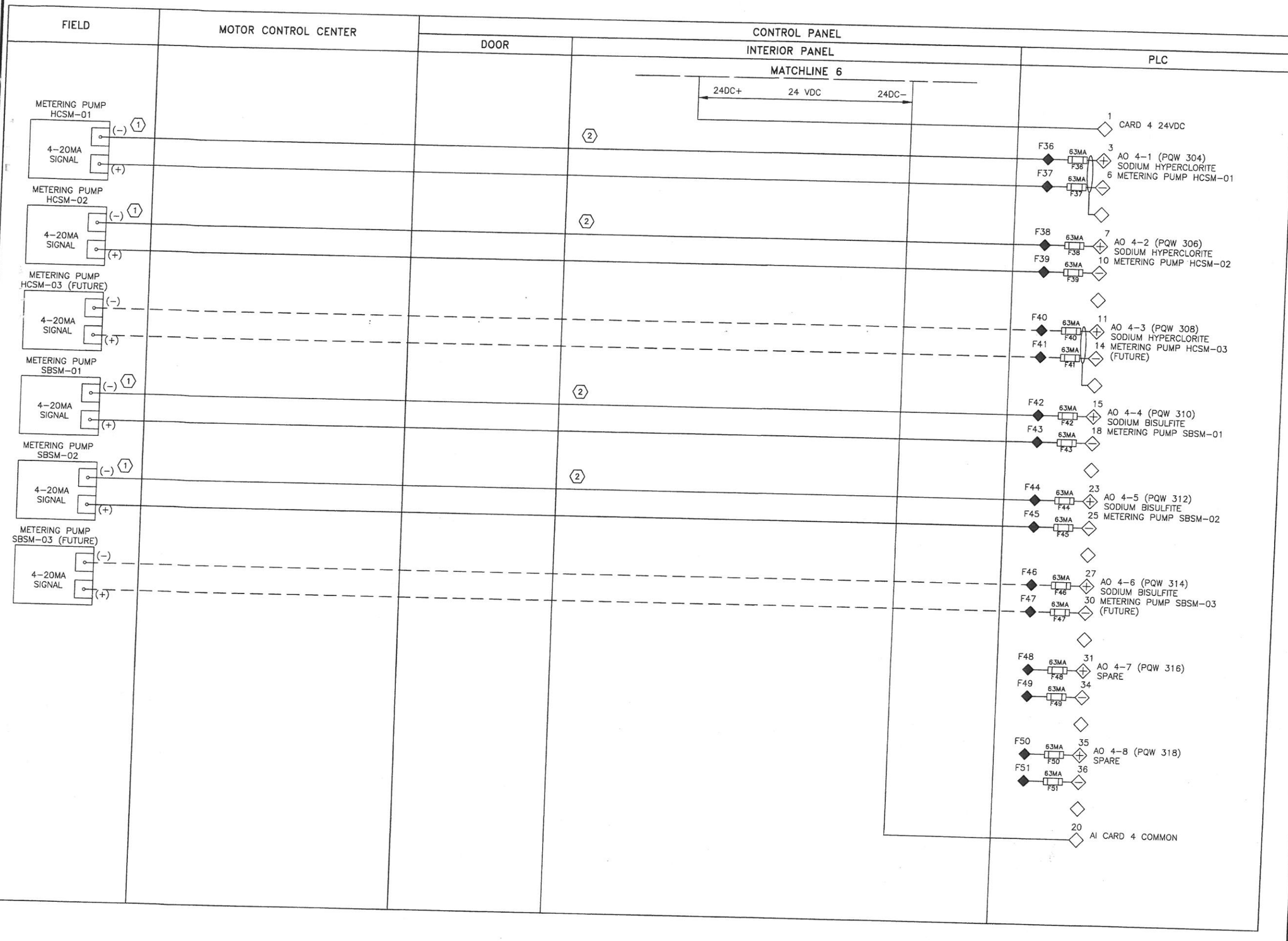

NOTES:

1. INSTALL ANALOG SURGE SUPPRESSER FOR ALL THE DEVICE INSTALLED IN THE FIELD SIDE.
2. PROTECT ALL THE 4−20mA ANALOG WITH A SURGE SUPPRESSER INSTALLED INSIDE THE PLC PANEL.

LEGEND

- △ DEVICE OR FIELD TERMINAL LOCATED AT MOTOR
- * DEVICE OR FIELD TERMINAL LOCATED REMOTE
- □ DEVICE OR FIELD TERMINAL LOCATED AT MCC/POWER PAN
- ■ FIELD TERMINAL LOCATED AT CONTROL PANEL
- ▲ REMOTE TERMINAL
- ● DEVICE TERMINAL NO.
- ◆ PLC INTERFACE TERMINAL

DATE	REVISION	BY

GAI
Gupta & Associates, Inc.
consulting engineering
Registration No. F-2593
13626 Gamma Road
Dallas, Texas 75244
Tel: 972-490-7661
Fax: 972-490-7125
email: rkg@gaiconsulting.com

03/15/2013

STATE OF TEXAS
H. A. FOROUZAN
77748
REGISTERED PROFESSIONAL ENGINEER

LJA Engineering Inc.
2929 Briarpark Drive
Suite 600
Houston, Texas 77042
Phone 713.953.5200
Fax 713.953.5026
FRN - F-1386

SURVEYED BY: AMANI ENG. | FB NO.: P−5679

CITY OF HOUSTON

DEPARTMENT OF PUBLIC WORKS AND ENGINEERING

ALMEDA SIMS WWTP & SPF IMPROVEMENTS PACKAGE−3

DECHLORINATION BUILDING NEW PLC WIRING DIAGRAM − VII

WBS NUMBER	R−000298−0008−4
DRAWING SCALE	NTS
CITY OF HOUSTON, PM	IRAJ RANJBAR, P.E.
SHEET NO.	116 OF 117

DWG: I−17

PUBLIC WORKS & ENGINEERING
50481
HOUSTON, TEXAS

Z:\V814_Houston, Almeda Sims WWTP-Improvement\Drawings\Instrumentation and Control\Working\I−17.dwg

ORIGINAL SCALE IN INCHES

NOTES:

1. ALL DETAILS AND SCHEMATICS ARE SUGGESTED INSTALLATIONS. CONTRACTOR SHALL ADHERE TO NEC CODES AND MANUFACTURER RECOMMENDATION DURING INSTALLATION.
2. FOR THE EXISTING BISULFATE TANK THE CONTRACTOR SHALL ALL THE NECESSARY HARDWIRE TO ACCOMMODATE THE NEW LEVEL PROBE INSTALLATION.

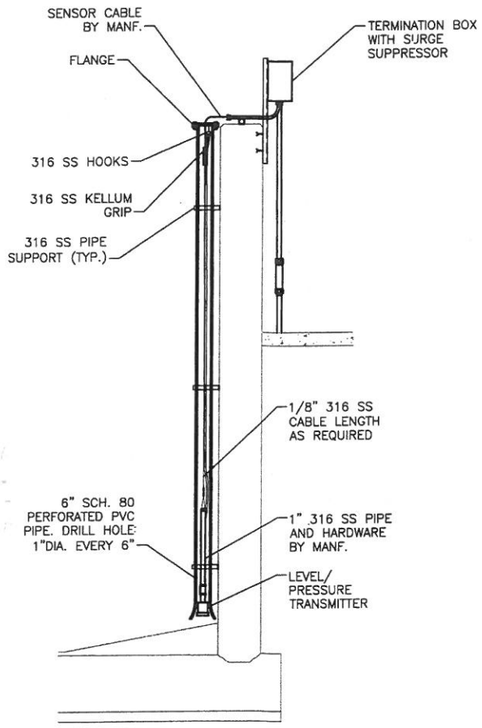

SCUM PIT
SUBMERSIBLE LEVEL TRANSMITTER

DETAIL A (–) NTS (TYP. OF 5)

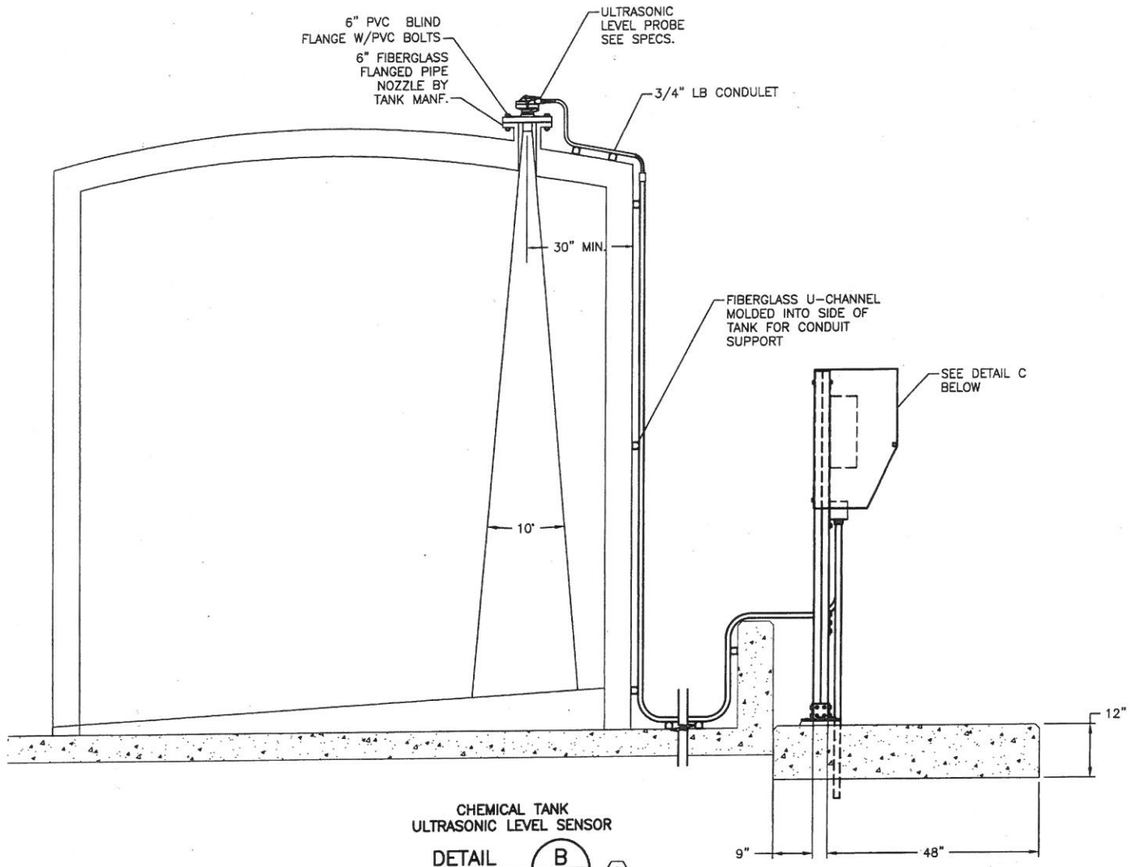

CHEMICAL TANK
ULTRASONIC LEVEL SENSOR

DETAIL B (–) NTS (TYP. OF 4) (2)

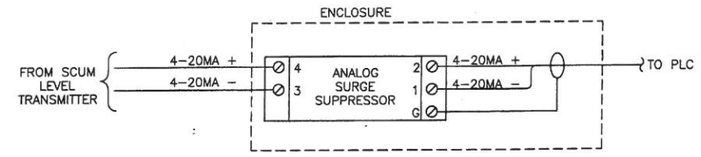

SURGE SUPPRESSOR ENCLOSURE
WITHOUT DISPLAY

SCHEMATIC (2) (–) (TYP. OF 5)

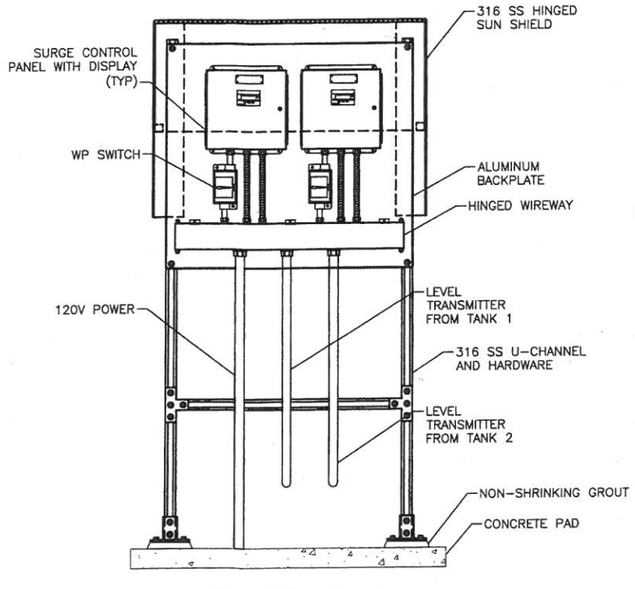

TANK LEVEL INDICATORS
INSTALLATION

DETAIL C (–) NTS (TYP. OF 2) (2)

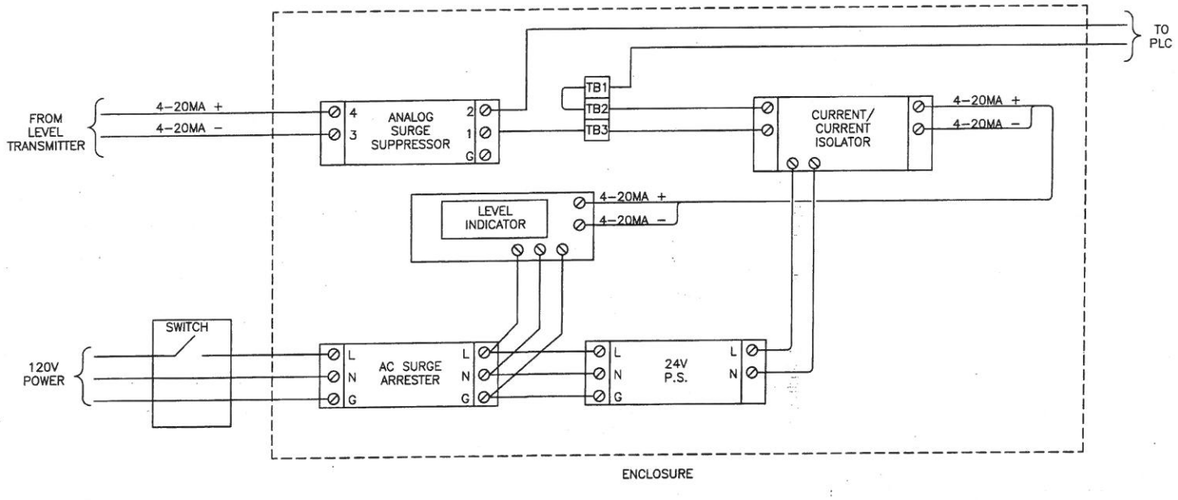

SURGE SUPPRESSOR ENCLOSURE
WITH DISPLAY

SCHEMATIC (1) (–) (TYP. OF 4) (2)

DATE	REVISION	BY
	–	

GAI
Gupta & Associates, Inc.
consulting engineering
Registration No. F-2593
13636 Gamma Road
Dallas, Texas 75244
Tel: 972-490-7661
Fax: 972-490-7125
email: vkg@gaiconsulting.com

STATE OF TEXAS
H. A. FOROUZAN
77748
REGISTERED PROFESSIONAL ENGINEER
03/15/2013

LJA Engineering Inc.
2929 Briarpark Drive
Suite 600
Houston, Texas 77042
Phone 713.953.5200
Fax 713.953.5026
FRN - F-1386

SURVEYED BY: AMANI ENG. | FB NO.: P–5679

CITY OF HOUSTON
DEPARTMENT OF PUBLIC WORKS AND ENGINEERING

ALMEDA SIMS WWTP & SPF IMPROVEMENTS PACKAGE–3

INSTRUMENTATION INSTALLATION DETAILS

WBS NUMBER
R-000298-0008-4
DRAWING SCALE
NTS
CITY OF HOUSTON, PM
IRAJ RANJBAR, P.E.
SHEET NO. 117 OF 117

PUBLIC WORKS AND ENGINEERING
50431
CITY ENGINEER
HOUSTON, TEXAS

DWG: IZ–01

Z:\H614_Houston Almeda Sims WWTP Improvement\Drawings\Instrumentation and Control\Working\IZ-01.dwg